Note: This is a reference cited in *AP 42, Compilation of Air Pollutant Emission Factors, Volume I Stationary Point and Area Sources.* AP42 is located on the EPA web site at www.epa.gov/ttn/chief/ap42/

The file name refers to the reference number, the AP42 chapter and section. The file name "ref02_c01s02.pdf" would mean the reference is from AP42 chapter 1 section 2. The reference may be from a previous version of the section and no longer cited. The primary source should always be checked.

11596

SOURCE TEST AT U.S. STEEL CLAIRTON COKE OVENS

CLAIRTON, PENNSYLVANIA

by

M. W. HARTMAN

Contract No. 68-02-2812
Assignment No. 23

EPA Technical Manager: Gene Riley

Prepared for:

U. S. Environmental Protection Agency
Emission Standards and Engineering Division
Emission Measurements Branch
Research Triangle Park, NC 27711

TRW Environmental Engineering Division
3200 E. Chapel Hill Rd./Nelson Hwy.
P. O. Box 13000
Research Triangle Park, NC 27709

GLOSSARY

BaP - Benz-a-Pyrene
BSO - Benzene Soluble Organics
DSCM - Dry Standard Cubic Meters
GC - Gas Chromatograph
MeCl - Methylene Chloride
MS - Mass Spectrophometer
PAH - Polynuclear Aromatic Hydrocarbons
POM - Polycyclic Organic Matter
SASS - Source Assessment Sampling System

SAMPLE LABELING GLOSSARY

CD - Module Condensate
CICD - Impinger Contents
CIMC - Methylene Chloride Impinger Rinse
MR - Module Rinse Methylene Chloride
NMC - MeCl Nozzle Rinse
NPR - Nozzle Probe/Filter Rinse
P - Combined Probe
PF - Filter
PIB - Probe/Impinger Benzene Rinse
PICD - Probe/Impinger Condensate
PR - Probe/Filter Rinse
V - Vent Rinse
VB - Benzene Vent Rinse
VMC - Vent Rinse Methylene Chloride
XR - XAD-2 Resin

TABLE OF CONTENTS

		PAGE
1.0	INTRODUCTION	1
2.0	SUMMARY	2
3.0	DESCRIPTION OF RESULTS	5
4.0	PROCESS DESCRIPTION	8
5.0	LOCATION OF SAMPLING POINTS	12
6.0	TEST PROCEDURES	14

APPENDIX A: COMPLETE RESULTS AND SAMPLE CALCULATIONS

APPENDIX B: LABORATORY RESULTS

APPENDIX C: FIELD DATA SHEET

APPENDIX D: TEST LOG

APPENDIX E: PROJECT PARTICIPANTS

1.0 INTRODUCTION

During the week of July 30 through August 6, 1978, TRW Environmental Engineering Division, under Contract No. 68-02-2812, with the Environmental Protection Agency's Emission Measurement Branch, tested a battery of coke ovens at U.S. Steel's Clairton, Pennsylvania plant. The purpose of this sampling was two-fold: 1) to provide data associated with emissions of polycyclic organic matter from topside leaks and 2) to verify that a reduction in visible topside emissions would result in an emissions reduction of polycyclic organic material.

Sampling was conducted in order to determine the emission rate (mg/min) of pollutants from a simulated coke oven topside leak; two different size leaks were tested. In addition, background ambient samples were taken from battery topside. The leaks were simulated by modifying an oven port lid to include a vent tube which utilized a ball valve for controlling the leak rate. Samples were collected by placing the nozzle of the sampling train probe directly above the vent tube. Pollution emission rates were determined for Benzene Soluble Organics (BSO), Polycyclic Organic Matter (POM), and Benz-a-Pyrene (BaP); determination of a Benzene emission rate was attempted but was not successful.

2.0 SUMMARY

During the week of testing at the Clairton Coke Works, seven samples of BSO/POM were taken from the simulated oven leaks on Battery Number 1. In addition, two ambient air samples were taken at the battery topside to provide information on the background pollutant level. During each run the simulated leak was adjusted to give either a large leak (approximately a three to six-foot visible plume) or a small leak (approximately a one-foot visible plume). Tests one through four were taken during a large leak while tests five through seven were taken during a small leak. Photographs of the sampling apparatus and the simulated leaks were taken during the test program for EPA by U.S. Steel personnel; these photographs are on file at the EPA. All sampling was done on the number one coke oven battery at the Clairton Plant. In order to minimize problems with taking the sampling equipment onto the hot battery topside, the ovens closest to the pinion wall were selected for testing. In all cases, the oven lid closest to the push side of the battery was used. Sampling was begun between the first and second hours after the oven was charged. The ambient samples were taken on battery topside past the pinion wall (i.e., between oven A-1, and the end of the battery); this position was approximately 40 feet from the simulated leak. A more detailed discussion of the sampling locations is presented in Section 5. A Summary of Results are shown in Table 2.1.

Separate sampling trains were used for the BSO and the POM/BaP sampling. In order to obtain comparable BSO/POM data, a common nozzle was used so that both trains could simultaneously sample the same leak The sampling rates were adjusted so that approximately half of the leak went to each train. Both trains were of a modified Source Assessment Sampling System (SASS); SASS trains were used in order to obtain a high sample rate.

SUMMARY OF RESULTS

					BSO				POM				BAP	
TEST RUN	TEST TIME	DATE	OVEN NUMBER	LEAK SIZE	SAMPLE TIME (min)	MASS COLLECTED (mg)	EMISSION RATE (mg/min)	VOL. SAMPLED (DSCM)	SAMPLE TIME (min)	MASS COLLECTED (mg)	EMISSION RATE (mg/min)	VOL. SAMPLED (DSCM)	MASS COLLECTED (mg)	EMISSION RATE (mg/min)
1	12:50	8/2	A III	Large	24	784	32.68	1.664	30			1.873		
2	14:23	8/2	A I	Large	6	1700	283.33	0.118	9			0.131		
3	8:35	8/3	A V	Large	15	8819	587.93	1.069	15			0.637		
4	10:16	8/3	A VII	Large	8	1618	202.25	0.148	10	2189	218.9	0.404	35.83	3.58
5	12:53	8/4	A II	Small	16	458	28.63	0.672	15			0.823		
6	21:32	8/4	A I	Small	15	714	47.60	0.730	15			0.880		
7	16:45	8/5	A I	Small	15	1312	87.47	0.604	15	511	34.0	0.803	17.91	1.19
5A	12:33	8/4	Ambient	None	56	9.3	0.084	9.988	55			9.608		
5B	21:12	8/4	Ambient	None	55				55					
7A	15:07	8/5	Ambient	None	70	9.0	0.128	6.709	69	7.6	0.11	6.347	0.12	0.0017

5A Collected During Run 5

5B Collected During Run 6

Table 2.1. SUMMARY OF RESULTS

POLYCYCLIC ORGANIC MATERIAL ANALYSES

		BAP 4		BAP 7		BAP 7A	
COMPOUND	MOLECULAR WT.	MASS (mg)	EMISSION RATE (mg/min)	MASS (mg)	EMISSION RATE (mg/min)	MASS (mg)	EMISSION RATE (mg/min)
NAPHTHALENE	128	320.2	32.0	138.8	9.2		
BIPHENYL	154	13.6	1.4	3.1	0.2		
DIMETHYLNAPHTHALENES	156	10.1	1.0	1.6	0.1		
ACENAPHTHYLENE	152	128.8	12.9				
DIBENZOFURAN	168	71.8	7.2				
FLUORENE	166	81.0	8.1	15.4	1.0		
DIMETHYLBIPHENYLS	182	18.3	1.8				
DIBENZOTHIOPHENE	184	21.2	2.1	2.0	0.1		
PHENANTHRENE	178	374.0	37.4	55.2	3.7	3.1	0.045
BENZO(h)QUINOLINE	179	4.4	0.4				
CARBANZOLE	167	44.9	4.5				
METHYLPHENANTHRENE	192	33.8	3.4	4.3	0.3		
4H-CYCLOPENTA (def) PHENANTHRENE	190	32.0	3.2				
PHENYLNAPHTHALENE	204	9.2	0.9				
PYRENE	202	153.8	15.4	31.9	2.1	1.4	0.020
FLUORANTHENE	202	146.2	14.6	30.0	2.0	0.7	0.010
BENZO(a)FLUORENE	216	26.6	2.7	5.9	0.4		
METHYLPYRENES	216	46.2	4.6	10.2	0.7		
BENZO(ghi)FLUORANTHENE	226	9.8	1.0				
CHRYSENE	228	8.5	0.8	65.9	4.4		
BENZO(a)ANTHRACENE	228	150.0	15.0				
TERPHENYL	230	5.4	0.5				
METHYLBENZOANTHRALENES	242	29.4	2.9	10.6	0.7		
BENZOTHIOPHENE	240	18.7	1.9				
BENZOPYRENES	242	296.1	29.6	135.7	9.0		
BENZOPERYLENES	276	109.8	11.0			2.4	0.035
DIBENZOANTHRACENE	278	24.7	2.5				
TOTAL POM		2188.5	218.8	510.6	33.9	7.6	0.110

TABLE 2.2. POM ANALYSIS

The BSO fraction was passed through a dry impinger into a filter at 125°F. The filter and first impinger contents were extracted with benzene; the extract was dried and the BSO determined gravimetrically. The filtered gas flow proceeded through three more impingers containing water and finally through silica gel before being measured at the meter box. The impingers were extracted with benzene which was dried and weighed.

The POM/BaP fraction was collected on a filter at 125°F and a solid adsorbent resin (XAD-2) which were both extracted with methylene chloride (MeCl). The gas then passed through a series of impingers containing water and silica gel before being measured on the gas meter. The recovered water was extracted with MeCl. POM analysis was conducted on a Gas Chromatograph/Mass Spectrometer (GC/MS) - by TRW's West Coast Analytical Department. The BaP analysis was conducted at the EPA's Research Triangle Park location by thin layer chromatography/fluorescence. Only runs 4, 7 and 7A were analyzed for POM/BaP. For the remaining runs the samples were extracted and the extract retained for possible future analysis.

An integrated bag was taken after the filter from the BSO stream. It was analyzed on-site for benzene with a gas chromatograph. The benzene results are missing from this report since it was determined that the high concentrations of the volatile organic matter present in the sample made the determination of benzene impossible. The gas chromatography column utilized in the field on the integrated bag sample did not perform an adequate separation of benzene from the interfering compounds.

3.0 DISCUSSION OF RESULTS

Upon arrival at the plant the van was set up next to the coke ovens. Generators were rented in order to provide power for the SASS trains. The vent pipe was placed on an oven lid. The orifice plate (Section 6) in the vent pipe not only caused a flow restriction but also provided a flat surface on which tar formed a viscous layer resulting in complete plugging of the vent in a short period of time. The orifice plate was removed and a larger steadier flow resulted. All tests were conducted without an orifice plate. Prior to the first run a problem was encountered with plugging of the leak vent which seemed to be caused by particles of coal fines. A new vent was placed on the lid and the first test conducted. Although the leak vent did not totally plug during the test, the flow appeared to be somewhat restricted. The determination was made that this problem of flow restriction due to coal fines would occur only during the first hour of testing, therefore subsequent tests were begun one hour after oven charging. The partial plugging of the vent is reflected in the results. The first test was of longer duration (24 minutes) and collected less mass than the subsequent tests at the large leak rate. The first test was considered an experiment and three more complete tests were conducted. During the sampling the probe nozzle was placed one half inch above the vent outlet to permit visual monitoring of the leak. The observation of the leak assured that plugging of the vent did not occur during the tests runs.

SASS trains were used to collect the sample. The POM/BaP train and the BSO train used a common nozzle which was placed above the simulated leak. After a photograph of the leak was taken, the test was initiated. The pumping rate was adjusted so that each train

sampled an equal amount and the entire leak was captured. The tests were of a short duration due to the plugging of the filters on each train. The runs were discontinued when the filters were overloaded. The flow rates were adjusted by timing the volume and observing the meter orifice pressure differential. This was not an accurate process; therefore, the volumes collected were not exactly equal. The valve that adjusted the leak was a coarse ball valve which only permitted approximately the desired leak rate. The variability in the leak rate accounted for the different sampling times.

The filter was placed on the wrong side of the supporting screen during run 3 in the BSO train. This accounts for the large sampling volume and mass collected. The sample volumes of run 4 disagree by a factor of four. No apparent reason is known for this other than they were both low volumes and this type of variance in flow rate could easily have resulted from the flow approximating method.

Methylene chloride was to have been used as an impinger solvent, however, during the first attempted leak check it was found to be freezing the impingers at the tips and causing plugging. Water was substituted and used in all the tests.

The ambient trains were operated approximately 40 feet away from the oven lids. The ambient test runs were started before the BSO/POM tests and were stopped after the sampling. Duration and volume sampled were greater than the lid leak tests in an attempt to produce a measureable sample.

Immediately following each test the samples were recovered. The recovered samples were transported to TRW's west coast facilities where the splitting, combining, extraction and analysis took place. MeCl was used to rinse the sampling equipment as well as for the extraction of the POM train filter and Resin. The complete results of the GC/MS analysis are contained in Appendix B. Only samples 4, 7 and 7A were analyzed for POM/BaP. The sample splits of these samples were sent to EPA at Research Triangle Park, North Carolina. Where thin layer chromatography /spectroscopy for Benz-a-Pyrene analysis were performed. These results are listed in Appendix B. For all other runs the samples were extracted and the extract retained for possible future analysis.

During testing, an integrated bag was collected from the BSO train after the filter. This bag was analyzed on site for benzene utilizing an OV-101 column on a dual flame ionization detector gas chromatograph. The resulting chromatogram displayed numerous peaks in the retention time frame of benzene. These peaks made it impossible to discern which peak was benzene or if benzene was masked by the interfering peaks. Although different column conditions were attempted, the high concentrations of volatile organic matter present in the sample rendered separation impossible. No benzene results are presented here.

Multiple extractions were performed on the BSO samples (filter) to determine the efficiency of the first and subsequent extractions. The average of the first extractions were 98.8% of the total with the remaining 1.2% present in the second extraction. No weight gains were recorded for the third extraction. Complete results are listed in Appendix B. Multiple extractions with Methylene chloride were conducted on filters and resins for several POM samples in order to determine the efficiency of extraction. The first extraction contained 99.9% of the measurable POMs and the second extract the remaining 0.1%. The third extractions were below detection limits. Furthermore, cyclohexane extractions were conducted on several samples after the MeCl extraction to determine the efficiency of the MeCl extraction. The BaP cyclohexane extractions were below the detection limits.

4.0 PROCESS DESCRIPTION

Battery 1 is one of three batteries (1, 2, 3) of a coke oven operating facility located at the Clairton works. Table 1 lists design parameters of Battery 1.

During the testing, Battery 1 was operated in a normal manner. The average gross coking time was 18 hours. Table 2 lists the production rates for each day of testing. Table 3 lists coal analyses (conducted by U.S. Steel) for each day of testing.

TABLE 1

COKE OVEN BATTERY DESCRIPTION[1]

Type	Wilputte
Number of ovens	64
Date of initial operation	1918
Date of last pad up rebuild	1955
Approximate oven width (average)	18.5 inches
Approximate oven height (floor to roof)	11 feet 10 inches
Approximate oven length (between doors)	37 feet 4 inches
Free space above coal	13 inches
Calculated capacity (cubic foot coal)	626
Charging holes	4 per oven
Charging hole diameter	18 inches
Number of collecting mains	2
Type of oven doors	self-sealing
Type of charging	gravity feed stage charging

[1] Information from letter of September 6, 1974 from John G. Munson, Assistant to Vice President of U.S. Steel, to Reid Iversen, EPA.

TABLE 2

PRODUCT INFORMATION

Date	Ovens Charged Per Day[1]	Gross Coking Time (hrs)
8/1/78	81	19.0
8/2/78	83	18.5
8/3/78	73	21.0
8/4/78	83	18.5
8/5/78	82	18.7
		19.1

[1] Information from letter of September 18, 1978 from R.J. Weiskircher of U.S. Steel to C.E. Riley, U.S. EPA.

TABLE 3: COAL ANALYSIS[1]

	%H_2O	%Sulphur	%Ash	%Volatiles	Screen Size +.500 inch	+.250 inch	+.125 inch	-.125 inch
8/1/78	6.5	1.15	7.45	28.80	4.6	14.8	17.1	63.5
8/2	6.3	1.21	7.75	28.75	3.0	14.9	16.3	65.8
8/3	6.2	1.14	7.65	29.60	4.3	13.6	16.7	65.4
8/4	5.9	1.15	7.80	29.40	5.7	14.2	15.4	64.7
8/5	6.8	1.16	8.25	29.15	4.7	15.0	15.3	65.0

[1] Information from letter of September 18, 1978 from R.J. Weiskircher of U.S. Steel to C.E. Riley, U.S. EPA.

5.0 LOCATION OF SAMPLING POINTS

All sampling points were located on the topside of the number one coke oven battery at the Clairton Works. The oven charging port closest to the push side was chosen for sampling. One end of the oven battery was chosen because it would least disturb the normal operation of the charging trolley. All samples were taken from ovens A_1 through A_7, depending upon the daily charging sequence. The ambient samples were taken from topside at a location past the pinion wall. Figure 5.1 is a schematic of the battery topside indicating the sampling locations.

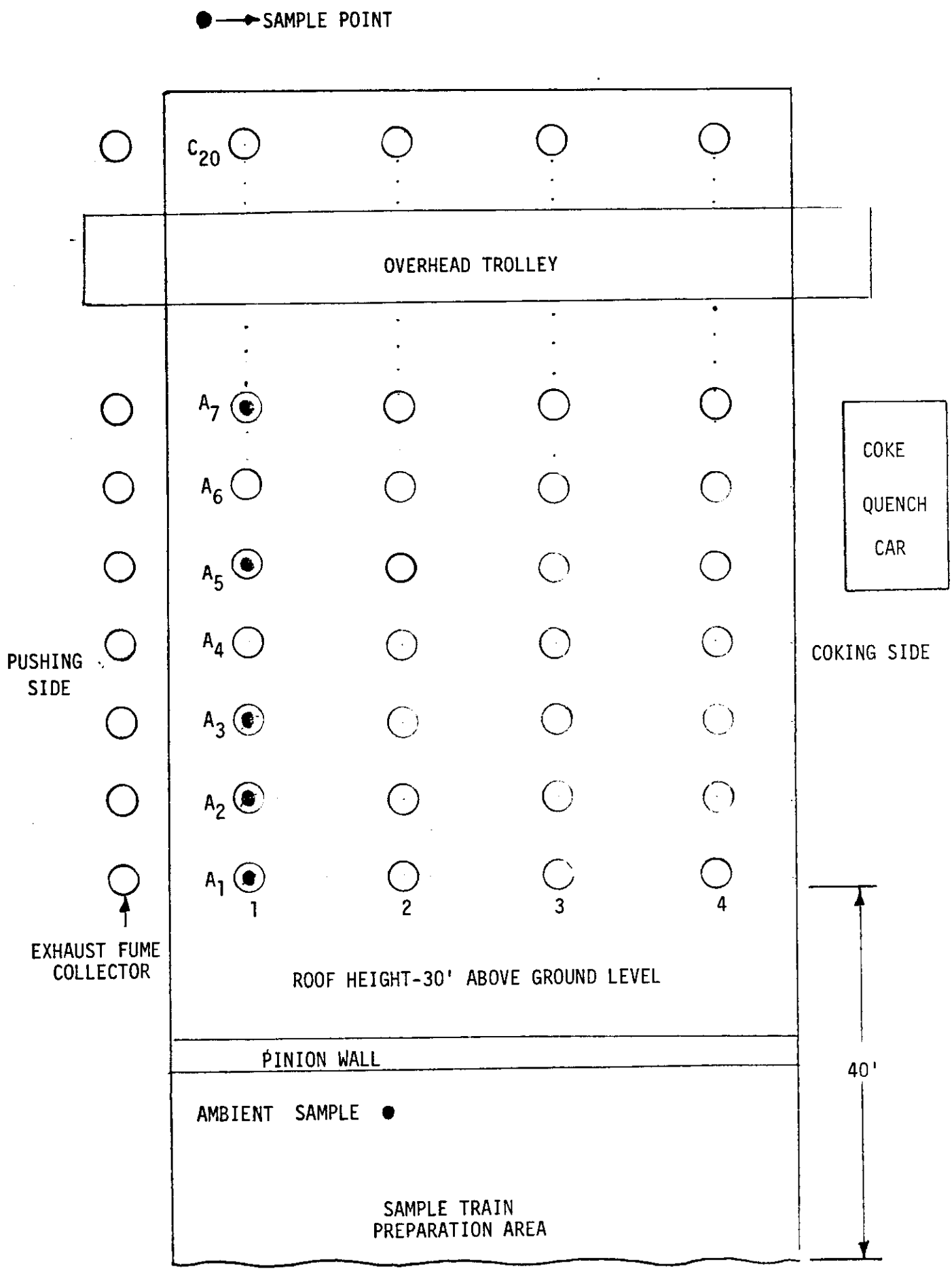

FIGURE 5.1 : BATTERY 1 (TOPSIDE VIEW)

6.0 TEST PROCEDURES

During the testing, the oven was charged with the overhead trolley and the lids replaced and sealed by U.S. Steel personnel; a special lid modified with a valve and vent pipe was replaced on one of the oven ports (see Figure 6.1). After the lids had been sealed, a simulated leak was attempted at the desired plume length. Condensation occurred in the vent forming a viscous substance; consequently, the plume was monitored continuously to assure clogging of the vent did not occur. Once the plume was determined to be the correct size, the nozzle was placed over the vent and the sampling trains were started. During sampling, the vent was visually monitored continuously to assure that the sampling rate was sufficient to assure total capture of the leak. Sampling was continued until plugging in the vent occurred or until the loading on the sample train filter caused an excessive decrease in the sampling rate. The sampling rates of the BSO and POM sampling systems were evenly maintained in order to evenly split the sample between the two trains.

The sampling was conducted in accordance with the draft methods--Determination of Benz-a-Pyrene Emissions from Stationary Sources and Determination of Benzene Soluble Organics. Both of these methods were supplied by EPA and both are draft procedures. Several exceptions to the procedures of these Methods were made. SASS sampling trains were substituted for the regular Method 5 trains and the two sampling trains shared a common nozzle (see Figure 6.2). The ambient air sampling system was a Method 5 train modified to accept the XAD-2 adsorbing module; no nozzle was used for this train. Methylene chloride was not used in the impingers because of a problem in freezing due to the heat loss inherent in volatile organic compounds. This was determined during the first run. Subsequent impinger fractions used water as a collection

medium. Methylene chloride was used for cleanup and extraction of the POM train in lieu of cyclohexane.

The basic sample train components are diagrammed in Figure 6.3. All the components used were standard source assessment sampling system (SASS) parts. A simulated leak was created by the pressure in the oven flowing through the valve to the atmosphere. After visually measuring the leak a nozzle common to both trains was positioned over the leak. The nozzle was not connected but just positioned over the leak. The train's pumps were adjusted to provide approximately half the leak to each sample train. Some excess air was also sampled to insure all of the vent gases were captured. The probe and heated oven were maintained at 125°F for the BaP/POM train while only the probe was heated to 100°F for the BSO train. The BaP/POM train filtered the sample to remove the particulate matter. The non-particulate gases were then collected by passing the gas sample through an XAD-2 absorbent resin maintained at 70-90°F. Cooled impingers and silica gel were used to collect the remaining moisture prior to the pumps and the gas flow meters. The BSO train collected the particulate in the first impinger and on the filter. A dry impinger was placed prior to the filter in order to minimize plugging. During the sampling, an integrated Tedlar bag was taken after the impingers but before the silica gel on the BaP/POM train. A sample identification log is contained in Appendix C. This log lists each sample fraction and the solvent used in clean up and recovery. They are generally shown in the following table. The GC/MS analysis was performed according to the procedures outlined in Analysis of Polynuclear Aromatic Hydrocarbons from Coke Oven Effluents by R. E. Beimar, September, 1978 (EPA report 78-CKO-12). The Column utilized was a Dexel 300 packed column for the separation of POMS!

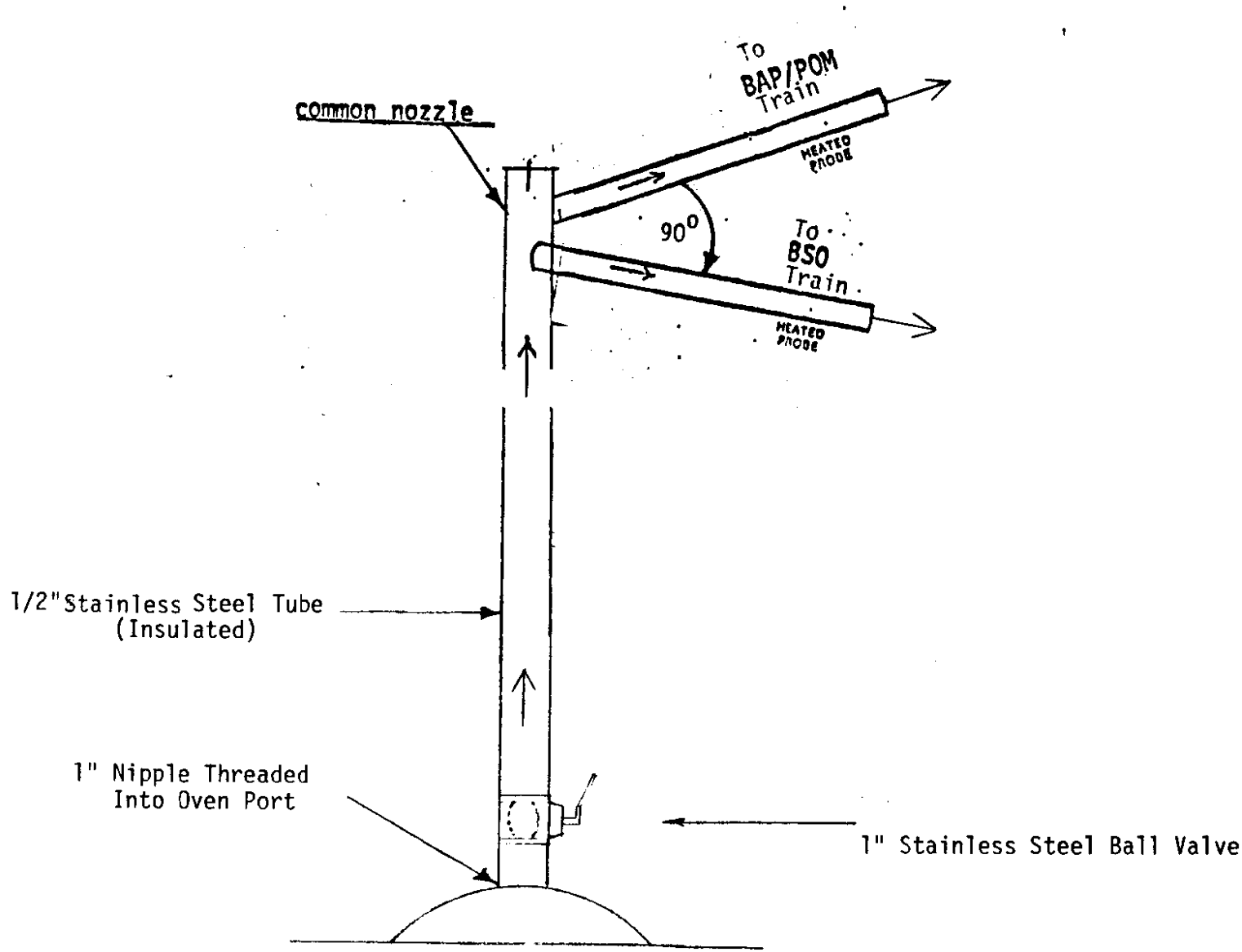

Figure 6.1 Sampling Vent/Probe Configuration

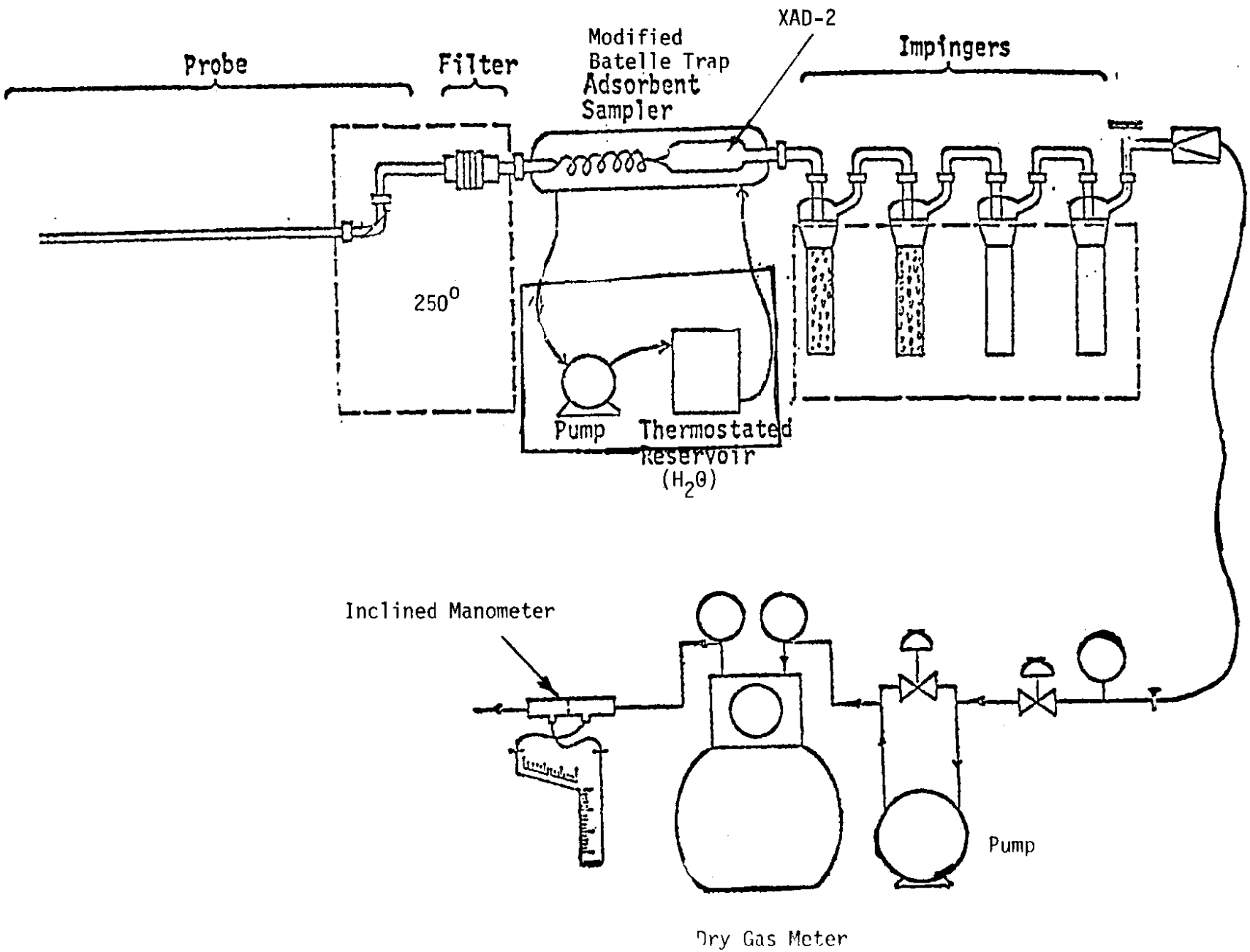

FIGURE 6.2 AMBIENT TRAIN

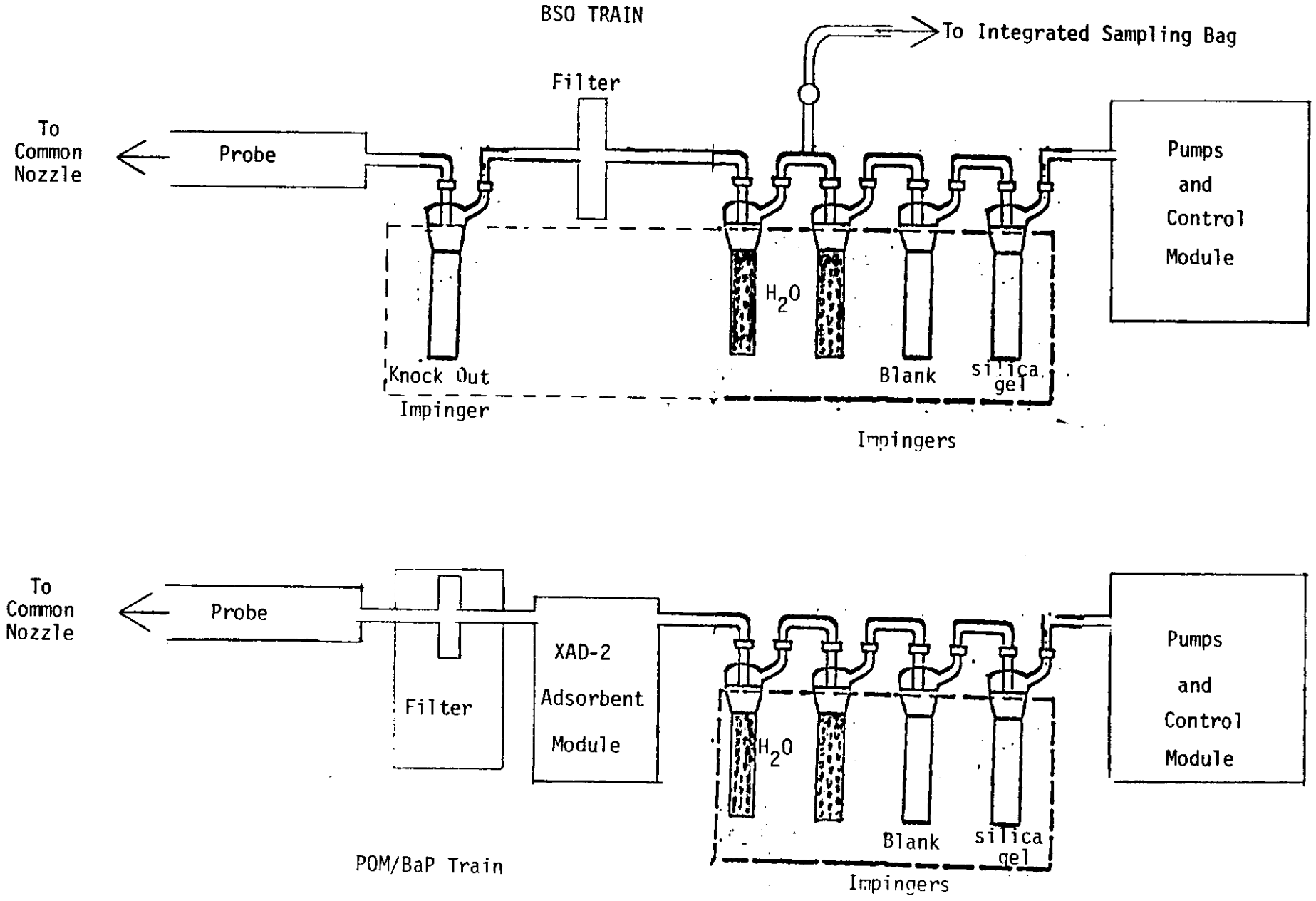

Figure 6-3. SASS SAMPLING TRAINS

Field Recovery of BSO Train

Component	Recovery Steps
Probe, Knock-out Impinger, Filter Housing	Condensate collected Acetone Rinse Benzene Rinse
Filter	Collected
Impingers[1]	Condensate collected Acetone Rinse Benzene Rinse

Field Recovery of BSO/BaP Trains
(Common Components)

Component	Recovery Steps
Vent Pipe	Methylene Chloride Rinse Benzene Rinse
Common Nozzle	Methylene Chloride Rinse Benzene Rinse

Field Recovery of BaP Train

Component	Recovery Steps
Probe, Front of Filter Holder	Methylene Chloride Rinse
Filter	Collected
XAD-2 Resin	Collected
Back of Filter Holder and Module	Condensate Collected Methylene Chloride Rinse
Impingers[1]	Condensate Collected Acetone Rinse Methylene Chloride Rinse

[1]Some Impingers contained activated charcoal which was not recovered after each test. The same is true of the silica gel.

Laboratory Sample Preparation
(BaP/BSO Common Fractions)

1. Nozzle - Methylene Chloride Rinse - Split[1]
   Benzene Rinse - Split[1]

2. Vent - Methylene Chloride Rinse
   Benzene Rinse
   Split (A,B,C)

Laboratory Sample Preparation
(BSO Fractions)

1. Nozzle Benzene Rinse[3], Probe, and Knock-out Impinger Benzene Rinse and Nozzle Methylene Chrloride Fraction[2] Combined and Split[4] (D,E)
2. Probe Knock-out Impinger Acetone Rinse - Split (D,E)
3. Filter Benzene Extraction and Split (D,E)
4. Impinger Liquid - Split (D,E)
5. Impinger Acetone Rinse - Split (D,E)
6. Impinger Benzene Rinse - Split (D,E)
7. Knock-out Impinger Condensate - None in most cases

---

[1]The rinses split in a ratio to correspond to the sampled gas volumes of the BaP/BSO trains for each test.

[2]Nozzle fraction (Methylene Chloride) after being brought to dryness and re-extracted with Benzene.

[3]Nozzle fraction derived from the BaP/BSO common fractions.

[4]The samples were split in half. The "D" fractions were dried and weighted gravimetrically by TRW. The "E" fractions were sent to EPA and from EPA to U. S. Steel.

Laboratory Sample Preparation (continued)
(BaP/POM Sample Fractions)

*1. Nozzle - Methylene Chloride Rinse[5]
Probe Front of Filter Holder Methylene Chloride Rinse — Combined and Split[6] (A,B,C)

*2. Filter - First Methylene Chloride Extraction and Split (A,B,C)
- Second Methylene Chloride Extraction and Split (A,B,C)
- Third Cyclohexane Extraction and Split (A,B,C)

*3. XAD-2 Resin - First Methylene Chloride Extraction and Split (A,B,C)
- Second Methylene Chloride Extraction and Split (A,B,C)
- Third Cyclohexane Chloride Extraction and Split (A,B,C)

*4. Module Condensate - Cyclohexane Extraction and Split (A,B,C)

*5. Module Back of Filter Holder - Methylene Chloride Rinse and Split (A,B,C)

6. Impinger Liquid Cyclohexane Extraction and Split (A,B,C)

7. Impinger Rinse Acetone Rinse
Methylene Chloride Rinse — Combined and Split (A,B,C)

---

[5]From BaP/BSO common fractions.

[6]"A" which was half of the volume was aliquoted and GC/MS'd by TRW (see note *.)
"B" which was a quarter of the volume was sent to EPA.
"C" which was a quarter of the volume was retained.

*Equal aliquots from the "A" fractions of the split for each section of the sampling train were combined, except the samples derived from the impingers, to provide a solution for GC/MS analysis. GC/MS was used for runs BaP4, BaP7, and BaP 7A, the results are reported. Samples from the other runs were kept but not analyzed.

APPENDIX A

COMPLETE RESULTS AND SAMPLE CALCULATIONS

Sample Calculations

Polyclclic Organic Material (Table 2.2)

1. (ex.) Total Weight (mg of Dibenzofuran, Run 4

$$= \frac{45.4\ \mu g}{ml} \times 1582\ ml \times \frac{mg}{1000\ \mu g} = 71.8\ mg$$

Where: $\frac{45.4\ \mu g}{ml}$ = GC/MS Analysis of Composite Sample Fraction of BAP-4 from Smith Report

1582 ml = Total Sample Volume of BAP-4

2. (ex.) Emission Rate (mg/min.) of Dibenzofuran, Run 4

$$= \frac{71.8\ mg}{10\ min.} = 7.18\ mg/min.$$

Where: 71.8 mg = Total Weight of Dibenzofuran

10 min. = Total Run Time

Summary of Results (Table 2.1)

3. (ex.) POM Emission Rate (mg/min), Run 4

$$= \frac{1383.4\ \mu g}{ml} \times \frac{1582\ ml}{10\ min.} = 218.85\ mg/min$$

Where: $\frac{1383.4 \mu g}{ml}$ = Total weight of constituents in BAP-4 Run (see Table 4.1: GC/MS Analysis - Smith Report)

1582 ml = Total Sample Volume of BAP-4 Run

10 min. = Total Run Time of BAP-4

4. (ex.) BAP Emission Rate (mg/min.), Run 4

$$= \frac{35.83\ mg}{10\ min.} = 3.58\ mg/min.$$

Where 35.83 mg = Total mass of fractions from BAP-4 Run (see Clairton Coke Oven Samples Benz-a-Pyrene Analysis - Rogers Report)

10 min = Total Run Time of BAP-4

5. (ex.) BSO Emission Rate (mg/min.) of Run 4

$$= \frac{1.618\ g}{8\ min.} \times \frac{1000\ mg}{g} = 202.25\ mg/min.$$

Where: 1.618 g = Total Mass of BSO-4 fractions from Gravimetric Analysis in Smith's Report:

Sample Calculation (continued)

Fraction	Mass (Grams)
BSO-4-PF (First Filter Extraction)	0.8687
BSO-4-PF (Second Filter Extraction)	0.0108
BSO-4-CICD Impinger Condensate	0.0117
BSO-4-CIA Impinger Acetone Rinse	0.0059
BSO-4-PIA Probe Acetone Rinse	0.7151
BSO-4-CIB Impinger Benzene Rinse	0.0011
BSO-4-PIB Probe Benzene Rinse	0.0047

Total BSO-4 Mass = 1.618 Grams

8 min. = Total run time of BSO-4

WORK SHEET

Volume Sampled

	Vm	Pbar	ΔH	Tm	Vol. Meter SCF
BAP-1	71.781	29.32	.36	104	66.14
BAP-2	5.041	29.32	.10	106	4.62
BAP-3	23.85	29.22	.10	89	22.49
BAP-4	15.274	29.22	.2	94	14.27
BAP-5	30.655	29.30	.25	88	29.07
BAP-6	32.21	29.30	.34	78	31.09
BAP-7	29.47	29.30	.3	80	28.34
BSO-1	64.14	29.32	.7	108	58.74
BSO-2	4.53	29.32	.2	104	4.17
BSO-3	39.98	29.22	.7	89	37.75
BSO-4	5.66	29.22	.2	99	5.24
BSO-5	24.86	29.30	.3	84	23.73
BSO-6	26.60	29.30	.3	76	25.77
BSO-7	22.15	29.30	.3	79	21.34
BSO-5AB	372.102	29.30	1.0	89	352.58
BSO-7A	249.495	29.30	1.0	88	236.84
BAP-5AB	354.043	29.30	1.0	83	339.17
BAP-7A	238.19	29.30	1.0	93	224.06
Formula	17.71 × Vm	$\left(\frac{P_{bar} + \frac{\Delta H}{13.6}}{T_m + 460}\right)$			= Vm std

TECHNICAL DIRECTIVE

PREPARATION OF BAP/POM AND BSO SAMPLES
CLAIRTON COKE WORKS

The attached schedule outlines the specific details of how each sample collected at the Clairton Coke Works is to be prepared and split for analysis. The schedule is detailed as follows:

I. Splitting nozzle/vent samples.
II. Combining nozzle/probe rinse samples for BAP.
III. BAP sample preparation and splitting.
IV. Combining BAP sample fractions.
V. Re-extraction of filter and resin with cyclohexane.
VI. Combining BSO probe/nozzle samples.
VII. Splitting BSO sample fractions.
VIII. List of samples to be sent to EPA for TLC analysis.
IX. List of samples to be sent to EPA for transmittal to U.S. Steel Corp.
X. List of samples for GC/MS analysis.
XI. List of samples for BSO analysis.
XII. List of samples to be retained for possible analysis at a future date.

NOTES:

Prior to conducting this work, blank run analysis were conducted on MeCL, cyclohexane and benzene to assure contamination was not present.

1. Assure that splitting of the samples is done accurately to the indicated fractions since split samples will be recombined before analysis is conducted.

2. Assure that samples are homogeneous prior to splitting. Use ultrasonic agitation if necessary.

3. Prepare POM/BAP samples according to procedures outlined in the draft test method for BAP except that methylene chloride shall be used instead of cyclohexane (filter and solid resin extraction).

4. Prepare and analyze BSO samples according to procedures outlined in the draft test method for benzene soluble organics.

5. Extract filter and resin according to procedures established in the BAP method, paragraph 4.3, except that methylene chloride, in lieu of cyclohexane, is to be used. Split the methylene chloride extract; retain the filter and solid resin for re-extraction with cyclohexane according to the procedures of paragraph 4.3 of the BAP method.

6. Extract the condensate according to the extraction procedures of paragraph 4.3.3. of the BSO test method substituting cyclohexane for benzene. (Do not filter or bring to dryness).

7. Evaporate the sample to dryness and then redissolve the sample residue in benzene. Combine this benzene solution as indicated.

I Splitting Nozzle / Vent Samples

Sample Fraction	Sample Number	Preparation	Splitting	
Benzene Nozzle Rinse	BAP/BSO-1-NB	Agitate	BAP-1-NB	(A/A+B) *
			BSO-1-NB	(B/A+B) *
	BAP/BSO-2-NB		BAP-2-NB	(A/A+B)
			BSO-2-NB	(B/A+B)
	BAP/BSO-3-NB		BAP-3-NB	(A/A+B)
			BSO-3-NB	(B/A+B)
	BAP/BSO-4-NB		BAP-4-NB	(A/A+B)
			BSO-4-NB	(B/A+B)
	BAP/BSO-5-NB		BAP-5-NB	(A/A+B)
			BSO-5-NB	(B/A+B)
	BAP/BSO-6-NB		BAP-6-NB	(A/A+B)
			BSO-6-NB	(B/A+B)
	BAP/BSO-7-NB		BAP-7-NB	(A/A+B)
			BSO-7-NB	(B/A+B)
MeCl2 Nozzle Rinse	BAP/BSO-1-NMC	Agitate	BAP-1-NMC	(A/A+B)
			BSO-1-NMC	(B/A+B)
	BAP/BSO-2-NMC		BAP-2-NMC	(A/A+B)
			BSO-2-NMC	(B/A+B)
	BAP/BSO-3-NMC		BAP-3-NMC	(A/A+B)
			BSO-3-NMC	(B/A+B)
	BAP/BSO-4-NMC		BAP-4-NMC	(A/A+B)
			BSO-4-NMC	(B/A+B)
	BAP/BSO-5-NMC		BAP-5-NMC	(A/A+B)
			BSO-5-NMC	(B/A+B)

* where A = SCF sampled via BAP train for affected run
B = SCF sampled via BSO train for affected run

(I) Splitting Nozzle / Vent Samples (CONT.-2)

SAMPLE FRACTION	SAMPLE NUMBER	PREPARATION	SPLITTING	
$MeCl_2$ Nozzle Rinse	BAP/BSO-6-NMC	Agitate	BAP-6-NMC	(A/A+B)
			BSO-6-NMC	(B/A+B)
	BAP/BSO-7-NMC		BAP-7-NMC	(A/A+B)
			BSO-7-NMC	(B/A+B)
Benzene Vent Rinse	BAP/BSO-3-VB	Agitate	BAP-3-VB	(1/2)
			BSO-3-VB	(1/2)
	BAP/BSO-7-VB		BAP-7-VB	(1/2)
			BSO-7-VB	(1/2)
vent Rinse $MeCl_2$	BAP/BSO-3-VMC	Agitate	BAP-3-VMC-A	(1/4)
			BAP-3-VMC-B	(1/4)
			BSO-3-VMC	(1/2)
	BAP/BSO-7-VMC		BAP-7-VMC-A	(1/4)
			BAP-7-VMC-B	(1/4)
			BSO-7-VMC	(1/2)

(II) Combining Nozzle | Probe Rinse Samples BAP

SAMPLE FRACTIONS	PREPARATION	Combined Sample
BAP-1-NMC		BAP-1-NPR
BAP-1-PR		
BAP-2-NMC		BAP-2-NPR
BAP-2-PR		
BAP-3-NMC		BAP-3-NPR
BAP-3-PR		
BAP-4-NMC		BAP-4-NPR
BAP-4-PR		
BAP-5-NMC		BAP-5-NPR
BAP-5-PR		
BAP-6-NMC		BAP-6-NPR
BAP-6-PR		

(III) BAP Sample Preparation and Splitting

Sample Fraction	Sample Number	Preparation	Splitting	
#1 Probe/filter MC	BAP-1-NPR	– Agitate ↓ – measure volume or dilute to measured volume	BAP-1-NPR-A	(1/2)
" "			BAP-1-NPR-B	(1/4)
			BAP-1-NPR-C	(1/4)
#2 nozzle/Probe/filter MC	BAP-2-NPR		BAP-2-NPR-A	(1/2)
			BAP-2-NPR-B	(1/4)
			BAP-2-NPR-C	(1/4)
#3 nozzle/Probe/filter MC	BAP-3-NPR		BAP-3-NPR-A	(1/2)
			BAP-3-NPR-B	(1/4)
			BAP-3-NPR-C	(1/4)
#4 nozzle/Probe/filter MC	BAP-4-NPR		BAP-4-NPR-A	(1/2)
			BAP-4-NPR-B	(1/4)
			BAP-4-NPR-C	(1/4)
#5 nozzle/Probe/filter	BAP-5-NPR		BAP-5-NPR-A	(1/2)
			BAP-5-NPR-B	(1/4)
			BAP-5-NPR-C	(1/4)
#5AB Probe/filter	BAP-5AB-PR		BAP-5AB-PR-A	(1/2)
			BAP-5AB-PR-B	(1/4)
			BAP-5AB-PR-C	(1/4)
6 nozzle/Probe/filter	BAP-6-NPR		BAP-6-NPR-A	1/2
			BAP-6-NPR-B	(1/4)
			BAP-6-NPR-C	(1/4)

(iii) Sample Splitting - BAP (cont. -2)

Sample Fraction	Sample Number	Preparation	Splitting	
#7- Nozzle Probe/filter	BAP-7-NPR	Agitate	BAP-7-PR-A	(1/2)
			BAP-7-PR-B	(1/4)
			BAP-7-PR-C	(1/4)
#7A Probe/filter	BAP-7A-PR		BAP-7-PR-A	(1/2)
			BAP-7-PR-B	(1/4)
			BAP-7-PR-C	(1/4)
Filter	BAP-1-PF	Extract with Methylene Chloride (See METHod Paragraph 4.3) (See Note #5)	BAP-1-PF-A	(1/2)
			BAP-1-PF-B	(1/4)
			BAP-1-PF-C	(1/4)
Filter	BAP-2-PF		BAP-1-PF-A	(1/2)
			BAP-1-PF-B	(1/4)
			BAP-1-PF-C	(1/4)
Filter	BAP-3-PF		BAP-3-PF-A	(1/2)
			BAP-3-PF-B	(1/4)
			BAP-3-PF-C	(1/4)
Filter	BAP-4-PF		BAP-4-PF-A	(1/2)
			BAP-4-PF-B	(1/4)
			BAP-4-PF-C	(1/4)
Filter	BAP-5-PF		BAP-5-PF-A	(1/2)
			BAP-5-PF-B	(1/4)
			BAP-5-PF-C	(1/4)

(III) Sample Splitting - (BAP (cont.-3)

Sample Fraction	Sample Number	Preparation	Splitting	
Filter	BAP-5AB-PF	Extract with Methylene Chloride	BAP-5AB-PF-A	(1/2)
			BAP-5AB-PF-B	(1/4)
			BAP-5AB-PF-C	(1/4)
	BAP-6-PF		BAP-6-PF-A	(1/2)
			BAP-6-PF-B	(1/4)
			BAP-6-PF-C	(1/4)
	BAP-7-PF		BAP-7-PF-A	(1/2)
			BAP-7-PF-B	(1/4)
			BAP-7-PF-C	(1/4)
	BAP-7A-PF		BAP-7A-PF-A	(1/2)
			BAP-7A-PF-B	(1/4)
			BAP-7A-PF-C	(1/4)
XAD-2 Resin	BAP-1-XR	Extract with Methylene Chloride - SPLIT EXTRACT - (Retain Resin After extraction) See NOTE #5 ↓	BAP-1-XR-A	(1/2)
			BAP-1-XR-B	(1/4)
			BAP-1-XR-C	(1/4)
	BAP-2-XR		BAP-2-XR-A	(1/2)
			BAP-2-XR-B	(1/4)
			BAP-2-XR-C	(1/4)
	BAP-3-XR		BAP-3-XR-A	(1/2)
			BAP-3-XR-B	(1/4)
			BAP-3-XR-C	(1/4)

(III) Sample Splitting – BAP (continued - 4)

Sample	Fraction	Sample number	Preparation	Splitting	
XAD-2	Resin	BAP-4-XR		BAP-4-XR-A	(1/2)
				BAP-4-XR-B	(1/4)
				BAP-4-XR-C	(1/4)
		BAP-5-XR		BAP-5-XR-A	(1/2)
				BAP-5-XR-B	(1/4)
				BAP-5-XR-C	(1/4)
		BAP-5AB-XR		BAP-5AB-XR-A	(1/2)
				BAP-5AB-XR-B	(1/4)
				BAP-5AB-XR-C	(1/4)
		BAP-6-XR		BAP-6-XR-A	(1/2)
				BAP-6-XR-B	(1/4)
				BAP-6-XR-C	(1/4)
		BAP-7-XR		BAP-7-XR-A	(1/2)
				BAP-7-XR-B	(1/4)
				BAP-7-XR-C	(1/4)
		BAP-7A-XR		BAP-7A-XR-A	(1/2)
				BAP-7A-XR-B	(1/4)
				BAP-7A-XR-C	(1/4)
Module	Condensate	BAP-1-CD	extract with cyclohexane & split extract (NOTE 6)	BAP-1-CD-A	(1/2)
				BAP-1-CD-B	(1/4)
				BAP-1-CD-C	(1/4)
		BAP-2-CD		no sample	
		BAP-3-CD		no sample	

(III) Sample Splitting - BAP (continued - 5)

Sample Fraction	Sample Number	Preparation	Splitting
Module Condensate	BAP-4-CD		No Sample
	BAP-5-CD		- combine with BAP-5-MR Before Splitting
	BAP-5AB-CD		- combine with BAP-5AB-MR
	BAP-6A-CD		No Sample
	BAP-7-CD		No Sample
	BAP-7A-CD		No Sample
Module Rinse $MeCl_2$	BAP-1-MR	measure Volume or bring to measured Volume	BAP-1-MR-A (1/2)
			BAP-1-MR-B (1/4)
			BAP-1-MR-C (1/4)
	BAP-2-MR		BAP-2-MR-A (1/2)
			BAP-2-MR-B (1/4)
			BAP-2-MR-C (1/4)
	BAP-3-MR		BAP-3-MR-A (1/2)
			BAP-3-MR-B (1/4)
			BAP-3-MR-C (1/4)
	BAP-4-MR		BAP-4-MR-A (1/2)
			BAP-4-MR-B (1/4)
			BAP-4-MR-C (1/4)
	BAP-5-MR	NOTE: Add BAP-5-CD Before splitting	BAP-5-MR-A (1/2)
			BAP-5-MR-B (1/4)
			BAP-5-MR-C (1/4)
	BAP-5AB-MR	Note: Add BAP-5AB-CD Before Splitting	BAP-5AB-MR-A (1/2)
			BAP-5AB-MR-B (1/4)
			BAP-5AB-MR-C (1/4)

III Sample Splitting - BAP (cont. 6)

Sample Fraction		Sample Number	Preparation	Splitting	
Module	Rinse	BAP-6-MR	Measure Volume	BAP-6-MR-A	(1/2)
				BAP-6-MR-B	(1/4)
				BAP-6-MR-C	(1/4)
		BAP-7-MR		BAP-7-MR-A	(1/2)
				BAP-7-MR-B	(1/4)
				BAP-7-MR-C	(1/4)
		BAP-7A-MR		BAP-7-MR-A	(1/2)
				BAP-7-MR-B	(1/4)
				BAP-7-MR-C	(1/4)
Impinger	Contents	BAP-37CICD	(extract with cyclohexane prior to splitting - split cyclohexane - see note 6)	BAP-37CICD-A	(1/2)
				BAP-37-CICD-B	(1/4)
				BAP-37-CICD-C	1/4
		BAP-57-CICD	same as above	BAP-57A-CICD-A	(1/2)
				BAP-57A-CICD-B	(1/4)
				BAP-57A-CICD-C	(1/4)
MeCl2 Impinger	Rinse	BAP-37-CIMC	Measure Volume of Brine to Measure Volume	BAP-37-CIMC-A	(1/2)
				BAP-37-CIMC-B	(1/4)
				BAP-37-CIMC-C	(1/4)
		BAP-57A-CIMC		BAP-57A-CIMC-A	(1/2)
				BAP-57A-CIMC-B	(1/4)
				BAP-57A-CIMC-C	(1/4)

Combining BAP Sample Fractions

Sample Fractions	Preparation	Combined Sample
BAP-1-NPR-A BAP-1-PF-A		BAP-1-A
BAP-1-XR-A BAP-1-MR-A BAP-1-CD-A		BAP-1-XA
BAP-2-NPR-A BAP-2-PF-A		BAP-2-A
BAP-2-XR-A BAP-2-MR-A		BAP-2-XA
BAP-3-NPR-A BAP-3-PF-A		BAP-3-A
BAP-3-XR-A BAP-3-MR-A		BAP-3-XA
BAP-4-NPR-A BAP-4-PF-A		BAP-4-A
BAP-4-XR-A BAP-4-MR-A		BAP-4-XA
BAP-5-NPR-A BAP-5-PF-A		BAP-5-A

IV Combining BAP Samples (cont. 2)

Sample Fractions	Preparation	Combined Sample
BAP-5-XR-A		BAP-5-XA
BAP-5-MR-A		
BAP-5AB-PR-A		BAP-5AB-A
BAP-5AB-PF-A		
BAP-5AB-XR-A		BAP-5AB-XA
BAP-5AB-MR-A		
BAP-6-NPR-A		BAP-6-A
BAP-6-PF-A		
BAP-6-XR-A		BAP-6-XA
BAP-6-MR-A		
BAP-7-NPR-A		BAP-7-A
BAP-7-PF-A		
BAP-7-XR-A		BAP-7XA
BAP-7-MR-A		
BAP-7A-PR-A		BAP-7A-A
BAP-7A-PF-A		
BAP-7A-XR-A		BAP-7A-XA
BAP-7A-MR-A		

V Reextract Filter and Resin with Cyclohexane - BAP

Sample	Preparation	Final Sample
BAP-1-PF	Take Filter after extraction with $MeCl_2$ and re-extract with Cyclohexane - measure volume See Note 5	BAP-1-PF-CH
BAP-2-PF		BAP-2-PF-CH
BAP-3-PF		BAP-3-PF-CH
BAP-4-PF		BAP-4-PF-CH
BAP-5-PF		BAP-5-PF-CH
BAP-6-PF		BAP-6-PF-CH
BAP-7-PF		BAP-7-PF-CH
BAP-5AB-PF		BAP-5AB-PF-CH
BAP-7A-PF		BAP-7A-PF-CH
BAP-1-XR	Remove Resin after extraction with $MeCl_2$ and Re-extract with cyclohexane - measure volume See Note 5	BAP-1-XR-CH
BAP-2-XR		BAP-2-XR-CH
BAP-3-XR		BAP-3-XR-CH
BAP-4-XR		BAP-4-XR-CH
BAP-5-XR		BAP-5-XR-CH
BAP-6-XR		BAP-6-XR-CH
BAP-7-XR		BAP-7-XR-CH
BAP-5AB-XR		BAP-5AB-XR-CH
BAP-7A-XR		BAP-7A-XR-CH

(VI) Combining BSO Probe/Nozzle Samples

Sample Fraction	Sample Number	Preparation	Combined Sample
Leak Vent Benzene	BSO-3-VB	–	BSO-3-V
Leak Vent MeCL	BSO-3-VMC	Dry, redissolve in Benzene, NOTE #7	
VENT Benzene	BSO-7-VB	–	BSO-7-V
Vent MeCL	BSO-7-VMC	– Same As Above NOTE #7 –	
Nozzle - Benzene	BSO-1-NB	–	BSO-1-P
Nozzle - MeCL	BSO-1-NMC	Dry Redissolve in Benzene NOTE #7	
Probe/Impinger Benzene Rinse	BSO-1-PIB	–	
Probe/Impinger Condensate	BSO-1-PICD		
	BSO-2-NB		BSO-2-P
	BSO-2-NMC	– NOTE #7	
	BSO-2-PIB		
	BSO-3NB		BSO-3-P
	BSO-3-NMC	– NOTE #7	
	BSO-3-PIB		
	BSO-4-NB		BSO-4-P
	BSO-4-NMC	NOTE #7	
	BSO-4-PIB		
	BSO-5-PIB		BSO-5-P.
	BSO-5-NB		
	BSO-5-NMC	NOTE #7	

VI Combine BSO probe/nozzle samples (Cont. 2)

Sample	Fraction	Sample Number	Preparation	Combined Sample
		BSO-5AB-NB		
		BSO-5AB-NMC	NOTE #7	BSO-5AB-P
		BSO-5AB-PIB		
		BSO-6-NB		
		BSO-6-NMC	NOTE #7	BSO-6-P
		BSO-6-PIB		
		BSO-7-NB		
		BSO-7-NMC	NOTE #7	BSO-7-P
		BSO-7-PIB		
		BSO-7A-NB		
		BSO-7A-NMC	NOTE #7	BSO-7A-P
		BSO-7-PIB		

VII Split BSO Sample Fractions

SPLIT The following Samples into two Equal Portions after following the the preparation steps As outlined in The appropriate section of the Test Method.

- Retain one portion of each sample and gravimetrically Determine The BSO content As per method - Fraction "A"
- Send other portion to EPA for transmittal to U.S. Steel - Fraction "B"

A. <u>VENT Rinse</u>

Preparation: Agitate

BSO - 3 - V

BSO - 7 - V

B. Combined Probe, Nozzle, 1st impinger Rinse (Benzene)

Preparation: Agitate

BSO - 1 - P

BSO - 2 - P

BSO - 3 - P

BSO - 4 - P

BSO - 5 - P

BSO - 5AB - P

BSO - 6 - P

BSO - 7 - P

BSO - 7A - P

C. Filter

Preparation: Extract As per Method, split Extracted portion prior to filtration

BSO - 1 - PF

BSO - 2 - PF

BSO - 3 - PF

BSO - 4 - PF

BSO - 5 - PF

BSO - 5AB - PF

BSO - 6 - PF

BSO - 7 - PF

BSO - 7A - PF

possibly split filter paper

VII Split BSO Samples
(Cont-2)

D. Probe, first impinger Rinse (Acetone)
Preparation: Agitate

BSO - 1 - PIA
BSO - 2 - PIA
BSO - 3 - PIA
BSO - 4 - PIA
BSO - 5 - PIA
BSO - 6 - PIA
BSO - 7 - PIA
BSO - 5AB - PIA
BSO - 7A - PIA

& check if Homogeneous

E. Impinger Train Condensate
Preparation: Agitate

BSO - 3 - CICD
BSO - 7 - CICD
BSO - 7A - CICD

F. Impinger Train Acetone Rinse
Preparation: Agitate

BSO - 3 - CIA
BSO - 7 - CIA
BSO - 7A - CIA

G. Impinger Train Benzene Rinse
Preparation: Agitate

BSO - 3 - CIB
BSO - 7 - CIB
BSO - 7A - CIB

H. 1st Impinger Condensate
(Do not split)

BSO - 5AB - CICDX
BSO - 7 - CD
BSO - 7A - CD

VIII Samples Sent to EPA for TLC Analysis (BAP)

Sample	Fraction
BAP-1	-NPR-B
BAP-1	-PF-B
BAP-1	-XR-B
BAP-1	-MR-B
BAP-2	-NPR-B
BAP-2	-PF-B
BAP-2	-XR-B
BAP-2	-MR-B
BAP-3	-NPR-B
BAP-3	-PF-B
BAP-3	-XR-B
BAP-3	-MR-B
BAP-4	-NPR-B
BAP-4	-PF-B
BAP-4	-XR-B
BAP-4	MR-B
BAP-5	-NPR-B
BAP-5	-PF-B
BAP-5	-XR-B
BAP-5	-MR-B
BAP-6	-NPR-B
BAP-6	-PF-B
BAP-6	-XR-B
BAP-6	MR-B
BAP-7	-NPR-B
BAP-7	-PF-B

(VIII) Samples to EPA for TLC Analysis (BAP)
(cont. 2)

BAP-7-XR-B
BAP-7-MR-B
BAP-5AB-PR-B
BAP-5AB-PF-B
BAP-5AB-XR-B
BAP-5AB-MR-B
BAP-7A-PR-B
BAP-7A-PF-B
BAP-7A-XR-B
BAP-7A-MR-B
BAP-3-PF-CH
BAP-3-XR-CH
BAP-7-PF-CH
BAP-7-XR-CH
BAP-7A-PF-CH
BAP-7A-XR-CH
BAP-3-VMC-A
BAP-7-VMC-A
BAP-1-CD-B
BAP-37-CICD-B
BAP-57A-CICD-B
BAP-37-CIMC-B
BAP-57A-CIMC-B

BSO/BAP-MCB-B
BAP/PFB-B
BSO/BAP-XRB-B
BSO/BAP-O-VMCB-B
BSO/BAP-O-NMCB-B
BAP-O-PRB-1B
BAP-O-PRB-2B
BAP-O-MRB-1B
BAP-O-MRB-2B
BSO/BAP-O-MCB-B

(IX) Samples Sent to EPA for transmittal to U.S. Steel (19)

Sample Number	Sample Fraction
BAP-1-NPR-C	RUN #1 - combined nozzle, probe, filter holder Rinse
BAP-1-PF-C	RUN #1 - Filter extract
BAP-1-XR-C	RUN #1 - Resin extract
BAP-1-MR-C	RUN #1 - Resin Module Rinse
BAP-2-NPR-C	RUN #2 - Same fractions as Above
BAP-2-PF-C	
BAP-2-XR-C	
BAP-2-MR-C	
BAP-3-NPR-C	RUN #3
BAP-3-PF-C	
BAP-3-XR-C	
BAP-3-MR-C	
BAP-4-NPR-C	RUN #4
BAP-4-PF-C	
BAP-4-XR-C	
BAP-4-MR-C	
BAP-5-NPR-C	RUN #5
BAP-5-PF-C	
BAP-5-XR-C	
BAP-5-MR-C	
BAP-6-NPR-C	RUN #6
BAP-6-PF-C	
BAP-6-XR-C	
BAP-6-MR-C	
BAP-7-NPR-C	RUN #7
BAP-7-PF-C	

(IX) Samples Sent to EPA for Transmittal to U.S. Steel (cont. 2)

(20)

Sample Number	Sample Fraction
BAP-7-XR-C	
BAP-7-MR-C	
BAP-5AB-PR-C	Run #5/#6 Ambient Sample
BAP-5AB-PF-C	
BAP-5AB-XR-C	
BAP-5AB-MR-C	
BAP-7A-PR-C	Run #7 - Ambient Sample
BAP-7A-PF-C	
BAP-7A-XR-C	
BAP-7A-MR-C	
BAP-3-CD-C	
BAP-3A-CICL-C	
BAP-5A-CICL-C	
BAP-3A-CIMC-C	
BAP-5A-CIMC-C	
BAP-3-VMC-B	
BAP-3-VMC-B	

(X) Samples to be Analyzed for POM By GC/MS (Details of POM analysis to be discussed with Project officer)

Sample Fraction		
BAP - 1 - A	(1)	
BAP - 1 - XA		
BAP - 2 - A	(2)	
BAP - 2 - XA		
BAP - 3 - A	(3)	
BAP - 3 - XA		
BAP - 4 - A	(4)	*
BAP - 4 - XA		
BAP - 5 - A	(5)	
BAP - 5 - XA		
BAP - 6 - A	(6)	
BAP - 6 - XA		
BAP - 7 - A	(7)	*
BAP - 7 - XA		
BAP - SAB - A	(8)	
BAP - SAB - XA		
BAP - 7A - A	(9)	*
BAP - 7A - XA		
BLANKS BAP - 0 - 1	(10)	
BAP - 0 - 2	(11)	
BSO / BAP - MCB - A	(12)	
BAP / PFB - A	(13)	
BSO / BAP - XRB - A	(14)	

* Measure Volume of Prior for Measured Volume Before Analysis

** Remove equal Aliquots from two sample fractions of final run and combine for single Analysis; Nine analyses total -- 1 per run.

XI. Samples for BSO Analysis

Sample Number	Sample Fraction
BSO-3-V	Vent Rinse See Sec. 4.3.5 of BSO Method, (Container 4)
BSO-7-V	
BSO-1-P	Benzene Rinse of impinger, probe, nozzle See Sec. 4.3.5, Container 4
BSO-2-P	
BSO-3-P	
BSO-4-P	
BSO-5-P	
BSO-5AB-P	
BSO-6-P	
BSO-7-P	
BSO-7A-P	
BSO-1-PF	Filter, See Section 4.3.2, Container 1
BSO-2-PF	
BSO-3-PF	
BSO-4-PF	
BSO-5-PF	
BSO-5AB-PF	
BSO-6-PF	
BSO-7-PF	
BSO-7A-PF	
BSO-1-PIA	Acetone Rinse of impinger, probe See Section 4.3.2, Container 3
BSO-2-PIA	
BSO-3-PIA	
BSO-4-PIA	
BSO-5-PIA	
BSO-5AB-PIA	
BSO-6-PIA	

XI. Samples for BSO Analysis

Sample Number	Sample Fraction
BSO-7-PIA	Acetone Rinse of Impinger, Probe
BSO-7A-PIA	
BSO-3-CICD	Impinger Train Condensate See Section 4.3.3 container 2
BSO-7-CICD	
BSO-7A-CICD	
BSO-3-CIA	Impinger Train Acetone Rinse See Section 4.3.4, container 3
BSO-7-CIA	
BSO-7A-CIA	
BSO-3-CIB	Impinger Train Reagent Rinse See Section 4.3.4 container 11
BSO-7-CIB	
BSO-7A-CIB	
BSO-5MB-CICD	1st Impinger Content See Sec. 4.3.3, container 2
BSO-7-CD	
BSO-7A-CD	
BSO-0-PIAB-1	Blank - see Section 4.3.4
BSO-0-PIAB-2	" "
BSO/BAP-AB	"
BSO-0-PIBB-1	Blank see Section 4.3.5
BSO-0-PIBB-2	"
BSO/BAP-BB	" See Section 4.3.5
BSO-BFP	BLANK see Section 4.3.2
BSO/BAP-MCB-C	Blank; Bring to Dryness; Redissolve in Benzene follow procedures of 4.3.5
BSO/BAP-OVBB-A	See Section 4.3.5
BSO/BAP-O-NBB-A	See Section 4.3.5
BSO/BAP-O-VMCB-A	(Blank); Bring to dryness; Redissolve in Benzene; See Section 4.3.5
BSO/BAP-O-NMCB-A	Same as ABOVE

(XII) RETAIN FOR POSSIBLE FUTURE ANALYSIS

SAMPLE Number							
BAP-1-NB							
BAP-2-NB							
BAP-3-NB							
BAP-4-NB							
BAP-[illegible]-NB							
BAP-[illegible]-NB							
BAP-[illegible]-NB							
BAP-1-PF-CH							
BAP-1-XR-CH							
BAP-2-PF-CH							
BAP-2-XR-CH							
BAP-4-PF-CH							
BAP-4-XR-CH							
BAP-5-PF-CH							
BAP-5-XR-CH							
BAP-6-PF-CH							
BAP-6-XR-CH							
BAP-5AB-PF-CH							
BAP-5AB-XR-CH							
BAP/BSO-1-VMC							
BAP/BSO-1-VB							
BAP/BSO-2-VMC							
BAP/BSO-2-VB							
BAP/BSO-4-VMC							
BAP/BSO-4-VB							
BAP/BSO-5-VMC							
BAP/BSO-5-VB							

(XII) Retain for Possible Future Analyses (cont.-2)

	Sample Number								
	BAP/BSO - 6 - VMC								
	BAP/BSO - 6 - VB								
	BAP - 3 - VB								
	BAP - 7 - VB								
*	BAP - 7 - MRA								
*	BAP 37 - CC								
*	BAP - 37 - SE								
*	BAP - 37 - CIA								
*	BAP - 57A - CC								
*	BAP - 57A - SE								
*	BAP - 57A - MRA								
*	BAP - 57A - CIA								
	BAP - 37 - CICD - A								
	BAP - 57A - CICD - A								
	BAP - 37 - CI MT - A								
	BAP - 57A - CI MT - A								
	BSO - 1 - CICD								
	BSO - 2 - CICD								
	BSO - 4 - CICD								
	BSO - 5 - CICD								
	BSO - 5AB - CICD								
	BSO - 6 - CICD								
	BSO - 1 - CIA								
	BSO - 2 - CIA								
	BSO - 4 - CIA								
	BSO - 5 - CIA								
	BSO - 5AB - CIA								

XII Retain for Possible future Analyses (cont. 3)

Sample Number
BSO-6-CIA
BSO-1-CIB
BSO-2-CIB
BSO-4-CIB
BSO-5-CIB
BSO-6-CIB
BSO-37-SG
BSO-7A-SG
BSO-37-CC
BSO-7A-CC
BSO-CIMCB-1
BSO-CIMCB-2
BSO-CIBB-1
BSO-CIBB-2
BSO/BAP-0-MCB-A
BSO/BAP-SGB
BSO/BAP-0-VEB-B
BSO/BAP-0-NBB-B
BAP-0-CIB-1
BAP-0-CIB-2

XIII Sample Blanks

A) Splitting

Sample Number	Preparation	Split
BSO/BAP-MCB	—	BSO/BAP-MCB-A (1/3) BSO/BAP-MCB-B (1/3) BSO/BAP-MCB-C (1/3)
BSO/BAP-PFB	Filter 1 — Filter 2: Extract MeCl/2	BSO/BAP-PFB BAP-PFB-A (1/2) BAP-PFB-B (1/2)
BSO/BAP-SGB	—	—
BSO/BAP-AB	—	—
BSO/BAP-BB	—	—
BSO/BAP-XRB	Extract with MeCL	BSO/BAP-XRB-A (1/2) BSO/BAP-XRB-B (1/2)
BSO/BAP-O-VMCB		BSO/BAP-O-VMCB-A (1/2) BSO/BAP-O-VMCB-B (1/2)
BSO/BAP-O-VBB		BSO/BAP-O-VBB-A (1/2) BSO/BAP-O-VBB-B (1/2)
BSO/BAP-O-NMCB		BSO/BAP-O-NMCB-A (1/2) BSO/BAP-O-NMCB-B (1/2)
BSO/BAP-O-NBB		BSO/BAP-O-NBB-A (1/2) BSO/BAP-O-NBB-B (1/2)
BAP-O-PRB-1		BAP-O-PRB-1A (1/2) BAP-O-PRB-1B (1/2)
BAP-O-PRB-2		BAP-O-PRB-2A (1/2) BAP-O-PRB-2B (1/2)
BAP-O-MRB-1		BAP-O-MRB-1-A (1/2) BAP-O-MRB-1-B (1/2)
BAP-O-MRB-2		BAP-O-MRB-2-A (1/2) BAP-O-MRB-2-B (1/2)
BAP-O-CIB-1		—
BAP-O-CIB-2		—

XIII Sample Blanks (cont. 2)

Sample fraction	Preparation	Split
BSO-0-PIAB-1		—
BSO-0-PIAB-2		—
BSO-0-PIBB-1		—
BSO-0-PIBB-2		—
BSO-C1MCB-1		—
BSO-C1MCB-2		—
BSO-C1BB-1		—
BSO-C1BB-2		—
BSO/BAP-0-MCB		BSO/BAP-0-MCB-A (1/2) BSO/BAP-0-MCB-B (1/2)

(b) Combining Blanks

Sample fractions	Combined Sample
BAP-0-PRB-1A BAP-0-MRB-1A BAP-0-NMCB-A	BAP-0-1
BAP-0-PRB-2A BAP-0-MRB-2A	BAP-0-2

APPENDIX B

LABORATORY RESULTS

BSO RESULTS

Run Number	*Total Mass (GR.)	Meter Volume (DSCF)
BSO-1	0.7843	58.74
BSO-2	1.6997	4.17
BSO-3	8.8190	37.75
BSO-4	1.6180	5.24
BSO-5	0.4578	23.73
BSO-5AB	0.0093	352.58
BSO-6	0.7143	25.77
BSO-7	1.3123	236.84
BSO-7A	0.0090	21.34

*The BSO Grams Total Mass is the sum of the partial masses for the separate runs as presented in Table 2-1 Gravimetric Analysis of the Smith Report.

UNITED STATES ENVIRONMENTAL PROTECTION AGENCY
RESEARCH TRIANGLE PARK, NORTH CAROLINA 27711

DATE: July 25, 1979

SUBJECT: Clairton Coke Oven Samples

FROM: Crystal Rogers, Physical Scientist
SFMCS, PAB, EMD, EMSL/RTP (MD-78)

Crystal H. Rogers

TO: Roy Neulicht
OAQPS, ESED (MD-19)

Attached is the information you requested. If I can be of further assistance, please call.

Attachment

EPA Form 1320-6 (Rev. 3-76)

CLAIRTON COKE OVEN SAMPLES

BENZ-α-PYRENE ANALYSIS

Sample Identification	Sample Volume (ml)	Mass (mg)	BαP ng/ml
4-NPR-B	242	2.546	10,520
4-PF -B	188	7.069	37,600
4-PF2-B	236	0.053	225*
4-XR1-B	166	1.813	10,920
4-XR2-B	180	0.0018	10
4-XR3-B	190		BMD**
4-MR -B	196	24.351	124,240
Total Mass BAP-4 Run		35.834	
7-NPR-B	261	2.777	10,640
7-PF -B	210	15.036	71,600
7-PF2-B	202	0.0485	240
7-XR1-B	176	—	Received Empty
7-XR2-B	194	—	Received Empty
7-XR3-B	196	—	BMD
7-MR -B	548	0.0477	87
Total Mass BAP-7 Run		17.909	
7A-NPR-B	72	0.00518	72
7A-PF -B	190	0.00817	43
7A-PF2-B	224	—	BMD
7A-XR1-B	[illegible]	—	BMD
7A-XR2-B	[illegible]	—	BMD
7A-XR3-B	190	—	BMD
7A-MR -B	464	0.1102	229
Total Mass BAP-7A Run		0.1241	
BSO/BαP MCB-B			BMD
BSO/BαP XRB1-B			BMD
BSO/BαP XRB2-B			BMD
BSO/BαP XRB3-B			BMD

*4-PF2-B was run twice. A 1:1 dilution yielded a result of 225 ng/ml while a 1:200 dilution gave a result of 240 ng BαP/ml.

**BMD = Below Minimum Detection. For this case, less than 10 ng BαP/ml.

$$\text{Mass (mg)} = \text{Sample volume (ml)} \times \text{BαP} \left(\frac{ng}{ml}\right) \times \frac{mg}{1000\,ng}$$

Analysis of U.S. Steel, Clairton Works Samples

Aug. 2, 1979

by
T. R. Smith

TRW
DEFENSE AND SPACE SYSTEMS GROUP

TABLE OF CONTENTS

		Page
1.0	INTRODUCTION	1
2.0	GRAVIMETRIC ANALYSIS	2
3.0	SAMPLE SPLITTING AND COMBINATION	5
4.0	POLYNUCLEAR AROMATIC HYDROCARBONS	8

List of Tables

Number		Page
2-1	Gravimetric Analysis	2
3-1	Sample Volumes	5
4-1	GC/MS Analysis	8

1.0 INTRODUCTION

This report represents the analysis performed on the samples originating from the U.S. Steel, Clairton Works.

Included are the gravimetric analysis results of the benzene soluble organics tests. The volumes of the samples which were split and combined are also presented. GC/MS analysis of several combined samples was also performed and is presented in this report.

2.0 GRAVIMETRIC ANALYSIS

The results of these analyses are compiled in Table 2-1. The samples were handled in the following manner.

Sample Fraction	Sample Designations	BSO Test Method Paragraph
Filter	BSO-X-PF*	4.3.2. (two six hour extractions were performed)
	BSO-X-CICD	4.3.3
	BSO-X-PICD	(cyclohexane was substituted for benzene)
1st Impinger (Acetone)	BSO-X-CIA	4.3.4
Probe (Acetone)	BSO-X-PIA	
1st Impinger (Benzene)	BSO-X-CIB	4.3.5
Probe (Benzene)	BSO-X-PIB	

Table 2-1 GRAVIMETRIC ANALYSIS

Filter Paper	First Extract (grams)	Second Extract (grams)
BSO-1-PF	0.4105	0.0085
BSO-2-PF	1.1766	0.0156
BSO-3-PF	0.4045	0.0014
BSO-4-PF	0.8687	0.0108
BSO-5-PF	0.2209	0.0050
BSO-5AB-PF	0.0005	0.0004
BSO-6-PF	0.2505	0.0041
BSO-7-PF	0.8682	0.0029
BSO-7A-PF	0.0004	0.0004
Combined Impinger Condensate	**(1st Impinger Only) (grams)**	
BSO-2-CICD	0.0106	
BSO-3-CICD	0.0528	
BSO-4-CICD	0.0117	
BSO-5-CICD	0.0013	
BSO-5-CICD2	0.0001	
BSO-5AB-CICD	0.0001	
BSO-6-CICD	0.0054	

* (-X-) Designates sample run number.

Combined Impinger Condensate (continued)

	(grams)	
BSO- 7-CICD	0.0029	
BSO-7A-CICD	0.0019	
BSO-37-CICD	0.0812	
BSO-37A-CICD	0.0142	
BSO-1-PICD	0.0019	- Probe/Impinger Condensate
BSO-6-H_2O	0.0001	

Combined Impinger Rinse/Acetone

	(grams)
BSO-2-CIA	0.1277
BSO-3-CIA	3.4809
BSO-4-CIA	0.0059
BSO-5-CIA	0.0019
BSO-5AB-CIA	0.0013
BSO-6-CIA	0.0015
BSO-7-CIA	0.0090
BSO-7A-CIA	0.0022

Probe/Impinger* Rinse/Acetone

	(grams)
BSO-1-PIA	0.3390
BSO-2-PIA	0.3213
BSO-3-PIA	3.2108
BSO-4-PIA	0.7151
BSO-5-PIA	0.0042
BSO-5AB-PIA	0.0032
BSO-6-PIA	0.4326
BSO-7-PIA	0.4125
BSO-7A-PIA	0.0013
BSO-0-PIAB-1	0.0026
BSO-0-PIAB-2	0.0013

* Impinger = Greenburg/Smith Impinger

Combined Impinger Rinse/Benzene

	(grams)
BSO-1-CIB	0.0002
BSO-2-CIB	0.0017
BSO-3-CIB	1.4625
BSO-4-CIB	0.0011
BSO-5-CIB	0.0031
BSO-5AB-CIB	0.0023
BSO-6-CIB	0.0007
BSO-7-CIB	0.0014
BSO-7A-CIB	0.0017

Probe Impinger Rinse/Benzene

	(grams)
BSO-1-PIB	0.0242
BSO-2-PIB	0.0462
BSO-3-PIB	0.2052
BSO-4-PIB	0.0047
BSO-5-PIB	0.2213
BSO-5AB-PIB	0.0015
BSO-6-PIB	0.0194
BSO-7-PIB	0.0154
BSO-7A-PIB	0.0011

3.0 SAMPLE SPLITTING AND COMBINATION

The samples were split and combined according to technical directive Number 2. A listing of the sample designation and volume is included as Table 3-1.

Table 3-1 Sample Volumes

Sample Designation	Volume (ml)	
BAP-1-NMC (MeCl Nozzle Rinse)	85	
BSO-1-NMC	75	
BAP-2-NMC	58	
BSO-2-NMC	52	
BAP-3-NMC	46	
BSO-3-NMC	78	
BAP-4-NMC	114	
BSO-4-NMC	42	
BAP-5-NMC	18	
BAP-5-NMC	15	
BAP-6-NMC	48	
BSO-6-NMC	39	
BAP-7-NMC	29	
BSO-7-NMC	21	
BAO-1-PR (Probe Rinse)	660	
BAP-2-PR	124	
BAP-3-PR	104	
BAP-4-PR	128	
BAP-5-PR	125	
BAP-6-PR	138	
BAP-7-PR	232	
BAP-5AB-PR	52	
BAP-7A-PR	72	
BAP-1-CD (Module Condensate)	150	
BAP-1-PF1 (Filter)	202	1st extraction
BAP-1-PF2	250	2nd extraction
BAP-1-PF3	138	3rd extraction
BAP-2-PF1	228	

Table 3-1 continued

Sample Designation	Volume (ml)
BAP-5-XR2 (XAD-2 Resin)	196
BAP-5-XR3	190
BAP-5AB-XR1	136
BAP-5AB-XR2	200
BAP-5AB-XR3	184
BAP-6-XR1	120
BAP-6-XR2	188
BAP-6-XR3	200
BAP-7-XR1	176
BAP-7-XR2	194
BAP-7-XR3	196
BAP-7A-XR1	160
BAP-7A-XR2	184
BAP-7A-XR3	190
BAP-1-MR (MeCl Module Rinse)	230
BAP-2-MR	64
BAP-3-MR	328
BAP-4-MR	196
BAP-5-MR	484
BAP-5AB-MR	664
BAP-6-MR	912
BAP-7-MR	548
BAP-7A-MR	484
BAP/BSO-3-VMC (MeCl Vent Rinse)	260
BAP/BSO-7-VMC	136
BAP/BSO-3-VB (Benzene Vent Rinse)	112
BAP/BSO-7-VB	90
BAP-37-CIMC (MeCl Impinger Rinse)	270

Table 3-1 continued

Sample Designation	Volume (ml)
BAP-2-PF2 (Probe Filter)	244
BAP-2-PF3	130
BAP-3-PF1	184
BAP-3-PF2	242
BAP-3-PF3	116
BAP-4-PF1	188
BAP-4-PF2	236
BAP-4-PF3	184
BAP-5-PF1	204
BAP-5-PF2	204
BAP-5-PF3	132
BAP-6-PF1	214
BAP-6-PF2	198
BAP-6-PF3	236
BAP-7-PF1	210
BAP-7-PF2	202
BAP-7-PF3	214
BAP-7A-PF1	190
BAP-7A-PF2	234
BAP-7A-PF3	226
BAP-1-XR1 (XAD-2 Resin)	160 1st extraction
BAP-1-XR2	180 2nd extraction
BAP-1-XR3	180 3rd extraction
BAP-2-XR1	130
BAP-2-XR2	194
BAP-2-XR3	200
BAP-3-XR1	140
BAP-3-XR2	174
BAP-3-XR3	186
BAP-4-XR1	166
BAP-4-XR2	180
BAP-4-XR3	190
BAP-5-XR1	128

4.0 POLYNUCLEAR AROMATIC HYDROCARBONS

The GC/MS analysis was performed according to the procedures used in "Analysis of Polynuclear Aromatic Hydrocarbons from Coke Oven Effluents" by R. G. Beimer, September, 1978 (EPA Report 78-CKO-12). The results are listed in Table 4-1.

Table 4-1 GC/MS Analysis

	M.W.	BAP 4 µg/ml	BAP 7 µg/ml	BAP7A µg/ml
Naphthalene	128	202.4	70.4	
Biphenyl	154	8.6	1.6	
Dimethylnaphthalenes	156	6.4	0.8	
Acenaphthylene	152	81.4		
Dibenzofuran	168	45.4		
Fluorene	166	51.2		
Dimethylbiphenyls	182	11.6		
Dibenzothiophene	184	13.4	1.0	
Phenanthrene	178	236.4	28.0	1.8
Benzo(h)quinoline	179	2.8		
Carbanzole	167	28.4		
Methylphenanthrene	192	21.4	2.2	
4H-Cyclopenta (def)phenanthrene	190	20.2		
Phenylnaphthalene	204	5.8		
Pyrene	202	97.2	16.2	0.8
Fluoranthene	202	92.4	15.2	0.4
Benzo(a)fluorene	216	16.8	3.0	
Methylpyrenes	216	29.2	5.2	
Benzo(ghi)fluoranthene	226	6.2		
Chrysene	228	5.4	33.4	
Benzo(a)anthracene	228	94.8		
Terphenyl	230	3.4		
Methylbenzoanthracenes	242	18.6	5.4	
Benzothiophene	240	11.8		
Benzopyrenes	242	18.72	68.8	
Benzoperylenes	276	69.4		1.4
Dibenzoanthracene	278	15.6		
TOTAL		1383.4	259.0	4.4

APPENDIX C

FIELD DATA SHEETS

BAP-1

PLANT USS STEEL/CLAIRTON SASS FIELD DATA
DATE 8/2/78
SAMPLING LOCATION A-1/BATTERY 1
SOURCE I.D.
RUN NUMBER 1
OPERATOR CARPENTER/HENRY
AMBIENT TEMPERATURE 85°F
BAROMETRIC PRESSURE 29.32
STATIC PRESSURE, (P_s) -1 1/2" H_2O
FILTER NUMBER(S) 197

PROBE LENGTH AND TYPE 5' SS
NOZZLE I.D. 1 1/4"
ASSUMED MOISTURE, % 8
XAD-2 MODULE NUMBER
METER BOX NUMBER 545 OVEN NUMBER
METER $\Delta H_@$
C FACTOR
PROBE HEATER SETTING 250°
OVEN SETTING 250
REFERENCE ΔP

SCHEMATIC OF TRAVERSE POINT LAYOUT
READ AND RECORD ALL DATA EVERY 2 MINUTES

TRAVERSE POINT NUMBER	SAMPLING TIME, MIN	CLOCK TIME (24 HR CLOCK)	GAS METER READING (V_M), FT^3	VELOCITY HEAD (ΔP_s), IN. H_2O	ORIFICE PRESSURE DIFFERENTIAL (ΔH), IN H_2O DESIRED	ORIFICE PRESSURE DIFFERENTIAL (ΔH), IN H_2O ACTUAL	STACK TEMPERATURE (T_s), °F	DRY GAS METER TEMPERATURE INLET ($T_{M_{IN}}$) °F	DRY GAS METER TEMPERATURE OUTLET ($T_{M_{OUT}}$) °F	PUMP VACUUM IN Hg	OVEN TEMPERATURE °F	IMPINGER TEMPERATURE °F	SORBENT TRAP TEMPERATURE °F	PROBE TEMPERATURE °F
	0	1252	815.044											
	2	52	821.95		.80			103	99	11	246	71	81	286
	4	54	827.85		.80			104	99	11	236	* 71	81	283
	6	56	833.05		.80			105	99	13	249	* 81	88	283
	8	58	839.79		.40			106	100	23	↓	78	95	280
	10	1300	843.46		.30			107	100	23		87	95	280
	12	02	848.18		.30			107	100	23		89	91	280
	14	04	852.76		.30			108	100	23	150	91	85	280
	16	06	857.67		.30			108	100	23	153	96	91	278
	18	08	862.26		.30			109	101	23	161	97	90	264
	20	10	866.75		.30			110	101	23	162	99	89	218
	22	12	871.12		.30			110	102	23	158	100	89	197
	24	14	875.01		.20			110	102	23.5	158	101	90	219
	26	16	878.58		.10			109	103	23.5	158	102	93	219
	28	18	882.01		.10			109	104	24	163	103	93	219
	30	20	886.83		.10			109	104	24	163	103	93	219
			71.781		.36			104						
TOTAL		●		●	●	●	●	●	●	●	●	●	●	●
AVERAGE	●	●	●	●	●					●	●	●	●	●

COMMENTS * LOST OVEN HEAT

TRW ENVIRONMENTAL ENGINEERING DIVISION

BAP-2

PLANT U.S. Steel / CLAIRTON
DATE 8/2/78
SAMPLING LOCATION A-5
SOURCE I.D. a
RUN NUMBER
OPERATOR CARPENTER / HENRY
AMBIENT TEMPERATURE 90°F
BAROMETRIC PRESSURE 28.32 - 29.32
STATIC PRESSURE, (Ps)
FILTER NUMBER(S) ~~PA~~ 206

SASS FIELD DATA

PROBE LENGTH AND TYPE 5' SS
NOZZLE I.D. 1/4"
ASSUMED MOISTURE, % 8
XAD-2 MODULE NUMBER
METER BOX NUMBER 545 OVEN NUMBER
METER ΔH@
C FACTOR
PROBE HEATER SETTING 250°
OVEN SETTING 250°
REFERENCE ΔP

SCHEMATIC OF TRAVERSE POINT LAYOUT
READ AND RECORD ALL DATA EVERY 2 MINUTES

TRAVERSE POINT NUMBER	SAMPLING TIME, MIN	CLOCK TIME (24 HR CLOCK)	GAS METER READING (V_M), FT^3	VELOCITY HEAD (ΔP_s) IN. H_2O	ORIFICE PRESSURE DIFFERENTIAL (ΔH), IN H_2O DESIRED	ORIFICE PRESSURE DIFFERENTIAL (ΔH), IN H_2O ACTUAL	STACK TEMPERATURE (T_S), °F	DRY GAS METER TEMPERATURE INLET ($T_{M_{IN}}$) °F	DRY GAS METER TEMPERATURE OUTLET ($T_{M_{OUT}}$) °F	PUMP VACUUM, IN Hg	OVEN TEMPERATURE °F	IMPINGER TEMPERATURE °F	SORBENT TRAP TEMPERATURE °F	PROBE TEMPERATURE °F
	0	1423	886.829											
	2	25	888.72		.10			106	104	20	181	94	78	230
	4	27	889.55		.10			107	105	25	179	90	78	229
	6	29	890.46		.10			107	105	25	179	95	78	235
	8	31	890.71		.10			107	106	25	184	97	76	247
	~~9~~	33	891.87		.10			107	106	25	185	97	76	248
	10													
			5.041					106						
TOTAL		●		●	●	●	●	●	●	●	●	●	●	●
AVERAGE	●	●	●	●	●					●	●	●	●	●

STOP *
START

COMMENTS

* Selica Gel Plugged

TRW ENVIRONMENTAL ENGINEERING DIVISION

LEAK CHECK .1 cu. ft/min

PLANT U.S. Steel CLAIRTON
DATE 8/3/78
SAMPLING LOCATION A-5 OVEN/BATTERY No. 1
SOURCE I.D. ~~B~~ BAP-3
RUN NUMBER
OPERATOR HENRY/CARPENTER
AMBIENT TEMPERATURE ~~[illegible]~~ 21°C
BAROMETRIC PRESSURE 29.22
STATIC PRESSURE, (P_s) -1/2" H_2O
FILTER NUMBER(S) 193

SASS FIELD DATA

PROBE LENGTH AND TYPE 5' SS
NOZZLE I.D. 7/4
ASSUMED MOISTURE, % 8
XAD-2 MODULE NUMBER
METER BOX NUMBER ____ OVEN NUMBER
METER $\Delta H_@$
C FACTOR
PROBE HEATER SETTING 250
OVEN SETTING 250
REFERENCE ΔP

SCHEMATIC OF TRAVERSE POINT LAYOUT
READ AND RECORD ALL DATA EVERY 2 MINUTES

TRAVERSE POINT NUMBER	SAMPLING TIME, MIN	CLOCK TIME (24 HR CLOCK)	GAS METER READING (V_M), FT^3	VELOCITY HEAD (ΔP_S), IN. H_2O	ORIFICE PRESSURE DIFFERENTIAL (ΔH), IN H_2O DESIRED	ORIFICE PRESSURE DIFFERENTIAL (ΔH), IN H_2O ACTUAL	STACK TEMPERATURE (T_S), °F	DRY GAS METER TEMPERATURE INLET ($T_{M_{IN}}$) °F	DRY GAS METER TEMPERATURE OUTLET ($T_{M_{OUT}}$) °F	PUMP VACUUM IN Hg	OVEN TEMPERATURE °F	IMPINGER TEMPERATURE °F	SORBENT TRAP TEMPERATURE °F	PROBE TEMPERATURE °F
	0	836	897.00											
	2	38	901.45		.30			91	85	23	163	68	72	251
	4	40	903.84		.05			91	86	23	163	68	74	245
	6	42	906.58		.05			91	86	24	167	69	74	252
	8	44	910.58		.10			92	86	24	164	69	73	253
	10	46	913.95		.20			93	87	24	169	73	76	249
	12	48	916.58		.05			93	88	24	169	76	74	253
	14	50	919.08		.05			93	88	24	170	79	74	251
	15	51	920.85		.05			93	88	24	171	81	74	254
			23.85					89						
TOTAL		●		●	●	●	●	●	●	●	●	●	●	●
AVERAGE	●	●	●	●	●					●	●	●	●	●

COMMENTS

TRW ENVIRONMENTAL ENGINEERING DIVISION

LEAK Check .06 CFM

PLANT U.S. Steel CLAIRTON
DATE 5/3/78
SAMPLING LOCATION OVEN A-5 BATTERY
SOURCE I.D.
RUN NUMBER BAP-A
OPERATOR HENRY J. CARPENTER
AMBIENT TEMPERATURE 88
BAROMETRIC PRESSURE 29.22
STATIC PRESSURE, (P_s) +1/2" H_2O
FILTER NUMBER(S) 799

SASS FIELD DATA

PROBE LENGTH AND TYPE 5' SS
NOZZLE I.D. 1/4"
ASSUMED MOISTURE, % 8
XAD-2 MODULE NUMBER —
METER BOX NUMBER 545 OVEN NUMBER —
METER $\Delta H_@$
C FACTOR —
PROBE HEATER SETTING 250
OVEN SETTING ~~[illegible]~~ ~~700~~ 250
REFERENCE ΔP

926.125

SCHEMATIC OF TRAVERSE POINT LAYOUT
READ AND RECORD ALL DATA EVERY 2 MINUTES

TRAVERSE POINT NUMBER	SAMPLING TIME, MIN	CLOCK TIME (24 HR CLOCK)	GAS METER READING (V_M), FT^3	VELOCITY HEAD (ΔP_S), IN. H_2O	ORIFICE PRESSURE DIFFERENTIAL (ΔH), IN H_2O DESIRED	ORIFICE PRESSURE DIFFERENTIAL (ΔH), IN H_2O ACTUAL	STACK TEMPERATURE (T_S), °F	DRY GAS METER TEMPERATURE INLET ($T_{M_{IN}}$) °F	DRY GAS METER TEMPERATURE OUTLET ($T_{M_{OUT}}$) °F	PUMP VACUUM IN Hg	OVEN TEMPERATURE °F	IMPINGER TEMPERATURE °F	SORBENT TRAP TEMPERATURE °F	PROBE TEMPERATURE °F
	0	1016	~~[illegible]~~											
	2	18	930.37		.30			95	92	8	187	98	96	330
	4	20	934.67		.30			96	93	19	185	91	99	350
	6	22	937.80		.10			96	93	24	184	93	95	326
	8	24	940.37		0			97	94	25	179	95	100	305
FINAL Reading →	10	26	941.398		0			96	94	25	196	104	93	301
	12													
			15.274		.2			94						
TOTAL		●		●	●	●	●	●	●	●	●	●	●	●
AVERAGE	●	●	●	●	●					●	●	●	●	●

COMMENTS

TRW ENVIRONMENTAL ENGINEERING DIVISION

PLANT USS Clairton
DATE 8/14/78
SAMPLING LOCATION Coke over
SOURCE I.D. BAP-5
RUN NUMBER
OPERATOR HENRY/CARPENTER
AMBIENT TEMPERATURE 85
BAROMETRIC PRESSURE
STATIC PRESSURE, (P_s)
FILTER NUMBER(s)

SASS FIELD DATA

PROBE LENGTH AND TYPE 5' SS
NOZZLE I.D. 7/16
ASSUMED MOISTURE, %
XAD-2 MODULE NUMBER
METER BOX NUMBER OVEN NUMBER
METER ΔH@
C FACTOR
PROBE HEATER SETTING
OVEN SETTING
REFERENCE ΔP

SCHEMATIC OF TRAVERSE POINT LAYOUT
READ AND RECORD ALL DATA EVERY 2 MINUTES

TRAVERSE POINT NUMBER	SAMPLING TIME, MIN	CLOCK TIME (24 HR CLOCK)	GAS METER READING (V_M), FT^3	VELOCITY HEAD (ΔP_s), IN. H_2O	ORIFICE PRESSURE DIFFERENTIAL (ΔH), IN H_2O DESIRED	ORIFICE PRESSURE DIFFERENTIAL (ΔH), IN H_2O ACTUAL	STACK TEMPERATURE (T_s), °F	DRY GAS METER TEMPERATURE INLET ($T_{M_{IN}}$) °F	DRY GAS METER TEMPERATURE OUTLET ($T_{M_{OUT}}$) °F	PUMP VACUUM IN Hg	OVEN TEMPERATURE °F	IMPINGER TEMPERATURE °F	SORBENT TRAP TEMPERATURE °F	PROBE TEMPERATURE °F
	0	1253	782.95											
	2	55	786.01	—	.30	—	—	87	84	4"	314	76	97	226
	4	57	790.33	—	.30	—	—	88	85	10"	314	76	99	286
	6	59	794.27	—	.30	—	—	89	85	11"	315	78	100	294
	8	1301	799.00	—	.30	—	—	90	86	17"	316	80	102	292
	10	03	801.70	—	.20	—	—	92	88	26"	316	82	104	298
	12	05	805.68	—	.20	—	—	93	88	26"	316	84	105	297
	15	08	813.635	—	.20	—	—	94	89	25"	316	85	107	295
			30.685		.25			88						
TOTAL		●	30.685	●	●	●	●	●	●	●	●	●	●	●
AVERAGE	●	●	●	●	●					●	●	●	●	●

COMMENTS

TRW ENVIRONMENTAL ENGINEERING DIVISION

Initial Leak CHECK .095
Final Leak CHECK .15

PLANT USS - Clairton
DATE 8/4/88
SAMPLING LOCATION Coke Oven Vent AS
SOURCE I.D. BAP-6
RUN NUMBER 6
OPERATOR PENKO
AMBIENT TEMPERATURE 88
BAROMETRIC PRESSURE
STATIC PRESSURE, (P_s)
FILTER NUMBER(S)

SASS FIELD DATA

PROBE LENGTH AND TYPE 5' SS
NOZZLE I.D. 1/4
ASSUMED MOISTURE, % 8
MAD-2 MODULE NUMBER
METER BOX NUMBER — OVEN NUMBER —
METER ΔH@ —
C FACTOR —
PROBE HEATER SETTING 230
OVEN SETTING 250
REFERENCE ΔP —

SCHEMATIC OF TRAVERSE POINT layout
READ AND RECORD ALL DATA EVERY 2 MINUTES

TRAVERSE POINT NUMBER	SAMPLING TIME, MIN	CLOCK TIME (24 HR CLOCK) 732	GAS METER READING (V_M), FT^3 814.15	VELOCITY HEAD (ΔP_s), IN. H_2O	ORIFICE PRESSURE DIFFERENTIAL (ΔH), IN H_2O DESIRED	ORIFICE PRESSURE DIFFERENTIAL (ΔH), IN H_2O ACTUAL	STACK TEMPERATURE (T_s), °F	DRY GAS METER TEMPERATURE INLET ($T_{M_{IN}}$) °F	DRY GAS METER TEMPERATURE OUTLET ($T_{M_{OUT}}$) °F	PUMP VACUUM IN Hg	OVEN TEMPERATURE °F	IMPINGER TEMPERATURE °F	SORBENT TRAP TEMPERATURE °F	PROBE TEMPERATURE °F
	2		817.66		.30			76	79	3"	300	72	81	300
	4		821.95		.30			77	78	3.5"	301	69	86	301
	6		826.26		.30			78	78	4"	303	68	90	300
	8		830.53		.30			78	78	4"	304	68	91	300
	10		834.98		.30			78	78	4"	303	69	93	299
	12		838.17		.40			78	78	9"	303	71	94	298
	14		843.84		.40			79	78	11"	302	71	94	297
	16		846.36		.40			78	77	12"	302	72	94	294
			32.21		.34			78						
TOTAL		●		●	●	●	●	●	●	●	●	●	●	●
AVERAGE	●	●	●	●	●					●	●	●	●	●

COMMENTS

TRW

PLANT Clanton
DATE 5-5-78
SAMPLING LOCATION Coke Oven Vent
SOURCE I.D. BAP-7
RUN NUMBER 1
OPERATOR Alvarez
AMBIENT TEMPERATURE
BAROMETRIC PRESSURE
STATIC PRESSURE, (P_s)
FILTER NUMBER(S)

SASS FIELD DATA

PROBE LENGTH AND TYPE
NOZZLE I.D.
ASSUMED MOISTURE, %
XAD-2 MODULE NUMBER
METER BOX NUMBER ____ OVEN NUMBER
METER $\Delta H@$
C FACTOR
PROBE HEATER SETTING
OVEN SETTING
REFERENCE ΔP

SCHEMATIC OF TRAVERSE POINT LAYOUT
READ AND RECORD ALL DATA EVERY 2 MINUTES

TRAVERSE POINT NUMBER	SAMPLING TIME, MIN	CLOCK TIME (24 HR CLOCK) 1645	GAS METER READING (V_M), FT^3 848.22	VELOCITY HEAD (ΔP_s), IN. H_2O	ORIFICE PRESSURE DIFFERENTIAL (ΔH), IN H_2O DESIRED	ACTUAL	STACK TEMPERATURE (T_s), °F	DRY GAS METER TEMPERATURE INLET ($T_{M_{IN}}$)°F	OUTLET ($T_{M_{OUT}}$)°F	PUMP VACUUM IN Hg	OVEN TEMPERATURE °F	IMPINGER TEMPERATURE °F	SORBENT TRAP TEMPERATURE °F	PROBE TEMPERATURE °F
	2	47	853.46		.30			80	79	3	307	72	111	307
	4	49	855.48		.30			79	79	11	305	70	126	304
	6	51	859.55		.30			77	80	17	304	69	129	296
	8	53	863.83		.40			80	79	17	304	68	134	301
	10	55	867.82		.30			79	80	20	303	71	138	295
	12	57	871.33		.30			80	81	25	304	72	132	304
	15	59	877.690		.20			82	81	26	305	74	124	300
			29.47		.3			80						
TOTAL		●		●	●	●	●	●	●	●	●	●	●	●
AVERAGE	●	●	●	●	●					●	●	●	●	●

COMMENTS

TRW

Initial Leak Check .07

AMBIENT

SASS FIELD DATA

PLANT USS Clairton
DATE 5-4-94
SAMPLING LOCATION Coke Oven AI
SOURCE I.D. BAP-AD
RUN NUMBER
OPERATOR HENRY
AMBIENT TEMPERATURE
BAROMETRIC PRESSURE 29.30
STATIC PRESSURE, (P_s)
FILTER NUMBER(S)

PROBE LENGTH AND TYPE 5' SS
NOZZLE I.D. 1/4"
ASSUMED MOISTURE, % 8
MAD-2 MODULE NUMBER
METER BOX NUMBER OVEN NUMBER
METER ΔH@
C FACTOR
PROBE HEATER SETTING
OVEN SETTING
REFERENCE ΔP

SCHEMATIC OF TRAVERSE POINT LAYOUT

READ AND RECORD ALL DATA EVERY ____ MINUTES

	TRAVERSE POINT NUMBER	SAMPLING TIME, MIN	CLOCK TIME (24 HR CLOCK)	GAS METER READING (V_m), FT^3	VELOCITY HEAD (ΔP_s), IN. H_2O	ORIFICE PRESSURE DIFFERENTIAL (ΔH), IN H_2O DESIRED	ORIFICE PRESSURE DIFFERENTIAL (ΔH), IN H_2O ACTUAL	STACK TEMPERATURE (T_s), °F	DRY GAS METER TEMPERATURE INLET ($T_{m_{in}}$) °F	DRY GAS METER TEMPERATURE OUTLET ($T_{m_{out}}$) °F	PUMP VACUUM IN Hg	OVEN TEMPERATURE °F	IMPINGER TEMPERATURE °F	DIGESTIVE TRAP TEMPERATURE °F	PROBE TEMPERATURE °F
			912	366.825			1.						48	76	
START Ambient			20 MIN												
START BAP TEST			932												
			15 MIN												
END BAP TEST			947												
			20 MIN												
END Ambient			1007										43	70	
			~~20 MIN~~												
			55 MIN Total Sampling Time												
				177.0 gauge			1.0 gauge		78						
			FINAL READING	543.425	(APPROXIMATE)										
TOTAL			●		●	●	●	●	●	●	●	●	●	●	●
AVERAGE	●		●	●	●	●					●	●	●	●	●

COMMENTS

TRW

12.40 Ambient Benzene

3.5 CFM

AMBIENT

SASS FIELD DATA

PLANT USS Clairton
DATE 8/4/88
SAMPLING LOCATION Coke Oven
SOURCE I.D. BAP-5A
RUN NUMBER
OPERATOR HENRY / CARPENTER
AMBIENT TEMPERATURE
BAROMETRIC PRESSURE 29.30?
STATIC PRESSURE, (P_s)
FILTER NUMBER(S)

PROBE LENGTH AND TYPE 5' SS
NOZZLE I.D. 1/4"
ASSUMED MOISTURE, % 8
XAD-2 MODULE NUMBER
METER BOX NUMBER OVEN NUMBER
METER ΔH@
C FACTOR
PROBE HEATER SETTING 250
OVEN SETTING 250
REFERENCE ΔP

SCHEMATIC OF TRAVERSE POINT LAYOUT
READ AND RECORD ALL DATA EVERY 2 MINUTES

TRAVERSE POINT NUMBER	SAMPLING TIME, MIN	CLOCK TIME (24 HR CLOCK)	GAS METER READING (V_M), FT^3	VELOCITY HEAD (ΔP_S) IN. H_2O	ORIFICE PRESSURE DIFFERENTIAL (ΔH), IN H_2O DESIRED	ORIFICE PRESSURE DIFFERENTIAL (ΔH), IN H_2O ACTUAL	STACK TEMPERATURE (T_S), °F	DRY GAS METER TEMPERATURE INLET ($T_{M_{IN}}$) °F	DRY GAS METER TEMPERATURE OUTLET ($T_{M_{OUT}}$) °F	PUMP VACUUM IN Hg	OVEN TEMPERATURE °F	IMPINGER TEMPERATURE °F	SORBENT TRAP TEMPERATURE °F	PROBE TEMPERATURE °F
	0	12:33	184.275											
						1.0				8"		51	71°	
		20 min												
Begining of BAP →		12:53												
	15 min													
END of BAP TEST. →		1308												
		20 min												
	1328		361.318									58°	87°	
			177.043			1.0		88?						
TOTAL		●		●	●	●	●	●	●	●	●	●	●	●
AVERAGE	●	●	●	●	●					●	●	●	●	●

COMMENTS

TRW ENVIRONMENTAL ENGINEERING DIVISION

AMBIENT

SASS FIELD DATA

PLANT: Clinton
DATE: 8-5-78
SAMPLING LOCATION:
SOURCE I.D.: BAP-7A
RUN NUMBER: 1
OPERATOR: Henry
AMBIENT TEMPERATURE:
BAROMETRIC PRESSURE:
STATIC PRESSURE, (P_s):
FILTER NUMBER(S):

PROBE LENGTH AND TYPE: 5' SS
NOZZLE I.D.: 1/4"
ASSUMED MOISTURE, %: 8
SAD-2 MODULE NUMBER: — 125°F
METER BOX NUMBER: —
OVEN NUMBER:
METER ΔH@: —
C FACTOR: —
PROBE HEATER SETTING: —
OVEN SETTING: —
REFERENCE ΔP: —

SCHEMATIC OF TRAVERSE POINT LAYOUT

READ AND RECORD ALL DATA EVERY ____ MINUTES

TRAVERSE POINT NUMBER	SAMPLING TIME, MIN	CLOCK TIME (24 HR CLOCK)	GAS METER READING (V_m), FT^3	VELOCITY HEAD (ΔP_s), IN. H_2O	ORIFICE PRESSURE DIFFERENTIAL (ΔH), IN H_2O DESIRED	ORIFICE PRESSURE DIFFERENTIAL (ΔH), IN H_2O ACTUAL	STACK TEMPERATURE (T_s), °F	DRY GAS METER TEMPERATURE INLET ($T_{m_{in}}$), °F	DRY GAS METER TEMPERATURE OUTLET ($T_{m_{out}}$), °F	PUMP VACUUM IN Hg	OVEN TEMPERATURE °F	IMPINGER TEMPERATURE °F	SORBENT TRAP TEMPERATURE °F	PROBE TEMPERATURE °F
	~~12min~~				1.0	—	—	98	86	8	—	70	81	—
1/4"	12min	1513										72	84	
	17		614.12		1.0	—	—	98	86			68	82	
	22	1521	625.65									68	82	
	~~27~~													
	22	1635	628.91		1.0			84	84			82	108	
	27	40	643.42		1.0			89	84			75	126	
	32	45	659.40		1.0			90	84			76	126	
	37	50	676.57		1.0			95	85			80	132	
	42	55	693.35		1.0			97	86			77	134	
	47	1700	712.57		1.0			100	87			75	125	
	52	05	725.90		1.0			102	89			74	109	
	57	10	740.55		1.0			103	89			73	104	
	62	15	756.00		1.0			104	90			78	98	
	67	20	771.05		1.0			105	92			74	97	
	72	25	785.90		1.0			105	93			73	93	
	77	30	801.135		1.0			105	93			74	91	
			↓					↓	↓					
	19min		238.19		1.0			93						
TOTAL		●		●	●	●	●	●	●	●	●	●	●	●
AVERAGE	●	●	●	●	●					●	●	●	●	●

STOP
DOOR LEAK
START

START BAP TEST 1646

END BAP TEST AT 1659

COMMENTS

TRW

BSO-1

PLANT 4 55 Clairton
DATE 8-2-78
SAMPLING LOCATION A-7 Battery 1-Oven A-3
SOURCE I.D.
RUN NUMBER 1
OPERATOR Mr. Reynolds - Waggoner
AMBIENT TEMPERATURE 105
BAROMETRIC PRESSURE 29.37
STATIC PRESSURE, (Ps) -1 in H2O
FILTER NUMBER(S) 192

SASS FIELD DATA

PROBE LENGTH AND TYPE 1' SS elbow
NOZZLE I.D. 1/4
ASSUMED MOISTURE, % 8
XAD-2 MODULE NUMBER
METER BOX NUMBER 1279 OVEN NUMBER
METER ΔH@
C FACTOR
PROBE HEATER SETTING
OVEN SETTING
REFERENCE ΔP

START Leak Rate .065 at 20" Hg

SCHEMATIC OF TRAVERSE POINT LAYOUT
READ AND RECORD ALL DATA EVERY ____ MINUTES

TRAVERSE POINT NUMBER	SAMPLING TIME, MIN	CLOCK TIME (24 HR CLOCK)	GAS METER READING (V_M), FT^3	VELOCITY HEAD (ΔP_S) IN. H_2O	ORIFICE PRESSURE DIFFERENTIAL (ΔH), IN H_2O DESIRED	ORIFICE PRESSURE DIFFERENTIAL (ΔH), IN H_2O ACTUAL	STACK TEMPERATURE (T_S), °F	DRY GAS METER TEMPERATURE INLET ($T_{M_{IN}}$) °F	DRY GAS METER TEMPERATURE OUTLET ($T_{M_{OUT}}$) °F	PUMP VACUUM IN Hg	IMPINGER TEMPERATURE °F	SORBENT TRAP TEMPERATURE °F	PROBE TEMPERATURE °F
	0	1249	286.69										
Battery A3	2	51	~~296.95~~		.8		—	~~105~~		8	106	94	
	4	53	296.95		.6			107	105	8	114	86	
	6	55	—		.8			107	105	8	101	81	
Gas bag start	8	57	307.25		.8			108	105	8	109	81	
Gas bag stop	10	59	—		.8			110	105	10	126	90	
	12	1301	317.95		.8			110	105	10	122	93	
	14	03	323.40		.8			113	106	12	111	100	
	16	05	329.05		.9			114	106	12	127	102	
	18	07	334.45		.8			115	106	12	124	103	
	20	09	340.01		.7			115	106	16	101	103	
	22	11	345.59		.6			115	106	21	100	104	
Coming down	24	1318	350.83		.2			112	107	25	97	102	
	~~26~~	~~15~~											
	~~28~~	~~17~~											
	~~30~~	~~1319~~											
			64.14		.7			108					
TOTAL		●		●	●	●	●	●	●	●	●	●	●
AVERAGE	●	●	●	●	●					●	●	●	●

COMMENTS

TRW ENVIRONMENTAL ENGINEERING

GASS FIELD DATA

PLANT USS Clairton
DATE 8-2-78
SAMPLING LOCATION Rotary Coke
SOURCE I.D.
RUN NUMBER 2
OPERATOR Ms. Reynolds
AMBIENT TEMPERATURE 105
BAROMETRIC PRESSURE 29.32
STATIC PRESSURE, (Ps) -2.5" H2O
FILTER NUMBER(S) 205

B50-2

PROBE LENGTH AND TYPE 1' 90 Elbow
NOZZLE I.D. 1/4"
ASSUMED MOISTURE, % 8
XAD-2 MODULE NUMBER
METER BOX NUMBER 49 OVEN NUMBER
METER ΔH@
C FACTOR
PROBE HEATER SETTING
OVEN SETTING
REFERENCE ΔP

Start Leak Check .065 at 20" Hg

SCHEMATIC OF TRAVERSE POINT LAYOUT

READ AND RECORD ALL DATA EVERY ___ MINUTES

Knock Out Trap

TRAVERSE POINT NUMBER	SAMPLING TIME, MIN	CLOCK TIME (24 HR CLOCK)	GAS METER READING (V_M), FT^3	VELOCITY HEAD (ΔP_S) IN. H_2O	ORIFICE PRESSURE DIFFERENTIAL (ΔH), IN H_2O DESIRED	ORIFICE PRESSURE DIFFERENTIAL (ΔH), IN H_2O ACTUAL	STACK TEMPERATURE (T_S), °F	DRY GAS METER TEMPERATURE INLET ($T_{M_{IN}}$) °F	DRY GAS METER TEMPERATURE OUTLET ($T_{M_{OUT}}$) °F	PUMP VACUUM IN Hg	TEMPERATURE °F	IMPINGER TEMPERATURE °F	SORBENT TRAP TEMPERATURE °F	PROBE TEMPERATURE °F
	0	1423	351.93											
	2	25	355.00		.4			104	104	26	83	101		
	4	27						104	104	27	106	119		
	6.3	29	356.46		.05			104	104	27	100	119		
	8	31												
	10	33												
	12	35												
	14	37												
	16	39												
	18	41												
	20	43												
	22													
	24													
	26		4.53		.2			104						
	28													
	30													
TOTAL														
AVERAGE														

Off

COMMENTS

TRW ENVIRONMENTAL ENGINEERING DIVISION

Run 6

PLANT USS Clairton
DATE 5-4-78
SAMPLING LOCATION Coke oven stack
SOURCE I.D. PSD-6
RUN NUMBER 1
OPERATOR McReynolds
AMBIENT TEMPERATURE 70
BAROMETRIC PRESSURE
STATIC PRESSURE, (P_s) -5" H_2O
FILTER NUMBER(s)

Battery 1 oven A-1

SASS FIELD DATA

PROBE LENGTH AND TYPE 1' SS Elbow
NOZZLE I.D.
ASSUMED MOISTURE, %
XAD-2 MODULE NUMBER
METER BOX NUMBER
METER ΔH@
C FACTOR
PROBE HEATER SETTING
OVEN SETTING
REFERENCE CP

SCHEMATIC OF TRAVERSE POINT LAYOUT
READ AND RECORD ALL DATA EVERY ____ MINUTES

Knock out-tap

TRAVERSE POINT NUMBER	SAMPLING TIME, MIN	CLOCK TIME (24 HR CLOCK)	GAS METER READING (V_M), FT^3	VELOCITY HEAD (ΔP_s), IN. H_2O	ORIFICE PRESSURE DIFFERENTIAL (ΔH), IN H_2O DESIRED	ORIFICE PRESSURE DIFFERENTIAL (ΔH), IN H_2O ACTUAL	STACK TEMPERATURE (T_s), °F	DRY GAS METER TEMPERATURE INLET ($T_{M_{IN}}$) °F	DRY GAS METER TEMPERATURE OUTLET ($T_{M_{OUT}}$) °F	PUMP VACUUM IN Hg	[illegible] °F	IMPINGER TEMPERATURE °F	SORBENT TRAP TEMPERATURE °F	PROBE TEMPERATURE °F
	0	2:15	457.39											
	~~2~~	~~34~~			~~.3~~			~~78~~	~~81~~	~~5~~	~~55~~	~~76~~		
	2	34	—		.3			78	75	8	68	80		
	4	36	464.95		.3			75	76	8	57	68		
	6	38	468.49		.3			76	77	8	57	66		
	8	40	472.20		.3			76	77	8	56	66		
	10	42	476.00		~~.3~~ .4			76	77	8	56	68		
	12	44	478.90		.4			76	77	8	56	69		
	14	46	482.19		.3			76	77	23	56	71		
	15	48	483.99		.2			76	77	25	57	71		
			26.60		.3			76						
TOTAL			26.60											
AVERAGE														

Bag sample

Shutting Down

COMMENTS

TRW

PLANT USS Clairton
DATE 8/4/78
SAMPLING LOCATION Coke oven
SOURCE I.D. BSC - 5
RUN NUMBER 1
OPERATOR Moore
AMBIENT TEMPERATURE
BAROMETRIC PRESSURE
STATIC PRESSURE, (P_s)
FILTER NUMBER(S)

SASS FIELD DATA

PROBE LENGTH AND TYPE
NOZZLE I.D.
ASSUMED MOISTURE, %
XAD-2 MODULE NUMBER
METER BOX NUMBER OVEN NUMBER
METER $\Delta H_@$
C FACTOR
PROBE HEATER SETTING
OVEN SETTING
REFERENCE ΔP

1

SCHEMATIC OF TRAVERSE POINT LAYOUT
READ AND RECORD ALL DATA EVERY ____ MINUTES.

TRAVERSE POINT NUMBER	SAMPLING TIME, MIN	CLOCK TIME (24 HR CLOCK)	GAS METER READING (V_m), FT^3 432.525	VELOCITY HEAD (ΔP_s) IN. H_2O	ORIFICE PRESSURE DIFFERENTIAL (ΔH), IN H_2O DESIRED	ORIFICE PRESSURE DIFFERENTIAL (ΔH), IN H_2O ACTUAL	STACK TEMPERATURE (T_s), °F	DRY GAS METER TEMPERATURE INLET ($T_{M_{IN}}$) °F	DRY GAS METER TEMPERATURE OUTLET ($T_{M_{OUT}}$) °F	PUMP VACUUM IN Hg	Knockout Impinger TEMPERATURE °F (3)	IMPINGER TEMPERATURE °F (4)	SORBENT TRAP TEMPERATURE °F	PROBE TEMPERATURE °F
	0	1253	424.		0.2	0.2		80	80		96	98		
	2	1255	435.700		0.3	0.3		85	82		72	83		
	4	1257	438.885		0.3	0.3		86	82		72	83		
	6	1259	442.322		0.3	0.3		87	83		73	82		
	8	1301	445.52		0.3	0.3		88	83		74	83		
	10	1303	448.71		0.3	0.3		88	82		74	84		
	12	1305	451.92	1"	0.3	0.3		89	84	18	75	85		
	15.7		457.385		0.3	0.3		87	85		77	91		
						↓		↓						
			24.86			0.3		84.5						
TOTAL		●	24.860	●	●	●	●	●	●	●	●	●	●	●
AVERAGE	●	●	●	●	●					●	●	●	●	●

COMMENTS

TRW ENVIRONMENTAL ENGINEERING DIVISION

BSO-3

PLANT U.S.S. Clairton
DATE 8-3-78
SAMPLING LOCATION Battery 1 - Oven A-5
SOURCE I.D.
RUN NUMBER 3
OPERATOR [illegible]
AMBIENT TEMPERATURE 85
BAROMETRIC PRESSURE 29.22
STATIC PRESSURE, (P_s) -.5" H_2O
FILTER NUMBER(S) 195

SASS FIELD DATA

PROBE LENGTH AND TYPE 1' S.S. elbow
NOZZLE I.D. 1/4 common nozzle
ASSUMED MOISTURE, % 8
XAD-2 MODULE NUMBER
METER BOX NUMBER 7124 DGM NUMBER
METER $\Delta H_@$
C FACTOR
PROBE HEATER SETTING
OVEN SETTING
REFERENCE ΔP

Start Leak Check .07

SCHEMATIC OF TRAVERSE POINT LAYOUT
READ AND RECORD ALL DATA EVERY ____ MINUTES

TRAVERSE POINT NUMBER	SAMPLING TIME, MIN	CLOCK TIME (24 HR CLOCK) 0835	GAS METER READING (ACF) 362.40	VELOCITY HEAD (ΔP_s) IN. H_2O	ORIFICE PRESSURE DIFFERENTIAL (ΔH), IN H_2O DESIRED	ACTUAL	STACK TEMPERATURE (T_s), °F	DRY GAS METER TEMPERATURE INLET ($T_{M_{IN}}$) °F	OUTLET ($T_{M_{OUT}}$) °F	PUMP VACUUM IN Hg	TEMPERATURE °F (Knock Out Trap) 98	IMPINGER TEMPERATURE °F 80	SORBENT TRAP TEMPERATURE °F	PROBE TEMPERATURE °F
	2	0837	366.40		.3			86	85	0	~~[illegible]~~ 127			
	4	0839	370.10		.3			89	86	2	103	77		
	6	41	374.85		.8			90	86	5	109	81		
	8	43	381.00		.9			91	87	5	121	90		
	10	45	—		.9			93	88	2	118	93		
	12	47	394.60		.9			93	88	2	125	94		
	14	49	400.09		.9			94	88	2	128	97		
	15	0851	402.38		.9			94	88	2	128	97		
		0.15												
			39.98		.7			89						
TOTAL		●		●	●	●	●	●	●	●	●	●	●	●
AVERAGE	●	●	●	●	●					●	●	●	●	●

Gas bag sample

Filter SN backward.

Final Leak Check

COMMENTS

TRW ENVIRONMENTAL ENGINEERING DIVISION

PLANT USS-Clairton
DATE 8-5-78
SAMPLING LOCATION Coke oven AT
SOURCE I.D. BSO-7
RUN NUMBER
OPERATOR Mr. Reynolds
AMBIENT TEMPERATURE 70
BAROMETRIC PRESSURE
STATIC PRESSURE, (P_s) +.5"
FILTER NUMBER(S)

SASS FIELD DATA

PROBE LENGTH AND TYPE 11' SS Elbow
NOZZLE I.D.
ASSUMED MOISTURE, %
XAD-2 MODULE NUMBER
METER BOX NUMBER OVEN NUMBER
METER $\Delta H_@$
C FACTOR
PROBE HEATER SETTING
OVEN SETTING
REFERENCE ΔP

SCHEMATIC OF TRAVERSE POINT LAYOUT
READ AND RECORD ALL DATA EVERY ____ MINUTES

Rack OEL

TRAVERSE POINT NUMBER	SAMPLING TIME, MIN	CLOCK TIME (24 HR CLOCK)	GAS METER READING (V_M), FT^3	VELOCITY HEAD (ΔP_s) IN. H_2O	ORIFICE PRESSURE DIFFERENTIAL (ΔH), IN H_2O DESIRED	ORIFICE PRESSURE DIFFERENTIAL (ΔH), IN H_2O ACTUAL	STACK TEMPERATURE (T_s), °F	DRY GAS METER TEMPERATURE INLET $(T_{M_{IN}})$ °F	DRY GAS METER TEMPERATURE OUTLET $(T_{M_{OUT}})$ °F	PUMP VACUUM IN Hg	OVEN TEMPERATURE °F	IMPINGER TEMPERATURE °F	SORBENT TRAP TEMPERATURE °F	PROBE TEMPERATURE °F
	0	1645	484.02		.3						78	92		
	2	47	487.40		~~.3~~			80	79	2	~~[illegible]~~	~~[illegible]~~		
	4	49	490.75		.4			79	80	10	65	79		
	6	51	493.95		.4			79	80	12	65	74		
	8	53	497.85		.4			75	80	15	65	74		
	10	55	501.20		.4			79	80	22	67	74		
	12	57	503.70		.2			79	80	25	67	77		
	14	59	505.70		.1			79	80	25	67	78		
	15	1700	506.17		.1			79	80	25	67	78		
			↓											
			22.15		.3			79						
TOTAL		●		●	●	●	●	●	●	●	●	●	●	●
AVERAGE	●	●	●	●	●					●	●	●	●	●

bag sample

COMMENTS

TRW ENVIRONMENTAL ENGINEERING DIVISION

AMBIENT

SASS FIELD DATA

PLANT USS Clairton
DATE 8/4/78
SAMPLING LOCATION Coke oven
SOURCE I.D. 860-5A
RUN NUMBER 1
OPERATOR MOORE
AMBIENT TEMPERATURE
BAROMETRIC PRESSURE 29.30?
STATIC PRESSURE, (P_s)
FILTER NUMBER(S)

PROBE LENGTH AND TYPE
NOZZLE I.D.
ASSUMED MOISTURE, %
XAD-2 MODULE NUMBER
METER BOX NUMBER OVEN NUMBER
METER $\Delta H_@$
C FACTOR
PROBE HEATER SETTING
OVEN SETTING
REFERENCE ΔP

NO HEATED BOX WAS USED FOR AMBIENT TRAIN

SCHEMATIC OF TRAVERSE POINT LAYOUT

READ AND RECORD ALL DATA EVERY ____ MINUTES

TRAVERSE POINT NUMBER	SAMPLING TIME, MIN	CLOCK TIME (24 HR CLOCK)	GAS METER READING (V_M), FT^3	VELOCITY HEAD (ΔP_s) IN. H_2O	ORIFICE PRESSURE DIFFERENTIAL (ΔH) IN H_2O DESIRED	ORIFICE PRESSURE DIFFERENTIAL (ΔH) IN H_2O ACTUAL	STACK TEMPERATURE (T_s), °F	DRY GAS METER TEMPERATURE INLET ($T_{M_{IN}}$) °F	DRY GAS METER TEMPERATURE OUTLET ($T_{M_{OUT}}$) °F	PUMP VACUUM IN Hg	~~BOX~~ KO TEMPERATURE °F (3)	IMPINGER TEMPERATURE °F (5)	SORBENT TRAP TEMPERATURE °F	PROBE TEMPERATURE °F
	0	1231	941.298		1.0	1.0		82	82		81	87		
	2	1233	948.00		1.0	1.0		83	82		72	91		
	4	1235	954.80		1.0	1.0		86	83		70	92		
	6	1237	961.61		1.0	1.0		89	83		70	91		
	14	1245	988.61		1.0	1.0		98	87		70	102		
	26	1257	28.85		1.0	1.0		107	92		72	107		
	40	1311	75.77		1.0	1.0		110	97		78	104		
	56	1327	129.290		1.0	1.0		112	101		82	117		
			187.992			1.0		92						
								89						
TOTAL		●		●	●	●	●	●	●	●	●	●	●	●
AVERAGE	●	●	●	●	●					●	●	●	●	●

COMMENTS

TRW ENVIRONMENTAL ENGINEERING DIVISION

SASS FIELD DATA

PLANT U.S.S. Clairton
DATE 5-3-78
SAMPLING LOCATION Battery I Oven A-7
SOURCE I.D.
BSO-4 RUN NUMBER 4
OPERATOR [illegible]
AMBIENT TEMPERATURE 85
BAROMETRIC PRESSURE 27.22
STATIC PRESSURE, (P_s) +.5
FILTER NUMBER(S) 194

PROBE LENGTH AND TYPE 1' SS Elbow
NOZZLE I.D. 1/4 Common
ASSUMED MOISTURE, % 8
XAD-2 MODULE NUMBER —
METER BOX NUMBER 49 OVEN NUMBER —
METER ΔHe —
C FACTOR —
PROBE HEATER SETTING —
OVEN SETTING —
REFERENCE ΔP —

Start Leak Check .01

SCHEMATIC OF TRAVERSE POINT LAYOUT
READ AND RECORD ALL DATA EVERY ____ MINUTES

Knock Out Imp.

TRAVERSE POINT NUMBER	SAMPLING TIME, MIN	CLOCK TIME (24 HR CLOCK)	GAS METER READING (V_m), FT^3	VELOCITY HEAD (ΔP_s), IN. H_2O	ORIFICE PRESSURE DIFFERENTIAL (ΔH), IN H_2O DESIRED	ORIFICE PRESSURE DIFFERENTIAL (ΔH), IN H_2O ACTUAL	STACK TEMPERATURE (T_s), °F	DRY GAS METER TEMPERATURE INLET ($T_{M_{IN}}$) °F	DRY GAS METER TEMPERATURE OUTLET ($T_{M_{OUT}}$) °F	PUMP VACUUM IN Hg	TEMPERATURE °F	IMPINGER TEMPERATURE °F	SORBENT TRAP TEMPERATURE °F	PROBE TEMPERATURE °F
	0	06	407.50 ~~405.25~~											
	2	18	409.80		.3			95	97	3	118	110		
	4	20	412.72		.3			96	95	15	105	104		
	6	22	413.		.05			96	95	26	100	100		
	8	24	413.16		.05			97	96	27	117	113		
	10	26												
			5.66		.2			96						
TOTAL		●		●	●	●	●	●	●	●	●	●	●	●
AVERAGE	●	●	●	●	●					●	●	●	●	●

shutting down

bag sample

COMMENTS

TRW ENVIRONMENTAL ENGINEERING DIVISION

Run 6

AMBIENT
GAS FIELD DATA

PLANT USS Clairton
DATE 5-4-78
SAMPLING LOCATION Coke Oven AI
SOURCE I.D. BS02 AP
RUN NUMBER
OPERATOR Mark McReynolds
AMBIENT TEMPERATURE 70
BAROMETRIC PRESSURE 29.30 ?
STATIC PRESSURE, (P_s)
FILTER NUMBER(S)

Battery 1 Oven A-1

PROBE LENGTH AND TYPE 6" SS
NOZZLE I.D. N.A.
ASSUMED MOISTURE, % 4
RAD-2 NOZZLE NUMBER
METER BOX NUMBER 52 OVEN NUMBER
METER $\Delta H@$
C FACTOR
PROBE HEATER SETTING
OVEN SETTING
REFERENCE ΔP

NO HEATED BOX (OVEN) WAS USED ON AMBIENT TRAIN

SCHEMATIC OF TRAVERSE POINT LAYOUT
READ AND RECORD ALL DATA EVERY ____ MINUTES

Knock out

TRAVERSE POINT NUMBER	SAMPLING TIME, MIN	CLOCK TIME (24 HR CLOCK) 2/12	GAS METER READING (V_m), FT^3 129.29	VELOCITY HEAD (ΔP_s), IN. H_2O	ORIFICE PRESSURE DIFFERENTIAL (ΔH), IN H_2O DESIRED	ACTUAL	STACK TEMPERATURE (T_s), °F	DRY GAS METER TEMPERATURE INLET ($T_{m_{in}}$) °F	OUTLET ($T_{m_{out}}$) °F	PUMP VACUUM IN Hg	OVEN TEMPERATURE °F	IMPINGER TEMPERATURE °F	SORBENT TRAP TEMPERATURE °F	PROBE TEMPERATURE °F
	5	17	145.80		1.0			78	81	5	55	76		
	10	22	162.35		1.0			82	80	5	63	49		
	15	27	166.40		1.0			87	81	5	62	53		
	20	32	—		1.0			91	83	4	63	57		
	25	37	214.30		1.0			96	84		63	58		
	30	42	231.50		1.0			95	85	4	65	60		
	35	—	—		—			—	—	—	—	—		
	40	52	248.30		1.0			97	87	4	65	56		
	45	57	—		—			—	—	—	—	—		
	50	2202	299.70		1.0			96	87	4	71	54		
	55	07	313.40		1.0			96	87	4	71	54		
			184.11		1.0			87						
TOTAL		●	184.11	●	●	●	●	●	●	●	●	●	●	●
AVERAGE	●	●	●	●	●					●	●	●	●	●

Ambient bag sample 2125

ambient bag sample

COMMENTS

TRW

Ambient

SASS FIELD DATA

PLANT USS - Clairton
DATE 8-5-78
SAMPLING LOCATION Coke oven Pr
SOURCE I.D. B30-7A
RUN NUMBER
OPERATOR M.S. Reynolds
AMBIENT TEMPERATURE 70
BAROMETRIC PRESSURE
STATIC PRESSURE, (Ps) ± .5
FILTER NUMBER(S)

PROBE LENGTH AND TYPE 1' SS
NOZZLE I.D.
ASSUMED MOISTURE, %
XAD-2 MODULE NUMBER
METER BOX NUMBER OVEN NUMBER
METER ΔH@
C FACTOR
PROBE HEATER SETTING
OVEN SETTING
REFERENCE ΔP

NOT HEATED BOX WAS USED ON AMBIENT TRAINS

Knock out

SCHEMATIC OF TRAVERSE POINT LAYOUT

READ AND RECORD ALL DATA EVERY ____ MINUTES

TRAVERSE POINT NUMBER	SAMPLING TIME, MIN	CLOCK TIME (24 HR CLOCK)	GAS METER READING (V_M), FT^3	VELOCITY HEAD (ΔP_s), IN. H_2O	ORIFICE PRESSURE DIFFERENTIAL (ΔH), IN H_2O DESIRED	ORIFICE PRESSURE DIFFERENTIAL (ΔH), IN H_2O ACTUAL	STACK TEMPERATURE (T_s), °F	DRY GAS METER TEMPERATURE INLET ($T_{M_{IN}}$) °F	DRY GAS METER TEMPERATURE OUTLET ($T_{M_{OUT}}$) °F	~~PUMP~~ VACUUM IN Hg	OVEN TEMPERATURE °F	IMPINGER TEMPERATURE °F	SORBENT TRAP TEMPERATURE °F	PROBE TEMPERATURE °F
	0	1507	313.[illegible]0											
	5		337	1.0				79	80	4	84	60		
	10		348.7	1.0				83	80	4	82	61		
	15		360.3	1.0				86	80	4	90	61		
	20	1527	381.66	1.0				92	82	4	100	63		
Stop	~~25~~													
	~~30~~													
Start	~~35~~	1635	381.66	1.0				82	82	4	90	79		
	25	40	398.85	1.0				86	82	4	82	66		
Ambient bag.	30	45	415.40	1.0				90	83	4	82	66		
	35	50	432.00	1.0				94	84	4	81	62		
	40	55	448.35	1.0				97	85	4	82	67		
	45	1700	—	1.0				97	86	4	83	67		
	50	05	481.30	1.0				99	88	4	81	65		
	55	10	496.20	1.0				101	89	4	79	63		
	60	15	514.50	1.0				102	90	4	81	62		
	65	1720	531.00	1.0				101	91	4	81	62		
	70		562.835	1.0										
								88						
			249.495											
TOTAL		●		●	●	●	●	●	●	●	●	●	●	●
AVERAGE	●	●	●	●	●					●	●	●	●	●

COMMENTS

TRW ENVIRONMENTAL ENGINEERING DIVISION

SAMPLE IDENTIFICATION LOG

BAP

SAMPLE ~~EPA~~ Number	~~Sample~~ Location	DATE ~~Run~~	~~Contents~~ SAMPLE	Comments	Collected By
BAP-1-PR	3 ft Plume/oven	8/2	PROBE-filter front	$MeCl_2$ 1 of 2	✓
BAP-1-PF	" "	"	Filter		✓
BAP-1-XR	" "	"	XAD-2 Resin		✓
BAP-1-CD	" "	"	Module Condensate	H_2O	✓
BAP-1-MR	" "	"	Module Rinse (Back Filter)	$MeCl_2$	✓
~~BAP-1-CIR~~	~~" "~~	~~"~~	~~Combined Impinger + Rinses~~	~~$MeCl_2$~~ Dropped	D. Riley
~~BAP-1-SG~~	~~" "~~	~~"~~	~~Silica Gel Impinger~~	"	D. Riley
BAP-2-PR	" "	"	Probe / filter front	$MeCl_2$	✓
" -2-PF	" "	"	Filter		✓
" -2-XR	" "	"	XAD-2 Resin		✓
" -2-CD	" "	"	Module Condensate	H_2O	✓
" -2-MR	" "	"	Module Rinse-filter Back	$MeCl_2$	✓
~~" -2-CIR~~	~~" "~~	~~"~~	~~Combined impinger rinse~~	~~$MeCl_2$ Acetone~~	Dropped GR
~~" -2-SG~~	~~" "~~	~~"~~	~~Silica Gel Impinger~~		
~~" -1-CIMC~~	~~" "~~	~~"~~	~~Combined Impinger MeCl Rinse~~	~~$MeCl_2$~~	Dropped
~~" -2-CIMC~~	~~" "~~	~~"~~	~~" " " "~~	~~"~~	Dropped
BAP-1-PR			Probe Rinse	$MeCl_2$	2 of 2 ✓

Note: Combined impingers at end of ~~3 ft~~ test program

SAMPLE IDENTIFICATION LOG

BAP TEST 3, 4

SAMPLE ~~EPA~~ Number	Sample Location	Run Date	Contents	Comments	Collected By
BAP-3-PR	Coke Oven Vent	8/3	Probe Front filter $MeCl_2$		✓
" -3- PF	"	"	Filter		✓
" -3- XR	"	"	XAD-2 Resin		✓
" -3- CD	"	"	Module Condensate	H_2O	✓
" -3- MR	"	"	Module Rinse (Bxb ½ filter) $MeCl_2$		✓
BAP-4-PR	"	"	Probe front ½ filter $MeCl_2$		✓
" -4- PF	"	"	Filter		✓
" -4- XR	"	"	XAD-2 Resin		✓
" -4- CD	"	"	Module Condensate	H_2O	✓
" -4- MR	"	"	Module Rinse $MeCl_2$		✓

SAMPLE IDENTIFICATION LOG

BSO TEST 5, 6

SAMPLE ~~EPA~~ Number	Sample Location	Run	DATE	Contents	Comments	Collected By
BA1/BSO-5-VMC	Coke Oven Vent	5/4		Vent Pipe MeCl2		DM ✓
" -5-VB	"	"		" Benzene		DM ✓
" -5-NMC	"	"		Nozzle MeCl2		DM ✓
" -5-NB	"	"		" Benzene		DM ✓
BSO-5-PIA	"	"		Probe/Imp Rinse Acetone		DM ✓
" -5-PIB	"	"		" Benzene	Approx 3rd Comb Collection	DM ✓
" -5-PF	"	"		Filter		DM ✓
" -5-CICD	"	"		Combined Impinger Condensate	1 of 2	DM ✓
" -5-CIA	"	"		" " Rinse Acetone		DM ✓
" -5-CIB	"	"		" " " Benzene		DM ✓
" -5-CICD	"			Comb Imp Cond	2 of 2	DM ✓
BA2/BSO-6-VMC	"	"		Vent Pipe MeCl2		✓
" -6-VB	"	"		" " Benzene		✓
" -6-NMC	"	"		Nozzle MeCl2		✓
" -6-NB	"	"		" Benzene		✓
BSO -6-PIA	"	"		Probe/Imp Rinse Acetone		✓
" -6-PIB	"	"		" " Benzene		✓
" -6-PF	"	"		Filter		✓
" -6-CICD	"	"		Combined Imp Condensate		✓
" -6-CIA	"	"		" " Rinse Acetone		✓
" -6-CIB	"	"		" " " Benzene		✓

Note: BSO-5 Cleaned w/ Benzene as first solvent rinse
Benzene OK for first solvent - if H2O condensate present Benzene will leave H2O behind and Acetone will pick it up

SAMPLE IDENTIFICATION LOG

BAP TEST 7 + Ambient 7A

SAMPLE ~~EPA~~ Number	Sample Location	Run DATE	Contents	Comments	Collected By
BAP-7-PR	Coke Oven A2	8/5	Probe Rinse MeCl2		✓
" -7- PF	"	"	Filter		✓
" -7- XR	"	"	XAD-2		✓
" -7- CD	"	"	Module Condensate	None Present	
" -7- MR	"	"	Module Rinse MeCl2		✓
~~" -37- CD~~	~~"~~	~~"~~			
~~" -37- CIAC~~	~~"~~	~~"~~			
~~" -37- CIA~~	~~"~~	~~"~~			
" -37- CC	"	"	Charcoal		✓
" -37- SG	"	"	Silica Gel		✓
" -37- CICD	"	"	Combined Imp Condensate	H_2O	✓
" -37- CIA	"	"	" " Rinse Acetone		✓
" 37- CIMC	"	"	" " - MeCl2		✓
" -7- MRA	"	"	Module Rinse Acetone		✓
BAP-7A-PR	"	"	Probe Rinse MeCl2		✓
" -7A-PF	"	"	Filter		✓
" -7A-XR	"	"	XAD-2		✓
" -7A-CD	"	"	Module Condensate -	None Present	
" -7A-MR	"	"	Module Rinse MeCl2	~~None Present~~ 2 of 2	✓
" -57ACC	"	"	Charcoal		✓
" -57A-SG	"	"	Silica Gel		✓
" -7A-MRA	"	"	Module Rinse Acetone		✓
" -37A-CICD			Combined Imp. Cond.		✓
" -37A-CIA			" " Rinse Acetone		✓
" -37A-CIMC			" " " MeCl2		✓
" -57ACC				1 of 2	

Note: -37- designation is for combined ~~mass~~ test 3 through 7

-57A- " " " Ambient test 5A, 5B & 7

SAMPLE IDENTIFICATION LOG

BSO TEST L2

~~EPA~~ SAMPLE Number	~~Sample~~ Location	~~Run~~ DATE	~~Contents~~ SAMPLE	Comments	Collected By
TP/BSO-1-VMC	COKE OVEN VENT	8/2	Vent Pipe	MeCl₂	DM ✓
" -1-VB	" " "	"	" "	Benzene	" ✓
" -1-NMC	" " "	"	Common Nozzle	MeCl₂	" ✓
" -1-NB	" " "	"	" "	Benzene	" ✓
BSO-1-PICD	" " "	"	PROBE/IMPINGER Condensate	(H_2O)	" ✓
" -1-PIA	" " "	"	" " Rinse	Acetone	"
" -1-PIB	" " "	"	" " "	Benzene	DM ✓
" -1-PF	" " "	"	Filter		DM ✓
" -1-CICDAR	" " "	"	Combined Impinger condensate + Rinse	Acetone ~~MeCl₂~~	DM ✓
" -1-CIB	" " "	"	Combined Impinger Rinse	Benzene	" ✓
" -1-SG	" " "	"	Silica Gel	(NOT COLLECTED)	
" -2-PICD	" " "	"	Probe/Impinger Condensate	(None Collected)	D.M.
" -2-PIA	" " "	"	" " Rinse	Acetone	JMcR ✓
" -2-PIB	" " "	"	" " "	Benzene	" ✓
" -2-PF	" " "	"	Filter		" ✓
~~" -2-CICDAR~~	~~" " "~~	~~"~~	~~COMBINED IMPINGER CONDENSATE + RINSES~~	~~MeCl₂~~	See below
" -2-CIB	" " "	"	" " RINSE	BENZENE	JMcR ✓
~~" -2-SG~~	~~" " "~~	~~"~~	~~Silica Gel~~		dropped GR
BSO-2-VMC	" " "	"	Vent Pipe	MeCl₂	J.McR ✓
BSO-2-VB	" " "	"	" "	Benzene	" ✓
" -2-NMC	" " "	"	Nozzle	MeCl₂	" ✓
" -2-NB	" " "	"	"	Benzene	" ✓
TSO-1-PIA	" " "	"	Probe Imp Rinse	Acetone	DM 20/21
" -1-CIMCR	" " "	"	Combined Impinger Rinse	MeCl₂	DM ✓
" -2-CICD	" " "	"	" " Condensate	No Rinse (H_2O)	JMcR ✓
" -2-CIA	" " "	"	" " Rinse	Acetone	JMcR ✓

Note: Back Up filter holder only rinsed w MeCl₂ + Benzene No Acetone DM

SAMPLE IDENTIFICATION LOG

BSO – TEST 3, 4

SAMPLE ~~EPA~~ Number	Sample Location	Run DATE	Contents (SAMPLE)	Comments	Collected By
BAP/BSO-3-VMC	Coke Oven Vent	8/3	Vent Pipe MeCl2		✓
" -3-VB	"	"	" Benzene		✓
" -3-NMC	"	"	Nozzle MeCl2		✓
" -3-NB	"	"	" Benzene		✓
BSO-3-PIA	"	"	Probe/Imp Rinse Acetone		✓ 1 of 2
" -3-PIB	"	"	" Benzene		✓
" -3-PF	"	"	Filter		✓
" -3-CICD	"	"	Combined Imp. Condensate (H_2O)		✓
" -3-CIA	"	"	" Rinse Acetone		✓ 2 of 2
" -3-CIB	"	"	" " Benzene		✓
" -123-Charcoal	"	"	Charcoal	2 of 2	✓
" -3-CIA	"	Combined	~~Probe~~/Imp Rinse Acetone		1 of 2
" -3-PIA	"	"	Probe " Acetone	2 of 2	✓
" -123-Charcoal		"	Charcoal	1 of 2	✓
BAP/BSO-4-VMC	"	"	Vent Pipe MeCl2		✓
" -4-VB	"	"	" Benzene		✓
" -4-NMC	"	"	Nozzle MeCl2		✓
" -4-NB	"	"	" Benzene		✓
BSO-4-PIA	"	"	Probe/Imp. Rinse Acetone		✓
" -4-PIB	"	"	" " Benzene		✓
" -4-PF	"	"	Filter		✓
" -4-CICD	"	"	Combined Impinger Condensate	(H_2O)	✓
" -4-CIA	"	"	" " Acetone		✓
" -4-CIB	"	"	" " Benzene		✓

TRW

ACCOUNTABILITY LOG

CLIENT EPA LOCATION USS Clairton

TYPE SAMPLE(S) Coke Oven Vent Leaks

REMARKS:

DATE/TIME	~~MASTER~~ TEST CONTROL #	ACTIVITY	INITIALS
8/2/78	1	3 ft plume test Coke Oven A IV	
8/2/78	2	" " " Coke Oven A V	
8/3/78	3	" " " Coke Oven A V	
8/3/78	4	" " " Coke Oven A VII	
12:53 8/4/78	5	1 ft plume test Coke Oven A VI	
8/4/78	6	" " " " " A I	
8/5/78	7	" " " " " A I	
1233 8/4/78	5A	Ambient test > Combined AM +	
8/4/78	5B	" " PM into 1 test run per B. Riley.	
8/5/78	7A	Ambient test	
Note: Ambient test 5A + 5B Coincide with Vent tests 5 + 6			

SAMPLE IDENTIFICATION LOG

BLANKS

Sample ~~EPA~~ Number	Sample Location	Date ~~Run~~	Contents	QA ✓	Comments	Collected By
BSO/BAP-MCB	Reagent/Bottle	7/31	$MeCl_2$ (Lot 3023)	✓	Blanks	GH
" -SGB	"	"	Silica Gel	✓	"	GH
" -PFB	"	"	Filter (2 sent)	✓	"	GH
" -AB	"	"	Acetone (Lot AA784)	✓	"	GH
" -BB	"	"	Benzene (Lot 1043)	✓	"	GH
" -XRB	"	"	XAB-2 (Lot 3, 149g)	✓	"	GH
		7/31				
BSO/BAP-O-UMCB	EQUIP BLANK	"	$MeCl_2$	✓	Vent Pipe	JMC
" " -YBB	" "	"	Benzene	✓	" "	JMCR
" " NMCB	" "	"	$MeCl_2$	✓	Common Nozzle	D.W
" " NBB	" "	"	Benzene	✓	" "	D.W
BAP-O-PRB-1	" "	"	$MeCl_2$ Train 1	✓	Probe, Filt front	GH
" " " -2	" "	"	" " 2	✓	" " "	CC
" " MRB-1	" "	"	" " 1	✓	Module Rinse	GH
" " " -2	" "	"	" " 2	✓	" "	CC
" " CIB-1	" "	"	" " 1	✓	Combined Impinger	GH
" " " -2	" "	"	" " 2	✓	" "	CC
BSO-O-PIAB-1	" "	"	Acetone Train 1	✓	Probe, Impinger	D.W
" " " -2	" "	"	" " 2	✓	" "	JMCR
" " PIBB-1	" "	"	Benzene " 1	✓	" "	DW
" " " -2	" "	"	" " 2	✓	" "	JMCR
" " CIMCB-1	" "	"	$MeCl_2$ " 1	✓	Combined Imp	D.W
" " " -2	" "	"	" " 2	✓	" "	J.M.C.R
" " -CIBB-1	" "	"	Benzene " 1	✓	" "	D.W
" " " -2	" "	"	" " 2	✓	" "	JMC
BSO/BAP-O-MCB	Reagent Blank	8/3	$MeCl_2$			
Note: train 2	Probe will not be needed for ambient sampling ∴ small blank volume					
BSO-Water Blank	Reagent Blank	8/5	Water Blank	✓		

SAMPLE IDENTIFICATION LOG

BAP-5, 6

SAMPLE ~~EPA~~ Number	Sample Location	Run	DATE Contents	Comments	Collected By
BAP-5-PR	Coke Oven Vent	8/4	Probe (front filter ½) $MeCl_2$		✓
" -5-PF	"	"	Filter		✓
" -5-XR	"	"	XAD-2 Resin		✓
" -5-CD	"	"	Module Condensate	H_2O	✓
" -5-MR	"	"	" Rinse Back filter ½ $MeCl_2$		✓
BAP-6-PR	"	"	Probe (front filter ½) $MeCl_2$		✓
" -6-PF	"	"	Filter		✓
" -6-XR	"	"	XAD-2 Resin		✓
" -6-CD	"	"	Module Condensate	H_2O	
" -6-MR	"	"	" Rinse (back filter ½) $MeCl_2$		✓

SAMPLE IDENTIFICATION LOG
BSO TEST 7 + Ambient 7A

SAMPLE ~~EPA~~ Number	Sample Location	Run	DATE	Contents	Comments	Collect By
BSO-7-PIA	Coke Oven IA	8/5		Probe/Impinger Acetone		✓
" -7-PIB	"	"		" Benzene		✓
" -7-PF	"	"		Filter		✓
" -7-CICD	"	"		Combined Impinger Condensate	H_2O	✓
" -7-CIA	"	"		" " Rinse Acetone	1 of 2	✓
" -7-CIB	"	"		" " " Benzene		✓
BSO/~~EAP~~ -7-VMC	"	"		Vent Pipe Rinse $MeCl_2$		✓
" -7-VB	"	"		" " Benzene		✓
" -7-NMC	"	"		Nozzle $MeCl_2$		✓
" -7-NB	"	"		" Benzene		✓
BSO-37-SG	"	"		Silica Gel		✓
" -37-CC	"	"		Charcoal		✓
" 7A-CD	"	"		Knockout Imp Cond. DW	H_2O	✓
BSO-7-CIA				Not there.	~~2 of 2~~	✓
BSO-7A-PIA	"	"		Probe Impinger Acetone		✓
" -7A-PIB	"	"		" Benzene		✓
" -7A-PF	"	"		Filter		✓
" -7A-CICD	"	"		Combined Impinger Condensate	H_2O	✓
" -7A-CIA	"	"		" " Rinse Acetone		✓
" -7A-CIB	"	"		" " " Benzene		✓
" -57A-SG	"	"		Silica Gel		✓
" -57A-CC	"	"		Charcoal	1 of 2	✓
~~" -7A-CD~~	~~"~~	~~"~~		~~Knockout Imp Cond~~ DW		
" -7A-CD	"	"		Knockout Imp Cond DW		✓
" -57A-CC	"	"		Charcoal	2 of 2	✓

Notes: - 37- Designation is for test 3 through 7
- 57A Designation is for Ambient test 5A, 5B, 7

AMBIENT

SAMPLE IDENTIFICATION LOG

BSO + BAP 5A B

SAMPLE ~~EPA~~ Number	Sample Location	Run	DATE Contents	Comments	Collected By
SO-5AB-PIA	Coke Oven A II-AD	8/4	Probe Imp Rinse Acetone		✓
" - " -PIB	"	8 "	" " Benzene		✓
" - " -PF	"	"	Filter		✓
" - " -CICD	"	"	Combined Impinger Condensate	H_2C	✓
" " -CIA	"	"	" " Rinse Acetone		✓
" " -CIB	"	"	" " " Benzene		✓
" " ~~&~~ CIKX	"	"	Knockout Imp. Condensate		
~~B SO-Water Blank~~			~~New water containers for BSO-7 vent and BSO-6 amb~~		
	(see Blank sheet)				
BAP-5AB-PR	"	"	Probe (filter front) Rinse MeCl		✓
" " PF	"	"	Filter		✓
" " XR	"	"	XAD-2		✓
" " CD	"	"	Module Condensate	H_2C	✓
" " MR	"	"	Module Rinse MeCl		✓

APPENDIX D

TEST LOG

VIII FIELD TEST SCHEDULE

SATURDAY 7/29	Hartman, McReynolds fly to Pittsburg. Henry and Carpenter drive to Pittsburg. Arrive on site approximately 2:00PM and begin set up of equipment.
SUNDAY 7/30	Set up continues, blank clean up on trains and prep for actual testing. Sunday evening Moore and Wagoner arrive from West Coast.
MONDAY 7/31	A. M. Safety meeting, P. M. testing preparation
TUESDAY 8/1	Test A. M. clean up, test P. M. clean up (pre-test runs)
WEDNESDAY 8/2	Test A. M. clean up, test P. M. clean up
THURSDAY 8/3	Test A. M. clean up, test P. M. clean up
FRIDAY 8/4	Insure all samples are taken and catalogued, pack up and go home.

<u>Personnel</u>

Hartman	Team Leader, supervisor, trouble shooter
Moore	Clean up manager, sample accountability, GC's
McReynolds, Henry, Carpenter, Wagoner	Team members-testing, clean up, sample recovery, etc.

APPENDIX E

PROJECT PARTICIPANTS

PROJECT PARTICIPANTS

Names	Company	Purpose
Gene Riley	EPA, Durham	Project Coordinator
Roy Neulight	EPA, Durham	Observe Test
Mike Hartman	TRW	Testing Team Leader
Dave Moor	TRW	Testing
Jim McReynolds	TRW	Testing
Gary Henry	TRW	Testing
Clay Carpenter	TRW	Testing
Dan Wagoner	TRW	Testing
Tyronne Smith	TRW	Testing

TRW

ACCOUNTABILITY LOG

CLIENT EPA LOCATION USS Clairton

TYPE SAMPLE(S) Coke Oven Vent Leaks

REMARKS:

DATE/TIME	~~MASTER~~ TEST CONTROL #	ACTIVITY	INITIALS
8/2/78	1	3 ft plume test Coke Oven A II	
8/2/78	2	" " " Coke Oven A I	
8/3/78	3	" " " Coke Oven A I	
8/3/78	4	" " " Coke Oven A VII	
12:53 8/4/78	5	1 ft plume test Coke Oven A II	
8/4/78	6	" " " " " A I	
8/5/78	7	" " " " " A I	
1233 8/4/78	5A	Ambient test } Combined AM +	
8/4/78	5B	" " } PM into 1 test run per B. Riley.	
8/5/78	7A	Ambient test	
Note: Ambient test 5A + 5B Coincide with Vent tests 5 + 6			

TRW SYSTEMS

AVOID VERBAL ORDERS

TO Gene Riley Bldg. Room DATE

FROM Mike Hartman Bldg. Room EXT.

SUBJECT:

Gene Here are the samples taken, I will try and put them in a more reasonable order and send you a copy of that but I thought I would send these first.

Mike.

SHIPPER:

Battelle Memorial Institute
COLUMBUS LABORATORIES
505 KING AVENUE
COLUMBUS, OHIO 43201

SHIPPING MEMO

AREA CODE 614 PHONE 424-6424

SHIPPER'S NUMBER N 4009

DATE

SHIPMENT MADE FOR
- ☐ Return and Credit
- ☒ Repairs
- ☒ Adjustment
- ☐ Replacement
- ☐ Other

REMARKS:

REFER TO PHONE CALL BY:

DATE

LETTER BY:

DATE

FREIGHT CARRIER	
PRO. NO.	AMOUNT
DATE SENT TO BUSINESS OFFICE FOR PAYMENT	
NUMBER OF PACKAGES CARTONS BOXES CRATES OTHER	
WEIGHT	
DATE OF SHIPMENT	
SHIPPING CLERK	

SHIP TO [illegible]

ATTENTION OF

STREET [illegible]

CITY [illegible] STATE N.C. ZIP CODE [illegible]

REFER TO OUR PURCHASE ORDER NO.

BY WAY OF

☒ PREPAID ☐ COLLECT ☐ LETTER ENCLOSED

QUANTITY	DESCRIPTION	INVENTORY NUMBER
1	[illegible]	
	[illegible]	
	[illegible]	
	[illegible]	
	Returned 8-16-78	
	[illegible]	
	[illegible]	
	[illegible]	
	[illegible]	

IS THE ABOVE SUBSTANCE HAZARDOUS?

☐ YES ☒ NO

PACKING LIST

8-3-78

1 Small leak determination -
2. All samples can be collected @ 1 hr. after charge
3. Large vent - $\frac{1}{2}$ to $\frac{3}{4}$ full open
4. Flow on train prior to test shall be set as low as possible (same procedure)
   Set flow on train - open vent.
5. Use 9" filter on BAP - 300°F
6. Exchange BSO filter if plugged
7. Photo
   a. Set probe slightly aside
   b. Set flows on BSO, BAP

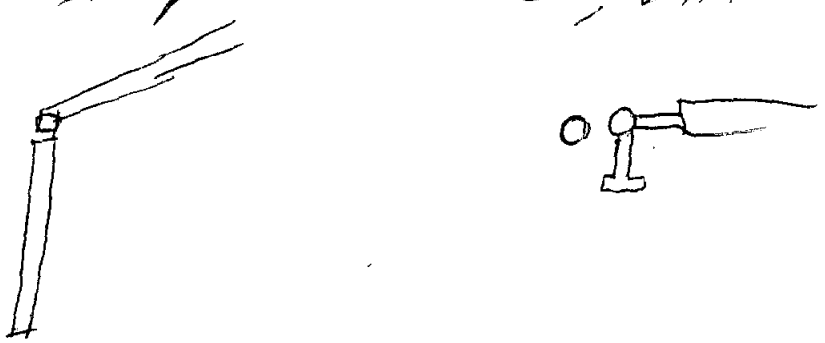

Photo
   c. open leak vent
   d. place nozzle over valve
      large leak - check opening
      small leak - nozzle to be place above
   e. Photograph entire leak area (wide angle)

Pay over $4.00 for motel room Wed site 8-2

8-1-78

Meeting at U.S.S. Research Center.

Gary Acetone gives presence of H_2S produces
4 methyl pentane-2 0 (T, C P)
Foul odor (avoid)

Failure of BSO material to redissolve in Benzene

USS. OHSA BSO method in coke oven,

B.S.O. - Pg 27 Extract for 6 hr.; 6 hrs. are not enough time. Find can be checked by fluorescent.

-P 24 nylon hard dissolves.

Roy's procedures

8-3-78

1 - START TEST 1 HR after charging

2. LARGE VENT RATE
A - USE RATE 3/4 to 1/2 of full open

B - Set flow on trains prior to TEST, set as low as possible to minimize plugging quickly

Try Beta out?

C - USE 9" filter in one train

D - change filter in other train if necessary

9 start run (PHOTO) as follows
A) SET probe slightly aside
B) SET flow rates of trains
C) open test / TAKE photo
D) ~~close valve~~ move nozzle
E) ~~over~~ VALVE.

f) check during run, photo if necessary

G) Photo @ end of run after trains shut off

Roy's cont.

8-3-78

3- Small leak RATE.
A - Set leak (wisp)
B - photo
C - Position probes; START Pump

D - Set probe higher 1" above vent if possible + ASSURE leak does not stop.

E - Usually check to assure leaking / frequently

F - 1 photo middle test
G - turn off pump
H - one photo, end of test.

ANALYSIS OF POLYNUCLEAR AROMATIC HYDROCARBONS FROM COKE OVER EFFLUENTS

This paper is a report on the Analysis of Polynuclear Aromatic Hydrocarbons From Coke Oven Effluents. The program was conducted by TRW for the Environmental Protection Agency, Emission Measurement Branch, Research Triangle Park, North Carolina under Contract Number EPA 68-02-2812. Four samples taken from a coke oven at Republic Steel Corporation in Gadsden, Alabama were used for methods development in polynuclear aromatic hydrocarbon determination.

Polynuclear aromatic hydrocarbons (PAH), also referred to as polycyclic organic matter (POM), are suspected of being serious health hazards since some of the individual compounds are known carcinogens. This class of compounds condense on particulate matter and can be inhaled into the lungs or contacted with the skin. When coal is pyrolyzed by a burning or coking process, significant amounts of PAHs are produced. In the burning process most of the organic material is destroyed through oxidation, producting water and carbon dioxide. In the coking process however, significant amounts of organics are evolved and emitted to the atmosphere. Many techniques exist for the determination of polynuclear aromatic hydrocarbons. Specific compound analysis for PAHs of particular interest or potency have been developed and are generally better than survey analysis techniques. As an example, the determination of benzo(a)pyrene can be accomplished quickly and accurately by thin layer chromatography (TLC) with quantitation using variable wavelength fluorescence, a method developed by the EPA[1]. Other specific PAHs have been determined by liquid chromatography using UV and/or fluroescence detection.

For general purpose determination of PAHs in complex mixtures the use of gas chromatography-mass spectrometry is unexcelled. The gas chromatograph is used to separate the complex mixture into individual component peaks and the mass spectrometer is used as a detector for both qualitative identification of the PAH and for quantitative determination. In simple cases where only a few PAHs are present, the use of packed gas chromatographic

[1] New Benzo(a)pyrene Analytical Method; EPA EMSL ACB SFMCS RTP N.C.: Don Swanson et.al. (no date).

columns are recommended. Packed columns are generally easier to use, require a shorter time for analysis, and are cheaper. When highly complex mixtures of PAHs are present or significant interferences occur, the use of capillary columns becomes necessary. Capillary column selection is usually dependent on the volatility and polarity of the PAHs to be determined.

PAHs typically show very strong molecular ions (the mass representative of molecular weight) in their mass spectra because of the stability of the aromatic system. The strong molecular ion allows for a very simple identification of molecular weight even in complex mixtures. PAHs produce very sensitive spectra when ionized in a mass spectrometer and can be identified in a complex mixture quite easily. The disadvantage of this strong molecular ion production is that isomeric PAHs produce spectra which are virtually identical. The mass spectrometer is a rather poor device for distinguishing isomers since once ionized the compound will seek its most thermodynamically stable form. Since isomeric PAHs produce similar or identical mass spectra the determination of structure is accomplished by comparison of GC retention time using standards.

The major limitation of the gas chromatograph is the volatility of compounds to be analyzed. In order to be determined, PAHs must produce good chromatographic peaks at temperatures below 300°C. Above 300°C even the most stable GC column liquid phases produce high background in the mass spectrometer. This GC temperature limitation means that high molecular weight PAHs (above MW=300) cannot be reliably determined by this technique.

A limited amount of work has been done in the determination of high molecular weight PAHs using liquid chromatography. With a liquid chromatograph, the need for volatility does not exist and materials of virtually any molecular weight can be determined. With the proper selection of columns and the incorporation of a variable wavelength excitation and detection fluorometer, PAHs can be determined with accuracy. Chromatographic separation is not always required provided the excitation and detection wavelength can be selected specifically for PAHs of interest. An example of a liquid chromatographic determination of polynuclear aromatic hydrocarbons will be presented.

GC/MS RESULTS FROM COKE OVEN SAMPLES

Compound	Molecular Weight	(Concentration (mg/ml) 367	371	366	364	Comments
Naphthalene	128	4.2	4.6	6.8	0.34	
Fluoranthene	202	1.3	4.2	2.9	0.075	
Unknown	202	0.17	0.55	0.55	T	
Pyrene	202	0.9	3.0	1.8	T	
Chrysene	228	0.3	1.2	0.8	0.028	Chrysene/Tripheny-lene unresolved
Triphenylene	228					
Unknown	228	0.007	0.09	0.1	T	
Benz (a) anthracene	228	0.30	1.0	0.8	0.024	
*Benzo (c) phenanthrene	228	0.044	0.14	0.18	T	RRT used for ID
Benzo (a) pyrene	252	0.24	0.7	0.65	0.02	
Benzo (e) pyrene	252	0.12	0.3	0.38	0.01	
Benzofluoranthene	252	0.47	1.7	1.2	0.043	
Unknown	252	0.07	0.27	0.24	T	
*Benz (j) aceanthrylene	252	-	-	-	-	No RRT to confirm
Perylene	252	0.14	0.17	0.27	ND	
*7,12-Dimethylbenz (a) anthracene	256	ND	ND	ND	ND	MS should be unique
Dibenzo (c, g) carbazole	267	ND	ND	ND	ND	
*3-Methylcholanthrene	268	ND	ND	ND	ND	MS should be unique
Indeno (1,2, 3-cd) pyrene	276	0.10	0.22	0.42	T	
Unknown	276	0.055	0.14	0.19	T	
Unknown	276	0.01	0.055	0.05	ND	
*Dibenzo (a, h) anthracene	278	0.055	0.16	0.23	ND	Have 1, 2, 3, 4 and
*Dibenzo (a, j) anthracene	278	0.055	0.80	0.12	ND	1, 2, 5, 6 Standards
Unknown	278	0.018	0.022	0.048	ND	
*Dibenz acridine	279	ND	ND	ND	ND	MS unique
*Dibenzo (a, h) pyrene	302	0.12	0.36	0.50	ND	Unresolved
*Dibenzo (a, i) pyrene	302					

*Standard not available (identification based on published RRT and MS)

ND = Not detected < 0.005 mg/ml

T = Trace < .01 mg/ml but detected

RECONSTRUCTED GC FROM 60 METER OV-17 GLASS CAPILLARY COLUMN
GC/MS (SAMPLE 367)

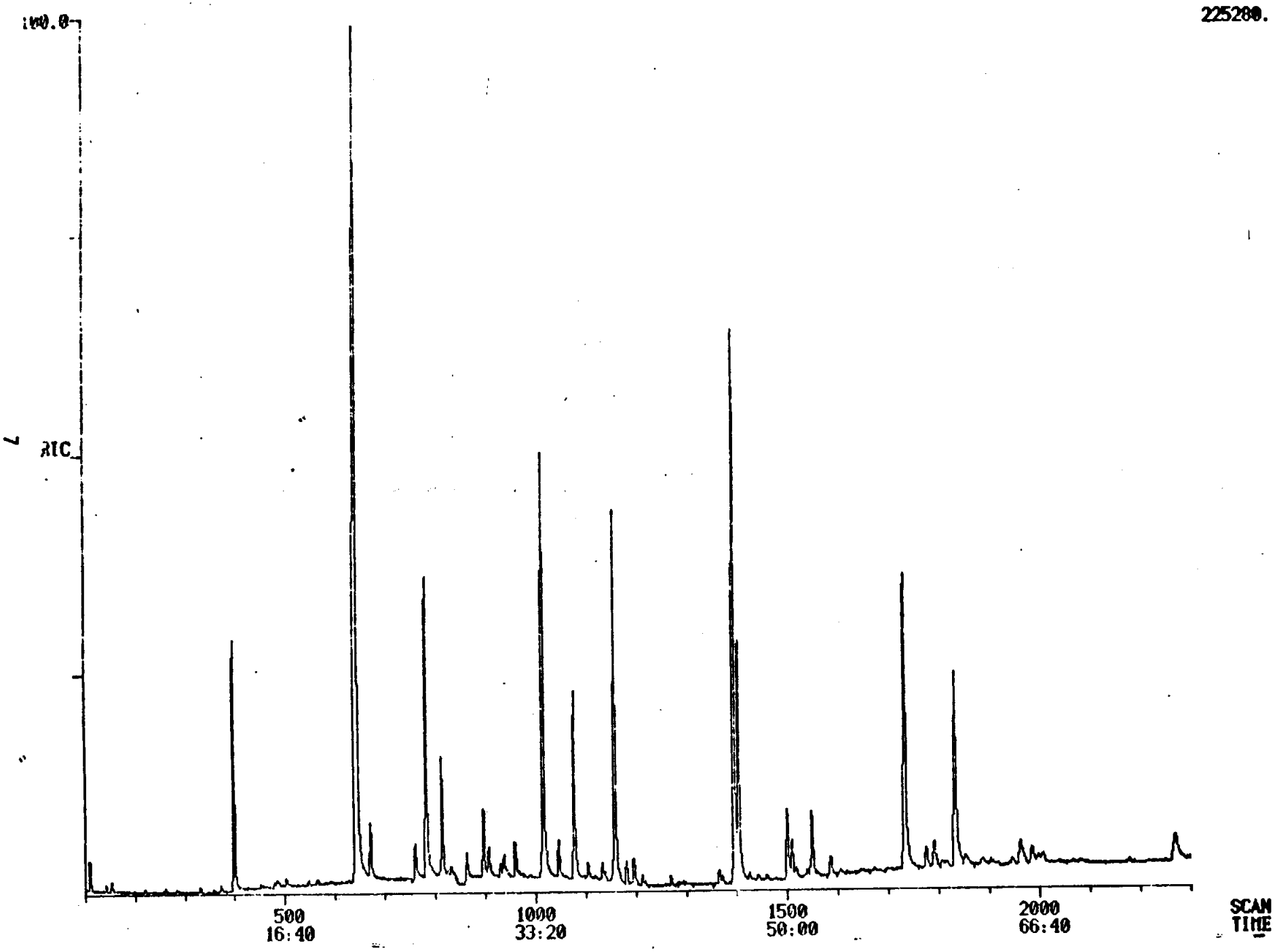

Rec'd 1-4-80

ROUGH DRAFT

File - 78-CKO-13

SOURCE TEST AT U.S. STEEL
CLAIRTON COKE OVENS

CLAIRTON, PENNSYLVANIA

by

M. W. HARTMAN

Contract No. 68-02-2812
Assignment No. 13

EPA Technical Manager: Gene Riley

Prepared for:

Emission Standards and Engineering Division
Emission Measurements Branch
U. S. Environmental Protection Agency
Research Triangle Park, NC 27711

TRW
ENVIRONMENTAL ENGINEERING DIVISION
3200 E. Chapel Hill Rd./Nelson Hwy.
P.O. Box 13000
Research Triangle Park, NC 27709

ROUGH DRAFT

TRW ENVIRONMENTAL ENGINEERING DIVISION

Received 8/18/80

1423.TEE.80.046
August 15, 1980

10 copies

Send with copy of letter to Gene Riley

Mr. J. E. McCarley
Emission Measurement Branch
ESED, Mail Drop 13
Research Triangle Park, NC 27711

Dear Mr. McCarley:

Enclosed are four copies of the draft report from the source test performed at U. S. Steels, Clairton, Pennsylvania Plant, under contract number 68-02-2812 work assignment 23. A copy of this report has been sent to Mr. Roy Neulicht of the Test Support Section for his review. If there are any questions please do not hesitate to call me.

Sincerely,

Michael W. Martin FOR Tony Eggleston

Tony E. Eggleston, Manager
Test and Evaluation

TEE/dej

Enclosures

cc: Roy Neulicht w/enclosures
Gene Riley
Linda Harmon

Progress Center
3200 E. Chapel Hill Rd./Nelson Hwy.
P.O. Box 13000
Research Triangle Park, N.C. 27709 (919) 541-9100

DRAFT

Need U.S.S. Response by 12th

SOURCE TEST AT U.S. STEEL
CLAIRTON COKE OVENS

CLAIRTON, PENNSYLVANIA

by

M. W. HARTMAN

Reviewed
8/22/80
R. Venkatt

Contract No. 68-02-2812
Assignment No. 23

EPA Technical Manager: Gene Riley

Requested 10 copies
CAK

Prepared for:

U. S. Environmental Protection Agency
Emission Standards and Engineering Division
Emission Measurements Branch
Research Triangle Park, NC 27711

DRAFT

TRW Environmental Engineering Division
3200 E. Chapel Hill Rd./Nelson Hwy.
P. O. Box 13000
Research Triangle Park, NC 27709

(1) Include Pom result in Discuss.
(2) Editorial comments.
(3) Add Photo hog

PREPARATION OF BAP/POM AND BSO SAMPLES
CLAIRTON COKE WORKS

The attached schedule outlines the specific details of how each sample collected at the Clairton Coke Works is to be prepared and split for analysis. The schedule is detailed as follows:

I. Splitting nozzle/vent samples.

II. Combining nozzle/probe rinse samples for BAP.

III. BAP sample preparation and splitting.

IV. Combining BAP sample fractions.

V. Re-extraction of filter and resin with cyclohexane.

VI. Combining BSO probe/nozzle samples.

VII. Splitting BSO sample fractions.

VIII. List of samples to be sent to EPA for TLC analysis.

IX. List of samples to be sent to EPA for transmittal to U.S. Steel Corp.

X. List of samples for GC/MS analysis.

XI. List of samples for BSO analysis.

XII. List of samples to be retained for possible analysis at a future date.

Notes:

Prior to conducting this work run blank analysis on MeCL, cyclohexane, and benzene to be used in laboratory to assure contamination is not present.

1. Assure that splitting of the samples is done accurately to the indicated fractions since split samples will be recombined before analysis is conducted.

2. Assure that samples are homogeneous prior to splitting. Use ultrasonic agitation if necessary.

3. Prepare POM/BAP samples according to procedures outlined in the draft test method for BAP except that methylene chloride shall be used instead of cyclohexane (filter and solid resin extraction).

4. Prepare and analyze BSO samples according to procedures outlined in the draft test method for benzene soluble organics.

5. Extract filter and resin according to procedures established in the BAP method, paragraph 4.3, except that methylene chloride, in lieu of cyclohexane, is to be used. Split the methylene chloride extract; retain the filter and solid resin for re-extraction with cyclohexane according to the procedures of paragraph 4.3 of the BAP method.

6. Extract the condensate according to the extraction procedures of paragraph 4.3.3. of the BSO test method substituting cyclohexane for benzene. (Do not filter or bring to dryness).

7. Evaporate the sample to dryness and then redissolve the sample residue in benzene. Combine this benzene solution as indicated.

I Splitting Nozzle / VENT Sampling

Nozzle Identification	Sample Identification	Preparation	Splitting	
Bending Nozzle Test	[illegible]-1-NB	Agitation	BAP-1-NB	$\left(\frac{A}{A+B}\right)$
			ABO-1-NB	B
	[illegible]-2-NB		BAP-2-NB ABO-2-NB	[illegible]
	[illegible]-3-NB		[illegible]	[illegible]
			ABO-3-NB	[illegible]
	[illegible]-4 NB		[illegible]-4-NB	[illegible]
			[illegible]	[illegible]
	[illegible]-5-NB		[illegible]	[illegible]
			[illegible]	[illegible]
	[illegible]-6-NB		[illegible]	[illegible]
			[illegible]	[illegible]
	[illegible]-7-NB		[illegible]	[illegible]
			[illegible]	[illegible]
Nozzle [illegible]	[illegible]-1-NMC	Agitation	[illegible]-1-NMC	[illegible]
			[illegible]-1-NMC	[illegible]
	[illegible]		[illegible]	[illegible]
			[illegible]-NMC	[illegible]
			[illegible]	[illegible]
			[illegible]	[illegible]
			[illegible]	[illegible]
			[illegible]	[illegible]
			[illegible]	[illegible]
			[illegible]	[illegible]
			ABO-5-NB	[illegible]

✓ where: A = [illegible] B = [illegible] [illegible] affected [illegible]

(I) Splitting Nozzle / Vent Samples (cont.-2)

Sample Description	Sample No.	Preparation	Specimen	
[illegible]	[illegible]	Agitated	BAP-6-[illegible]	[illegible]
			BSO-[illegible]	[illegible]
	[illegible]		BAP [illegible]	[illegible]
			[illegible]	[illegible]
Benzene Vent Rinse	BAP/BSO-3-VB	Agitated	BAP-3-VB-	1/2
			BSO 3-VB	1/2
	BAP/BSO-7-VB		BAP 7 [illegible]	1/2
			BSO-7 [illegible]	1/2
vent Rinse Water	BAP/BSO-3-VMC	Agitated	BAP-3-VMC-A	1/4
			BAP-3-VMC-B	(1/4)
			[illegible]-C	
	[illegible]		7-VMC-A	1/4
			BAP 7-VMC-B	(1/4)
			[illegible]-7-VMC-C	

(II)

Sample		
BAP-1-NWC		BAP-1-NPR
BAP-1-PR		
BAP-2-NWC		BAP-2-NPR
BAP-2-PR		
BAP-3-NWC		BAP-3-NPR
BAP-3-PR		
[illegible]		BAP-4-NPR
[illegible] 4-PR		
[illegible]		[illegible]
[illegible] 1 PI		
BAP-5-NWC		[illegible]
BAP-[illegible] PR		

III BAP [illegible] Preparation [illegible] Splitting

Sample Fraction	Sample Number	Preparation	Splitting
#1 Nozzle Probe/Filter MC	BAP-1-NPR	- Agitate - Measure Volume	BAP-1-NPR-A (1/2)
"		↓	BAP-1-NPR-B (1/4)
		Measured Volume	BAP-1-NPR-C (1/4)
#2 Nozzle Probe/Filter MC	BAP-2-NPR		BAP-2-NPR-A (1/2)
			BAP-2-NPR-B (1/4)
			BAP-2-NPR-C (1/4)
#3 Nozzle Probe/Filter MC	BAP-3-NPR		BAP-3-NPR-A (1/2)
			BAP-3-NPR-B (1/4)
			BAP-3NPR-C (1/4)
#4 Nozzle Probe/Filter MC	BAP-4-NPR		BAP-4-NPR-A (1/2)
			BAP-4-NPR-B 1/4
			BAP-4-NPR-C (1/4)
#5 Nozzle Probe/Filter MC	BAP-5-NPR		BAP-5-NPR-A (1/2)
			BAP-5-NPR-B 1/4
			BAP-5-NPR-C (1/4)
#5AB Nozzle Probe/Filter	BAP-5AB-PR		BAP-5AB-PR-A (1/2)
			BAP-5AB-PR-B (1/4)
			BAP-5AB-PR-C (1/4)
#6 Nozzle Probe/Filter	BAP-6-NPR		BAP-6-NPR-A 1/2
			BAP-6-NPR-B 1/4
			BAP-6-NPR-C (1/4)

(III) Sample Splitting - BAP (cont. -2)

Sample Fraction	Sample Number	Preparation	Splitting	
#7- Probe/filter	BAP-7-NPR	Agitate	BAP-7-PR-A	(1/2)
			BAP-7-PR-B	(1/4)
			BAP-7-PR-C	(1/4)
#7A Probe/filter	BAP-7A-PR		BAP-7-PR-A	(1/2)
			BAP-7-PR-B	(1/4)
			BAP-7-PR-C	(1/4)
Filter	BAP-1-PF	Extract with Methylene Chloride (See METHOD [illegible] 4.3) (See note #5)	BAP-1-PF-A	(1/2)
			BAP-1-PF-B	(1/4)
			BAP-1-PF-C	(1/4)
Filter	BAP-2-PF		BAP-1-PF-A	(1/2)
			BAP-1-PF-B	(1/4)
			BAP-1-PF-C	(1/4)
Filter	BAP 3-PF		BAP 3-PF-A	(1/2)
			BAP-3-PF-B	(1/4)
			BAP-3-PF-C	(1/4)
Filter	BAP-4-PF		BAP-4-PF-A	(1/2)
			BAP-4-PF-B	(1/4)
			BAP-4-PF-C	(1/4)
Filter	BAP-5-PF		BAP-5-PF-A	(1/2)
			BAP-5-PF-B	(1/4)
			BAP-5-PF-C	(1/4)

III Sample Splitting - BAP (cont - 3)

Sample Fraction	Sample Number	Preparation	Splitting
Filter	BAP-SAB-PF	Extract with Methylene Chloride	BAP-SAB-PF-A (1/2) BAP-SAB-PF-B (1/4) BAP-SAB-PF-C (1/4)
	BAP-G-PF		BAP-G-PF-A (1/2) BAP-G-PF-B (1/4) BAP-G-PF-C (1/4)
	BAP-D-PF		BAP-D-PF-A (1/2) BAP-D-PF-B (1/4) BAP-D-PF-C (1/4)
	BAP-7A-PF		BAP-7A-PF-A (1/2) BAP-7A-PF-B (1/4) BAP-7A-PF-C (1/4)
XAD-2 Resin	BAP-1-XR	Extract with Methylene Chloride - Split Extract - (Retain resin after extraction See note #5) ↓	BAP-1-XR-A (1/2) BAP-1-XR-B (1/4) BAP-1-XR-C (1/4)
	BAP-2-XR		BAP-2-XR-A (1/2) BAP-2-XR-B (1/4) BAP-2-XR-C (1/4)
	BAP-3-XR		BAP-3-XR-A (1/2) BAP-3-XR-B (1/4) BAP-3-XR-C (1/4)

III Sample Splitting – BAP (continued-4)

Sample Fraction	Sample number	Preparation	Splitting
XAD-2 Resin	BAP-4-XR		BAP-4-XR-A (1/2)
			BAP-4-XR-B (1/4)
			BAP-4-XR-C (1/4)
	BAP-5-XR		BAP-5-XR-A (1/2)
			BAP-5-XR-B (1/4)
			BAP-5-XR-C (1/4)
	BAP-5AB-XR		BAP-5AB-XR-A (1/2)
			BAP-5AB-XR-B (1/4)
			BAP-5AB-XR-C (1/4)
	BAP-6-XR		BAP-6-XR-A (1/2)
			BAP-6-XR-B (1/4)
			BAP-6-XR-C (1/4)
	BAP-7-XR		BAP-7-XR-A (1/2)
			BAP-7-XR-B (1/4)
			BAP-7-XR-C (1/4)
	BAP-7A-XR		BAP-7A-XR-A (1/2)
			BAP-7A-XR-B (1/4)
			BAP-7A-XR-C (1/4)
Modified Condensate	BAP-1-CD	extract with methylene chloride & split extract (Note 6)	BAP-1-CD-A [illegible]
			BAP-1-CD-B [illegible]
	BAP-2-CD		no sample
	BAP-3-CD		no sample

III Sample Splitting - BAP (continued - 5)

Sample Fraction	Sample Number	Preparation	Splitting
Middle Condensate	BAP-4-CD		No Sample
	BAP-5-CD		Combine with BAP-5-MR Before Splitting
	BAP-5AB-CD		[illegible] BAP-5AB-MR
	BAP-6A-CD		No Sample
	BAP-7-CD		No Sample
	BAP-7A-CD		No Sample
Middle Rinse $MoCl_2$	BAP-1-MR	Measure Volume of [illegible]	BAP-1-MR-A (1/2)
			BAP-1-MR-B (1/4)
			BAP-1-MR-C (1/4)
	BAP-2-MR		BAP-2-MR-A (1/2)
			BAP-2-MR-B (1/4)
			BAP-2-MR-C (1/4)
	BAP-3-MR		BAP-3-MR-A (1/2)
			BAP-3-MR-B (1/4)
			BAP-3-MR-C (1/4)
	BAP-4-MR		BAP-4-MR-A (1/2)
			BAP-4-MR-B (1/4)
			BAP-4-MR-C (1/4)
	BAP-5-MR	Note: Add BAP-5-CD Before Splitting	BAP-5-MR-A (1/2)
			BAP-5-MR-B (1/4)
			BAP-5-MR-C (1/4)
	BAP-5AB-MR	Note: Add BAP-5AB-CD [illegible]	BAP-5AB-MR-A (1/2)
			BAP-5AB-MR-B (1/4)
			BAP-5AB-MR-C (1/4)

III Sample Splitting - BAP (cont.6)

Sample Fraction	Sample Number	Preparation	Splitting	
Membrane Rinse	BAP-6-MR	Measure Volume	BAP-6-MR-A	(1/2)
			BAP-6-MR-B	(1/4)
			BAP-6-MR-C	(1/4)
	BAP-7-MR		BAP-7-MR-A	(1/2)
			BAP-7-MR-B	(1/4)
			BAP-7-MR-C	(1/4)
	BAP-7A-MR		BAP-7-MR-A	(1/2)
			BAP-7-MR-B	(1/4)
			BAP-7-MR-C	(1/4)
[illegible]	[illegible]	[illegible]	[illegible]	
			[illegible]	
			[illegible]	
	[illegible]	[illegible]	[illegible]	
			[illegible]	
			[illegible]	
[illegible]	[illegible]	[illegible]	[illegible]	
			[illegible]	
			[illegible]	
	[illegible]		[illegible]	
			[illegible]	
			[illegible]	

Combining [illegible] Fractions

Sample Fractions	Preparation	Combined Sample
BAP-1-NPR-A		BAP-1-A
BAP-1-PF-A		
BAP-1-XR-A		BAP-1-XA
BAP-1-MR-A		
BAP-1-CD-A		
BAP-2-NPR-A		BAP-2-A
BAP-2-PF-A		
BAP-2-XR-A		BAP-2-XA
BAP-2-MR-A		
BAP-3-NPR-A		BAP-3-A
BAP-3-PF-A		
BAP-3-XR-A		BAP-3-XA
BAP-3-MR-A		
BAP-4-NPR-A		BAP-4-A
BAP-4-PF-A		
BAP-4-XR-A		BAP-4-XA
BAP-4-MR-A		
BAP-5-NPR-A		BAP-5-A
BAP-5-PF-A		

IV Combining [illegible]

Sample Fractions	Preparation	Combined Sample
BAP-5-XR-A		BAP-5-XA
BAP-5-MR-A		
BAP-5AB-PR-A		BAP-5AB-A
BAP-5AB-PF-A		
BAP-5AB-XR-A		BAP-5AB-XA
BAP-5AB-MR-A		
BAP-6-NPR-A		BAP-6-A
BAP-6-PF-A		
BAP-6-XR-A		BAP-6-XA
BAP-6-MR-A		
BAP-7-NPR-A		BAP-7-A
BAP-7-PF-A		
BAP-7-XR-A		BAP-7XA
BAP-7-MR-A		
BAP-7A-PR-A		BAP-7A-A
BAP-7A-PF-A		
BAP-7A-XR-A		BAP-7A-XA
BAP-7A-MR-A		

(V) Reextract Filter and Resin with Cyclohexane - BAP

Sample	Preparation	Final Sample
BAP-1-PF	Take filter [illegible] with $MeCl_2$ and Re-extract with Cyclohexane - measure volume see page 5	BAP-1-PF-CH
BAP-2-PF		BAP-2-PF-CH
BAP-3-PF		BAP-3-PF-CH
BAP-4-PF		BAP-4-PF-CH
BAP-5-PF		BAP-5-PF-CH
BAP-6-PF		BAP-6-PF-CH
BAP-7-PF		BAP-7-PF-CH
BAP-5AB-PF		BAP-5AB-PF-CH
BAP-7A-PF		BAP-7A-PF-CH
BAP-1-XR	Retain Resin After extraction with $MeCl_2$ and Re-extract with Cyclohexane - measure volume see page 5	BAP-1-XR-CH
BAP-2-XR		BAP-2-XR-CH
BAP-3-XR		BAP-3-XR-CH
BAP-4-XR		BAP-4-XR-CH
BAP-5-XR		BAP-5-XR-CH
BAP-6-XR		BAP-6-XR-CH
BAP-7-XR		BAP-7-XR-CH
BAP-5AB-XR		BAP-5AB-XR-CH
BAP-7A-XR		BAP-7A-XR-CH

VI Combining BSO Probe/Nozzle Samples

Sample Fraction	Sample Number	Preparation	Combined Sample
Leak Vent Benzene	BSO-3-VB	—	BSO-3-V
Leak Vent MeCL	BSO-3-VMC	Dry, redissolve in benzene. Note #17	
[illegible]	BSO-7-VB	—	BSO-7-V
[illegible]	BSO-7-VMC	Same as above. Note #17	
Nozzle - Benzene	BSO-1-NB	—	BSO-1-P
Nozzle - MeCL	BSO-1-NMC	Dry, redissolve in benzene. Note #17	
Probe/Impinger [illegible]	BSO-1-PIB	—	
Probe/Impinger [illegible]	BSO-1-PICD		
	BSO-2-NB		BSO-2-P
	BSO-2-NMC	Note [illegible]	
	BSO-2-PIB		
	BSO-3-NB		BSO-3-P
	BSO-3-NMC	Note [illegible]	
	BSO-3-PIB		
	BSO-4-NB		BSO-4-P
	BSO-4-NMC	Note [illegible]	
	BSO-4-PIB		
	BSO-5-PIB		BSO-5-P
	BSO-5-NB		
	BSO-5-NMC	Note [illegible]	

VI Combine BSO prior/[illegible] samples (Cont.)

Sample fraction	Sample Number	Preparation	combined prof
	BSO-5AB-NB		
	BSO-5AB-NMC	NOTE #1	BSO-5AB-P
	BSO-5AB-P/B		
	BSO-6-NB		
	BSO-6-NMC	NOTE #2	BSO-6-P
	BSO-6-P/B		
	BSO-7-NB		
	BSO-7-NMC	NOTE #3	BSO-7-P
	BSO-7-P/B		
	BSO-7A-NB		
	BSO-7A-NMC	NOTE #4	BSO-7A-P
	BSO-7A-P/B		

VII [illegible] Fractions

SPLit The following samples into two Equal Portions after following [illegible] the preparation steps [illegible] appropriate solvent [illegible] Blank.
- Retain one portion of each sample and gravimetrically Determine the BSO charge as per model [illegible] - Fraction "A"
- Send other portion to GPA for transmittal to U.S. Steel - Fraction "B"

A. <u>VENT Rinse</u>

Preparation: Aqueous

BSO - 3 - V

BSO - 7 - V

B. Combined Probe, Nozzle, 1st impinger Rinse (Benzene)

Preparation: Aqueous

BSO - 1 - P

BSO - 2 - P

BSO - 3 - P

BSO - 4 - P

BSO - 5 - P

BSO - 5AB - P

BSO - 6 - P

BSO - 6A - P

BSO - 7A - P

C. Filter

Preparation: Extract as per Method. Split Extracted portion prior to filtration

BSO - 1 - PF
BSO - 2 - PF
BSO - 3 - PF
BSO - 4 - PF
BSO - 5 - PF
BSO - 5AB - PF
BSO - 6 - PF

BSO - 2 - PF
BSO - 7A - PF

Possibly split filter - saved [illegible]

VII Split BSO Samples
(Cont'd)

D. Probe, first impinger Rinse (Acetone)
Preparation: Agitate

BSO - 1 - PIA
BSO - 2 - PIA
BSO - 3 - PIA
BSO - 4 - PIA
BSO - 5 - PIA
BSO - 6 - PIA
BSO - 7 - PIA
BSO - 8 - PIA
BSO - 9 - PIA

Eg check if homogeneous

E. Impinger 1 and 2 Condensate
Preparation: Agitate

BSO - 3 - CICD
BSO - 7 - CICD
BSO - 9A - CICD

F. Impinger 1 and 2 Acetone Rinse
Preparation: Agitate

BSO - 3 - CIA
BSO - 7 - CIA
BSO - 9A - CIA

G. Impinger 1 and 2 Benzene Rinse
Preparation: Agitate

BSO - 3 - CIB
BSO - 7 - CIB
BSO - 9A - CIB

H. 1st Impinger Condensate
(Do not split)

BSO - 3AB - CICDX
BSO - 7 - CD
BSO - 9A - CD

VIII Samples Sent to EPA for TLC analysis (BAP)

Sample Fraction
BAP-1-NPR-B
BAP-1-PF-B
BAP-1-XR-B
BAP-1-MR-B
BAP-2-NPR-B
BAP-2-PF-B
BAP-2-XR-B
BAP-2-MR-B
BAP-3-NPR-B
BAP-3-PF-B
BAP-3-XR-B
BAP-3-MR-B
BAP-4-NPR-B
BAP-4-PF-B
BAP-4-XR-B
BAP-4-MR-B
BAP-5-NPR-B
BAP-5-PF-B
BAP-5-XR-B
BAP-5-MR-B
BAP-6-NPR-B
BAP-6-PF-B
BAP-6-XR-B
BAP-6-MR-B
BAP-7-NPR-B
BAP-7-PF-B

VIII Samples to EPM for TLC Non-Lipids (BAP)
(Cont. 2)

BAP-7-XR-B
BAP-7-MR-B
BAP-5AB-PR-B
BAP-5AB-PF-B
BAP-5AB-XR-B
BAP-5AB-MR-B
BAP-7A-PR-B
BAP-7A-PF-B
BAP-7A-XR-B
BAP-7A-MR-B
BAP-3-PF-CH
BAP-3-XR-CH
BAP-7-PF-CH
BAP-7-XR-CH
BAP-7A-PF-CH
BAP-7A-XR-CH
[illegible]-A
[illegible]-A
[illegible]-B
[illegible]-B
[illegible]-B
[illegible]-B
[illegible]-B

BSO/BAP-MCB-B
BAP/PFB-B
BSO/BAP-XRB-B
BSO/BAP-O-VMCB-B
BSO/BAP-O-NMCB-B
BAP-O-PRB-1B
BAP-O-PRB-2B
BAP-O-MRB-1B
BAP-O-MRB-2B
BSO/BAP-O-MCB-B

(IX) Samples Sent to EPA for transmittal to U.S. Steel

Sample Number	Sample Fraction
BAP-1-NPR-C	RUN #1 - combined nozzle, probe, filter holder rinse
BAP-1-PF-C	Run #1 - Filter extract
BAP-1-XR-C	Run #1 Rinse extract
BAP-1-MR-C	Run #1 Reagent Methanol Rinse
BAP-2-NPR-C	Run #2 - Same fractions as above
BAP-2-PF-C	
BAP-2-XR-C	
BAP-2-MR-C	
BAP-3-NPR-C	Run #3
BAP-3-PF-C	
BAP-3-XR-C	
BAP-3-MR-C	
BAP-4-NPR-C	Run #4
BAP-4-PF-C	
BAP-4-XR-C	
BAP-4-MR-C	
BAP-5-NPR-C	Run #5
BAP-5-PF-C	
BAP-5-XR-C	
BAP-5-MR-C	
BAP-6-NPR-C	Run #6
BAP-6-PF-C	
BAP-6-XR-C	
BAP-6-MR-C	
BAP-7-NPR-C	Run #7
BAP-7-PF-C	

(IX) Samples Sent to EPA Lab Transmittal to U.S. Steel (cont. 2)

Sample Number	Sample Fraction
BAP-7-XR-C	
BAP-7-MR-C	
BAP-5AB-PR-C	Row #5/#6 Ambient Sample
BAP-5AB-PF-C	
BAP-5AB-XR-C	
BAP-5AB-MR-C	
BAP-7A-PR-C	Row #7- Ambient Sample
BAP-7A-PF-C	
BAP-7A-XR-C	
BAP-7A-MR-C	
BAP-1-CD-C	
[illegible]	
[illegible]	
[illegible]	
[illegible]	
BAP-3-VMC-B	
BAP-3-VMC-B	

(X) Samples to be Analyzed for AOM By GC/MS
(Details of from analysis to be discussed with Project office)

Sample Fraction
BAP - 1 - A
BAP - 1 - XA
BAP - 2 - A
BAP - 2 - XA
BAP - 3 - A
BAP - 3 - XA
BAP - 4 - A
BAP - 4 - XA
BAP - 5 - A
BAP - 5 - XA
BAP - 6 - A
BAP - 6 - XA
BAP - 7 - A
BAP - 7 - XA
BAP - SMB - A
BAP - SMB - XA
BAP - 7A - A
BAP - 7A - XA
Blanks BAP - 0 - 1
BAP - 0 - 2
BSO / BAP - MCB - A (12)
BAP / PFB - A (13)
BSO / BAP - XRB - A (14)

* [illegible]

** [illegible] two sample [illegible]

XI. Samples for [illegible] Analyses

Sample Number	
BSC-3-V	Vent [illegible]
[illegible]-7-V	[illegible] 33.5 [illegible]
[illegible]	[illegible]
[illegible]	
[illegible]	
[illegible]	
[illegible]	
BSC-[illegible]	
[illegible]	
[illegible]	
[illegible]	
[illegible]	[illegible]
[illegible]	
[illegible]	
[illegible]	
[illegible]	
[illegible]	
[illegible]	
[illegible]	
[illegible]	
[illegible]	
[illegible]	
[illegible]	[illegible]
[illegible]	
[illegible]	
[illegible]	
[illegible]	
[illegible]	

XI

BSO-O-PIAB-1	Blank	- see Section 4.3.4
BSO-O-PIAB-2	"	"
BSO/BAP-AB	"	"
BSO-O-PIBB-1	Blank	see Section 4.3.5
BSO-O-PIBB-2	"	
BSO/BAP-BB	"	See Section 4.3.5
BSO-BFP	BLANK	see Section 4.3.2
BSO/BAP-MCB-C	Blank; Bring to Dryness; Redissolve in Benzene; follow procedures of 4.3.5	
BSO/BAP-O-VBB-A	See Section 4.3.5	
BSO/BAP-O-NBB-A	See Section 4.3.5	
BSO/BAP-O-VMCB-A	(Blank); Bring to dryness; Redissolve in Benzene; See Section 4.3.5	
BSO/BAP-O-NMCB-A	SAME AS ABOVE	

XII [illegible]

SAMPLE NUMBER
BAP 1 - [illegible] B
BAP - [illegible] B
BAP [illegible] B
BAP [illegible] B
BAP [illegible] NB
BAP - [illegible] NB
BAP - [illegible] NB
BAP - 1 - PF - CH
BAP - 1 - XR - CH
BAP - 2 - PF - CH
BAP - 2 - XR - CH
BAP - 4 - PF - CH
BAP - 4 - XR - CH
BAP - 5 - PF - CH
BAP - 5 - XR - CH
BAP - 6 - PF - CH
BAP - 6 - XR - CH
BAP - 5AB - PF - CH
BAP - 5AB - XR - CH
[illegible] 1 - VMC
[illegible] 1 - VE
[illegible]
[illegible] 2 - VMC
[illegible] 4 - VMC
[illegible] 4 - VE
BAP [illegible] 5 - VMC
BAP [illegible] 5 - VE

XII (cont.)

[illegible] 6 - VMC

[illegible]

[illegible]

[illegible] VB

* BAP - 7 - MPD

* [illegible] CA

* [illegible] CB

* [illegible] CD

* [illegible] 5VA - CC

* [illegible]

* BAP - [illegible] MPD

* [illegible] 5A - CIA

BAP [illegible] CICB - A

BAP - 5DA [illegible]

BA [illegible] A

[illegible] 5VA [illegible] - A

BS[illegible] 1 - CICD

BSO 2 - CICD

BSO - 4 CICD

BSO - 5 CICD

[illegible] - 5MA - CICD

BSO - 6 - CICD

BSO - 1 - CIA

BSO - 2 - CIA

BSO - 4 CIA

BSO - 5 CIA

BSO - 5AB CIA

XII Retain for Possible Future Analysis (cont. 3)

Sample Number
BSO-6-CIA
BSO-1-CIB
BSO-2-CIB
BSO-4-CIB
BSO-5-CIB
BSO-6-CIB
BSO-37-SG
BSO-7A-SG
BSO-37-CC
BSO-7A-CC
BSO-CIMCB-1
BSO-CIMCB-2
BSO-CIBB-1
BSO-CIBB-2
BSO/BAP-0-MCB-A
BSO/BAP-SGB
BSO/BAP-0-VBB-B
BSO/BAP-0-NBB-B
BAP-0-CIB-1
BAP-0-CIB-2

XIII Sample Blanks

(A) Splitting

Sample Number	Preparation	Split
BSO/BAP-MCB	—	BSO/BAP-MCB-A (1/3) BSO/BAP-MCB-B (1/3) BSO/BAP-MCB-C (1/3)
BSO/BAP-PFB	Filter 1 — Filter 2: Extract MeCl/2	BSO-PFB { BAP-PFB-A (1/2) { BAP-PFB-B (1/2)
BSO/BAP-SEB	—	—
BSO/BAP-PB	—	—
BSO/BAP-BB	—	—
BSO/BAP-XRB	Extract with MeCl	BSO/BAP-XRB-A (1/2) BSO/BAP-XRB-B (1/2)
BSO/BAP-O-VMCB		BSO/BAP-O-VMCB-A 1/2 BSO/BAP-O-VMCB-B 1/2
BSO/BAP-O-VBB		BSO/BAP-O-VBB-A (1/2) BSO/BAP-O-VBB-B (1/2)
BSO/BAP-O-NMCB		BSO/BAP-O-NMCB-A (1/2) BSO/BAP-O-NMCB-B (1/2)
BSO/BAP-O-NBB		BSO/BAP-O-NBB-A (1/2) BSO/BAP-O-NBB-B (1/2)
BAP-O-PRB-1		BAP-O-PRB-1A (1/2) BAP-O-PRB-1B (1/2)
BAP-O-PRB-2		BAP-O-PRB-2A (1/2) BAP-O-PRB-2B (1/2)
BAP-O-MRB-1		BAP-O-MRB-1-A (1/2) BAP-O-MRB-1-B (1/2)
BAP-O-MRB-2		BAP-O-MRB-2-A (1/2) BAP-O-MRB-2-B (1/2)
BAP-O-CIB-1		—
BAP-O-CIB-2		—

XIII Sample Blanks (cont. 2)

Sample fraction	Preparation	Split
BSO-O-PIAB-1		—
BSO-O-PIAB-2		—
BSO-O-PIBB-1		—
BSO-O-PIBB-2		—
BSO-C1MCB-1		—
BSO-C1MCB-2		—
BSO-C1BB-1		—
BSO-C1BB-2		—
BSO/BAP-O-MCB		BSO/BAP-O-MCB-A (1/2) BSO/BAP-O-MCB-B (1/2)

(B) Combining Blanks

Sample fractions	Combined Sample
BAP-O-PRB-1A BAP-O-MRB-1A BAP-O-MMCB-A	BAP-O-1
BAP-O-PRB-2A BAP-O-MRB-2A	BAP-O-2

CL-27436

COAL CONVEYED ON 7-30-78 (DATE)

COAL ANALYSIS FOR 8-1-78 (DATE)

REGULAR SAMPLES			SCREEN SIZE				CHEMISTRY			
#1 UNIT		BUNKER	% + 1/2"	% +1/4"	% +1/8"	% -1/8"	% H_2O	% SUL	% ASH	% VOLATILE MATTER
GROUP	TUBE									
31	22-8	1-344	5.3	14.9	15.8	64.0	6.3	1.15	7.45	28.55
31	8-4	1-344	5.2	14.7	17.2	62.9	6.5	1.17	7.65	28.95
31	4-12	1-344	3.3	14.9	18.2	65.6	6.7	1.21	7.90	28.85
31	Overall	1-344	4.6	14.8	17.1	63.5	6.5	1.15	7.45	28.80

CE-226-5

COAL CONVEYED ON 7-31-78 (DATE)

COAL ANALYSIS FOR 8-2-78 (DATE)

REGULAR SAMPLES #1 UNIT			SCREEN SIZE				CHEMISTRY			
GROUP	TUBE	TIMES	% + 1/2"	% +1/4"	% +1/8"	% -1/8"	% H_2O	% SUL	% ASH	% VOLATILE MATTER
31	12-8	1-344	.8	14.4	16.2	68.6	6.4	1.22	7.70	28.40
31	8-4	1-344	3.4	15.5	16.4	64.7	6.6	1.26	7.85	28.40
31	4-12	1-344	4.9	14.8	16.4	63.9	6.0	1.16	7.65	29.40
	Overall	1-344	3.0	14.9	16.3	65.8	6.3	1.21	7.75	28.75

CE-22636

COAL CONVEYED ON 8-1-78 (DATE)

COAL ANALYSIS FOR 8-3-78 (DATE)

REGULAR SAMPLES			SCREEN SIZE				CHEMISTRY			
#1 UNIT		BUNKER	% + 1/2"	% +1/4"	% +1/8"	% -1/8"	% H_2O	% SUL.	% ASH	% VOLATILE MATTER
GROUP	TURN									
31	12-8	1.3 + 4	5.2	13.8	16.4	64.6	6.5	1.18	7.95	29.45
	8-4	"	3.5	13.9	16.5	66.1	6.1	1.10	7.50	29.60
	4-12	"	4.1	13.1	17.2	65.6	6.1	1.13	7.45	29.70
31	Overall	1.3 + 4	4.3	13.6	16.7	65.4	6.2	1.14	7.65	29.60

3-22636

COAL CONVEYED ON 8-2-78 (DATE)

COAL ANALYSIS FOR 8-4-78 (DATE)

REGULAR SAMPLES			SCREEN SIZE				CHEMISTRY			
#1 UNIT		POWER	% + 1/2"	% +1/4"	% +1/8"	% -1/8"	% Fe_2O_3	% SUL	% ASH	% VOLATILE MATTER
GROUP	TUBE									
31	12-8	1.3 x 4	4.9	13.9	15.6	65.6	6.4	1.16	7.80	29.00
"	8-4	"	5.8	15.7	14.0	64.5	5.7	1.10	7.95	29.80
"	4-12	"	6.4	13.0	16.7	63.9	5.6	1.18	7.60	29.45
31	OVERALL	1.3 x 4	5.7	14.2	15.4	64.7	5.9	1.15	7.80	29.40

CX-22436

COAL ANALYSIS FOR 8-5-78 (DATE) COAL CONVEYED ON 8-3-78 (DATE)

REGULAR SAMPLES			SCREEN SIZE				CHEMISTRY			
#1 UNIT		BUNKER	% +1/2"	% +1/4"	% +1/8"	% -1/8"	% H_2O	% SUL	% ASH	% VOLATILE MATTER
GROUP	TURN									
31	12-8	1,3+4	4.1	14.5	16.1	65.3	6.0	1.15	ck 9.15	28.60
"	8-4	"	4.4	17.0	13.4	65.2	6.8	1.20	7.60	30.00
"	4-12	"	5.5	13.6	16.4	64.5	7.5	1.13	8.00	28.90
31	Overall	1,3+4	4.7	15.0	15.3	65.0	6.8	1.16	8.25	29.15

[illegible]

CX-22436

COAL ANALYSIS FOR 8-6-78 (DATE) COAL CONVEYED ON 8-4-78 (DATE)

REGULAR SAMPLES			SCREEN SIZE				CHEMISTRY			
#1 UNIT		BUNKER								
GROUP	TURN		% +1/2"	% +1/4"	% +1/8"	% -1/8"	% H2O	% SUL	% ASH	% VOLATILE MATTER
31	12-8	[illegible]	3.5	15.1	15.9	65.5	6.9	1.14	7.80	29.[illegible]
	8-4		6.1	14.9	13.2	65.8	7.4	1.21	7.85	[illegible]
	4-12		4.4	12.3	14.2	65.5	6.9	1.17	7.20	28.[illegible]
31	Overall	[illegible]	4.7	14.1	15.3	65.6	6.9	1.17	7.60	28.[illegible]

CE-22436

COAL ANALYSIS FOR 8-7-78 (DATE)

COAL CONVEYED ON 8-5-78 (DATE)

REGULAR SAMPLES			SCREEN SIZE				CHEMISTRY			
#1 UNIT		BUNKER	% +1/2"	% +1/4"	% +1/8"	% -1/8"	% H_2O	% SUL	% ASH	% VOLATILE MATTER
GROUP	TURN									
31	12-8	1.3-4	5.0	14.9	15.7	64.4	80	1.11	8.00	27.95
"	8-4	"	2.6	15.4	17.1	64.9	76	1.11	7.65	29.35
"	4-12	"	3.3	14.2	17.5	65.0	66	1.16	7.80	28.55
31	Overall	1.3-4	3.6	14.8	16.8	64.8	74	1.13	7.80	28.60

#2 UNIT

USIL L&S CLTN
BLAST FCE DIVS

7-31-78

ANALYSIS OF COKE PRODUCED ON 7-30-78

BATTS	CR	STAB	HARD	PLUS 3"	PLUS 2"	PLUS 3/4"	MOIST	SUL.	ASH	VM
1--38 7-12A	31	50.6	67.0	19.1	56.3	96.8	3.65	0.96	9.80	.55

USTL LAB CLIP
MOST FOR DIVS

8-1-78

ANALYSIS OF COKE PRODUCT ON 7-31-78

BATTS	GR	STAB	HARD	PLUS 3"	PLUS 2"	PLUS 3/4"	MOIST	SUL	[illegible]	V.
1-38 7-18	31	55.9	70.0	16.2	56.5	96.9	3.35	1.02	9.60	.55

[illegible] COLIN
COAL FOR DIVS

8-2-78

ANALYSIS OF CORE PRODUCED ON 8-1-78

DATES	CR	STAB	HARD	PLUS 3"	PLUS 2"	PLUS 3/4"	MOIST	SUL	ASH	VM
1-38 7-12A	31	52.6	68.7	18.7	57.9	96.9	2.65	1.01	9.70	.55

ANALYSIS OF CORE [illegible] DUCED ON 8-2-75

DATES	[illegible]	[illegible]	[illegible]	PLUS 3"	PLUS 2"	PLUS 3/4"	MOIST	SUL	[illegible]	[illegible]
1-3& 7-12A	31	52.0	69.[illegible]	20.2	58.0	96.5	3.30	0.95	10.[illegible]	[illegible]

USTL E&S CLIN
BLAST FCE DIVS
8-4-78

ANALYSIS OF COKE PRODUCED ON

BATTS	GR	STAB	HARD	PLUS
1-3& 7-12A	31	52.1	68.8	3" 20.5 56.

[illegible]

6-5-7[illegible]

ANALYSI[illegible]

DAYS [illegible] 31 [illegible] 1.2 6 [illegible] 19.[illegible] 96.[illegible] 5.[illegible]

1-3[illegible]

7-1[illegible]

USTL E&S CLTN
BLAST FUE DIVS

8-6-78

ANALYSIS OF COKE PRODUCED ON 8-5-78

BATTS	GR	STAB	HARD	PLUS 3"	PLUS 2"	PLUS 3/4"	MOIST	SUL	ASH	VM
1-3& 7-12A	31	51.4	68.1	19.1	56.7	96.7	4.40	0.96	9.90	.55

CS-1 1161
03

STEEL CORPORATION
WITKTON COKE AND COAL CHEMICAL WORKS

PUSHING AND CHARGING REPORT

UNIT NO. 1

12 Hrs. Beginning 12:00 A M

Date 7-29-78

BATTERY NO. A-1

OVEN NO.	TIME PUSHED		TIME CHARGED		NOTES
1					
3					
5					
7					
9					
11					
13					
15					
17					
19			12	13	
21	12	15	12	57	
23	12	59	1	23	
25	1	25	1	53	
27	1	55	2	28	
29	2	30	3	08	
31	3	10	3	38	
2	3	40	4	18	
4	4	20	4	48	
6	4	50	5	28	
8	5	30	6	05	
10					
12	6	30	7	08	
14	7	10	[illegible]	38	
16	7	40	8	30	
18	8	33	9	06	
20	9	00	9	42	14/19
22	9	44	10	18	
24	10	20	10	54	
26	10	56	11	30	
28	11	33			
30					
1					
2					

BATTERY NO. B-1

OVEN NO.	TIME PUSHED		TIME CHARGED		NOTES
1					
3					
5					
7					
9					
11					
13					
15					
17					
19			12	33	
21	12	35	1	03	
23	1	05	1	33	
25	1	35	2	08	
27	2	10	2	38	
29	2	40	3	18	
31	3	20	3	48	
2	3	50	4	28	
4	4	30	5	08	
6	5	10	5	38	
8	5	40	6	08	
10	6	10	6	38	
12	6	40	7	18	
14	7	20	7	[illegible]	
16	[illegible]	[illegible]	8	42	
18	8	44			
20	[illegible]	30	9	54	
22	9	50	10	30	
24	10	32	11	06	
26	11	09	11	45	21/30
28	11	49			
30					
C1					
C2	4	42	4	52	

BATTERY NO. A-2

OVEN NO.	TIME PUSHED		TIME CHARGED		NOTES
1					
3					
5					
7					
9					
11					
13					
15					
17			12	03	
19	12	05	12	43	2
21	12	45	1	13	[illegible]
23	1	15	1	43	[illegible]
25	1	45	2	18	[illegible]
27	2	20	2	53	[illegible]
29	2	45	[illegible]	[illegible]	[illegible]
31	3	30	4	08	[illegible]
2	4	10	4	38	42
4	4	40	5	18	53
6	5	20	5	48	59
8	5	50	6	18	[illegible]
10	6	20	6	48	[illegible]
12	6	50	7	28	[illegible]
14	7	36			[illegible]
16	[illegible]	[illegible]	8	[illegible]	
18	[illegible]	[illegible]	9	[illegible]	
20	[illegible]	32	[illegible]	[illegible]	
22	10	08	[illegible]	[illegible]	
24	10	44	[illegible]	[illegible]	
26	11	[illegible]	11	[illegible]	
28	11	56			0/21
30					
1					
2					

REMARKS:

P. Q
#1 40 49
#2 21 -21

Condition of Signals

Condition of Pusher

FORM NO. 1181
REV. 1-60

UNITED STATES STEEL CORPORATION
CLAIRTON COKE AND COAL CHEMICAL WORKS

PUSHING AND CHARGING REPORT

UNIT NO. _____

12 Hrs. Beginning 12:00 P M

Date 7-29-78

BATTERY NO. A-1					
OVEN NO.	TIME PUSHED		TIME CHARGED		NOTES
1	12	34	1	18	
3	1	00	1	54	
5	1	56	2	30	
7	2	32	3	06	
9	3	08	3	43	
11	3	44	4	33	
13	4	21	5	—	A-10
15	5	02	5	29	
17	5	31	6	05	
19	6	07	6	41	
21	6	43	7	17	
23	7	19	7	53	
25	7	55	8	29	
27	8	31	9	05	
29	9	07	9	41	
31	9	43	10	13	
2	10	15	11	—	
4	11	02	11	36	
6	11	38			
8					
10	4	25	LEAVE EMPTY		
12					
14					
16					
18					
20					
22					
24					
26					
28			12	06	
30	12	08	12	46	
1					
2					

BATTERY NO. B-1					
OVEN NO.	TIME PUSHED		TIME CHARGED		NOTES
1	12	48	1	30	
3	1	30	2	06	
5	2	08	2	45	
7	2	44	3	18	
9	3	20	3	54	
11	3	56	4	40	
13	4	42	5	09	
15	5	11	5	41	
17	5	43	6	17	
19	6	19	6	53	
21	6	55	7	29	
23	7	31	8	05	
25	8	07	8	41	
27	8	43	9	17	
29	9	19	9	53	
31	9	55	10	38	
2	10	25	11	12	
4	11	14	11	48	
6	11	50			
8					
10					
12					
14					
16					
18			2	10	
20					
22					
24					
26					
28			12	16	
30	12	18	[illegible]	50	
1	12	58	1	34	
2	10	40	11	18	

BATTERY NO. A-2					
OVEN NO.	TIME PUSHED		TIME CHARGED		NOTES
1	1	05	1	45	
3	1	44	2	14	
5	2	20	[illegible]	[illegible]	
7	2	56	[illegible]	[illegible]	
9	3	32	4	10	
11	4	12	4	50	3
13	4	52	5	17	7-10
15	5	19	5	53	10
17	5	55	6	29	22
19	6	31	7	05	28
21	7	07	7	41	34
23	7	43	8	17	40
25	8	19	8	53	46
27	8	55	9	29	52
29	9	31	10	03	58
31	10	08	10	48	64
2	10	50	11	24	9-13
4	11	26			79
6					4-83
8					
10					
12					
14					
16					
18					
20					
22					
24					
26					
28			12	[illegible]	
30	12	28	[illegible]	06	
1	1	13	1	47	
2					

REMARKS:

21 22 20

CC-10295 REV. 1161
03.001.6020

UNITED STATES STEEL CORPORATION
CLAIRTON COKE AND COAL CHEMICAL WORKS

PUSHING AND CHARGING REPORT

UNIT NO. 1

12 Hrs. Beginning 12:00 AM

Date 7/30/78

BATTERY NO. A-1					
OVEN NO.	TIME PUSHED		TIME CHARGED		NOTES
1	6	50	7	48	
3	9	45	[illegible]	[illegible]	
5	9	06	9	36	
7	9	36	10	13	
9	10	15	10	48	
11	10	50	11	23	
13	11	25	11	53	
15	11	55			
17					
19					
21					
23					
25					
27					
29					
31					
2					
4					
6			12	[illegible]	
8	12	25	12	45	
10					Pass up
12	1	20	1	45	
14	1	50	2	28	
16	2	50	2	[illegible]	
18	3	10			✓
20	3	30	4	03	
22	4	05	4	[illegible]	
24	4	[illegible]	5	08	
26	5	10	5	38	19/18
28	5	40	[illegible]	[illegible]	
30	6	20	6	48	
1					
2					

BATTERY NO. B-1					
OVEN NO.	TIME PUSHED		TIME CHARGED		NOTES
1	7	05			
3	[illegible]		9	00	
5	9	02	9	51	
7	9	53	10	21	
9	10	23	11	03	
11	11	05	11	33	
13	11	35			
15					
17					
19					
21					
23					
25					
27					
29					
31					
2					
4					
6			12	28	
8	12	30	12	53	
10	12	55	1	28	
12	1	30	2	[illegible]	
14	2	10	2	[illegible]	
16	2	40	[illegible]	[illegible]	
18				[illegible]	Pass up
20	[illegible]	40	4	03	
22	4	05	4	[illegible]	
24	4	45	5	18	19/20
26	5	20	5	[illegible]	
28	5	[illegible]	6	[illegible]	
30	[illegible]	30	7	13	
1	7	15	[illegible]	[illegible]	
2					

BATTERY NO. [illegible]					
OVEN NO.	TIME PUSHED		TIME CHARGED		NOTES
1	7	05	[illegible]	[illegible]	11
3	[illegible]	[illegible]	9	18	(4)
5	9	20	10	03	
7	10	05	10	36	
9	10	38	11	13	
11	11	15	11	43	
13	11	45			
15					
17					
19					
21					
23					
25					
27					
29					
31					
2					
4			12	08	
6	12	10	12	35	(2)
8	12	40	1	[illegible]	
10	1	[illegible]	1	[illegible]	
12	1	40	2	[illegible]	
14	2	[illegible]	2	[illegible]	
16	2	50	[illegible]		
18	3	[illegible]	[illegible]	[illegible]	
20	[illegible]	[illegible]	4	[illegible]	
22	4	35	[illegible]	[illegible]	
24	[illegible]	[illegible]	[illegible]	[illegible]	21/21
26	5	[illegible]	6	[illegible]	
28	6	10	6	38	
30	6	40	7	[illegible]	
1	7	35	[illegible]	[illegible]	
2					

REMARKS:

P & C
1-38 38
2-21 21

STEEL CORPORATION
E AND COAL CHEMICAL WORKS

PUSHING AND CHARGING REPORT

UNIT NO. 1

12 Hrs. Beginning 12:00 P M

Date 7-30-78

BATTERY NO. A-1					BATTERY NO. B-1					BATTERY NO. A-2				
OVEN NO.	TIME PUSHED		TIME CHARGED		NOTES	OVEN NO.	TIME PUSHED		TIME CHARGED		NOTES	OVEN NO.	TIME PUSHED		TIME CHARGED		NOTES
1						1						1					
3						3						3					
5						5						5					
7						7						7					
9						9						9					
11						11						11					
13						13			12	00		13			12	10	
15			12	00		15	12	02	12	30		15	12	12	12	40	
17	12	22	12	50		17	12	32	1	00		17	12	42	1	10	
19	12	52	1	20		19	1	02	1	30		19	1	12	1	40	
21	1	22	1	50		21	1	32	2	10		21	1	42	2	20	
23	1	52	2	30		23	2	12	2	40	+B-18/1	23	2	22	2	50	
25	2	32	3	00		25	2	42	3	10		25	2	52	3	20	
27	3	02	3	30		27	3	12	3	40		27	3	22	3	50	
29	3	32	4	12		29	3	42	4	22		29	3	52	4	32	
31	4	14	4	42		31	4	24	5	06		31	4	34	5	17	(6)
2	4	44	5	23		2	4	53	5	43		2	5	19	5	53	9-15
4	5	29	6	08		4	5	45	6	18		4	5	55	6	28	21
6	6	10	6	39		6	6	20	6	50		6	6	30	7	—	27
8	6	41	7	12		8	6	52	7	24		8	7	02	7	36	33
10	7	14	7	48		10	7	36	8	—		10	7	38	8	12	39
12	7	50	8	24		12	8	02	8	36		12	8	14	8	48	45
14	8	26	9	—		14	8	38	9	10		14	8	50	9	20	51
16	9	02	9	30		16	9	12	9	38		16	9	22	9	43	57
18	9	32	9	53		18	2	02	6	56		18	9	45	10	17	5-62
20	9	55	10	29		20	10	07	10	41		20	10	19	10	53	68
22	10	31	11	05		22	10	43	11	17		22	10	55	11	29	74
24	11	07	11	41		24	11	19	11	53		24	11	31			80
26	11	43				26	11	55				26					3=83
28						28						28					
30				21		30				22		30					
1						1						1					
2						2	5	08	5	48		2					

REMARKS: 21/21 23/23- 21/21

7--0

1- 44-44

CC-10295 REV. 1/81
03.001.0030

UNITED STATES STEEL CORPORATION
CLAIRTON COKE AND COAL CHEMICAL WORKS

PUSHING AND CHARGING REPORT

UNIT NO. 1

12 Hrs. Beginning 12:00 AM

Date 2/31/78

BATTERY NO. A-1

OVEN NO.	TIME PUSHED		TIME CHARGED		NOTES
1	1	25	[illegible]	[illegible]	
3	2	[illegible]	2	38	
5	2	40	3	18	
7	3	20	3	48	
9	3	58	4	38	
11	4	30	[illegible]	[illegible]	
13	[illegible]	[illegible]	[illegible]	[illegible]	
15	[illegible]	[illegible]	6	18	
17	6	20	6	48	
19	6	50	7	23	
21	7	25	[illegible]	[illegible]	
23		[illegible]	[illegible]	[illegible]	
25		38	9	12	
27	9	14	10	08	
29	10	05	10	50	
31	[illegible]	50	11	35	
2	11	26			
4					
6					
8					
10					
12					
14					
16					
18					
20					
22					
24					
26			12	18	
28	12	20	12	53	
30	12	55	1	23	
1					
2					

BATTERY NO. B-1

OVEN NO.	TIME PUSHED		TIME CHARGED		NOTES
1	1	30	2	15	
3	2	[illegible]	2	48	
5	2	50	3	28	
7	3	30	4	08	
9	4	10	4	38	
11	4	40	[illegible]	[illegible]	
13	[illegible]	[illegible]	[illegible]	48	
15	5	[illegible]	6	28	
17	6	30	7	03	
19	7	05	7	33	
21	7	35			
23		14			
25		50	9	24	
27	9	26	10	13	
29	10	15	11	00	
31	11	02	11	48	
2	11	37			
4					
6					
8					
10					
12					
14					
16					
18					
20					
22					
24					
26			12	28	
28	12	30	1	03	
30	1	05	1	38	
C1	1	40	2	24	
C2	11	50			

BATTERY NO. A-2

OVEN NO.	TIME PUSHED		TIME CHARGED		NOTES
1	1	50	1	57	
3	2	[illegible]	3	02	
5	3	10	3	38	
7	3	40	[illegible]	[illegible]	
9	4	[illegible]	[illegible]	[illegible]	
11	4	50	[illegible]		
13	[illegible]	[illegible]	[illegible]	[illegible]	
15	6	[illegible]	[illegible]	[illegible]	
17	6	40	7	13	
19	7	15	[illegible]	43	
21	7	45	[illegible]	[illegible]	
23		36			
25	9	02	9	32	
27	9	24	10	10	
29	10	42	11	12	
31	11	14			
2		[illegible]			
4					
6					
8					
10					
12					
14					
16					
18					
20					
22					
24			12		
26	12	[illegible]	[illegible]	[illegible]	3
28	12	[illegible]	1	13	
30	1	15	1	[illegible]	
C1	1	57	2	[illegible]	
C2					

REMARKS: 19 19 21 20 20 20

40/60 34/54

STEEL CORPORATION
OKE AND COAL CHEMICAL WORKS

PUSHING AND CHARGING REPORT

UNIT NO. _____

12 Hrs. Beginning 12:00 P M

Date 7-31-78

BATTERY NO. A-1

OVEN NO.	TIME PUSHED		TIME CHARGED		NOTES
1	8	54	9	40	
3	9	42	10	13	
5	10	15	10	49	
7	10	51	11	26	
9	11	28			
11					
13					
15					
17					
19					
21					
23					
25					
27					
29					
31					
2			12	11	
4	12	13	1	05	1213 AM 8/1
6	1	07	1	56	
8	1	58	2	35	
10	2	37	3	12	
12	3	14	3	50	
14	3	52	4	24	
16	4	26	5	01	
18	5	03	5	29	19
20	5	31	6	02	
22	6	04	6	32	19
24	6	34	7	03	
26	7	05	7	39	
28	7	41	8	16	
30	8	18	8	52	
1					
2					

BATTERY NO. B-1

OVEN NO.	TIME PUSHED		TIME CHARGED		NOTES
1	9	02	9	50	
3	9	52	10	25	
5	10	27	11	02	
7	11	04	11	38	
9	11	40			
11					
13					
15					
17					
19					
21					
23					
25					
27					
29					
31					
2			12	20	
4	12	22	1	20	
6	1	25	[illegible]	[illegible]	
8			2	45	
10	2	47	3	24	
12	3	26	4	00	20 / 21
14	4	02	4	36	
16	4	38	5	10	
18	2	58	5	14	
20	5	41	6	12	
22	6	14	6	42	
24	6	44	7	15	
26	7	17	7	51	
28	7	53	8	28	
30	8	30	9	10	
C 1	9	12	9	57	
C 2			12	24	

BATTERY NO. A-2

OVEN NO.	TIME PUSHED		TIME CHARGED		NOTES
1	9	22	10	01	
3	10	03	10	37	
5	10	39	11	14	
7	11	16	11	48	
9	11	50			
11					
13					
15					
17					
19					
21					
23					
25					
27					
29					
31			[illegible]		
2	[illegible]	[illegible]	[illegible]	[illegible]	
4	12	[illegible]	1	37	
6	1	40	2	06	
8	2	28	3	00	
10	3	02	3	38	
12	3	40	4	10	
14	4	14	4	48	21 / 21
16	4	50	5	19	
18	5	21	5	51	
20	5	53	6	22	
22	6	24	6	52	
24	6	54	7	27	
26	7	29	8	04	
28	8	06	8	40	
30	8	42	9	30	
C 1	9	32	10	09	
2					

REMARKS:

	P	C
1 -	39	40
2 -	21	21

STEEL CORPORATION
COKE AND COAL CHEMICAL WORKS

PUSHING AND CHARGING REPORT

UNIT NO._____

12 Hrs. Beginning 12:00 AM Midnite to 1200P

Date 8-1-78

BATTERY NO. A-1

OVEN NO.	TIME PUSHED		TIME CHARGED		NOTES
1					
3					
5					
7					
9			12	08	
11	12	10	12	37	
13	12	39	1	08	
15	1	10	1	38	
17	1	40	2	13	
19	2	15	2	53	
21	2	55	3	25	
23	3	27	4	03	
25	4	05	4	39	
27	4	41	5	18	
28	5	20	5	48	
31	5	50	6	28	
2	6	30	7	18	
4	7	20	7	48	
6	7	50	8	24	
8	8	26	9	08	
10	9	10	9	57	
12	9	59	10	45	
14	10	45	11	19	
16	11	21	11	49	
18	11	51			
20					(20)
22					
24					
26					
28					
30					
1					
2					

BATTERY NO. B-1

OVEN NO.	TIME PUSHED		TIME CHARGED		NOTES
1					
3					
5					
7					
9			12	18	
11	12	20	12	47	
13	12	49	1	18	
15	1	20	1	48	
17	1	50	2	28	
19	2	30	3	03	
21	3	05	3	36	
23	3	38	4	15	
25	4	17	4	51	
27	4	53	5	28	
29	5	30	6	08	
31	6	10	6	38	
2	6	40	6	48	
4	7	30	8	00	
6	8	02	8	38	
8	8	40	9	20	
10	9	22	10	18	
12	10	26	10	54	
14	10	56	11	28	
16	11	30			
18					
20					(19)
22					
24					
26					
28					
30					
1					
2	6	50	7	28	

BATTERY NO. A-2

OVEN NO.	TIME PUSHED		TIME CHARGED		NOTES
1					
3					
5					
7					
9			12	2[illegible]	
11	12	30	12	57	6
13	12	59	1	28	12
15	1	30	2	03	18
17	2	03	2	38	24
19	2	40	3	14	30
21	3	16	3	47	36
23	3	49	4	27	[illegible]
25	4	29	5	08	48
27	5	10	5	38	54
29	5	40	6	18	60
31	6	20	7	08	[illegible]
2	7	10	7	38	[illegible]
4	7	40	8	12	[illegible]
6	8	14	8	57	
8	8	59	9	42	
10	9	49	10	35	
12	10	38	11	07	
14	11	09	11	39	
16	11	41			
18					
20					
22					
24					
26					
28					
30					
1					
2					

REMARKS: 20 20 20 20 19 19

40/59 40/59

CC-10285 REV. 1-81
08.001.0020

UNITED STATES STEEL CORPORATION
CLAIRTON COKE AND COAL CHEMICAL WORKS

PUSHING AND CHARGING REPORT

UNIT NO. _____

12 Hrs. Beginning 12:00 PM

Date 8-1-78

BATTERY NO. A-1

OVEN NO.	TIME PUSHED		TIME CHARGED		NOTES
1	3	31	4	12	
3	4	14	4	44	
5	4	50	5	22	
7	5	24	5	52	
9	5	54	6	27	
11	6	29	7	08	
13	7	10	7	53	
15	7	55	8	43	
17	8	45	9	14	
19	9	16	9	44	
21	9	46	10	15	
23	10	17	10	45	
25	10	47	11	12	
27	11	15			
29					
31					
2					
4					
6					
8					
10					
12					
14					
16					
18			12	19	
20	12	20	12	49	20
22	12	51	1	27	20
24	1	25	1	56	
26	1	58	2	28	
28	2	30	3	00	
30	3	02	3	29	
1					
2					

BATTERY NO. B-1

OVEN NO.	TIME PUSHED		TIME CHARGED		NOTES
1	3	38	4	24	
3	4	26	5	02	
5	5	04	5	32	
7	5	34	6	03	
9	6	05	6	39	
11	6	41	7	23	
13	7	25	8	13	
15	8	15	8	54	
17	8	56	9	24	
19	9	26	9	54	
21	9	56	10	25	
23	10	27	10	55	
25	10	57	11	23	
27	11	25			
29					
31					
2					
4					
6					
8					
10					
12					
14					
16			12	00	
18	12	02	12	28	
20	12	30	1	03	22
22	1	05	1	33	22
24	1	35	2	08	
26	2	10	2	38	
28	2	40	3	10	
30	3	12	3	46	
31	3	48	4	31	
2					

BATTERY NO. A-2

OVEN NO.	TIME PUSHED		TIME CHARGED		NOTES
1	3	58	4	36	
3	4	38	5	12	
5	5	14	5	42	
7	5	44	6	15	
9	6	17	6	51	
11	6	53	7	35	
13	7	40	8	28	
15	8	30	9	04	
17	9	06	9	34	
19	9	36	10	05	
21	10	07	10	35	
23	10	37	11	03	
25	11	05	11	33	
27	11	35			
29					
31					
2					
4					
6					
8					
10					
12					
14					
16			12	06	
18	12	08	12	39	
20	12	41	1	13	
22	1	15	1	48	22
24	1	45	2	18	22
26	2	20	2	50	
28	2	52	3	15	
30	3	21	4	00	
31	4	02	4	43	
2					

REMARKS:

	P	C
1	42	42
2	22	22

...ES STEEL CORPORATION
...M COKE AND COAL CHEMICAL WORKS

PUSHING AND CHARGING REPORT

UNIT NO. _____

12 Hrs. Beginning 12:00 PM

Date 8-2-78

BATTERY NO. A-1

OVEN NO.	TIME PUSHED		TIME CHARGED		NOTES
1					
3					
5			12	27	
7	12	29	12	57	
9	12	59	1	28	
11	1	30	2	00	
13	2	02	2	30	
15	2	32	3	02	
17	3	05	3	39	
19	3	41	4	12	
21	4	14	4	48	
23	4	50	5	25	
25	5	27	6	02	
27	6	04	6	32	
29	6	34	7	03	
31	7	05	7	39	
2	7	41	8	24	
4	8	26	9	01	
6	9	03	9	37	
8	9	39	10	14	
10	10	16	10	50	
12	10	52	11	27	
14	11	29			
16					
18					
20					
22					
24					
26					
28					
30					
1					
2					

20/20

BATTERY NO. B-1

OVEN NO.	TIME PUSHED		TIME CHARGED		NOTES
1					
3			12	09	
5	12	11	12	37	
7	12	39	1	07	
9	1	09	1	39	
11	1	41	2	10	
13	2	12	2	41	
15	2	43	3	15	
17	3	17	3	51	
19	3	53	4	24	
21	4	26	5	01	
23	5	03	5	37	
25	5	39	6	12	
27	6	14	6	42	
29	6	44	7	15	
31	7	17	7	51	
2	7	53	8	36	
4	8	38	9	13	
6	9	15	9	49	
8	9	51	10	26	HARD PUSH
10	10	28	11	03	
12	11	05	11	39	
14	11	41			
16					
18					
20					
22					
24					
26					
28					
30					
1					
2	8	02	8	43	

22/22

BATTERY NO. A-2

OVEN NO.	TIME PUSHED		TIME CHARGED		NOTES
1					
3			12	17	
5	12	19	12	47	
7	12	49	1	18	
9	1	20	1	50	
11	1	52	2	20	
13	2	22	2	53	
15	2	55	3	27	
17	3	29	4	00	
19	4	02	4	36	2
21	4	38	5	13	
23	5	15	5	49	
25	5	51	6	22	
27	6	24	6	57	
29	6	54	7	27	
31	7	29	8	12	
2	8	14	8	48	
4	8	50	9	25	
6	9	27	10	02	
8	10	04	10	38	
10	10	40	11	15	
12	11	17	11	49	
14	11	51			
16					
18					
20					
22					
24					
26					
28					
30					
1					
2					

21/21

REMARKS:

	P	C
1	42	42
2	21	21

PUSHING AND CHARGING REPORT

UNIT NO. _____

12 Hrs. Beginning 12:00 A M

Date 8-3-75

CORPORATION

COAL CHEMICAL WORKS

BATTERY NO. A-1

OVEN NO.	TIME PUSHED		TIME CHARGED		NOTES
1	5	33	6	18	AM
3	6	20	6	48	✓
5	6	50	7	20	
7	7	22	7	52	✓
9	7	55	8	46	
11	8	48	9	27	
13	9	29	10	01	
15	10	07	10	30	
17	10	43	11	16	
19	11	18	11	45	
21	11	47			
23					
25					
27					
29					
31					
2					
4					
6					
8					
10					
12					
14			12	07	
16	12	09	12	44	
18	12	46	1	16	
20	1	18	1	52	
22	1	54	3	00	
24	3	02	3	36	
26	3	38	4	10	
28	4	12	4	57	
30	4	59	5	31	
1					
2					

19 / 19 / 19

BATTERY NO. B-1

OVEN NO.	TIME PUSHED		TIME CHARGED		NOTES
1	5	38	6	25	
3	6	27	7	—	
5	7	02	7	32	P
7	7	35	8	26	
9	8	28	9	01	
11	9	03	9	39	
13	9	41	10	52	
15	PASS-UP				
17	10	54	11	56	
19	PASS UP				
21	11	58			
23					
25					
27					
29					
31					
2					
4					
6					
8					
10					
12					
14			12	17	
16	2	04	8	22	
18	STICKER				
20	PASS				
22	2	47	3	10	
24	3	12	3	48	
26	3	50	4	21	
28	4	23	5	09	
30	5	11	5	46	
B-1	5	48	6	30	
2					

16 / 16 / 16

BATTERY NO. A-2

OVEN NO.	TIME PUSHED		TIME CHARGED		NOTES
1	5	58	6	37	9-34
3	6	39	7	10	5-59
5	7	12	7	45	65
7	7	51	8	36	21
9	8	38	9	12	5
11	9	14	9	51	11
13	9	53	10	18	17
15	10	20	11	04	27
17	11	06	11	34	28
19	11	36			
21					
23					
25					
27					
29					
31					
2					
4					
6					
8					
10					
12					
14			12	33	
16	12	35	1	03	(5)
18	1	05	1	36	5-10
20	1	38	2	53	5-15
22	2	55	3	21	7-21
24	3	23	4	01	27
26	4	03	4	[illegible]	33
28	4	37	5	21	34
30	5	23	6	07	45
B-1	6	09	6	42	
2					

19 / 19 / 19

REMARKS: 1 - 2

P 35 + 11 = 54

C 35 + 11 = 54

CC-10295 REV. 1161
03.001.0020

UNITED STATES STEEL CORPORATION
CLAIRTON COKE AND COAL CHEMICAL WORKS

PUSHING AND CHARGING REPORT

UNIT NO. 1

12 Hrs. Beginning 12:00 PM

Date 9-3-72

BATTERY NO. 1						BATTERY NO. 1						BATTERY NO. 2					
OVEN NO.	TIME PUSHED		TIME CHARGED		NOTES	OVEN NO.	TIME PUSHED		TIME CHARGED		NOTES	OVEN NO.	TIME PUSHED		TIME CHARGED		NOTES
1						1						1					
3						3						3					
5						5						5					
7						7						7					
9						9						9					
11						11						11					
13						13						13					
15						15						15					
17						17						17					
19						19						19			12	08	
21			12	18		21			12	3[illegible]		21	12	10	12	45	
23	12	20	1	[illegible]		23	12	37	1	10		23	12	47	[illegible]	[illegible]	
25	1	02	1	30		25	1	12	1	45		25	1	29	1	53	
27	1	32	2	09		27	1	47	2	12		27	1	55	2	24	
29	2	06	2	3[illegible]		29	2	14	2	46		29	2	26	3	[illegible]	
31	2	38	3	16		31	2	48	3	25		31	3	02	3	53	
2	3	18	4	00		2	3	30	4	12		2	3	55	4	24	
4	4	02	4	36		4	4	14	4	48		4	4	26	5	01	
6	4	38	5	13		6	4	50	5	25		6	5	03	5	38	
8	5	15	6	02	19	8	5	27	6	12		8	5	40	6	22	
10	6	24	6	52	19	10	6	14	7	03	19	10	6	20	7	15	
12	6	54	7	27		12	7	05	7	39		12	7	17	7	51	
14	7	29	8	04		14	7	41	8	12	19	14	7	53	8	[illegible]	
16	8	06	8	31		16						16	8	21	8	5[illegible]	19
18	8	33	9	02		18	8	45	9	14		18	8	57	9	[illegible]	
20	9	04	9	[illegible]		20	9	16	9	[illegible]		20	9	[illegible]	[illegible]	[illegible]	
22	9	40	10	17		22	[illegible]	52	10	29		22	10	23	10	40	
24	10	21	11	05		24	10	31	11	13		24	[illegible]	42	11	33	
26	11	05	11	33		26	11	15	11	48		26	11	25			
28	11	35				28	11	50				28					
30						30						30					
1						1						1					
2						2	3	43	4	19		2					

REMARKS:

Condition of Oven

CC-10295 REV. 1-181
03.001.0020

UNITED STATES STEEL CORPORATION
CLAIRTON COKE AND COAL CHEMICAL WORKS

PUSHING AND CHARGING REPORT

UNIT NO. 1

12 Hrs. Beginning 12:00 AM

Date 5-4-78

BATTERY NO. A3-1					
OVEN NO.	TIME PUSHED		TIME CHARGED		NOTES
1	12	51	1	41	
3	1	43	2	07	
5	2	09	2	44	
7	2	46	3	18	
9	3	20	3	48	
11	3	50	4	24	
13	4	26	5	—	
15	5	02	5	36	
17	5	38	6	10	
19	6	12	6	40	
21	6	42	7	12	
23	7	14	8	08	
25	8	10	8	43	
27	8	45	9	28	
29	9	30	10	03	
31	10	05	10	33	
2	10	35	11	33	
4	11	35			
6					
8					
10					
12					
14					
16					
18					
20					19 (19)
22					
24					
26					
28			12	17	
30	12	19	12	49	
1					
2					

BATTERY NO. B3-1					
OVEN NO.	TIME PUSHED		TIME CHARGED		NOTES
1	12	59	1	45	
3	1	47	2	18	
5	2	20	2	54	
7	2	56	3	28	
9	3	30	4	—	
11	4	02	4	36	
13	4	38	5	12	
15	5	14	5	48	
17	5	50	6	20	
19	6	22	6	50	
21	6	52	7	17	
23	7	30	8	23	
25	8	25	9	03	
27	9	05	9	38	
29	9	40	10	13	
31	10	15	10	53	
2	10	55	11	13	
4	11	45			
6					
8					
10					
12					
14					22 (21)
16	7	19			
18					
20					
22					
24					
26					
28			12	29	
30	12	31	1	07	
C-1	1	09	1	48	
2	11	15	11	45	

BATTERY NO. A3-2					
OVEN NO.	TIME PUSHED		TIME CHARGED		NOTES
1	1	19	1	54	9-17
3	1	56	2	29	5-32
5	2	31	3	08	25
7	3	08	3	38	34
9	3	40	4	12	40
11	4	14	4	48	46
13	4	50	5	24	52
15	5	26	6	—	58
17	6	02	6	30	64
19	6	32	7	—	70
21	7	02	7	40	76
23	7	42	8	33	82
25	8	35	9	18	(6)
27	9	20	9	18	
29	9	50	10	23	
31	10	25	11	23	
2	11	25	11	53	
4	11	55			
6					
8					
10					
12					
14					21
16					21
18					
20					
22					
24					
26			12	06	
28	12	08	12	39	(2)
30	12	41	1	29	3
C-1	1	31	1	59	
2					

REMARKS:

STEEL CORPORATION
COKE AND COAL CHEMICAL WORKS

PUSHING AND CHARGING REPORT

UNIT NO. 1

12 Hrs. Beginning 12:00 P M

Date 8-4-78

BATTERY NO. A-1

OVEN NO.	TIME PUSHED		TIME CHARGED		NOTES
1	7	25	8	16	
3	8	18	8	52	
5	8	54	9	20	
7	9	22	9	50	
9	9	52	10	26	
11	10	28	11	03	
13	11	05	11	39	
15	11	41			
17					
19					
21					
23					
25					
27					
29					
31					
2					
4			12	08	
6	12	10	12	48	
8	12	50	1	28	
10	1	30	1	57	
12	1	58	2	28	
14	2	30	3	08	
16	3	10	3	36	
18	3	38	4	00	
20	4	02	4	36	
22	4	38	5	11	
24	5	13	5	51	
26	5	43	6	14	
28	6	16	6	50	
30	6	52	7	23	
1					
2					

BATTERY NO. B-1

OVEN NO.	TIME PUSHED		TIME CHARGED		NOTES
1	7	35	8	25	
3	8	30	9	02	
5	9	02	9	30	
7	9	32	10	02	
9	10	04	10	38	
11	10	40	11	15	
13	11	17	11	51	
15	11	53			
17					
19					
21					
23					
25					
27					
29					
31					
2					
4			12	18	
6	12	20	1	08	
8	1	10	1	48	
10	1	50	2	08	
12	2	10	2	38	
14	2	40	3	16	
16	—	—	1	54	
18	3	48	4	12	
20	4	14	4	48	
22	4	50	5	21	
24	5	23	5	51	
26	5	53	6	26	
28	6	25	7	03	
30	7	05	7	43	
C 1	7	45	8	35	
2					

BATTERY NO. A-2

OVEN NO.	TIME PUSHED		TIME CHARGED		NOTES
1	7	55	8	40	
3	8	42	9	10	
5	9	12	9	40	
7	9	42	10	14	
9	10	16	10	50	
11	10	52	11	27	
13	11	29			
15					
17					
19					
21					
23					
25					
27					
29					
31					
2					
4			12	33	
6	12	35	1	18	
8	1	20	1	53	
10	1	55	2	18	
12	2	20	2	48	
14	2	50	3	23	
16	3	25	3	56	
18	3	58	4	24	
20	4	26	5	01	
22	5	03	5	31	
24	5	33	6	02	
26	6	04	6	35	
28	6	40	7	13	
30	7	15	7	04	
8 1	7	06	7	46	
2					

REMARKS:

21 21 21

CC-1 161
03

...YES STEEL CORPORATION
...RTON COKE AND COAL CHEMICAL WORKS

PUSHING AND CHARGING REPORT

UNIT NO. 1

12 Hrs. Beginning 12:00 AM

Date 8-5-78

BATTERY NO. A3-1					
OVEN NO.	TIME PUSHED		TIME CHARGED		NOTES
1					
3					
5					
7					
9					
11					
13					
15			12	22	
17	12	24	12	56	
19	12	58	1	26	
21	1	30	2	08	
23	2	10	2	40	
25	2	42	3	10	
27	3	12	3	40	
29	3	42	4	12	
31	4	14	4	48	
2	4	50	5	41	
4	5	43	6	17	
6	6	19	6	53	
8	6	55	7	39	
10	7	31	8	13	
12	8	15	[illegible]	43	
14	8	[illegible]	[illegible]	18	
16	9	20	[illegible]	48	
18	9	50	[illegible]	23	
20	10	25	10	53	
22	10	55	11	28	
24	11	30			20/20
26					
28					
30					
1					
2					

BATTERY NO. B3-1					
OVEN NO.	TIME PUSHED		TIME CHARGED		NOTES
1					
3					
5					
7					
9					
11					
13					
15			12	32	
17	12	34	1	08	
19	1	10	1	40	
21	1	42	2	18	
23	2	20	2	50	
25	2	52	3	20	
27	3	22	3	50	
29	3	52	4	24	
31	4	26	5	17	
2	5	12	5	53	
4	5	55	6	29	
6	6	31	7	05	
8	7	07	7	41	
10	7	43	8	23	
12	8	25	8	53	
14	8	55	9	28	
16	9	30	10	03	
18	10	05	[illegible]	35	
20	[illegible]	35	11	03	21/21
22	11	05	11	38	
24	11	40			
26					
28					
30					
1					
2	5	19	5	59	

BATTERY NO. A3-2					
OVEN NO.	TIME PUSHED		TIME CHARGED		NOTES
1					
3					
5					
7					
9					
11					
13			12	09	
15	12	14	12	43	3
17	12	45	1	18	9
19	1	20	1	52	15
21	1	54	2	28	21
23	2	30	3	—	27
25	3	02	3	30	33
27	3	32	4	—	39
29	4	02	4	36	45
31	4	38	5	09	51
2	5	31	6	05	9-60
4	6	07	6	46	[illegible]
6	6	43	7	17	72
8	7	19	7	53	78
10	7	55	8	33	1
12	8	35	9	08	
14	9	10	[illegible]	[illegible]	
16	9	40	[illegible]	[illegible]	
18	[illegible]	15	[illegible]	[illegible]	21/21
20	10	45	[illegible]	[illegible]	
22	11	15	11	53	
24	11	55			
26					
28					
30					
1					
2					

REMARKS:

STEEL CORPORATION
...ION COKE AND COAL CHEMICAL WORKS

PUSHING AND CHARGING REPORT

UNIT NO. _____

12 Hrs. Beginning 12:00 P M

Date 8-5-7[illegible]

BATTERY NO. A51

OVEN NO.	TIME PUSHED		TIME CHARGED		NOTES
1	1	50	2	48	
3	2	50	3	22	
5	3	25	[illegible]	[illegible]	
7	3	[illegible]	4	35	
9	4	37	5	06	
11	5	08	5	40	
13	5	44	6	18	
15	6	20	6	54	
17	6	54	7	26	
19	7	28	7	56	
21	7	58	8	30	
23	8	32	9	06	
25	9	08	9	42	
27	9	44	10	18	
29	10	20	[illegible]	[illegible]	
31	10	[illegible]	[illegible]	[illegible]	
2	11	[illegible]			
4					
6					
8					
10					
12					
14					
16					
18					
20					
22					
24			12	08	
26	12	10	[illegible]	[illegible]	
28	12	[illegible]	1	18	
30	1	15	1	48	
1	X				
2					

BATTERY NO. BS 1

OVEN NO.	TIME PUSHED		TIME CHARGED		NOTES
1	2	10	3	[illegible]	
3	3	05	3	[illegible]	
5	3	35	4	13	
7	4	15	4	43	
9	4	45	5	18	
11	5	[illegible]	5	54	
13	5	56	6	30	
15	6	30	7	06	
17	7	08	7	[illegible]	
19	7	38	8	06	
21	8	08	8	42	
23	8	44	9	18	
25	9	[illegible]	9	[illegible]	
27	9	55	10	30	
29	10	30	11	[illegible]	
31	11	07	11	36	
2	11	38			
4					
6					
8					
10					
12					
14					
16					
18					
20					
22					
24			12	12	
26	12	[illegible]			
28	[illegible]		1	[illegible]	
30	1	30	2	18	
C 1	2	25	2	48	
C 2	11	56			

BATTERY NO. A5 3

OVEN NO.	TIME PUSHED		TIME CHARGED		NOTES
1	2	30	2	[illegible]	
3	2	[illegible]	[illegible]	[illegible]	
5	[illegible]	[illegible]	4	[illegible]	
7	4	[illegible]	4	54	
9	4	56	5	[illegible]	
11	5	32	6	06	
13	6	08	6	42	
15	6	44	7	16	
17	7	18	7	[illegible]	
19	7	48	8	18	
21	8	30	8	54	
23	8	56	9	[illegible]	
25	9	[illegible]	10	[illegible]	
27	10	08	10	[illegible]	
29	10	[illegible]	[illegible]	[illegible]	
31	[illegible]	18			
2					
4					
6					
8					
10					
12					
14					
16					
18					
20					
22					
24					
26	12	[illegible]	1	[illegible]	
28	1	[illegible]	[illegible]		
30	1	[illegible]	2	38	
B	2	40	[illegible]	[illegible]	
2					

REMARKS:

	P	C
1	42	41
2	20	20

Run 1 BAP

SAMPLE IDENTIFICATION LOG

SAMPLE ~~EPA~~ Number	Sample Location	Run	Contents	Comments	Collected By
BAP-1-PR	(2 bottles) 800	1	Probe - front filter rinse	MC	
-1-PF	—	1	Filter	Filter	
-1-XR	? 150gm	1	XAD-2 Resin	Resin only	
-1-CD	500mls	1	module condensate	water etc.	
-1-MR	300	1	" rinse	MC	
BAP-2-PR	200	2	Probe rinse	MC	
-PF	—	2	Filter	Filter	
-XR	150gm Resin	2	XAD-2	resin	
-CD	non collected	2	Module condensate	—	
-MR		2	Module rinse	MC	
BAP-3-PR	100	3	Probe filter rinse	MC	
PF	—	3	Filter	filter	
XR	150gm	3	XAD-2 resin	resin	
CD	non	3	collected	—	
MR	400	3	Module rinse	MC	
BAP-4-PR	150	4	Probe filter rinse	MC	
-PF	—	4	Filter	Filter	
-XR	150gm	4	XAD-2	resin	
-CD	non	4	collected	—	
-MR	200	4	Module rinse	MC	
BAP-5-PR	200	5	Probe filter rinse	MC	
-PF	—	5	Filter	Filter	
-XR	150gm	5	XAD-2	resin	
-CD	1	5	Fail ?	H_2O	
-MR	550	5	Module Rinse	MC	
BAP-5AB-PR	25	5	Probe filter rinse	MC	
-PF	—	5	Filter	Filter	
-XR	150	5	Resin XAD-2	resin	
-CD	5 mlts	5	Module condensate	H_2O	
-MR	800	5	Module rinse	MC	

#2 BAP

SAMPLE IDENTIFICATION LOG

SAMPLE ~~EPA~~ Number	Sample Location	Run	Contents	Comments	Collected By
BAP-6-PR	100	6	Probe, filter rinse	MC	
-PF	—	6	Filter	Filter	
-XR	150	6	XAD-2	resin	
-CD	none	6	collected	—	
-MR	1000	6	Module rinse	MC	
BAP-7-PR	500	7	Probe filter rinse	MC	
PF	—	7	filter	filter	
XR	150	7	XAD-2	resin	
CD	none	7	collected	—	
MR	600	7	Module rinse	MC	
MRA	900	7	Modal rinse	acetone	
-32-CC		7			
-32-SR		7			
32-CICD	500	7	Combined impg condensate	H_2O	
32-CIA	500	7	" " rinse	acetone	
32-CIMC	350	7	Combined impg rinse	MC	
BAP-7A-PR	50	7	Probe filter rinse	MC	
PF	—	7	Filter	Filter	
XR	150	7	XAD-2	resin	
CD	none	7	Module condensate	none	
MR	600	7	Module rinse	MC	
5-7A-CC	2 bottles	7			
SG		7			
MRA	400	7	Module rinse	acetone	
CICD	600	7	Combined Impg. cond.	H_2O	
CIA	150	7	" " rinse	acetone	
CIMC	150	7	"	MC	

Run 1 - BSO

SAMPLE IDENTIFICATION LOG

SAMPLE ~~EPA~~ Number	Sample Location	Run	Contents	Mark Comments	Collected By
Common sample			~~Vent Pipe~~	MC	8-2
BAP/BSO-1-VMC	50	1	Vent Pipe	MC	
" -1-VB	40	1	~~Common Nozzle~~	Benzene	
" -1-NMC	150	1	Common Nozzle	MC	
" -1-NB	40	1	"	Benzene	
BSO-1-PICD	5	1	Probe / Impinger Condensate		
PIA (2 bottles)	700	1	" " Rinse	Acetone	
PIB	300	1	Probe / Impg Rinse	Benzene	
PF	—	1	Filter	Filter	
1-CICDAR	700	1	Combined Impg condensate Rinse (acetone)		
CIB	100	1	" " "	Benzene	
1-CIMCR	150	1	" " "	ME Rinse	
SG					
Common sample					
BAP/BSO-2-VMC	120	2	Vent pipe rinse	MC	
2-VB	100	2	" " "	Benzene	
2-NMC	100	2	Common nozzle rinse	MC	
2-NB	80	2	" "	Benzene	
BSO-1-PICD	— non —		collected no H_2O		
PIA	500	2	Probe, Impg rinse	acetone	
PIB	350	2	" " rinse	Benzene	
PF	—	2	Filter	Filter	
CIA	300	2	Combined impg rinse	Acetone	
CIB	300	2	" " "	benzene	
CICD (solids)	1000	2	Combined impg condensate	H_2O	
[redacted]		2			

#2 BSO

SAMPLE IDENTIFICATION LOG

SAMPLE ~~EPA~~ Number	Sample Location	Run	Contents	Comments	Collected By
Common samples					
BAP/BSO-3-VMC	250	3	Vent Pipe rinse	MC	
-VB	150	3	" " "	Benzene	
-NMC	150	3	Nozzle "	MC	
-NB	100	3	" "	Benzene	
BSO-3-PIA	(2 bottles) 800	3	Probe Impg rinse	Acetone	
PIB	250	3	" " "	Benzene	
PF	—	3	P. filter	Filter	
CICD	500	3	Combined impg condensate	H_2O	
CIA	(2 bottles) 700	3	" " rinse	Acetone	
CIB	500	3	" " rinse	Benzene	
Charcoal	(2 bottles)	3	Combined BSO runs 1, 2, 3	Charcoal	
~~BSA~~		~~3~~		Acetone	
~~PIA~~		~~3~~			
~~charcoal~~		~~3~~			
Common samples					
BAP/BSO-4-VMC	300	4	Vent pipe rinse	MC	
-VB	100	4	" " "	Benzene	
-NMC	200	4	Nozzle rinse	MC	
-NB	150	4	" "	Benzene	
BSO-4-PIA	750	4	Probe Impg rinse	acetone	
PIB	150	4	" " "	Benzene	
PF	—	4	Filter	Filter	
CICD	1000	4	Combined impg condensate	H_2O	
CIA	800	4	" " rinse	acetone	
CIB	200	4	" " "	Benzene	

#3 BSO

SAMPLE IDENTIFICATION LOG

SAMPLE ~~EPA~~ Number	Sample Location	Run	Contents	Comments	Collected By
Common Sampler					
BAP/BSO-5-VMC	150	5	Vent Pipe rinse	MC	
- VB	50	5	" " "	Benzene	
- NMC	50	5	Nozzle "	MC	
- NB	50	5	" "	Benzene	
BSO-5-PIA	200	5	Probe, Impg rinse	Acetone	
PIB	350	5	" " "	Benzene	
PF	—	5	Filter	Filter	
CICD	(2 bottles) 1000	5	Combined impg condensate	H_2O	
CIA	200	5	" " rinse	Acetone	
CIB	200	5	" " rinse	Benzene	
Ambient air sampler					
BSO-SAB-PIA	150	5	Probe, Impg rinse	Acetone	
-PIB	50	5	" " "	Benzene	
-PF	—	5	Filter	Filter	
-CICD	600	5	Combined Impg Cond.	H_2O	
-CIA	100	5	" " rinse	Acetone	
-CIB	50	5	" " rinse	Benzene	
-CICDX	50	5	knockout impg condensate	H_2O	
Common Sampler					
BAP/BSO-6-VMC	250	6	Vent pipe rinse	MC	
-VB	200	6	" " "	Benzene	
-NMC	100	6	Common Nozzle rinse	MC	
-NB	50	6	" " "	Benzene	
BSO-6--PIA	450	6	Probe/impg rinse	acetone	
PIB	200	6	" " "	benzene	
PF	—	6	Filter	Filter	
CICD	1000	6	Combined impg cond.	H_2O	
CIA	200	6	" " rinse	acetone	
CIB	150	6	" " "	benzene	

no ambient on 6

#4
BSO

SAMPLE IDENTIFICATION LOG

Sample ~~EPA~~ Number	Sample Location	Run	Contents	Comments
Common sample				
BAP/BSO-7-VMC	150	7	Vent Pipe rinse	MC
-VB	100	7	" " "	Benzene
-NMC	100	7	Nozzle rinse	MC
-NB	75	7	" "	Benzene
BSO-7-PIA	450	7	Probe impg rinse	acetone
PIB	200	7	" " "	benzene
PF	—	7	Filter	Filter
CICD	1000	7	Combined impg. Cond.	H_2O
CIA	250	7	" " rinse	acetone
CIB	150	7	" " rinse	benzene
CD	20	7	Knockout impg cond.	H_2O
BSO-37-SG		7	Silica gel run 3→7	SG
-37-CC		7	Charcoal run 3→7	charcoal
Ambient air sample				
BSO-7A-PIA	100	7	Probe impg rinse	acetone
PIB	100	7	" " "	benzene
PF	—	7	Filter	Filter
CICD	500	7	Combined impg Condensate	H_2O
CIA	100	7	" " rinse	acetone
CIB	100	7	rinse	benzene
SG		7	5→7 combined	SG
CC		7	5→7 combined	charcoal
CD	10	7	knockout impg cond.	H_2O

SAMPLE IDENTIFICATION LOG

BSO TEST 1, 2

SAMPLE ~~EPA~~ Number	~~Sample~~ Location	DATE ~~Run~~	~~Contents~~ SAMPLE	Comments	Collected By
BAP/BSO-1-VMC	Coke Oven Vent	8/2	Vent Pipe	$MeCl_2$	DM ✓
" -1-VB	" " "	"	" "	Benzene	" ✓
" -1-NMC	" " "	"	Common Nozzle	$MeCl_2$	" ✓
" -1-NB	" " "	"	" "	Benzene	" ✓
BSO-1-PICD	" " "	"	Probe/Impinger Condensate		" ✓
" -1-PIA	" " "	"	" " Rinse	Acetone	"
" -1-PIB	" " "	"	" " "	Benzene	DM ✓
" -1-PF	" " "	"	Filter		DM ✓
" -1-CICD ~~MCR~~ A	" " "	"	Combined Impinger condensate + Rinse	Acetone ~~$MeCl_2$~~	DM ✓
" -1-CIB	" " "	"	Combined Impinger Rinse	Benzene	" ✓
" -1-SG	" " "	"	Silica Gel	(Not Collected)	
" -2-PICD	" " "	"	Probe/Impinger Condensate	(None Collected)	D.M
" -2-PIA	" " "	"	" " Rinse	Acetone	JMR ✓
" -2-PIB	" " "	"	" " "	Benzene	" ✓
" -2-PF	" " "	"	Filter		" ✓
~~" -2-CICD ~~MCR~~~~	~~" " "	"	Combined Impinger Condensate + Rinses~~	~~No rinse $MeCl_2$~~	See below
" -2-CIB	" " "	"	" " Rinse	Benzene	JMR ✓
~~" -2-SG~~	~~" " "	"	Silica Gel~~	—	Dropped GR
BSO/~~BAP~~-2-VMC	" " "	"	Vent Pipe	$MeCl_2$	J.MR ✓
BSO/~~BAP~~-2-VB	" " "	"	" "	Benzene	" ✓
" -2-NMC	" " "	"	Nozzle	$MeCl_2$	" ✓
" -2-NB	" " "	"	"	Benzene	" ✓
BSO-1-PIA	" " "	"	Probe Imp Rinse	Acetone	DM 2 of 2
" -1-CI ~~MCR~~	" " "	"	Combined Impinger Rinse	$MeCl_2$	DM ✓
" -2-CICD	" " "	"	" " Condensate	No Rinse	JMR ✓
" -2-CIA	" " "	"	" " ~~Rin~~ Rinse	Acetone	JMR ✓

Note: Back Up filter holder only rinsed w $MeCl_2$ & Benzene No Acetone DM

SAMPLE IDENTIFICATION LOG

BSO – TEST 3, 4

SAMPLE ~~EPA~~ Number	Sample Location	Run	DATE	Contents (SAMPLE)	Comments	Collected By
BSO-3-VNC	Coke Oven Vent	8/3		Vent Pipe MeCl2		✓
" -3-VB	"	"		" Benzene		✓
" -3-NNC	"	"		Nozzle MeCl2		✓
" -3-NB	"	"		" Benzene		✓
BSO-3-PIA	"	"		Probe/Imp Rinse Acetone		✓ 1of2
" -3-PIB	"	"		" Benzene		✓
" -3-PF	"	"		Filter		✓
" -3-CICD	"	"		Combined Imp. Condensate (H2O)		✓
" -3-CIA	"	"		" Rinse Acetone		✓ 2of2
" -3-CIB	"	"		" " Benzene		✓
" -123-Charcoal	"	"		Charcoal	2of2	✓
" -3-CIA	"	(Combined		~~Probe~~/Imp Rinse Acetone		1of2 ✓
" -3-PIA	"	"		Probe " Acetone	2of2	✓
" -123-Charcoal		"		Charcoal	1of2	✓
BAP/BSO-4-VNC	"	"		Vent Pipe MeCl2		✓
" -4-VB	"	"		" Benzene		✓
" -4-NNC	"	"		Nozzle MeCl2		✓
" -4-NB	"	"		" Benzene		✓
BSO-4-PIA	"	"		Probe/Imp. Rinse Acetone		✓
" -4-PIB	"	"		" " Benzene		✓
" -4-PF	"	"		Filter		✓
" -4-CICD	"	"		Combined Impinger Condensate		✓
" -4-CIA	"	"		" " Acetone		✓
" -4-CIB	"	"		" " Benzene		✓

15 #1

SAMPLE IDENTIFICATION LOG
BSO TEST 5, 6

MPLE ~~EPA~~ Number	Sample Location	Run	DATE	Contents	Comments	Collected By
1/BSO-5-VMC	Coke Oven Vent	8/4		Vent Pipe MeCl2		DM ✓
" -5-VB	"	"		" Benzene		DM ✓
" -5-NMC	"	"		Nozzle MeCl2		DM ✓
" -5-NB	"	"		" Benzene		DM ✓
BSO-5-PIA	"	"		Probe/Imp Rinse Acetone		DM ✓
" -5-PIB	"	"		" Benzene	Approx 5 ml Cond collected	DM ✓
" -5-PF	"	"		Filter		DM ✓
" -5-CICD	"	"		Combined Impinger Condensate	1 of 2	DM ✓
" -5-CIA	"	"		" " Rinse Acetone		DM ✓
" -5-CIB	"	"		" " " Benzene		DM ✓
" -5-CICD	"			Comb Imp Cond	2 of 2	DM ✓
BAP/BSO-6-VMC	"	"		Vent Pipe MeCl2		✓
" -6-VB	"	"		" " Benzene		✓
" -6-NMC	"	"		Nozzle MeCl2		✓
" -6-NB	"	"		" Benzene		✓
BSO -6-PIA	"	"		Probe/Imp Rinse Acetone		✓
" -6-PIB	"	"		" " Benzene		✓
" -6-PF	"	"		Filter		✓
" -6-CICD	"	"		Combined Imp Condensate		✓
" -6-CIA	"	"		" " Rinse Acetone		✓
" -6-CIB	"	"		" " " Benzene		✓

Note: BSO-5 Cleaned w/ Benzene as first solvent rinse
Benzene OK for first solvent - if H_2O condensate present Benzene will leave H_2O behind and Acetone will pick it up

AMBIENT

SAMPLE IDENTIFICATION LOG

BSO & BAP 5A B

SAMPLE ~~EPA~~ Number	Sample Location	Run DATE	Contents	Comments	Collected By
BSO-5AB-PIA	Coke Oven A II-AD	8/4	Probe/Imp Rinse Acetone		✓
" - " -PIB	"	8 "	" " Benzene		✓
" - " -PF	"	"	Filter		✓
" - " -CICD	"	"	Combined Impinger Condensate		✓
" " -CIA	"	"	" " Rinse Acetone		✓
" " -CIB	"	"	" " " Benzene		✓
" " ~~C~~ICDX	"	"	Knockout Imp. Condensate		
~~BSO Water Blank~~			~~New water containers for BSO-7 vent and BSO-6 amb~~		
	(see Blank sheet)				
BAP-5AB-PR	"	"	Probe (filter front) Meth		✓
" " PF	"	"	Filter " "		✓
" " XR	"	"	XAD-2		✓
" " CD	"	"	Module Condensate		✓
" " MR	"	"	Module Rinse Meth		✓

SAMPLE IDENTIFICATION LOG
BSO TEST 7 + Ambient 7A

SAMPLE ~~EPA~~ Number	Sample Location	Run DATE	Contents	Comments	Collec By
BSO-7-PIA	Coke Oven IA	8/5	Probe/Impinger Acetone		✓
" -7-PIB	✓ "	"	" Benzene		✓
" -7-PF	✓ "	"	Filter		✓
" -7-CICD	✓ "	"	Combined Impinger Condensate		✓
" -7-CIA	✓ "	"	" " Rinse Acetone	1 of 2	✓
" -7-CIB	✓ "	"	" " " Benzene		✓
BSO/BAP-7-VMC	✓ "	"	Vent Pipe Rinse $MeCl_2$		✓
" -7-VB	✓ "	"	" " Benzene		✓
" -7-NMC	✓ "	"	Nozzle $MeCl_2$		✓
" -7-NB	✓ "	"	" Benzene		✓
BSO-37-SG	✓ "	"	Silica Gel		✓
" -37-CC	✓ "	"	Charcoal		✓
" 7A-CD	✓ "	"	Knockout Imp Cond. DW	7	✓
BSO-7-CIA	? Voided			2 of 2	✓
BSO-7A-PIA	"	"	Probe Impinger Acetone		✓
" -7A-PIB	"	"	" Benzene		✓
" -7A-PF	"	"	Filter		✓
" -7A-CICD	"	"	Combined Impinger Condensate		✓
" -7A-CIA	"	"	" " Rinse Acetone		✓
" -7A-CIB	"	"	" " " Benzene		✓
" -57A-SG	"	"	Silica Gel		✓
" -57A-CC	"	"	Charcoal	1 of 2	✓
~~" -7A-CD~~	~~"~~	~~"~~	~~Knockout Imp Cond. DW~~		
" -7A-CD	"	"	Knockout Imp Cond DW		✓
" -57A-CC	"	"	Charcoal	2 of 2	✓

Notes: -37- Designation is for test 3 through 7
-57A Designation is for Ambient test 5A, 5B, 7

SAMPLE IDENTIFICATION LOG

BAP

SAMPLE ~~EPA~~ Number	~~Sample~~ Location	DATE ~~Run~~	~~Contents~~ SAMPLE	Comments	Collected By
BAP-1-PR	3 ft Plume/oven	8/2	PROBE-filter front	$MeCl_2$ 1 of 2	✓
BAP-1-PF	" "	"	Filter		✓
BAP-1-XR	" "	"	XAD-2 Resin		✓
BAP-1-CD	" "	"	Module Condensate		✓
BAP-1-MR	" "	"	Module Rinse (Back Filter)	$MeCl_2$	✓
~~BAP-1-CIR~~	~~" "~~	~~"~~	~~Combined Impinger + Rinses~~	~~$MeCl_2$~~ dropped	G. Riley
~~BAP-1-SG~~	~~" "~~	~~"~~	~~Silica Gel Impinger~~	~~"~~	G. Riley
BAP-2-PR	" "	"	Probe / filter front	$MeCl_2$	✓
" -2-PF	" "	"	Filter		✓
" -2-XR	" "	"	XAD-2 Resin		✓
" -2-CD	" "	"	Module Condensate		✓
" -2-MR	" "	"	Module Rinse-filter Back	$MeCl_2$	✓
~~" -2-CIR~~	~~" "~~	~~"~~	~~Combined Impinger rinse~~	~~$MeCl_2$ Acetone~~	dropped GR
~~" -2-SG~~	~~" "~~	~~"~~	~~Silica Gel Impinger~~		
~~" -1-CIMC~~	~~" "~~	~~"~~	~~Combined Impinger $MeCl_2$ in~~	~~$MeCl_2$~~	dropped
~~" -2-CIMC~~	~~" "~~	~~"~~	~~" "~~	~~"~~	dropped
BAP-1-PR			Probe Rinse	$MeCl_2$	2 of 2 ✓

Note: Combined impingers at end of ~~3 ft~~ test program

SAMPLE IDENTIFICATION LOG

BAP TEST 3, 4

SAMPLE ~~EPA~~ Number	Sample Location	Run	Date	Contents	Comments	Collected By
BAP-3-PR	Coke Oven Vent		8/3	Probe Front filter $MeCl_2$		✓
" -3- PF	"		"	Filter		✓
" -3 - XR	"		"	XAD-2 Resin		✓
" -3 - CD	"		"	Module Condensate		✓
" -3 - MR	"		"	Module Rinse (Back½ filter) $MeCl_2$		✓
BAP-4- PR	"		"	Probe Front½ filter $MeCl_2$		✓
" -4 - PF	"		"	Filter		✓
" -4 - XR	"		"	XAD-2 Resin		✓
" -4 - CD	"		"	Module Condensate		✓
" -4 - MR	"		"	Module Rinse $MeCl_2$		✓

SAMPLE IDENTIFICATION LOG

BAP-5, 6

SAMPLE ~~EPA~~ Number	Sample Location	Run	DATE Contents	Comments	Collected By
BAP-5-PR	Coke Oven Vent	8/4	Probe (front filter ½) $MeCl_2$		✓
" -5-PF	"	"	Filter		✓
" -5-XR	"	"	XAD-2 Resin		✓
" -5-CD	"	"	Module Condensate		✓
" -5-MR	"	"	" Rinse Back filter ½ $MeCl_2$		✓
BAP-6-PR	"	"	Probe (front filter ½) $MeCl_2$		✓
" -6-PF	"	"	Filter		✓
" -6-XR	"	"	XAD-2 Resin		✓
" -6-CD	"	"	Module Condensate		
" -6-MR	"	"	" Rinse (Back filter ½) $MeCl_2$		✓

SAMPLE IDENTIFICATION LOG

BAP TEST 7 + Ambient 7A

SAMPLE ~~EPA~~ Number	Sample Location	Run ~~DATE~~	Contents	Comments	Collected By
BAP-7-PR	Coke Oven AI	2/5	Probe Rinse MeCl2		✓
" -7- PF	"	"	Filter		✓
" -7- XR	"	"	XAD-2		✓
" -7- CD	"	"	Module Condensate	None Present	
" -7- MR	"	"	Module Rinse MeCl2		✓
~~" -37- CD~~	~~"~~	~~"~~			
~~" -37- CIMC~~	~~"~~	~~"~~			
~~" -37- CIA~~	~~"~~	~~"~~			
" -37- CC	"	"	Charcoal		✓
" -37- SG	"	"	Silica Gel		✓
" -37- CICD	"	"	Combined Imp Condensate		✓
" -37- CIA	"	"	" " Rinse Acetone		✓
" 37- CIMC	"	"	" " MeCl2		✓
" -7- MRA	"	"	Module Rinse Acetone		✓
BAP-7A-PR	"	"	Probe Rinse MeCl2		✓
" -7A-PF	"	"	Filter		✓
" -7A-XR	"	"	XAD-2		✓
" -7A-CD	"	"	Module Condensate	None Present	
" -7A-MR	"	"	Module Rinse MeCl2	~~None Present~~	✓
" -5~~7A~~CC	"	"	Charcoal	2 of 2	✓
" -5~~7A~~-SG	"	"	Silica Gel		✓
" -7A-MRA	"	"	Module Rinse Acetone		✓
" -37A-CICD			Combined Imp. Cond		✓
" -37A-CIA			" " Rinse Acetone		✓
" -37A-CIMC			" " " MeCl2		✓
" -5~~7A~~CC				1 of 2	

Note: -37- designation is for combined ~~sum~~ test 3 through 7

-5~~7A~~- A " " Ambient test 5A, 5B & 7

SAMPLE IDENTIFICATION LOG

BLANKS

Sample EPA Number	Sample Location	Date ~~Run~~	Contents	QA ✓	Comments	Collected By
BSO/BAP-MCB	Reagent/Bottle	7/31	$MeCl_2$ (Lot 3023)	✓	Blanks	GH
" -SGB	"	"	Silica Gel	✓	"	GH
" -PFB	"	"	Filter (2 sent)	✓	"	GH
" -AB	"	"	Acetone (Lot AA784)	✓	"	GH
" -BB	"	"	Benzene (Lot 1043)	✓	"	GH
" -XRB	"	"	XAD-2 (Lot 3, 149g)	✓	"	GH
		7/31				
BSO/BAP-O-UMCB	EQUIP BLANK	"	$MeCl_2$	✓	Vent Pipe	JMCR
" " -YBB	" "	"	Benzene	✓	" "	JMCR
" " NMCB	" "	"	$MeCl_2$	✓	Common Nozzle	D.W
" " NBB	" "	"	Benzene	✓	" "	D.W
BAP-O-PRB-1	" "	"	$MeCl_2$ Train 1	✓	Probe, filt front	GH
" " " -2	" "	"	" " 2	✓	" " "	CC
" " MRB-1	" "	"	" " 1	✓	Module Rinse	GH
" " " -2	" "	"	" " 2	✓	" "	CC
" " CIB-1	" "	"	" " 1	✓	Combined Impinger	GH
" " " -2	" "	"	" " 2	✓	" "	CC
BSO-OPIAB-1	" "	"	Acetone Train 1	✓	Probe, Impinger	D.W
" " " -2	" "	"	" " 2	✓	" "	JMCR
" " PIBB-1	" "	"	Benzene " 1	✓	" "	D.W
" " " -2	" "	"	" " 2	✓	" "	JMCR
" " CIMCB-1	" "	"	$MeCl_2$ " 1	✓	Combined Imp	D.W
" " " -2	" "	"	" " 2	✓	" "	J.MCR
" " CIBB-1	" "	"	Benzene " 1	✓	" "	D.W
" " " -2	" "	"	" " 2	✓	" "	JMCR
BSO/BAP-O-MCB	Reagent Blank	8/3	$MeCl_2$			
Note train 2	Probe will not be needed	on ambient	sampling ∴	small blank volume		
BSO-Water Blank	Reagent Blank	8/5	Water Blank	✓		

SAMPLE IDENTIFICATION LOG

BLANKS

Sample ~~EPA~~ Number	Sample Location	DATE ~~Run~~	Contents	QA ✓	Comments	Collected By
BSO/BAP-MCB	Reagent/Bottle	7/31	$MeCl_2$ (Lot 3023)	✓	Blanks	GH
" -SGB	"	"	Silica Gel	✓	"	GH
" -PFB	"	"	Filter (2 cent)	✓	"	GH
" -AB	"	"	Acetone (Lot AA754)	✓	"	GH
" -BB	"	"	Benzene (Lot 1043)	✓	"	GH
" -XRB	"	"	XAD-2 (Lot 3, 149g)	✓	"	GH
		7/31				
BSO/BAP-O-UMCB	EQUIP BLANK	"	$MeCl_2$	✓	Vent Pipe	JMCR
" " -VBB	" "	"	Benzene	✓	" "	JMCR
" " NMCB	" "	"	$MeCl_2$	✓	Common Nozzle	D.W
" " NBB	" "	"	Benzene	✓	" "	D.W
BAP-O-PRB-1	" "	"	$MeCl_2$ Train 1	✓	Probe, filt front	GH
" " " -2	" "	"	" " 2	✓	" " "	CC
" " MRB-1	" "	"	" " 1	✓	Module Rinse	GH
" " " -2	" "	"	" " 2	✓	" "	CC
" " CIB-1	" "	"	" " 1	✓	Combined Impinger	GH
" " " -2	" "	"	" " 2	✓	" "	CC
BSO-O-PIAB-1	" "	"	Acetone Train 1	✓	Probe, Impinger	D.W
" " " -2	" "	"	" " 2	✓	" "	JMCR
" " PIBB-1	" "	"	Benzene " 1	✓	" "	DW
" " " -2	" "	"	" " 2	✓	" "	JMCR
" " CIMCB-1	" "	"	$MeCl_2$ " 1	✓	Combined Imp	D.W
" " " -2	" "	"	" " 2	✓	" "	J.MCR
" " CIBB-1	" "	"	Benzene " 1	✓	" "	D.W
" " " -2	" "	"	" " 2	✓	" "	JMCR
BSO/BAP-O-MCB	Reagent Blank	8/3	$MeCl_2$			
Note: Train 2 Probe will not be needed for ambient sampling ∴ small blank volume						
BSO-Water Blank	Reagent Blank	8/5	Water Blank	✓		