Note: This is a reference cited in *AP 42, Compilation of Air Pollutant Emission Factors, Volume I Stationary Point and Area Sources.* AP42 is located on the EPA web site at www.epa.gov/ttn/chief/ap42/

The file name refers to the reference number, the AP42 chapter and section. The file name "ref02_c01s02.pdf" would mean the reference is from AP42 chapter 1 section 2. The reference may be from a previous version of the section and no longer cited. The primary source should always be checked.

21221 7.161068.4.1

PARTNERSHIP
{ BRIGHAM & DAY PAVING CO
{ DAYCO PAVING CO

Stack Test Report No. AM39 82-22

DETE WITCHEN

OPERATOR:

LAND:

OWNERS:
AGRIGATE INDUSTRIES

F.O. Day Co., Inc.
Boeing MS 400 Asphalt Plant
8700 D'Arcy Road
Forrestville, Maryland 20028

Division of Air Monitoring
Air Management Administration
Office of Environmental Programs
Department of Health and Mental Hygiene
State of Maryland

R A Johnson
Submitted by Richard A. Johnson

Walter W. Cooney
Approved by Walter W. Cooney

Date: December 21, 1982

Abstract

Introduction:

Particulate stack tests were conducted in December, 1982 on the exhaust emissions from the Boeing MS 400 Asphalt plant operated by F.O. Day Co., Inc., located in Forrestville. The tests were conducted in an effort to determine whether or not the facility was being operated within compliance of applicable Maryland State air quality regulations.

Results:

A summary of the results and average operating data for each test is presented in table 1-1. The Maryland State air quality regulations that govern the facility permit emissions to the atmosphere that do not exceed a particulate concentration of .03 grains/scfd.

Procedure:

Standard Maryland State Air Management Administration stack testing procedures, as outlined in technical memorandum AQCA-TM 73-116 (Revised November, 1982) were adopted for each test. Primary data are included in the appendix.

The Stack Test Section beleives the data presented herein to be valid, and the results presented herein to be representative of the facility's emissions hen the facility is operating at the conditions at which it was operating when the testing was conducted.

Table 1-1. Summary of Particulate Sampling Results For:
AM39 F.O. Day Co. Inc., Forrestville, MD, Dec. '82
82-22 Boeing MS 400 Asphalt Plant

Run ID	Production Rate (tph)	Fuel Rate (gal/ton)	Average Stack Gas Data					Concentration* (grains/scfd)	Emission Rate* (lbs/hr)	Visible Emission % Opacity
			flow rate (scfm dry)	temp (^oF)	% O_2	% CO_2	% H_2O			
12-6-82	367	1.75	24900	157	16.5	4.0	28.4	.0061	1.30	0
12-7-82	330	1.75	26357	153	16.3	3.8	23.5	.0044	.999	0
12-8-82	319	1.75	25823	154	15.2	3.7	25.2	.0076	1.69	0
Average	338.7	1.75	25693	155	16	3.8	25.7	.0060	1.33	0

*based on front half catch

APPENDIX:

Nomenclature
Calculated Results
Data Summaries
Laboratory Analyses
Primary Data
Calibration Data
Preliminary Stack Test Survey

MARYLAND STATE
Air Management Administration
STACK SAMPLING NOMENCLATURE

A_s : cross sectional area of stack at sample site, (ft^2)

B_w : mole fraction moisture in stack gas, (dimensionless)

C_d : concentration of front half catch, (grains/scfd)

C_{d12} : concentration at 12% CO2, front half catch, (grains/scfd)

C_{d50} : concentration at 50% EA, front half catch, (grains/scfd)

C_m : dry gas meter correction factor, (dimensionless)

C_p : pitot tube coefficient, (dimensionless)

C_t : concentration of total catch, (grains/scfd)

C_{t12} : concentration at 12% CO2, total catch, (grains/scfd)

C_{t50} : concentration at 50% EA, total catch, (grains/scfd)

D_n : diameter of sampling nozzle inlet, (in)

EA : percent excess air in stack gas, (%)

E_d : emission rate, front half, (lbs/hr)

E_t : emission rate, total, (lbs/hr)

$\Delta H@$: orifice meter pressure differential that provides a flow rate of .75 ft^3/min at 70°F and 29.92 in.Hg, (in. H_2O)

ΔH_{avg} : average orifice pressure differential, (in. H_2O)

I : percent isokinetic, (%)

M_d : molecular weight of stack gas, dry basis, (lb/lb mole)

M_w : molecular weight of stack gas, wet basis, (lb/lb mole)

N_{ti} : normality of titrant for SO_x sample, (g-eq/l)

P_{bar} : barometric pressure, (in. Hg)

P_{savg} :average absolute stack pressure, (in. Hg)

NOMENCLATURE

ΔP	: velocity pressure differential, (in. H_2O)
Q_{alq}	: volume of SO_x sample aliquot titrated, (ml)
Q_m	: net dry sample gas volume, (acfd)
Q_{mstd}	: standard dry gas sample volume, (scfd)
Q_s	: actual stack gas volumetric flow rate, dry basis, (acfm dry)
Q_{soln}	: total volume of SO_x sample solution, (ml)
Q_{sstd}	: standard stack gas volumetric flow rate, dry basis, (scfm dry)
Q_{ti}	: volume of titrant required to neutralize SO_x sample aliquot, (ml)
Q_{tib}	: volume of titrant required to neutralize blank solution, (ml)
Q_{tstd}	: total standard sample volume, (scf)
Q_w	: total volume of water collected, (ml)
Q_{wstd}	: standard vapor volume of water collected, (scf)
T_{mavg}	: average dry gas meter temperature, (^oF)
T_{savg}	: average stack temperature, (^oF)
V_s	: average velocity of stack gas at sample site, (ft/sec)
W_d	: front half particulate catch, (mg)
W_t	: total particulate catch, (mg)
θ	: sampling time, (min.)

MARYLAND STATE
AIR MANAGEMENT ADMINISTRATION

PARTICULATE STACK SAMPLING DATA SUMMARY

Plant F.O. Day Forrestville

Source Boeing MS 400 Asphalt Plant

RUN ID	12-6-82		12-7-82		12-8-82
1. C_p	.84		.84		.84
2. Q_m	76.366		47.297		46.647
3. T_{mavg}	103.7		94.9		84.0
4. P_{bar}	29.89		30.49		30.60
5. ΔH_{avg}	1.110		1.080		1.078
6. Q_w	602.9		298.8		332.3
7. W_d	28.7		13.4		23.3
8. W_t	137.9		49.4		69.7
9. $\%CO_2$	4.0		3.8		3.7
10. $\%O_2$	16.5		16.3		15.2
11. T_{savg}	157.1		152.6		153.6
12. $(\Delta P)^{\frac{1}{2}}_{avg}$	1.113		1.098		1.095
13. P_{savg}	29.831		30.429		30.549
14. A_s	9.39		9.39		9.39
15. D_n	.190		.190		.190
16. θ	130.85		84		84

MARYLAND STATE
AIR MANAGEMENT ADMINISTRATION

PARTICULATE STACK SAMPLING CALCULATED RESULTS

Plant F.O. Day Forrestville

Source Boeing MS 400 Asphalt Plant

RUN ID	12-6-82		12-7-82		12-8-82
1. Q_{mstd}	72.874		46.765		47.215
2. Q_{wstd}	28.931		14.338		15.946
3. Q_{tstd}	101.806		61.103		63.161
4. B_w	.284		.235		.252
5. M_d	29.30		29.26		29.20
6. M_w	26.09		26.62		26.37
7. EA	*		*		*
8. V_s	71.2		68.6		68.6
9. Q_s	28699.6		29564.9		28898.5
10. Q_{sstd}	24900.1		26357.3		25822.6
11. C_d	.0061		.0044		.0076
12. C_t	.0292		.0163		.0228
13. C_{d12}	*		*		*
14. C_{t12}	*		*		*
15. C_{d50}	*		*		*
16. C_{t50}	*		*		*
17. E_d	1.30		.999		1.69
18. E_t	6.23		3.68		5.04
19. I	106.7		100.7		103.8

*Not Applicable

pt. no.	TIME (min)	DRY GAS METER Volume (acfd)	Temp (°F) in	Temp (°F) out	VELOCITY HEAD ΔP (in. H_2O)	VELOCITY HEAD $(\Delta P)^{1/2}$ (in. $H_2O)^{1/2}$	ORIFICE DIFFERENTIAL (IN H_2O) actual	ORIFICE DIFFERENTIAL (IN H_2O) desired	PUMP VAC. "Hg.	TEMPERATURES °F stack	TEMPERATURES °F probe	TEMPERATURES °F oven
1	0	351.000	83	81	1.00	1.000	<-	.88	1	153	250+25	225
2	3	352.56	89	81	1.00	1.000	<-	.88	1	154		231
3	6	354.10	95	82	1.00	1.000	<-	.88	1	156		234
4	9	355.67	100	83	1.00	1.000	<-	.88	1	155		240
5	12	357.35	105	85	.98	.990	<-	.87	1	156		240
6	15	358.80	104	86	1.00	1.000	<-	.88	1	157		250
7	18	360.37	100	88	.98	.975	<-	.86	1	158		275
8	21	361.90	105	89	1.00	1.000	<-	.88	1	158		246
9	24	363.47	109	90	1.10	1.048	<-	.97	1	157		275
10	27	365.12	111	91	1.10	1.048	<-	.97	1	158		273
11	30	366.80	113	92	1.20	1.095	<-	1.05	1	158		276
12	33	368.-	115	93	1.30	1.140	<-	1.15	1	158		261
13	36	370.40	117	94	1.30	1.140	<-	1.15	1	159		276
14	39	372.10	117	95	1.40	1.183	<-	1.25	1	158		278
15	42	374.00	118	95	1.50	1.224	<-	1.30	1	158		274
16	45	375.86	118	96	1.50	1.224	<-	1.30	1	159		276
17	48	377.77	119	96	1.60	1.265	<-	1.45	1	157		288
18	51	379.75	120	97	1.60	1.265	<-	1.45	1	158		248
19	54	381.76	120	97	1.70	1.304	<-	1.50	2	157		270
20	57	383.80	121	97	1.80	1.342	<-	1.60	2	156		276
21	60	385.83	122	97	1.70	1.304	<-	1.50	2	157		276
22	63	387.83	123	98	1.50	1.224	<-	1.30	2	157		276
	66	389.73										
TOT			2424	2003		24.771		24.95		34[illegible]		
AVG.												

NOTES

OFFICE OF ENVIRONMENTAL PROGRA
AIR MANAGEMENT ADMINISTRATION
STACK SAMPLING DATA

Plant F.O. DAY FORRESTVILLE
Source MS 400 BOEING ASPHALT
Run ID 12/6/82-1 Operators RJDL
Start 10:21 AM Finish 12:50
Sampling for: PARTICULATE
Pitobe ID 5-C Cp .84
Meter Box Green Cm 1.001 H@1.8
DGM ID 593235 C Factor .71
Filter ID .6537 Noz. ID .190
Baro.(in. Hg.) 29.89
Ambient °F 60'S
Psavg: (in. H_2O) -.80
(29.831) (in. Hg) -.059
Avg. % CO_2 4.0 % O_2 16½
Leak Rate (acfm) Pre 0.000 @15"Hg.
Post 0.000 @3"Hg.
Duct Dimensions 41½"
Area 9.39 ft^2
Diameters Upstream 1
Diameters Downstream 3
Assumed H_2O (%) 25%

SN TOP ~~200~~ tph
807 total = 367 tph

DHMH 1630

pt. no.	TIME (min)	DRY GAS METER Volume (acfd)	Temp (°F) in	Temp (°F) out	VELOCITY HEAD ΔP (in. H_2O)	VELOCITY HEAD $(\Delta P)^{1/2}$ (in. $H_2O)^{1/2}$	ORIFICE DIFFERENTIAL (IN H_2O) actual	ORIFICE DIFFERENTIAL (IN H_2O) desired	PUMP VAC. "Hg.	TEMPERATURES °F stack	TEMPERATURES °F probe	TEMPERATURES °F oven
1	0	387.735	104	95	.90	.948	←	.80	1	156		276
2	3	391.25	105	95	.95	.975	←	.85	1	155		276
3	6	392.80	107	95	.95	.975	←	.85	1	155		246
4	9	394.35	110	95	.95	.975	←	.85	1	155		279
5	12	395.92	112	96	1.00	1.000	←	.88	1	156		275
6	15	397.50	112	96	1.00	1.000	←	.88	1	155		243
7	18	399.09	113	96	1.00	1.000	←	.88	1	156		265
8	21	400.67	113	96	1.10	1.048	←	.97	1	155		276
9	24	402.33	111	96	1.10	1.048	←	.97	1	156		256
10	27	404.01	113	97	1.20	1.095	←	1.05	2	157		245
11	30	405.72	115	97	1.20	1.095	←	1.05	2	155		273
12	33	407.43	117	98	1.20	1.095	←	1.05	2	155		237
13	36	409.16	118	98	1.30	1.140	←	1.15	2	159		276
14	39	410.95	119	99	1.40	1.183	←	1.25	2	158		254
15	42	412.84	120	99	1.40	1.183	←	1.25	2	161		276
16	45	414.72	121	100	1.40	1.183	←	1.25	2	161		268
17	48	416.59	121	100	1.40	1.183	←	1.25	2	160		248
18	51	418.45	122	100	1.50	1.224	←	1.35	2	158		276
19	54	420.38	122	101	1.50	1.224	←	1.35	2	159		246
20	57	422.31	123	101	1.50	1.224	←	1.35	2	158		276
21	60	424.23	123	101	1.50	1.224	←	1.35	2	159		247
22	63	426.15	122	101	1.40	1.183	←	1.25	2	158		273
*	64:51	427.290										
			49.67	41.55		48.976		48.83		69.11		
TOT		76.290	112.9	94.4								
AVG.			103.7			1.113	←	1.110		157.1		

NOTES

feed stopped
* flame out

DHMH 1630 76.366

OFFICE OF ENVIRONMENTAL PROGRA
AIR MANAGEMENT ADMINISTRATION
STACK SAMPLING DATA

Plant FODAY FORRESTVILLE
Source MS 400 BOEING ASPHALT
Run ID 12/6/82-1 Operators [illegible]
Start 10:21 AM Finish 12:50 [illegible]
Sampling for: PARTICULATE
Pitobe ID 5-C Cp .84
Meter Box Green Cm 1.001 H@1.[illegible]
DGM ID 593235 C Factor .71
Filter ID .6537 Noz. ID .190
Baro.(in. Hg.) 29.89
Ambient °F 70's
Psavg: (in. H_2O) -.80
(29.831) (in. Hg) -.059
Avg. % CO_2 4.0 % O_2 16½
Leak Rate (acfm) Pre 0.000 @15"Hg.
Post 0.000 @3"Hg.
Duct Dimensions 41½"
Area 9.39 ft^2
Diameters Upstream 1
Diameters Downstream [illegible]
Assumed H_2O (%) 25

CO_2 O_2
4½ 16
3½ 16½
4 17

✓ DR

MARYLAND STATE
BUREAU OF AIR QUALITY & NOISE CONTROL
AND BUREAU OF LABORATORIES

PARTICULATE STACK SAMPLING LABORATORY RESULTS

Plant: F O DAY — Completed: 12/13/82

Facility Tested: FORRESTVILLE — By: Sheila D Warfield

Test Date: 12/6/82

Run ID: 12·6·82·1 — # OR PG

WEIGHT OF PARTICULATE COLLECTED

Container		Final Weight (grams)	Initial Weight (grams)	Weight Gain (mg)
Probe	68	145.6050	145.5970	8.0
Filter	A	158.0495 157.3763	.6732 .6537	19.5
Cyclone	1	151.6251	151.6239	1.2
			Subtotal, (mg)	28.7
Water Soluble	33 148	146.5139 143.9498	146.5025 143.9371	11.4 12.7 } 24.1
Organics	L	146.3122	146.2455	66.7
Acetone Wash	53	134.5463	134.5279	18.4
			Subtotal, (mg)	109.2

Total Weight of Particulate Collected, (mg) 137.9

	Sulfate	Acidity
Probe	_____ mg.	_____ meq. N_aOH
Filter	_____ mg.	_____ meq. N_aOH

VOLUME OF MOISTURE COLLECTED

		Final Volume (ml)	Initial Volume (ml)	Volumetric Gain (ml)
Impingers		762.6	200.0	562.6
Silica Gel	46	434.2	393.3	40.9
			Total Gain, (ml)	602.9

DHMH 3041

pt. no.	TIME (min)	DRY GAS METER Volume (acfd)	Temp (°F) in	Temp (°F) out	VELOCITY HEAD Δ P (in. H_2O)	(ΔP) ½ (in.H_2O)½	ORIFICE DIFFERENTIAL (IN H_2O) actual	desired	PUMP VAC. "Hg.	TEMPERATURES °F stack	probe	oven
1	0	490.000	59	54	1.20	1.095		← 1.05	2	152	250±25	238
2	3	491.62	65	55	1.20	1.095		← 1.05	2	153		247
3	6	493.26	70	56	1.20	1.095		← 1.05	2	153		263
4	9	494.88	76	57	1.20	1.095		← 1.05	2	152		275
5	12	496.53	81	58	1.10	1.048		← .97	2	152		276
6	15	498.13	86	60	1.10	1.048		← .97	2½	153		266
7	18	499.74	89	62	1.10	1.048		← .97	2½	152		276
8	21	501.34	92	63	1.30	1.140		← 1.15	3	153		255
9	24	503.07	96	65	1.40	1.183		← 1.25	3	154		276
10	27	504.87	101	66	1.60	1.265		← 1.40	3	154		268
11	30	506.75	103	68	1.60	1.265		← 1.40	3½	155		258
12	33	508.64	106	70	1.80	1.342		← 1.60	3½	156		269
13	36	510.61	110	72	1.80	1.342		← 1.60	3½	153		265
14	39	512.61	112	73	1.50	1.224		← 1.30	3	153		266
	42	514.426										
TOT			1246	879		16.285		16.81		2145		
AVG.												

NOTES
SW TOP
MIX

DHMH 1630

OFFICE OF ENVIRONMENTAL PROGRAM
AIR MANAGEMENT ADMINISTRATION
STACK SAMPLING DATA

Plant F.O.DAY FORRESTVILLE
Source MS 400 BOEING ASPHALT
Run ID 12/8/82-1 Operators RJDR
Start 9:00 AM Finish 10:30 AM
Sampling for: PARTICULATE
Pitobe ID 5-C Cp .84
Meter Box Green Cm 1.001 H@1.8
DGM ID 593235 C Factor .71
Filter ID .6840 Noz. ID .190
Baro.(in. Hg.) 30.60
Ambient °F 40'S
Psavg: (in. H_2O) .70
(in. Hg) .051
Avg. % CO_2 3.7 % O_2 15.2
Leak Rate (acfm) Pre 0.000 @15"Hg.
Post 0.000 @ 5"Hg.
Duct Dimensions 41½"
Area 9.39 ft^2
Diameters Upstream 1
Diameters Downstream 3
Assumed H_2O (%) 25

pt. no.	TIME (min)	DRY GAS METER Volume (acfd)	Temp (°F) in	Temp (°F) out	VELOCITY HEAD Δ P (in. H_2O)	(ΔP) ½ (in. H_2O)½	ORIFICE DIFFERENTIAL (IN H_2O) actual	desired	PUMP VAC. "Hg.	TEMPERATURES °F stack	probe	oven
1	0	514.426	99	75	.73	.854	←	.65	2	154	250±25	269
2	3	515.74	99	76	.78	.883	←	.70	2	154		264
3	6	517.12	100	76	.82	.906	←	.73	2	154		278
4	9	518.51	101	77	.78	.883	←	.70	2	155		265
5	12	519.87	101	78	.80	.894	←	.71	2	157		250
6	15	521.25	102	78	.82	.906	←	.73	2	156		266
7	18	522.65	103	79	.90	.948	←	.80	2½	154		268
8	21	524.13	104	80	1.20	1.095	←	1.05	3	154		263
9	24	525.78	106	80	1.30	1.140	←	1.15	3½	153		269
10	27	527.55	108	81	1.30	1.140	←	1.15	3½	153		269
11	30	529.33	109	82	1.40	1.183	←	1.25	4	154		270
12	33	531.14	110	83	1.40	1.183	←	1.25	4	153		270
13	36	532.97	111	83	1.40	1.183	←	1.25	4	152		271
14	39	534.77	112	83	1.40	1.183	←	1.25	4	152		270
	42	536.600										
			2711	1990		30.666		30.18		4300		
TOT	84	46.600	96.8	71.1								
AVG.			84.0			1.0952		1.078		153.6		

NOTES

x1.001

46.647

CO_2	O_2
3½	15½
4	14
3½	15½

447 total

319 fpm

✓ DR

OFFICE OF ENVIRONMENTAL PROGRAM
AIR MANAGEMENT ADMINISTRATION
STACK SAMPLING DATA

Plant FO DAY FORRESTVILLE

Source BOEING ASPHALT (MS 400)

Run ID 12/8/82-1 Operators RJ DR

Start 900 AM Finish 1030 AM

Sampling for: PARTICULATE

Pitobe ID S-C Cp .84

Meter Box Green Cm 1.001 H@1.84

DGM ID 593235 C Factor .71

Filter ID 6840 Noz. ID .190

Baro. (in. Hg.) 30.60

Ambient °F 40's

Psavg: (in. H_2O) .70

~~30.549~~ (in. Hg) .051

Avg. % CO_2 3.7 % O_2 15.2

Leak Rate (acfm) Pre 0.000 @15"Hg.

Post 0.000 @5"Hg.

Duct Dimensions 41½"

Area 9.39 ft^2

Diameters Upstream 1

Diameters Downstream 3

Assumed H_2O (%) 25

DHMH 1630

MARYLAND STATE
BUREAU OF AIR QUALITY & NOISE CONTROL
AND BUREAU OF LABORATORIES

PARTICULATE STACK SAMPLING LABORATORY RESULTS

Plant: FO DAY Completed: 12/13/82

Facility Tested: FORRESTVILLE By: Sheila D. Warfield

Test Date: 12/7/82

Run ID: _____ # OR PX

WEIGHT OF PARTICULATE COLLECTED

Container		Final Weight (grams)	Initial Weight (grams)	Weight Gain (mg)
Probe	41	148.2095	148.2032	6.3
Filter	B	140.6703 140.0074	.6629 .6575	5.4
Cyclone	13	147.7674	147.7657	1.7
			Subtotal, (mg)	13.4
Water Soluble	65 36	146.0813 146.3024	146.0785 146.2997	2.8 2.7 } 5.5
Organics	66	146.4601	146.4582	1.9
Acetone Wash	15	145.9203	145.8917	28.6
			Subtotal, (mg)	36.0

Total Weight of Particulate Collected, (mg) 49.4

	Sulfate	Acidity
Probe	_____ mg.	_____ meq. N_aOH
Filter	_____ mg.	_____ meq. N_aOH

VOLUME OF MOISTURE COLLECTED

		Final Volume (ml)	Initial Volume (ml)	Volumetric Gain (ml)
Impingers		458.0	200.0	258.0
Silica Gel	3	420.8	380.0	40.8
			Total Gain, (ml)	298.8

DHMH 3041

pt. no.	TIME (min)	DRY GAS METER Volume (acfd)	Temp (°F) in	Temp (°F) out	VELOCITY HEAD ΔP (in. H_2O)	VELOCITY HEAD $(\Delta P)^{1/2}$ (in. $H_2O)^{1/2}$	ORIFICE DIFFERENTIAL (IN H_2O) actual	ORIFICE DIFFERENTIAL (IN H_2O) desired	PUMP VAC. "Hg.	TEMPERATURES °F stack	TEMPERATURES °F probe	TEMPERATURES °F oven
1	0	436.000	65	62	.90	.948	.80 ←	.80	1	153	250±25	235
2	3	437.44	69	62	.93	.964	←	.83	1	153		244
3	6	438.91	76	63	.90	.948	←	.80	1	153		249
4	9	440.35	79	63	.90	.948	←	.80	1	153		256
5	12	441.79	85	64	.95	.975	←	.85	1	151		260
6	15	443.29	90	65	1.05	1.025	←	.93	1	151		265
7	18	444.85	91	66	1.10	1.048	←	.97	1	150		269
8	21	446.45	95	67	1.30	1.140	←	1.15	1	151		268
9	24	448.20	100	69	1.40	1.183	←	1.25	1	150		276
10	27	450.10	103	71	1.50	1.224	←	1.30	1	152		233
11	30	451.84	106	74	1.60	1.265	←	1.40	1	152		250
12	33	453.74	109	76	1.60	1.265	←	1.40	1	153		255
13	36	455.65	113	79	1.80	1.342	←	1.60	2	153		248
14	39	457.65	117	82	1.80	1.342	←	1.60	2	152		247
	42	459.673										
			12.98	963		15.617		15.68		2127		
TOT												
AVG.												

NOTES

OFFICE OF ENVIRONMENTAL PROGRAM
AIR MANAGEMENT ADMINISTRATION
STACK SAMPLING DATA

Plant F.O.DAY FORRESTVILLE
Source MS400 BOEING ASPHALT
Run ID 12/7/82-1 Operators LSDP
Start 9:05 AM Finish
Sampling for: PARTICULATE
Pitobe ID 5-C Cp .84
Meter Box GREEN Cm 1.001 H@1.84
DGM ID 593235 C Factor .71
Filter ID .6575 Noz. ID .190
Baro.(in. Hg.) 30.49
Ambient °F 50'S
Psavg: (in. H_2O) -.83
30.429 (in. Hg) -.061
Avg. % CO_2 3.8 % O_2 16.3
Leak Rate (acfm) Pre 0.000 @15"Hg.
Post 0.008 @3 "Hg.
Duct Dimensions 41 1/2"
Area 9.39 ft^2
Diameters Upstream 1
Diameters Downstream 3
Assumed H_2O (%) 25

S/N TOP mix 330 gph

DHMH 1630

pt. no.	TIME (min)	DRY GAS METER Volume (acfd)	Temp (°F) in	Temp (°F) out	VELOCITY HEAD ΔP (in. H_2O)	VELOCITY HEAD $(\Delta P)^{1/2}$ (in. $H_2O)^{1/2}$	ORIFICE DIFFERENTIAL (IN H_2O) actual	ORIFICE DIFFERENTIAL (IN H_2O) desired	PUMP VAC. "Hg.	TEMPERATURES °F stack	TEMPERATURES °F probe	TEMPERATURES °F oven
1	0	459.673	110	89	.88	.938	←	.78	1	153		276
2	3	461.25	112	90	.93	.964	←	.83	1	153		276
3	6	462.64	116	92	.93	.964	←	.83	1	152		258
4	9	464.16	118	93	.95	.975	←	.85	1	155		250
5	12	466.—	122	95	.95	.975	←	.85	1	155		268
6	15	467.24	123	96	.95	.975	←	.85	1	156		276
7	18	468.78	124	96	1.10	1.048	←	.97	1	156		246
8	21	470.42	126	97	1.30	1.140	←	1.15	1	154		272
9	24	472.19	127	97	1.30	1.140	←	1.15	1	154		276
10	27	473.98	127	97	1.40	1.183	←	1.25	1	153		276
11	30	475.82	128	97	1.50	1.224	←	1.30	1	153		260
12	33	477.68	128	97	1.50	1.224	←	1.30	1	151		271
13	36	479.57	129	98	1.50	1.224	←	1.30	1	151		260
14	39	481.47	130	98.	1.30	1.140	←	1.15	1	151		260
	42	483.250										
			3018	2295		30.731		32.24		4[illegible]14		
TOT	84	47.250	107.8	82.0								
AVG.			94.9			1.098		1.08		152.6		

NOTES ×1.001

47.297

436

DHMH 1630

OFFICE OF ENVIRONMENTAL PROGRAM
AIR MANAGEMENT ADMINISTRATION
STACK SAMPLING DATA

Plant FODAY FORRESTVILLE

Source MS 400 BOEING ASPHALT

Run ID 8/7/82-1 Operators RJ DR

Start 9:05 AM Finish 10:35

Sampling for: PARTICULATE

Pitobe ID 5-C Cp .84

Meter Box Green Cm 1.001 H@1.84

DGM ID 593235 C Factor .71

Filter ID .6575 Noz. ID .190

Baro.(in. Hg.) 30.49

Ambient °F 50'S

Psavg: (in. H_2O) -.83

(30.429) (in. Hg) -.061

Avg. % CO_2 3.8 % O_2 16.3

Leak Rate (acfm) Pre 0.008 @15"Hg.

Post 0.000 @3"Hg.

Duct Dimensions 41½"

Area 9.39 ft^2

Diameters Upstream 1

Diameters Downstream 3

Assumed H_2O (%) 25

CO_2: 4, 3½, 4 → 3.8

O_2: 16½, 16¼, 16 → 16.3

461 total
330 tph

✓DR

MARYLAND STATE
BUREAU OF AIR QUALITY & NOISE CONTROL
AND BUREAU OF LABORATORIES

PARTICULATE STACK SAMPLING LABORATORY RESULTS

Plant: FO DAY
Completed: 12/13/82
Facility Tested: FORRESTVILLE
By: Sheila D. Harfield
Test Date: 12/8/82
Run ID:
#: DRY

WEIGHT OF PARTICULATE COLLECTED

Container		Final Weight (grams)	Initial Weight (grams)	Weight Gain (mg)
Probe	35	151.8330	151.8279	5.1
Filter	C	156.8776 156.1777	.6999 .6840	15.9
Cyclone	48	151.5006	151.4983	2.3
			Subtotal, (mg)	23.3
Water Soluble	86 100D	147.3525 135.5462	147.3490 135.5388	3.5 7.4 } 10.9
Organics	18	140.6802	140.6659	14.3
Acetone Wash	63	147.1746	147.1534	21.2
			Subtotal, (mg)	46.4

Total Weight of Particulate Collected, (mg): 69.7

	Sulfate	Acidity
Probe	_____ mg.	_____ meq. N_aOH
Filter	_____ mg.	_____ meq. N_aOH

VOLUME OF MOISTURE COLLECTED

		Final Volume (ml)	Initial Volume (ml)	Volumetric Gain (ml)
Impingers		490.0	200.0	290.0
Silica Gel	B	450.0	407.7	42.3
			Total Gain, (ml)	332.3

DHMH 3091

4/79 3c

COURIER GRAPH PAPER ®
PRINTED IN U.S.A.

5-82

Special Bureau of Air Quality Control Meter No. 593235
This meter was proved on a secondary standard that has been approved by the Maryland Public Service Commission's standard cubic-foot bottle 1034 approved and calibrated by The U.S. Bureau of Standard Weights and Measures.

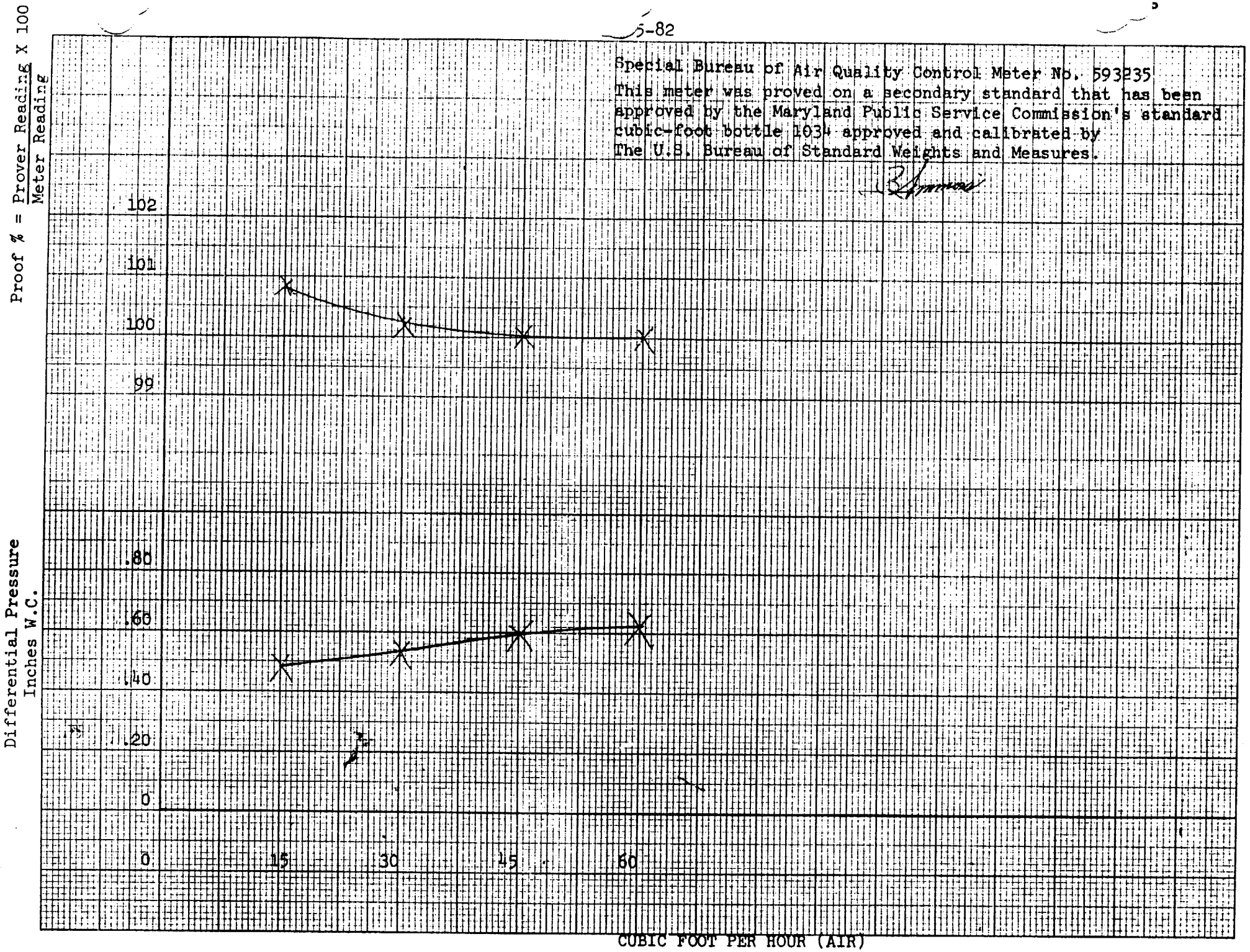

NOZZLE & PITOT TUBE CALIBRATION SHEET

Facility F.O.DAY FLUE

Pitobe ID S-C

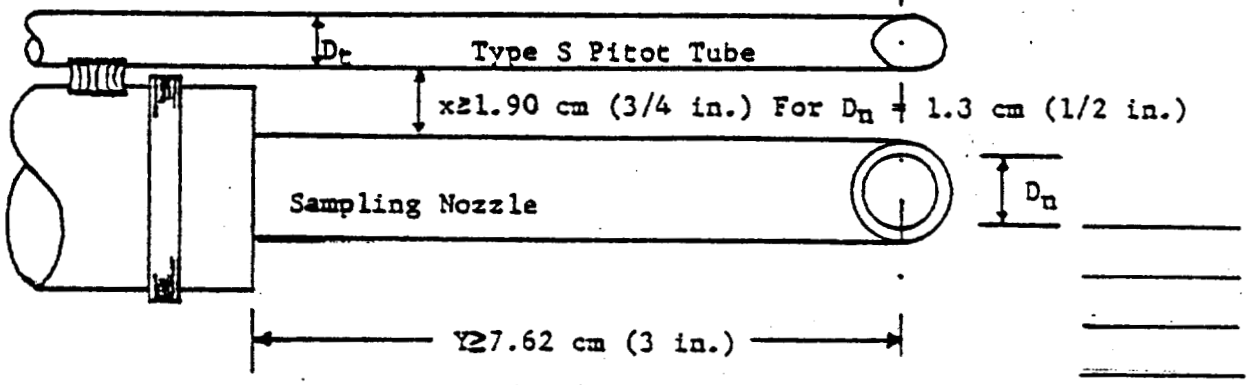

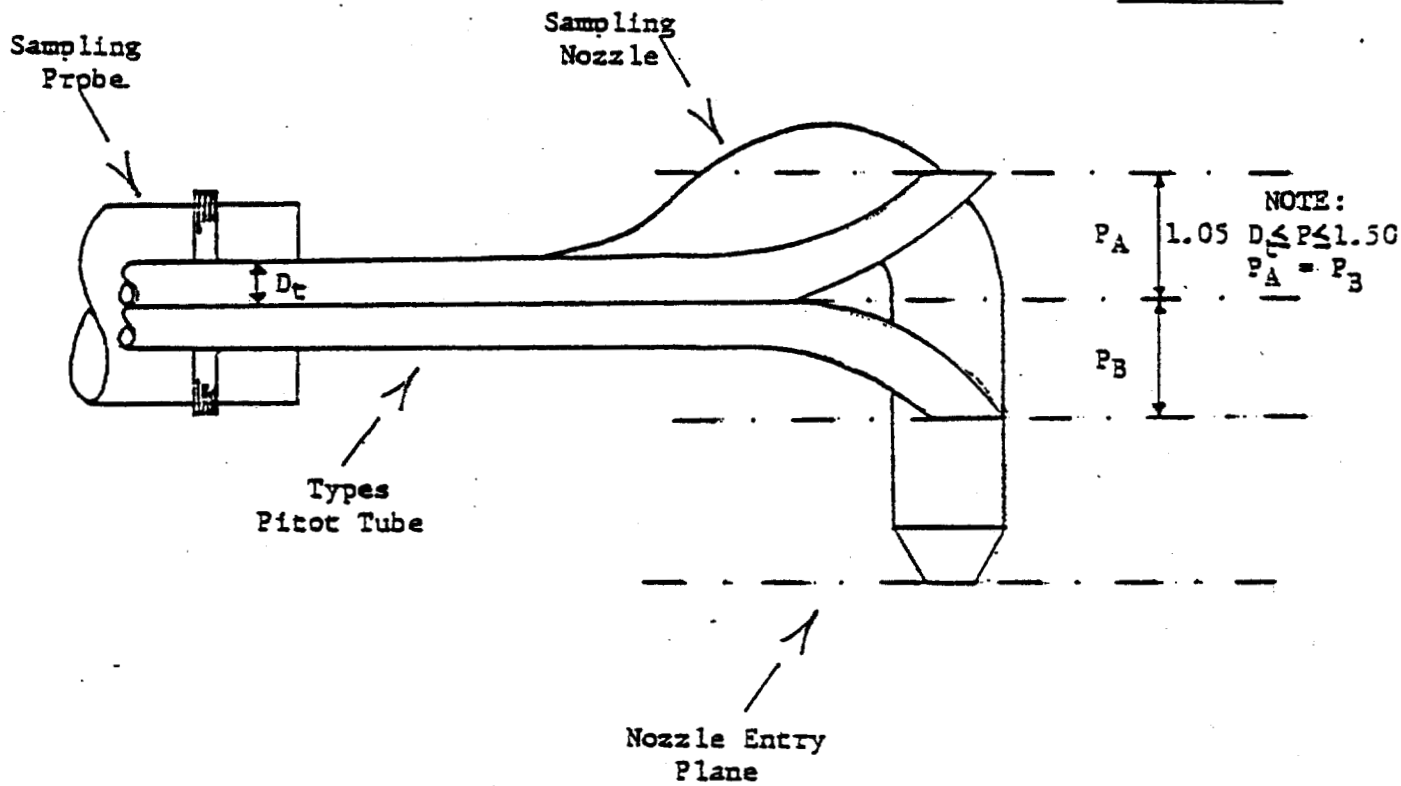

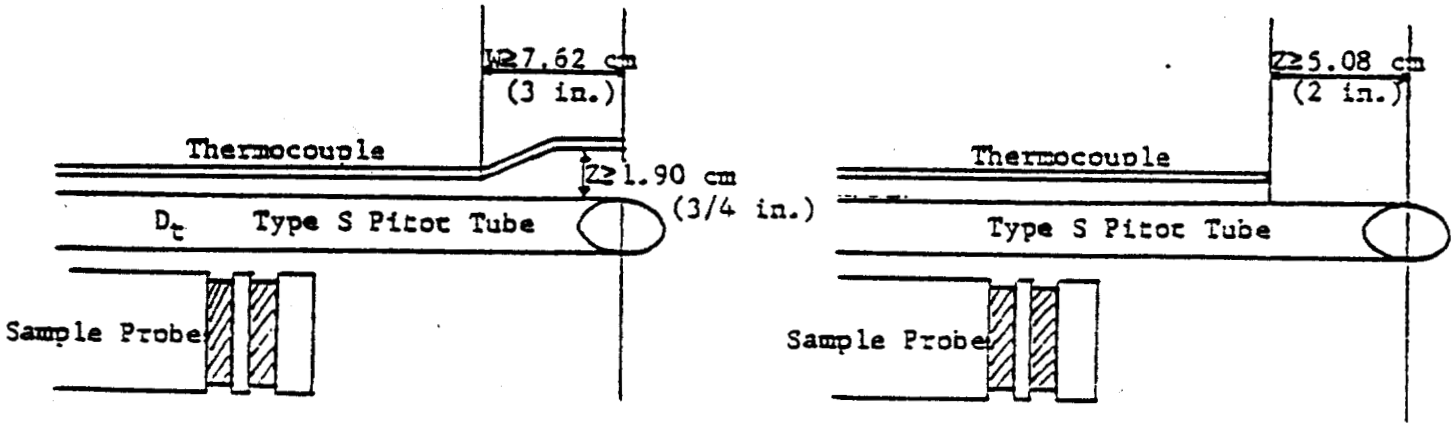

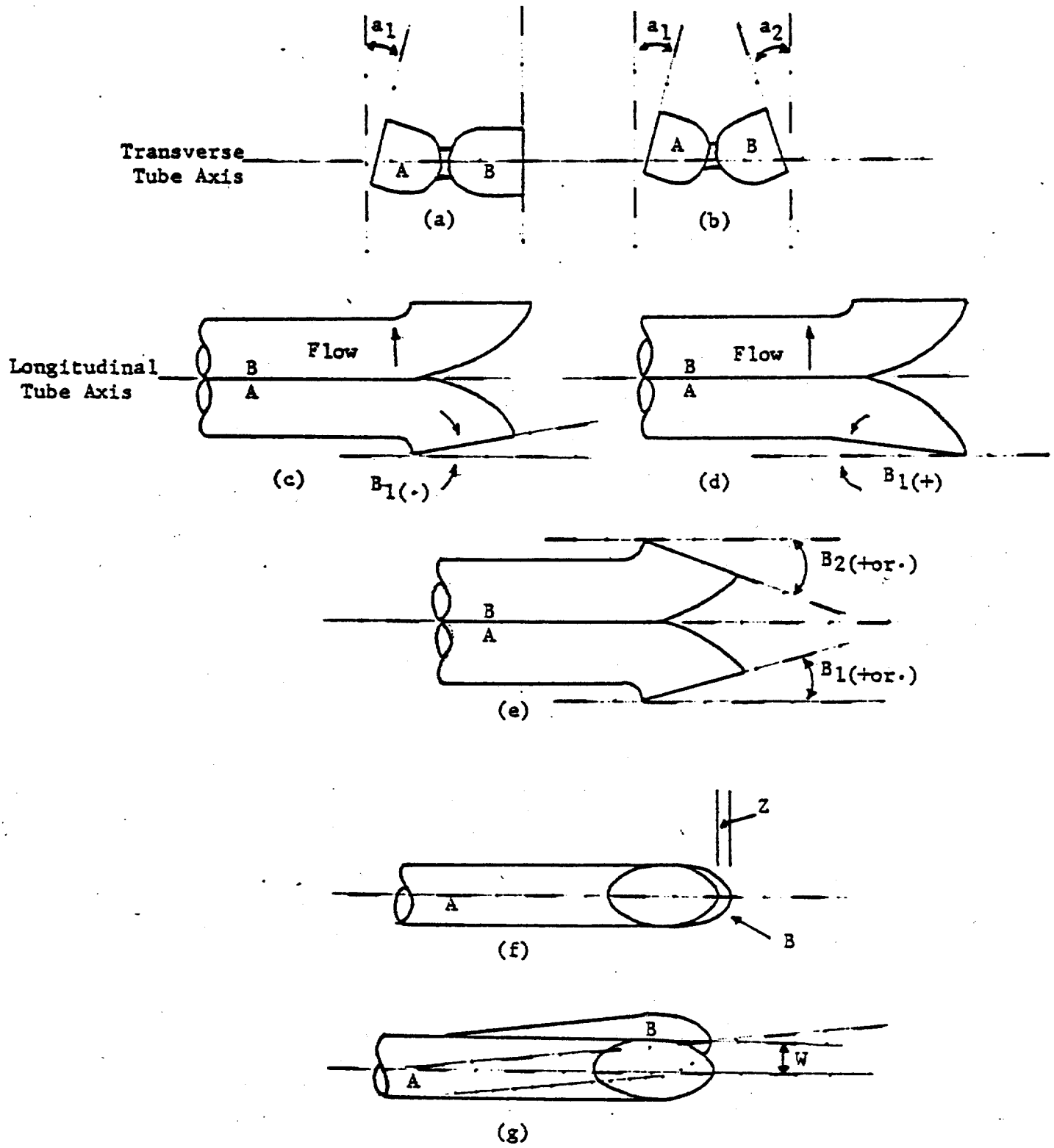

Figure 2-3. Types of face-opening misalignment that can result from Field use or improper construction of Type S pitot tubes. These will not affect the baseline value of Cp(s) so long as a_1 and a_2 10°, B_1 and B_2 5°.z 0.32 cm (1/8 in.) and w 0.08 cm (1/32 in.) PITOT ALIGMENT OK _____

TEMPERATURE MEASURING UNIT CALIBRATION: DATE: 12/6/82

BY: RG

MARYLAND STATE
BUREAU OF AIR QUALITY & NOISE CONTROL

STACK SAMPLING PRELIMINARY SURVEY

Dec 1st. [illegible]

I. General Information:

Plant F.O. DAY - Forrestville

Address 8700 D'Arcy Road, Forrestville, Md. 20028

Telephone 350 · 6100 Survey Date Nov 82

Facility to be Tested Boeing Construction Equipment Company

Contact(s): Harry Watson, Boeing Representative

Walt O'Conner Title Manager FO Day Ext.

Steve Keller Title Forman/superintendent Ext.

* Dave Eckler Title Gen. Manager Ext.

Process Description (including type, operating schedule, feed composition and rates, production rate, maximum rated capacity, and type of fuel):

400 ton / hour drum mix asphalt plant

Air Pollution Control Equipment: Construction Equipment Co. VMS-40 Venturi Wet Scrubber

Notes: Plant shall run @ 80% of full capacity - 320 tph

MARYLAND STATE
BAQNC

PRELIMINARY SURVEY

Plant F.O. DAY

Facility to be Tested Boeing

Survey Date 11-30-82

II. Stack Data:

Material of Construction . . . . . STEEL

Height of Sample Site from Ground Level, (ft). . . . . _____

Inside Cross Sectional Dimensions at Test Site . . . . . _____

Inside Cross Sectional Area at Test Site, (ft^2). . . . . _____

Port Length, (in). 2 1/2

Straight Duct Distance Before Test Site (stack diameters). . . . _____

Straight Duct Distance After Test Site (stack diameters) . . . . _____

Number of Points to be Sampled . . . . . _____

Point Identification:

dia stack 42"

stack dia. = 41 1/2"
port dia = 3"
port to top of stack = 42"
fan to sample port = 101"
ground to sample site = ~ 245"

stack temp. ~ 155-160 °F
stack pressure ~ 1-1 1/2
CO_2 = ~ 3 1/2 - 4 %
O_2 = ~ 17 %

MARYLAND STATE
BAQNC

PRELIMINARY SURVEY

Plant _____

Facility to be Tested _____

Survey Date _____

III. Point Location

Pt. No.	% of Diameter for Circular Stacks	Inches From Stack Wall	Inches From Previous Pt.

Calculated By:

Checked By:

MARYLAND STATE
BAQNC

PRELIMINARY SURVEY

Plant _____

Facility to be Tested _____

Survey Date _____

IV. Schematic of Process and Sample Area:

MARYLAND STATE
BAQNC

PRELIMINARY SURVEY

Plant _____

Facility to be Tested _____

Survey Date _____

V. Velocity Traverse at Test Site:

Pitot Tube ID _____

Temperature Measuring ID _____

Pitot Tube Coefficient _____

Operator _____

Pt. No.	Port ____		Port ____		Port ____		Port ____	
	ΔP (in. H_2O)	Temp. (°F)	ΔP (in. H_2O)	Temp. (°F)	ΔP (in. H_2O)	Temp. (°F)	ΔP (in. H_2O)	Temp. (°F)

MARYLAND STATE
BAQNC

PRELIMINARY SURVEY

Plant _____

Facility to be Tested _____

Survey Date _____

VI. Stack Gas Data at Test Site:

$\%CO_2$ _____ $\%O_2$ _____ $\%CO$ _____ $\%H_2O$ _____

Static Pressure: _____ in. H_2O gauge = _____ in. Hg gauge

Minimum Velocity Pressure: _____ in. H_2O

Maximum Velocity Pressure: _____ in. H_2O

Average Velocity Pressure: _____ in. H_2O

Average Stack Temperature: _____ ^oF

VII. Notes: Recommended nozzle size: _____ in. -- Recommended sampling time per point: _____ min/pt. -- _____

Survey by:

MARYLAND STATE
AIR MANAGEMENT ADMINISTRATION

PARTICULATE STACK SAMPLING DATA SUMMARY

Plant F.O. DAY FORRESTVILLE

Source BOEING MS 400 ASPHALT PLANT

RUN ID	12/6/82		12/7/82		12/8/82
1. C_p	.84		.84		.84
2. Q_m	76.366		47.297		46.647
3. T_{mavg}	103.7		94.9		84.0
4. P_{bar}	29.89		30.49		30.60
5. ΔH_{avg}	1.110		1.080		1.078
6. Q_w	602.9		298.8		332.3
7. W_d	28.7		13.4		23.3
8. W_t	137.9		49.4		69.7
9. $\%CO_2$	4.0		3.8		3.7
10. $\%O_2$	16.5		16.3		15.2
11. T_{savg}	157.1		152.6		153.6
12. $(\Delta P)^{1/2}_{avg}$	1.113		1.098		1.095
13. P_{savg}	29.831		30.429		30.549
14. A_s	9.39		9.39		9.39
15. D_n	.190		.190		.190
16. θ	130.85		84		84

RAMCON

ENVIRONMENTAL CORPORATION

RECEIVED

OCT 1988

AIR MANAGEMENT
ADMINISTRATION

SOURCE SAMPLING
for
PARTICULATE EMISSIONS
CORUN & GATCH, INC.
Aberdeen, Maryland
September 14, 1988

Ronald Corun
Corun & Gatch, Inc.

G. Sumner Buck, III
President

Sam Turner
Team Leader

RAMCON
ENVIRONMENTAL CORPORATION

October 17, 1988

Mr. Ronald Corun
Corun & Gatch, Inc.
1900 Bel Air Road
Fallston, MD 21047

Re: Particulate Emissions Tests- Aberdeen, Maryland

Dear Mr. Corun:

Enclosed you will find four copies of our report on the particulate emissions tests we conducted at Corun & Gatch's plant located in Aberdeen, Maryland. Based on our test results, your plant does pass both EPA New Source Performance Standards and those set by the State of Maryland. The average grain loading of the three test runs was below the allowable emissions standard set by EPA and the State of Maryland. Therefore, your plant is operating in compliance with State and Federal Standards.

You will want to sign the report covers and send two copies to:

Mr. Craig Holdefer
Maryland Air Management
Div. of Environmental Affairs
P. O. Box 13387
Baltimore, MD 21203

You will need to keep one copy of the report.

We certainly have enjoyed working with you and we look forward to serving you again in the future.

Sincerely,

G. Sumner Buck, III
President

GSBIII:mew

Enclosures

RAMCON BUILDING, 223 SCOTT STREET, MEMPHIS, TENNESSEE 38112
TELEPHONE 800/458-4567 IN TENNESSEE 901/458-7000 FAX 901-458-3868