United States
Environmental Protection
Agency

Office of Air Quality
Planning and Standards
Research Triangle Park NC 27711

EPA-450/3-80-037a
November 1980

Air

EPA

Industrial Surface Coating: Appliances — Background Information for Proposed Standards

Draft EIS

LARGE APPLIANCE
SURFACE COATING
AP-42
Section 4.2.2.11
Reference Number
1

Note: This is a reference cited in *AP 42, Compilation of Air Pollutant Emission Factors, Volume I Stationary Point and Area Sources.* AP42 is located on the EPA web site at www.epa.gov/ttn/chief/ap42/

The file name refers to the reference number, the AP42 chapter and section. The file name "ref02_c01s02.pdf" would mean the reference is from AP42 chapter 1 section 2. The reference may be from a previous version of the section and no longer cited. The primary source should always be checked.

NSPS

EPA-450/3-80-037a

Industrial Surface Coating: Appliances — Background Information for Proposed Standards

Emission Standards and Engineering Division

U.S. ENVIRONMENTAL PROTECTION AGENCY
Office of Air, Noise, and Radiation
Office of Air Quality Planning and Standards
Research Triangle Park, North Carolina 27711

November 1980

This report has been reviewed by the Emission Standards and Engineering Division of the Office of Air Quality Planning and Standards, EPA, and approved for publication. Mention of trade names or commercial products is not intended to constitute endorsement or recommendation for use. Copies of this report are available through the Library Services Office (MD-35), U.S. Environmental Protection Agency, Research Triangle Park, N.C. 27711, or from National Technical Information Services, 5285 Port Royal Road, Springfield, Virginia 22161.

Publication No. EPA-450/3-80-037a

ENVIRONMENTAL PROTECTION AGENCY

Background Information
and Draft
Environmental Impact Statement
for Industrial Surface Coating: Appliances

Prepared by:

Don R. Goodwin 12/2/80
(Date)

Don R. Goodwin
Director, Emission Standards and Engineering Division
U.S. Environmental Protection Agency
Research Triangle Park, NC 27711

1. The proposed standards of performance would limit emissions of volatile organic compounds from new, modified, and reconstructed appliance surface coating operations. Section 111 of the Clean Air Act (42 USC 7411), as amended, directs the Administrator to establish standards of performance for any category of new stationary source of air pollution which "...causes or contributes significantly to air pollution which may reasonably be anticipated to endanger public health or welfare." The States of Ohio, Illinois, Michigan, Kentucky, Tennessee, and California would be particularly affected.

2. Copies of this document have been sent to the following Federal Departments: Labor; Health and Human Services; Defense; Transportation; Agriculture; Commerce; Interior; and Energy; the National Science Foundation; and Council on Environmental Quality; to members of the State and Territorial Air Pollution Program Administrators (STAPPA) and the Association of Local Air Pollution Control Officials (ALAPCO); to EPA Regional Administrators; and to other interested parties.

3. The comment period for review of this document is 60 days. Mr. Gene Smith may be contacted regarding the date of the comment period.

4. For additional information contact:

   Mr. Gene Smith
   Standards Development Branch (MD-13)
   U.S. Environmental Protection Agency
   Research Triangle Park, NC 27711
   Telephone: (919) 541-5421

5. Copies of this document may be obtained from:

   U.S. EPA Library (MD-35)
   Research Triangle Park, NC 27711

   National Technical Information Service
   5285 Port Royal Road
   Springfield, VA 22161

TABLE OF CONTENTS

Chapter		Page
1	SUMMARY	1-1
1.1	Regulatory Alternatives	1-1
1.2	Environmental Impact	1-2
1.3	Economic Impact	1-4
1.4	References	1-4
2	INTRODUCTION	2-1
2.1	Background and Authority for Standards	2-1
2.2	Selection of Categories of Stationary Sources	2-5
2.3	Procedure for Development of Standards of Performance	2-6
2.4	Consideration of Costs	2-9
2.5	Consideration of Environmental Impacts	2-10
2.6	Impact on Existing Sources	2-11
2.7	Revision of Standards of Performance	2-11
2.8	References	2-11
3	THE LARGE APPLIANCE SURFACE COATING INDUSTRY	3-1
3.1	General	3-1
3.2	Processes or Facilities and Their Emissions	3-2
3.2.1	Coating Methods	3-4
3.2.1.1	Dip Coating	3-4
3.2.1.2	Flow Coating	3-4
3.2.1.3	Air and Airless Spray Coating	3-6
3.2.1.4	Electrostatic Spray Coating	3-6
3.2.1.5	Electrostatic Bell and Disk Coating	3-6
3.2.1.6	Electrostatic Dip Coating	3-10
3.2.2	Types of Coatings	3-10
3.2.2.1	Waterborne Coating	3-10
3.2.2.2	Conventional Organic-Solvent-Borne Coatings	3-13
3.2.2.3	Powder Coatings	3-14
3.2.2.4	High-Solids Coatings	3-16
3.3	Baseline Emissions	3-17
3.4	References	3-18
4	EMISSION CONTROL TECHNIQUES	4-1
4.1	General	4-1
4.2	Prime Coat Application	4-3

TABLE OF CONTENTS (continued)

Chapter		Page
	4.3 Topcoat Application	4-5
	4.3.1 Waterborne Coatings	4-5
	4.3.2 High-Solids Coatings	4-5
	4.3.3 Powder Coatings	4-6
	4.4 Capture Systems and Control Devices	4-6
	4.4.1 Carbon Adsorption	4-6
	4.4.2 Incineration	4-7
	4.4.2.1 Introduction	4-7
	4.4.2.2 Thermal Incineration	4-8
	4.4.2.3 Catalytic Incineration	4-9
	4.4.2.4 General Comments	4-10
	4.5 References	4-10
5	MODIFICATIONS AND RECONSTRUCTION	5-1
	5.1 Background	5-1
	5.2 Modifications	5-2
	5.2.1 Increased Production	5-2
	5.2.2 Additional Coating Stations	5-3
	5.2.3 Increased Film Thickness	5-3
	5.2.4 Changes in Raw Materials	5-3
	5.3 Reconstruction	5-4
	5.3.1 Increased Solvent Costs	5-4
	5.3.2 Changes in Material Costs	5-4
	5.3.3 Change in Product Demand	5-4
	5.4 References	5-5
6	MODEL PLANTS AND REGULATORY ALTERNATIVES	6-1
	6.1 General	6-1
	6.2 Model Plants	6-1
	6.3 Regulatory Alternatives	6-4
	6.3.1 Baseline Controls	6-4
	6.3.2 Regulatory Alternatives for Prime Coat Operations	6-7
	6.3.3 Regulatory Alternatives for Top Coat Operations	6-8
	6.4 References	6-11
	Annex to Chapter 6	6-12
7	ENVIRONMENTAL IMPACT	7-1
	7.1 General	7-1
	7.2 State Regulations and Controlled Emissions	7-2
	7.2.1 Revised State Implementation Plans and VOC Regulations	7-2
	7.2.2 State Regulations and Controlled Emissions	7-2
	7.3 Options: Uncontrolled and Controlled Emissions	7-4
	7.4 Water Pollution Impacts	7-5
	7.4.1 Paint Booth Effluents	7-5
	7.4.2 EDP Effluents	7-10
	7.4.3 Conclusions, Water Impacts	7-10

TABLE OF CONTENTS (continued)

Chapter		Page
7.5	Solid Waste Impacts	7-10
7.6	Energy Impact	7-11
7.7	Other Environmental Impacts	7-11
7.8	Other Environmental Concerns	7-11
7.8.1	Irreversible and Irretrievable Commitment of Resources	7-11
7.8.2	Environmental Impact of Delayed Standards	7-13
7.8.3	Environmental Impact of No Standards	7-13
7.9	References	7-13
8	ECONOMIC IMPACT	8-1
8.1	Industry Characterization	8-1
8.1.1	General Profile	8-1
8.1.2	Historical Trends	8-14
8.1.3	Future Trends	8-17
8.2	Cost Analysis	8-19
8.2.1	Introduction	8-19
8.2.2	New Facilities	8-21
8.2.2.1	Capital Costs	8-21
8.2.2.2	Annualized Costs	8-21
8.2.2.3	Cost Effectiveness	8-31
8.2.3	Modified/Reconstructed Facilities	8-35
8.3	Other Cost Considerations	8-38
8.3.1	The Clean Water Act	8-38
8.3.2	Occupational Exposure	8-38
8.3.3	Toxic Substances Control	8-39
8.4	Economic Impact Analysis	8-41
8.4.1	Summary	8-42
8.4.2	Economic Environment	8-43
8.4.2.1	Economic Structure	8-44
8.4.2.2	Cost of Capital	8-47
8.4.3	Methodology	8-48
8.4.3.1	Discounted Cash Flow Approach	8-50
8.4.3.2	Projected Ranking Criterion	8-53
8.4.3.3	Determining the Impacts of the Control Alternatives	8-55
8.4.4	Economic Impacts	8-56
8.4.4.1	Price Impacts	8-63
8.4.4.2	Rate of Return Impacts	8-64
8.4.4.3	Incremental Capital Requirements	8-64
8.5	Potential Socioeconomic and Inflationary Impacts	8-71
8.6	References	8-73

TABLE OF CONTENTS (continued)

Chapter	Page
Appendix A--Evolution of the Background Information Document . .	A-1
Appendix B--Index to Environmental Impact Considerations	B-1
Appendix C--Emission Source Test Data	C-1
Appendix D--Emission Measurement and Monitoring	D-1
Appendix E--Environmental, Energy, and Economic Impacts--Other Appliances	E-1

LIST OF TABLES

Number		Page
1-1	Assessment of Environmental and Economic Impacts for Each Regulatory Alternative Considered	1-3
4-1	Common Methods of Reduction of VOCs in the Large Appliance Surface Coating Industry	4-4
6-1	Model Large Appliance Surface Coating Plants	6-5
6-2	Equipment, Energy, and Manpower Requirements for Model Plants	6-6
6-3	Model Plant 1: Annual VOC Emissions	6-9
6-4	Model Plant 2: Annual VOC Emissions	6-9
6-5	Model Plant 3: Annual VOC Emissions	6-10
6-6	Model Plant 4: Annual VOC Emissions	6-10
7-1	Annual VOC Emissions Estimates: 1976, 1981, 1986	7-6
7-2	Estimates of Annual Energy Consumption: 1976, 1981, 1986	7-12
8-1	Consumer Price Indexes, Annual Average	8-3
8-2	Wholesale Price Index, Annual Average	8-4
8-3	Leading Manufacturers of Large Appliances: 1978	8-5
8-4	Values of Annual Shipments of Large Appliances by Product: 1967-1977	8-10
8-5	Annual Production by Product: 1967-1977	8-11
8-6	Annual Production, Capacity Utilization, and Implied Production Capacity, by SIC, of the Large Appliance Industry: 1976 and 1977	8-13
8-7	Percent of Market Penetration of Selected Large Appliances: 1976 and 1977	8-15
8-8	U.S. Exports of Large Appliances: 1975-1976	8-15
8-9	Percent Per Year Production Change in Large Appliance Manufacturing: 1968-1977	8-18
8-10	Five-Year Forecast for Selected Appliances	8-18
8-11	Regulatory Alternatives and Control Options Considered in the Economic Analysis	8-20
8-12	Key Parameters for Control Options Applied to Model Plant 1	8-22
8-13	Key Parameters for Control Options Applied to Model Plant 2	8-23

LIST OF TABLES (continued)

Number		Page
8-14	Key Parameters for Control Options Applied to Model Plant 3	8-24
8-15	Key Parameters for Control Options Applied to Model Plant 4	8-25
8-16	Capital Costs of Control Options Applied to Model Plants	8-26
8-17	Itemized Installed Capital Costs for Control Options Applied to Model Plant 1	8-27
8-18	Itemized Installed Capital Costs for Control Options Applied to Model Plant 2	8-28
8-19	Itemized Installed Capital Costs for Control Options Applied to Model Plant 3	8-29
8-20	Itemized Installed Capital Costs for Control Options Applied to Model Plant 4	8-30
8-21	Total Annualized Costs of Control Options	8-32
8-22	Annualized Costs for Control Options Applied to Model Plant 1	8-33
8-23	Annualized Costs for Control Options Applied to Model Plant 2	8-33
8-24	Annualized Costs for Control Options Applied to Model Plant 3	8-34
8-25	Annualized Costs for Control Options Applied to Model Plant 4	8-35
8-26	Marginal Cost Effectiveness for Control Options Applied to Model Plant 1	8-36
8-27	Marginal Cost Effectiveness for Control Options Applied to Model Plant 2	8-36
8-28	Marginal Cost Effectiveness for Control Options Applied to Model Plant 3	8-37
8-29	Marginal Cost Effectiveness for Control Options Applied to Model Plant 4	8-37
8-30	Threshold Limit Values and Lower Explosive Limits of Typical Adhesive and Release Solvents.	8-40
8-31	Concentration Ratios of Four Largest Firms in the Large Appliance Industry Defined by Value of Shipments.	8-45
8-32	Cost of Equity Capital for the Large Appliance Industry	8-49
8-33	Definitions	8-51
8-34	Capital and Operating Costs for Model Plants	8-58
8-35	Definition of Regulatory Alternatives	8-60
8-36	Model Plant I: Ranking of Coating Lines by Present Worth-Cost	8-60
8-37	Model Plant II: Ranking of Coating Lines by Present Worth-Cost	8-61
8-38	Model Plant III: Ranking of Coating Lines by Present Worth-Cost	8-61
8-39	Model Plant IV: Ranking of Coating Lines by Present Worth-Cost	8-62

LIST OF TABLES (continued)

Number		Page
8-40	Model Line 1: Price Impacts of Control Options, Constrained Case	8-65
8-41	Model Line 2: Price Impacts of Control Options, Constrained Case	8-65
8-42	Model Line 3: Price Impacts of Control Options, Constrained Case	8-66
8-43	Model Line 4: Price Impacts of Control Options, Constrained Case	8-66
8-44	Model Line 1: Return on Investment Impacts of Control Options, Constrained Case	8-67
8-45	Model Line 2: Return on Investment Impacts of Control Options, Constrained Case	8-67
8-46	Model Line 3: Return on Investment Impacts of Control Options, Constrained Case	8-68
8-47	Model Line 4: Return on Investment Impacts of Control Options, Constrained Case	8-68
8-48	Model Line 1: Incremental Capital Requirements of Control Options	8-69
8-49	Model Line 2: Incremental Capital Requirements of Control Options	6-69
8-50	Model Line 3: Incremental Capital Requirements of Control Options	8-70
8-51	Model Line 4: Incremental Capital Requirements of Control Options	8-70
8-52	Potential Incremental Annualized Cost of Compliance with Regulatory Alternative A-III/B-III, 1986	8-72

LIST OF FIGURES

Number		Page
3-1	Block Diagram of Large Appliance Manufacturing Operations	3-3
3-2	Typical Applications of Coating Methods in the Large Appliance Industry	3-5
3-3	Diagram of an Airless Spray Gun With an Attached Paint Heater	3-7
3-4	Diagram of Stationary Bell	3-8
3-5	Diagram of a Reciprocating Disk and Spray Booth	3-9
3-6	Diagram of an Electrostatic Dip Coating System	3-11
3-7	Plan View of a Powder Coating Line	3-15
7-1	Annual Prime Coat Emissions for Various Regulatory Alternatives	7-7
7-2	Annual Topcoat Emissions for Various Regulatory Alternatives	7-8
7-3	Combined Annual Emissions (Prime Coat and Topcoat) for Various Regulatory Alternatives	7-9
8-1	Size Distribution of Large Appliance Manufacturing Plants According to Employment: 1978	8-9

1. SUMMARY

1.1 REGULATORY ALTERNATIVES

Section 111 (42 USC 7411) of the Clean Air Act[1] as amended directs the Administrator to establish standards of performance for any category of new stationary sources of air pollution that "causes, or contributes significantly to, air pollution which may reasonably be anticipated to endanger public health or welfare." Appliance surface coating operations have been determined to fall into this classification and standards of performance have been developed for volatile organic compounds (VOCs).

The material in this document pertains to the surface coating of traditional large household appliances, the industry listed in the "Priority List and Additions to the List of Categories of Stationary Sources."[2] The decision to include other products such as lighting fixtures, heat pumps, and dehumidifiers in the source category was made subsequent to the development of the majority of these materials. The decision was made because many appliances not customarily considered to be large household appliances are similar in size and shape to common household appliances such as refrigerators, freezers, washers, dryers, and ranges. The coating application methods--flow coat, dip coat, electrodeposition (EDP), and air, airless, and electrostatic spray--are identical. These additional appliance coating operations use coating materials similar to those used in large appliance coating operations. Coating performance specifications are also similar except for slight variations depending upon whether the unit is designed for indoor or outdoor use. Therefore, these operations produce the same types, and proportionately the same quantities, of VOC emissions as large appliance surface coating operations.

In addition, these other segments of the appliance industry would not be subject to other standards either under development or proposed by the Agency. Because these other products have been added, the environmental

impacts forecast here may be somewhat conservative. That is, the direction or trend of the impact is correct, but the magnitude may be greater than that shown. The environmental and economic impacts of imposing any of the several regulatory alternatives on manufacturers coating these other products are addressed in Appendix E.

Three regulatory alternatives are considered for prime coat operations, and four are considered for topcoat operations. For each operation, the first involves no additional regulation beyond that imposed by the States. The second regulatory alternative in each case is the promulgation of a standard equivalent to the assumed no-additional-regulation (no NSPS) baseline. For prime coat operations, the third alternative would limit emissions to levels equivalent to those resulting from the application of waterborne prime coats applied by EDP.

For topcoat operations, the third regulatory alternative would reduce emissions by 30 percent from the no NSPS baseline. This limitation could be achieved through the use of 70 percent solids coatings or through the use of lower solids (65.5 percent) coatings plus incineration of the exhaust gas from the topcoat oven. The fourth alternative would eliminate topcoat emissions from new sources and could only be achieved through the use of powder coatings.

1.2 ENVIRONMENTAL IMPACT

Regulatory Alternatives A-I and B-I (no NSPS for prime coat and top coat, respectively), would create no environmental impact, either beneficial or adverse. Regulatory Alternatives A-II and B-II would reduce VOC emissions by a negligible amount. Regulatory Alternative A-III would reduce industry prime coat emissions by about 10 percent (175 Mg/yr) by 1986. Regulatory Alternative B-III would reduce industry topcoat emissions 10 percent (225 Mg/yr). In addition to eliminating topcoat emissions, Regulatory Alternative B-IV also reduces prime coat emissions because in some cases powder can be applied direct-to-metal. This alternative would reduce total industry emissions by 40 percent (1,800 Mg/yr) by 1986.

Little adverse environmental, energy, or economic impact would result from any of the regulatory alternatives, primarily because changes in coatings technology or application methods would not be required for compliance. A matrix summarizing the impacts is presented in Table 1-1.

TABLE 1-1. ASSESSMENT OF ENVIRONMENTAL AND ECONOMIC IMPACTS FOR EACH REGULATORY ALTERNATIVE CONSIDERED

Administration action	Air impact	Water impact	Solid waste impact	Energy impact	Noise impact	Economic impact
Regulatory Alternative A-1 or B-I (no standards)	0	0	0	0	0	0
Regulatory Alternative A-II or B-II	+2**	+1	+1	0	0	0
Regulatory Alternative A-III	+2**	-2**	+1	+1	0	-1
Regulatory Alternative B-III (70 percent solids)	+2**	+1	+1	0	0	0
Regulatory Alternative B-III (Incineration)	+2**	+1	+1	-1	0	-1
Regulatory Alternative B-IV	+3**	+3**	+1	+1	0	+2**
Delayed standards	-1	-1	-1	0	0	0

KEY:
+ Beneficial impact
- Adverse impact
0 No impact
1 Negligible impact
2 Small impact
3 Moderate impact
4 Large impact
* Short-term impact
** Long-term impact
*** Irreversible impact

1.3 ECONOMIC IMPACT

No major adverse economic impacts on the appliance industry are likely to occur under any of the regulatory alternatives. In every case, the estimated price impact is less than 1 percent of the unit cost of an appliance.

1.4 REFERENCES

1. United States Congress. Clean Air Act, as amended August 1977. 42 USC 7401 et seq. Washington, DC. U.S. Government Printing Office. November 1977.

2. U.S. Environmental Protection Agency. Priority List and Addition to the List of Categories of Stationary Sources. Federal Register. 44(163): 49222. August 21, 1979.

2. INTRODUCTION

2.1 BACKGROUND AND AUTHORITY FOR STANDARDS

Before standards of performance are proposed as a Federal regulation, air pollution control methods available to the affected industry and the associated costs of installing and maintaining the control equipment are examined in detail. Various levels of control based on different technologies and degrees of efficiency are expressed as regulatory alternatives. Each of these alternatives is studied as a prospective basis for a standard. The alternatives are investigated in terms of their impacts on the economics and well-being of the industry, impacts on the national economy, and impacts on the environment. This document summarizes the information obtained through these studies so that interested persons will be able to see the information considered by the U.S. Environmental Protection Agency (EPA) in the development of the proposed standards.

Standards of performance for new stationary sources are established under Section 111 (42 USC 7411) of the Clean Air Act as amended, herein referred to as the Act.[1] Section 111 directs the Administrator to establish standards of performance for any category of new stationary source of air pollution that ". . . causes, or contributes significantly to, air pollution which may reasonably be anticipated to endanger public health or welfare."

The Act requires that standards of performance for stationary sources reflect ". . . the degree of emission reduction achievable which (taking into consideration the cost of achieving such emission reduction, and any nonair quality health and environmental impact and energy requirements) the Administrator determines has been adequately demonstrated for that category of sources." The standards apply only to stationary sources, the construction or modification of which commences after regulations are proposed by publication in the Federal Register.

The 1977 amendments to the Act altered or added numerous provisions that apply to the process of establishing standards of performance.

- EPA is required to list the categories of major stationary sources that have not already been listed and regulated under standards of performance. Regulations must be promulgated for these new categories on the following schedule:

  - 25 percent of the listed categories by August 7, 1980;

  - 75 percent of the listed categories by August 7, 1981; and

  - 100 percent of the listed categories by August 7, 1982.

- A governor of a State may apply to the Administrator to add a category not on the list or may apply to the Administrator to have a standard of performance revised.

- EPA is required to review the standards of performance every 4 years and, if appropriate, to revise them.

- EPA is authorized to promulgate a standard based on design, equipment, work practice, or operational procedures when a standard based on emission levels is not feasible.

- The term "standards of performance" is redefined, and a new term, "technological system of continuous emission reduction," is defined. The new definitions clarify that the control system must be continuous and may include a low-polluting or nonpolluting process or operation.

- The time between the proposal and promulgation of a standard under Section 111 of the Act may be extended to 6 months.

Standards of performance, by themselves, do not guarantee protection of health or welfare because they are not designed to achieve any specific air quality levels. Rather, they are designed to reflect the degree of emission limitation achievable through application of the best adequately demonstrated technological system of continuous emission reduction, considering the cost of achieving such emission reduction, any nonair quality health and environmental impacts, and energy requirements.

Congress had several reasons for adopting this approach. First, standards with a degree of uniformity are needed to prevent situations where some States may attract industries by relaxing standards relative to

other States. Second, stringent standards enhance the potential for long-term growth. Third, stringent standards may help achieve long-term cost savings by eliminating the need for more expensive retrofitting should it be necessary to reduce pollution ceilings in the future. Fourth, certain types of standards for coal-burning sources can adversely affect the coal market by driving up the price of low-sulfur coal or effectively excluding certain coals from the reserve base because their untreated pollution potentials are high. Congress did not intend for New Source Performance Standards to contribute to these problems. Fifth, the standard-setting process was intended to create incentives for improved technology.

Promulgation of standards of performance does not prevent State or local agencies from adopting more stringent emission limitations for the same sources. States are free under Section 116 (42 USC 7416) of the Act to establish even more stringent emission limits than those established under Section 111 or those necessary to attain or maintain the National Ambient Air Quality Standards (NAAQS) under Section 110 (42 USC 7410). Thus, new sources may in some cases be subject to limitations more stringent than standards of performance under Section 111, and prospective owners and operators of new sources should be aware of this possibility in planning for such facilities.

A similar situation may arise when a major emitting facility is to be constructed in a geographic area that falls under the provisions for the prevention of significant deterioration of air quality in Part C of the Act. These provisions require, among other things, that major emitting facilities to be constructed in such areas are to be subject to best available control technology. The term best available control technology (BACT), as defined in the Act, means:

> . . . an emission limitation based on the maximum degree of reduction of each pollutant subject to regulation under this Act emitted from, or which results from, any major emitting facility, which the permitting authority, on a case-by-case basis, taking into account energy, environmental, and economic impacts and other costs, determines is achievable for such facility through application of production processes and available methods, systems, and techniques, including fuel cleaning or treatment or innovative fuel combustion techniques for control of each such pollutant. In no event shall application of "best available control technology" result in emissions of

> any pollutants which will exceed the emissions allowed by any applicable standard established pursuant to section 111 or 112 of this Act. (42 USC 7479 (3))[1]

Where feasible, standards of performance are normally structured in terms of numerical emission limits. However, alternative approaches are sometimes necessary. In some cases physical measurement of emissions from a new source may be impractical or exorbitantly expensive. Section 111(h) provides that the Administrator may promulgate a design or equipment standard in cases where it is not feasible to prescribe or enforce a standard of performance. For example, hydrocarbon emissions from storage vessels for petroleum liquids are greatest during tank filling. The nature of the emissions--high concentrations for short periods during filling and low concentrations for longer periods during storage--and the configuration of storage tanks make direct emission measurement impractical. Therefore, a more practical approach to standards of performance for storage vessels has been equipment specification.

In addition, Section 111(j) authorizes the Administrator to waive compliance to permit a source to use innovative continuous emission control technology. To grant the waiver, the Administrator must find that:

- A substantial likelihood exists that the technology will produce greater emission reductions than the standards require or an equivalent reduction at lower economic, energy, or environmental cost;
- The proposed system has not been adequately demonstrated;
- The technology will not cause or contribute to an unreasonable risk to the public health, welfare, or safety;
- The governor of the State where the source is located consents; and
- The waiver will not prevent the attainment or maintenance of any ambient standard.

A waiver may have conditions attached to ensure that the source will not prevent attainment of any NAAQS. Any such condition will have the force of a performance standard. Finally, waivers have definite end dates and may be terminated earlier if the conditions are not met or if the system fails to perform as expected. In such a case, the source may be given up to 3 years to meet the standards with a mandatory progress schedule.

2.2 SELECTION OF CATEGORIES OF STATIONARY SOURCES

Section 111 of the Act directs the Adminstrator to list categories of stationary sources. The Administrator ". . . shall include a category of sources in such list if in his judgment it causes, or contributes significantly to, air pollution which may reasonably be anticipated to endanger public health or welfare."[1] Proposal and promulgation of standards of performance are to follow.

Since passage of the Clean Air Amendments of 1970, considerable attention has been given to the development of a system for assigning priorities to various source categories. The approach specifies areas of interest through consideration of the broad strategy of the Agency for implementing the Clean Air Act. Often, these "areas" are actually pollutants emitted by stationary sources. Source categories that emit these pollutants are evaluated and ranked by a process involving such factors as:

- Level of emission control (if any) already required by State regulations,
- Estimated levels of control that might be required from standards of performance for the source category,
- Projections of growth and replacement of existing facilities for the source category, and
- Estimated incremental amount of air pollution that could be prevented in a preselected future year by standards of performance for the source category.

Sources for which new source performance standards were promulgated or under development during 1977, or earlier, were selected based on these criteria.

The Act Amendments of August 1977 establish specific criteria to be used in determining priorities for all major source categories not yet listed by EPA. These are:

- Quantity of air pollutant emissions that each such category will emit, or will be designed to emit;
- Extent to which each such pollutant may reasonably be anticipated to endanger public health or welfare; and
- Mobility and competitive nature of each such category of sources and the consequent need for nationally applicable new source standards of performance.

The Administrator is to promulgate standards for these categories according to the schedule referred to earlier.

In some cases it may not be feasible to develop immediately a standard for a high-priority source category. This problem might arise when a program of research is needed to develop control techniques or because techniques for sampling and measuring emissions may require refinement. In the development of standards, differences in the time required to complete the necessary investigation for different source categories must also be considered. For example, substantially more time may be necessary if numerous pollutants must be investigated from a single source category. Further, even late in the development process the schedule for completion of a standard may change. For example, inablility to obtain emission data from well-controlled sources in time to pursue the development process in a systematic fashion may force a change in scheduling. Nevertheless, priority ranking is, and will continue to be, used to establish the order in which projects are initiated and resources assigned.

After the source category has been chosen, the types of facilities within the source category to which the standard will apply must be determined. A source category may have several facilities that cause air pollution and the cost of controlling these emissions to vary widely. Economic studies of the source category and of applicable control technology may show that air pollution control is better served by applying standards to the more severe pollution sources. For this reason, and because there is no adequately demonstrated system for controlling emissions from certain facilities, standards often do not apply to all facilities at a source. For the same reasons, the standards may not apply to all air pollutants emitted. Thus, although a source category may be selected to be covered by a standard of performance, not all pollutants or facilities within that source category may be covered by the standards.

2.3 PROCEDURE FOR DEVELOPMENT OF STANDARDS OF PERFORMANCE

Standards of performance must:

- Realistically reflect best demonstrated control practice;
- Adequately consider the cost, the nonair quality health and environmental impacts, and the energy requirements of such control;

- Apply to existing sources that are modified or reconstructed as well as to new installations; and
- Meet these conditions for all variations of operating conditions considered anywhere in the country.

The objective of a program for developing standards is to identify the best technological system of continuous emission reduction that has been adequately demonstrated. The standard-setting process involves three principal phases of activity: information gathering, analysis of the information, and development of the standard of performance.

During the information-gathering phase, industries are queried through a telephone survey, letters of inquiry, and plant visits by EPA representatives. Information is also gathered from many other sources, and a literature search is conducted. From the knowledge acquired about the industry, EPA selects certain plants at which emission tests are conducted to provide reliable data that characterize the pollutant emissions from well-controlled existing facilities.

In the second phase of a project, the information about the industry and the pollutants emitted is used in analytical studies. Hypothetical "model plants" are defined to provide a common basis for analysis. The model plant definitions, national pollutant emission data, and existing State regulations governing emissions from the source category are then used in establishing "regulatory alternatives." These regulatory alternatives are essentially different levels of emission control.

EPA conducts studies to determine the impact of each regulatory alternative on the economics of the industry and on the national economy, on the environment, and on energy consumption. From several possibly applicable alternatives, EPA selects the single most efficient regulatory alternative as the basis for a standard of performance for the source category under study.

In the third phase of a project, the selected regulatory alternative is translated into a standard of performance, which, in turn, is written in the form of a Federal regulation. The Federal regulation, when applied to newly constructed plants, will limit emissions to the levels indicated in the selected regulatory alternative.

As early as is practical in each standard-setting project, EPA representatives discuss with members of the National Air Pollution Control Techniques Advisory Committee (NAPCTAC) the possibilities of a standard and the form it might take. Industry representatives and other interested parties also participate in these meetings.

The information acquired in the project is summarized in the Background Information Document (BID). The BID, the standard, and a preamble explaining the standard are widely circulated to the industry being considered for control, environmental groups, other government agencies, and offices within EPA. Through this extensive review process, the points of view of expert reviewers are considered as changes are made to the documentation.

A "proposal package" is assembled and sent through the offices of EPA Assistant Administrators for concurrence before the proposed standards are officially endorsed by the EPA Administrator. After they are approved by the Administrator, the preamble and the proposed regulation are published in the Federal Register.

As a part of the Federal Register announcement of the proposed standards, the public is invited to participate in the standard-setting process. EPA invites written comments on the proposal and also holds a public hearing to discuss the proposed standards with interested parties. All public comments are summarized and incorporated into a second volume of the BID. All information reviewed and generated in studies in support of the standard of performance is available to the public in a "docket" on file in Washington, DC.

Comments from the public are evaluated, and the standard of performance may be altered in response to the comments.

The significant comments and EPA's position on the issues raised are included in the "preamble" of a "promulgation package," which also contains the draft of the final regulation. The regulation is then subjected to another round of review and refinement until it is approved by the EPA Administrator. After the Administrator signs the regulation, it is published as a "final rule" in the Federal Register.

2.4 CONSIDERATION OF COSTS

Section 317 (42 USC 7617) of the Act requires an economic impact assessment with respect to any standard of performance established under Section 111 of the Act. The assessment is required to contain an analysis of:

- Costs of compliance with the regulation, including the extent to which the cost of compliance varies, depending on the effective date of the regulation and the development of less expensive or more efficient methods of compliance;
- Potential inflationary or recessionary effects of the regulation;
- Effects the regulation might have on small business with respect to competition;
- Effects of the regulation on consumer costs; and
- Effects of the regulation on energy use.

Section 317 also requires that the economic impact assessment be as extensive as practicable.

The economic impact of a proposed standard upon an industry is usually addressed both in absolute terms and in terms of the control costs that would be incurred as a result of compliance with typical, existing State control regulations. An incremental approach is necessary because both new and existing plants would be required to comply with State regulations in the absence of a Federal standard of performance. This approach requires a detailed analysis of the economic impact from the cost differential that would exist between a proposed standard of performance and the typical State standard.

Air pollutant emissions may cause water pollution problems, and captured potential air pollutants may pose a solid waste disposal problem. The total environmental impact of an emission source must therefore be analyzed and the costs determined whenever possible.

A thorough study of the profitability and price-setting mechanisms of the industry is essential to the analysis so an accurate estimate of potential adverse economic impacts can be made for proposed standards. It is also essential to know the capital requirements for pollution control systems already placed on plants so additional capital requirements necessitated by these Federal standards can be placed in proper perspective.

Finally, it is necessary to assess the availability of capital to provide the additional control equipment needed to meet the standards of performance.

2.5 CONSIDERATION OF ENVIRONMENTAL IMPACTS

Section 102(2)(C) of the National Environmental Policy Act (NEPA)[2] of 1969 requires Federal agencies to prepare detailed environmental impact statements on proposals for legislation and other major Federal actions significantly affecting the quality of the human environment. The objective of NEPA is to build into the decisionmaking process of Federal agencies a careful consideration of all environmental aspects of proposed actions.

In a number of legal challenges to standards of performance for various industries, the United States Court of Appeals for the District of Columbia Circuit has held that environmental impact statements need not be prepared by the Agency for proposed actions under Section 111 of the Clean Air Act. Essentially, the Court of Appeals has determined that the best system of emission reduction requires that the Administrator take into account counter-productive environmental effects of a proposed standard, as well as economic costs to the industry. On this basis, therefore, the Court established a narrow exemption from NEPA for EPA determination under Section 111.

In addition to these judicial determinations, the Energy Supply and Environmental Coordination Act (ESECA)[3] of 1974 specifically exempted proposed actions under the Clean Air Act from NEPA requirements. According to Section 7(c)(1), "No action taken under the Clean Air Act shall be deemed a major Federal action significantly affecting the quality of the human environment within the meaning of the National Environmental Policy Act of 1969." (15 USC 793(c)(1))

Nevertheless, the Agency has concluded that the preparation of environmental impact statements could have beneficial effects on certain regulatory actions. Consequently, although not legally required to do so by Section 102 (2)(C) of NEPA, EPA has adopted a policy requiring that environmental impact statements be prepared for various regulatory actions, including standards of performance developed under Section 111 of the Act. This voluntary preparation of environmental impact statements, however, in no way legally subjects the Agency to NEPA requirements.

To implement this policy, a separate section in this document is devoted solely to an analysis of the potential environmental impacts associated with the proposed standards. Both adverse and beneficial impacts in such areas as air and water pollution, increased solid waste disposal, and increased energy consumption are discussed.

2.6 IMPACT ON EXISTING SOURCES

Section 111 of the Act defines a new source as ". . . any stationary source, the construction or modification of which is commenced . . ." after the proposed standards are published. An existing source is redefined as a new source if "modified" or "reconstructed" as defined in amendments to the general provisions of Subpart A of 40 CFR Part 60,[4] which were promulgated in the Federal Register, December 16, 1975.

Promulgation of a standard of performance requires States to establish standards of performance for existing sources in the same industry under Section 111(d) of the Act if the standard for new sources limits emissions of a "designated" pollutant (i.e., a pollutant for which air quality criteria have not been issued under Section 108 (42 USC 7408) or which has not been listed as a hazardous pollutant under Section 112) (42 USC 7412). If a State does not act, EPA must establish such standards. General provisions outlining procedures for control of existing sources under Section 111(d) were promulgated November 17, 1975, as Subpart B of 40 CFR Part 60.[5]

2.7 REVISION OF STANDARDS OF PERFORMANCE

Congress was aware that the level of air pollution control achievable by any industry may improve with technological advances. Accordingly, Section 111 of the Act provides that the Administrator ". . . shall, at least every 4 years, review and, if appropriate, revise . . ." the standards. Revisions are made to ensure that the standards continue to reflect the best systems that become available in the future. Such revisions will not be retroactive, but will apply to stationary sources constructed or modified after proposal of the revised standards.

2.8 REFERENCES

1. United States Congress. Clean Air Act, as amended August 1977. 42 USC 7401 et seq. Washington, DC. U.S. Government Printing Office. November 1977.

2. United States Congress. National Environmental Policy Act. 42 USC 4332. Washington, DC. U.S. Government Printing Office. 1969.

3. United States Congress. Energy Supply and Environmental Coordination Act. 15 USC 793(c)(1). Washington, DC. U.S. Government Printing Office. 1974.

4. Code of Federal Regulations. Title 40, Chapter I. Subchapter A, Part 60. Washington, DC. Office of the Federal Register. December 16, 1975.

5. Code of Federal Regulations. Title 40, Chapter I. Subchapter B, Part 60. Washington, DC. Office of the Federal Register. November 17, 1975.

3. THE LARGE APPLIANCE SURFACE COATING INDUSTRY

3.1 GENERAL

For developing New Source Performance Standards (NSPS), the U.S. Environmental Protection Agency (EPA) has researched those segments of the appliance surface coating industry consisting of manufacturing facilities producing some appliances classified in Standard Industrial Classification (SIC)[1] codes as follows:

SIC 3631: Household Cooking Equipment;

SIC 3632: Household Refrigerators and Home and Farm Freezers;

SIC 3633: Household Laundry Equipment; and

SIC 3639: Household Appliances, Not Elsewhere Classified.

This NSPS is specifically intended to control the volatile organic compound (VOC) emissions resulting from the surface coating of large appliances. EPA is adding to the general provisions of 40 CFR Part 60 the definition of a VOC as "any organic compound which participates in atmospheric photochemical reactions; or which is measured by a reference method, an equivalent method, an alternative method, or which is determined by procedures specified under any subpart."

Approximately 190 facilities for manufacturing large appliances are found in the continental United States, distributed across 29 States. Ohio, Illinois, Michigan, Kentucky, Tennessee, and California have the largest numbers of plants.[2] The size of the facility and the number of employees vary from plant to plant, but an average plant employs about 1,000 people.

A typical large appliance manufacturing plant produces only one or two related products, such as refrigerators and freezers or washers and dryers. However, in at least one case (General Electric's Appliance Park in Louisville, Kentucky) several facilities are located at the same site. Even in this instance, however, each facility has a separate operating area.

Regardless of the appliance manufactured or the method of coating it, similar manufacturing operations are involved (Figure 3-1). Coiled or sheet metal enters the facility and is cut and stamped into the proper shapes. The major parts are then welded together with minor or small parts not yet attached. The welded parts are cleaned with organic degreasers and mild caustic soda to remove grease and mill scale accumulated during handling. After treatment, parts are rinsed with cleaning solutions.

The next step is treatment in a phosphate bath. This process commonly uses iron or zinc phosphate. A microscopic matrix of crystalline phosphate is deposited on the surface of the metal, increasing the surface area of the part to be coated, allowing superior coating adhesion, and yielding corrosion resistance. The process leaves the surface acidic, however, and care must be taken to ensure that this acidity does not interfere with the normal curing mechanism. Such interference is not normally a problem because most thermosetting coatings respond positively or not at all to acid catalysis.

Prime coat application and prime coat cure are the next process steps and are discussed later in this chapter. Topcoat application and topcoat cure are also discussed. In some cases, parts receive only a prime coat before assembly, while others receive a top coat directly after metal preparation. These special cases are demonstrated by the loops in Figure 3-1. After coating application and cure, the coated parts converge at the assembly area.

3.2 PROCESSES OR FACILITIES AND THEIR EMISSIONS

Several methods are commonly used to coat parts for large appliances. These methods are: dip coating, flow coating, air and airless spray coating, electrostatic spray coating, electrostatic bell or disk coating, and electrostatic dip coating. Spray and bell coating equipment is available both in manual and automatic versions. Appliance coatings fall into three categories:

- Low-organic-solvent coatings: waterborne and "high-solids" coatings (>62 percent solids*),
- Conventional organic-solvent-borne coatings (~30 percent solids), and
- Powder coatings.

---

*All percentages are by volume unless otherwise stated.

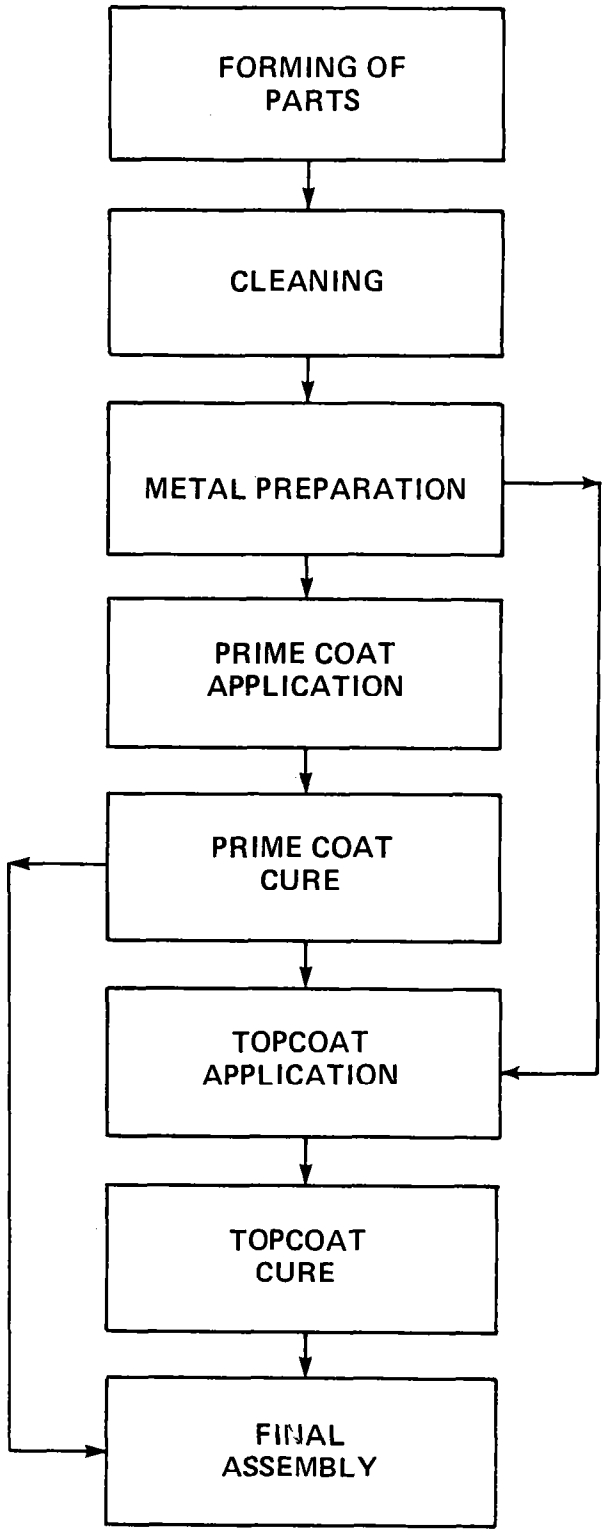

Figure 3-1. Block diagram of large appliance manufacturing operations.

3.2.1 Coating Methods

The concept of transfer efficiency must be defined before the coating methods are described. In this document transfer efficiency is the ratio of the amount of paint solids deposited on the surface to the total amount of coating solids used. For liquid spray systems, therefore, transfer efficiency is the ratio of the solids adhering to the coated part to the solids delivered through the application device. For recycling systems (dip coats, flow coats, and powder systems), transfer efficiency is the ratio of solids that adhere to the coated part to the solids delivered, excluding the solids recovered for reuse.

Typical uses for the coating methods discussed below are shown in Figure 3-2.

3.2.1.1 Dip Coating. Dip coating is used primarily to apply a single prime coat to parts that are not visible after assembly.[2] This method can be used where the coating surface need not be smooth. The equipment consists of a large main tank in which the mixed coating is contained. An overhead conveyor lowers each part into the tank, where the coating is applied. As they emerge from the tank, the coated parts move into an area where excess paint drips off. The excess paint is collected and returned to the main tank.

The paint in the main tank is kept at a constant solids concentration by the addition of fresh, properly mixed paint and water or organic solvent to account for usage and evaporation. This recycling and reuse ensures an overall transfer efficiency of about 85 percent.

3.2.1.2 Flow Coating. Flow coating is accomplished by engulfing the part in a stream of the coating.[3] The coating is pumped from a holding tank into mechanical arms that are fitted with nozzles. The arms pass over the part "flowing" the coating over it. Excess paint drips off the part and back into the holding tank for reuse. This recovery ensures a transfer efficiency of about 85 percent.

Flow coating is a single coat or prime coat method resulting in a coating of variable and uneven thickness. It is commonly used as a single coat method to coat parts not visible after assembly. Flow coating equipment is simple and readily available.

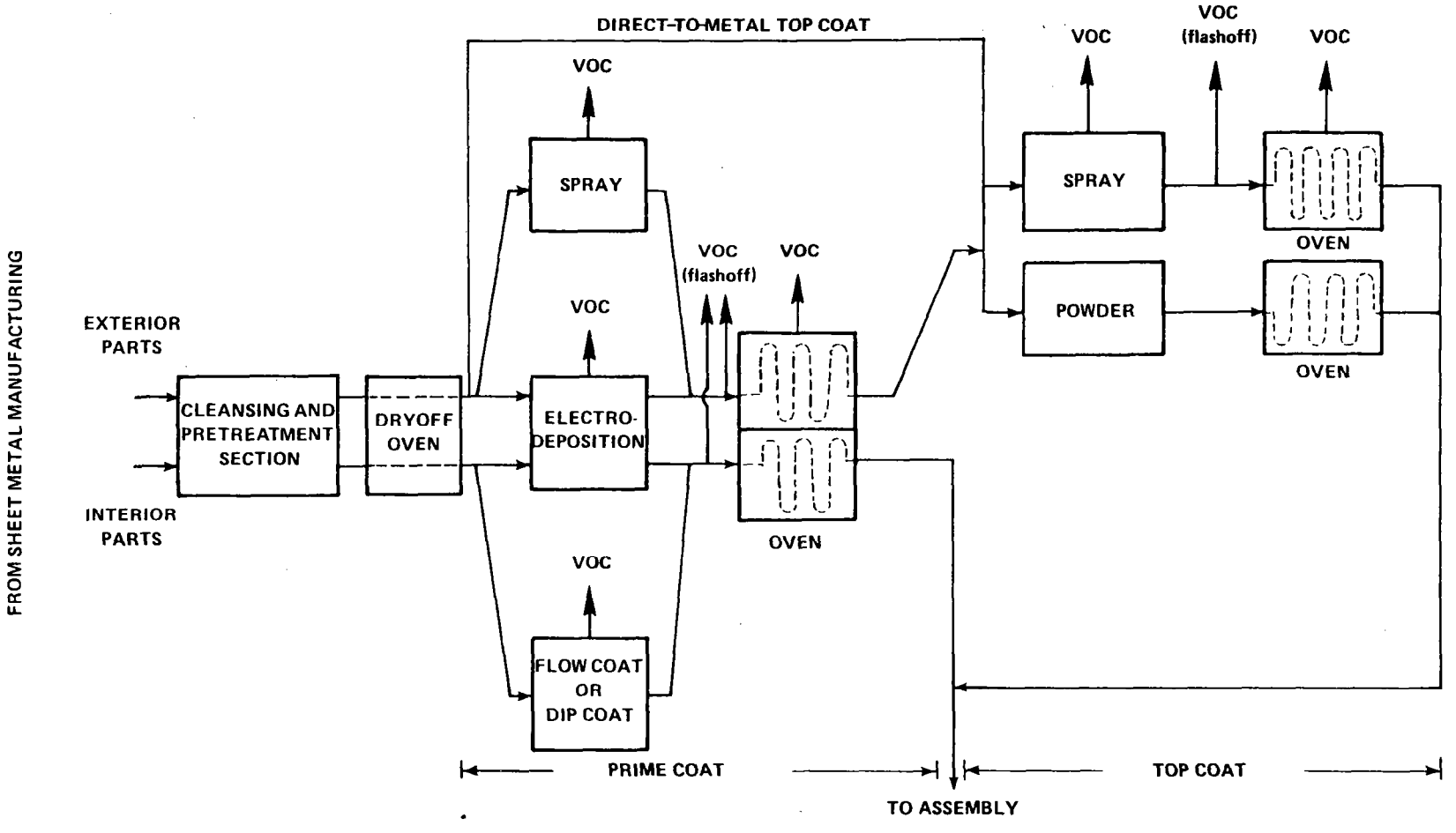

Figure 3-2. Typical applications of coating methods in the large appliance industry.

3.2.1.3 Air and Airless Spray Coating. The three basic types of spray methods are air spray, airless spray, and electrostatic spray. Air spray coating requires compressed air, which may be heated, filtered, or humidified.[4] The air-atomized coating is then directed onto the part to be coated. The transfer efficiency of air spray is about 40 percent.[5]

In airless spray coating, the coating is atomized without air as the liquid material is forced through specially designed nozzles at pressures of 7 to 14 Megapascals (MPa) (1,000 to 2,000 psi). The transfer efficiency for airless spray is about 45 percent.[5] An airless spray gun is shown in Figure 3-3.

3.2.1.4 Electrostatic Spray Coating. There are electrostatic versions of both air and airless spray guns. These spray guns are commonly air ionizing; i.e., the paint particles are not directly charged. A discharge electrode ionizes the air in its immediate vicinity, with paint particles being propelled into this ionized air blanket by the forces causing atomization. The paint particles then become negatively charged. The part to be sprayed is positively grounded, and the oppositely charged paint particles are electrically attracted to it. Although not as common, some electrostatic systems use positively charged paint particles and negatively charged parts. The particle velocity, in the direction of the object, is controlled by the applied voltage of the system. This coating method results in a coating evenly deposited on all sides of the object because of the action of paint particles in the electrostatic field. Spray gun-to-part distances average about 30 cm (12 in.). Electrostatic airless spray coating is approximately 55 percent efficient, while electrostatic air spray is about 60 percent efficient.[5 6 7]

3.2.1.5 Electrostatic Bell and Disk Coating. Other electrostatic methods of applying coatings are bells (Figure 3-4) and disks (Figure 3-5). In these methods, atomization is caused to a small extent by the centrifugal forces associated with rapid spinning of the bell or disk and to a greater extent by the high voltage applied to repel the particles from the

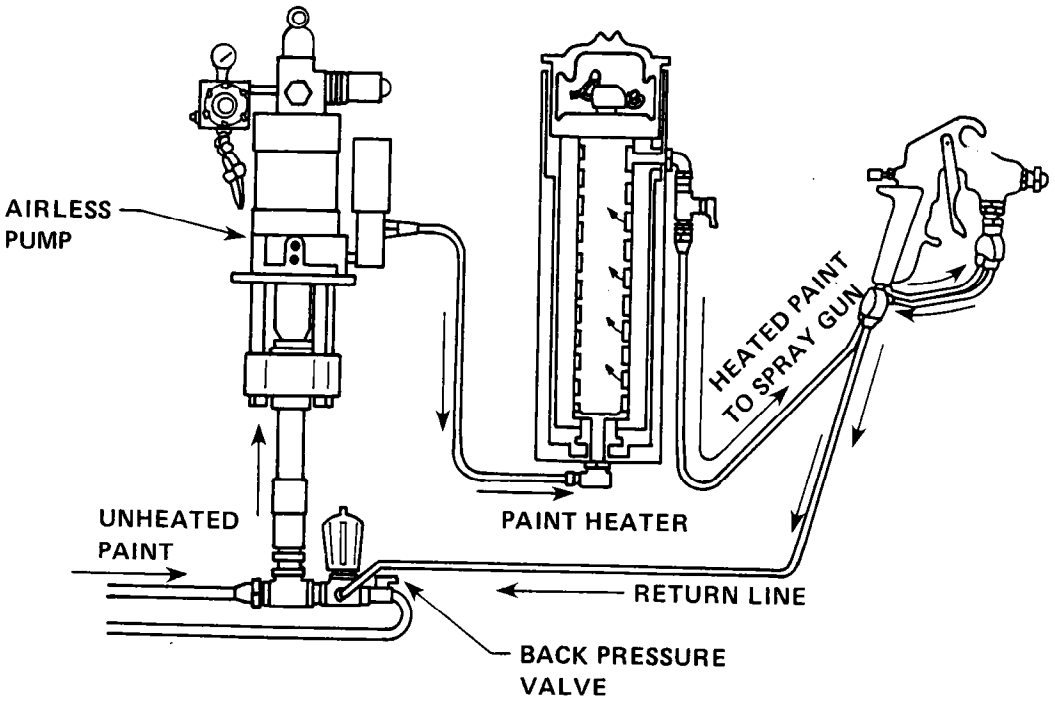

Figure 3-3. Diagram of an airless spray gun with an attached paint heater.

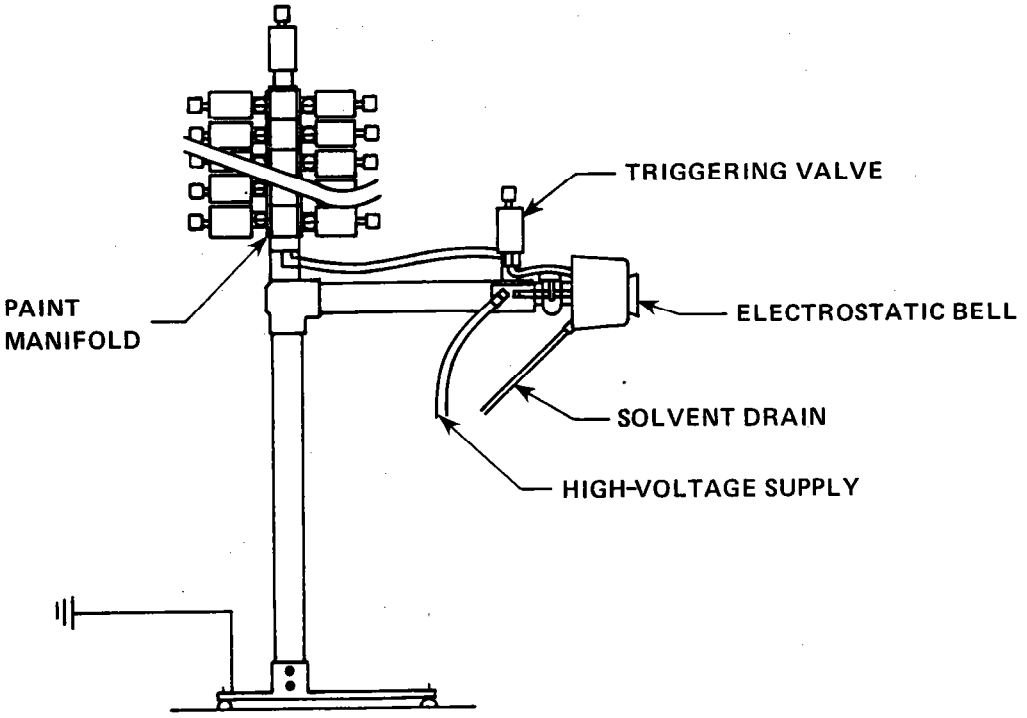

Figure 3-4. Diagram of stationary bell.

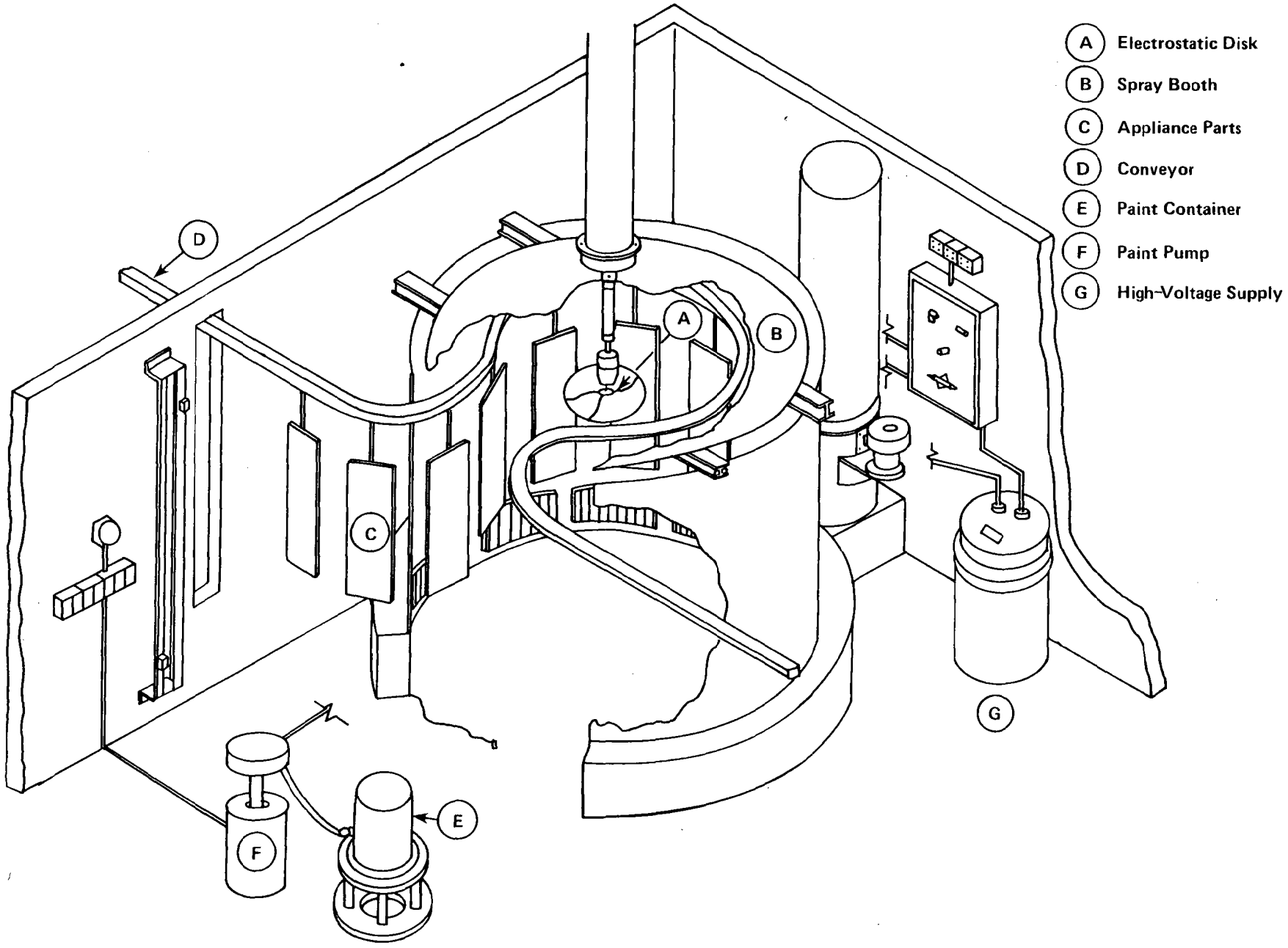

Figure 3-5. Diagram of a reciprocating disk and spray booth.

then attracted to the positively grounded parts, as controlled by the applied voltage and the centrifugal force of the system. A typical transfer efficiency for these systems is about 90 percent.

3.2.1.6 Electrostatic Dip Coating. Electrodeposition (EDP) of paint (Figure 3-6) is known by many names, including electrophoretic coating, E-coating, and electrostatic dip coating. During this process, a DC voltage is applied between carbon or stainless steel electrodes located in a bath of coating and the part to be coated. The part, which can act as the cathode or the anode, is dipped into the bath. Coating particles are attracted from the bath to the part because they are charged oppositely, yielding an extremely even coating. The process is a prime coat or single topcoat method.[5]

Coatings in the dip tank for EDP usually consist of about 90 percent water, 4 percent organic solvents, and 6 percent paint solids;[3] these percentages may vary with the specific application of the coating. The conductivity of the aqueous solution in the bath is extremely sensitive to impurities. For this reason, parts are usually thoroughly rinsed in deionized water before immersion in the dip tank. Most systems are recycling systems in which the water is recovered from the dip tank by ultrafiltration. The deionized water is used to rinse parts, is deionized again, and is then remixed with virgin paint solids and organic solvent and pumped back into the dip tank. This process helps to agitate and properly mix the coating in the tank, preventing paint solids from settling to the bottom.

Electrostatic dip coating produces an even coat with good edge coverage and coating penetration in inaccessible areas.[5] The composition of the coating as it leaves the system is about 75 percent solids, plus water and some organic solvent. Transfer efficiencies are commonly above 95 percent.[4] The thickness of the applied coating depends on the current density and the length of time the part remains in the tank.

3.2.2 Types of Coatings

3.2.2.1 Waterborne Coating. There are three classes of waterborne coatings: water solutions, water emulsions, and water dispersions.[3] Commonly, waterborne coatings for spray, dip, and flow coating are 56

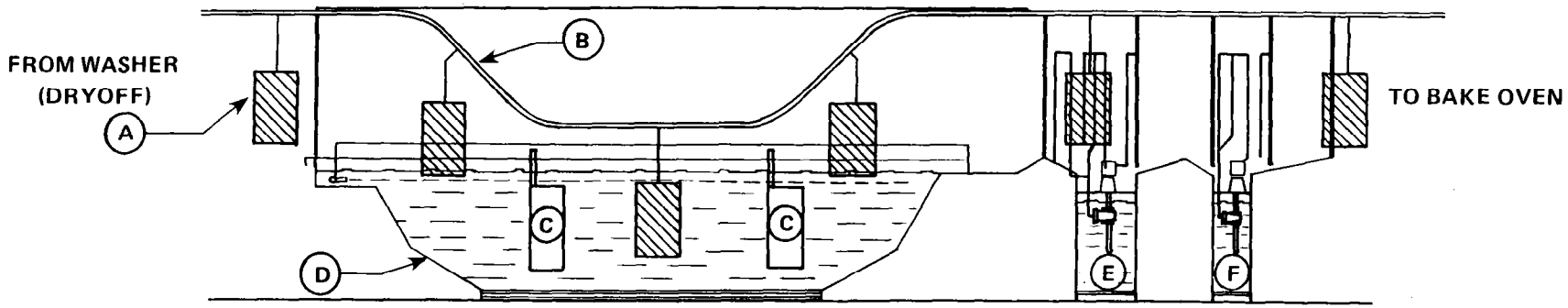

(A) Appliance Parts Anode—Grounded

(B) Conveyor

(C) Cathode—Negative Charge

(D) Dip Coating Tank

(E) First Rinse—D. I. Water

(F) Second Rinse—D. I. Water

(G) Ultrafiltration Unit and Chiller, not shown

Figure 3-6. Diagram of an electrostatic dip coating system.

percent water, 14 percent organic solvent, and 30 percent paint solids. For electrocoating, about 90 percent water, 4 percent organic cosolvents, and 6 percent paint solids solutions are used.[5] The organic solvents used in waterborne coatings act as stabilizing, dispersing, and emulsifying agents. Evaporation of these solvents are the only VOC emissions from waterborne coatings.[3]

Waterborne coatings can be applied by dip coating, flow coating, spray coating, and EDP. Waterborne coatings can be sprayed electrostatically, but this means of application is not common in the large appliance industry. Because the coating is electrically conductive, the necessary electrical potential cannot be developed without isolating the entire coating system, including the paint handling and storage apparatus, from ground. While this is not a problem for one-color systems where the storage tank is in close proximity to the application device, for the multicolor, central batch systems commonly used in the large appliance industry, electrostatic installations are not economically attractive.

Waterborne coatings offer some advantages. Waterborne systems generally do not exhibit as great an increase in viscosity with increasing molecular weight of the solids as do organic-solvent systems.[5] In addition, they are nonflammable and have limited toxicity because of the small amount of organic solvent present in the coatings.

Waterborne coatings have some disadvantages, such as increased rust and corrosion potential compared to organic-solvent-borne coatings. Waterborne coatings do not exhibit the self-cleaning (degreasing) ability that some organic-solvent-borne coatings exhibit on parts, which may lead to greater expenditure of time and money in the precleaning process.

More energy is required to cure waterborne coatings than those based on organic solvents. Water has a heat of vaporization of about 2,300 kJ/kg (1,000 Btu/lb), while most organic solvents used for coating large appliances have heat of vaporization of about 450 kJ/kg (200 Btu/lb). Thus, it takes approximately five times as much energy to vaporize a gram of water as to vaporize a gram of organic solvent.

times required. However, fewer VOCs are emitted from waterborne coatings because of the smaller amount of organic solvents in the coating. Therefore, exhaust flow rates in the oven can be reduced with VOC concentrations consistently maintained below 25 percent of the lower explosive limit (LEL). The reduced flow rate means that a smaller volume of air is heated in the ovens, compared to organic-solvent-borne coatings, to cure the same amount of coated parts. Thus, an energy savings results.[8]

Problems with the aesthetic appearance of the final finish of waterborne coatings may be caused by the relatively slow evaporation rate of water that results from its high boiling point. The organic solvents used in appliance surface coating are multicomponent in nature and have a variety of boiling points, yielding a range of relatively rapid evaporation rates. When organic-solvent-borne coatings are sprayed, one portion of the solvent evaporates between the gun and the part, with more of the solvent evaporating quickly after contact with the part.[5] The result is an applied coating with a viscosity designed to avoid dripping and running. The remaining, higher boiling solvents evaporate more slowly, facilitating an even coating without bubbles. Water evaporates more slowly, depending upon the relative humidity. A bumpy "orange peel" surface may result from the slow evaporation of water. The addition of small amounts of organic solvents to waterborne coatings creates a wider range of evaporation rates, greatly enhancing final coating appearance.[2]

3.2.2.2 Conventional Organic-Solvent-Borne Coatings. Conventional organic-solvent-borne coatings (~30 percent solids) can be applied by the air, airless, and electrostatic methods described for waterborne coatings. In fact, these coatings are more readily sprayed electrostatically than waterborne coatings, because of the inherent corrosion potential and insulation problems associated with the high conductivity of water systems. Electrostatic application equipment includes guns, disks, and bells. Transfer efficiencies are increased over air and airless spray guns, to over 60 percent.[6] The accumulation of coating reduces the potential, making it more difficult to attract the coating to the part. Coating thickness can be controlled by the potential developed between the application device and the part.

Uncontrolled emissions from electrostatic spraying of conventional organic-solvent-borne coatings would be fewer than those from air and airless spray coating but would still be more than those from waterborne or powder methods because of the high concentrations of organic solvent. Flammability of these emissions is much higher than for other systems.

3.2.2.3 Powder Coatings. Powder coatings are most commonly applied by electrostatic spray and fluidized bed methods. The fluidized bed method uses particles with sizes ranging up to about 200 μm in diameter. Particles of this size are impractical to use in the large appliance industry where coatings of 2 to 3 mils (1 mil = 25 μm) thickness are desired;[8] therefore, the fluidized bed method is used infrequently.

In electrostatic spray coating with powders (Figure 3-7), an electrostatic potential is used to hold the powder particles to the object until heat can be applied to form a continuous coating. The appliance part is electrically grounded, and the powder is passed through a blanket of ionized air to charge the particles, causing them to be attracted to the part. Buildup of the nonconductive powder on the part reduces the electrical attraction, so there is a maximum thickness of powder that can be applied, but this maximum thickness exceeds that needed for large appliances. The object need not be hot during application.[8] Powder coatings contain no organic solvent, so VOC emissions from their operations are negligible, and potential toxicity and flammability problems are reduced.

Transfer efficiency for powder systems is usually expressed as a material use and can approach 99 percent in a well-designed spray booth, with an adequate recovery system. Most booths are designed with a conveyor belt that moves across the bottom, collecting the powder that does not adhere to the appliance part during the first application. A dual vacuum system removes the powder from the belt and recycles it to the holding tank.

Baking temperatures are comparable to those for waterborne coatings. Temperatures of 140° to 195° C (285° to 385° F) are needed for about 20 minutes to achieve complete curing; the exact temperature depends on the coating design.[9]

Powder coatings require resins that are solid at room temperature and have a sharp melting point to a much lower viscosity to promote merging of

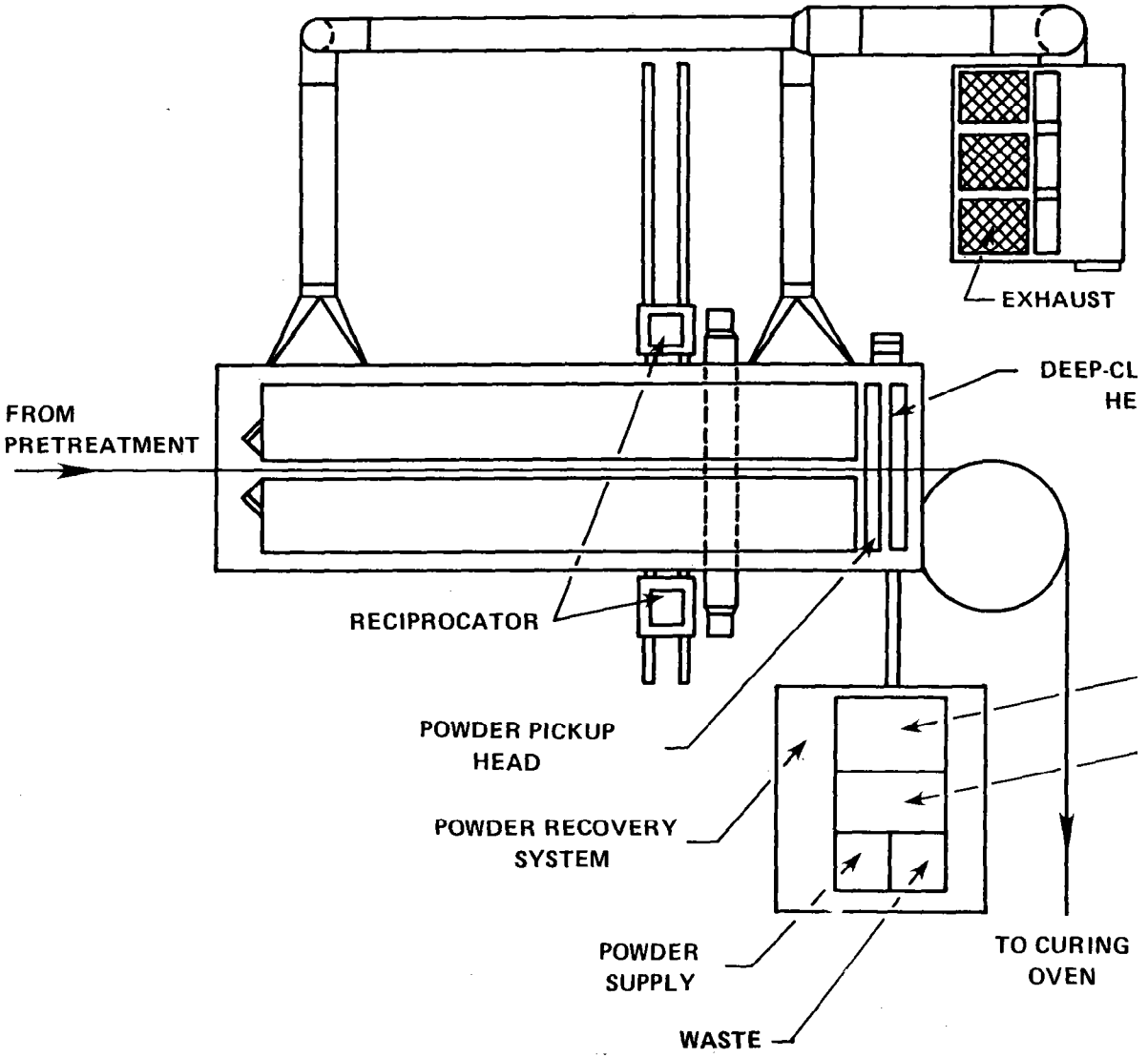

Figure 3-7. Plan view of a powder coating line.

the particles and achievement of a smooth, high-gloss finish. Quality control ensures a narrow range in melt temperature and melt viscosity,[8] allowing oven temperatures to remain constant.

Controlling coating thickness has been a problem in powder coating large appliances. To date, typical particles for sprayed powder coatings are about 28 to 32 μm in diameter. Making uniform application of the particles is essential to achieve a consistent thin film. More consistent application methodologies now make it possible to control coating thickness to 1.3 mil ± 0.5 mil.[8 9]

Although there are no organic-solvent VOC emissions from powder coatings, the coatings undergo post-application changes that emit some VOCs. Data on the potential toxicity of these emissions are limited. One source indicates that these emissions are primarily carbon dioxide and water, as well as E-caprolactam.[9] Another source with more extensive test data indicates that post-application emissions may include methyl isobutyl ketone, tetrahydrophthalic anhydride, benzoin, and some low-molecular-weight polymers.[10]

Any organic powder suspended in air has an explosion potential. A heat or spark source is needed to cause ignition. Ventilation rates in powder spray booths are maintained high enough to keep the powder concentration safely below its LEL. The LEL used by insurance companies, if no experimental data are available on the particular powder, is 0.026 g/m^3 (0.030 oz/ft^3).[8]

3.2.2.4 High-Solids Coatings. The method of VOC reduction expected to be adopted by many existing plants to meet reasonably available control technology (RACT) guidelines and by many new sources is the spraying of high-solids coatings, as opposed to the conventional organic-solvent-borne coatings presently used. The term "high-solids coatings" is usually reserved for coatings with a low-solvent content that are conventionally applied and cured.

The Control Techniques Guideline (CTG) describes high-solids coatings as 0.34 kg (2.8 lb/gal) of organic solvent per liter of coating (minus water), or approximately 62 percent (vol.) solids.[2] This amount is roughly equivalent to 70 percent (wt.) solids, depending upon the densities of the solids and the solvent.

Single-component, heat-cured, high-solids coatings are typically epoxies, acrylics, polyesters, and alkyds. Two-component, ambient-temperature cure, high-solids coatings include urethanes, acrylic-urethanes, and epoxy/amines.[2] Only two-component systems with an extended pot life (after mixing) can be applied with equipment presently used in the large appliance industry. Use of these coatings is limited because of their expense, limited application, and potential toxicity.

Electrostatic spray equipment currently used by appliance manufacturers can accommodate solids concentrations of 45 to 55 percent (vol.) without the use of add-on paint heaters to reduce the viscosity.[4] For much of the present spray equipment, paint heaters may be required to apply 62 percent (vol.) solids coatings.

3.3 BASELINE EMISSIONS

The baseline emission level is the level of emission control required of the appliance surface coating industry in the absence of a New Source Performance Standard (NSPS). In many States little or no control is required on sources emitting less than 100 tons of VOCs annually.

The level of control that would probably exist in the absence of an NSPS is based on the CTG for large appliance surface coating, which was issued in December 1977. Because the CTG does not differentiate between prime coat and topcoat operations, the recommended level of control applies to both. Therefore, the CTG-recommended limit (0.34 kg of organic solvent per liter of coating, minus water [62 percent solids by volume]) constitutes the baseline control level for both operations. Because the CTG-recommended limit does not specify a transfer efficiency, a transfer efficiency had to be assumed to complete a meaningful analysis. The estimated average industry transfer efficiency of 60 percent was used for this purpose.

State air pollution control agencies are currently revising their State Implementation Plans (SIPs), and it appears that most of the revised SIPs will incorporate the CTG-recommended limit. Therefore, the CTG-recommended limit plus an assumed 60-percent industry average transfer efficiency form the basis for estimating the baseline level of control as discussed in Chapter 6.

3.4 REFERENCES

1. Statistical Policy Division, Office of Management and Budget. Standard Industrial Classification Manual. U.S. Government Printing Office. Washington, DC. 1972.

2. Emissions Standards and Engineering Division, U.S. Environmental Protection Agency. Control of Volatile Organic Emissions From Existing Stationary Sources--Volume V: Surface Coating of Large Appliances. Research Triangle Park, NC. EPA-450/2-77-034. December 1977.

3. Emissions Standards and Engineering Division, U.S. Environmental Protection Agency. Control of Volatile Organic Emissions From Existing Stationary Sources--Volume I: Control Methods for Surface-Coating Operations. Research Triangle Park, NC. EPA-450/2-76-028. November 1976.

4. Memo from Daum, K. A., Research Triangle Institute, to Docket. April 12, 1979. Meeting with DeVilbiss Company, Toledo, OH.

5. Air Pollution Engineering Manual, Second edition, Danielson, John A. (ed.). U.S. Environmental Protection Agency. Research Triangle Park, NC. Publication Number AP-40. May 1973.

6. Letter from Acker, Robert M., Ransburg Electrostatic Equipment Corporation, to McCrodden, Brian J., Research Triangle Institute. December 4, 1979. New Source Performance Standards.

7. Baum, Bernard, et al. Second Interim Report on Air Pollution Control Engineering and Cost Study of the General Surface Coating Industry. Springborn Laboratories, Inc. (Prepared for Emission Standards and Engineering Division, U.S. Environmental Protection Agency. Research Triangle Park, NC.) EPA Contract Number 68-02-2075. August 23, 1977.

8. Increasing Commitment to Powder Coating through Education. (Powder Coating 5 Conference Industry Papers. Cincinnati, OH. November 7, 1978.)

9. Letter from Ramig, Alexander, Jr., Glidden Coatings and Resins Company, to McCrodden, Brian J., Research Triangle Institute. November 27, 1979. Background Information Document for Large Appliance Surface Coating Operations.

10. Cole, Gordon E. Powder Coating--State of the Art. GCA Chemical Corporation. Stamford, CT. 1979.

4. EMISSION CONTROL TECHNIQUES

4.1 GENERAL

Emissions from the surface coating of large appliances consist primarily of volatile organic compounds (VOCs) from evaporation of the organic solvents in the coatings. These organic solvents include ketones, alcohols, esters, saturated and unsaturated hydrocarbons, and ethers. About 80 percent of evaporation occurs in the spray booth and flashoff area.[1] Other post-application emissions include some of the lower molecular weight polymers used in the coatings and the evaporation of solvents used during thinning, storage, color change, and cleanup operations. Particulate emissions do not pose a problem; most are trapped in the water wash spray booths commonly used in the industry.[2]

VOC emissions can occur in a number of places along the production line: during atomization and transfer of the coating, during initial air drying of the part after it leaves the spray booth (flashoff), and in the curing oven. Emissions other than organic-solvent VOCs may be present in the oven. Outgasing of polymeric binders, for instance, can occur at the elevated temperatures found in the oven. Fugitive emissions only occur when coatings are mixed and loaded into the application device, during transport of coated parts from the spray booth to the oven (flashoff), and during post-curing. Emissions in the spray booth and oven pass through a stack and thus are not considered fugitive.

Visible emissions--those that attenuate light in the visible wavelengths--occur when large appliances are coated. Coating a part usually generates a significant amount of overspray, which includes paint solids and the VOCs from the solvent. If not trapped by the spray booth, visible emissions from atomized paint solids may be released to the atmosphere.

In the large appliance surface coating industry, several techniques are used to reduce VOCs from coatings application. The presently used

techniques employ modified or new coating technologies. Because these coatings contain lower percentages of organic solvent, they have the potential for fewer VOC emissions. Most large appliances are finished in a two-coat process--a prime coat covered by a top coat. Industry trends favor the use of high-solids or electrodeposition (EDP) coatings for prime coats. EDP is widely used in the laundry sector because of its favorable environmental qualities and excellent part-covering and corrosion resistance characteristics. Top coats will probably be high-solids coatings or powder coatings, although some waterborne coatings may be used.

Organic-solvent-borne coatings currently used in the large appliance industry contain about 0.63 kg organic solvent per liter of coating (~30 percent solids*). The Control Techniques Guidelines (CTGs) recommend the use of coatings containing 0.34 kg (or less) of organic solvent per liter of coating (minus water) (~62 percent solids) in all areas where those guidelines are applicable. High-solids (62-percent solids) coatings contain about 70 percent less solvent than conventional coatings. The concentration of organic solvent in waterborne coatings varies with the application method, but all have VOC emissions less than the 0.34-kg-per-liter value of high-solids coatings. Powder coatings contain no organic solvent.

Transfer efficiency is a major parameter that governs the effective reduction of VOC emissions by low-organic-solvent coatings. Chapter 3 defines transfer efficiency as the ratio of the amount of paint solids transferred to a surface to the total amount of coating solids used. Improved transfer efficiency decreases the volume of coating that must be sprayed to cover a specific part, thereby decreasing the total VOC emission rate. Even with high-solids coatings, a low transfer efficiency could result in high VOC emissions.

Other parameters influencing the effectiveness of emission reduction through transfer efficiency could be categorized as "fine tuning" of the application equipment. Cleanliness, maintenance of proper electrical potential, and adjustment of equipment to maintain proper atomization and application velocity promote high transfer efficiency and, therefore, reduced emissions.

---

*All percentages are by volume unless otherwise stated.

Transfer of emission reduction technology from other coatings industries has had little impact on the large appliance industry. Coatings used in the large appliance industry are unique in that they require high detergent resistance, high pencil hardness (resistance to scratching with a sharp instrument), and good aesthetic appearance. These standards limit the technology transfer from other coatings industries, which do not always require these qualities in a coating. In general, the coating industries are switching to low-organic-solvent coatings both to achieve VOC reduction for environmental standards and to reduce the use of organic solvents, which are steadily increasing in cost.

4.2 PRIME COAT APPLICATION

Appliance quality prime coats can be applied by spray and EDP methods. Spraying of waterborne and organic-solvent-borne coatings is described in Chapter 3. Briefly, conventional organic-solvent-borne coatings, high-solids coatings, and water-based coatings can be applied by spray methods. Spraying of high-solids prime coats can result in a 70-percent reduction of VOC emissions over the use of conventional organic-solvent-borne prime coats. Spraying of water-based coatings can result in a 92-percent reduction in VOC emissions over the use of conventional organic-solvent-borne prime coats.

EDP coating, the best method for application of prime coats in some instances, is fully described in Chapter 3. During this process a direct current is applied between carbon or steel electrodes located in a bath of the coating and the part to be coated. The part, which can act as the cathode or the anode, is dipped into the bath. Coating particles are attracted from the solution to the part because they are charged oppositely, yielding an even coating. This coating makes a good prime coat because it is evenly applied to the entire part. Coatings in the dip tank for EDP usually consist of about 90 percent water, 4 percent organic solvents, and 6 percent paint solids. The use of EDP for prime coats will result in a 94-percent reduction in VOC emissions over the use of conventional coating for prime coats (see Table 4-1). However, the overall effectiveness of EDP as a means of control is mitigated because the method may result in the deposition of a greater volume of solids than is necessary when a prime

TABLE 4-1. COMMON METHODS OF REDUCTION OF VOCs IN THE LARGE APPLIANCE SURFACE COATING INDUSTRY

Control method	Means of reduction	% reduction over uncontrolled conventional coatings
High-solids coatings (0.340 kg VOC/ℓ)	Lower organic-solvent content	70[a]
Powder coatings	No use of organic solvent	99[a]
EDP (0.040 kg VOC/ℓ)	Lower organic-solvent content	94[a]
Water-based coatings (0.140 kg VOC/ℓ)	Lower organic-solvent content	47[a]
Carbon adsorption[b,c,d]	Adsorption of hydrocarbon emissions on a carbon bed	Topcoat spray booth--33 Topcoat oven--15
Incineration[b,c]	Catalytic or thermal oxidation of hydrocarbon emissions	Topcoat spray booth--33 Topcoat oven--15

[a]Calculated by determining the difference in the organic-solvent content of the coating and a conventional coating containing 0.61 kg VOC/ℓ (30 percent solids).

[b]81 percent overall control efficiency.

[c]Based on 40 percent of emissions occurring in the spray booth, 40 percent in the flashoff, and 20 percent in the curing oven.

[d]In addition to control of VOCs, solvents may be recovered through carbon adsorption.

coat is not actually required on all surfaces (e.g., the interior surface of a refrigerator case).

4.3 TOPCOAT APPLICATION

4.3.1 Waterborne Coatings

Waterborne coatings for spray, dip, and flow coating are approximately 56 percent water, 14 percent organic solvent, and 30 percent paint solids. The organic cosolvents used in waterborne coatings act as stabilizing, dispersing, and emulsifying agents. Evaporation of these solvents creates the only VOC emissions from waterborne coatings. Waterborne coatings of this formulation yield a 47-percent reduction in emissions over conventional coatings (see Table 4-1).

Extensive use of waterborne top coats is not anticipated in the large appliance surface coating industry. Although a wide variety of coatings are available in waterborne systems, many of these coatings do not meet large appliance performance specifications. Use of waterborne coatings also increases the corrosion potential to the application device. As discussed in Chapter 3, the nature of appliance coating operations makes the electrostatic application of waterborne coatings more difficult, and less attractive economically, than in other industries.

4.3.2 High-Solids Coatings

The CTG describes low-organic-solvent coatings as those containing 0.34 kg of organic solvent (or less) per liter of coating (minus water), or 62 percent solids. The term "high-solids coatings" is usually reserved for low-organic-solvent coatings that are conventionally applied and cured. Use of high-solids coatings for top coats will result in a 70-percent reduction in emissions over top coating with conventional coatings (see Table 4-1).

High-solids coatings are a likely method for applying top coats at new plants in the large appliance industry. These coatings are applied by methods already used in the industry: air and airless spray, electrostatic spray, bells and disks, and high-speed bells and disks. The higher viscosity of these coatings may be reduced by the use of paint heaters to apply the coatings with existing equipment.

4.3.3 Powder Coatings

Powder coatings are fully described in Chapter 3. Basically, they can be top coats or single coats and are applied in the ~~large~~ appliance industry by electrostatic spraying. An electrostatic potential is used to hold the powder particles on the object until heat can be applied to form a continuous coating. Powder coatings contain no organic solvent, so no VOC emissions result from their application. Powder coating application is equivalent to a 99-percent reduction in VOC emissions over use of conventional coatings as top coats (see Table 4-1). Powder coatings undergo post-application changes that do emit some VOCs. These emissions are caused by crosslinking and polymerization. Data are limited on the nature of these emissions, but some sources indicate they are primarily combustion products (i.e., carbon dioxide and water) as well as E-caprolactam.[3] Another source with more extensive test data on these post-application emissions indicates they may include methyl isobutyl ketone, tetrahydrophthalic anhydride, benzoin, and some low-molecular-weight polymers.[4]

Powder coatings have many applications in the large appliance industry, but they have not been adequately demonstrated for all appliances under all conditions. Because the technology is new, their use is not yet widespread.

4.4 CAPTURE SYSTEMS AND CONTROL DEVICES

Process designs in other coating industries allow emissions to be captured easily by the control devices, which are usually carbon adsorption units or incinerators. The commonly used process design in surface coating of large appliances is spread out, making reasonable capture efficiences for add-on control devices cost prohibitive. Control devices could, however, be installed on the spray booth or on the curing oven.

4.4.1 Carbon Adsorption

Carbon adsorption as a technique for organic-solvent recovery has been used commercially for several decades. Applications include solvent recovery from dry cleaning, metal degreasing, printing operations, and rayon manufacture[5]--as well as from industrial finishing.[6]

In the large appliance surface coating industry, the emissions of greatest concern come from dip tanks, spray booths, and their respective curing ovens. Adsorption systems for spray booth emissions must be designed to handle air with a high water vapor content. This high humidity results

from the use of water curtains on both sides of the spray booths to capture overspray.[2] Although carbon preferentially adsorbs organics, water will compete for available sites on the carbon surface. Generally, the relative humidity should be kept below 80 percent to minimize this problem.[7] Particulates from oversprayed coating must be removed from the air stream because this material coats the carbon and/or plugs the interstices between carbon particles. Such plugging reduces adsorption efficiency and increases pressure drop through the bed.

The exhaust from the spray booths, particularly during periods of cool ambient temperatures, can be saturated with moisture. One solution to this problem would be to preheat the moisture-laden air to lower the relative humidity to below 80 percent; 5° C (9° F) heating would be sufficient.[8]

In the cure oven, high temperatures and flame contact can cause polymerization of the volatiles into high-molecular-weight resinous materials that can deposit on and foul the carbon bed. Various high-molecular-weight volatiles in the coatings, such as oligomers, curing agents, or plasticizers, can cause similar problems. For removal of these materials, filtration and/or condensation of the oven exhaust air would be necessary prior to adsorption.

For satisfactory performance, it would also be necessary to cool the oven exhaust to a temperature no greater than 38° C. Without cooling, many of the more volatile organics will not adsorb but will pass through the adsorber.[9]

Assuming 90 percent capture efficiency, 90 percent adsorption of captured emissions, 40 percent of emissions in the spray booth, 40 percent of emissions as flashoff, and 20 percent of emissions in the curing oven, carbon adsorption will yield a 33-percent reduction in emissions, if used on the spray booth, and a 15-percent reduction in emissions, if used on the curing ovens. At this time, carbon adsorption is probably not a practical control option for the large appliance surface coating industry primarily because of the auxiliary equipment that would be required to pretreat the feed gas streams.

4.4.2 Incineration

4.4.2.1 Introduction. Incineration is the most universally applicable technique for reducing the emission of volatile organics from industrial processes. In the industrial finishing industry, these volatile

organic emissions consist mostly of organic solvents comprised of carbon, hydrogen, and oxygen. Such solvents can be burned or oxidized in specially constructed incinerators into carbon dioxide and water vapor.

Industrial incinerators or afterburners are either noncatalytic (commonly called thermal or direct fired) or catalytic. Sufficient differences divide these control methods to warrant a separate discussion of each.

4.4.2.2 Thermal Incinerators. Direct-fired units operate by heating the organic-solvent-laden air to temperatures approaching combustion and bringing the air into direct contact with a flame. High temperature and high organic concentration favor combustion; a temperature of 760° C (1,400° F) is generally sufficient for nearly complete combustion.

For the prevention of fire hazards, industrial finishing ovens seldom used to be operated with concentrations of solvent vapor in the air greater than 25 percent of the lower explosive limit (LEL). In recent years, however, concentrations of up to 50 percent of the LEL have been permitted with use of automatic monitors and shutdown devices.[10] Nonetheless, the concentrations of organic vapors in the exhausts both from ovens and spray booths are so low that auxiliary heating would be required to burn the vapors. Natural gas combustion usually provides the heat and direct flame contact in thermal incinerators, but propane and fuel oil are also used.[11]

The quantity of heat to be supplied depends on the concentration of organics in the air stream; the higher the concentration the lower the auxiliary heat requirement because of the fuel value of the organics. For most organic solvents, the fuel value is equivalent to 18.5 kJ/m^3 (0.5 Btu/scf), which translates into a temperature rise of approximately 15° C (27° F) for every percentage point of LEL that is incinerated. For an air stream with a solvent content of 25 percent of LEL, the contribution from the heat of combustion of the solvent would be approximately 480 kJ/m^3 (13 Btu/scf), equivalent to a temperature rise of 345° C (620° F).

Heat transfer devices are often used to recover some of the combustion heat to reduce the cost of thermal incineration. Primary heat recovery is often in the form of a recuperative heat exchanger--either tube- or plate-type--which is used to preheat the incoming process vapors. Units of this type are capable of recovering 50 to 70 percent of the total heating value of solvent and fuel.[12]

A more efficient type of heat recovery system and one widely used in vapor incineration equipment is the regenerative heat exchanger, both refractory and rotary-plate types. Units of these types are capable of heat recoveries of 75 to 90 percent.[13] In some cases, secondary recovery is also used to convert additional exhaust heat into process steam or to warm makeup air for the plant.

4.4.2.3 Catalytic Incineration. This add-on control method uses a metal catalyst to promote or speed combustion of volatile organics. Oxidation takes place at the surface of the catalyst to convert organics into carbon dioxide and water. No flame is required. The catalyst--usually a noble metal such as platinum or palladium--is supported in the hot gas stream so a large surface area is presented to the waste organics. A variety of designs are available for the catalyst, but most units use a noble metal electrodeposited on a high-area support, such as ceramic rods or honeycombed alumina pellets.[12]

As with thermal incinerators, the performance of the catalytic unit depends on the temperature of the gas passing across the catalyst and the residence time. In addition, the efficiency of the incinerator varies with the type of organic oxidized. While high temperatures are desirable for good emission reduction, temperatures in excess of 600° C (1,100° F) can cause serious deactivation of the catalyst through recrystallization of the noble metal.

The use of a catalyst permits lower operating temperatures than for direct-fired units. Temperatures normally range from 260° to 320° C (500° to 600° F) for the incoming air stream and 400° to 550° C (750° to 1,000° F) for the exhaust. The exit temperature from the catalyst bed depends on inlet temperature, organic concentration, and completeness of combustion. The increase in temperature results from the heat of combustion of the organics.

As with thermal incinerators, primary and secondary heat recovery can be used to reduce auxiliary fuel requirements for the inlet air stream and to reduce the overall energy needs for the plant. Although catalysts are not consumed during chemical reaction, they tend to deteriorate, causing a gradual loss of effectiveness in oxidizing the organics. This deterioration is caused by:

- Poisoning with chemicals, such as phosphorus and arsenic, which react with the catalyst;
- Coating the catalyst with particulates or condensates; and
- High operating temperatures, which tend to cause the noble metal to recrystallize with less surface area.

In most cases, catalysts are guaranteed for 1 year by the equipment supplier,[14] but with proper cleaning and attention to moderate operating temperatures, the catalyst should have a useful life of 2 to 3 years.[12]

4.4.2.4 General Comments. The two most likely places for incineration to be used are on the topcoat spray booth and on the curing oven. Assuming 90 percent capture efficiency, 90 percent incinerator efficiency, 40 percent of emissions in the spray booth, 40 percent of emissions as flashoff, and 20 percent in the curing oven, incineration will yield a 33-percent reduction in emissions if applied to the spray booth, and a 15-percent reduction in emissions on the curing oven.

4.5 REFERENCES

1. Baum, Bernard, et al. Second Interim Report on Air Pollution Control Engineering and Cost Study of the General Surface Coating Industry. Springborn Laboratories, Inc. (Prepared for Emission Standards and Engineering Division, U.S. Environmental Protection Agency. Research Triangle Park, NC). EPA Contract Number 68-02-2075. August 23, 1977.

2. Telecon. Pleva, M., Ransburg Electrostatic Equipment Corporation, with Mahadeven, V., Research Triangle Institute. December 7, 1979. New Source Performance Standards.

3. Letter from Ramig, Alexander, Jr., Glidden Coatings and Resins Company, to McCrodden, Brian J., Research Triangle Institute. November 27, 1979. Background Information Document for Large Appliance Surface Coating Operations.

4. Cole, Gordon E. Powder Coating--State of the Art. GCA Chemical Corporation. Stamford, Conn. 1979.

5. Mantell, C. L. Adsorption. New York, McGraw-Hill, 1951. p. 237-248.

6. Kanter, C. B., et al. Control of Organic Emissions from Surface Coating Operations. In: Proceedings of the 52nd APCA Annual Meeting. June 1959.

7. Cavanaugh, E. C., G. M. Clancy, and R. G. Wetherold. Evaluation of a Carbon Adsorption/Incineration Control System for Auto Assembly Plants. Radian Corporation. Austin, TX. EPA Contract Number 68-02-1319, Task 46. May 1976. p. 54-58.

8. Handbook of Chemistry and Physics. Weast, R. C. (ed.). Cleveland, The Chemical Rubber Company, 1964. p. E-26.

9. Grandjacques, B. Air Pollution Control and Energy Savings with Carbon Adsorption Systems. Calgon Corporation. Report APC 12-A. July 19, 1975.

10. National Fire Protection Association. Ovens and Furnaces, 1973. NFPA Number 86A. Boston, MA. 1973.

11. Stern, A. C. Air Pollution, Vol. III, Sources of Air Pollution and Their Control. New York, Academic Press, 1968.

12. Lund, H. F. P. Industrial Pollution Control Handbook, New York, McGraw Hill, 1971. p. 7-8 to 7-11.

13. REECO Regenerative Environmental Equipment Company, Inc. Re-Therm Oxidation Equipment. Product bulletin REE-1051-975-15M. Morris Plains, NJ.

14. Kent, R. W. Thermal Versus Catalytic Incineration. Products Finishing. 40(2):83-85. November 1975.

5. MODIFICATIONS AND RECONSTRUCTION

5.1 BACKGROUND

New Source Performance Standards (NSPS) apply to new sources and to existing sources that undergo modification or reconstruction. The proposal date of the standards separates new and existing sources. Existing sources are those that commenced construction or modification prior to the proposal date; new sources are those that began construction subsequent to that date. Upon modification or reconstruction, existing facilities become affected facilities and are therefore subject to the standards. This chapter's purpose is not to define changes to facilities or processes that would be judged modifications or reconstructions but to present and discuss characteristic changes. Determination of modification and reconstruction is made on a case-by-case basis by the appropriate enforcement authority.

The owner or operator of any source classified as an existing facility must notify the U.S. Environmental Protection Agency (EPA) of changes that could increase emissions of an air pollutant for which a standard of performance applies.[1] An increase in emissions from an existing facility is defined as a modification. The Code of Federal Regulations states:

> (a) . . . any physical or operational change to an existing facility which results in an increase in the emission rate to the atmosphere of any pollutant to which the standard applies shall be considered a modification within the meaning of Section 111 of the Act. Upon modification, an existing facility shall become an affected facility for each pollutant to which the standard applies and for which there is an increase in the emission rate to the atmosphere.[2]

A reconstruction is defined in 40 CFR 60.15:

> (a) An existing facility, upon reconstruction, becomes an affected facility, irrespective of any change in emission rate.

(b) "Reconstruction" means the replacement of components of an existing facility to such an extent that:

(1) The fixed capital cost of the new components exceeds 50 percent of the fixed capital cost that would be required to construct a comparable, entirely new facility; and

(2) It is technologically and economically feasible to meet the applicable standards set forth in this part.[3]

The purpose of this provision is to discourage the perpetuation of a facility that, in the absence of a regulation, would normally have been replaced. The owner or operator must provide EPA with advance information concerning the reconstruction of an existing facility.[3]

5.2 MODIFICATIONS

Increased emissions could result from any number of physical or operational changes in existing plants. Several of the more plausible changes are discussed here. The list is not exhaustive but rather is intended to illustrate the types of changes that might reasonably be expected to occur.

5.2.1 Increased Production

Other factors remaining equal, an increase in the number of units coated will result in increased emissions. This change, however, is explicitly covered in the Code of Federal Regulations:

(e) The following shall not by themselves be considered modifications under this part.

(2) An increase in production rate of an existing facility, if that increase can be accomplished without a capital expenditure on the stationary source containing that facility.

(3) An increase in the hours of operation.[2]

A capital expenditure is defined as an expenditure exceeding the product of the annual asset guideline repair allowance percentage specified in the latest edition of Internal Revenue Service Publication 534 and the facility's basis (Section 1012, Internal Revenue Code).[4] For tax year 1979, the repair allowance for the electrical equipment industry (including commercial and domestic appliances) was 5.5 percent of the basis.

Thus, a company that increases production by increasing line speed or expanding operating hours might not have undergone a modification if these changes could be made without a capital expenditure.

5.2.2 Additional Coating Stations

If additional coating stations were added, emissions could increase. If the addition of extra spray booths resulted in the redesignation of that coating operation as an "affected" facility, an additional capital expenditure might be required to upgrade the other coating stations in that facility to comply with the proposed NSPS standards.

5.2.3 Increased Film Thickness

A change to a thicker coating, if other factors remained constant, could increase VOC emissions. However, if this change were made only to improve product reliability, it might not be considered a modification.

5.2.4 Changes in Raw Materials

Changes in coating materials to produce new colors or appearance finishes, increase corrosion resistance, or otherwise improve the quality of the surface coating could be associated with increased organic-solvent emissions. When these coating changes increase emissions, they will be examined by the Administrator on a case-by-case basis to determine whether or not they will be considered a modification of an existing facility. Such changes in coating materials might be considered changes in raw materials, a category of change addressed specifically in the Code of Federal Regulations:

> (e) The following shall not, by themselves, be considered modifications under this part.
>
> (4) Use of an alternative fuel or raw material if . . . the existing facility was designed to accommodate that alternative use. A facility shall be considered to be designed to accommodate an alternative fuel or raw material if that use could be accomplished under the facility's construction specifications as amended prior to the change.[2]

Any of the following changes in materials or coating formulation could increase organic-solvent emissions and would warrant a determination by the Administrator as to whether it constituted a modification.

- Lower solids coatings. If a change is made from a higher to a lower solids coating (e.g., from an enamel to a lacquer), more material--and hence more organic solvent--will be used to maintain the same thickness of applied coating. While unlikely, a change in the direction of lower solids could occur in any one plant as a result of changed paint systems, colors, models, or use of metallic coatings.

- Use of higher density solvent. Regulations normally restrict the mass of organic solvent that can be emitted. An increase in the density of the organic solvents used, even if the volumetric amounts used were the same, would result in more mass of organic solvent emitted. Such substitutions might result from solvent shortages or attempts to cut paint costs.
- Increased thinning of coatings. A change to a higher viscosity coating could increase use of organic solvents for thinning the coating to proper viscosity for application.

5.3 RECONSTRUCTION

The term reconstruction means the replacement of components of an existing facility to such an extent that the fixed capital cost of the new components exceeds 50 percent of the fixed capital cost that would be required to construct a comparable, entirely new facility.[3] The circumstances that might lead to a reconstruction are too numerous to list. In general, however, an extensive replacement of components might be required if existing equipment were worn out, if there were an economic incentive to change coating systems, or as a result of some combination of these two factors.

The following examples illustrate the types of factors that might make it economical to reconstruct an existing coating line.

5.3.1 Increased Solvent Costs

A significant increase in the cost of organic solvent could prompt several coating system changes. A change to a high-solids coating containing less organic solvent might require new application equipment and/or paint heaters. Conversely, new application equipment might be installed to improve the efficiency with which the existing coating is applied.

5.3.2 Changes in Material Costs

Changes in the relative costs of various coating materials could make a different coating system more attractive. For instance, a small increase in the cost of prime coat materials might make powder more economical because conversion to a powder system usually eliminates the need for a prime coat. Likewise, an increase in coating cost might make the installation of new, more efficient application equipment economical.

5.3.3 Change in Product Demand

Increased product demand would lead to increased production. An

increased production rate could make the economies of scale inherent with more expensive equipment attainable.

5.4 REFERENCES

1. U.S. Environmental Protection Agency. Code of Federal Regulations. Title 40, Chapter I. Subchapter A, Section 60.7. Washington, DC. Office of the Federal Register.

2. U.S. Environmental Protection Agency. Code of Federal Regulations. Title 40, Chapter I. Subchapter A, Section 60.14. Washington, DC. Office of the Federal Register.

3. U.S. Environmental Protection Agency. Code of Federal Regulations. Title 40, Chapter I. Subchapter A, Section 60.15. Washington, DC. Office of the Federal Register.

4. U.S. Environmental Protection Agency. Code of Federal Regulations. Title 40, Chapter I. Subchapter A, Section 60.2. Washington, DC. Office of the Federal Register.

6. MODEL PLANTS AND REGULATORY ALTERNATIVES

6.1 GENERAL

Chapter 4 describes and evaluates the performance of individual control technologies that can be used to reduce volatile organic compound (VOC) emissions from surface coating operations in the large appliance industry. This chapter identifies several practical regulatory alternatives based on combinations of those previously described control technologies. The relative effectiveness of these alternatives is assessed by their application to four model plants that were developed to represent plants that will be subject to the proposed standards. The environmental and economic impacts of the several regulatory alternatives are discussed in Chapters 7 and 8.

6.2 MODEL PLANTS

The model plants defined herein are considered representative of new or modified coating operations that might be installed in the 1981-1986 period. The plants attempt to model typical sizes, product mixes, and coating techniques that would be installed in the absence of further air pollution regulations. As such, they represent a "base case" for comparing not only the effectiveness of the regulatory alternatives in controlling air pollution but also the economic, energy, and adverse environmental impacts of these alternatives. The selection of coating materials and methods incorporated in the models is based on a review of published information and discussions with appliance manufacturers, coating equipment vendors, and coating formulators. The model plants provide for application of organic-solvent-borne coatings conforming to the reasonably available control technology (RACT) guidelines for both prime coats and top coats. In each case, curing occurs in a gas-fired oven.

Four model plants of different size and product mix were selected as representative of those likely to be constructed or modified during the 1981-1986 period:

- 13,000 units produced per year: 75 percent ranges and 25 percent microwave ovens (SIC 3631);
- 107,000 units produced per year: 75 percent ranges and 25 percent microwave ovens (SIC 3631);
- 392,000 units produced per year: 78 percent refrigerators and 22 percent freezers (SIC 3632); and
- 657,000 units produced per year: 58 percent washers and 42 percent dryers (SIC 3633).

The plants operate 2,000 hours per year, and all of the products are to be produced in four colors.

Estimating the capacity of each line (units per year) involved several steps. First, 1978 sales data[1] for plants in SIC codes 3631, 3632, and 3633 were arrayed in ascending order of magnitude. These data were then plotted in a cumulative distribution of the percentage of total sales. Because of the capital-intensive nature of large appliance surface coating operations, new installations were anticipated to be large. For this reason, a plant corresponding to the 75th percentile of the sales distribution for each of the three SIC codes was selected to represent a new line that might be constructed in the 1981-1986 period. The 25th percentile of the sales distribution for SIC code 3631 was also selected to ensure that a small line was included for economic impact analysis. A model coating line was not developed for SIC code 3639 (Household Appliances, Not Elsewhere Classified) because of the diversity of products and line configurations in that classification. Sales data, however, indicated that the distribution of plant sizes in SIC code 3639 was similar to the distribution in other large appliance classifications. Therefore, the impacts of the several regulatory alternatives on SIC code 3639 were reasoned to be similar to the impacts predicted for the other three classification codes.

The mix of products for each plant was based on 1977 factory shipments within that SIC category.[2]

Four primary factors determine the VOC emissions from large appliance surface coating operations:

- Area coated,
- Coating thickness,
- Transfer efficiency, and
- Coating composition.

Each of these parameters had to be defined for each model plant. The area coated depends on production (more fully defined by parameters such as capacity, degree of capacity use, and line speed), product mix, and unit areas. Capacity was assumed to be fully used. Unit areas to be coated for each of the appliances are shown in Table 7-1. In addition, three other factors--organic-solvent type, curing time, and curing temperature--require definition. In practice, a variety of organic solvents are used in appliance coatings. However, for convenience, toluene was selected as the solvent to be used for all operations in the model plants. The application of organic-solvent-borne coatings conforming to RACT guidelines (62 percent solids*) was selected for both prime coat and topcoat operations in all the model plants. Because the Control Techniques Guidelines (CTGs)[3] do not specify a transfer efficiency, the model plants use an estimated industry average transfer efficiency of 60 percent.

Application of a waterborne prime coat by electrodeposition (EDP) is gaining wide acceptance in some sectors of the industry because of its superior corrosion resistance and may be used to comply with State Implementation Plans (SIPs) conforming to the CTGs. EDP is also the most effective control technology for prime coating. Water-based flow coats may also be used to comply with revised SIPs. For the segment of the large appliance industry that adopts these technologies in the absence of regulatory pressure, a New Source Performance Standard (NSPS) will have no impact on VOC emissions. To the extent that EDP is adopted, subsequent calculations may overestimate the emissions attributable to the NSPS. Nonetheless, inclusion of either of these techniques in the model plants might have underestimated the economic impact of the prime coat regulatory alternatives described below. Underestimation of the economic impact was considered a more significant error than overestimation of emission reduction.

Through similar reasoning, a 62-percent (vol.) solids top coat applied at a 60-percent transfer efficiency was selected for all the model plants, although powder coatings represent the most effective control technology

*All percentages are by volume unless otherwise stated.

for topcoating operations and may be used to achieve compliance. Because powder coating technology is not universally applicable or accepted, it is not represented in the model plants. To the extent that powder coating is adopted, subsequent calculations may overestimate the emissions reductions attributable to the NSPS.

A parametric description of each of the four model coating lines is shown in Table 6-1 and Table 6-2.

6.3 REGULATORY ALTERNATIVES

This section discusses the several regulatory alternatives that were developed following the study of control techniques available. Because prime coating and top coating are independent sources of VOC emissions, separate regulatory alternatives were required for each operation. These alternatives are enumerated following a discussion of the baseline control level.

6.3.1 Baseline Controls

Not promulgating an NSPS is one regulatory alternative that exists for both surface coating operations. The level of control that would probably exist in the absence of an NSPS is based on CTG recommendations. Because the CTG does not differentiate between prime coat and topcoat operations, the recommended level of control applies to both. Therefore, the CTG-recommended limit (0.34 kg of organic solvent per liter of coating, minus water [~62 percent solids by volume]) constitutes the baseline control level for both operations. Because the CTG-recommended limit does not specify a transfer efficiency, a transfer efficiency had to be assumed to complete a meaningful analysis. The estimated average industry transfer efficiency of 60 percent was used for this purpose.

As discussed in Section 6.2, some segments of the industry will probably employ control techniques that yield emission levels considerably below those recommended by the CTG, even in the absence of further regulations. Regulatory impact analyses, however, traditionally use the existing emission limit as the baseline control level. One advantage of this approach is that a worst case economic impact is assured. That is, the economic impact is overestimated if a portion of the industry would have voluntarily adopted more stringent controls than those assumed. On the other hand, the

TABLE 6-1. MODEL LARGE APPLIANCE SURFACE COATING PLANTS

							Application						Cure				VOC emissions (kg/yr)		
Model plant	Coating	Method	Capacity (units/yr)	No. of lines	Line speed (m/s)	Area coated (m^2/yr)	Coating thickness (μm)	Transfer efficiency (%)	Solids (% vol.)	Coating volume (m^3/yr)	Organic solvent[a] (% vol.)	Exhaust gas[b] (m^3/s)	Temp. (C°)	Time (s)	Fuel	Exhaust gas[c] (m^3/s)	Application	Cure	Total
1	Prime	High solids	13,000	1	0.010	19,500	12	60	62	0.63	38	0.531	164	1,200	Natural gas	0.019	166	41	207
	Top	High solids	13,000	1	0.010	31,688	20	60	62	1.71	38	1.062	164	1,200	Natural gas	0.022	449	112	561
																		Total	768
2	Prime	High solids	107,000	1	0.061	160,500	12	60	62	5.18	38	0.850	164	1,200	Natural gas	0.074	1,365	0,345	1,710
	Top	High solids	107,000	1	0.061	260,812	20	60	62	14.02	38	1.911	164	1,200	Natural gas	0.091	3,695	925	4,620
																		Total	6,330
3	Prime	High solids	657,000	3	0.086	4,822,380	15	60	62	194.45	38	4.531	164	1,200	Natural gas	0.764	51,300	12,800	64,100
	Top	High solids	657,000	3	0.086	1,616,220	30	60	62	130.34	38	10.194	164	1,200	Natural gas	0.562	34,300	8,600	42,900
																		Total	107,000
4	Prime	High solids	392,000	2	0.081	2,744,000	12	60	62	88.52	38	4.908	164	1,200	Natural gas	0.442	23,400	5,800	29,200
	Top	High solids	392,000	2	0.081	2,744,000	20	60	62	147.53	38	11.044	164	1,200	Natural gas	0.533	38,900	9,700	48,600
																		Total	77,800

[a] Assumed to be toluene.

[b] Minimum exhaust air (actual cubic meters) to provide an average face velocity of 0.635 m/s through the manual spray booth opening, 0.508 m/s through the disk spray booth opening; openings are 1.672 m^2.

[c] Minimum exhaust air (actual cubic meters) required to achieve concentration equal to 25 percent of lower explosive limit and provide adequate combustion air for burner.

TABLE 6-2. EQUIPMENT, ENERGY, AND MANPOWER REQUIREMENTS FOR MODEL PLANTS

Model plant	Equipment					Energy (GJ/yr)	Manpower						
	Washer	Dryoff oven	Manual application systems[a]	Automatic application systems[b]	Bake oven		Hanger	Chemist	Paint preparer	Pre-treater	Painter	Backup	Supervisor
Model plant 1													
Pretreatment	1	1	-	-	-	4,770	1	-	-	1	-	-	-
Prime coat	-	-	1	-	1	505	-	1	1	-	2	1	1
Top coat	-	-	1	-	1	575	1	1	1	-	3	1	1
Model plant 2													
Pretreatment	1	1	-	-	-	16,580	1	-	-	1	-	-	-
Prime coat	-	-	-	1	1	1,970	-	1	1	-	-	1	1
Top coat	-	-	-	1	1	2,150	1	1	1	-	2	1	1
Model plant 3													
Pretreatment	2	1	-	-	-	75,970	3	-	-	1	-	-	-
Prime coat	-	-	-	3	1	10,740	-	1	1	-	-	2	2
Top coat	-	-	-	3	1	9,400	3	1	1	-	6	2	2
Model plant 4													
Pretreatment	2	1	-	-	-	58,190	2	-	-	1	-	-	-
Prime coat	-	-	-	2	1	7,200	-	1	1	-	-	1	1
Top coat	-	-	-	2	1	7,850	2	1	1	-	4	1	1

[a]Prime coat system includes two water wash booths of one electrostatic gun each. Topcoat system includes two water wash booths of one electrostatic gun each, and one dry touchup booth with one manual air spray touchup gun.

[b]Prime coat system includes two booths with one high-speed reciprocating disk each. Topcoat system includes two water wash booths with one high-speed reciprocating disk each and two water wash touchup booths with one manual air spray touchup gun each.

assumption that new coating lines will meet existing regulations exactly may result in an overly optimistic estimate of the emissions reduction attributable to the NSPS. Energy and environmental impacts may also be misrepresented to the extent that portions of the industry would have voluntarily adopted more stringent controls than those required by existing regulations.

6.3.2 Regulatory Alternatives for Prime Coat Operations

The three regulatory alternatives examined for prime coat operations are:

- A-I--not promulgating an NSPS,
- A-II--promulgating an NSPS equivalent to the assumed CTG limit, and
- A-III--reducing emissions by 55 percent from the no NSPS baseline.*

The no NSPS alternative is discussed in Section 6.3.1. The no NSPS baseline is an emission limit equivalent to that resulting from the application of a coating containing 62 percent (vol.) solids applied at an assumed transfer efficiency of 60 percent.

Although the second alternative (promulgating an NSPS equivalent to the assumed CTG limit) would have a limited impact on emissions, it offers distinct advantages. The primary advantage is the specification of a minimum transfer efficiency dependent upon the solids content of the coating, which would provide a more solid basis for future NSPS revisions and would also permit an equivalence provision in the regulation. Such a provision would permit tradeoffs between solids content and transfer efficiency.

The third alternative (reducing emissions by 55 percent from the no NSPS baseline) could be accomplished through the use of a waterborne coating containing 0.38 kg VOC per liter of solids applied by EDP (transfer efficiency of 95 percent). EDP, the most effective control technology for prime coating operations, is gaining wide acceptance, particularly in the laundry products portion of the industry, because it provides superior corrosion resistance.

---

*Reduction specified as a percent by weight per volume of solids applied.

The control levels of each regulatory alternative are shown in Tables 6-3 through 6-6.

6.3.3 Regulatory Alternatives for Topcoat Operations

For topcoat application and cure, the range of regulatory alternatives available is adequately represented by the following:

- B-I--not promulgating an NSPS,
- B-II--promulgating an NSPS equivalent to the assumed CTG limit,
- B-III--reducing emissions by 30 percent from the no NSPS baseline,* and
- B-IV--eliminating emissions.

The no NSPS alternative is discussed above. As was the case for prime coat operations, the no NSPS baseline is an emission limit equivalent to the limit resulting from the application of a coating containing 62 percent (vol.) solids applied at an assumed transfer efficiency of 60 percent.

While the second alternative (promulgating an NSPS equivalent to the assumed CTG limit) would have a limited impact on emissions, it has the advantage of specifying a minimum transfer efficiency. This advantage has been discussed previously in conjunction with the comparable prime coat alternative.

The third alternative (reduction of emissions by 30 percent from the no NSPS baseline) is based on the application of a 70-percent (vol.) solids top coat applied at a 60-percent transfer efficiency. An equal reduction can be achieved with a 65.5-percent (vol.) solids top coat coupled with an incinerator (90 percent overall efficiency) on the topcoat oven exhaust.

The fourth regulatory alternative (elimination of emissions) can only be achieved through the use of 100 percent (vol.) solids coatings (i.e., powder). The use of powder is the most effective control technology for topcoat operations.

The levels of control of each of the regulatory alternatives are shown in Tables 6-3 through 6.6.

---

*Reduction specified as a percent by weight per volume of solids applied.

TABLE 6-3. MODEL PLANT 1: ANNUAL VOC EMISSIONS

Prime coat regulatory alternative	Topcoat regulatory alternative							
	B-I[a]		B-II[b]		B-III[c]		B-IV[d]	
	(kg/yr)	(% reduction)	(kg/yr)	(% reduction)	(kg/yr)	(% reduction)	(kg/yr)	(% reduction)
A-I[a]	768	0	768	0	599	22	0	100
A-II[b]	768	0	768	0	599	22	0	100
A-III[e]	747	3	747	3	578	25	0	100

[a]Not promulgating an NSPS.

[b]Promulgating an NSPS equivalent to the assumed CTG limit.

[c]Applying a 70-percent solids at 60 percent transfer efficiency.

[d]Applying a powder; prime coat not required.

[e]Applying a waterborne prime coat by EDP; area coated is twice the area for spray application.

TABLE 6-4. MODEL PLANT 2: ANNUAL VOC EMISSIONS

Prime coat regulatory alternative	Topcoat regulatory alternative							
	B-I[a]		B-II[b]		B-III[c]		B-IV[d]	
	(kg/yr)	(% reduction)	(kg/yr)	(% reduction)	(kg/yr)	(% reduction)	(kg/yr)	(% reduction)
A-I[a]	6,330	0	6,330	0	4,940	22	0	100
A-II[b]	6,330	0	6,330	0	4,940	22	0	100
A-III[e]	6,160	3	6,160	3	4,770	25	0	100

[a]Not promulgating an NSPS.

[b]Promulgating an NSPS equivalent to the assumed CTG limit.

[c]Applying a 70-percent solids at 60 percent transfer efficiency.

[d]Applying a powder; prime coat not required.

[e]Applying a waterborne prime coat by EDP; area coated is twice the area for spray application.

TABLE 6-5. MODEL PLANT 3: ANNUAL VOC EMISSIONS

Prime coat regulatory alternative	Topcoat regulatory alternative							
	B-I[a]		B-II[b]		B-III[c]		B-IV[d]	
	(kg/yr)	(% reduction)	(kg/yr)	(% reduction)	(kg/yr)	(% reduction)	(kg/yr)	(% reduction)
A-I[a]	107,000	0	107,000	0	94,100	12	64,100	40
A-II[b]	107,000	0	107,000	0	94,100	12	64,100	40
A-III[e]	71,900	33	71,900	33	59,000	45	28,900	73

[a]Not promulgating an NSPS.

[b]Promulgating an NSPS equivalent to the assumed CTG limit.

[c]Applying a 70-percent solids at 60 percent transfer efficiency.

[d]Applying a powder.

[e]Applying a waterborne prime coat by EDP.

TABLE 6-6. MODEL PLANT 4: ANNUAL VOC EMISSIONS

Prime coat regulatory alternative	Topcoat regulatory alternative							
	B-I[a]		B-II[b]		B-III[c]		B-IV[d]	
	(kg/yr)	(% reduction)	(kg/yr)	(% reduction)	(kg/yr)	(% reduction)	(kg/yr)	(% reduction)
A-I[a]	77,800	0	77,800	0	63,100	19	0	100
A-II[b]	77,800	0	77,800	0	63,100	19	0	100
A-III[e]	74,900	4	74,900	4	60,300	22	0	100

[a]Not promulgating an NSPS.

[b]Promulgating an NSPS equivalent to the assumed CTG limit.

[c]Applying a 70-percent solids at 60 percent transfer efficiency.

[d]Applying a powder; prime coat not required.

[e]Applying a waterborne prime coat by EDP; area coated is twice the area for spray application.

6.4 REFERENCES

1. EPA Economic Information System (EIS), Plant Data Base. EPA Technical Library. Research Triangle Park, NC. 1978.

2. Major Household Appliance Industry. In: Current Industrial Reports. Bureau of the Census, U.S. Department of Commerce. MA-36F (77)-1. Washington, DC. 1978.

3. Emissions Standards and Engineering Division, U.S. Environmental Protection Agency. Control of Volatile Organic Emissions From Existing Stationary Sources--Volume V: Surface Coating of Large Appliances. Research Triangle Park, NC. EPA-450/2-77-034. December 1977.

ANNEX TO CHAPTER 6

SAMPLE CALCULATIONS--MODEL PLANT 2

VOC EMISSIONS

Prime Coat

$$160{,}500 \frac{m^2 \text{ of appliance coated}}{yr} \times 12 \times 10^{-6} \text{ m thick}$$

$$\times \frac{m^3 \text{ of coating}}{0.62\ m^3 \text{ of coating solids}} \times \frac{m^3 \text{ of coating used}}{0.60\ m^3 \text{ of coating applied to parts}}$$

$$= 5.18 \frac{m^3 \text{ of coating used}}{yr}$$

Organic solvent assumed to be toluene

$$5.18 \frac{m^3 \text{ of coating used}}{yr} \times 0.38 \frac{m^3 \text{ VOC emitted}}{m^3 \text{ coating}}$$

$$\times 867 \frac{kg \text{ VOCs}}{m^3 \text{ VOCs}} = 1{,}706 \frac{kg \text{ VOCs emitted}}{yr}$$

80% of emissions in application (including flashoff)

20% of emissions in cure oven

$$1{,}706 \frac{kg \text{ VOCs emitted}}{yr} \times 0.80 = 1{,}365 \frac{kg \text{ VOCs emitted in application}}{yr}$$

$$1{,}706 \frac{kg \text{ VOCs emitted}}{yr} \times 0.20 = 341 \frac{kg \text{ VOCs emitted in cure oven}}{yr}$$

Top Coat

$$260{,}812 \frac{m^2 \text{ coated}}{yr} \times 20 \times 10^{-6} \text{ m thick} \times \frac{m^3 \text{ coating}}{0.62\ m^3 \text{ solid}}$$

$$\times \frac{m^3 \text{ coating used}}{0.60\ m^3 \text{ coating applied to parts}} \times 0.38 \frac{m^3 \text{ VOC emitted}}{m^3 \text{ coating}} \times 867 \frac{kg \text{ VOCs}}{m^3 \text{ VOCs}}$$

$$= 4{,}619 \frac{kg \text{ VOCs emitted}}{yr}$$

$$4{,}619 \frac{kg \text{ VOCs}}{yr} \times 0.80 = 3{,}695 \frac{kg \text{ VOCs emitted in application}}{yr}$$

$$4{,}619 \frac{kg \text{ VOCs}}{yr} \times 0.20 = 924 \frac{kg \text{ VOCs emitted in cure oven}}{yr}$$

ENERGY REQUIREMENTS

Pretreatment--Washer

Cleaner Stage

7 rings with 16 nozzles per ring

$$0.0228 \frac{m^3 \text{ of fluid}}{\text{minute nozzle}}$$

Fluid temperature: 71° C

$$7 \text{ rings} \times \frac{16 \text{ nozzles}}{\text{ring}} \times \frac{0.02275 \text{ m}^3}{\text{minute nozzle}} \times 1.625 \times 10^7 \frac{J}{m^3} \times \frac{60 \text{ min}}{\text{hr}}$$

$$\times \frac{2{,}000 \text{ hr}}{\text{yr}} \times \frac{GJ}{10^9 \text{ J}} \times 2 \text{ cleaning stages} = 9{,}937 \frac{GJ}{yr}$$

Rinse Stage

6 rings with 10 nozzles per ring

$$0.0228 \frac{m^3 \text{ of fluid}}{\text{minute nozzle}}$$

Fluid temperature: 71° C

$$6 \text{ rings} \times \frac{10 \text{ nozzles}}{\text{ring}} \times 0.02275 \frac{m^3}{\text{minute nozzle}} \times 1.625 \times 10^7 \frac{J}{m^3}$$

$$\times 60 \frac{\text{min}}{\text{hr}} \times 2{,}000 \frac{\text{hr}}{\text{yr}} \times \frac{GJ}{10^9 \text{ J}} \times 2 \text{ rinse stages} = 5{,}324 \frac{GJ}{yr} .$$

Total washer energy requirements: $15{,}261 \frac{GJ}{yr}$.

Pretreatment--Dryoff Oven

Dimensions: 100 ft long by 5 ft wide by 7 ft high

Surface area: $2(100 \text{ ft} \times 5 \text{ ft}) + 2(5 \text{ ft} \times 35 \text{ ft}) + 2(100 \text{ ft} \times 7 \text{ ft})$
$= 2{,}470 \text{ ft}^2 = 228 \text{ m}^2$

Oven temperature: 150° C

Radiation loss

$$228 \text{ m}^2 \times \frac{6{,}128 \text{ J}}{\text{hr-m}^2\text{-}^\circ\text{C}} \times (150^\circ \text{ C} - 20^\circ \text{ C}) \times \frac{2{,}000 \text{ hr}}{\text{yr}}$$

$$\times \frac{GJ}{10^9 \text{ J}} = 363 \text{ GJ/yr}$$

Heat conveyor

Line speed = 0.061 m/s.

Assume steel construction, conveyor reaches 127° C.

$$0.061 \frac{m}{s} \times 32.74 \frac{kg}{m} \times 1{,}000 \frac{gm}{kg} \times (127° C - 20° C) \times 0.125 \frac{cal}{gm\ °C}$$

$$\times \frac{J}{0.239\ cal} \times \frac{GJ}{10^9\ J} \times 3{,}600 \frac{s}{hr} \times 2{,}000 \frac{hr}{yr} = 804\ GJ/yr$$

Heat appliances

Assume 1.5 lb/ft^2 (7.32 kg/m^2) coated.

$$160{,}500 \frac{m^2\ coated}{yr} \times 7.32 \frac{kg}{m^2} \times 1{,}000 \frac{gm}{kg} \times 0.125 \frac{cal}{gm\ °C} \times (150° C - 20° C)$$

$$\times \frac{J}{0.239\ cal} \times \frac{GJ}{10^9\ J} = 80\ GJ/yr$$

Heat air

Solution is by trial and error. Only air requirements are for natural gas burner.

(1) Sum of energy requirements found so far:

363 GJ/yr + 804 GJ/yr + 80 GJ/yr = 1,247 GJ/yr .

(2) Air required for combustion to provide the total energy requirement:

$$1{,}247 \frac{GJ}{yr} \times \frac{10^9\ J}{GJ} \times \frac{yr}{2{,}000\ hr} \times 2.83 \times 10^{-7} \frac{m^3}{J} \times \frac{hr}{3{,}600\ s}$$

$$= 0.049 \frac{m^3}{s}\ \text{air @ STP} .$$

(3) Energy required to heat air to oven temperature:

$$0.049 \frac{m^3\ air}{s} \times \frac{1{,}294.5\ gm}{m^3\ air\ @\ STP} \times 0.24 \frac{cal}{gm\ °C} \times (150° C - 10° C) \times 3{,}600 \frac{s}{hr}$$

$$\times 2{,}000 \frac{hr}{yr} \times \frac{J}{0.239\ cal} \times \frac{GJ}{10^9\ J} = 64\ GJ/yr .$$

(4) Add this energy requirement to sum found in Step 1:

1,247 GJ/yr + 64 GJ/yr = 1,311 GJ/yr .

(5) Recalculate combustion air and energy to heat it:

$$1{,}311\ \frac{GJ}{yr} \times \frac{10^9\ J}{GJ} \times \frac{yr}{2{,}000\ hr} \times 2.83 \times 10^{-7}\ \frac{m^3}{J} \times \frac{hr}{3{,}600\ s}$$

$$\times\ 1{,}294.5\ \frac{gm}{m^3} \times 0.24\ \frac{cal}{gm\ ^oC} \times (150 - 10)\ ^oC \times 3{,}600\ \frac{s}{hr}$$

$$\times\ 2{,}000\ \frac{hr}{yr} \times \frac{J}{0.239\ cal} \times \frac{GJ}{10^9\ J} = 67\ \frac{GJ}{yr}\ .$$

A repeated iteration would not significantly increase accuracy. Total pretreatment dryoff oven energy requirement is: $1{,}314\ \frac{GJ}{yr}$.

Total pretreatment energy requirement is:

$$15{,}261\ \frac{GJ}{yr} + 1{,}314\ \frac{GJ}{yr} = 16{,}575\ \frac{GJ}{yr}\ .$$

Prime Coat Application

$$1.672\ m^2 \text{ of booth openings} \times 30.48\ \frac{\text{actual m}}{min} = 50.98 \text{ actual } m^3/min\ .$$

$$50.98\ \frac{m^3}{min} \times \frac{273 \text{ standard } m^3}{293 \text{ actual } m^3} \times 1{,}294.5\ \frac{gm}{m^3} \times 0.24\ \frac{cal}{gm\ ^oC} \times (20^o\ C - 10^o\ C)$$

$$\times\ 60\ \frac{min}{hr} \times 2{,}000\ \frac{hr}{yr} \times \frac{J}{0.239\ cal} \times \frac{GJ}{10^9\ J} = 74\ GJ/yr$$

Prime Coat Cure Oven

Oven dimensions: 80 ft long by 16 ft wide by 8 ft high

Surface area: $2(80 \times 16) + 2(8 \times 16) + 2(8 \times 80) = 4{,}096\ ft^2 = 381\ m^2$

Oven temperature: 164° C

Calculations similar to dryoff oven except that air to maintain a maximum of 25% of LEL must be supplied.

Organic solvent assumed to be toluene:

$$Q = \frac{(403)\ (D)\ (100)\ (C)}{(MW)\ (LEL)\ (B)}\ .$$

Q = exhaust gas flow, actual ft^3 @ 70° F/pt of VOCs emitted.

D = density 0.866 g/mℓ.

C = safety factor (to maintain vapor concentration at 25 percent of the LEL in continuous, properly ventilated ovens, $\ell = 4$).

MW = molecular weight of toluene, 92.13 lb/lb-mole.

LEL= lower explosive limit of toluene in percent, 1.4%.

B = constant to account for the fact that the LEL decreases at elevated temperatures (B = 0.7 for temperatures above 250° F).

$$\frac{(403)\ (0.866)\ (100)\ (4)}{(92.13)\ (1.4)\ (0.7)} = 1{,}546\ \frac{\text{acf @ 70 °F}}{\text{pt of VOCs}} = 92{,}560\ \frac{\text{actual m}^3\text{ of air @ 21° C}}{\text{m}^3\text{ of VOCs}}$$

$$341\ \frac{\text{kg VOCs}}{\text{yr}} \times \frac{\text{m}^3}{866\text{ kg}} \times 92{,}560\ \frac{\text{am}^3\text{ of air}}{\text{m}^3\text{ of VOCs}} \times \frac{273\text{ sm}^3}{294\text{ am}^3}$$

$$\times \frac{\text{yr}}{2{,}000\text{ hr}} \times \frac{\text{hr}}{3{,}600\text{ s}} = 0.0047\ \frac{\text{m}^3\text{ at STP}}{\text{s}}$$

$$0.0047\ \frac{\text{m}^3}{\text{s}} \times 1{,}294.5\ \frac{\text{gm}}{\text{m}^3} \times 0.24\ \frac{\text{cal}}{\text{gm °C}} \times (164°\text{ C} - 10°\text{ C}) \times 3{,}600\ \frac{\text{s}}{\text{hr}}$$

$$\times\ 2{,}000\ \frac{\text{hr}}{\text{yr}} \times \frac{\text{J}}{0.239\text{ cal}} \times \frac{\text{GJ}}{10^9\text{ J}} = 7\text{ GJ/yr}$$

Total prime coat energy requirement

Application	74 GJ/yr
Radiation losses	653 GJ/yr
Conveyor	1,053 GJ/yr
Appliances	86 GJ/yr
Heat total air	103 GJ/yr
Total	1,972 GJ/yr

Topcoat Application

Similar to prime coat application except additional ventilation air is required for the touchup booth:

$1.672\ \text{m}^2$ of booth opening $\times\ 38.10\ \frac{\text{m}}{\text{min}} = 63.07\ \frac{\text{am}^3}{\text{min}}$, which is added to the direct application air, $50.98\ \frac{\text{am}^3}{\text{min}}$, for a total of $114.68\ \frac{\text{am}^3}{\text{min}}$.

Topcoat Cure Oven

Same procedure as for prime coat. Oven parameters are the same.

7. ENVIRONMENTAL IMPACT

7.1 GENERAL

Surface coating lines for large appliances are stationary point sources of organic solvent emissions. These emissions occur entirely inside a plant, during coating application, solvent flashoff, and the curing process. Chapter 6 discusses several model plants that were used to estimate the volatile organic compound (VOC) emissions from prime coating and top coating representative large appliances in four Standard Industrial Classification (SIC) categories:

3631: Household Cooking Equipment,

3632: Household Refrigerators and Home and Farm Freezers,

3633: Household Laundry Equipment, and

3639: Household Appliances, Not Elsewhere Classified.

The objective of this New Source Performance Standard (NSPS) is to limit VOC emissions through standards that reflect the degree of emission reduction achievable by using the best system of continuous emission reduction. The Control Techniques Guidelines (CTGs) call for using reasonably available control technology (RACT) to control existing sources. Several alternative solvent emission control techniques (options) have been identified in the large appliance industry, the environmental impacts of which are discussed in this chapter.

Total U.S. VOC emissions resulting from the surface coating of major household appliances were determined for 1981, assuming the use of 62 percent solids coatings for both prime coats and top coats, a standard area of metal coated for each appliance, a U.S. production figure for each representative appliance, and toluene as the organic solvent. Estimates were made of 1986 emissions, assuming the imposition of the various regulatory alternatives.

7.2 STATE REGULATIONS AND CONTROLLED EMISSIONS

7.2.1 Revised State Implementation Plans and VOC Regulations

The Clean Air Act Amendments of 1977 require each State not meeting primary standards for photochemical oxidants to submit to EPA a revised State Implementation Plan (SIP) containing regulations for the control of VOC emissions from existing stationary sources in nonattainment areas. The regulations are to be based on RACT and are to be modeled after the recommended standard contained in the CTG document for that particular source category.

The CTG for the surface coating of large appliances recommends a VOC emission limit of 0.34 kg/ℓ (2.8 lb/gal) of coating (minus water). The standard can be achieved through the application of add-on controls or through the use of low-organic-solvent coating technology.

States are also encouraged to adopt the 1976 EPA policy regarding the use of photochemically reactive organic compounds (41 FR 5350, February 5, 1976[1]). Generally, this policy recognizes that nearly all of the previously acceptable organic-solvent compounds listed in Appendix B of 40 CFR Part 51[2] are ultimately photochemically reactive.

Revised SIP regulations are expected to have a significant impact on VOC emissions from existing facilities. Of the 171 large appliance surface coating facilities, a total of 123 are located in nonattainment areas where these VOC regulations will apply. However, only a portion of the draft plans required from 41 States have been submitted to EPA to date. For this reason Section 7.2.2, below, focuses on State regulations that are currently in effect.

7.2.2 State Regulations and Controlled Emissions

Sixteen States currently apply specific organic-solvent usage regulations on a statewide basis. With few exceptions, these regulations prescribe specific numerical limitations unless emissions are reduced by 85 percent prior to discharge. Regulations typically require that reduction be achieved through incineration, adsorption, or other equally efficient State-approved means. Such regulations usually provide that oven emissions not exceed 3 lb/hr, or a total of 15 lb/day.

Many States also impose a limitation of 8 lb/hr of photochemically reactive solvents, or a total of 40 lb/day. A majority of States require

that any emissions resulting from the actual drying period (up to 12 hours), as well as from the use of solvents for the cleanup of machinery, be included as emissions sources. However, the typical regulation contains a provision that permits the sale or disposal of containers of up to 1½ gallons of such matter. Such provisions are usually directed at the use of photochemically reactive solvents in architectural coatings.

Limitations on photochemically nonreactive emissions are currently imposed by only four States: California, Colorado, Connecticut, and Oklahoma. Connecticut, with the most stringent standards, determines that emissions may not exceed 160 lb/hr or a total of 800 lb/day, unless reduced by 85 percent prior to discharge. However, California, which currently imposes a limitation of 396 lb/hr (not to exceed 2,970 lb/day), will require that sources emit no more than 81 lb/hr (or 600 lb/day) of photochemically nonreactive solvents by December 1980. In contrast, both Colorado and Oklahoma currently impose an emission limitation of 450 lb/hr of photochemically nonreactive matter, or a total of emissions that may not exceed 3,000 lb/day.

As noted, most regulations encourage the use of photochemically nonreactive solvents by offering exemptions for their use. Both Indiana and Virginia provide specific exemptions for surface coating operations that use nonphotochemically reactive solvents. Similar provisions are included in regulations developed in Colorado and Louisiana, although, with evidence of economic hardship, some exemptions from emission limitations may still be obtained.

The majority of States or localities that have promulgated specific solvent regulations also provide one or more of the following use or process exemptions for paint and coating operations:

- Application of waterborne or high-solids coatings;
- Manufacture, transport, and storage of organic solvents; and
- Application, sale, and disposal of architectural coatings containing photochemically nonreactive solvents.

Some States exempt surface coating operations entirely from regulatory restrictions. For example, Alabama does not impose an emission limitation on the application of organic solvents in paint spray booth installations. Other States permit higher emissions from painting operations, depending on

the size of the facility or the amount of coating used. A regulation imposed in Connecticut exempts all equipment used in surface coating operations if the quantity of coating (including organic solvent) is less than 30 lb/hr. In Illinois, painting operations that use less than 5,000 gal/yr of coating (including organic solvent) are exempted from regulation. Wisconsin permits spray booth operations to emit up to 30 lb/hr of organic solvent in lieu of the 15-lb/hr limitation imposed on other sources.

Of those 36 States that currently provide general control of VOC emissions through permit systems, most specifically address emissions resulting from paint and coating operations. Generally, facilities must register as emission sources pursuant to their State permit system requirements. Although emission reductions may be required on a case-by-case basis, specific emission limitations are not imposed. However, sources may not permit emissions that violate applicable ambient air quality standards or other Federal laws. State regulations often exempt the following equipment from permit requirements:

- Porcelain enameling furnaces and drying ovens,
- Sources emitting less than 10 lb/hr of VOCs,
- Unheated rinsing or solvent-dispensing containers under 60 gallons, and
- Equipment used exclusively for washing or drying products fabricated from metal.

7.3 OPTIONS: UNCONTROLLED AND CONTROLLED EMISSIONS

The CTG for large appliance surface coating recommends the use of coatings containing a maximum of 0.34 kg of organic solvent per liter of coating (less water). In response to these guidelines, States are submitting revised SIPs to control VOCs. It appears that most of these revised SIPs will incorporate the CTG-recommended limit exactly. Therefore, this level of control represents the baseline with which the effects of the various regulatory alternatives are to be compared. Because the concept of transfer efficiency was not included in the CTG, an industry average transfer efficiency has been assumed for making these comparisons. Thus, the no NSPS baseline is an emission limit equal to the limit resulting from a coating containing 62 percent (vol.) solids applied at an assumed transfer efficiency of 60 percent. Estimates of nationwide emissions have been made

for each regulatory alternative for 1981--the year of promulgation--and for 1986. For a historical perspective of these estimates, nationwide emissions for the industry for 1976 have also been estimated. These estimates are shown in Table 7-1 and Figures 7-1 through 7-3, which follow.

7.4 WATER POLLUTION IMPACTS

Wastewater sources from large appliance surface coating operations consist of discharges from paint booths, EDP operations, and associated rinses. These discharges include paint, paint additives, and rinse water. Analytical tests have been completed on samples taken from each of these discharges, with analysis schemes based on historical knowledge of pollutants in paint. Many of the pollutants characterized are on the water priority pollutant list.[3]

The efficiency of paint application is a significant factor in the quantities of pollutants discharged because the majority of the paint solids not applied to the product are trapped in the water curtain designed for this purpose.

7.4.1 Paint Booth Effluents

Sludge accumulates in spray booths to the point that they are periodically drained and cleaned. The usual time interval for this process is about 1 month, although paint type, paint additives, application method, transfer efficiency, paint booth size, and line speed all influence the time interval.

The sludge is almost entirely composed of the paint solids overspray. Some of the VOCs, which also constitute part of the overspray, are initially entrapped in the water wash spray, but most of these VOCs are eventually reevaporated into the atmosphere. The solids are mechanically separated from the water to form a sludge, leaving some organics in the water from the solvent and the solids.

The most commonly detected organic pollutants in significant quantities were toluene, bis(2-ethylhexyl)phthalate, naphthalene, and ethylbenzene. These organics are all found in substantial quantities as constituents of paint.[3]

The mass discharge rates of these pollutants should not increase with any NSPS option. The transfer efficiency of spray painting should not

TABLE 7-1. ANNUAL VOC EMISSIONS ESTIMATES: 1976, 1981, 1986

Product	Production (10^3 units)[a]			Prime coat						Top coat						
						Annual VOC emissions (Mg)[b]						Annual VOC emissions (Mg)[c]				
	1976	1981	1986	Area (m^2)	t μm	1976	1981	1986 A-I, A-II	1986 A-III	Area (m^2)	t μm	1976	1981	1986 B-I, B-II	1986 B-III	1986 B-IV
Compactor	249	325	415	2.0	12	24	7	9	9	2.0	20	40	12	15	13	9
Dishwasher	3,140	3,540	4,645	1.0	12	152	38	49	47	1.0	20	254	63	82	73	50
Disposer	2,516	3,200	4,330	0.25	12	31	8	12	11	0.25	20	51	14	19	17	11
Dryer	3,173	3,555	3,895	8.5	15	1,637	401	440	375	2.75	30	1,059	260	285	261	208
Freezer	1,542	1,720	1,930	7.0	12	519	130	141	137	7.0	20	864	216	234	214	165
Microwave oven	1,749	3,300	4,690	0.75	12	64	26	37	36	0.75	20	106	44	62	54	35
Range	4,287	5,000	5,965	1.75	12	364	93	111	107	3.0	20	1,040	266	317	286	213
Refrigerator	4,817	5,850	6,665	7.0	12	1,642	433	498	484	7.0	20	2,737	722	832	757	586
Washer	4,492	5,080	5,590	6.50	15	1,722	439	483	410	2.25	30	1,227	304	334	307	243
Water heater	5,728	5,780	7,435	2.0	12	556	123	158	152	2.0	20	927	205	263	233	164
Total						6,761	1,698	1,938	1,767			8,305	2,106	2,443	2,215	1,684

Note: The entries are shown for comparison. They should not be taken to indicate the precision of the data.

[a]Production data:

1976: yearly production figure for each appliance from Appliance magazine, April 1980.[4]
1981: yearly production figure for each appliance from Appliance magazine, January 1980.[5]
1986: yearly production figure for each appliance obtained by extending for 1 year the annual average growth rate projected by Appliance magazine, January 1980,[5] for the 1981-1985 period.

[b]Prime coat emissions:

1976: equivalent to coatings containing 30 percent (vol.) solids applied at a transfer efficience of 50 percent.
1981: equivalent to CTG-recommended coating containing 62 percent (vol.) solids applied at an assumed transfer efficiency of 60 percent.
1986: assumes that 20 percent of 1981 production will be subject to the NSPS because of modification/reconstruction provisions and that all growth occurring between 1981 and 1986 will also be subject to the NSPS.

A-I: no NSPS.
A-II: equivalent to 62 percent (vol.) solids applied at a transfer efficiency of 60 percent.
A-III: equivalent to electrodeposition process containing 0.38 kg VOC per liter of solids applied at a transfer efficiency of 95 percent. Except for washers and dryers, the area coated is twice the area for spray applications.
For a complete description of Regulatory Alternatives A-I, A-II, and A-III, see Chapter 6.

[c]Topcoat emissions:

1976: equivalent to coatings containing 30 percent (vol.) solids applied at a transfer efficiency of 50 percent.
1981: equivalent to CTG-recommended coating containing 62 percent (vol.) solids applied at an assumed transfer efficiency of 60 percent.
1986: Assumes that 20 percent of 1981 production will be subject to the NSPS because of modification/reconstruction provisions and that all growth occurring between 1981 and 1986 will also be subject to the NSPS.

B-I: no NSPS.
B-II: equivalent to 62 percent (vol.) solids applied at a transfer efficiency of 60 percent.
B-III: equivalent to 70 percent (vol.) solids applied at a transfer efficiency of 60 percent or 65.5 percent (vol.) solids plus an incinerator on the topcoat oven.
B-IV: powder; prime coat not required except for dishwashers, washers, and dryers.

For a complete description of Regulatory Alternatives B-I, B-II, B-III, and B-IV, see Chapter 6.

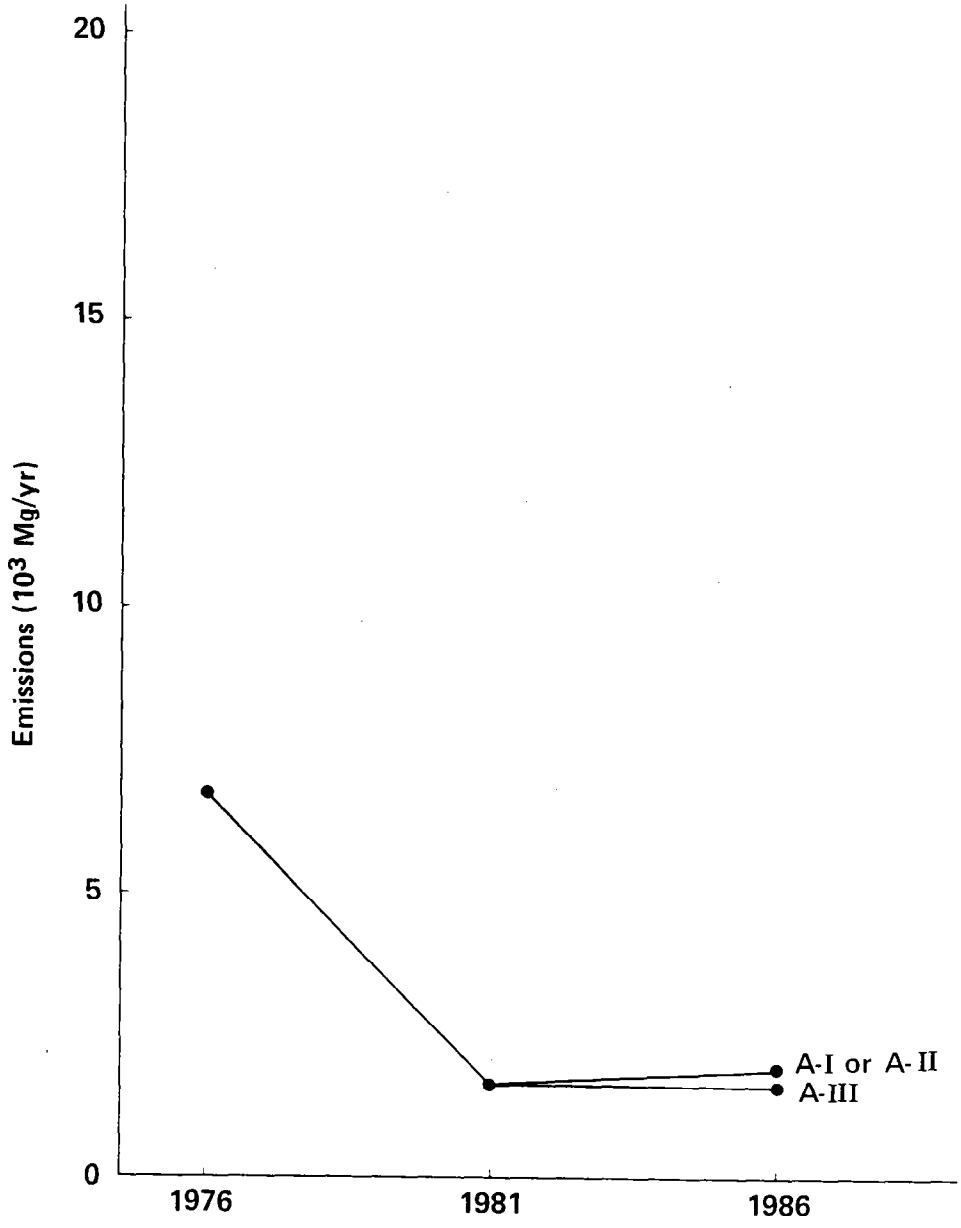

Figure 7-1. Annual prime coat emissions for various regulatory alternatives.

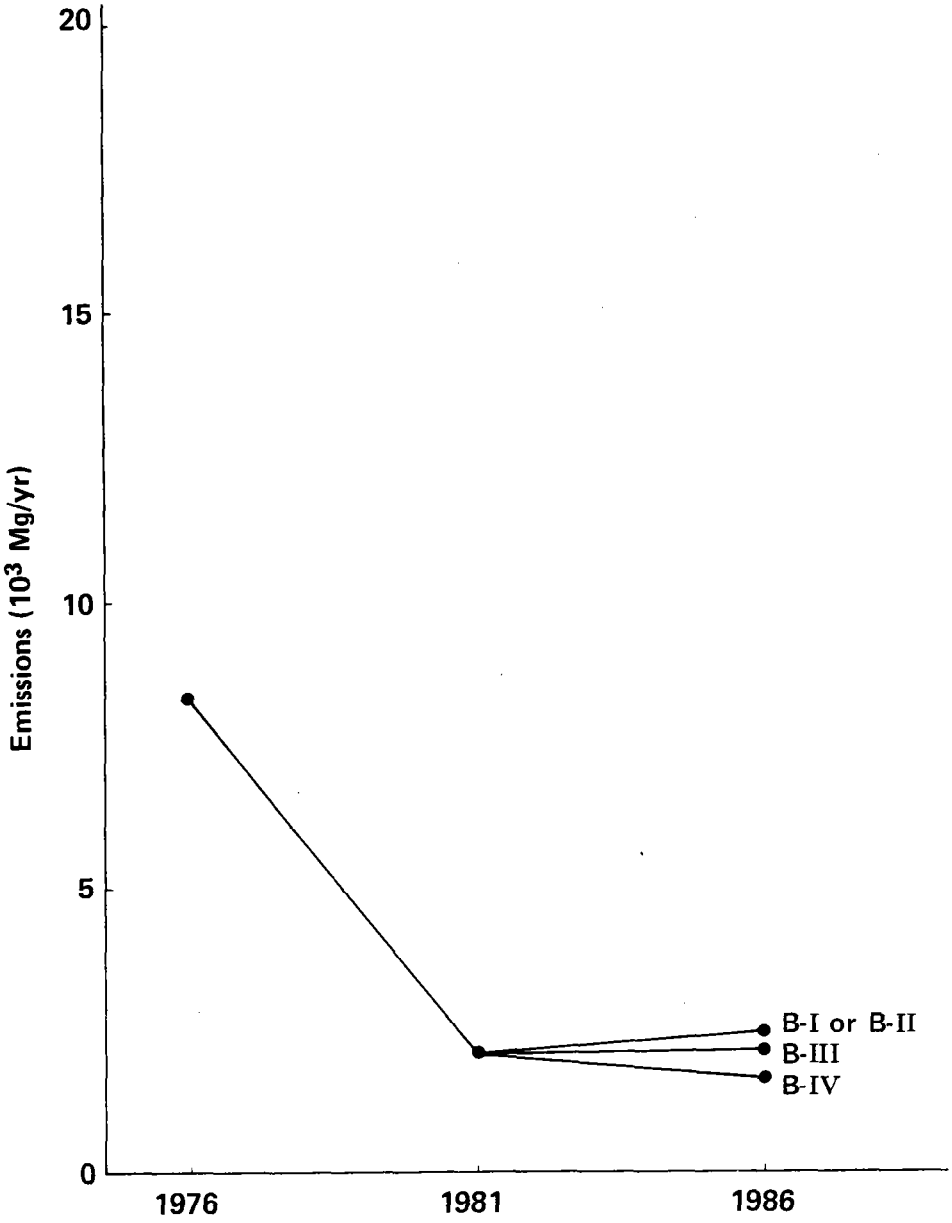

Figure 7-2. Annual topcoat emissions for various regulatory alternatives.

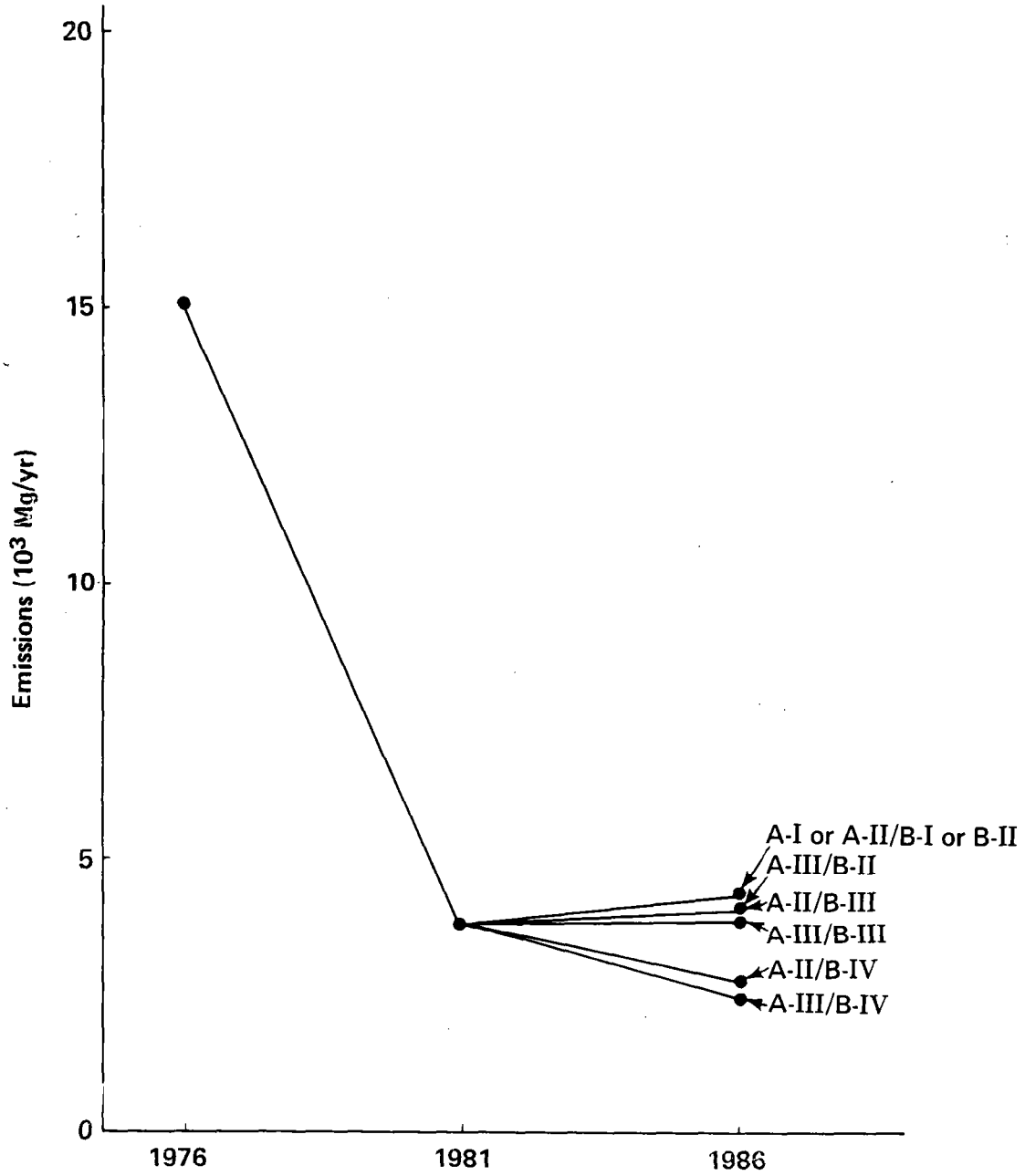

Figure 7-3. Combined annual emissions (prime coat and topcoat) for various regulatory alternatives.

decrease with the spraying of coatings with higher solids concentration.[6] Therefore, no greater amounts of solids or organic solvent should be entrapped in spray booth water.

7.4.2 EDP Effluents

Priority pollutants found in EDP processes come mainly from rinse water and to a lesser extent spills and drips from the actual coating in the dip tank. Commonly detected pollutants are toluene, phenol, ethylbenzene, bis(2-ethylhexyl)phthalate, and methyl chloride.[3] One source has analyzed anodic rinse effluent and determined a 5-day Biochemical Oxygen Demand (BOD_5) of about 1,000 mg/ℓ.[3] Another source indicates that a BOD_5 from anodic permeate may be as high as 10,000 mg/ℓ and have a Chemical Oxygen Demand (COD) of 40,000 mg/ℓ.[7] Although the volumes of these wastes are small, they have a high pollution potential.

If there is a shift from organic-solvent-based systems to EDP, the BOD_5 and COD load to the plant wastewater will increase. This increase is not believed to be of sufficient magnitude to impact on existing water pollution problems.

7.4.3 Conclusions, Water Impacts

The surface coating of large appliances detrimentally affects the water environment. However, the problem would be minimal with any of the options proposed for NSPS development. As noted, transfer efficiency will not diminish with the spraying of coatings with higher solids concentrations.[6] Thus, no greater quantity of solids or organic solvent should enter the spray booth or EDP water.

7.5 SOLID WASTE IMPACTS

No serious solid waste impacts are associated with any of the regulatory alternatives. Sludge requiring eventual disposal may develop in an EDP dip tank but is usually the result of improperly controlled chemistry or poor upkeep.[3] Likewise, sludge may accumulate on the spray booth walls or floor. In the case of spray booth sludge, however, the volume is expected to decrease because improved transfer efficiencies will decrease the amount of overspray. Although not an incremental impact attributable to any of the regulatory alternatives, these paint wastes have been defined as hazardous in 40 CFR 261.31[8] and therefore must be disposed of in accordance with 40 CFR Part 262.[9]

Reuse of coatings containers makes their impact on solid waste small.

7.6 ENERGY IMPACT

The energy usage in the large appliance surface coating industry is presented in Table 7-2. The energy used in 1976 is contrasted with projections of energy use for 1981 and for 1986, assuming the imposition of the several regulatory alternatives. The projections are based on estimates of energy consumption per unit of production developed for the model plants in Chapter 6.

As shown in Table 6-2, pretreatment (cleaning and dryoff) accounts for roughly 80 percent of the energy consumed in coating operations. Because pretreatment energy is such a large portion of the total, none of the regulatory alternatives has an impact of more than 5 percent in a typical plant. The nationwide impact (Table 7-2) is even less significant because only a fraction of the industry will be subject to the NSPS by 1986.

If the pretreatment energy is excluded, the relative impacts of the several regulatory alternatives become more clear. Although the EDP process (Regulatory Alternative A-III) is more energy intensive than spray prime coating methods, a net energy savings is possible because parts can be placed in the EDP tank while still wet. Hence, the need for a dryoff oven is eliminated and an energy savings of approximately 10 percent results. On the other hand, use of an incinerator with 60 percent heat recovery on the topcoat oven (Regulatory Alternative B-III) would increase energy consumption approximately 8 percent. Powder (Regulatory Alternative B-IV) would result in a savings of roughly 20 percent. The savings is possible because, except in the case of laundry equipment and dishwashers, powder can be applied direct-to-metal and the prime coat step eliminated.

7.7 OTHER ENVIRONMENTAL IMPACTS

No other environmental impacts are expected to arise from standards of performance for large appliance surface coating, regardless of the alternative emission control system selected as the basis for standards.

7.8 OTHER ENVIRONMENTAL CONCERNS

7.8.1 Irreversible and Irretrievable Commitment of Resources

The alternative control systems will require installation of additional equipment in new sources for each alternative emission control system,

TABLE 7-2. ESTIMATES OF ANNUAL ENERGY CONSUMPTION: 1976, 1981, 1986

SIC code	Production (10^3 units)[a]			Annual energy consumption (10^3 GJ)[b]			1986 incremental consumption[c]		
	1976	1981	1986	1976	1981	1986 No NSPS	A-III	B-III	B-IV
3631 - Household Cooking Equipment	6,036	8,300	10,385	1,158	1,606	2,009	(28)	36	(56)
3632 - Household Refrigerators and Freezers	6,359	7,570	8,595	1,211	1,414	1,606	(15)	6	(45)
3633 - Household Laundry Equipment	7,665	8,635	9,485	1,090	1,263	1,388	(5)	7	3
3639 - Household Appliances not Elsewhere Classified	11,613	12,845	16,825	1,933	2,153	2,820	(27)	21	(47)

[a]Production data:

1976: yearly production figure for each appliance from Appliance magazine, April 1980.[4]
1981: yearly production figure for each appliance from Appliance magazine, January 1980.[5]
1986: yearly production figure for each appliance obtained by extending for 1 year the annual average growth rate projected by Appliance magazine, January 1980,[5] for the 1981-1985 period.

[b]Annual energy consumption:

1976: assumes the use of coatings containing 30 percent (vol.) solids applied at a transfer efficiency of 50 percent.
1981: assumes the use of CTG-recommended coatings containing 62 percent (vol.) solids applied at an assumed transfer efficiency of 60 percent.
1986 (No NSPS): energy required for any combination of prime coat Regulatory Alternatives A-I or A-II and topcoat Regulatory Alternatives B-I, B-II, or B-IV.

SIC 3631: based on energy consumption per unit of production for Model plant 2, Chapter 6.
SIC 3632: based on energy consumption per unit of production for Model plant 4, Chapter 6.
SIC 3633: based on energy consumption per unit of production for Model plant 3, Chapter 6.
SIC 3639: based on average energy consumption per unit of production developed for Model plants 1, 2, 3, and 4, Chapter 6.

[c]1986 incremental consumption:

A-III: incremental energy required if Regulatory Alternative A-III is adopted.
B-III: incremental energy required if Regulatory Alternative B-III (incineration option) is adopted;
B-IV: incremental energy required if Regulatory Alternative B-IV is adopted; assumes that 20 percent of 1981 production will be subject to the NSPS because of modification/reconstruction provisions and that all growth occurring between 1981 and 1986 will also be subject to the NSPS.

except for the 62-percent solids topcoat option. This requirement will necessitate the additional use of steel and other resources. The commitment of resources will be small compared to national use of each resource. Ultimately, a good quantity of these resources will be salvaged and recycled. No significant amounts of space (or land) are required to install control equipment and/or new coating technology because all control systems can be located within little additional space. Therefore, only limited land commitment is expected for additional control devices and/or application equipment.

7.8.2 Environmental Impact of Delayed Standards

Delay of standards proposal for the large appliance surface coating industry will have minor negative environmental effects on hydrocarbon emissions to the atmosphere and minor or no impacts on water and solid waste. Furthermore, no emerging emission control technology appears to be on the horizon that could achieve greater emission reductions or result in lower costs than those represented by the emission control alternatives considered here. Consequently, delaying standards to allow further technical developments appears to present no tradeoff of higher organic-solvent emissions in the near future for lower emissions in the distant future.

7.8.3 Environmental Impact of No Standards

Growth projections are presented in earlier sections. The increase in production of all large appliances will add little to nationwide VOC emissions.

Essentially no adverse water and solid waste disposal impacts are associated with the alternative emission control systems proposed in this section. Therefore, as in the case of delayed standards, there is no tradeoff of potentially adverse impacts in these areas against the negative result on air quality that would be inherent with not setting standards.

7.9 REFERENCES

1. Strelow, Roger. Policy Statement on the Use of the Concept of Photochemical Reactivity of Organic Compounds and State Implementation Plans for Oxidant Control. Federal Register. 41(25):5350. February 5, 1976.

2. U.S. Environmental Protection Agency. Code of Federal Regulations. Title 40, Chapter 1, Part 51, Appendix B. Washington, DC. Office of the Federal Register. July 1979. p. 107.

3. CENTEC Corporation. Draft-Contractor Report for Development of Effluent Limitations Guidelines for Paint Application Processes Used in the Mechanical and Electrical Process Industries. (Prepared for U.S. Environmental Protection Agency.) EPA Contract Number 68-02-2581. July 1979.

4. Statistical Review. Appliance. 37(4). April 1980.

5. Owens, D. L., and Stephens, J. 1980-1990: A Promising Transition. Appliance. 37(1). January 1980.

6. Memo from Daum, K. A., Research Triangle Institute, to Docket. April 13, 1979. Meeting with Glidden Coatings and Resins Company, Strongsville, Ohio.

7. Letter from Goodgame, T. H., Whirlpool Corporation, to Johnson, W. L., Chemicals and Petroleum Branch, U.S. Environmental Protection Agency, February 22, 1980. New Source Performance Standards.

8. U.S. Environmental Protection Agency. Code of Federal Regulations. Title 40, Chapter I, Part 261.3. Washington, DC. Office of the Federal Register. July 16, 1980.

9. U.S. Environmental Protection Agency. Code of Federal Regulations. Title 40, Chapter I, Part 262. Washington, DC. Office of the Federal Register. November 19, 1980.

8. ECONOMIC IMPACT

8.1 INDUSTRY CHARACTERIZATION

8.1.1 General Profile

In 1978 a total of 95 companies, operating 171 facilities, engaged in the production of large appliances. Although plants are widely dispersed throughout 29 States, industry production is concentrated in the Midwestern and Midsouthern States. Key producing States include Ohio, Illinois, Indiana, Michigan, Minnesota, Kentucky, and Tennessee.[1] On an EPA regional basis, Region V contains 37 percent of total establishments and Region IV, 22 percent.

Horizontal integration, or production of more than one type of appliance, is a distinctive feature of the large appliance industry, and market segmentation is evident. The large appliance industry is currently dominated by three manufacturers, the combined sales of which accounted for 65 percent of total sales in 1978. Each company produces three or four product lines of most, if not all, Standard Industrial Classification (SIC) categories of products. Competition among the dominant manufacturers is strong because each emphasizes the production of traditional large appliance products such as washing machines and dryers, cooking equipment, and refrigerators. The numerous smaller companies may experience limited competition in this field, but most tend to specialize in the production of a certain type or class of appliance, such as trash compactors, dishwashers, gas ranges, or water heaters. However, the vast majority of manufacturers, both large and small, produce only large appliance items.[1]

The lack of genuine product differentiation in the eyes of the consumer makes competitive pricing a major determinant in market success and a significant characteristic of the large appliance industry. Efficient, high-volume production techniques are necessary to achieve and maintain competitive pricing. Through mass production, economies of scale are

achieved, lowering the unit cost. Although aggressive competitive pricing has enabled the industry to maintain product prices with only minimal price increases, however, it has also resulted in numerous small companies closing in recent years because of their inability to compete effectively in the market. New companies are also discouraged from entering the market, and their number is declining each year.[2]

Aggressive competitive pricing within the industry is evidenced by the minimal price increases for large appliance products. The Consumer Price Index of 114.4 for appliances in December 1975 can be compared to an index of 193.4 for all manufacturing industries, when measured against the 1957 to 1959 base of 100. The Consumer Price Index for selected large appliances from 1957 through 1977 is indicated in Table 8-1; the wholesale price index is listed in Table 8-2. Specifically, the typical midrange refrigerator that retailed at $299 from 1952 through 1967 currently retails at approximately $350. The average washing machine that sold for $279.95 through 1967 retails at slightly over $300 in 1979. Again, a midrange dishwasher that retailed at $289.95 in 1967 now retails at approximately $300.[3] Although inflationary pressures are expected to result in industry-wide increases during the next few years, industry analysts believe price increases will remain minimal.[4]

The industry in this country is dominated by three diversified manufacturers: General Electric Company (GE), Whirlpool, and White Consolidated Industries (WCI). The latter currently markets appliances under such trade names as Kelvinator, Westinghouse, and Gibson. Table 8-3, based on information from 171 facilities with employment of 20 or more persons and annual net income over $100,000, lists the 12 leading manufacturers of large appliances. Annual sales, market share, and branch plants or subsidiary companies are also indicated for each SIC category of products.

GE is the primary manufacturer of large appliances. In sales, over 25 percent of the electric and gas ranges (SIC 3631); 29.2 percent of the refrigerators and freezers (SIC 3632); 32.7 percent of the washers and dryers (SIC 3633); and 19.2 percent of the dishwashers, trash compactors, and other products included in SIC 3639 are GE products.[1] One of the chief reasons GE dominates the large appliance industry is that approximately 35 percent of its products are purchased directly by the construction

TABLE 8-1. CONSUMER PRICE INDEXES, ANNUAL AVERAGE[5]
(1957-1959 = 100)

Year	All items	Appliances	Automatic washers	Refrigerators	Fre star ran
1957	98.0	101.1	101.4	102.4	10(
1958	100.7	99.4	100.3	98.9	9(
1959	101.5	99.5	98.4	98.6	9(
1960	103.1	98.8	95.9	96.6	9(
1961	104.2	96.5	93.0	95.3	9(
1962	105.4	93.5	90.5	93.0	9(
1963	106.7	91.5	89.2	90.6	9(
1964	108.1	90.0	88.0	88.8	9(
1965	109.9	87.1	86.8	86.2	9(
1966	113.1	84.4	86.3	82.9	9(
1967	116.3	83.8	86.6	82.7	9(
1968	121.2	88.7	88.8	83.8	9(
1969	127.7	90.6	90.6	85.3	9(
1970	135.3	92.9	92.9	87.5	10(
1971	141.0	94.8	94.7	89.4	10(
1972	145.7	95.3	95.7	89.4	10(
1973	154.7	95.4	96.1	89.6	10(
1974	171.8	100.5	101.4	94.8	10(
1975	187.5	111.3	114.2	106.4	12(
1976	198.3	117.6	122.1	111.5	12(
1977	211.1	121.8	126.0	115.5	13(
June 1978	226.9	126.4	130.5	120.8	13(

TABLE 8-2. WHOLESALE PRICE INDEX, ANNUAL AVERAGE[5]
(1957-1959 = 100)

Year	Major appliances	Cooking ranges	Laundry equipment	Refrigeration equipment	Undercounter dishwashers	Food waste disposers
1957	100.8	98.8	100.2	102.3		
1958	99.9	100.2	100.1	99.6		
1959	99.3	101.0	99.6	98.1		
1960	96.0	100.0	98.1	91.6		
1961	93.5	99.6	97.1	86.8		
1962	92.0	99.9	95.6	84.7		
1963	90.3	100.4	94.5	81.6		
1964	89.7	101.1	94.3	79.9		
1965	87.9	100.6	92.2	78.0		
1966	87.8	101.0	92.2	77.6		
1967	88.9	102.9	93.4	78.4	100.7	100.0
1968	90.8	104.5	95.6	80.8	98.4	98.8
1969	92.0	105.9	97.1	82.1	100.0	100.7
1970	94.5	110.7	99.1	83.5	100.9	103.5
1971	96.3	114.7	100.0	84.9	104.2	102.3
1972	96.3	116.4	100.5	83.8	102.7	105.3
1973	96.8	119.5	101.2	83.3	104.7	103.2
1974	104.7	129.4	110.5	89.5	110.6	108.6
1975	118.9	146.1	124.6	102.6	125.0	122.9
1976	126.0	154.2	135.2	107.6	129.7	128.9
1977	131.4	163.6	140.3	111.7	136.3	132.5

TABLE 8-3. LEADING MANUFACTURERS OF LARGE APPLIANCES: 1978[1]

Parent company/ address	Branch plant location or subsidiary name/location	SIC 3631[a]		SIC 3632[a]		SIC 3633[a]		SIC 3639[a]	
		% market share	Annual sales ($ millions)	% market share	Annual sales ($ millions)	% market share	Annual sales ($ millions)	% market share	Annual sales ($ millions)
1. General Electric Fairfield, CT	Milwaukee, WI Columbia, MD Cicero, IL Louisville, KY Decatur, AL Bloomington, IN Chicago, IL	23.8	369.0	29.2	739.5	32.7	447.0	19.2	193.9
2. Whirlpool, Inc. Benton Harbor, MI	St. Joseph, MI Marion, OH Evansville, IN St. Paul, MN Ft. Smith, AR Clyde, OH Danville, KY Findlay, OH Lewisburg, TN	2.9	30.5	25.1	658.7	31.8	449.4	2.9	29.9
3. White Consolidated Industries Cleveland, OH	Columbus, OH Athens Stove Works, Inc. Athens, TN White-Westinghouse Mansfield, OH Kelvinator, Inc. Cleveland, OH Grand Rapids, MI Franklin Mfg. Company Benton, MI Webster City, IA Gibson Appliances Greenville, MI	5.0	78.7	12.8	326.2	7.9	116.3	-	-
4. Magic-Chef Cleveland, TN	Anniston, AL	8.5	132.3	-	-	-	-	-	-
5. Tappan Mansfield, OH	Springfield, TN Cleveland, TN Murray, KY O'Keefe and Merritt Mansfield, OH Whirl-A-Way/Anaheim Anaheim, CA Mansfield, OH	7.4	115.1	-	-	-	-	-	-

(continued)

TABLE 8-3 (continued)

Parent company/ address	Branch plant location or subsidiary name/location	SIC 3631[a]		SIC 3632[a]		SIC 3633[a]		SIC 3639[a]	
		% market share	Annual sales ($ millions)	% market share	Annual sales ($ millions)	% market share	Annual sales ($ millions)	% market share	Annual sales ($ millions)
6. Litton Ind. Beverly Hills, CA	Sioux Falls, SD Plymouth, MN	6.7	103.3	-	-	-	-	-	-
7. General Motors New York, NY	Frigidaire-Oven Division Dayton, OH Cincinnati, OH	6.6	102.3	7.0	178.9	2.9	42.2	-	-
8. Raytheon Lexington, MA	Glenwood Range Co., Inc. Delaware, OH Taunton, MA Caloric Corporation Wyncote, PA Topton, PA Amana Refrigeration Amana, IA	5.1	80.6	6.1	154.3	-	-	-	-
9. Maytag Newton, IA	Newton, IA Hampton, IA	-	-	-	-	17.1	250	-	-
10. A. O. Smith Milwaukee, WI	Kankakee, IL Newark, CA	-	-	-	-	-	-	8.5	85.8
11. Mor-Flo, Inc. Cleveland, OH	Johnson City, TN Cleveland, OH	-	-	-	-	-	-	7.9	79.7
12. Design and Mfg. Connersville, IN	Connersville, IN	-	-	-	-	-	-	7.7	78.2

[a]SIC 3631: Electric and Gas Ranges
SIC 3632: Refrigerators and Freezers
SIC 3633: Washers and Dryers
SIC 3639: Dishwashers, Trash Compactors, and Water Heaters

industry for use in new homes and apartments, rather than by retail distributors.

Second only to GE in appliance sales, Whirlpool specializes in producing refrigerators and freezers (SIC 3632) and washers and dryers (SIC 3633). During 1978, Whirlpool accounted for 25.1 percent of all washer and dryer sales and 31.8 percent of the refrigerator and freezer sales. Whirlpool, under the Kenmore brand, is the sole supplier of refrigerators, washers, and dryers to Sears Roebuck and Company. This customer accounts for approximately two-thirds of Whirlpool's annual sales.[6]

Rivaling Whirlpool in large appliance sales is WCI. Although WCI's market shares are currently smaller than those of Whirlpool--5 percent of electric and gas ranges (SIC 3631), 12.8 percent of refrigerators and freezers (SIC 3632), and 7.9 percent of washers and dryers (SIC 3633)--the recent acquisition of General Motors' Frigidaire line will provide WCI with approximately one-quarter of the large appliance market.[6] The acquisition program initiated by WCI is further discussed in Section 8.1.2 of this chapter.

Large appliance plants vary widely in both size and age. According to an industry analyst, the newest major facility was constructed in 1962. Most plants producing traditional large appliance products such as refrigerators and washing machines are approximately 40 to 45 years old. Smaller plants manufacturing more modern products such as trash compactors or microwave ovens may be, on the average, about 20 years old. However, nearly all plants undergo retooling every 5 to 7 years and line modifications about every 10 to 15 years.[7]

The sizes of large appliance plants as measured by annual production depend significantly upon the product manufactured. Thus, the estimated median sizes of facilities producing large appliances in 1978 were: 44,000, 56,000, 231,000, and 67,000 units per year for SIC categories 3631, 3632, 3633, and 3639, respectively.

Large appliance manufacturing facilities also vary in number of employees. In 1978, plants engaged in the production of household cooking equipment (SIC 3631) employed about 250 persons, as did plants manufacturing refrigerators and freezers (SIC 3632). However, household laundry equipment establishments (SIC 3633) employed 500 to 1,000 persons, while

plants engaged in the production of large appliances included in SIC category 3639 employed about 100 persons. Size distribution of large appliance manufacturing facilities in terms of the number of employees is shown in Figure 8-1.

Although employment varies within the industry, the number of employee shifts is fairly constant, at around one shift, assuming 2,000 hours per worker-year. Total employment in the large appliance industry peaked in 1973 at slightly over 1 million persons and although total employment dropped sharply in 1975, it has since increased to prerecession levels.[8]

During 1977, the total value of shipments for all SIC categories of products was $6,322 million, a 150-percent increase in current dollars over the value of 1967 shipments. The value of household cooking equipment shipments (SIC 3631) totaled $1,515 million during 1977. The value of parts and accessories ($49.5 million) is included in this figure. The value of shipments of household refrigerators and freezers (SIC 3632) reached $1,933 million, while industry shipments of washing machines and dryers (SIC 3633) were valued at $1,450 million in 1977. The value of shipments for those products included in SIC 3639 totaled $1,074 million. Because the production of parts and accessories for SIC categories 3632, 3633, and 3639 is relatively minor, their value of shipments is included in the total figures for each category. Table 8-4 indicates the value of annual shipments for each SIC category, by product, for the 10-year period 1967 through 1977.

Factory unit shipments of large appliances totaled 32,618,900 in 1977, compared to 32,265,100 in 1972. The term "factory shipment" means physical shipments of large appliances from domestic establishments. The definition includes the quantity of all products sold, transferred to other plants, or shipped on consignment. Table 8-5 indicates annual production for each SIC category of large appliances over the 1967 to 1977 period, including annual production by product. As reflected in Table 8-5, the industry experienced a significant decline in production in 1974 and 1975 but had made a full recovery by 1977. An increase in 1979 product shipments is anticipated because of several factors, including an estimated increase in disposable personal income and increased housing starts. The appliance production index is expected to remain at approximately its mid-1978 level of 166

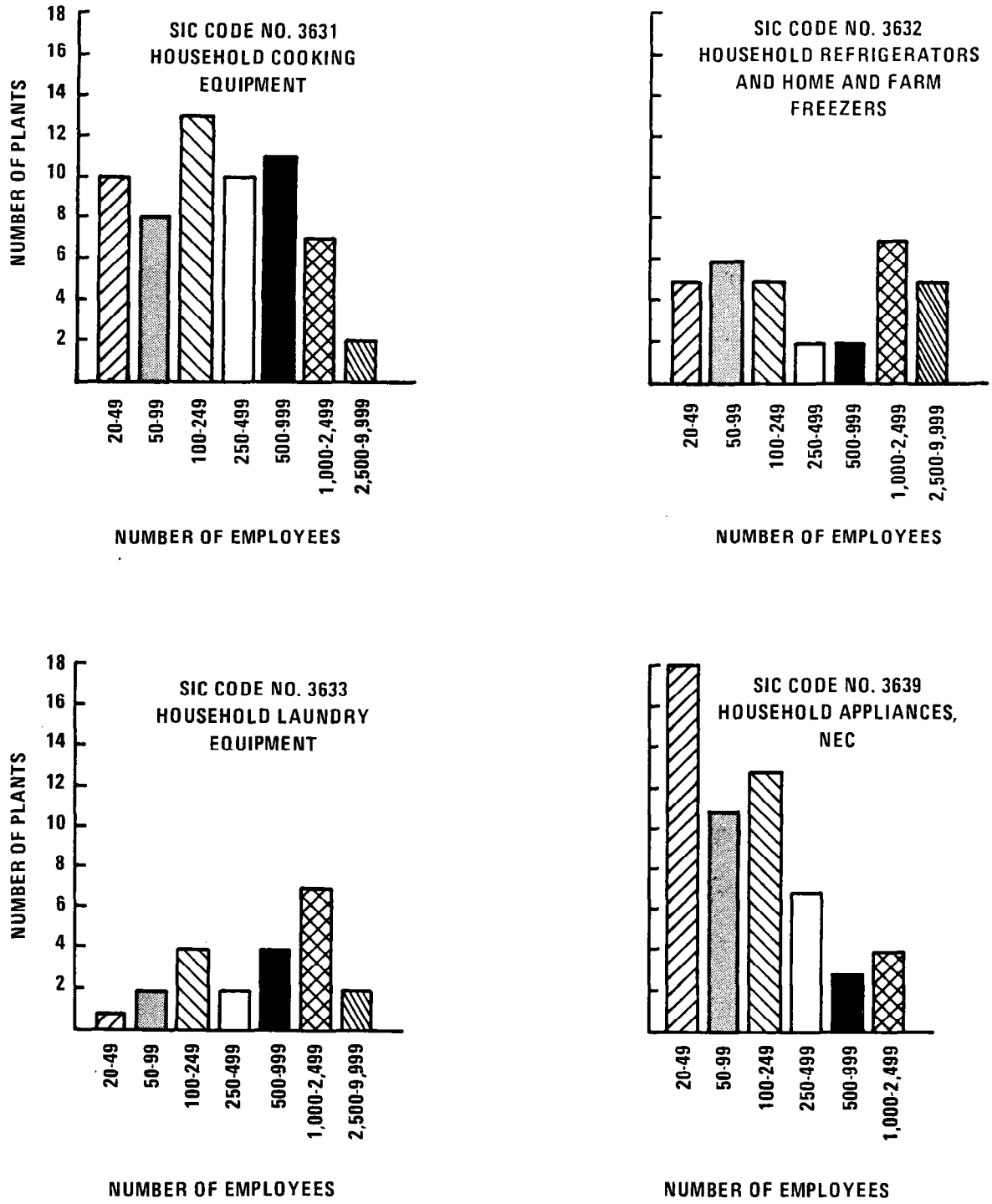

Figure 8-1. Size distribution of large appliance manufacturing plants according to employment: 1978.[1]

TABLE 8-4. VALUES OF ANNUAL SHIPMENTS OF LARGE APPLIANCES BY PRODUCT: 1967-1977[2]
(In $ Millions)

SIC code	No. of reporting companies (1977)	1967	1968	1969	1970	1971	1972	1973	1974	1975	1976	1977
3631:												
Electric ranges[a]	30	331.9	388.3	391.1	399.5	447.0	548.2	666.7	705.8	673.4	985.0	1,151.0
Gas ranges	24	220.0	247.2	287.9	281.8	335.9	331.1	303.7	266.3	344.0	354.1	364.5
Total[b]		551.9	635.5	679.0	681.3	782.9	879.3	970.4	972.1	1,017.4	1,339.1	1,515.5
3632:												
Refrigerators[c]	21	833.1	944.3	959.2	995.4	1,042.3	1,200.2	1,275.4	1,249.2	1,120.4	1,288.9	1,639.3
Food freezers	12	141.2	147.5	161.2	182.4	178.0	193.1	309.4	466.7	463.8	260.8	294.1
Total		974.3	1,091.8	1,120.4	1,177.8	1,220.3	1,393.3	1,584.8	1,715.9	1,584.2	1,549.7	1,933.4
3633:[d]												
Washers	12	583.7	613.1	610.3	573.2	617.1	712.3	778.6	743.3	708.4	807.5	940.2
Dryers	12	259.4	297.1	308.5	324.8	347.6	405.3	444.1	399.0	352.3	432.6	509.6
Total		842.1	910.2	918.8	898.0	964.7	1,117.6	1,222.7	1,142.3	1,060.7	1,240.1	1,449.8
3639:												
Electric water heaters	11	60.5	78.5	77.3	90.1	103.5	119.0	139.3	147.2	148.8	172.4	217.0
Gas water heaters	16	N/A	N/A	N/A	N/A	N/A	171.3	163.5	172.0	202.6	239.3	277.3
Dishwashers	18	199.1	240.5	264.3	257.3	292.6	426.6	435.1	423.3	377.3	486.9	539.9
Trash compactors	8	N/A	N/A	N/A	N/A	N/A	N/A	54.9	57.8	30.8	35.7	40.1
Total								792.8	800.3	759.5	934.3	1,074.3

[a]Includes microwave.

[b]Total includes only those large appliance values given here (not for entire SIC category).

[c]Includes refrigerator-freezers.

[d]Due to SIC definition change, washer-dryer combination data included in washer figures from 1967-1969 but included in dryer figures afterwards.

N/A = not available.

TABLE 8-5. ANNUAL PRODUCTION BY PRODUCT: 1967-1977[2 9]
(In 1,000 Units)

SIC code	No. of reporting companies (1977)	1967	1968	1969	1970	1971	1972	1973	1974	1975	1976	1977
3631:												
Electric ranges	30	2,273.1	2,693.1	2,687.2	2,675.7	3,096.0	4,088.8	4,289.8	3,888.8	3,254.1	4,414.6	4,822.0
Gas ranges[a]	24	2,123.0	2,285.9	2,471.1	2,361.7	2,549.3	2,661.1	2,481.4	1,950.1	1,618.4	1,823.5	1,745.5
Total		4,396.1	4,979.0	5,158.3	5,037.4	5,645.3	6,749.9	6,771.2	5,838.9	4,872.5	6,238.1	6,567.5
3632:												
Refrigerators	21	4,779.5	5,141.3	5,279.8	5,259.4	5,543.7	6,068.5	6,527.3	5,702.2	4,552.5	4,911.3	5,673.6
Freezers	12	1,039.4	1,064.0	1,164.2	1,304.5	1,240.8	1,355.4	2,286.7	3,046.8	2,644.5	1,482.3	1,547.9
Total		5,818.9	6,205.3	6,444.0	6,563.9	6,784.5	7,423.9	8,814.0	8,749.0	7,197.0	6,393.6	7,221.5
3633:												
Washers[a]		4,595.7	4,703.2	4,595.1	4,270.5	4,559.3	5,143.4	5,436.4	4,894.4	4,123.1	4,509.9	4,971.6
Dryers	12	2,676.8	2,986.9	3,089.5	3,167.0	3,370.3	3,919.3	4,225.4	3,532.8	2,753.4	3,197.2	3,588.5
Total		7,272.5	7,690.1	7,684.6	7,437.5	7,929.6	9,062.7	9,661.8	8,427.2	6,876.5	7,707.1	8,560.1
3639:												
Electric water heaters	11	1,398.5	1,925.2	1,924.1	1,995.3	2,210.8	2,534.6	2,806.6	2,569.4	2,246.7	2,574.0	3,079.3
Gas water heaters[a]	16	2,630.1	2,756.3	2,742.4	2,785.2	3,088.4	3,162.8	3,080.4	3,011.3	3,260.2	3,339.7	3,528.5
Dishwashers	18	1,581.0	1,856.5	1,998.7	1,971.9	2,269.3	2,922.3	3,439.0	3,102.4	2,463.3	3,075.2	3,243.4
Trash compactors	8	N/A	N/A	N/A	N/A	N/A	N/A	455.2	474.5	224.4	252.6	262.7
Total								9,781.2	9,157.6	8,194.6	9,241.5	10,113.9

[a]Due to change in SIC definition, data regarding production of washer-dryer combinations are included in figures for washer production from 1967 to 1969. From 1970 on, figures are included in data for dryer production.

N/A = not available.

through 1979. The index of household appliance production, as reported by the Federal Reserve Board, was at 128.4 (1967 = 100) in 1976. In 1977, the index rose to 146.4, and by April 1978 it had risen to 168.6, approximately the same level as during the peak production year of 1973. However, by mid-1978 the appliance index dropped slightly to 166, compared to 144.6 for all industrial production.[10]

For the fourth quarter of 1977, it is estimated that American industry as a whole operated at 76 percent of its practical capacity, or about 2 percent above the corresponding quarter in 1976. Practical capacity means the greatest level of output the plant could achieve within a realistic work pattern. A preferred level of operations means an intermediate level of operations between actual operations and practical capacity that the manufacturer would prefer not to exceed because of economic or other considerations.[11]

During 1977, the large appliance industry operated at an average of 69 percent capacity, compared to 71 percent for the appliance industry as a whole. Manufacturers of household cooking equipment (SIC 3631) operated at 75 percent of capacity, while manufacturers of household refrigerators and freezers (SIC 3632) operated at 57 percent of capacity. Household laundry equipment manufacturers operated at 66 percent of capacity, and facilities engaged in the production of water heaters, dishwashers, and trash compactors (SIC 3639) operated at 79 percent of capacity. Table 8-6 shows the production capacity for 1976 and 1977 implied by the capacity utilization data and the production data for each SIC category of products.

The domestic market for large appliance products is mainly comprised of retail chain stores and the construction industry. Distribution is usually accomplished through large franchise or dealership networks. As much as one-third of all major appliances are sold through retail chain stores and private labels, representing a significant increase over the past two decades. Substitutes for large appliances, including restaurants, laundromats, and dry cleaners, have little or no effect on sales. Once

TABLE 8-6. ANNUAL PRODUCTION, CAPACITY UTILIZATION, AND IMPLIED PRODUCTION CAPACITY, BY SIC, OF THE LARGE APPLIANCE INDUSTRY: 1976 and 1977[2 11]

	1976 annual production (000)	1976 capacity utilization (%)	1976 implied production capacity (000)	1977 annual production (000)	1977 capacity utilization (%)	1977 implied production capacity (000)
3631	6,454.9	65	9,900	6,723.4	75	8,900
3632	6,393.6	51	12,500	7,221.5	57	12,600
3633	7,707.1	62	12,400	8,560.1	66	12,900
3639	9,241.5	64	14,400	10,113.9	79	12,800
Total	29,797.1	60[a]	49,200	32,618.9	69[a]	47,200

[a]Average.

have been unable to convince consumers to trade in large appliances after a few years for a more fashionable model.[12] In addition, appliances such as refrigerators and washing machines have penetrated the 1977 domestic market by as much as 99.9 percent and 73.3 percent, respectively.[13] The degree of market saturation for certain large appliance products during 1976 and 1977 is indicated in Table 8-7. As domestic market penetration by large appliances increases, manufacturers increasingly rely on foreign trade.

Total foreign trade in large appliances reached $1,213 million in 1976. Exports accounted for $542 million and imports, $671 million. Large appliance exports are estimated to have increased 10 percent in 1978, reaching a total of $660 million. Canada remains the most important customer, buying 40 percent of all U.S. exports in 1977 from all SIC categories of large appliance products. However, Venezuela, Saudi Arabia, Kuwait, and West Germany are all steadily increasing in significance as consumers of exported appliance products.[14] The amount of U.S. exports of large appliances during 1975 and 1976 is indicated in Table 8-8, together with the applicable percent change per year.

Although the export market is significant, imports still exceed exports. Refrigerators are a significant large appliance import, accounting for 16 percent of total appliance imports in 1978. These compact refrigerators, mainly for recreational use, have placed Sweden in second place to Japan as a foreign source of appliances. Small appliances imported from Japan account for a vast majority of total appliance imports. However, Japanese exports of low-priced microwave ovens accounted for 37 percent of that country's exports to the United States during 1977, at an estimated value of $103 million.[10]

8.1.2 Historical Trends

The most prevalent trend emerging over the past 10 years is the growth program implemented by certain major manufacturers and its subsequent effect on industry structure. Although new construction has not been evident, several major manufacturers have initiated intensive expansion programs both through acquisition and addition to existing facilities. Such efforts have elevated a number of companies to top competitive positions within the industry, rivaling the traditional dominance of GE and Whirlpool.

TABLE 8-7. PERCENT OF MARKET PENETRATION OF SELECTED LARGE APPLIANCES: 1976 and 1977[13]

Production	% market penetration 1976	1977
Refrigerators	99.8	99.9
Washing machines	72.5	73.3
Electric ranges	70.1	71.9
Electric dryers	58.6	N/A
Dishwashers	39.6	40.9
Freezers	44.4	44.8
Electric water heaters	41.7	N/A
Microwave ovens	N/A	N/A

N/A = not available.

TABLE 8-8. U.S EXPORTS OF LARGE APPLIANCES: 1975-1976[15]
(In No. of Units)

Item	1975	1976	Percent change
Refrigerators	226,877	266,699	+17.6
Freezers	30,452	36,395	+19.5
Washing machines	121,211	121,626	+0.3
Electric dryers	65,330	71,303	+9.1
Gas dryers	4,039	5,085	+25.9
Electric ranges	43,051	63,142	+46.7
Gas ranges	81,712	87,002	+6.5
Microwave ovens	31,139	76,642	+146.1
Dishwashers	179,253	241,321	+36.9

A total of seven acquisitions in the past 12 years by White Consolidated Industries (WCI) has transformed that company to a full-line manufacturer, third only to GE and Whirlpool in sales. Annual proceeds by WCI are expected to top $1.7 billion in 1979, with 75 percent of the company committed to the manufacture of large appliances. WCI acquisitions include Gibson Refrigerators (Hupp Corp.), Franklin Appliances (Studebaker), Kelvinator (American Motors), Philco (Ford), Athens Stove Works, and the Westinghouse appliance line, in addition to a Bendix plant for the manufacture of cooling compressors. The recent, highly publicized acquisition of General Motor's Frigidaire division is estimated to boost WCI's market share to approximately one-fourth of the total market, equal to that of Whirlpool. Total market shares of electric range production could be boosted to 18 percent. It is estimated that WCI's market share of electric dryer, gas dryer, and washing machine sales would increase to 15 percent, 14 percent, and 14 percent, respectively. In addition, White Consolidated plans to modify existing WCI plants to manufacture the Frigidaire line.[12]

Through application of effective management techniques and aggressive cost-cutting policies, WCI has transformed each company into a highly productive unit without large capital investment or application of new technology. Industry analysts predict that WCI will emerge from any recession as an even stronger competitor within the industry.[12]

Magic Chef, which has doubled its size in the past 10 years, has also manifested growth through acquisition. Acquisitions such as the Admiral Refrigerator Division of Rockwell International and a Fedders-Norge subsidiary for manufacturing washers and dryers have raised Magic Chef to a full-line top competitor. The company has also become a competitive force in the private label business, traditionally dominated by Whirlpool and GE, because of its position as a major supplier to Mobil's Montgomery Ward retail chain.[16]

The expansion of Maytag's Newton, Iowa, facility was part of a $50 million expansion program expected to increase Maytag's production capacity 75 percent by the early 1980's. The new addition was designed for the electrocoating, top coating, and powder coating of automatic dryer parts. The line features a memory chain that governs painting, positioning, color changes, purges, line stoppage, and automatic blowoff.[17]

The Amana refrigeration plant in Amana, Iowa, expanded recently. In addition, Amana acquired a manufacturing plant in 1977 in Fayetteville, Tennessee, for the manufacture of electric ranges. However, little information is available to determine the overall effect on current market shares and sales.[18]

Annual growth of the large appliance industry has been minimal during the past decade. The industry only returned to prerecession production levels in 1978. Neither plant sizes nor geographical concentration has been affected. The percent per year production change from 1968 through 1977 is indicated in Table 8-9.

8.1.3 Future Trends

Economists predict that although growth through the next 5 years will probably be dampened somewhat by inflation, the large appliance industry will continue to experience steady, if minimal, overall growth. Real shipments of household appliances are expected to increase at an average annual rate of about 2.6 percent over the 5-year period from 1979 through 1983.[4] Washer and dryer production is expected to increase to 6 and 4 million units, respectively, by 1982, as compared to 5 million washers and 3.7 million dryers produced in 1978. The production of household cooking equipment, water heaters, and refrigerators, will increase only slightly. A 5-year forecast for selected large appliance products is provided in Table 8-10.

Such large appliance items as dishwashers, trash compactors, and microwave ovens are far from the market saturation point, and manufacturers are preparing to raise production in this area. In 1977, shipments totaled 1.6 million units, a 73-percent increase over 1975 production. Competition with Japanese imports of microwave ovens is expected to continue. However, industry analysts believe domestic industry will soon be able to offer consumers comparably priced products. Trade agreements are also expected to restrict Japanese imports in this area.[19]

Little or no new plant construction is expected in the next 5 years. As in previous years, industry growth is expected to be confined to major manufacturers. Retooling and line alterations will probably continue as the focus of industry growth. The acquisition trend is also expected to continue as small manufacturers, unable to compete with mass producers, become prime candidates for acquisition.

TABLE 8-9. PERCENT PER YEAR PRODUCTION CHANGE IN LARGE APPLIANCE MANUFACTURING: 1968-1977

SIC code	1968	1969	1970	1971	1972	1973	1974	1975
3631	13.3	3.6	-2.3	12.0	22.7	-1.5	-15.7	-28.7
3632	6.6	3.7	1.9	3.4	9.4	18.7	-0.7	-17.8
3633	5.7	-0.1	-3.2	6.6	14.3	6.6	-12.8	-18.4
3639	19.3	1.9	1.3	12.1	16.9	11.2	6.9	-10.5

TABLE 8-10. FIVE-YEAR FORECAST FOR SELECTED APPLIANCES[3]
(Appliance Estimates in Millions of Units)

	1978	1979	1980	1981	1982	1983	% chan
Washers	5.3	5.3	5.5	5.8	5.9	6.0	13.2
Dryers	3.7	3.6	3.8	3.9	4.0	4.2	13.5
Ranges	5.0	4.9	5.1	5.2	5.3	5.4	8.0
Microwave ovens	2.5	2.9	3.5	4.0	4.2	4.4	76.0
Dishwashers	3.5	3.6	3.8	4.0	4.2	4.4	25.7
Refrigerators	6.2	6.1	6.3	6.4	6.5	6.6	6.4
Water heaters, gas	3.0	3.0	3.1	3.1	3.2	3.2	6.6
Water heaters, electric	2.8	2.8	2.9	3.0	3.0	3.1	10.7

Little or no change during the next 5 years is expected in the size of plants or processes. No change in geographic concentration of plants is anticipated. However, new and modified lines will become increasingly more automated. And although large appliance products are not expected to change in basic design or appearance, manufacturers are preparing to add new energy-saving features to all product lines, in addition to electronic controls. Neither trend is expected to affect surface coating processes significantly.

8.2 COST ANALYSIS

8.2.1 Introduction

Costs of the various control options are presented and analyzed in this section. The control options, discussed in Chapter 4, are summarized in Table 8-11, along with the regulatory alternatives to which each applies.

The first regulatory alternative for either prime coat or top coat--not promulgating an NSPS--corresponds to the level of control expected if States implement Control Technologies Guideline (CTG) limits. The emissions estimates for this alternative are based on the application of a coating containing 62 percent (vol.) solids at an assumed transfer efficiency of 60 percent.

The second regulatory alternative for either prime coat or top coat--promulgating an NSPS equivalent to the assumed CTG limit--would have a limited impact on emissions. This alternative specifies a minimum transfer efficiency for coating operations. Specification would permit an equivalence provision to be placed in the standard, allowing tradeoffs between solids content and transfer efficiency. The costs of the control option are based on application of a coating containing 62 percent* solids at a transfer efficiency of 60 percent. Because of the assumed transfer efficiency used to establish the no NSPS baseline, the application systems and hence the capital costs of the first two control options are identical.

The third prime coat regulatory alternative--reducing emissions by 55 percent from the no NSPS alternative--is based on the use of a waterborne coating applied by electrodeposition (EDP). This process is the most effective control option per volume of solids applied for prime coating operations and is gaining wide acceptance in the industry.

---

*All percentages are by volume unless otherwise stated.

TABLE 8-11. REGULATORY ALTERNATIVES AND CONTROL OPTIONS CONSIDERED IN THE ECONOMIC ANALYSIS

Regulatory alternative	Control options
Prime coat	
I. Not promulgating an NSPS	1. Application of a 62% solids coating
II. Promulgating an NSPS equivalent to the assumed CTG limit	2. Application of a 62% solids coating at a transfer efficiency of 60%
III. Reducing emissions by 55[a] percent from the no NSPS alternative	3. Application of a water-borne coating by EDP
Topcoat	
I. Not promulgating an NSPS	1. Application of a 62% solids coating
II. Promulgating an NSPS equivalent to the assumed CTG limit	2. Application of a 62% solids coating at a transfer efficiency of 60%
III. Reducing emissions by 30[a] percent from the no NSPS alternative	3. Application of a 70% solids coating at a transfer efficiency of 60%
	4. Application of a 65.5% solids coating at a transfer efficiency of 60% with thermal incineration of oven exhaust
IV. Eliminating emissions	5. Application of 100% solids coating (powder)

[a]Reduction specified as a percent by weight per volume of solids applied.

The third topcoat regulatory alternative--reducing emissions by 30 percent from the no NSPS baseline--can be met by two separate control options. The first option is the application of a coating containing 70 percent solids at a transfer efficiency of 60 percent. The second option is the application of a coating containing 65.5 percent solids at a transfer efficiency of 60 percent with incineration of the bake oven exhaust. The incinerator is assumed to operate at a 93-percent overall destruction efficiency.

The fourth topcoat regulatory alternative--eliminating VOC emissions--is based on the use of a 100-percent solids coating. The control option considered for this alternative is the use of a powder coating, which is the most effective control technology for topcoat operations.

8.2.2 New Facilities

The costs applicable to new coating lines are summarized in this section. The model plants presented in Chapter 6 form the basis for all cost analyses in this section. Tables 8-12 through 8-15 list additional key parameters for each model plant.

8.2.2.1 Capital Costs. Table 8-16 shows the total installed capital cost for each model plant for each combination of control options. All combinations include the cost of pretreatment. Washers and dryers, which are manufactured in Model plant 3, require a prime coat when coated with powder (Regulatory Alternative B-IV); the other appliances considered do not. The costs of the application systems were taken from vendor estimates of each system.[20 21 22 23] The costs of ancillary equipment were taken from estimates by a manufacturer of complete finishing systems.[24] An itemized breakdown of capital costs for each model plant for each prime coat and topcoat control option is presented in Tables 8-17 through 8-20.

8.2.2.2 Annualized Costs. The annualized costs of the various control options are discussed in this section. Included are the annualized capital costs and the operating costs for energy, manpower, and coatings. The following assumptions were used to develop the annualized costs.

TABLE 8-12. KEY PARAMETERS FOR CONTROL OPTIONS APPLIED TO MODEL PLANT 1[a]

(A) Physical

Regulatory alternative	Area coated (m^2/yr)	Coating used[b]	Cure oven temperature (°C)	Cure oven exhaust (m^3/s @ STP)
A-II	19,500	0.628	164	0.0181
A-III	39,000	0.322	177	0.0199
B-II	31,688	1.71	164	0.0251
B-III (70%)	31,688	1.51	164	0.0251
B-III (65.5%)	31,688	1.61	164	0.0251
B-IV	31,688	1.81	191	0.0201

(B) Labor

Process or regulatory alternative	Hanger	Chemist	Coating preparer	Pretreater	Coater	Floater	Supervisor	Total operators	Total professionals
Pretreatment	1	-	-	1	-	-	-	2	-
A-II	-	1	1	-	1	1	1	3	2
A-III	-	1	-	-	-	1	1	1	2
B-II	1	1	1	-	2	1	1	5	2
B-III	1	1	1	-	2	1	1	5	2
B-IV	1	1	-	-	1	1	1	3	2

NOTE: The entries are shown for comparison and should not be taken to indicate the precision of the data.

[a]Lines: 1, line speed: 0.010 m/s, operating hours: 2,000 hr/yr, and cure oven residence time: 20 min.

[b]m^3 of coating per year for Regulatory Alternatives A-II, B-II, and B-III; m^3 of coating solids per year for Regulatory Alternative A-III; and Mg of powder per year for Regulatory Alternative B-IV.

TABLE 8-13. KEY PARAMETERS FOR CONTROL OPTIONS APPLIED TO MODEL PLANT 2[a]

(A) Physical

Regulatory alternative	Area coated (m^2/yr)	Coating used[b]	Cure oven temperature (°C)	Cure oven exhaust (m^3/s @ STP)
A-II	160,500	5.18	164	0.0759
A-III	321,000	2.66	177	0.0822
B-II	260,812	14.02	164	0.0849
B-III (70%)	260,812	12.42	164	0.0808
B-III (65.5%)	260,812	13.27	164	0.0836
B-IV	260,812	14.86	191	0.0841

(B) Labor

Process or regulatory alternative	Hanger	Chemist	Coating preparer	Pretreater	Coater	Floater	Supervisor	Total operators	Total professionals
Pretreatment	1	-	-	1	-	-	-	2	-
A-II	-	1	1	-	-	1	1	2	2
A-III	-	1	-	-	-	1	1	1	2
B-II	1	1	1	-	2	1	1	5	2
B-III	1	1	1	-	2	1	1	5	2
B-IV	1	1	-	-	2	1	1	4	2

NOTE: The entries are shown for comparison and should not be taken to indicate the precision of the data.

[a]Lines: 1, line speed: 0.061 m/s, operating hours: 2,000 hr/yr, and cure oven residence time: 20 min.

[b]m^3 of coating per year for Regulatory Alternatives A-II, B-II, and B-III; m^3 of coating solids per year for Regulatory Alternative A-III; and Mg of powder per year for Regulatory Alternative B-IV.

TABLE 8-14. KEY PARAMETERS FOR CONTROL OPTIONS APPLIED TO MODEL PLANT 3[a]

(A) Physical

Regulatory alternative	Area coated (m^2/yr)	Coating used[b]	Cure oven temperature (°C)	Cure oven exhaust (m^3/s @ STP)
A-II	4,822,380	194.45	164	0.485
A-III	4,822,380	50.06	177	0.412
B-II	1,616,220	130.34	164	0.416
B-III (70%)	1,616,220	115.44	164	0.379
B-III (65.5%)	1,616,220	123.47	164	0.399
B-IV	1,616,220	92.06	191	0.381

(B) Labor

Process or regulatory alternative	Hanger	Chemist	Coating preparer	Pretreater	Coater	Floater	Supervisor	Total operators	Total professionals
Pretreatment	3	-	-	1	-	-	-	4	-
A-II	-	1	1	-	-	2	2	3	3
A-III	-	2	-	-	-	2	2	2	4
B-II	3	1	1	-	6	2	2	12	3
B-III	3	1	1	-	6	2	2	12	3
B-IV	3	1	-	-	-	2	2	5	3

NOTE: The entries are shown for comparison and should not be taken to indicate the precision of the data.

[a]Lines: 3, line speed: 0.086 m/s, operating hours: 2,000 hr/yr, and cure oven residence time: 20 min.

[b]m^3 of coating per year for Regulatory Alternatives A-II, B-II, and B-III; m^3 of coating solids per year for Regulatory Alternative A-III; and Mg of powder per year for Regulatory Alternative B-IV.

TABLE 8-15. KEY PARAMETERS FOR CONTROL OPTIONS APPLIED TO MODEL PLANT 4[a]

(A) Physical

Regulatory alternative	Area coated (m^2/yr)	Coating used[b]	Cure oven temperature (°C)	Cure oven exhaust (m^3/s @ STP)
A-II	2,744,000	88.52	164	0.290
A-III	5,488,000	45.58	177	0.302
B-II	2,744,000	147.53	164	0.347
B-III (70%)	2,744,000	130.67	164	0.304
B-III (65.5%)	2,744,000	139.64	164	0.325
B-IV	2,744,000	156.30	191	0.327

(B) Labor

Process or regulatory alternative	Hanger	Chemist	Coating preparer	Pretreater	Coater	Floater	Supervisor	Total operators	Total professionals
Pretreatment	2	-	-	1	-	-	-	3	-
A-II	-	1	1	-	-	1	1	2	2
A-III	-	1	-	-	-	1	1	1	2
B-II	2	1	1	-	6	1	1	10	2
B-III	2	1	1	-	6	1	1	10	2
B-IV	2	1	-	-	-	1	1	3	2

NOTE: The entries are shown for comparison and should not be taken to indicate the precision of the data.

[a]Lines: 2, line speed: 0.081 m/s, operating hours: 2,000 hr/yr, and cure oven residence time: 20 min.

[b]m^3 of coating per year for Regulatory Alternatives A-II, B-II, and B-III; m^3 of coating solids per year for Regulatory Alternative A-III; and Mg of powder per year for Regulatory Alternative B-IV.

TABLE 8-16. CAPITAL COSTS OF CONTROL OPTIONS APPLIED TO MODEL PLANTS
($ Thousands)

Regulatory alternatives	Model plant 1	2	3	4
A-II, B-II	427	1,010	2,950	2,360
A-II, B-III (70%)	427	1,010	2,950	2,360
A-II, B-III (65.5%)	476	1,060	3,100	2,510
A-II, B-IV			2,950	
A-III, B-II	426	1,120	3,050	2,530
A-III, B-III (70%)	426	1,120	3,050	2,530
A-III, B-III (65.5%)	475	1,170	3,200	2,680
A-III, B-IV			3,050	
B-IV	362	538		1,570

TABLE 8-17. ITEMIZED INSTALLED CAPITAL COSTS FOR CONTROL OPTIONS APPLIED TO MODEL PLANT 1
($ Thousands)

Component	Regulatory alternatives					
	A-II	A-III	B-II	B-III (70%)	B-III (65.5%)	B-IV
Washer(s)	77	77				77
Dryoff oven	42					42
Manual electrostatic gun(s)	5		8	8	8	
Feed system	20		20	20	20	
EDP application system		85				
Powder application and recovery system						160
Water wash booths	20		20	20	20	
Dry touchup booth(s)			5	5	5	
Bake oven	50	50	50	50	50	50
Conveyor system	29	29	29	29	29	29
Air makeup system	22	22	22	22	22	
Incinerator					49	
Erection supervision	4	5	4	4	4	4
Total	269	268	158	158	207	362

TABLE 8-18. ITEMIZED INSTALLED CAPITAL COSTS FOR CONTROL OPTIONS APPLIED TO MODEL PLANT 2
($ Thousands)

Component	Regulatory alternatives					
	A-II	A-III	B-II	B-III (70%)	B-III (65.5%)	B-IV
Washer	113	113				113
Dryoff oven	70					70
Automatic disks (36" reciprocation)	49		49	49	49	
Manual electrostatic gun			5	5	5	
Memory system	35		35	35	35	
Feed system	60		60	60	60	
EDP application system		350				
Powder application and recovery system						175
Shrouds	28		28	28	28	
Water wash touchup booths			24	24	24	
Bake oven	123	123	123	123	123	123
Conveyor system	52	52	52	52	52	52
Air makeup system	48	48	48	48	48	
Incinerator					56	
Erection supervision	5	5	5	5	5	5
Total	583	691	429	429	486	538

TABLE 8-19. ITEMIZED INSTALLED CAPITAL COSTS FOR CONTROL OPTIONS APPLIED TO MODEL PLANT 3
($ Thousands)

Component	Regulatory alternatives					
	A-II	A-III	B-II	B-III (70%)	B-III (65.5%)	B-IV
Washers	437	437				
Dryoff oven	140					
Automatic disks (36" reciprocation)	148		148	148	148	
Manual electrostatic guns			15	15	15	
Memory system	105		105	105	105	
Feed system	60		60	60	60	
EDP application system		631				
Powder application and recovery system						633
Shrouds	83		83	83	83	
Water wash touchup booths			72	72	72	
Bake oven	382	382	382	382	382	382
Conveyor system	200	200	200	200	200	200
Air makeup system	160	160	160	160	160	
Incinerator					145	
Erection supervision	10	10	10	10	10	10
Total	1,725	1,820	1,235	1,235	1,380	1,225

TABLE 8-20. ITEMIZED INSTALLED CAPITAL COSTS FOR CONTROL OPTIONS APPLIED TO MODEL PLANT 4
($ Thousands)

Component	Regulatory alternatives					
	A-II	A-III	B-II	B-III (70%)	B-III (65.5%)	B-IV
Washers	415	415				415
Dryoff oven	154					154
Automatic disks (72" reciprocation)	102		102	102	102	
Manual electrostatic guns			10	10	10	
Memory system	70		70	70	70	
Feed system	60		60	60	60	
EDP application system		610				
Powder application and recovery system						594
Shrouds	56		56	56	56	
Water wash touchup booths			76	76	76	
Bake oven	266	266	266	266	266	266
Conveyor system	133	133	133	133	133	133
Air makeup system	160	160	160	160	160	
Incinerator					145	
Erection supervision	8	8	8	8	8	8
Total	1,424	1,592	941	941	1,086	1,570

Capital recovery factor

- A 10-year equipment life and a 12-percent interest rate added to a 4-percent allowance for taxes and insurance
- 21.7 percent of installed capital cost

Building rental fee[25]

- $25.00/ft^2-yr of floor space

Labor costs

- $10.00/hr of operating labor
- $12.50/hr of professional and supervisory labor

Energy costs[26]

- $2.84/GJ ($3.00/million Btu) of natural gas

Coating costs

- For high-solids prime coat[27]
  - 62% (vol.) solids: $3,170.00/m^3 ($12.00/gal) of coating
- For high-solids top coat[27]
  - 62% (vol.) solids: $3,381.00/m^3 ($12.80/gal) of coating
  - 65.5% (vol.) solids: $3,566.00/m^3 ($13.50/gal) of coating
  - 70% (vol.) solids: $3,830.00/m^3 ($14.50/gal) of coating
- For EDP[28]
  - $7,601.00/m^3 ($29.00 gal) of solids
- For powder[29]
  - $0.82/kg ($1.80/lb) of powder

Table 8-21 presents the total annualized costs for each model plant for each combination of control options. Tables 8-22 through 8-25 show the itemized operating costs and the annualized costs for each model plant for each prime coat and topcoat control option.

8.2.2.3 Cost Effectiveness. Cost effectiveness is a common measure of the economic efficiency of a pollution control system and may be defined as the annualized cost of removing a unit of pollutant. The concept of cost effectiveness is valuable for comparing various proposed control options for a given industrial source with controls on other industrial sources. It can also serve as a tool in selecting a control option where a decision on the basis of plant affordability is not clear cut.

TABLE 8-21. TOTAL ANNUALIZED COSTS OF CONTROL OPTIONS
($ Thousands/Year)

Regulatory alternatives	Model plant 1	2	3	4
A-II, B-II	507	802	2,910	2,280
A-II, B-III (70%)	507	802	2,910	2,280
A-II, B-III (65.5%)	521	817	2,940	2,310
A-II, B-IV			2,690	
A-III, B-II	467	807	2,700	2,350
A-III, B-III (70%)	467	807	2,700	2,350
A-III, B-III (65.5%)	481	822	2,730	2,390
A-III, B-IV			2,480	
B-IV	296	490		1,510

TABLE 8-22. ANNUALIZED COSTS FOR CONTROL OPTIONS APPLIED TO MODEL PLANT 1
($ Thousands/Year)

Component	Regulatory alternatives					
	A-II[a]	A-III[a]	B-II	B-III (70%)	B-III (65.5%)	B-IV[a]
Annualized capital costs	58.4	58.2	34.3	34.3	44.9	78.6
Building space costs	45.0	45.0	45.0	45.0	45.0	45.0
Direct operating costs						
Labor	150.0	110.0	150.0	150.0	150.0	150.0
Natural gas	15.0	14.5	1.6	1.6	4.7	15.1
Coating	2.0	2.5	5.8	5.8	5.7	7.2
Total annualized costs	270.4	230.2	236.7	236.7	250.3	295.9

[a]Includes pretreatment.

TABLE 8-23. ANNUALIZED COSTS FOR CONTROL OPTIONS APPLIED TO MODEL PLANT 2
($ Thousands/Year)

Component	Regulatory alternatives					
	A-II[a]	A-III[a]	B-II	B-III (70%)	B-III (65.5%)	B-IV[a]
Annualized capital costs	126.1	149.9	93.1	93.1	105.5	116.7
Building space costs	90.0	90.0	90.0	90.0	90.0	90.0
Direct operating costs						
Labor	130.0	110.0	150.0	150.0	150.0	170.0
Natural gas	52.4	50.1	6.1	6.1	8.9	53.9
Coating	16.4	20.4	47.4	47.6	47.3	59.0
Total annualized costs	414.9	420.4	386.8	387.0	401.7	489.6

[a]Includes pretreatment.

TABLE 8-24. ANNUALIZED COSTS FOR CONTROL OPTIONS APPLIED TO MODEL PLANT 3
($ Thousands/Year)

Component	Regulatory alternatives					
	A-II[a]	A-III[a]	B-II	B-III (70%)	B-III (65.5%)	B-IV
Annualized capital costs	373.2	394.9	266.9	266.9	299.5	266.9
Building space costs	210.0	210.0	210.0	210.0	210.0	210.0
Direct operating costs						
Labor	215.0	220.0	315.0	315.0	315.0	175.0
Natural gas	233.5	229.2	26.7	26.6	29.5	28.4
Coating	616.4	383.5	440.7	442.2	440.3	365.3
Total annualized costs	1,648.1	1,437.6	1,259.3	1,260.7	1,294.3	1,045.6

[a]Includes pretreatment.

TABLE 8-25. ANNUALIZED COSTS FOR CONTROL OPTIONS APPLIED TO MODEL PLANT 4
($ Thousands/Year)

Component	Regulatory alternatives					
	A-II[a]	A-III[a]	B-II	B-III (70%)	B-III (65.5%)	B-IV[a]
Annualized capital costs	308.1	345.0	204.0	204.0	235.7	340.9
Building space costs	187.5	187.5	187.5	187.5	187.5	187.5
Direct operating costs						
Labor	150.0	130.0	250.0	250.0	250.0	170.0
Natural gas	186.1	179.5	22.3	22.2	25.1	188.5
Coating	280.6	349.1	498.9	500.5	498.0	620.2
Total annualized costs	1,112.3	1,191.1	1,162.7	1,164.2	1,196.3	1,507.1

[a]Includes pretreatment.

Marginal cost effectiveness is a measure of the economic efficiency of additional increments of control. Because the alternatives under consideration in this study represent different control technologies rather than varying degrees of control within the same technology, the concept of marginal cost effectiveness is not directly applicable here. That is, a plant operator must select a specific control technology and does not have the option of selecting a control system, the efficiency of which depends upon capital and operating costs.

The cost effectiveness of the various control options applied to each of the four model plants is shown in Tables 8-26 through 8-29. Because in most cases the emissions reduction is attributable to a change in coatings technology rather than to a pollution control system, the control costs were difficult to determine. Completion of the analysis depended upon the assumption that the entire difference in annualized plant costs between the control option under consideration and the base case (Regulatory Alternative A-I/B-I) was the cost of the "control system."

The tables reveal that incineration (Regulatory Alternative B-III [65.5 percent]) is relatively cost ineffective. While EDP (Regulatory Alternative A-III) is cost effective for laundry equipment (Model plant 3), it is ineffective in the other sectors. Because of the very small, labor-intensive nature of Model plant 1, practically all options yield a savings by substituting equipment for labor. This anomaly results from the very high labor costs associated with operating the plant 2,000 hours per year to produce only 13,000 units. In actuality, a plant of this size would probably operate fewer hours per year or the labor would not be dedicated solely to the coating operation.

8.2.3 Modified/Reconstructed Facilities

The only modification or reconstruction likely to bear an increased cost because of an NSPS would be increased production through a capital expenditure. An example would be the addition of a new line. Little or no retrofit penalty is expected to result in such a case. The cost would be similar to that for a new line except that the existing ovens, air makeup, and other systems might be able to handle the new capacity and thus would not need to be purchased for the new line.

TABLE 8-26. COST EFFECTIVENESS FOR CONTROL OPTIONS APPLIED TO MODEL PLANT 1

Regulatory alternative	Control cost (savings) above A-II, B-II ($ thousands/yr)	Emission reduction from A-II, B-II (Mg/yr)	Cost (savings) per unit of VOC removal ($ thousands/Mg)
A-III, B-II	(40)	0.021	(1,900)
A-II, B-III (70%)	0	0.169	0
A-II, B-III (65.5%)	14	0.169	83
A-III, B-III (70%)	(40)	0.190	(210)
A-III, B-III (65.5%)	(26)	0.190	(137)
B-IV	(211)	0.768	(275)

TABLE 8-27. COST EFFECTIVENESS FOR CONTROL OPTIONS APPLIED TO MODEL PLANT 2

Regulatory alternative	Control cost (savings) above A-II, B-II ($ thousands/yr)	Emission reduction from A-II, B-II (Mg/yr)	Cost (savings) per unit of VOC removal ($ thousands/Mg)
A-III, B-II	5	0.170	29
A-II, B-III (70%)	0	1.390	0
A-II, B-III (65.5%)	15	1.390	11
A-III, B-III (70%)	5	1.560	3
A-III, B-III (65.5%)	20	1.560	13
B-IV	(312)	6.330	(49)

TABLE 8-28. COST EFFECTIVENESS FOR CONTROL OPTIONS APPLIED TO MODEL PLANT 3

Regulatory alternative	Control cost (savings) above A-II, B-II ($ thousands/yr)	Emission reduction from A-II, B-II (Mg/yr)	Cost (savings) per unit of VOC removal ($ thousands/Mg)
A-II, B-III (70%)	0	12.9	0
A-II, B-III (65.5%)	30	12.9	2.3
A-III, B-II	(210)	35.1	(6.0)
A-II, B-IV	(220)	42.9	(5.1)
A-III, B-III (70%)	(210)	48.0	(4.4)
A-III, B-III (65.5%)	(180)	48.0	(3.8)
A-III, B-IV	(430)	78.1	(5.5)

TABLE 8-29. COST EFFECTIVENESS FOR CONTROL OPTIONS APPLIED TO MODEL PLANT 4

Regulatory alternative	Control cost (savings) above A-II, B-II ($ thousands/yr)	Emission reduction from A-II, B-II (Mg/yr)	Cost (savings) per unit of VOC removal ($ thousands/Mg)
A-III, B-II	70	2.9	24
A-II, B-III (70%)	0	14.7	0
A-II, B-III (65.5%)	30	14.7	2.0
A-III, B-III (70%)	87	17.5	5.0
A-III, B-III (65.5%)	110	17.5	6.3
B-IV	(770)	77.8	(9.9)

8.3 OTHER COST CONSIDERATIONS

The purpose of this section is to summarize, to the extent possible, the cost impact of requirements imposed on the large appliance industry by other environmental regulations. Areas of other major regulations pertinent to the coating processes include water pollution, occupational exposure to toxic substances by employees, and toxic substances control.

8.3.1 The Clean Water Act

The large appliance industry is generally subject to effluent discharge regulations imposed by the Federal Water Pollution Control Act Amendments of 1972,[30] as amended by the Clean Water Act of 1977 ("the Act").[31] Basically, the Act requires that EPA develop effluent limitations both for new and existing facilities that discharge liquid effluent directly into navigable waters. New and existing facilities that discharge to publicly owned treatment works (POTWs) would also be subject to new pretreatment standards. In addition, Section 307(a) of the Act requires that the Administrator promulgate specific effluent guideline limitations for the toxic pollutants listed under Section 307(a)(1) of the Act. This listing includes several of the organic solvents commonly used in the surface coating process.[30]

Estimates of specific compliance costs for Water Act regulations pertaining to the large appliance industry are not available for inclusion in this study. However, preliminary estimates indicate no expectation of plant closures due to the regulations, which are scheduled for proposal in September 1980.[32] New or existing sources that meet, or plan to meet, existing National Pollutant Discharge Elimination System (NPDES) standards would incur only minimal economic impact. However, sources that have not installed direct discharge control systems or pretreatment systems will incur a significant impact for these requirements.[32]

8.3.2 Occupational Exposure

The responsibility of regulating emission levels within the plant working area belongs to the Occupational Safety and Health Administration (OSHA). OSHA is a part of the U.S. Department of Labor, and its responsibilities include final adoption of occupational exposure standards and enforcement of the standards through inspection of work places. NIOSH is an agency of the U.S. Department of Health, Education, and Welfare, and part of its charter is to provide regulation support information to OSHA.

OSHA has worker area standards for nearly 500 chemicals. These standards are similar to the Threshold Limit Values (TLVs) designated by the American Conference of Governmental Industrial Hygienists (ACGIH). The ACGIH defines TLVs as "concentrations of air-borne substances which represent conditions under which it is believed that nearly all workers may be repeatedly exposed day after day without adverse effect . . . . TLVs refer to time-weighted concentrations for a seven or eight hour workday and a forty hour work week." This same definition may be used for OSHA exposure standards. The TLVs for typical organic solvents used in the large appliance coating process are shown in Table 8-30.

Control of organic-solvent concentrations in worker areas is accomplished through containment, isolation, substitution, general ventilation, local exhaust ventilation, changed operating procedures, and administrative control. Many hooding techniques can be used and are discussed in the ACGIH Industrial Ventilation Manual.[33] Around a coating area, a hooding system combined with a containment system can effectively limit levels of organic-solvent exposure to employees. The cost of a hood, ducting, and fan is expected to be a small percent of the total capital cost of a new coating line.

Another emission level constraint affecting the large appliance coater is the lower explosive limit (LEL) of organic solvents. Organic-solvent explosions are not only sources of health and safety concern to the worker, they also are a great concern to insurers of coating equipment. Insurance companies require strict monitoring of organic-solvent levels in equipment areas where such levels might approach the LEL.

The highest organic-solvent levels are found in the drying ovens. Most coating systems are designed to maintain a concentration below 25 percent of the LEL in the ovens. Table 8-30 lists LEL values for organic solvents typically used by the industry. However, meeting the required levels of organic-solvent concentration in this instance is a design concern rather than an added cost of Federal regulation.

8.3.3 Toxic Substances Control

The EPA Office of Toxic Substances has authority under the Toxic Substances Control Act (TSCA)[34] to regulate the manufacture, importation, processing, use, and disposal of substances that present unreasonable risk to

TABLE 8-30. THRESHOLD LIMIT VALUES (TLVs) AND LOWER EXPLOSIVE LIMITS (LELs) OF TYPICAL ADHESIVE AND RELEASE SOLVENTS

Organic solvent	Mg/m^3	ppm	Vol (%)	$lb/10^3ft^3$[a]
Toluene	375	100	1.27	2.37
Xylene	435	100	1.0	2.32
n-Hexane	(1,800)[b]	(500)[b]	1.3	2.75
Cyclohexane	1,100	300	1.31	2.8
Naphtha	NA	NA	0.81	2.16
Methyl acetate	610	200	4.1	7.45
Ethyl acetate	1,400	410	2.2	4.74
n-Butyl acetate	710	150	1.7	4.83
Acetone	2,400	1,000	2.15	3.04
Methyl ethyl ketone (MEK)	590	200	1.81	3.20
Methyl isopropyl ketone	700	200	1.4	3.54
Carbon tetrachloride	65[c]	10[c]	NA	NA
Methanol	260[c]	200[c]	6.0	4.70
Ethanol	1,900	1,000	3.3	3.72

[a]Calculated at 100° F.

[b]In the process of being changed.

[c]Can be potentially absorbed by the body through skin, eyes, or mucous membranes.

NA--not available.

health or the environment. The paint and coating industries are processors of chemicals and could be subject to regulations implementing TSCA.

Several of the organic solvents now widely used throughout the industry are on the EPA Priority List of Toxic Substances. These substances, including toluene, are under testing by the Agency. Accordingly, future regulations may require listing of these solvents. However, the impact of such regulations appears to be small.[35]

8.4 ECONOMIC IMPACT ANALYSIS

The economic impacts of the regulatory control options are presented in this section. The analysis, based on the industry profile and cost data in Sections 8.1, 8.2, and 8.3, applies only to new plants.* The impacts of the control options on existing plants that are modified or reconstructed are not considered.

Four model plant sizes are used to represent typical new sources in the industry. Two of the models correspond to small and large facilities in the household cooking equipment sector (SIC 3631), one corresponds to a new facility in the refrigerator and freezer sector (SIC 3632), and one represents the laundry equipment sector (SIC 3633). Each model plant has one coating line that applies a prime coat and a top coat to the appliance. For each size, costs are provided for two prime coating alternatives and four topcoating alternatives. These alternatives correspond to the control options shown in Table 8-11. The prime coat can be a 62-percent solids coating or it can be applied by EDP. The top coat can be applied as a 62-percent solids coating, a 70-percent solids coating, a 65.5-percent solids coating with an incinerator on the topcoat oven, or a 100-percent solids coating (powder).

Section 8.4.1 summarizes the results and presents the conclusions of the economic impact analysis. Section 8.4.2 describes the economic environment in which the industry operates. Section 8.4.3 discusses the methodology

---

*The analysis was based on model plant costs that were subsequently revised; the revised costs are presented in Section 8.2. However, the differences between the original and revised costs were not great enough to change the conclusions drawn from the economic analysis.

used to estimate the economic impacts of the control options, and Section 8.4.4 presents the estimated impacts.

8.4.1 Summary

An alternative to conventional low- and high-solids topcoating methods is the powder, or 100 percent solids, coating technology. Its adoption by firms building new plants would eliminate VOC emissions from the topcoating operation because the coating contains no VOCs. Because powder coating is a newcomer to the industry, however, some producers doubt that it is capable of producing a coating with the same properties as a conventional solvent-borne coating.

Potential limits on the widespread use of powder coating are recognized when the following procedure is applied. First, the powder coating method is shown to be more profitable than conventional or high-solids coating technologies. That is, of the eight coating line configurations considered, the two employing powder can apply the coating for the lowest cost per appliance. Thus, firms would have an economic incentive to adopt this technology even in the absence of the regulatory alternatives. Consequently, if any of the regulatory alternatives were implemented, there would be no economic impact on firms.

In the second part of the procedure the powder technology is excluded from the set of control options to account for possible limitations on its use. The most profitable configuration for each model facility is then selected from this restricted set of alternatives; these choices are assumed to represent the investments the industry would make in the absence of the regulatory alternatives. These choices are compared with the control options that yield a level of control greater than or equal to the baseline to determine the economic impacts. (The impacts of control options that yield lower levels of emissions control are assumed to be zero.) The baseline configuration varies with the type of model plant. Model lines 1 and 3 would coat appliances with an EDP prime coat and either a 62-percent or 70-percent solids top coat. Model lines 2 and 4 would use a 62-percent solids prime coat and top coat.

If all additional production costs were passed forward to the consumer, the increase in product prices would range from 0.0 to 0.7 percent. The largest impacts occur with the EDP prime/65.5-percent solids (incineration)

topcoat control option. However, the same level of control could be achieved with the EDP prime/70-percent solids topcoat configuration, which would reduce the largest price impact to 0.2 percent.

If producers absorbed all additional costs, the return on investment (ROI) would fall by 0.0 to 3.7 percentage points from the baseline rate of return of 19.3 percent. Again, the largest decline for all model lines would occur with the EDP prime/65.5-percent solids (incineration) configuration. The same level of control could be achieved with a 70-percent solids topcoat process and would result in a smaller ROI decline of 2.5 percentage points.

The additional capital required by the regulatory alternatives ranges from 0.0 to 21.2 percent of the baseline investment. Again, this range occurs when the 65.5 percent solids (incineration) option is used to apply the top coat. If a 70-percent solids top coat were used instead, the maximum increase above the baseline capital requirement would be 16.6 percent.

Growth in the large appliance industry would not be significantly affected. As pointed out in Section 8.1, growth of individual firms in recent years has occurred through merger and acquisition. The size of the profitability impacts would not seriously detract from the attractiveness of smaller firms as possible takeover candidates. Additionally, the relatively low average level of capacity use in the industry implies that much of the future growth in demand for large appliances could be met by increasing the use of existing capacity. For firms that are operating at close to full capacity, expansion by constructing new lines would not be precluded by the proposed control options.

8.4.2 Economic Environment

This section has three purposes. First, it describes the economic environment within which firms in the large appliance industry operate. Second, it augments the quantitative analysis of the economic impacts presented in Sections 8.4.3 and 8.4.4. That is, the estimated impacts are based on cost data for "representative" model plants that, while serving a useful analytical function, must be interpreted in light of actual industry conditions. Third, it presents estimates of a key financial parameter used in the analysis, the cost of capital.

8.4.2.1 Economic Structure. The economic structure of the industry can be succinctly described on the basis of four characteristics: industry concentration, plant economies of scale, process integration, and growth of firms.

The large appliance industry is relatively concentrated. New firm entry is rare, the last occurring over 15 years ago. Further, small firms have lost their share of the market to larger firms, often through acquisition by large firms. These observations are supported by historical data on four-firm concentration ratios, as shown in Table 8-31. A four-firm concentration ratio is calculated by dividing the value of shipments of the four largest firms by the value of shipments of all firms in the industry.

Reductions in unit costs resulting from increased output occur for a variety of reasons. Four factors suggest that economies of scale are important in this industry: large plant size, capital acquisition cost, transportation costs, and brand name recognition--a function of advertising costs. Data on optimal firm size are scarce. However, one study revealed that the plant size with the minimum unit production costs in the refrigerator sector had a capacity of 800,000 units per year.[37] Technology in the refrigerator sector has not significantly changed to alter this estimate. As shown in Table 8-5, average firm production in the refrigerator industry was about 270,000 units in 1977. The cost to the firm of operating a plant smaller than the optimum size is not great. Plants with one-third the optimum capacity incur a unit cost increase of 6.5 percent,[38] which suggests two important results. First, firms with plants of widely varying output capacity do not differ substantially with respect to production costs. Second, average costs appear constant over a large region of output.

Product differentiation is also important because in the refrigerator sector a brand name receives an estimated $10 to $12 premium relative to private labels before demand decreases.[39] Thus, horizontal integration may be important in realizing scale economies because consumers tend to identify with an entire appliance line rather than with a specific product.

Horizontal integration, or production of more than one type of appliance, has been a major force in the large appliance industry within the last 15 years. Specific examples of moves toward full line production are cited in Section 8.1, a phenomenon of the industry that has occurred in

TABLE 8-31. CONCENTRATION RATIOS OF FOUR LARGEST FIRMS IN THE LARGE APPLIANCE INDUSTRY DEFINED BY VALUE OF SHIPMENTS[36]

	SIC code			
	3631	3632	3633	3639
1963	0.51	0.74	0.78	0.41
1967	0.56	0.73	0.78	0.44
1972	0.60	0.85	0.83	0.57

Europe as well as in the United States.[40] These cases have contributed to the trend toward increasing concentration. The impetus for horizontal integration comes from scale economies of supply, brand name recognition, and ability to supply private label chain stores who prefer to deal with a single firm for a full line of products. Another indication of horizontal integration is that most industry sales leaders in each SIC sector carry a full line.

Vertical integration, which depends upon matching the efficient production level of the appliance components to that of the appliance itself, is not as commonplace. For example, while compressors represent a large cost component of refrigerators, vertical integration can only occur in the larger firms, since the optimal plant size for compressor production is between 2 and 3 million units per year with large unit cost increases below an output of 1 million.[41]

Section 8.1 details the growth potential for the large appliance industry. In all but relatively new product lines; e.g., microwave ovens, market penetration is quite high. That is, most existing households already own a set of large appliances. Thus, most future sales will occur for one of two reasons: replacement of appliances already in place, or establishment of new households.

The most important growth characteristic of the large appliance industry is the tendency of firms to grow by acquiring other firms. Growth through merger can be explained in terms of the structure and conduct of the large appliance industry, as discussed above and in Section 8.1. Economies of scale, in terms of both plant size and reduced costs of sales and distribution, favor the larger, multiproduct firms. Clearly, this trend could occur--and to some extend has occurred--with new plants and equipment. However, with the low overall growth in demand facing the industry, not all firms have this option, since their anticipated increase in sales may not justify adding a new production line. Thus, some firms suffering the cost disadvantages of small-scale production are willing to be acquired or to sell their equity. Often, acquiring a single line producer is a comparatively inexpensive method by which existing firms can expand.[42]

The implications of the characteristics discussed previously are that the proposed control options will have little impact. First, the low rate

of capacity utilization means that some of the increased demand can be met through an increased use of existing capacity. Second, larger firms will probably acquire smaller firms to meet expansion needs. Both factors imply that fewer new sources, which would have to meet the proposed control options, would be constructed than would be the case if these factors did not hold.

8.4.2.2 Cost of Capital. The cost of capital is the cost to the firm of financing a new investment and is the rate that a firm must receive if it is to grow in value over time. The cost of capital is a key parameter in the analysis of the economic impacts of the control options. When individual firm data are used, the average cost of equity capital is calculated for each four-digit SIC code within each large appliance industry and for the industry as a whole.

The cost of equity capital can be calculated in several ways. One is the dividend method, which assumes that dividend payments will remain constant over time and is equal to the dividend price ratio:

$$k_e^1 = \frac{D}{P}, \tag{8-1}$$

where

k_e^1 = dividend method cost of capital,

D = current dividends per share of common stock, and

P = current price per share of common stock.

Other methods assume some growth in future earnings. The Gordon-Shapiro method adds the ratio of retained earnings to book value to the dividend-price ratio to compute the cost of equity capital:

$$k_e^2 = \frac{D}{P} + \frac{E - D}{B}, \tag{8-2}$$

where

k_e^2 = Gordon-Shapiro cost of equity capital,

E = current earnings per share of common stock, and

B = current book value per share of stock.

The Solomon method adds the retained earnings-price ratio to the dividend-price ratio. The result is the inverse of the price-earnings ratio:

$$k_e^3 = \frac{D}{P} + \frac{E - D}{P} = \frac{E}{P}, \qquad (8\text{-}3)$$

where

k_e^3 = Solomon cost of equity capital.

As Table 8-32 shows, the Gordon-Shapiro method consistently yields the highest cost of equity capital--19.3 percent for the entire industry--compared with costs of capital of 18.8 and 6.6 percent given by the Solomon and dividend methods, respectively. If the most conservative (highest) estimate is used, the average return on new investments by the industry would have to yield at least 19.3 percent to finance the investment out of equity or retained earnings.

8.4.3 Methodology

This section describes the methodology used to estimate the impacts of the regulatory alternatives. A discounted cash flow (DCF) approach is used to evaluate the profitability of investing in new production facilities and, more specifically, to determine which of several alternative facilities is most profitable for the firm. A production facility consists of a prime coating and topcoating line whose VOC emissions must at least meet SIP requirements. The set of production facilities from which firms can choose comprises the model plants for which cost data are provided in Section 8.2. The DCF approach is used to select the most profitable production facility for each sector of the large appliance industry. The resulting choices show which facilities the industry would construct in the absence of the regulatory alternatives and thus constitute a baseline from which to measure the impacts of those alternatives.

The remainder of this section is organized as follows. A general description of the DCF approach is provided in Section 8.4.3.1. This background is needed for an understanding of the particular application of the DCF approach, which is used to estimate the economic impacts and which is presented in Section 8.4.3.2. Finally, the method of calculating impacts is discussed in Section 8.4.3.3.

TABLE 8-32. COST OF EQUITY CAPITAL FOR THE LARGE APPLIANCE INDUSTRY[43]

	Dividend method	Gordon-Shapiro method	Solomon method
Cooking equipment (SIC 3631)	0.056	0.189	0.135
Refrigerators/freezers (SIC 3632)	0.069	0.217	0.214
Laundry equipment (SIC 3633)	0.055	0.218	0.115
Other household appliances (SIC 3639)	0.061	0.181	0.133
Large appliance industry	0.066	0.193	0.188

8.4.3.1 Discounted Cash Flow Approach. An investment project generates cash outflows and inflows. Cash outflows include the initial investment, operating expenses, and interest paid on borrowed funds. Cash inflows are the revenues from the sales of the output produced by the project, depreciation of the capital equipment, and recovery of the working capital at the end of the project's life. Cash outflows and inflows can occur at any time during the project's lifetime. For this analysis, all flows are assumed to take place instantaneously at the end of each year. Furthermore, all investments are assumed to be conventional investments; that is, they are represented by one cash outflow followed by one or more cash inflows.[44] This assumption ensures the existence of a unique internal rate of return for each project.[45] For a project with a lifetime of N years, there are N + 1 points in time at which cash flows occur: at the end of year 0, the end of year 1, and so on through the end of the Nth year.

The initial (and only) investment is assumed to be made at the end of year 0. This cash outflow comprises the sum of the fixed capital cost and the working capital and is offset by an investment tax credit, which is calculated as a percentage of the fixed capital cost and represents a direct tax saving. The cash flow in year 0 can be given by the following equation:

$$Y_0 = (FCC + WC) - (TCRED \times FCC) . \qquad (8\text{-}4)$$

The variables for this equation and subsequent equations are defined in Table 8-33.

The project generates its first revenues (and incurs further costs) at the end of year 1. The net cash flows in this year and succeeding years can be represented by the following equation:

$$Y_t = (R_t - E_t - I_t)(1 - T) + D_t T \qquad t = 1, \ldots, N . \qquad (8\text{-}5)$$

The first term of Equation 8-5 represents the after-tax inflows of the project generated by sales of the output after all deductible expenses are netted out. Revenues are given by:

$$R_t = P \times Q \times U . \qquad (8\text{-}6)$$

Deductible operating expenses, E_t, are the sum of the fixed and variable operating costs and can be represented by:

TABLE 8-33. DEFINITIONS

D_t	Depreciation in year t
DF_t	Discount factor = $(1 + r)^{-t}$
DF	Sum of the discount factors over the life of the project = $\sum_{t=0}^{N} (1 + r)^{-t}$
DSL	Present value of the tax savings due to straight line depreciation
E_t	Operating expenses in year t
F	Annual fixed costs
FCC	Fixed capital costs
I_t	Interest paid on borrowed funds in year t
N	Project lifetime in years
NPV	Net present value
P	Price per unit of output
PDEBT	Proportion of investment financed by borrowing
Q	Annual plant capacity
R_t	Revenues in year t
r_D	Interest rate on borrowed funds
r	Discount rate, or cost of capital
T	Corporate tax rate
TCC	Total capital cost
TCRED	Investment tax credit
U	Capacity utilization rate
V	Annual variable operating costs
WC	Working capital
X	Minimum ($2,000, 0.2 × FCC)
Y_t	Cash flow in year t

$$E_t = V \times U + F \ . \tag{8-7}$$

Variable costs include expenditures on raw materials, labor (operating, supervisory, and maintenance), utilities, and credits for heat recovery. Fixed costs include expenditures for facility use, insurance, and administrative overhead. Interest paid on borrowed funds is a function of the proportion of the project financed by borrowing, the total capital cost of the project, and an interest rate, and can be given by:

$$I_t = PDEBT \times TCC \times r_D \ . \tag{8-8}$$

For income tax purposes, E_t and I_t are deductible from gross revenues, R_t. Hence, the after-tax cash inflow to the firm can be determined as these expenses are netted out and the result is multiplied by (1 - T).

Federal income tax laws also allow a deduction for depreciation of the capital equipment (not including working capital). Although depreciation is not an actual cash flow, it does reduce income tax payments (which are cash outflows) since taxes are based on net income after the depreciation allowance is deducted.[46] The expression in Equation 8-5, D_tT, represents the annual tax savings to the firm resulting from depreciation and is treated as a cash inflow. The analysis in this section employs the straight line method of depreciation. The salvage value of the line is assumed to be zero, so the annual depreciation expense is simply given by (FCC - X)/N, where N is the lifetime of the project and X is $2,000 or 20 percent of the fixed capital costs, whichever is smaller.

The net cash flows represented by Equation 8-5 occur at the end of the first through the Nth years. Additional cash inflows occur at the end of the first and Nth years. The additional cash inflow at the end of the first year is the tax savings attributable to the additional depreciation deduction at the end of the first year of 20 percent of the fixed capital cost or $2,000, whichever is smaller. By law, the basis for calculating normal depreciation allowances must be reduced by the amount of the additional first-year depreciation.[47] The additional cash inflow at the end of the Nth year occurs when the working capital, initially treated as a cash outflow, is recovered.

Because these cash flows occur over a future period of time, they must be discounted by an appropriate interest rate to reflect the fact that a

sum of money received at some future date is worth less than if that sum were received at the present time. This discount factor, DF_t, can be given by:

$$DF_t = (1 + r)^{-t} \qquad t = 0, 1, \ldots, N . \tag{8-9}$$

The sum of the discounted cash flows from a project is called the net present value of that project. That is:

$$\begin{aligned} NPV &= \sum_{t=1}^{N} (Y_t \times DF_t) - Y_o, \quad \text{or} \\ NPV &= \sum_{t=1}^{N} [Y_t (1 + r)^{-t}] - Y_o . \end{aligned} \tag{8-10}$$

8.4.3.2 Project Ranking Criterion. The specific application of DCF used in the economic analysis is discussed in this section. A criterion for ranking alternative investment projects in terms of profitability is needed. It is assumed that, in the absence of the regulatory alternatives, any firm building a new production facility would invest in the most profitable project. These facilities can be compared with those that would have to be built to comply with the regulatory alternatives; this comparison forms the basis for calculating price and rate of return impacts.

Equation 8-10 can be rearranged and used as the ranking criterion. The procedure begins when the expressions are substituted for R, E, and I (given by Equations 8-6, 8-7, and 8-8, respectively) in Equation 8-5. Next, the expressions for Y_o in Equation 8-4 and Y_t in Equation 8-5 are substituted into Equation 8-10. NPV in Equation 8-10 is then set equal to zero and the unit price, P, is solved by rearranging the terms in Y_t so the price is on the left-hand side of the equal sign, all other terms are on the right-hand side, and all other variables are defined in Table 8-33.

$$P = \frac{Z}{DF \times (1 - T) \times Q \times U} + \frac{V \times U + F + I}{Q \times U} , \tag{8-11}$$

where

$$Z = Y_o - DSL - WC(1 + r)^{-N} - X(1 + r)^{-1} \times T .$$

The resulting expression, the present worth-cost of the project, has two terms. The first, or "capital cost," term is that part of the present worth-cost accounted for by the initial capital outlay (adjusted for the tax savings attributable to depreciation, recovery of working capital, etc.) and including the return on the invested capital. The second, or "operating cost," term is a function of the fixed and variable operating costs. Hence, for any configuration, the present worth-cost given by Equation 8-11 covers the unit operating costs and yields a rate of return, r, over the project's lifetime on the unrecovered balances of the initial investment. It also represents the cost to the manufacturer of an input to the production of a large appliance, namely, the coating.

For each line size, Equation 8-11 is used to calculate the present worth-cost of the coating from each line configuration. The results are then ranked by cost, from lowest to highest. The most profitable configuration can coat an appliance for the lowest cost.

This ranking method yields the optimal solution to a simple form of the "constrained project selection problem."[48] The selection of investment projects by a firm is unconstrained if the projects are independent and indivisible and if capital is sufficient to invest in all projects with positive net present values. (A set of projects is economically independent if the acceptance of one project does not affect the acceptance or rejection of other projects in the set.)[49] If one of these conditions is violated, the project selection process is considered constrained. The eight coating line configurations confronting the typical firm represent a set of mutually exclusive projects; that is, each line produces an identical product, namely, the coating on a large appliance. Thus, the selection of one project automatically excludes the remaining seven projects. Because mutual exclusivity is a form of economic dependence among the projects in the set, selection of investment projects by the firm is constrained.

Several assumptions are implicit in this ranking procedure. First, the objective of the firm is assumed to be maximizing the future wealth of the firm's shareholders, which is the same as maximizing the firm's present value in a perfect capital market.[50] Second, the existence of a perfect capital market is assumed. This existence implies that the activities of the individual buyer or seller of securities do not affect prices and that

the individual firm can raise or invest as much cash as it desires at the market rate of interest. It also implies that market transactions are costless and that the rate of return to the firm's last investment (the marginal investment rate) is equal to the firm's marginal cost of capital. Third, investment outcomes are assumed to be known with complete certainty. Fourth, an investment project is assumed to be indivisible: it must be undertaken in its entirety or not at all.

8.4.3.3 Determining the Impacts of the Control Alternatives. This section describes how the impacts of the regulatory alternatives are estimated according to the ranking method discussed in Section 8.4.3.2. The estimated impacts are presented in Section 8.4.4. Three categories of impacts are estimated: price, rate of return, and incremental capital requirements.

Price impacts are calculated directly from Equation 8-11. Cost increases from the base cost of the most profitable line can be calculated with the imputed cost of the coating for each control option. These cost increases are translated into price impacts as they are divided by the prices received by the producer for the appliance.

Whereas price impacts are calculated under the assumption that all incremental costs associated with a given control option are passed forward to the consumer, rate of return impacts are estimated under the assumption that the producer absorbs all incremental costs, thus lowering the return on investment. In this case, the price facing the consumer would not change. For any control option, a discount rate exists that would enable the producer to maintain the present worth-cost of the coating at its baseline level; i.e., the cost associated with the most profitable line configuration that was determined from the procedure described in Section 8.4.3.2.

A specific value of the discount rate, r, was used to calculate the baseline present worth-cost from Equation 8-11. The calculation of the rate of return impact would begin by setting $P = \bar{P}$ in Equation 8-11, where $\bar{P}$ is the baseline (lowest) present worth-cost and then iteratively solving for the value of r that equates the right-hand side of Equation 8-11 with $\bar{P}$. This value, r^*, will always be less than r, the baseline rate of return. The difference between r^* and r for each control option constitutes the rate of return impact.

The incremental capital requirements are calculated from the cost data presented in Section 8.2. The additional capital required to meet the standards implied by the control options is used as a partial measure of the financial difficulty firms might face in attempting to conform to the standard. Incremental capital requirements also constitute a barrier for firms entering the large appliance market. The magnitude of the additional capital relative to the baseline capital requirements is a measure of the size of this barrier.

Impacts on both the structure of the industry and the growth rate will be treated qualitatively because it is difficult to translate price and rate of return impacts into changes in concentration ratios and growth rates. The magnitude of the price impacts, rate of return impacts, and incremental capital requirements for smaller firms will be compared to those for larger firms in the industry. If smaller firms are severely affected, they might be forced to exit the industry. The industry's structure would thus be more concentrated because the larger firms would take over markets currently supplied by the smaller firms. If the impacts on small and large firms are roughly equivalent, no significant structural changes are anticipated. Information in Sections 8.1 and 8.4.2 will be considered in conjunction with price, rate of return, and capital requirement impacts to evaluate the effect of the control options on the industry growth rate.

8.4.4 Economic Impacts

This section presents the estimated impacts of the regulatory alternatives. Each sector of the industry is assumed to be confronted with a set of line configurations. Each configuration is a combination of a prime coat method and a topcoat method. From this set of configurations, each sector chooses the most profitable, using the ranking method described in Section 8.4.3.2. The selected configuration is then compared with the configurations that comply with the various regulatory alternatives. If the configuration meets or exceeds the control level of the regulatory alternative considered, there is no impact. If it does not meet the requirements of the regulatory alternatives, its impacts are estimated according to methods described in Section 8.4.3.3.

Table 8-34 presents the capital and operating costs for four model coating lines used to represent new facilities in three sectors of the large appliance industry: cooking equipment (two line sizes), laundry equipment, and refrigerators/freezers. For each model line, costs are provided for the two prime coat methods and the four topcoat methods under consideration. The prime coat can be applied as a 62-percent solids coating or by EDP. The top coat can be applied as a 62-percent solids coating, a 70-percent solids coating, a 65.5-percent solids with incineration, or a 100-percent solids (powder). The operating costs do not include a capital recovery charge; that is, they are not annualized operating costs. Costs for each line configuration are obtained when the costs of the appropriate prime coat and topcoat methods are added. However, for three of the model lines (both line sizes of the cooking equipment sector and the refrigerator/freezer sector), no prime coat is needed when a 100-percent solids top coat is used. These costs and Equation 8-11 were used to calculate the present worth-cost of applying a coating to an appliance for each line configuration.

The highest cost of equity capital as estimated in Section 8.4.2.2--19.3 percent--was used. The investment tax credit was assumed to be 10 percent. Investment was financed out of equity or retained earnings (no borrowing). The capacity utilization rate for the cooking equipment sector was 75 percent; for the laundry sector, 66 percent; and for the refrigerator/freezer sector, 57 percent. All calculations were based on a corporate tax rate of 46 percent and straight line depreciation of capital equipment over 10 years with additional first-year depreciation of $2,000. Working capital was assumed to equal 10 percent of the installed capital cost.

Table 8-35 gives the symbols of the prime coating and topcoating methods used in the tables in the remainder of this section. Tables 8-36, 8-37, 8-38, and 8-39 show the present worth-costs for each of the four model coating lines. Associated with each cost is a ranking, which is also shown in the tables. The highest ranking (1) corresponds to the most profitable line configuration; that is, the configuration that can coat an appliance for the lowest cost.

As the tables show, in the absence of the proposed regulatory alternatives, firms in all sectors of the industry would invest in lines that apply a 100-percent solids top coat. Because these configurations have the

TABLE 8-34. CAPITAL AND OPERATING COSTS FOR MODEL PLANTS
($ Thousands)

Costs	Prime coat		Top coat			
	62% solids	EDP	62% solids	70% solids	65.5% solids with incineration	Powder
			Model plant 1: cooking equipment (small facility)[a]			
Installed capital cost	254.2	267.6	142.5	142.5	179.0	362
Annual fixed costs	55.2	55.7	50.7	50.7	52.2	59.5
Annual variable costs	167.0	127.0	157.4	157.4	164.4	172.3
			Model plant 2: cooking equipment (large facility)[b]			
Installed capital cost	537.7	690.7	383.6	383.6	425.1	538.0
Annual fixed costs	111.5	117.6	105.3	105.3	107.0	111.5
Annual variable costs	198.8	180.5	203.5	203.7	210.2	282.9
			Model plant 3: laundry equipment[c]			
Installed capital cost	1,700.0	1,819.0	1,220.0	1,220.0	1,325.0	1,227.0
Annual fixed costs	278.0	282.8	258.8	258.8	263.0	259.1
Annual variable costs	1,064.9	832.7	782.4	783.8	788.8	568.7

(continued)

TABLE 8-34 (continued)

	Prime coat		Top coat			
	62% solids	EDP	62% solids	70% solids	65.5% solids with incineration	Powder
			Model plant 4: refrigerators/freezers[d]			
Installed capital cost	1,394.2	1,592.0	911.2	911.2	1,016.2	1,571.0
Annual fixed costs	243.3	251.2	223.9	223.9	228.1	250.3
Annual variable costs	616.7	658.6	771.1	772.7	777.1	978.7

NOTE: The costs in this table were taken from an earlier draft and thus will not agree with the cost data presented in Section 8.2. The differences between the two sets of costs were not significant enough to change the conclusions drawn from the economic analysis.

[a]Costs taken from Tables 8-17 and 8-22.

[b]Costs taken from Tables 8-18 and 8-23.

[c]Costs taken from Tables 8-19 and 8-24.

[d]Costs taken from Tables 8-20 and 8-25.

TABLE 8-35. DEFINITION OF REGULATORY ALTERNATIVES

Symbol	Definition
A-II	62 percent solids prime coat
A-III	EDP prime coat
B-II	62 percent solids top coat
B-III	70 percent solids top coat or 65.5 percent solids top coat with incineration
B-IV	100 percent solids top coat (powder)

TABLE 8-36. MODEL PLANT 1:[a] RANKING OF COATING LINES BY PRESENT WORTH-COST[b]

Prime coat regulatory alternative	Topcoat regulatory alternative							
	B-II		B-III				B-IV[c]	
			70% solids		Incineration			
	Cost	Rank	Cost	Rank	Cost	Rank	Cost	Rank
A-II	44.28	4	44.28	4	45.88	5	27.93	1
A-III	41.56	2	41.56	2	43.16	3	27.93	1

[a]Annual line capacity = 17,000 units; capacity utilization = 75 percent.

[b]Costs are calculated through a discounted cash flow method and the following assumptions:

(1) Discount rate = 19.3 percent.
(2) Investment tax credit = 10 percent.
(3) Investment is financed out of retained earnings (no borrowing) and is made at the end of year 0.
(4) Straight line depreciation of capital equipment extends over 10 years.
(5) Firm takes additional first-year depreciation of $2,000.
(6) Working capital = 10 percent of installed capital costs.
(7) Corporate tax rate = 46 percent.

[c]No prime coat is needed with this method.

TABLE 8-37. MODEL PLANT 2:[a] RANKING OF COATING LINES BY PRESENT WORTH-COST[b]

Prime coat regulatory alternative	Topcoat regulatory alternative							
	B-II		B-III				B-IV[c]	
			70% solids		Incineration			
	Cost	Rank	Cost	Rank	Cost	Rank	Cost	Rank
A-II	8.68	2	8.69	3	8.89	4	5.37	1
A-III	9.05	5	9.06	6	9.26	7	5.37	1

[a]Annual line capacity = 143,000 units; capacity utilization = 75 percent.

[b]Costs are calculated through a discounted cash flow method and the following assumptions:

(1) Discount rate = 19.3 percent.
(2) Investment tax credit = 10 percent.
(3) Investment is financed out of retained earnings (no borrowing) and is made at the end of year 0.
(4) Straight line depreciation of capital equipment extends over 10 years.
(5) Firm takes additional first-year depreciation of $2,000.
(6) Working capital = 10 percent of installed capital costs.
(7) Corporate tax rate = 46 percent.

[c]No prime coat is needed with this method.

TABLE 8-38. MODEL PLANT 3:[a] RANKING OF COATING LINES BY PRESENT WORTH-COST[b]

Prime coat regulatory alternative	Topcoat regulatory alternative							
	B-II		B-III				B-IV	
			70% solids		Incineration			
	Cost	Rank	Cost	Rank	Cost	Rank	Cost	Rank
A-II	5.14	5	5.14	5	5.21	6	4.82	2
A-III	4.85	3	4.85	3	4.92	4	4.53	1

[a]Annual line capacity = 995,000 units; capacity utilization = 66 percent.

[b]Costs are calculated through a discounted cash flow method and the following assumptions:

(1) Discount rate = 19.3 percent.
(2) Investment tax credit = 10 percent.
(3) Investment financed out of retained earnings (no borrowing) and is made at the end of year 0.
(4) Straight line depreciation of capital equipment extends over 10 years.
(5) Firm takes additional first-year depreciation of $2,000.
(6) Working capital = 10 percent of installed capital costs.
(7) Corporate tax rate = 46 percent.

TABLE 8-39. MODEL PLANT 4:[a] RANKING OF COATING LINES BY PRESENT WOTH-COST[b]

Prime coat regulatory alternative	Topcoat regulatory alternative							
	B-II		B-III				B-IV[c]	
			70% solids		Incineration			
	Cost	Rank	Cost	Rank	Cost	Rank	Cost	Rank
A-II	6.72	2	6.73	3	6.84	5	4.49	1
A-III	6.83	4	6.83	4	6.94	6	4.49	1

[a]Annual line capacity = 688,000 units; capacity utilization = 57 percent.

[b]Costs are calculated through a discounted cash flow method and the following assumptions:

(1) Discount rate = 19.3 percent.
(2) Investment tax credit = 10 percent.
(3) Investment is financed out of retained earnings (no borrowing) and is made at the end of year 0.
(4) Straight line depreciation of capital equipment extends over 10 years.
(5) Firm takes additional first-year depreciation of $2,000.
(6) Working capital = 10 percent of installed capital costs.
(7) Corporate tax rate = 46 percent.

[c]No prime coat is needed with this method.

lowest emission rates and because firms investing in new facilities already have an economic incentive to adopt this technology, none of the regulatory alternatives would have an impact on the industry. This conclusion is based on the assumption that a powder top coat and a conventional solvent-borne top coat have the same properties (strength, durability, and corrosion resistance).

Because the powder coating technology is a newcomer to the industry, however, some producers doubt that it is capable of producing a coating with the same properties as a solvent-borne coating. Powder top coating is excluded from the set of control options to account for possible limitations on its use. Within each sector of the industry, firms investing in new facilities are restricted to a choice of one of the remaining six line configurations.

The rankings in Tables 8-36 through 8-39 are used again to determine the investment behavior of each sector of the industry in the absence of the regulatory alternatives. The most profitable line configurations for Model line 1 and Model line 3 are the EDP prime coat with either a 62-percent solids or a 70-percent solids top coat. For Model line 2 and Model line 4, the most profitable line configuration is the 62-percent solids prime coat and top coat. These configurations constitute the baseline from which the impacts of the regulatory alternatives are calculated.

The remainder of this section presents the impacts of the regulatory alternatives for each model line on product price, rate of return, and capital requirements. Because there are no impacts, if producers are able to use powder coating, the impact analysis that follows is restricted to the case in which producers cannot use this technology.

8.4.4.1 Price Impacts. Price impacts were estimated based on the assumption that all incremental costs attributable to the regulatory alternatives are passed forward to the consumer, thus enabling the firm to maintain its return on investment. Tables 8-40, 8-41, 8-42, and 8-43 present these impacts for each of the four model lines. The impacts reported in these tables depended on the baseline configuration selected by the representative firm in each sector of the industry. The level of control associated with this configuration was compared with the levels required by the remaining alternatives. The impact of any regulatory alternative

yielding a level of control that was less stringent than the baseline configuration was assumed to be zero. The estimated increases in the price received by producers range from 0.0 to 0.7 percent.

For all four model lines, the largest impact occurs for the EDP prime coat/65.5-percent solids (incineration) topcoat configuration. However, in all four cases, this impact would be smaller if the EDP prime coat and 70-percent solids topcoat configuration, which has the same level of control, were used. In this case, the estimated increases in price would range from 0.0 to 0.2 percent.

8.4.4.2 Rate of Return Impacts. Rate of return impacts were estimated based on the assumption that producers would absorb all of the incremental costs of control, thus lowering the return on investment. Tables 8-44, 8-45, 8-46, and 8-47 show for each model line the reduction in the return on investment attributable to the regulatory alternatives. Given a baseline return on investment of 19.3 percent, the decline ranges from 0.0 to 3.7 percentage points.

In each of the four model lines, the largest absolute decline in return on investment occurs with the EDP prime coat/65.5-percent solids (incineration) topcoat configuration. However, as stated in Section 8.4.4.1, this same level of control could be obtained with an EDP prime coat and a 70-percent solids topcoat line configuration with a smaller reduction in return on investment. For example, the return on investment for Model line 4 would decrease by 1.2 percentage points, instead of the 2.4-percentage point decrease that occurs if the incineration option is used.

8.4.4.3 Incremental Capital Requirements. The additional capital investment required by the regulatory alternatives is shown for each model line in Tables 8-48, 8-49, 8-50, and 8-51. These additional requirements range from 0.0 to 21.2 percent of the baseline capital requirements. Again, for all models the largest additional capital investment is required for the EDP prime coat/65.5-percent solids (incineration) topcoat control option. With the EDP prime coat and the 70-percent solids topcoat control option, these increases could be reduced and the same level of control obtained. For example, for Model line 4 the additional capital requirement would be 8.6 percent instead of 13.1 percent with the EDP prime coat and the 70-percent solids top coat rather than the EDP prime coat and the 65.5-percent solids with incineration topcoat control option.

TABLE 8-40. MODEL LINE 1: PRICE IMPACTS OF CONTROL OPTIONS, CONSTRAINED CASE (%)[a]

Prime coat regulatory alternative	Topcoat regulatory alternative		
	B-II	B-III	
		70% solids	Incineration
A-II	0.00[b]	0.00[b]	0.00[b]
A-III	0.00	0.00	0.69

[a]The producer price of the appliance coated on this line is estimated as $231 per unit. Topcoat Regulatory Alternative B-IV (powder) is not included here because it is assumed not to be perfectly substitutable with conventional organic-solvent-borne coatings. Percent increase in price is calculated by dividing the cost increase over the baseline of the regulatory alternative by the producer price.

[b]There is no impact because the baseline configuration (determined from the rankings in Table 8-36) has a higher level of control than the alternative under consideration.

TABLE 8-41. MODEL LINE 2: PRICE IMPACTS OF CONTROL OPTIONS, CONSTRAINED CASE (%)[a]

Prime coat regulatory alternative	Topcoat regulatory alternative		
	B-II	B-III	
		70% solids	Incineration
A-II	0.00	0.00	0.09
A-III	0.16	0.16	0.25

[a]The producer price of the appliance coated on this line is estimated as $231 per unit. Topcoat Regulatory Alternative B-IV (powder) is not included here because it is assumed not to be perfectly substitutable with conventional organic-solvent-borne coatings. Percent increase in price is calculated by dividing the cost increase over the baseline of the regulatory alternative by the producer price.

TABLE 8-42. MODEL LINE 3: PRICE IMPACTS OF CONTROL OPTIONS, CONSTRAINED CASE (%)[a]

Prime coat regulatory alternative	Topcoat regulatory alternative		
	B-II	B-III	
		70% solids	Incineration
A-II	0.00[b]	0.00[b]	0.00[b]
A-III	0.00	0.00	0.04

[a]The producer price of the appliance coated on this line is estimated as $169 per unit. Topcoat Regulatory Alternative B-IV (powder) is not included here because it is assumed not to be perfectly substitutable with conventional organic-solvent-borne coatings. Percent increase in price is calculated by dividing the cost increase over the baseline of the regulatory alternative by the producer price.

[b]There is no impact because the baseline configuration (determined from the rankings in Table 8-36) has a higher level of control than the alternative under consideration.

TABLE 8-43. MODEL LINE 4: PRICE IMPACTS OF CONTROL OPTIONS, CONSTRAINED CASE (%)[a]

Prime coat regulatory alternative	Topcoat regulatory alternative		
	B-II	B-III	
		70% solids	Incineration
A-II	0.00	0.00	0.04
A-III	0.04	0.04	0.08

[a]The producer price of the appliance coated on this line is estimated as $268 per unit. Topcoat Regulatory Alternative B-IV (powder) is not included here because it is assumed not to be perfectly substitutable with conventional organic-solvent-borne coatings. Percent increase in price is calculated by dividing the cost increase over the baseline of the regulatory alternative by the producer price.

TABLE 8-44. MODEL LINE 1: RETURN ON INVESTMENT IMPACTS OF CONTROL OPTIONS, CONSTRAINED CASE[a]

Prime coat regulatory alternative	Topcoat regulatory alternative		
	B-II	B-III	
		70% solids	Incineration
A-II	0.00[b]	0.00[b]	0.00[b]
A-III	0.00	0.00	-3.05

[a]The baseline return on investment is 19.30 percent. Table entries are percentage point declines in this baseline rate. Topcoat Regulatory Alternative B-IV (powder) is not included because it is assumed not to be perfectly substitutable with conventional organic-solvent-borne coatings.

[b]There is no impact because the baseline configuration (determined from the rankings in Table 8-36) has a higher level of control than the alternative under consideration.

TABLE 8-45. MODEL LINE 2: RETURN ON INVESTMENT IMPACTS OF CONTROL OPTIONS, CONSTRAINED CASE[a]

Prime coat regulatory alternative	Topcoat regulatory alternative		
	B-II	B-III	
		70% solids	Incineration
A-II	0.00	-0.02	-1.53
A-III	-2.45	-2.47	-3.72

[a]The baseline return on investment is 19.30 percent. Table entries are percentage point declines in this baseline rate. Topcoat Regulatory Alternative B-IV (powder) is not included because it is assumed not to be perfectly substitutable with conventional organic-solvent-borne coatings.

TABLE 8-46. MODEL LINE 3: RETURN ON INVESTMENT IMPACTS OF CONTROL OPTIONS, CONSTRAINED CASE[a]

Prime coat regulatory option	Topcoat regulatory alternative		
	B-II	B-III	
		70% solids	Incineration
A-II	0.00[b]	0.00[b]	0.00[b]
A-III	0.00	-0.03	-0.96

[a]The baseline return on investment is 19.30 percent. Table entries are percentage point declines in this baseline rate. Topcoat regulatory Alternative B-IV (powder) is not included because it is assumed not to be perfectly substitutable with conventional organic-solvent-borne coatings.

[b]There is no impact because the baseline configuration (determined from the rankings in Table 8-38) has a higher level of control than the alternative under consideration.

TABLE 8-47. MODEL LINE 4: RETURN ON INVESTMENT IMPACTS OF CONTROL OPTIONS, CONSTRAINED CASE[a]

Prime coat regulatory alternative	Topcoat regulatory alternative		
	B-II	B-III	
		70% solids	Incineration
A-II	0.00	-0.04	-1.25
A-III	-1.17	-1.21	-2.38

[a]The baseline return on investment is 19.30 percent. Table entries are percentage point declines in this baseline rate. Topcoat Regulatory Alternative B-IV (powder) is not included because it is assumed not to be perfectly substitutable with conventional organic-solvent-borne coatings.

TABLE 8-48. MODEL LINE 1: INCREMENTAL CAPITAL REQUIREMENTS OF CONTROL OPTIONS[a]

Prime coat regulatory alternative	Topcoat regulatory alternative					
	B-II		B-III			
	Change from baseline		70% solids Change from baseline		Incineration Change from baseline	
	000 $	%	000 $	%	000 $	%
A-II	0.0[b]	0.0[b]	0.0[b]	0.0[b]	0.0[b]	0.0[b]
A-III	0.0	0.0	0.0	0.0	40.1	8.9

[a]The baseline capital requirement for this model plant is $451.6 thousand

[b]There is no impact because the baseline configuration (determined from the rankings in Table 8-36) has a higher level of control than the alternative under consideration.

TABLE 8-49. MODEL LINE 2: INCREMENTAL CAPITAL REQUIREMENTS OF CONTROL OPTIONS[a]

Prime coat regulatory alternative	Topcoat regulatory alternative					
	B-II		B-III			
	Change from baseline		70% solids Change from baseline		Incineration Change from baseline	
	000 $	%	000 $	%	000 $	%
A-II	0.0	0.0	0.0	0.0	45.7	4.5
A-III	168.7	16.6	168.7	16.6	214.3	21.2

[a]The baseline capital requirement for this model plant is $1,013.4 thousand.

TABLE 8-50. MODEL LINE 3: INCREMENTAL CAPITAL REQUIREMENTS OF CONTROL OPTIONS[a]

Prime coat regulatory alternative	Topcoat regulatory alternative					
	B-II		B-III			
	Change from baseline		70% solids Change from baseline		Incineration Change from baseline	
	000 $	%	000 $	%	000 $	%
A-II	0.0[b]	0.0[b]	0.0[b]	0.0[b]	0.0[b]	0.0[b]
A-III	0.0	0.0	0.0	0.0	115.5	3.5

[a]The baseline capital requirement for this model plant is $3,344.0 thousand.

[b]There is no impact because the baseline configuration (determined from the rankings in Table 8-38) has a higher level of control than the alternative under consideration.

TABLE 8-51. MODEL LINE 4: INCREMENTAL CAPITAL REQUIREMENTS OF CONTROL OPTIONS[a]

Prime coat regulatory alternative	Topcoat regulatory alternative					
	B-II		B-III			
	Change from baseline		70% solids Change from baseline		Incineration Change from baseline	
	000 $	%	000 $	%	000 $	%
A-II	0.0	0.0	0.0	0.0	115.5	4.6
A-III	217.6	8.6	217.6	8.6	333.1	13.1

[a]The baseline capital requirement for this model plant is $2,535.9 thousand.

8.5 POTENTIAL SOCIOECONOMIC AND INFLATIONARY IMPACTS

Executive Order 12044 requires the evaluation of the inflationary impacts of major legislative proposals, regulations, and rules. The regulatory options would be considered a major action (thus requiring the preparation of an Inflation Impact Statement) if either of the following criteria applies:

- Additional annualized costs of compliance, including capital charges (interest and depreciation), will total $100 million within any calendar year by the attainment date, if applicable, or within 5 years of implementation.

- Total additional cost of production is more than 5 percent of the selling price of the product.

The regulatory alternatives for the large appliance industry would not qualify as a major action by the second criterion because the largest price increase was estimated to be 0.7 percent (Table 8-40). The remainder of this section is devoted to estimating the total additional cost of compliance with the regulatory control alternatives.

The first step was to determine annual growth rates for each sector of the large appliance industry. Data from Table 8-10 were used to calculate the percent change in forecasted production between 1978 and 1983 for the three sectors used in the analysis: washers and dryers (SIC 3633), refrigerators (SIC 3632), and ranges and microwave ovens (SIC 3631). These percent changes were then converted into average annual growth rates. For home cooking equipment, the growth rate averaged 5.5 percent per year; for refrigerators and freezers, 1.3 percent per year; and for home laundry equipment, 2.5 percent per year. These growth rates were then multiplied by 1977 output (Table 8-6) to obtain estimates of 1981 and 1986 production. (The period from 1981 through 1986 would be the 5-year period following implementation.) For each of the three sectors, the difference between 1986 and 1981 production represents that portion of the industry's output that could be affected by the regulatory alternatives. For SIC 3631 (home cooking equipment), this figure was 2,556.7 thousand units; for SIC 3632 (refrigerators and freezers), 507.3 thousand units; and for SIC 3633 (home laundry equipment), 1,241.7 thousand units.

For each sector, the projected increase in output was translated into "model line equivalents" by dividing it by the product of the annual capac-

TABLE 8-52. POTENTIAL INCREMENTAL ANNUALIZED COST OF COMPLIANCE WITH REGULATORY ALTERNATIVE A-III/B-III, 1986

	Number of model line equivalents	Cost per line (000 $)	Cost per sector (000 $)
Scenario I[a]			
Cooking equipment	200	17	3,400
Refrigerators/freezers	2	131	262
Laundry equipment	2	35	70
Total	204		3,732
Scenario II[b]			
Cooking equipment	24	41	984
Refrigerators/freezers	2	131	262
Laundry equipment	2	35	70
Total	28		1,316

[a]Assumes that all of the increase in output in SIC 3631 is met with construction of small lines (annual capacity = 17,000 units).

[b]Assumes that all of the increase in output in SIC 3631 is met with construction of large lines (annual capacity = 143,000 units).

ity of the model line and the capacity utilization rate. Two scenarios were analyzed: one in which all of the increase in the output of the home cooking equipment sector is met by adding small lines, the other in which all of the increased output is produced by adding large lines. The incremental annualized costs of compliance were calculated based on the data given in Table 8-34. For each sector, the incremental annualized cost of compliance for Regulatory Alternative A-III/B-III (incineration) was multiplied by the number of model line equivalents to estimate the cost of compliance for that sector. The costs for each sector were added to determine the impact of this alternative on the entire industry. All results are given in Table 8-52.

As the table shows, the incremental cost for the entire large appliance industry to comply with the option that would have the worst impact would range from $1.3 million to $3.7 million. Most of the additional costs of compliance would be incurred by the household cooking equipment sector. However, because neither the annualized costs of compliance nor the estimated price impacts meet the criteria specified in the Executive Order, the regulatory alternatives are not a major action and thus do not require the preparation of an Inflation Impact Statement.

8.6 REFERENCES

1. EPA Economic Information System (EIS), Plant Data Base. EPA Technical Library. Research Triangle Park, NC. 1978.

2. Bureau of the Census, U.S. Department of Commerce. Current Industrial Reports, Series MA-36F, 1968-1977.

3. The Incredible Value Story. Metal Products Finishing. 24(7):56. July 1967.

4. Stevens, James, and Donald Owens. 1980-1990: Ten Good Years. Appliance. 36(1):46-47. January 1979.

5. Bureau of Labor Statistics, U.S. Department of Labor. Average Annual Consumer and Wholesale Price Indexes. Washington, DC. 1978.

6. Few Survivors in the Icebox Field. New York Times. February 5, 1979. p. D-1.

7. Telecon. Scott, Marsha, Research Triangle Institute, with McGraff, Ted, Bureau of the Census, U.S. Department of Commerce. January 16, 1978.

8. Bureau of the Census, U.S. Department of Commerce. 1976 Annual Survey of Manufacturers, Industry Profile Series.

9. Gas Appliance Manufacturers Association, Inc. Statistical Highlights: Ten Year Summary, 1968-1977. Arlington, VA.

10. Industry and Trade Administration, U.S. Department of Commerce. U.S. Industrial Outlook. 1978.

11. Bureau of the Census, U.S. Department of Commerce. 1977 Survey of Plant Capacity.

12. Corporate Strategies: White Consolidated's New Appliance Punch. Business Week. 94-98. May 7, 1979.

13. Standard & Poor's Industry Surveys. Electronics--Electrical Basic Analysis. September 7, 1978. p. E-19.

14. Industry and Trade Administration, U.S. Department of Commerce. U.S. Industrial Outlook. 1979.

15. Appliance. 34(9):18. September 1977.

16. Out of the Frying Pan, into the Fray. Forbes. 38. July 23, 1979.

17. Maytag Painting Facility Conserves Energy. Industrial Finishing. 26-31. January 1977.

18. Appliance. 34(2):42. February 1977.

19. Appliance. 34(11):34. November 1977.

20. Telecon. McCrodden, Brian J., with Acker, R., Ransburg Corporation. May 8, 1980. Costs of electrostatic spray application equipment.

21. Telecon. McCrodden, Brian J., with Lissy, G., Nordson Corporation. May 9, 1980. Costs of powder application equipment.

22. Telecon. McCrodden, Brian J., with Steinhebel, F., Binks Manufacturing Company. May 8, 1980. Costs of electrocoating equipment.

23. Telecon. McCrodden, Brian J., with White, W., The DeVilbiss Company. May 8, 1980. Costs of paint handling and memory systems.

24. Letter from Babb, Kenneth, to Borders, S., Cincinnati Industrial Machinery. July 30, 1980. Presenting results of finishing systems cost information developed in April 16, 1980, meeting.

25. Society of Industrial Realtors Industrial Real Estate Market Survey. Economics and Research Division, National Association of Realtors. April 1980.

26. Office of Conservation and Solar Energy, U.S. Department of Energy. Code of Federal Regulations. Title 10, Chapter IX, Subchapter A, Part 436. Washington, DC. Office of the Federal Register. January 23, 1980.

27. Telecon. Babb, Kenneth, with Anthony, W., Glidden Coatings and Resins Company. May 12, 1980. Costs of high-solids coatings.

28. Telecon. McCrodden, Brian J., with Taylor, R., Glidden Coatings and Resins Company. May 9, 1980. Costs of electrocoat feed materials.

29. Telecon. McCrodden, Brian J., with Lovano, S., Ferro Corporation. May 7, 1980. Cost of powder coatings for large appliances.

30. United States Congress. Federal Water Pollution Control Act, as amended November 1978. 33 USC 1251 et seq. Washington, DC. U.S. Government Printing Office. December 1978.

31. United States Congress. Clean Air Act, as amended August 1977. 42 USC 7401 et seq. Washington, DC. U.S. Government Printing Office. November 1977.

32. Telecon. Scott, Marsha, Research Triangle Institute, with Kukulka, J., Effluent Guidelines Division, U.S. Environmental Protection Agency. December 10, 1979. Cost of water pollution control regulations in the large appliance surface coating industry.

33. Industrial Ventilation Manual. American Conference of Government Industrial Hygienists. Washington, DC. n.d.

34. United States Congress. Toxic Substances Control Act. 15 USC 2601 et seq. Washington, DC. U.S. Government Printing Office. October 1976.

35. Telecon. Scott, Marsha, Research Triangle Institute, with Beronja, G., Office of Toxic Substances, U.S. Environmental Protection Agency. Impact of toxic substances control on the large appliance surface coating industry.

36. Bureau of the Census, U.S. Department of Commerce. 1972 Census of Manufactures, Volume 1. Washington, DC. 1976.

37. Scherer, F. M., et al. The Economics of Multi-Plant Operation. Cambridge, Harvard University Press, 1975.

38. Ref. 36, p. 80.

39. Ref. 36, p. 244.

40. Ref. 36, p. 162.

41. Ref. 36, p. 269.

42. Ref. 36, p. 163.

43. Moody's Industrial Manual, 1979; Standard and Poor's Corporation Records, 1979; Wall Street Journal, August 15, 1979.

44. Bussey, L.E. The Economic Analysis of Industrial Projects. Englewood Cliffs, NJ, Prentice-Hall, Inc., 1978. p. 220.

45. Ref. 43, p. 222, footnote 13.

46. Ref. 43, p. 73.

47. Ref. 43, p. 78.

48. Ref. 43, pp. 266-276.

49. Ref. 43, p. 245.

50. Ref. 43, p. 153.

APPENDIX A

EVOLUTION OF PROPOSED BACKGROUND INFORMATION DOCUMENT

APPENDIX A

EVOLUTION OF PROPOSED BACKGROUND INFORMATION DOCUMENT

The study to develop a proposed standard of performance for new surface coating operations within the large appliance industry began in October 1978 under U.S. Environmental Protection Agency (EPA) Contract number 68-02-3056. The Office of Air Quality Planning and Standards (OAQPS), with Mr. William L. Johnson, lead engineer, of the Chemicals and Petroleum Branch (CPB), authorized the Research Triangle Institute (RTI) to conduct the study. In June 1980, Mr. William L. Tippitt of the Standards Development Branch (SDB) replaced Mr. Johnson as lead engineer.

The overall objective of this study was to compile and analyze data in sufficient detail to substantiate a standard of performance. To accomplish this objective, the investigators first acquired the necessary technical information on:

- Coating operations and processes,
- Release and controllability of organic emissions from this source into the atmosphere, and
- Costs of demonstrated control techniques.

A literature search was conducted and data obtained from the following:

- U.S. Department of Commerce,
- National Technical Information Service,
- Various trade journals, and
- Papers presented at trade association meetings.

This information was supplemented by plant tours, meetings, and telephone contacts with the large appliance industry, coatings suppliers, and equipment vendors to gain first-hand information on coating operations and control techniques.

The technical background chapters describing the industry, emission control techniques, reconstruction and modification considerations, model plants, and regulatory alternatives were completed in November 1979 and mailed to industry for review and comment. The preliminary economic analysis was completed in December 1979.

Industry comments on the draft BID were analyzed and incorporated into a revised version that was sent to Working Group in February 1980. Working Group comments and delayed industry comments were considered and incorporated into the present version of the BID, along with the proposed standards and preamble, to complete the package that was distributed to National Air Pollution Control Techniques Advisory Committee (NAPCTAC) members in May 1980. Similar packages were sent to industry and environmental groups for additional comment.

NAPCTAC review was accomplished in June, and the revised proposal package was submitted for Steering Committee review in July.

Table A-1 summarizes the major events in the evolution of the document. Table A-2 lists the firms and organizations contacted during preparation of the document.

TABLE A-1. MAJOR EVENTS AND ACCOMPLISHMENTS IN THE EVOLUTION OF THE BACKGROUND INFORMATION DOCUMENT

Month	Event
October 78	Work begun by the Research Triangle Institute.
November 78	Background information requested from the Association of Home Appliance Manufacturers; Phase I work plan submitted.
December 78	Plant visit conducted at Maytag Company in Newton, Iowa.
February 79	Phase I completed; Phase II and III work plan revised.
March 79	Plant tours conducted at Whirlpool Corporation in Evansville, Indiana, and at General Electric Company and Hobart Corporation in Louisville, Kentucky.
April 79	Meetings conducted with the DeVilbiss Company in Toledo, Ohio, and with Glidden Coatings and Resins Company in Strongsville, Ohio.
May 79	Meetings conducted with Pittsburg Paint and Glass Industries, Incorporated, in Pittsburgh, Pennsylvania, and with Ransburg Corporation in Indianapolis, Indiana.
June 79	Model plants and regulatory alternatives defined.
November 79	Draft BID chapters 3-8.3 distributed to industry. Plant tours conducted at Maytag Company in Newton, Iowa, and at White Consolidated Industries in Columbus, Ohio.
December 79	Preliminary economic analysis completed.
February 80	Transfer efficiency tests conducted with Ransburg Corporation, General Electric Company, and Glidden Coatings and Resins Company in Indianapolis, Indiana. Working Group Package distributed.
April 80	Meeting conducted with Cincinnati Industrial Machinery in Cincinnati, Ohio.
May 80	NAPCTAC Package distributed.
June 80	Draft BID reviewed by NAPCTAC. Steering Committee Package distributed.

TABLE A-2. SUPPLIERS AND MANUFACTURERS CONTACTED

Association of Home Appliance Manufacturers
Cincinnati Industrial Machinery
DeSoto, Incorporated
DeVilbiss Company
Ferro Corporation
General Electric Company
Glidden Coatings and Resins Company
Hobart Corporation
Maytag Company
Nordson Corporation
Pittsburg Paint and Glass Industries, Incorporated
Ransburg Corporation
Whirlpool Corporation
White Consolidated Industries

APPENDIX B

INDEX TO ENVIRONMENTAL IMPACT CONSIDERATIONS

APPENDIX B

INDEX TO ENVIRONMENTAL IMPACT CONSIDERATIONS

Agency guidelines	Location within the BID
1. Background and description	
a. Process affected	The process to be affected is described in Section 3.2.
b. Industry affected	Descriptions of the industry to be affected are given in Sections 3.1 and 8.1.
c. Availability of control	Information on the availability technology of control technology is given in Chapter 4.
2. Alternatives considered	
a. Taking action or postponing action	
• Environmental impacts	The environmental impacts of not implementing any standard are discussed in Sections 7.8.2 and 7.8.3.
b. Promulgating an NSPS equivalent to the assumed CTG limit	
• Air pollution	The air pollution impacts of this alternative are discussed in Sections 6.3.2, 6.3.3, and 7.2.2.
• Water pollution	The water pollution impacts of this alternative are discussed in Section 7.4.
• Solid waste disposal	The solid waste disposal impacts of this alternative are discussed in Section 7.5.

• Energy	The energy impacts of this alternative are discussed in Section 7.6.
• Economic	The economic impacts of this alternative are discussed in Sections 8.2 and 8.3.
c. Promulgating an NSPS that would reduce prime coat emissions by 55 percent from the no NSPS baseline	
• Air pollution	The air pollution impacts of this alternative are discussed in Sections 6.3.2, 6.3.3, and 7.2.2.
• Water pollution	The water pollution impacts of this alternative are discussed in Section 7.4.
• Solid waste disposal	The solid waste disposal impacts of this alternative are discussed in Section 7.5.
• Energy	The energy impacts of this alternative are discussed in Section 7.6.
• Economic	The economic impacts of this alternative are discussed in Sections 8.2 and 8.3.
d. Promulgating an NSPS that would reduce topcoat emissions by 30 percent from the no NSPS baseline	
• Air pollution	The air pollution impacts of this alternative are discussed in Sections 6.3.2, 6.3.3, and 7.2.2.
• Water pollution	The water pollution impacts of this alternative are discussed in Section 7.4.
• Solid waste disposal	The solid waste disposal impacts of this alternative are discussed in Section 7.5.

• Energy	The energy impacts of this alternative are discussed in Section 7.6.
• Economic	The economic impacts of this alternative are discussed in Sections 8.2 and 8.3.
e. Promulgating an NSPS that would eliminate topcoat emissions	
• Air pollution	The air pollution impacts of this alternative are discussed in Sections 6.3.2, 6.3.3, and 7.2.2.
• Water pollution	The water pollution impacts of this alternative are discussed in Section 7.4.
• Solid waste disposal	The solid waste disposal impacts of this alternative are discussed in Section 7.5.
• Energy	The energy impacts of this alternative are discussed in Section 7.6.
• Economic	The economic impacts of this alternative are discussed in Sections 8.2 and 8.3.
3. Other considerations and impacts	
a. Other environmental impacts	Other environmental impacts are discussed in Section 7.7.
b. Irreversible and irretrievable commitment of resources	The irreversible and irretrievable commitment of resources is discussed in Section 7.8.1.

APPENDIX C

EMISSION SOURCE TEST DATA

APPENDIX C

EMISSION SOURCE TEST DATA

Because uncontrolled emissions can be calculated from coatings data, because of the dispersed nature of the emissions, and because the use of capture systems and control devices is not expected, the development of this standard did not require emission source testing.

APPENDIX D
EMISSION MEASUREMENT AND MONITORING

APPENDIX D - EMISSION MEASUREMENT AND MONITORING

D.1 EMISSION MEASUREMENT METHODS

During the standard support study for the large appliance industry, the U.S. Environmental Protection Agency (EPA) did not conduct tests for volatile organic compounds (VOCs) at any plant. However, some coating samples were submitted by appliance paint manufacturers and analyzed by the EPA, and several field source tests were conducted by EPA at plants in similar surface coating industries (automobile, can, metal coil, and pressure-sensitive tapes and labels).

D.1.1 Coating Analysis Methods

Five appliance coating samples were received from paint manufacturers; all were high-solids topcoat paints. An earlier version of Reference Method 24 was used for analysis, and because the coatings contained no water, the water content was not determined. The results from the analysis compared favorably with the specifications provided by the manufacturers.

Since the coating tests were performed, Method 24 has been modified. Statistical confidence intervals are applied to the intermediate water analysis result to eliminate individual analyst or interlaboratory biases. Because this step is merely a refinement of the procedure and because no water was in the sample coatings, the sample analysis results would not be affected.

D.1.2 Stack Emission Test Methods

Although no large appliance coating plants were tested, emission tests were conducted at several plants in similar coating industries. The purposes of the tests were to determine several conditions: control efficiency across the vapor control device (usually a carbon adsorber or incinerator), overall control efficiency of the entire plant, organic-solvent material balance for each coating line, amount of fugitive emissions, and effectiveness of the hooding devices.

Stack tests were performed at several sites in each plant to measure the VOC mass flow rate. EPA Reference Method 1 was used to select the sampling locations, and Reference Method 2 was used to determine the volumetric flow rate. Method 3 was used to determine the molecular weight of the gas stream, and either Method 4 or a standard wet bulb/dry bulb procedure was used to determine moisture. Methods 2, 3, and 4 were combined to calculate the dry standard volumetric flow rate. These methods are identical to the ones recommended for this regulation.

The VOC concentration in each stack was determined by one of the following methods:

- Reference Method 25, "Determination of Total Gaseous Nonmethane Organic Emissions as Carbon;"
- Integrated bag samples analyzed by a flame ionization analyzer (BAG/FIA);[1] and
- Continuous concentration measurements by direct extraction and a flame ionization analyzer (FIA).[2]

Usually, the TGNMO method and one of the FIA methods were run simultaneously. The BAG/FIA method was used at sites in explosive atmospheres or remote locations. The direct extraction FIA method was used at convenient sites that were not in hazardous areas. The direct FIA was preferred because, with continuous measurements, minor process variations could be noted. The FIAs in both methods were usually calibrated with propane. When the TGNMO or BAG/FIA method was used, the VOC measurements were performed for three 45- to 60-minute runs, with volumetric flow measurements made before and after each VOC run.

The results from the two FIA methods should be equivalent. The TGNMO results differed somewhat from the results of the two FIA methods. The differences probably arose from the fact that the TGNMO procedure measures all carbon atoms equally, while the FIA detector has a varying response ratio for different organic compounds. The difference in results would be most pronounced if a multicomponent solvent mixture were used.

D.2 PERFORMANCE TEST METHODS

For the standards support study for the large appliance industry, performance test methods were needed in two areas: determination of the organic-solvent content of the coating, and determination of the overall

control efficiency of the add-on pollution control system. Furthermore, the test method for determining control efficiency may vary depending on the type of add-on control device used.

D.2.1. Analysis of Coatings

For the proposed large appliance regulation, the organic content of the coating must be determined in units of mass of VOCs per volume of coating solids. Four coating parameters are needed to calculate this value: weight fraction volatiles (Wv), weight fraction water (Ww), volume fraction solids (Vs), and coating density (Dc). These values may be obtained either from the coating manufacturer's formulation or from Reference Method 24, "Determination of Volatile Matter Content, Water Content, Density, Volume Solids, and Weight Solids of Surface Coating." Reference Method 24 combines several ASTM standard methods that determine the needed parameters. This reference method and the rationale leading to its selection are presented in another EPA document.[3]

The estimated cost of analysis per coating sample using Method 24 is $150. For aqueous coatings, an additional $100 per sample is required for water content determination. Because the testing equipment is standard laboratory apparatus, no additional purchasing costs are expected.

D.2.2 Efficiency of the Pollution Control System

If the amount of organic solvent in the coatings exceeds the standard, the overall efficiency of the entire vapor control system must be determined. This efficiency is determined by comparing the amount of solvent controlled (either recovered or destroyed) to the potential amount of solvent emitted with no controls. It should be noted that the overall system control efficiency is not the same as the efficiency of the individual vapor control device, because the overall efficiency considers the fugitive emissions that are not routed to the device. Only two types of vapor control devices--carbon adsorbers and incinerators--are expected to be used in the large appliance industry.

D.2.2.1 Carbon Adsorber Test Procedure. For carbon adsorbers, performance is demonstrated by comparing the organic solvent used versus the solvent recovered. This method is particularly easy and practical when a plant uses only one or two solvents and mixes its own coatings. When a solvent inventory system is used, it is necessary to monitor two things:

the amount of solvent used, and the amount of solvent recovered by the carbon adsorption system. The solvent may be measured either in terms of volume or mass. These data should be collected over a 1-month period to determine the efficiency of the carbon adsorber system. This time interval allows the test to be run with a representative variety of coatings and appliance products and reduces the impact of variations in the process that would otherwise affect the representativeness of a short-term test. It should be noted that this procedure determines the overall control efficiency based on the original amount of solvent used, not the amount entering the carbon adsorber, and fugitive emissions are allowed as long as the overall control efficiency meets the standard.

The additional cost of such a performance test should be minimal because the solvent inventory information is normally monitored by the plant. If not, the estimated purchase cost of two accurate liquid meters is $1,400.

D.2.2.2 Incinerator Test Procedure. Because incinerators destruct rather than recover the solvent, a different type of performance test is needed. The recommended procedure measures the mass of VOCs (as carbon) in the incinerator system vents (incinerator inlet, incinerator outlet, and fugitive emission vents), and determines the overall control efficiency of the system.

The recommended procedure for determining the mass of VOCs (as carbon) in the incinerator system vents uses a combination of several standard methods. EPA Reference Method 1 is used to select the sampling site. Reference Method 2 is used to measure the volumetric flow rate in the vent. Methods 3 and 4 are used to measure the molecular weight and moisture content in order to adjust the volumetric flow to dry standard conditions. The VOC concentration in the vent is measured by Reference Method 25, "Determination of Total Gaseous Nonmethane Organic Emissions as Carbon." The results from these methods are combined to give the mass of VOCs (as carbon) in the vent.

Three 1-hour runs of Reference Method 25 are recommended for a complete test, with Reference Methods 2, 3, and 4 performed at least twice during that period. Measurements at the inlet, outlet, and fugitive emission vents should be performed simultaneously. Although the actual testing time with Reference Method 25 is only 3 hours, the total time required for one

complete performance test is estimated at 8 hours, with an estimated overall cost of $4,000, plus $2,000 for each fugitive vent measured. During the performance test, the process should be operating normally. Because this test is short-term, the enforcement agency should consider the solvents and coatings used and the products being manufactured to ensure representativeness.

The TGNMO method was selected to measure the VOC concentration instead of one of the other methods discussed in Section D.1.2, "Stack Emission Test Methods." It is simpler to use, especially in explosive atmospheres or when high-temperature, moist streams are sampled. Also, because the detector used in Reference Method 25 measures all the nonmethane organics as methane, all carbon atoms give an equivalent instrument response. Therefore, the problem of varying response ratios for different organic compounds (typical of all flame ionization units) is avoided. A more detailed discussion of the TGNMO method and its advantages is presented in another EPA document.[3]

D.2.2.3 Comparison of Test Procedures. The decision to recommend two different performance test methods was made after several factors were considered. It is usually preferable to have the same performance test method regardless of the type of control device. In this case, the stack sampling procedure described for incinerators is also applicable to carbon adsorbers and may be used if preferred by the plant. However, the solvent inventory method is a far more practical and accurate procedure. It is inexpensive, requires no special technical sampling and analytical procedures, and has a test period of 1 month, so a representative variety of coatings can be tested. Unfortunately, an inventory-type method cannot be applied to incinerators. The 1-day TGNMO inlet and outlet stack test procedure is the best method for testing incinerators, but this method would become exorbitantly expensive and impractical if a longer test period were required. Thus, it was decided that the advantages of the solvent inventory-type test for carbon adsorbers outweigh the disadvantages of two different performance test methods with two different test periods.

There are important differences between the carbon adsorber and incinerator test procedures that should be noted. The test procedure for the carbon adsorber system relates the original amount of solvent used at the coating head to the amount of solvent controlled (recovered) by the

adsorber. It is possible to compare the two amounts because the same measurement method is used (liquid solvent used versus liquid solvent recovered). However, for incinerator systems, the amount of solvent used should not be directly related to the amount of solvent controlled (destructed), because different measurement procedures are used (solvent used is measured as a liquid, while solvent destructed is measured as gaseous VOCs). Thus, for incinerators, the amount controlled is determined by using the amount of VOCs measured in the inlet vent versus the outlet vent. The overall incinerator system control efficiency is determined by relating the amount destructed to all the potential uncontrolled emissions. To make the incinerator test procedure equivalent to the carbon adsorber test procedure, one must be able to measure all the potential emissions, both fugitive emissions and oven emissions ducted into the incinerator. That is, all fugitive VOC emissions from the coating area must be captured and vented through stacks suitable for testing. The alternatives are to completely enclose the coating area within the plant or to construct the facility so the building ventilation system captures all the fugitive emissions and ducts them into a testable stack.

D.3 MONITORING SYSTEMS AND DEVICES

The purpose of monitoring is to ensure that the emission control system is being properly operated and maintained after the performance test. One can either directly monitor the regulated pollutant, or instead, monitor an operational parameter of the emission control system. The aim is to select a relatively inexpensive and simple method that will indicate that the facility is in continual compliance with the standard.

For carbon adsorption systems, the recommended monitoring test is identical to the performance test. A solvent inventory record is maintained, and the control efficiency is calculated monthly. Excluding reporting costs, this monitoring procedure should not incur any additional costs for the affected facility because these process data are normally recorded and the liquid meters were already installed for the earlier performance test.

For incinerators, two monitoring approaches were considered:

- Directly monitoring the VOC content of the inlet, outlet, and fugitive vents so the monitoring test would be similar to the performance test; and

- Monitoring the operating temperature of the incinerator as an indicator of compliance.

The first alternative would require at least two continuous hydrocarbon monitors with recorders (about $4,000 each) and frequent calibration and maintenance. Instead, it is recommended that a record be kept of the incinerator temperature. The temperature level for indication of compliance should be related to the average temperature measured during the performance test. The averaging time for the temperature for monitoring purposes should be related to the time period for the performance test (in this case, 3 hours). Because a temperature monitor is usually included as a standard feature for incinerators, this monitoring requirement is not expected to incur additional costs for the plant. The cost of purchasing and installing an accurate temperature measurement device and recorder is estimated at $1,000.

D.4 REFERENCES

1. Feairheller, W. F. Measurement of Gaseous Organic Compound Emissions by Gas Chromatography. Monsanto Research Corporation. EPA Contract No. 68-02-2818. January 1978.

2. Alternative Test Method for Direct Measurement of Total Gaseous Organic Compounds Using a Flame Ionization Analyzer, in Measurement of Volatile Organic Compounds. OAQPS Guideline Series, EPA Report No. 450/2-78-041. October 1978.

3. Automobile and Light-Duty Truck Surface Coating Operations, Background Information for Proposed Standards. EPA Report No. 450/3-79-030. September 1979.

APPENDIX E

ENVIRONMENTAL, ENERGY, AND ECONOMIC IMPACTS--OTHER APPLIANCES

APPENDIX E

ENVIRONMENTAL, ENERGY, AND ECONOMIC IMPACTS--OTHER APPLIANCES

As noted in Chapter 1, the data in this document pertain to the surface coating of traditional large household appliances. The standards to be proposed include other appliances that were not the subject of the same type of detailed analyses as those contained in Chapters 6, 7, and 8. Consequently, the environmental, energy, and economic impacts that would result from imposition of the several regulatory alternatives on manufacturers of these other appliances cannot be projected with the same degree of certainty. For the following reasons, however, the impacts are expected to be similar both in direction and in proportion to those anticipated for the large appliance sector.

For prime coating operations, Regulatory Alternative A-1, to forego the development of an NSPS, would produce no environmental impacts--either beneficial or adverse. Likewise, because this alternative represents the status quo, it would not generate any energy or economic impacts. Regulatory Alternative A-II, promulgation of an NSPS equivalent to the assumed CTG limit, also would produce no measurable impacts. The intent of Regulatory Alternative A-II is twofold:

- To ensure that manufacturers attain a minimum level of coating application efficiency, and
- To provide some flexibility in the regulatory framework for complying with the standards.

The intent, then, is to allow a tradeoff between the solids content of the coating and transfer efficiency to achieve compliance.

Regulatory Alternative A-III, prime coating by electrodeposition (EDP), would not significatly reduce emissions because most of the added appliances are not designed to operate in extremely corrosive environments. Because these products may not require a high-quality interior prime coat, an EDP process may deposit more solids on the part than deemed

necessary, thereby mitigating the effect of the lower quantity of VOC emissions per volume of solids applied. As with the traditional appliances, eliminating the pretreatment dryoff oven would reduce energy consumption slightly. Wastewater Chemical Oxygen Demand (COD), however, would increase. Although there are instances where production parameters such as part size and shape and line speed could make EDP the lowest cost prime coating method, generally such a system is expected to cost somewhat more to install and operate than conventional spray, dip, or flow coating methods.

For topcoating operations, Regulatory Alternatives B-I and B-II are analagous to the prime coat alternatives, A-I and A-II, discussed above. Regulatory Alternative B-III, reduction of emissions to a level equivalent to that resulting from use of a 70-percent (vol.) solids top coat at a 60-percent transfer efficiency either through a solids content/transfer efficiency combination or through use of an incinerator on the topcoat oven, would reduce emissions proportionally to that described for large appliances. As with the large appliance sector, incineration would be a costly means of achieving a modest emissions reduction. The availability of 70 percent solids coatings for these other appliances is uncertain, particularly for low-volume products. Imposition of this alternative could therefore result in an adverse economic impact on operators who might be forced to install automatic application equipment to achieve transfer efficiencies of greater than 60 percent. This impact would be most noticeable on small operators. The energy, solid waste, and water pollution impacts of this alternative would be minimal.

Powder topcoats, Regulatory Alternative B-IV, would probably provide the lowest cost top coat while at the same time reducing energy consumption and eliminating VOC emissions. However, it is not known whether powder top coats have been adequately demonstrated for all of the additional appliances under all conditions. These coatings are expected to be adopted voluntarily, however, where practicable.

In summary, the environmental and energy impacts of imposing the several regulatory alternatives to the surface coating of selected appliances other than large household appliances, and the economic impacts of those alternatives on the manufacturers or consumers of these appliances, are similar enough to those described for the large appliance

sector that the rationale used to select the best demonstrated system of continuous emission reduction for large appliances will be applicable to the other appliances as well.

TECHNICAL REPORT DATA
(Please read Instructions on the reverse before completing)

1. REPORT NO. EPA-450/3-80-037a	2.	3. RECIPIENT'S ACCESSION NO.
4. TITLE AND SUBTITLE Industrial Surface Coating: Appliances - Background Information for Proposed Standards		5. REPORT DATE November 1980
		6. PERFORMING ORGANIZATION CODE
7. AUTHOR(S)		8. PERFORMING ORGANIZATION REPORT NO.
9. PERFORMING ORGANIZATION NAME AND ADDRESS Office of Air Quality Planning and Standards U.S. Environmental Protection Agency Research Triangle Park, NC 27711		10. PROGRAM ELEMENT NO.
		11. CONTRACT/GRANT NO. 68-02-3056
12. SPONSORING AGENCY NAME AND ADDRESS DAA for Air Quality Planning and Standards Office of Air, Noise, and Radiation U.S. Environmental Protection Agency Research Triangle Park, NC 27711		13. TYPE OF REPORT AND PERIOD COVERED Final
		14. SPONSORING AGENCY CODE EPA/200/04
15. SUPPLEMENTARY NOTES		

16. ABSTRACT

This document contains information used as the basis for developing proposed New Source Performance Standards for the appliance surface coating operations. The document includes an industry description, descriptions of model plants and regulatory alternatives considered, and environmental, energy, and economic impact analyses of the regulatory alternatives.

17. KEY WORDS AND DOCUMENT ANALYSIS

a. DESCRIPTORS	b. IDENTIFIERS/OPEN ENDED TERMS	c. COSATI Field/Group
Air pollution Pollution control Standards of performance Appliance Volatile organic compound Surface coating	Air Pollution Control	13B

18. DISTRIBUTION STATEMENT Unlimited	19. SECURITY CLASS *(This Report)* Unclassified	21. NO. OF PAGES 196
	20. SECURITY CLASS *(This page)* Unclassified	22. PRICE

EPA Form 2220-1 (Rev. 4-77) PREVIOUS EDITION IS OBSOLETE

United States
Environmental Protection
Agency

Office of Air, Noise, and Radiation
Office of Air Quality Planning and Standards
Research Triangle Park NC 27711

Publication No. EPA-450/3-80-037a

Official Business
Penalty for Private Use
$300

Postage and
Fees Paid
Environmental
Protection
Agency
EPA 335

If your address is incorrect, please change on the above label; tear off; and return to the above address.
If you do not desire to continue receiving this technical report series, CHECK HERE ☐ ; tear off label; and return it to the above address.