NAAQS Implementation Challenges:

The NAAQS Implementation Coalition Virtual Facilities NAAQS Study

August 13, 2015

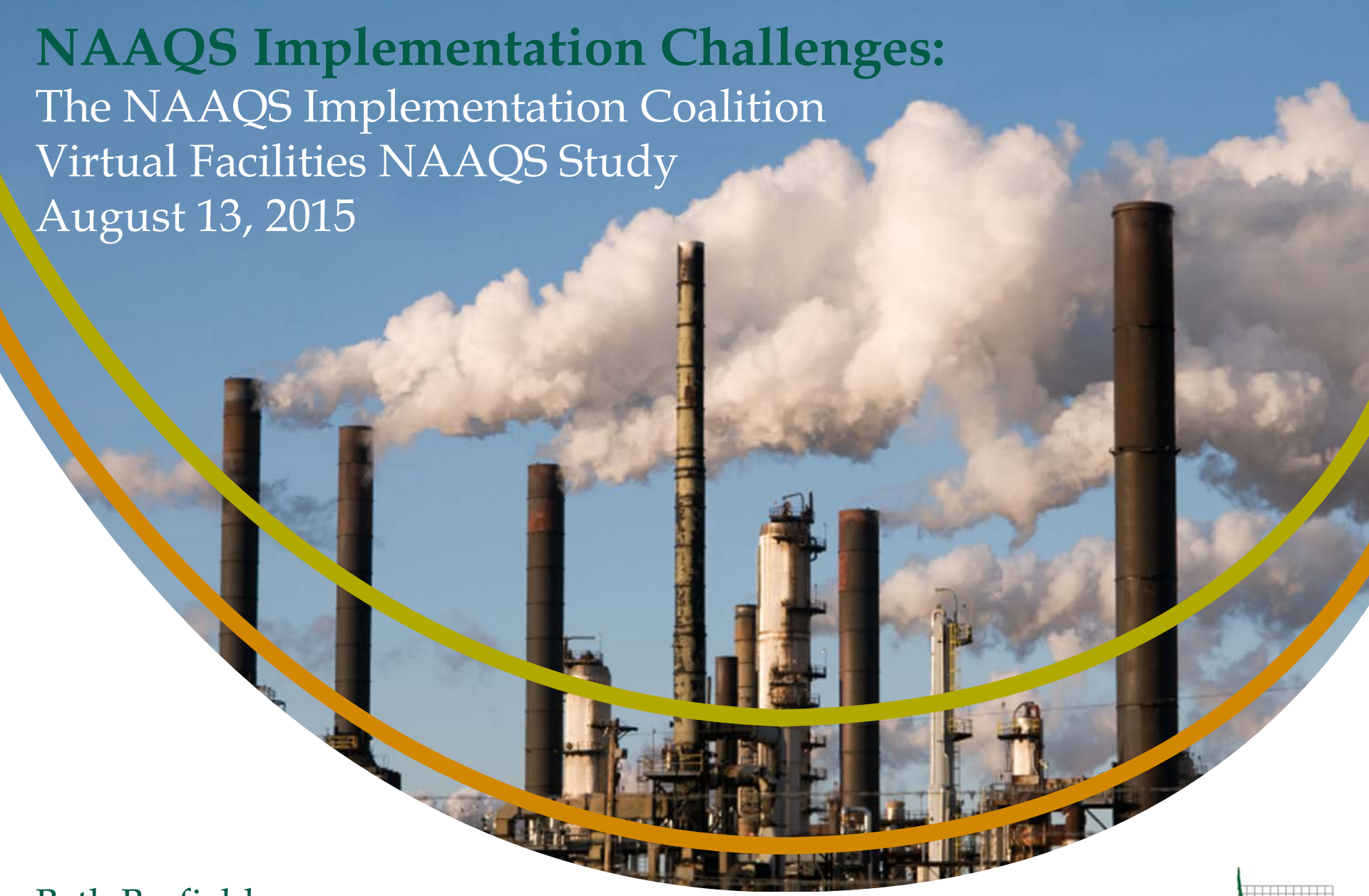

Beth Barfield

11th Conference on Air Quality Models

The world's leading sustainability consultancy

ERM

Study Objectives

- Demonstrate challenges modeling compliance with applicable NAAQS using current EPA modeling techniques and guidance
- Identify key technical and policy issues to focus attention for Appendix W revision in 2015

NAAQS Implementation Coalition (NIC)

This study was funded by the NAAQS Implementation Coalition (NIC) which is comprised of trade associations, companies, and other entities who confront the challenges in the permitting of their facilities under increasingly stringent NAAQS.

CORN REFINERS ASSOCIATION

AMERICAN WOOD COUNCIL

NMA THE AMERICAN RESOURCE

NOPA NATIONAL OILSEED PROCESSORS ASSOCIATION

UARG

Utility Air Regulatory Group

American Forest & Paper Association

Study Recommendations

- Representation of background concentrations must be reasonable to account for significant variability and the low likelihood they would be paired in time with peak impacts from a modeled source.
- Designation of modeling refinements for low wind speeds and stable conditions as "non-default, beta" options should be removed.
- Refined modeling techniques for NO_2 that are considered "non-default, beta" (such as ARM2) or otherwise "non-default" (such as OLM and PVMRM) and that require case-by-case approval must be a priority for general approval.

The world's leading sustainability consultancy

ERM

Outline

- General Approach
- Development of Virtual Sources and Model Input Parameters
- Results Supporting the Study Recommendations and EPA Proposed Revisions to Appendix W

ERM

Approach and Guidance

Utilize current regulatory modeling techniques and default, commonly accepted approaches following EPA guidance

- *Guideline on Air Quality Models* – 40 CFR Part 51, Appendix W, Revised November 9, 2005
- "AERMOD Implementation Guide," Revised March 19, 2009
- "Modeling Procedures for Demonstrating Compliance with PM2.5 NAAQS," March 23, 2010
- "Applicability of Appendix W Modeling Guidance for the 1-hour NO_2 NAAQS," June 28, 2010
- "Applicability of Appendix W Modeling Guidance for the 1-hour SO_2 NAAQS," August 23, 2010
- "Additional Clarification Regarding Application of Appendix W Modeling Guidance for the 1-hour NO_2 NAAQS," March 1, 2011
- "Draft Guidance for PM2.5 Modeling," March 4, 2013
- "Use of AERMOD Meteorological Data in AERMOD Dispersion Modeling," March 8, 2013
- "AQMG / Model Clearinghouse statement concerning the AERMET/AERMOD (version 12345) BETA options," June 26, 2013

Did *not* utilize highly refined techniques that would require case-by-case approval or exceedingly specific permit limitations

Simulate typical, not extreme analysis

Representative Facility Design

- Design three hypothetical facilities
  - Generalized to remove any identifying characteristics
  - Representative of larger class of operations by emission rates and stack parameters
  - Simulate typical, average size, well-controlled operations
    1. Gas-fired EGU
    2. Gas-fired refinery (generally representative of petrochemicals)
    3. Industrial manufacturing (generally representative of a wide variety of facilities including, consumer products and commodity manufacturing, facilities with significant bulk raw material handling, and a variety of processing operations)

The study authors and sponsors are not aware of any plans to actually propose or construct the hypothetical facilities or other facilities in the areas evaluated in this study

EGU Layout

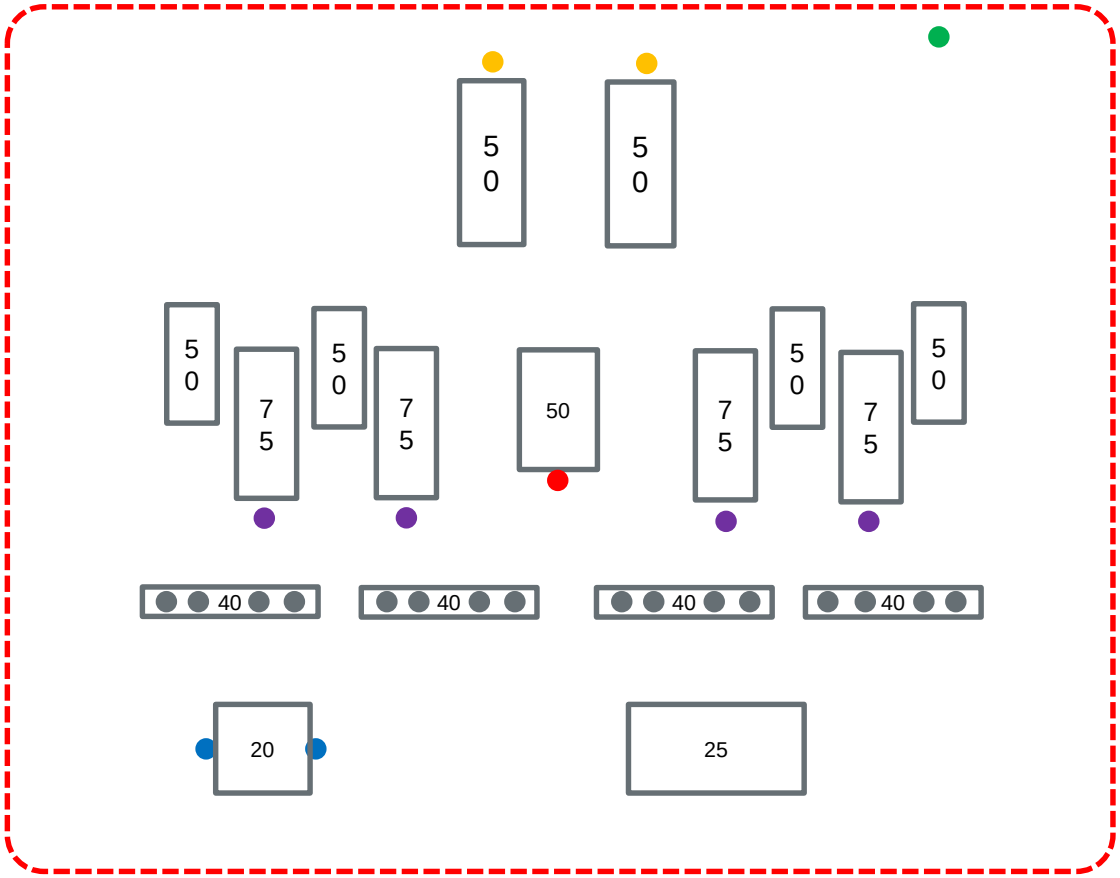

- Turbine/HRSG
- Turbine
- Gas Heater
- RICE
- Auxiliary Boiler
- Cooling Towers
- Building

ERM

Refinery Layout

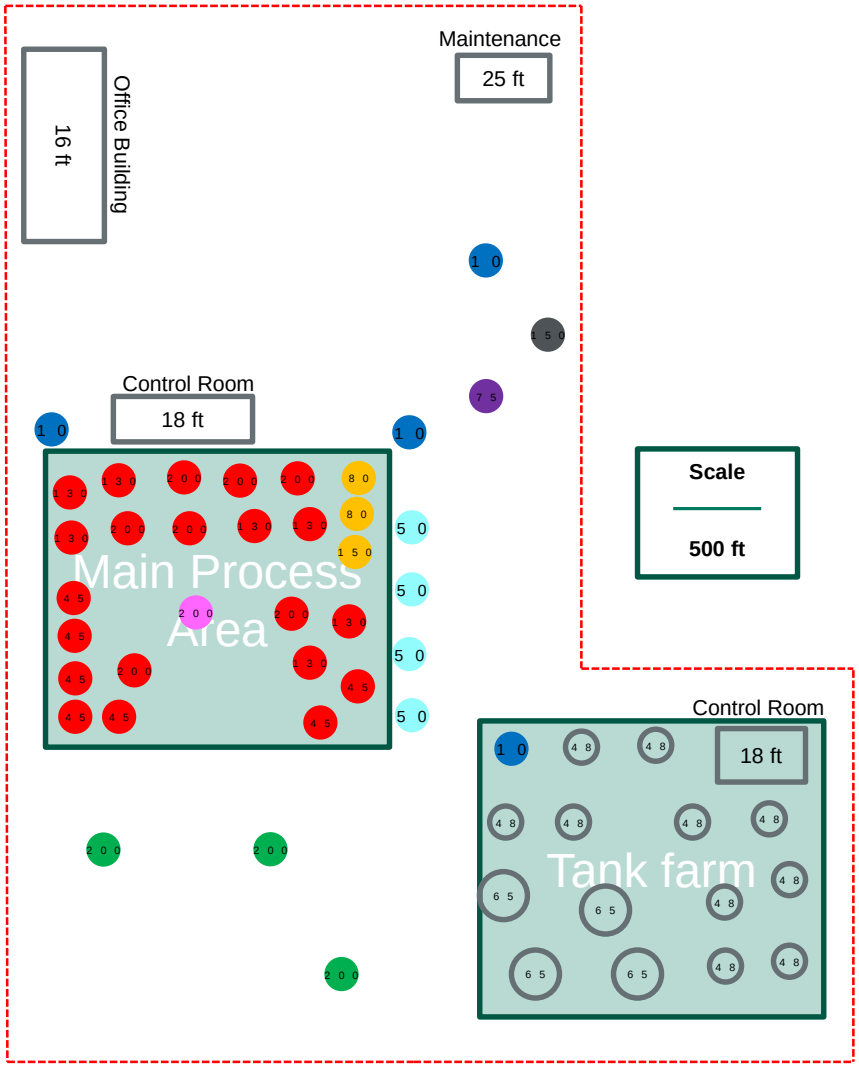

- Process Heater
- Boiler
- Engine
- Flare
- FCCU
- SRU
- Decoking
- Cooling Tower
- Tanks and Buildings (height indicated in ft)

Manufacturing Layout

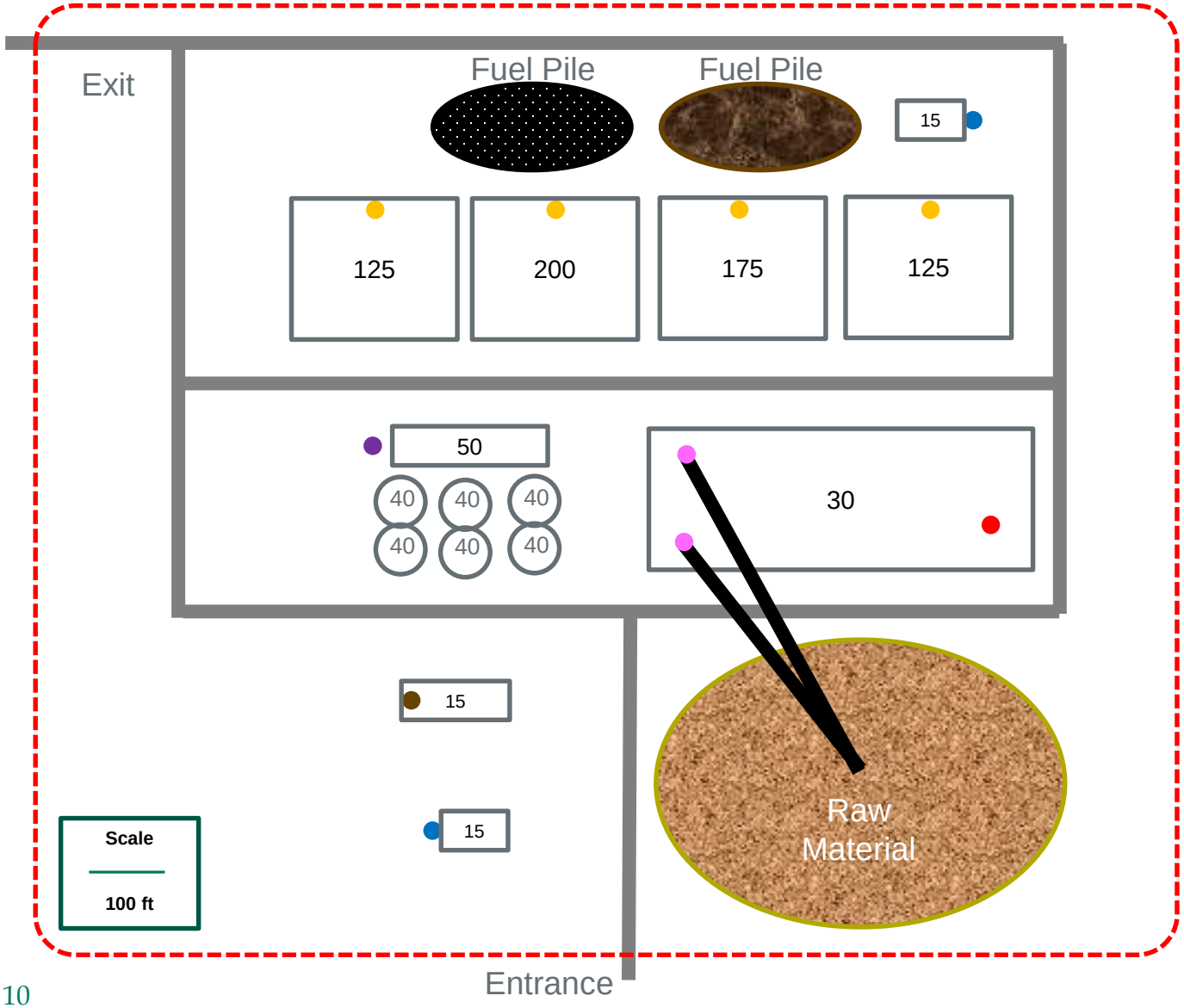

- Process Fugitive
- Boiler
- RICE
- Process Combustion
- Material Transfer
- Material Processing
- Building/Tank
- Road

Site Locations

Selected three locations to examine impacts of meteorology, geography, ambient background

1. Louisiana (flat terrain)
2. Montana (valley with surrounding complex terrain)
3. North Carolina (rolling to complex terrain)

The study authors and sponsors are not aware of any plans to actually propose or construct the hypothetical facilities or other facilities in the areas evaluated in this study

Louisiana Sites (Lettsworth)

ERM

Montana Sites (Missoula)

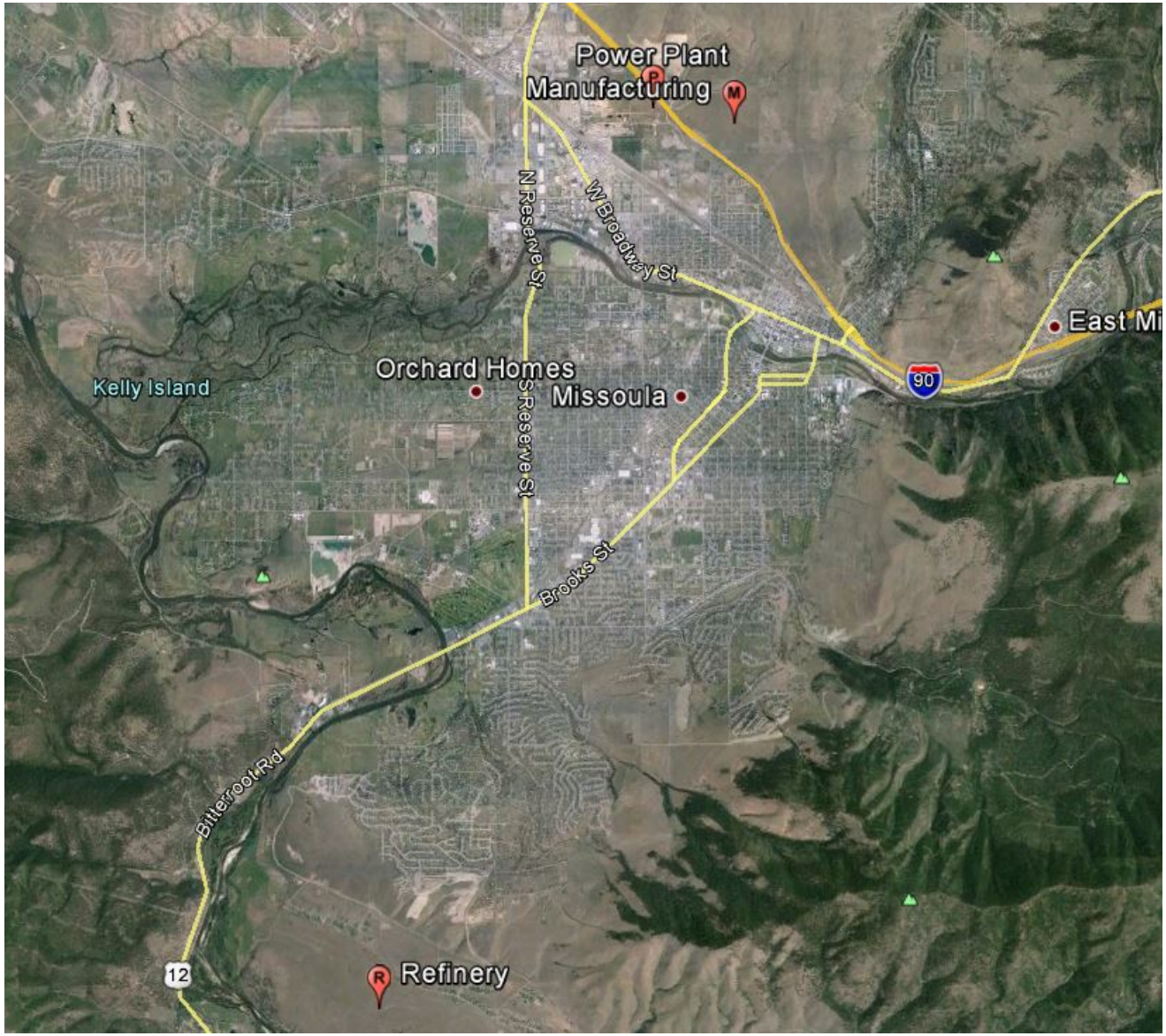

ERM

North Carolina Sites (King's Mountain)

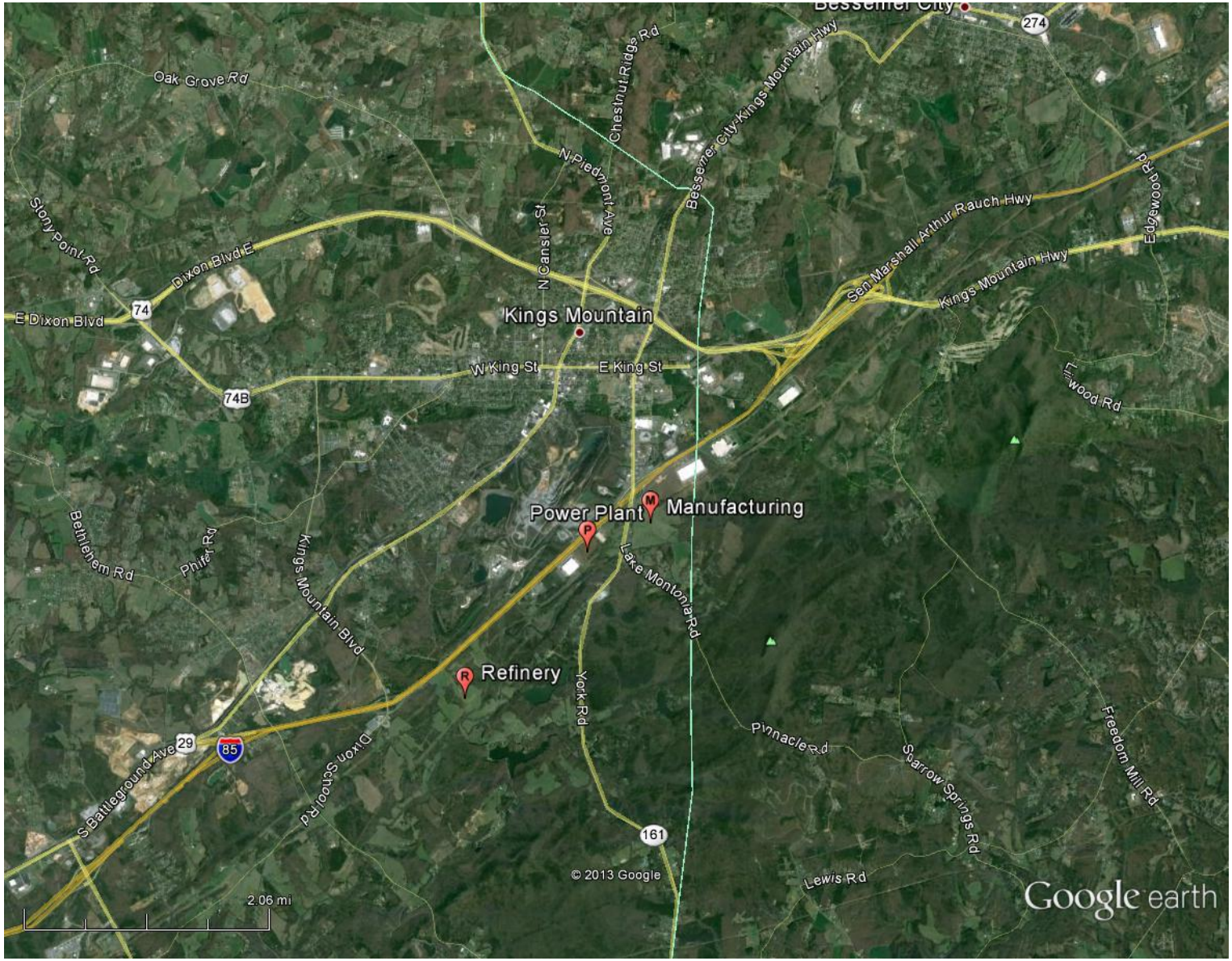

ERM

Determining Background Concentrations

- *8.3.2 c. iii. For short-term standards, the diurnal or seasonal patterns of the air quality monitoring data may differ significantly from the patterns associated with the modeled concentrations. When this occurs, it may be appropriate to pair the air quality monitoring data in a temporal manner that reflects these patterns (e.g., pairing by season and/or hour of day).*

Temporal Pairing of Background Monitoring Data

Comparison of First and Second Tier Design Values ($\mu g/m^3$)

Pollutant	Averaging Period	Design Value	Seasonal/ hourly DV
$PM_{2.5}$	24 Hour	21.6	20.2
NO_2	1 hour	79.0	46.5
SO_2	1 hour	36.6	11.3

The world's leading sustainability consultancy

ERM

Modifications to the AERMOD System

- *A proposed option incorporated in AERMET to adjust the surface friction velocity (u*) to address issues with AERMOD model overprediction under stable, low wind speed conditions.*
- *A proposed low wind option in AERMOD to address issues with model overprediction under low wind speed conditions.*

The world's leading sustainability consultancy

ERM

$PM_{2.5}$ – Fugitive Emissions and Low Winds Speeds

Roads and low-level fugitive emissions contribute most to impact and are most vulnerable to wind speed effects

- 24-hour average – cumulative impact (no background)

All	Default	LOWWIND1 (ADJ_U*)	LOWWIND2 (ADJ_U*)
North Carolina	44.1	47.7	44.5
Montana	122.3	126.9	91.7
Louisiana	39.6	44.0	38.6

- 24-hour average – fugitive emissions (roads)

Roads	Default	LOWWIND1 (ADJ_U*)	LOWWIND2 (ADJ_U*)
North Carolina	21.0	15.5	12.4
Montana	25.4	19.2	16.9
Louisiana	29.9	21.6	16.5

All modeled concentrations reported in micrograms per cubic meter ($\mu g/m^3$)

$PM_{2.5}$ – Annual Average and Low Winds Speeds

Common differences among low wind speed options regardless of location

- Annual average – cumulative impacts (no background)

All	Default	LOWWIND1 (ADJ_U*)	LOWWIND2 (ADJ_U*)
North Carolina	15.8	15.0	15.0
Montana	38.0	33.5	32.8
Louisiana	15.1	13.5	13.2

- Annual average – haul roads

All	Default	LOWWIND1 (ADJ_U*)	LOWWIND2 (ADJ_U*)
North Carolina	7.8	5.9	5.2
Montana	11.0	7.6	7.1
Louisiana	12.8	9.0	8.1

All modeled concentrations reported in micrograms per cubic meter ($\mu g/m^3$)

$PM_{2.5}$ – Stack Emissions and Low Winds Speeds

Effect of low wind speed options vary by location

Source	Montana		Louisiana		North Carolina	
	Default	LOWWIND2	Default	LOWWIND2	Default	LOWWIND2
E_CC1	4.5	1.3	0.8	0.8	1.9	1.0
E_CC2	4.6	1.3	0.8	0.8	2.0	1.0
E_CC3	4.8	1.3	0.9	0.8	2.0	1.2
E_CC4	5.0	1.3	0.8	0.8	1.9	1.1
E_SC1	0.3	0.1	0.03	0.03	0.1	0.05
E_SC2	0.3	0.1	0.04	0.04	0.1	0.05

All modeled concentrations reported in micrograms per cubic meter ($\mu g/m^3$)

The world's leading sustainability consultancy

ERM

Models for Nitrogen Dioxide

- *Federal Register Preamble: "For the Tier 2 technique, the EPA is proposing to replace the existing ARM with a revised Ambient Ratio Method 2 (ARM2)."*
- *4.2.3.4.d. "The national default for ARM2 will include a minimum NO_2/NO_X ratio of 0.5 and a maximum ratio of 0.9."*
- *4.2.3.4.d. "The reviewing agency may establish alternative default minimum NO_2/NO_X values based on the source's in-stack emissions ratios"*

1-hour NO_2 – Refined Methods

Higher Tier (ARM2/OLM/PVMRM) options important at all locations

Model Tier	North Carolina	Montana	Louisiana
Tier 1	**956.9**	**1433.9**	**1012.6**
Tier 2 ARM	**765.5**	**1146.6**	**810.0**
Tier 2 ARM2	**193.9**	**286.7**	**202.5**
Tier 3 PVMRM	**335.8**	**493.1**	**328.7**
Tier 3 OLM	**307.5**	**419.6**	**297.6**

All modeled concentrations reported in micrograms per cubic meter ($\mu g/m^3$)

- Need streamlined acceptance:
  - Ozone data sets
  - NO_2/NOx ISR
  - Case by Case approval by regulating agencies

Summary

- Support EPA's revised recommendations on how to determine background concentrations to account for significant variability and the low likelihood they would be paired in time with peak impacts from a modeled source.
- Support the designation of modeling refinements for low wind speeds and stable conditions as default options in AERMET and AERMOD.
- Support the approval of refined modeling techniques for NO2 (such as ARM2, OLM and PVMRM) for general use.

The world's leading sustainability consultancy

ERM

Questions and Contacts

Today's Presenter

Beth Barfield, ERM
Raleigh, NC
beth.barfield@erm.com

(919) 233-4501

Co-Authors

Richard Hamel, ERM
Boston, MA
Richard.hamel@erm.com
(617) 646-7826

Mark Garrison ERM
Philadelphia, PA
mark.garrison@erm.com
(484) 913-0369