United States
Environmental Protection
Agency

Office of Air Quality
Planning and Standards
Research Triangle Park NC 27711

EPA-450/3-91-022a
November 1991

Air

EPA

Technical Guidance - Stage II Vapor Recovery Systems for Control of Vehicle Refueling Emissions at Gasoline Dispensing Facilities

Volume I: Chapters

EPA
450/3
91-022a

copy 1

EPA-450/3-91-022a

Technical Guidance -

Stage II Vapor Recovery Systems for Control of Vehicle Refueling Emissions at Gasoline Dispensing Facilities

Volume I: Chapters

Emission Standards Division

U.S. ENVIRONMENTAL PROTECTION AGENCY
Office of Air and Radiation
Office of Air Quality Planning and Standards
Research Triangle Park, North Carolina 27711
November 1991

This report has been reviewed by the Emission Standards Division of the Office of Air Quality Planning and Standards, EPA, and approved for publication. Mention of trade names or commercial products is not intended to constitute endorsement or recommendation for use.

Copies of this report are available, as supplies permit through the Library Services Office (MD-35), U.S. Environmental Protection Agency, Research Triangle Park NC 27711, (919) 541-2777, or for a nominal fee, from National Technical Information Services, 5285 Port Royal Road, Springfield VA 22161, (703) 487-4650.

TABLE OF CONTENTS

VOLUME I

		Page
CHAPTER 1.0	INTRODUCTION	1-1
	1.1 Background	1-2
	1.2 Clean Air Act Requirements	1-3
	1.3 Organization of Report	1-9
	1.4 References	1-11
CHAPTER 2.0	INDUSTRY DESCRIPTION	2-1
	2.1 Industry Description	2-1
	2.2 Industry Population and Size Distribution	2-4
	2.3 Model Plants	2-28
	2.4 Summary	2-30
	2.5 References	2-31
CHAPTER 3.0	SOURCES OF EMISSIONS	3-1
	3.1 General	3-1
	3.2 Emission Sources	3-6
	3.3 Factors Influencing Emissions	3-11
	3.4 Emission Factor Calculations	3-15
	3.5 Model Plant Emission Estimates	3-29
	3.6 References	3-32
CHAPTER 4.0	CONTROL TECHNOLOGY	4-1
	4.1 Types of Stage II Systems	4-2
	4.2 System Components	4-11
	4.3 California Certification Program	4-33
	4.4 In-Use Effectiveness	4-46
	4.5 References	4-56

TABLE OF CONTENTS (Concluded)

CHAPTER 5.0	STAGE II COSTS	5-1
	5.1 Equipment, Installation and Annual Costs	5-3
	5.2 Model Plant Costs	5-16
	5.3 Comparison of Recent Cost Studies	5-17
	5.4 Current Costs of Stage II Systems	5-22
	5.5 References	5-34
CHAPTER 6.0	PROGRAM IMPLEMENTATION	6-1
	6.1 Planning	6-2
	6.2 Regulations	6-7
	6.3 Permitting	6-12
	6.4 Inspections	6-22
	6.5 Summary	6-32
	6.6 References	6-35

VOLUME II

APPENDIX A	LUNDBERG SURVEY INCORPORATED INDIVIDUAL COUNTY SIZE DISTRIBUTION	A-1
APPENDIX B	STAGE II FACILITY COSTS	B-1
APPENDIX C	CALIFORNIA AIR RESOURCES BOARD STAGE II (PHASE II) CERTIFICATION TEST PROCEDURES	C-1
APPENDIX D	CALIFORNIA AIR RESOURCES BOARD EXECUTIVE ORDERS	D-1
APPENDIX E	ILLUSTRATIVE EXAMPLE OF IN-USE EFFICIENCY CALCULATION PROCEDURES	E-1
APPENDIX F	STAGE II PROGRAM SUMMARIES	F-1
APPENDIX G	PUBLIC AWARENESS INFORMATION	G-1
APPENDIX H	STAGE II REGULATIONS	H-1
APPENDIX I	PERMITTING INFORMATION	I-1
APPENDIX J	STAGE II TEST METHODS	J-1
APPENDIX K	INSPECTION INFORMATION	K-1

LIST OF FIGURES

Figure		Page
2-1	Gasoline Marketing in the United States	2-2
2-2	Comparison of Los Angeles Average Service Station Size to MPSI Data	2-22
2-3	Comparison of EPA Nationwide, Sierra Los Angeles, and Lundberg Retail Service Station Size Distributions	2-25
3-1	Uncontrolled Service Station Operations	3-7
3-2	Controlled Service Station Operations (Stage I and Stage II)	3-8
3-3	Region Boundaries	3-17
4-1	Vapor Balance System	4-3
4-2	Hasstech Assist System	4-5
4-3	Hirt Assist System	4-7
4-4	Healy Assist System	4-8
4-5	Amoco Bellowless Nozzle System	4-10
4-6	Example Balance Nozzles	4-12
4-7	Example Assist Nozzle	4-13
4-8	Example Bellowless Nozzle	4-14
4-9	High Hang Hose Configurations	4-25
4-10	Example Liquid Removal Device	4-27
4-11	Example Emergency Breakaway	4-28
4-12	Individual Vapor Balance System Underground Piping	4-29
4-13	Manifolded Balance System Underground Piping	4-31
4-14	Relationship of Inspection Frequency to Program In-Use Efficiency	4-51
4-15	Relationship of Inspection Frequency to Program In-Use Efficiency with Exemptions	4-54
5-1	Comparison of Installed Capital Costs Lines Based on Data Point Averages	5-20
5-2	Comparison of Installed Capital Costs Lines Based on Linear Regression	5-21
5-3	Comparison of Annual Costs Lines Based on Data Point Averages	5-24
5-4	Comparison of Normalized Annual Costs Lines Based on Linear Regression	5-25

LIST OF TABLES

Table		Page
1-1	OZONE NONATTAINMENT AREAS CLASSIFIED MODERATE OR ABOVE	1-5
2-1	MONTHLY STATE GASOLINE CONSUMPTION FOR 1990	2-6
2-2	GASOLINE THROUGHPUT PERCENTAGES OF NATIONAL TOTAL FOR OZONE NONATTAINMENT AREAS CLASSIFIED MODERATE OR ABOVE	2-8
2-3	ESTIMATED GASOLINE CONSUMPTION BY STATE FOR MODERATE AND ABOVE OZONE NONATTAINMENT AREAS	2-9
2-4	ESTIMATED 1990 RETAIL SERVICE STATION POPULATION	2-13
2-5	ESTIMATED PRIVATE SERVICE STATION POPULATION	2-16
2-6	NATIONWIDE RETAIL SERVICE STATION DISTRIBUTION ESTIMATED BY EPA	2-18
2-7	1990 MPSI MARKET SHARE BREAKDOWN	2-20
2-8	LOS ANGELES RETAIL SERVICE STATION DISTRIBUTION REPORTED BY SIERRA RESEARCH	2-21
2-9	RETAIL SERVICE STATION DISTRIBUTION BASED ON LUNDBERG DATA FROM 16 METROPOLITAN AREAS	2-24
2-10	CONSUMPTION DISTRIBUTION FOR NATIONWIDE AND METROPOLITAN AREA SCENARIOS	2-26
2-11	ESTIMATED PERCENTAGE OF RETAIL STATIONS THAT ARE INDEPENDENTS BY THROUGHPUT CLASSIFICATION	2-26
2-12	SERVICE STATION MODEL PLANTS AND NATIONWIDE POPULATIONS	2-29
3-1	EXAMPLE COMPOSITION OF GASOLINE VAPORS	3-3
3-2	GASOLINE HAZARDOUS AIR POLLUTANT VAPOR PROFILE	3-5
3-3	1992 AND BEYOND RVP LIMITS BY MONTH AND BY GEOGRAPHIC LOCATION	3-13
3-4	MONTHLY AVERAGE DISPENSED LIQUID TEMPERATURE	3-16
3-5	SEASONAL VARIATION FOR TEMPERATURE DIFFERENCE BETWEEN DISPENSED FUEL AND VEHICLE FUEL TANK (ΔT), °F	3-18

LIST OF TABLES (Concluded)

3-6	MONTHLY AND GEOGRAPHIC VARIATIONS IN REFUELING EMISSION FACTOR	3-20
3-7	SUMMARY OF STAGEII/CONVENTIONAL REFUELING SPILLAGE DATA	3-24
3-8	VOC EMISSIONS FROM REFUELING OPERATIONS FOR SERVICE STATION MODEL PLANTS	3-30
4-1	SUMMARY OF CARB EXECUTIVE ORDERS CERTIFYING SYSTEMS TO BE AT LEAST 95 PERCENT EFFICIENT	4-44
4-2	EFFICIENCY DECREASES ASSOCIATED WITH STAGE II BALANCE SYSTEM DEFECTS	4-49
4-3	PERCENT CONSUMPTION EXCLUDED WITH VARIOUS STAGE II EXEMPTION SCENARIOS	4-55
5-1	PURCHASE COSTS FOR VAPOR RECOVERY NOZZLES AND REPLACEMENT PARTS (May 1991 Dollars)	5-6
5-2	TYPICAL VAPOR RECOVERY HOSE COSTS (May 1991 Dollars)	5-9
5-3	TYPICAL COSTS OF OTHER VAPOR RECOVERY COMPONENTS (May 1991 Dollars)	5-9
5-4	PIPING COMPONENT DIFFERENCES BETWEEN INDIVIDUAL AND MANIFOLDED BALANCE SYSTEM	5-12
5-5	TYPICAL VAPOR PIPING COSTS FOR 65,000 GALLON PER MONTH SERVICE STATION	5-13
5-6	ACTIONS TAKEN IN RESPONSE TO FINDING A LEAK IN AN UNDERGROUND TANK SYSTEM	5-15
5-7	SUMMARY OF STAGE II SYSTEM CAPITAL COST ESTIMATES FROM ALL SOURCES	5-19
5-8	SUMMARY OF NORMALIZED STAGE II SYSTEM ANNUAL COST ESTIMATES FROM ALL SOURCES	5-23
5-9	SUMMARY OF COST ITEMS CHANGED IN APPENDIX B COST MODEL TO OBTAIN 1991 COSTS	5-27
5-10	1991 STAGE II BALANCE SYSTEM CAPITAL COST	5-29
5-11	1991 STAGE II BALANCE SYSTEM ANNUAL COST	5-30
5-12	COST EFFECTIVENESS OF 1991 STAGE II BALANCE SYSTEMS	5-31
5-13	PROGRAM COST EFFECTIVENESS COMPARED TO EXEMPTION LEVEL	5-33
6-1	SUMMARY OF STAGE II PROGRAM EXEMPTION LEVELS AND COMPLIANCE SCHEDULES	6-13
6-2	PHASE II INSPECTION PROCEDURES	6-23
6-3	MASSACHUSETTS STAGE II VIOLATIONS	6-33

1.0 INTRODUCTION

The Clean Air Act Amendments (CAAA) of 1990 require the installation of Stage II vapor recovery systems in many ozone nonattainment areas and direct EPA to issue guidance as appropriate on the effectiveness of Stage II systems. This document provides guidance on the effectiveness of Stage II systems and other Stage II technical information.

Stage II vapor recovery on vehicle refueling is an effective control technology to reduce gasoline vapor emissions that contain volatile organic compounds (VOC) and hazardous air pollutants. Vehicle refueling emissions consist of the gasoline vapors displaced from the automobile tank by dispensed liquid gasoline. The Stage II system collects these vapors at the vehicle fillpipe and returns them to the underground storage tank. Without vapor recovery, the dispensing of gasoline causes the introduction of fresh air into the storage tank. Liquid gasoline then evaporates until liquid/vapor equilibrium is attained. Stage II systems return saturated vapors to the storage tank thus preventing this evaporation and actually saving gasoline.

The purpose of this document is to provide information and guidance to State and local agencies related to the planning, permitting, and implementation of Stage II vapor recovery programs. While the subject of enforcement is introduced in this document, more detailed information and guidance for enforcement programs are provided under separate cover in the EPA's "Enforcement Guidance for Stage II Programs" to be issued concurrently with this document.

The information and guidance provided in this technical document is not intended to establish a binding norm or a final determination of issues or policies. Decisions on issues and policies will be made during the development, submittal, and review process on each individual State Implementation Plan.

1.1 BACKGROUND

Stage II vapor recovery has been a part of VOC emission control in California for some time. Since the introduction of Stage II in California in the early 1970s, this program has become one of California's major VOC control strategies. Seventeen districts in California contain areas which are classified nonattainment for ozone and have Stage II programs that have been in effect for over a decade. It is estimated that in California, Stage II vapor recovery systems reduce hydrocarbon emissions by 48,000-56,000 tons annually, and save 15-18 million gallons of gasoline.[1,2] The remaining districts in California have also recently adopted hazardous air pollutant regulations requiring Stage II vapor recovery for control of benzene emissions.

Other areas of the country have also established Stage II vapor recovery programs. The District of Columbia implemented a Stage II program in the early 1980s and Missouri adopted vehicle refueling regulations in the St. Louis area in the late 1980s. In the late 1980s and early 1990s, several other States and local agencies adopted Stage II programs. These agencies currently include New Jersey, New York (New York City metropolitan area), Massachusetts, Philadelphia, Washington, Oregon, and Dade County, Florida. These programs range from ones that are well into the implementation and enforcement period to those in the initial stages. A number of additional areas are also considering Stage II regulations.

1.2 CLEAN AIR ACT REQUIREMENTS

The requirements in the CAAA of 1990 regarding Stage II vapor recovery are contained in Title I: Provisions for Attainment and Maintenance of National Ambient Air Quality Standards. A key element of this title is that it "classifies" areas with similar pollution levels. The purpose of this classification system is to match pollution control requirements with the severity of an area's air quality problem. For ozone, there are five classes: marginal, moderate, serious, severe, and extreme. Marginal areas are subject to the least stringent requirements and each subsequent classification is subject to more stringent requirements. Areas in the higher classes must meet requirements of all the areas in lower classifications plus the additional requirements of their class.

Subject to the provisions of Section 202, Stage II vapor recovery is required for moderate areas, and thus is required for all areas classified as serious, severe, or extreme. Section 182(b) of the CAAA of 1990 contains requirements for moderate areas and section 182(b)(3) specifically addresses gasoline vapor recovery.

> (3) GASOLINE VAPOR RECOVERY.
>
> (A) GENERAL RULE.-Not later than 2 years after the date of the enactment of the Clean Air Act Amendments of 1990, the State shall submit a revision to the applicable implementation plan to require all owners or operators of gasoline dispensing systems to install and operate, by the date prescribed under subparagraph (B), a system for gasoline vapor recovery of emissions from the fueling of motor vehicles. The Administrator shall issue guidance as appropriate as to the effectiveness of such system. This subparagraph shall apply only to facilities which sell more than 10,000 gallons of gasoline per month (50,000 gallons per month in the case of an independent small business marketer of gasoline as defined in section 325).
>
> (B) EFFECTIVE DATE - The date required under subparagraph (A) shall be-

(i) 6 months after the adoption date, in the case of gasoline dispensing facilities for which construction commenced after the date of the enactment of the Clean Air Act Amendments of 1990;

(ii) one year after the adoption date, in the case of gasoline dispensing facilities which dispense at least 100,000 gallons of gasoline per month, based on average monthly sales for the 2-year period before the adoption date; or

(iii) 2 years after the adoption date, in the case of all other gasoline dispensing facilities.

Any gasoline dispensing facility described under both clause (i) and clause (ii) shall meet the requirements of clause (i).

(C) REFERENCE TO TERMS - For purposes of this paragraph, any reference to the term 'adoption date' shall be considered a reference to the date of adoption by the State of requirements for the installation and operation of a system for gasoline vapor recovery of emissions from the fueling of motor vehicles.

Using nonattainment designations based on 1987-1989 design values or a few areas based on 1988-90 design values, these requirements would affect 56 metropolitan areas in the United States. A breakdown of these areas by classification is 32 moderate, 14 serious, 9 severe, and 1 extreme. The areas are shown in Table 1-1.

In addition, Title 1, section 184, Control of Interstate Ozone Air Pollution, creates an ozone transport region comprised of the States of Connecticut, Delaware, Maine, Maryland, Massachusetts, New Hampshire, New Jersey, New York, Pennsylvania, Rhode Island, and Vermont, and the CMSA that includes the District of Columbia.

TABLE 1-1. OZONE NONATTAINMENT AREAS CLASSIFIED MODERATE OR ABOVE

Extreme

Los Angeles-South Coast Air Basin, CA

Severe

Baltimore, MD
Chicago-Gary-Lake County, IL-IN
Houston-Galveston-Brazoria, TX
Milwaukee-Racine, WI
New York-N New Jer-Long Is., NY-NJ-CT
Philadelphia-Wilm-Trent, PA-NJ-DE-MD
San Diego, CA
Southeast Desert Modified AQMA, CA
Ventura Co, CA

Serious

Atlanta, GA
Baton Rouge, LA
Beaumont-Port Arthur, TX
Boston-Lawrence-Worcester (E.MA), MA-NH
El Paso, TX
Greater Connecticut
Muskegon, MI
Portsmouth-Dover-Rochester, NH
Providence (All RI), RI
Sacramento Metro, CA
San Joaquin Valley, CA
Sheboygan, WI
Springfield (Western MA), MA
Washington, DC-MD-VA

Moderate

Atlantic City, NJ
Charleston, WV
Charlotte-Gastonia, NC
Cincinnati-Hamilton, OH-KY
Cleveland-Akron-Lorain, OH
Dallas-Fort Worth, TX
Dayton-Springfield, OH
Detroit-Ann Arbor, MI
Grand Rapids, MI
Greensboro-Winston Salem-High Point, NC
Huntington-Ashland, WV-KY
Kewaunee Co, WI
Knox & Lincoln Cos, ME
Lewiston-Auburn, ME
Louisville, KY-IN
Manitowoc Co, WI
Miami-Fort Lauderdale-W. Palm Beach, FL
Monterey Bay, CA
Nashville, TN
Parkersburg, WV
Phoenix, AZ
Pittsburgh-Beaver Valley, PA
Portland, ME
Raleigh-Durham, NC
Reading, PA
Richmond-Petersburg, VA
Salt Lake City, UT
San Francisco-Bay Area, CA
Santa Barbara-Santa Maria-Lompoc, CA
St Louis, MO-IL
Toledo, OH

Source: 56 Federal Register 56692, 40 CFR 81, Air Quality Designations; Final Rule. November 6, 1991.

The requirements for this region also include provisions related to Stage II, in section 184(b)(2).

> (2) Within 3 years after the date of the enactment of the Clean Air Act amendments of 1990, the Administrator shall complete a study identifying control measures capable of achieving emission reductions comparable to those achievable through vehicle refueling controls contained in section 182(b)(3), and such measures or such vehicle refueling controls shall be implemented in accordance with the provisions of this section. Notwithstanding other deadlines in this section, the applicable implementation plan shall be revised to reflect such measures within 1 year of completion of the study.

In summary, all of the States in the transport region will be required to implement Stage II controls or controls determined by EPA to achieve comparable emission reductions.

Another portion of the Amendments with potential impacts on the implementation of Stage II in moderate areas is contained in Title 2: Provisions Relating to Mobile Sources. Section 202, Control of Vehicle Refueling Emissions, deals with the control of vehicle refueling emissions using "onboard" systems. Onboard vapor control systems consist of activated carbon canisters installed on the vehicle to control refueling emissions. The carbon canister system adsorbs the vapors that are displaced from the vehicle fuel tank by the incoming liquid gasoline, and subsequently purges these vapors from the carbon to the engine when the engine is operating.

> ....The requirements of section 182(b)(3) (relating to Stage II gasoline vapor recovery) for areas classified under section 181 as moderate for ozone shall not apply after promulgation of such standards and the Administrator may, by rule, revise or waive the application of the requirements of such section 182(b)(3) for areas classified under section 181 as Serious, Severe, or Extreme for ozone, as appropriate, after such time as the Administrator determines that onboard emissions control systems required under this paragraph are in widespread use throughout the motor vehicle fleet.

This section has the effect of removing Stage II requirements for moderate areas once onboard controls are promulgated, and for the higher classified areas by EPA rule, once onboard is in "widespread use".

The 1990 CAAA exempt, in section 182(b)(3), facilities with gasoline throughputs of 10,000 gallons per month or less and independent small business marketers (independents, as defined in section 325 of the Clean Air Act as amended in August 1977) with throughputs less than 50,000 gallons per month. Section 325 has now been redesignated as section 326 by PL 98-213 and reads as follows:

> Sec. 326. (a) The regulations under this Act applicable to vapor recovery from fueling of motor vehicles at retail outlets of gasoline shall not apply to any outlet owned by an independent small business marketer of gasoline having monthly sales of less than 50,000 gallons. In the case of any outlet owned by an independent small business marketer, such regulations shall provide, with respect to independent small business marketers of gasoline, for a three-year phase-in period for the installation of such vapor recovery equipment at such outlets under which such marketers shall have-
>
> (1) 33 percent of such outlets in compliance at the end of the first year during which such regulations apply to such marketers.
>
> (2) 66 percent at the end of such second year, and
>
> (3) 100 percent at the end of the third year.
>
> (b) Nothing in subsection (a) shall be construed to prohibit any State from adopting or enforcing, with respect to independent small business marketers of gasoline having monthly sales of less than 50,000 gallons, any vapor recovery requirements for mobile source fuels at retail outlets. Any vapor recovery requirement which is adopted by a State and submitted to the Administrator as part of its implementation plan may be approved and enforced by the Administrator as part of the applicable implementation plan for that State.
>
> (c) For purposes of this section, an independent small business marketer of

gasoline is a person engaged in the marketing of gasoline who would be required to pay for procurement and installation of vapor recovery equipment under section 324 of this Act or under regulations of the Administrator, unless such person-

(1)(A) is a refiner, or

(B) controls, is controlled by, or is under common control with, a refiner,

(C) is otherwise directly or indirectly affiliated (as determined under the regulations of the Administrator) with a refiner or with a person who controls, is controlled by, or is under a common control with a refiner (unless the sole affiliation referred to herein is by means of a supply contract or an agreement or contract to use as a trademark, trade name, service mark, or other identifying symbol or name owned by such refiner or any such person), or

(2) receives less than 50 percent of his annual income from refining or marketing of gasoline.

For the purpose of this section, the term "refiner" shall not include any refiner whose total refinery capacity (including the refinery capacity of any person who controls, is controlled by, or is under common control with, such refiner) does not exceed 65,000 barrels per day. For purposes of this section, "control" of a corporation means ownership of more than 50 percent of its stock.

While this defines an independent marketer, it allows a State or local agency to select an exemption level less than 50,000 gallons per month. A single exemption level approach is currently taken by many regulatory agencies in their Stage II programs.

There is another direct reference to Stage II vapor recovery contained in the CAAA of 1977. This is section 324 regarding Cost of Emission Control for Vapor Recovery.

Sec. 324. (a) The regulations under this Act applicable to vapor recovery with respect to mobile source fuels at retail outlets of such fuels shall provide that the cost of procurement and installation of such vapor recovery shall be borne by the owner of such outlet (as determined under such regulations). Except as provided in

> subsection (b), such regulations shall provide that no lease of a retail outlet by the owner thereof which is entered into or renewed after the date of enactment of the Clean Air Act Amendments of 1977 may provide for a payment by the lessee of the cost of procurement and installation of vapor recovery equipment. Such regulations shall also provide that the cost of procurement and installation of vapor recovery equipment may be recovered by the owner of such outlet by means of price increases in the cost of any product sold by such owner, notwithstanding any provision of law.
>
> (b) The regulations of the Administrator referred to in subsection (a) shall permit a lease of a retail outlet to provide for payment by the lessee of the cost of procurement and installation of vapor recovery equipment over a reasonable period (as determined in accordance with such regulations), if the owner of such outlet does not sell, trade in, or otherwise dispense any product at wholesale or retail at such outlet.

In summary, the Clean Air Act and its 1990 Amendments impose several direct requirements regarding Stage II vapor recovery. The provisions in Title 1 will require that Stage II controls be installed at all gasoline dispensing facilities with throughputs above specified levels in moderate, serious, severe, and extreme ozone nonattainment areas, and Title II contains provisions which may relieve the requirement for moderate and above areas if onboard vehicle controls are promulgated. There are also direct references that define independent marketers and describe the party responsible for incurring the costs of vapor recovery.

1.3 ORGANIZATION OF REPORT

The chief objective of this document is to provide information pertaining to Stage II vapor recovery and guidance to State and local agencies in the planning and implementation of Stage II programs. Therefore, the report

is organized in a manner that first provides an introduction to Stage II vapor recovery and then emphasizes implementation issues and potential problems.

Chapter 2 profiles the gasoline marketing industry, with special consideration given to gasoline dispensing facilities. Nationwide populations and size distributions of these facilities are discussed as well as size distributions representative of metropolitan areas. In addition, model facilities are provided.

Chapter 3 discusses the sources of emissions at vehicle refueling facilities, including the calculation of refueling emission factors. This chapter also provides a discussion of factors which influence refueling emissions. Emissions are calculated for the model facilities described in Chapter 2. Finally, emission factors are calculated on a State basis taking into consideration RVP and temperature differences across the nation.

Chapter 4 discusses vehicle refueling control technology, both from a current and an historical basis. In addition, a description of the California Air Resources Board's (CARB) vapor recovery equipment certification program is given which includes details of the certification process and the certified equipment. Finally, the effectiveness of the equipment is discussed, along with program in-use efficiency.

Chapter 5 addresses the costs associated with Stage II control. Equipment, installation, and maintenance costs are discussed. Also, studies conducted in the St. Louis area which include actual costs of Stage II installations are presented.

The final chapter is a guidance-oriented chapter which uses the information presented in the earlier chapters. The chapter discusses regulations and approaches to planning, permitting, and enforcement, and is based on areas of the country that have experience with Stage II vapor recovery programs. It also addresses problems experienced by these

agencies and suggested methods for others to use in avoiding similar difficulties.

1.4 REFERENCES

1. McKinney, Laura. California Air Resources Board. Gasoline Vapor Recovery Certification. (Presented at the Air and Waste Management Association 83rd Annual Meeting. Pittsburgh, PA. June 24-29, 1990).

2. Letter from Kunaniec, K., Bay Area Air Quality Management District, to Shedd, S., U.S. Environmental Protection Agency, Chemicals and Petroleum Branch. July 31, 1991. Comments on Preliminary technical guidance document.

2.0 INDUSTRY DESCRIPTION

The purpose of this chapter is to define the industry and facilities affected by a Stage II vapor recovery program. The entire gasoline marketing industry is first discussed, with special emphasis placed on the facilities where gasoline is dispensed into vehicle fuel tanks (service stations). Population and characteristics of the service station industry are then addressed, including a discussion of model dispensing facilities which may be used to summarize the service station size distribution and facilitate the estimation of environmental and economic impacts.

2.1 INDUSTRY DESCRIPTION

The gasoline marketing industry includes many components that move gasoline, from the refinery to the bulk terminal and on to service stations. Gasoline produced by refineries is distributed by a complex system comprised of wholesale and retail outlets. Figure 2-1 depicts the main elements in the marketing network. The flow of gasoline through the marketing system is shown from the point of production (the refinery), through bulk storage facilities (bulk terminals), and finally to retail service stations or private facilities where it is dispensed into vehicle fuel tanks. Gasoline is often carried directly to the dispensing facility from the bulk terminal; however, some gasoline passes through intermediate storage and loading facilities called bulk plants. The wholesale operations of storing and transporting gasoline, including delivery to and storage in

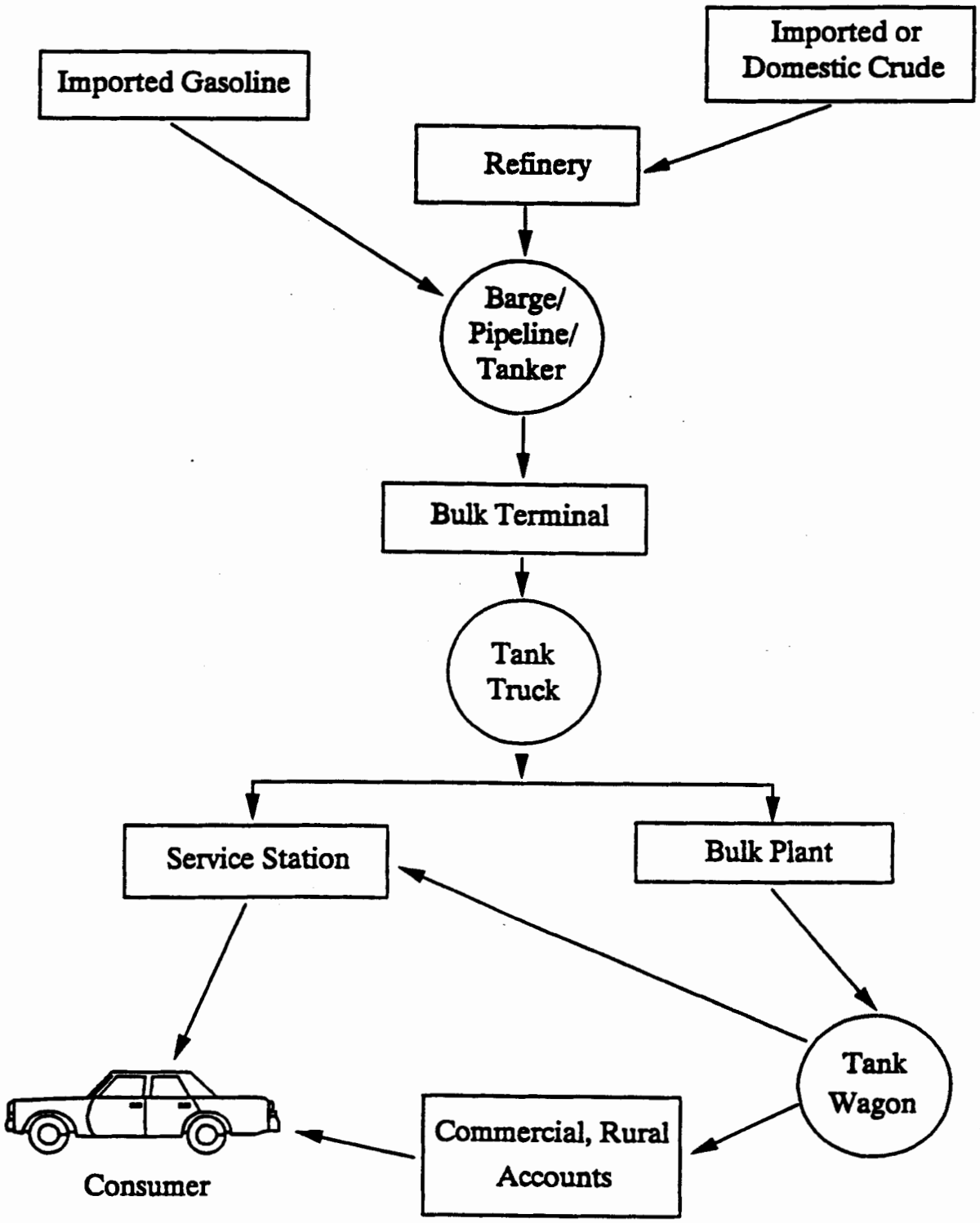

Figure 2-1. Gasoline Marketing In The United States

a service station underground tank, are commonly called Stage I operations. Vehicle refueling operations are commonly termed Stage II.

Bulk gasoline terminals serve as the major distribution point for the gasoline after it leaves the refinery. Gasoline is most commonly delivered to terminals by pipeline, but may also be transferred by ship or barge. Gasoline is stored in large aboveground tanks and later pumped through metered loading areas, called loading racks, into delivery tank trucks. These tank trucks, in turn, deliver product to various wholesale and retail accounts in the marketing network.

Bulk gasoline plants are secondary distribution facilities that typically receive gasoline from bulk terminals transported by tank trucks, store it in aboveground storage tanks, and subsequently dispense it into smaller account trucks for delivery. Only a small portion of the total gasoline is routed through bulk plants and much of this eventually is delivered to private accounts and small service stations.

Gasoline tank trucks are normally divided into compartments with a hatchway at the top of each compartment. Loading can be accomplished by top splash loading or submerged fill through the hatch, or by bottom loading. Either top or bottom loading can be adapted for vapor collection. However, almost all gasoline is transferred using bottom loading because of State vapor recovery regulations and operating and safety advantages. The vapor collection equipment on the truck is basically composed of enclosed valves and piping that enable the vapors from the compartment being filled to be transferred to the storage tank being emptied (vapor balance) or to a vapor control system.

Although the terms "service station", or "dispensing facility", may be used to describe various types of facilities, the term is used in this document to mean any

site where gasoline is dispensed to motor vehicle fuel tanks from stationary storage vessels. This includes both public (retail) and private facilities. Miscellaneous retail outlets that are considered service stations include conventional service stations, convenience stores, and mass merchandisers or "pumpers." Other facilities that may be considered in this classification are marinas, parking garages, and other similar facilities which sell gasoline to the public.

Private facilities include those locations where gasoline is dispensed into government agency (Federal, military, State, and local) vehicles, fleet (auto rental, utility companies, taxis, school buses, etc.) vehicles, and trucking and local service vehicles. Other private facilities include those that refuel farm equipment.

2.2 INDUSTRY POPULATION AND SIZE DISTRIBUTION

The volume of gasoline consumed and the number of service stations in an area are important considerations in assessing refueling emissions as well the potential emission reductions, the economic impact, and even the overall viability of a Stage II vapor recovery program. Also, current and future trends are important in understanding the industry and possible impacts. For example, the present trend toward larger stations means that fewer stations and a greater portion of the throughput would be subject to Stage II controls. Also, the emergence of single nozzle multi-product dispensers could greatly lessen the costs of Stage II equipment and maintenance.

2.2.1 Gasoline Consumption

It is estimated by the Federal Highway Administration that approximately 116 billion gallons of gasoline were consumed in the United States in 1990.[1] One can assume that essentially this entire volume was eventually loaded into vehicle fuel tanks, resulting in refueling VOC emissions. Therefore, nationwide emissions from this source could have

been almost 700,000 Mg of VOC/year, using a typical uncontrolled refueling emission factor of 1,450 mg of VOC/liter of gasoline dispensed (discussed in Chapter 3).

As one would expect, gasoline consumption is directly related to population. Therefore, States and areas with high population density tend to show the highest gasoline consumption figures. Monthly gasoline consumption by State for 1990 is shown in Table 2-1.

It is estimated that over 40 percent of the gasoline in the United States is consumed in ozone nonattainment areas classified as moderate and above. This is due to the large population density and vehicle traffic centered around the metropolitan areas that traditionally have ozone attainment problems. The percentage of the nationwide throughput for each of the nonattainment areas shown in Table 1-1 represents is shown in Table 2-2. The estimated annual gasoline consumption for ozone nonattainment areas by State for 1990 is provided in Table 2-3. Ozone nonattainment area consumption was estimated using county-to-State consumption ratios calculated from EPA's 1985 NEDS gasoline consumption[2] and the nonattainment counties are the final area designations based on 1987-89 design values or 1988-90 design values for a few areas. These data show close to half of the national throughput could be affected by Stage II programs and that the impacts in serious, severe, extreme, and possibly moderate areas could be considerable.

Since the recommended method used to calculate refueling emissions is based on gasoline throughput, accurate consumption estimates are critical. Gasoline consumption data on a county basis are available from EPA's National Air Data Branch. These data are calculated from State gasoline consumption data provided by the Bureau of the Census and apportioned to the county level using total sales data. This approach has come under scrutiny, as the relationship between gasoline consumption and total sales

TABLE 2-1. MONTHLY STATE GASOLINE CONSUMPTION FOR 1990

STATE	1990 GASOLINE CONSUMPTION (1000 GALLONS)												
	JAN	FEB	MAR	APR	MAY	JUN	JUL	AUG	SEP	OCT	NOV	DEC	YEAR
ALABAMA	165,939	154,414	186,531	177,038	189,481	183,308	186,464	191,705	161,861	177,862	173,545	172,296	2,120,444
ALASKA	14,609	13,819	15,285	15,179	51,944	26,920	28,974	26,228	23,926	20,266	18,780	18,203	274,133
ARIZONA	137,580	145,211	138,086	145,949	132,623	148,067	140,193	129,330	129,330	152,291	144,595	135,215	1,678,470
ARKANSAS	51,895	131,098	73,960	86,332	162,742	111,956	121,709	101,096	115,784	100,401	48,154	159,300	1,264,427
CALIFORNIA	1,077,869	1,028,542	1,159,457	1,119,390	1,138,520	1,150,262	1,168,326	1,159,701	1,062,314	1,105,746	1,068,403	1,065,829	13,304,359
COLORADO	115,747	111,469	127,866	126,178	141,839	137,855	138,313	153,265	124,429	133,247	116,404	120,649	1,547,261
CONNECTICUT	114,814	109,961	125,142	111,540	126,939	126,665	123,042	132,512	114,242	120,320	120,031	120,473	1,445,681
DELAWARE	25,733	25,323	28,707	29,136	50,027	11,492	31,992	33,371	27,627	28,956	27,572	27,090	347,026
DISTRICT OF COL.	15,152	13,309	15,607	14,764	14,604	14,436	14,833	15,137	14,007	14,650	14,650	14,650	175,799
FLORIDA	535,235	518,116	505,269	574,248	525,085	520,778	500,919	509,899	522,195	465,047	517,679	517,679	6,212,149
GEORGIA	273,834	280,655	312,408	275,671	330,619	307,471	306,617	317,506	278,013	299,760	294,924	294,138	3,571,616
HAWAII	31,198	31,090	32,407	33,282	33,420	33,566	34,887	33,811	32,390	32,637	31,546	28,535	388,769
IDAHO	38,274	35,733	33,357	33,269	41,609	37,407	40,713	45,978	46,429	56,150	42,606	40,138	491,663
ILLINOIS	409,201	409,416	465,787	482,231	411,797	391,679	395,509	434,173	456,624	478,223	454,694	435,394	5,224,728
INDIANA	202,733	191,599	227,402	220,464	233,439	236,753	240,634	246,153	215,356	235,317	221,785	224,694	2,696,329
IOWA	100,960	94,480	106,404	120,707	123,052	108,290	143,584	124,989	95,928	142,902	95,548	119,666	1,376,510
KANSAS	92,720	90,136	108,119	101,969	112,759	116,348	112,077	114,449	96,113	104,344	100,321	101,746	1,251,101
KENTUCKY	116,598	153,417	143,115	168,375	170,541	161,217	156,200	174,641	146,076	157,958	148,210	154,262	1,850,610
LOUISIANA	148,827	144,675	172,589	165,975	179,173	169,984	179,806	192,053	162,263	169,473	161,399	178,238	2,024,455
MAINE	51,560	37,905	54,199	42,473	52,990	54,431	60,256	60,884	50,859	52,286	42,695	50,856	611,394
MARYLAND	166,833	160,287	195,288	183,220	183,323	176,385	190,243	189,391	171,300	183,326	177,876	179,679	2,157,151
MASSACHUSETTS	192,408	180,927	208,209	196,130	212,614	214,062	191,813	241,377	193,879	204,467	199,116	198,951	2,433,953
MICHIGAN	344,302	314,697	356,277	352,822	390,339	387,353	391,303	412,546	337,977	372,412	363,925	347,100	4,371,053
MINNESOTA	144,789	154,652	162,929	164,450	188,586	182,768	196,846	177,129	194,750	180,346	165,939	164,397	2,077,581
MISSISSIPPI	94,797	92,005	115,570	99,310	118,895	107,365	108,238	115,830	94,174	108,075	106,249	104,554	1,265,062
MISSOURI	208,807	198,740	230,116	218,391	252,839	245,629	249,075	250,767	220,082	235,178	228,086	214,773	2,752,483
MONTANA	28,291	28,812	34,481	33,913	38,926	43,122	49,909	36,779	39,779	36,779	36,779	36,779	444,349
NEBRASKA	55,395	55,079	67,979	62,561	70,617	70,501	75,505	74,732	63,437	67,221	64,291	68,197	795,515
NEVADA	51,415	50,358	46,995	54,317	52,845	50,733	61,948	58,064	62,802	53,205	53,384	55,752	651,818
NEW HAMPSHIRE	39,937	38,289	40,861	39,436	42,612	43,819	47,177	50,800	41,555	43,637	40,969	41,045	510,137
NEW JERSEY	302,511	228,736	328,179	284,872	239,093	375,686	309,278	247,482	291,073	348,928	295,584	295,584	3,547,006
NEW MEXICO	64,960	61,351	52,175	79,562	73,298	74,773	73,021	73,841	66,990	66,520	66,798	58,140	811,429

TABLE 2-1. MONTHLY STATE GASOLINE CONSUMPTION FOR 1990 (CONTINUED)

STATE	1990 GASOLINE CONSUMPTION (1000 GALLONS)												
	JAN	FEB	MAR	APR	MAY	JUN	JUL	AUG	SEP	OCT	NOV	DEC	YEAR
NEW YORK	416,589	493,195	598,764	445,437	532,657	510,463	490,484	591,929	509,934	509,934	509,934	509,934	6,119,254
NORTH CAROLINA	262,367	246,437	277,782	288,658	292,941	290,722	296,609	307,581	260,703	279,940	268,306	265,453	3,337,499
NORTH DAKOTA	19,329	27,425	23,665	32,824	29,421	33,532	36,277	38,267	29,783	29,500	28,294	23,883	352,200
OHIO	460,353	412,098	487,063	492,083	516,493	517,808	508,673	539,737	468,174	499,189	383,635	480,482	5,765,788
OKLAHOMA	111,163	153,225	144,039	139,945	148,103	159,462	146,128	159,863	134,289	133,199	143,742	139,334	1,712,492
OREGON	61,604	126,720	90,311	136,149	119,973	103,397	129,325	146,157	125,192	115,784	88,293	123,641	1,366,546
PENNSYLVANIA	357,132	345,955	399,590	384,101	415,749	411,489	409,257	429,245	381,578	404,551	400,717	394,488	4,733,852
RHODE ISLAND	30,519	30,519	30,519	32,143	32,143	32,143	32,602	32,602	32,602	31,755	31,755	31,755	381,057
SOUTH CAROLINA	71,096	160,712	125,946	178,544	137,573	135,151	134,837	134,837	134,837	134,837	134,837	134,837	1,618,044
SOUTH DAKOTA	24,740	25,327	31,673	29,080	34,883	37,487	42,168	42,585	32,606	32,098	31,258	29,991	393,896
TENNESSEE	198,980	184,285	208,243	241,257	232,365	211,570	243,649	217,877	224,550	224,501	202,317	224,043	2,613,637
TEXAS	714,521	677,604	776,979	741,879	781,363	789,124	769,824	781,771	694,567	720,121	704,669	707,070	8,859,492
UTAH	56,789	53,502	59,801	58,438	66,057	65,571	65,328	71,697	60,361	61,132	55,636	60,032	734,344
VERMONT	20,181	27,330	22,955	20,836	24,221	24,976	27,147	28,852	23,325	25,770	22,994	22,054	290,641
VIRGINIA	239,963	213,565	254,201	270,852	235,290	302,746	265,177	273,380	227,481	264,404	257,535	223,248	3,027,842
WASHINGTON	175,316	160,411	202,533	185,078	202,188	200,590	214,681	220,004	193,794	195,956	185,935	174,645	2,311,131
WEST VIRGINIA	67,082	61,275	74,798	73,300	65,427	76,811	80,280	69,914	77,823	63,746	55,234	69,608	835,298
WISCONSIN	156,315	152,195	168,127	166,178	187,701	187,206	200,411	206,212	171,249	172,991	177,632	176,929	2,123,146
WYOMING	23,464	17,716	21,037	19,320	25,641	21,597	24,123	21,843	21,843	21,843	21,843	21,843	262,113
NATIONWIDE	8,882,426	8,853,797	9,868,782	9,749,256	10,167,379	10,132,926	10,186,384	10,439,972	9,458,255	9,869,181	9,347,103	9,557,272	116,512,733

SOURCE: Federal Highway Administration, Monthly Gasoline Reports 1990, as reported in 1991 NPN Factbook

TABLE 2-2. GASOLINE THROUGHPUT PERCENTAGES OF NATIONAL TOTAL FOR OZONE NONATTAINMENT AREAS CLASSIFIED MODERATE OR ABOVE

Nonattainment Areas	Percentage of National Throughput	Nonattainment Areas	Percentage of National Throughput
	Extreme		
Los Angeles-South Coast Air Basin, CA	4.81		
	Severe		
Baltimore, MD	0.99	Philadelphia-Wilm-Trent, PA-NJ-DE-MD	1.91
Chicago-Gary-Lake County, IL-IN	2.52	Southeast Desert Modified AQMA, CA	a
Houston-Galveston-Brazoria, TX	1.64	San Diego, CA	0.86
Milwaukee-Racine, WI	0.52	Ventura Co, CA	0.23
New York-N New Jer-Long Is, NY-NJ-CT	4.97		
			13.64
	Serious		
Atlanta, GA	1.18		
Baton Rouge, LA	0.27	Portsmouth-Dover-Rochester, NH	0.13
Beaumont-Port Arthur, TX	0.18	San Joaquin Valley, CA	0.98
Boston-Lawrence-Worcester (E.MA), MA-NH	2.40	Providence (All RI), RI	0.35
		Sacramento Metro, CA	0.73
El Paso, TX	0.17	Sheboygan, WI	0.00
Greater Connecticut	1.26	Springfield (Western MA), MA	0.31
Muskegon, MI	0.05	Washington, DC-MD-VA	1.12
			9.13
	Moderate		
Atlantic City, NJ	0.12	Miami-Fort Lauderdale-W. Palm Beach, FL	1.52
Charleston, WV	0.12		
Charlotte-Gastonia, NC	0.25	Monterey Bay, CA	0.23
Cincinnati-Hamilton, OH-KY	0.60	Nashville, TN	0.37
Cleveland-Akron-Lorain, OH	1.10	Parkersburg, WV	0.07
Dallas-Fort Worth, TX	1.63	Phoenix, AZ	0.84
Dayton-Springfield, OH	0.35	Pittsburgh-Beaver Valley, PA	0.86
Detroit-Ann Arbor, MI	1.76	Portland, ME	0.17
Grand Rapids, MI	0.25	Raleigh-Durham, NC	0.26
Greensboro-Winston Salem-H Point, NC	0.30	Reading, PA	0.13
Huntington-Ashland, WV-KY	0.09	Richmond-Petersburg, VA	0.07
Kewaunee Co, WI	0.01	Salt Lake City, UT	0.30
Knox & Lincoln Cos, ME	0.03	San Francisco-Bay Area, CA	2.16
Lewiston-Auburn, ME	0.08	Santa Barbara-Santa Maria-Lompoc, CA	0.13
Louisville, KY-IN	0.34	St Louis, MO-IL	1.06
Manitowoc Co, WI	0.03	Toledo, OH	0.20
			15.50

Source: Nonattainment designations from 56 FR 56692 (See Table 1-1)
Gasoline consumption percentages estimated using 1985 NEDs fuel use report

[a] Gasoline consumption not reported because the consumption for this area and the LA South Coast Air Basin consumption cited above overlap, and sufficient information is not in the database to allow proportion this area's consumption from the LA consumption.

TABLE 2-3. ESTIMATED GASOLINE CONSUMPTION BY STATE FOR MODERATE AND ABOVE OZONE NONATTAINMENT AREAS

STATE	TOTAL 1990 THROUGHPUT (1000 gal) (1)	PERCENTAGE OF THROUGHPUT IN MODERATE AND ABOVE OZONE NONATTAINMENT AREAS (2)	MODERATE AND ABOVE OZONE NONATTAINMENT 1990 THROUGHPUT (1000 gal)
ALABAMA	2,120,444	0%	0
ALASKA	274,133	0%	0
ARIZONA	1,678,470	57%	964,833
ARKANSAS	1,264,427	0%	0
CALIFORNIA	13,304,359	94%	12,477,101
COLORADO	1,547,261	0%	0
CONNECTICUT	1,445,681	100%	1,445,681
DELAWARE	347,026	77%	266,202
DISTRICT OF COL.	175,799	100%	175,799
FLORIDA	6,212,149	31%	1,904,708
GEORGIA	3,571,616	40%	1,442,491
HAWAII	388,769	0%	0
IDAHO	491,663	0%	0
ILLINOIS	5,224,728	61%	3,197,686
INDIANA	2,696,329	12%	325,161
IOWA	1,376,510	0%	0
KANSAS	1,251,101	0%	0
KENTUCKY	1,850,610	26%	479,449
LOUISIANA	2,024,455	14%	286,315
MAINE	611,394	58%	353,101
MARYLAND	2,157,151	86%	1,849,060
MASSACHUSETTS	2,433,953	100%	2,433,953
MICHIGAN	4,371,053	55%	2,389,559
MINNESOTA	2,077,581	0%	0
MISSISSIPPI	1,265,062	0%	0
MISSOURI	2,752,483	34%	943,204
MONTANA	444,349	0%	0
NEBRASKA	795,515	0%	0
NEVADA	651,818	0%	0
NEW HAMPSHIRE	510,137	61%	312,603
NEW JERSEY	3,547,006	98%	3,482,556
NEW MEXICO	811,429	0%	0
NEW YORK	6,119,254	49%	3,020,510
NORTH CAROLINA	3,337,499	28%	948,253
NORTH DAKOTA	352,200	0%	0
OHIO	5,765,788	50%	2,860,051
OKLAHOMA	1,712,492	0%	0
OREGON	1,366,546	0%	0
PENNSYLVANIA	4,733,852	49%	2,315,213
RHODE ISLAND	381,057	100%	381,057
SOUTH CAROLINA	1,618,044	0%	0
SOUTH DAKOTA	393,896	0%	0
TENNESSEE	2,613,637	16%	417,739
TEXAS	8,859,492	45%	3,958,250
UTAH	734,344	45%	332,915
VERMONT	290,641	0%	0
VIRGINIA	3,027,842	13%	393,675
WASHINGTON	2,311,131	0%	0
WEST VIRGINIA	835,298	27%	224,213
WISCONSIN	2,123,146	35%	746,396
WYOMING	262,113	0%	0
NATIONWIDE	116,512,733	43%	50,327,735

SOURCES:
(1) Federal Highway Administration, Monthly Gasoline Reports As Reported in 1991 NPN Factbook
(2) Preliminary estimate based on 1987-89 design values or 1988-90 design values for a few areas

has not been well documented. EPA's Global Emissions and Control Division, Air and Energy Engineering Research Laboratory, in Research Triangle Park, NC, is studying this issue in detail and plans to develop correlations with other data such as population density, vehicle registration, number of licensed drivers, highway usage, and many other parameters, which will provide accurate estimates of gasoline consumption on the county level.[3]

EPA's mobile source emission factor model, MOBILE4.1, estimates refueling emission factors that are dependent on either gasoline throughput or vehicle use, i.e. vehicle miles travelled (VMT). As discussed in more detail in Chapter 3, the emission factors are calculated in MOBILE4.1 using the same equation discussed in Section 3.4.1. However, MOBILE4.1 also uses fuel economy information to convert the emission factor from mass per gasoline throughput to mass per VMT.

2.2.2 Service Station Population

While gasoline throughput, or consumption, is the parameter used to calculate emissions, an estimate of the number of facilities is necessary to help characterize the affected community in more detail and to assess economic impacts, both on industry and on regulatory agencies.

2.2.2.1 Retail Stations. A precise determination of the number of retail service stations is very difficult. The U.S. Census Bureau is the source usually relied upon for information of this type. The Census Bureau provides estimates of the number of retail service stations in the Census of Retail Trade, but these data have limited usefulness in defining the entire retail service station industry. These reports are produced every five years and have shown a steady and dramatic decrease in the number of service stations. The reported service station population has gone from 226,459 in 1972 to 114,748 in the most recent 1987 report.[4] However, the definition of service station used by the Census Bureau and the changing face of the

industry make it difficult, if not impossible, to draw conclusions from these estimates.

The Census Bureau defines as retail service stations only those outlets that do 50 percent or more of their dollar business in petroleum products. In 1972, this provided a reasonably representative count of the retail gasoline distribution facilities, as traditional service stations accounted for the majority of retail outlets. Today however, many facilities, such as convenience stores, have large gasoline throughputs yet their sales from gasoline may not total 50 percent of their sales due to the wide variety of products offered.

An added problem with these census data is that they consider only those stations that have payrolls. This automatically excludes the privately owned and operated family, or "Mom and Pop", facilities.

Another source of information traditionally used to estimate retail service station population in the interim period between Census Retail Trade Reports is "Franchising in the Economy", a report formerly generated by the U.S. Department of Commerce. This survey was discontinued in January 1989, but was resumed by the International Franchising Association, a private enterprise. These reports also suffer from shortcomings as the definition of service station is identical to that used by the Census Bureau. The estimates by Franchising in the Economy place the number of service stations in 1990 at 111,700.[5]

Franchising in the Economy does provide figures on convenience store population. The 1988-1990 report accounts for 17,000 stores. However, "National Petroleum News" (NPN) refutes this number by estimating that there are as many as 80,000 convenience stores in business.[6]

After determining the need for a more accurate, current estimate of retail gasoline dispensing facilities, NPN began a vigorous nationwide survey. The results of this effort were contained in the April 1991 issue of NPN.[7] NPN

embarked on this study by collecting the information on a State basis, and allowing each State to be responsible for its own statistics. Official figures for retail gasoline station counts were not available for many States. The study involved searching through motor vehicle department, licensing department, and tax division records in more than half of the States. NPN also contacted weights and measures departments and key local trade associations. NPN estimated that approximately 67 percent of the data obtained were "hard" numbers; i.e., based on registration, licensing, and tax division compilations. The remaining third were obtained from unofficial estimates and, in a few cases, best guess type estimates.

The results of this NPN study are provided in Table 2-4. As shown, the total retail service station population in the nation is estimated to be 210,120. The NPN article also discusses various methodologies which may be useful in the determination of gasoline station population on a State, regional, or local basis.

EPA has conducted several studies of the gasoline marketing industry in connection with the development and implementation of emission regulations. These studies required estimates of the number of service stations. For the most part, EPA has also relied on Census Bureau data as the basis for its estimates. However, the Agency has long recognized the shortcomings of these data and has attempted to locate other sources of accurate information. EPA has utilized service station retail population estimates of approximately 211,000 in 1982,[8] and 190,000 in 1984.[9]

In 1991, EPA is studying the hazardous air pollutant (HAP) emissions from gasoline marketing sources in accordance with Title III of the 1990 Clean Air Act Amendments, including those from tank truck unloading at service stations. During the search for information related to nationwide service station population, EPA received estimates of the current number of retail gasoline outlets

TABLE 2-4. ESTIMATED 1990 RETAIL SERVICE STATION POPULATION

State	Number of Stations	State	Number of Stations
Alabama	6,500	Montana	1,400
Alaska	300	Nebraska	3,000
Arizona	4,010	Nevada	450
Arkansas	3,764	New Hampshire	1,050
California	13,800	New Jersey	3,860
Colorado	3,400	New Mexico	2,066
Connecticut	1,900	New York	6,800
Delaware	450	North Carolina	10,643
Dist. of Columbia	134	North Dakota	1,245
Florida	10,152	Ohio	6,205
Georgia	7,000	Oklahoma	4,700
Hawaii	392	Oregon	2,165
Idaho	1,123	Pennsylvania	6,000
Illinois	10,100	Rhode Island	602
Indiana	4,500	South Carolina	5,200
Iowa	4,169	South Dakota	1,245
Kansas	3,062	Tennessee	6,000
Kentucky	2,446	Texas	11,000
Louisiana	6,600	Utah	2,137
Maine	700	Vermont	856
Maryland	2,450	Virginia	6,000
Massachusetts	2,500	Washington	3,500
Michigan	8,500	West Virginia	2,800
Minnesota	3,598	Wisconsin	5,074
Mississippi	6,000	Wyoming	1,372
Missouri	7,200	NATIONWIDE TOTAL	210,120

Source: National Petroleum News, "Counting Procedure Shows How Retail Outlet Population is Greater Than Expected," April 1991.

from a number of sources. Independent estimates by both the American Petroleum Institute (API)[10] and Lundberg Survey, Inc.[11] placed the number of retail outlets at approximately 175,000.

The NPN estimates discussed earlier were considered. However, EPA concluded that NPN article may slightly overstate the retail population. Support for these conclusions lies in the fact that Lundberg Survey recently conducted a detailed survey of service stations in Arizona that placed the population at 2,000, while the NPN article estimated there are twice that number in the State.[12] Also, there are other questions raised by some of the NPN data, one of which is seen when comparing State service station population and gasoline throughput. For example, the NPN numbers show that North Carolina has over two times as many retail service stations as New York, while the gasoline throughput is approximately 50 percent of New York's.

In lieu of any more precise or better supported number, the 175,000 figure is being used for the 1990 nationwide population of retail service stations in HAP analysis. This is a significant increase in the total number from the estimated 111,000 for 1989 in the Franchising in the Economy data. This increase is primarily due to the inclusion of "other" gasoline dispensing facilities not included in the Census Bureau definition of service station.

While the nationwide estimate could be a point of contention, there are essentially no affects of the nationwide population for Stage II purposes. Since the Stage II requirements contained in the 1990 CAAA are related to ozone nonattainment areas only, the important service station population figures are those for these nonattainment areas. These nationwide estimates are included here to provide States and local agencies with various information related to retail service station population. These agencies have the alternative to use any of this information in estimating the population for their area.

2.2.2.2 Private Stations. All of the estimates discussed above are only for public, or retail facilities. In addition to "public" outlets, there are a significant number of "private" facilities. These outlets are maintained by governmental, commercial, and industrial consumers for their own fleet operations. Government agencies with central garages are typically regional locations for the postal service, Federal government agencies, and State and county agencies. Other miscellaneous facilities include utility companies, taxi fleets, rental car fleets, school buses, and corporate fleets. Estimated national population figures for private facilities are shown in Table 2-5[13] The agricultural sector of private outlets, including farms, nurseries, and landscaping firms, are not included. In general, agricultural outlets have throughputs less than the cutoff levels. These private facilities are an important segment of the industry and should be considered in population estimates. The numbers shown in Table 2-5 were estimated in 1978. However, no more recent nationwide estimates have been identified since this time.

2.2.2.3 Independents. One issue not addressed in any of these estimates is the number of independent service stations. As the Clean Air Act contains a different exemption level for independents, it would be beneficial to describe this segment of the industry. However, as discussed in Chapter 1, the definition of "independent" provided in the Clean Air Act is difficult to apply on a quantitative basis. Also, the complex nature of service station ownership and suppliers increases the difficulty of a tally of independents. Estimates of relative percentages of independent stations are discussed in the following section.

2.2.3 Service Station Size Distribution

Not only is the number of facilities important to a Stage II vapor recovery program, but estimates of the

TABLE 2-5. ESTIMATED PRIVATE SERVICE STATION POPULATION[a]

"Private" Outlets	
Government (Federal, military, state, local)	85,450
Miscellaneous (auto rental, utilities, others)	94,530
Trucking and Local Service	21,900
Taxis	5,380
School Buses	3,070
Total	210,330

[a] Not including about 2.5 million agricultural outlets.

Source: "The Economic Impact of Vapor Recovery Regulations on the Service Station Industry," EPA-450/3-78-029, July 1978.

relative sizes of facilities within the population are needed for the cost analyses discussed later. The parameters most useful to rank service stations are gasoline throughput and the number of nozzles. This apportionment is important for many reasons, but two principal ones are: (1) to estimate the facilities which will be exempted, and (2) to estimate the economic impacts of a regulation.

2.2.3.1 Retail Stations. The size distribution of retail service stations according to gasoline throughput used in the 1987 EPA Stage I study is given in Table 2-6.[14] This size distribution, based on throughput, was used to develop a national profile. The population is skewed toward smaller stations, with over 75 percent having throughputs less than 25,000 gallons per month.

Concerns have been raised regarding the applicability of these estimates to larger metropolitan areas that are typically nonattainment for ozone. In a 1988 report, "An Analysis of Stage II and Onboard Refueling Emissions Control" (Sierra Report),[15] prepared by Sierra Research for the Motor Vehicle Manufacturers Association, the characteristics of the metropolitan service station population are addressed. In this report, it is stated that "EPA has ... failed to recognize that the average size of gasoline stations in metropolitan nonattainment areas is larger than the national average."

The Sierra Report contained a profile from Los Angeles and compared it to the EPA estimates, to demonstrate the difference in retail service station distribution for large metropolitan areas. The use of Los Angeles data to characterize all metropolitan areas in the United States is questionable; however, Sierra did provide information compiled by MPSI Americas, Inc. that suggests the Los Angeles data are only slightly higher than other areas. MPSI, Inc. of Tulsa, Oklahoma annually provides statistics that are reported in the NPN Factbook. Among the statistics are estimates of average facility gasoline consumption on a

TABLE 2-6. NATIONWIDE RETAIL SERVICE STATION DISTRIBUTION ESTIMATED BY EPA

Gasoline Throughput Range (gallons/month)	Percentage of Retail Service Stations
0 - 9,999	26
10,000 - 24,999	30
25,000 - 49,999	26.5
50,000 - 99,999	14
> 100,000	3.5

Source: "Draft RIA: Proposed Refueling Emission Regulations for Baseline Motor Vehicles - Volume I Analysis of Gasoline Marketing Regulatory Strategies," EPA-450/3-87-001a.

category basis. The categories are service stations, pumpers, convenience food stores, and others. Overall totals are also given. The MPSI summaries for 1990 as contained in the 1991 NPN Factbook[16] are shown in Table 2-7. In order to validate the application of the Los Angeles data to other areas of the country, Sierra used 1987 MPSI information as reported in the 1988 NPN Factbook. Sierra compared the average facility throughput for Los Angeles to that reported by MPSI for 1987. The retail service station size distribution from the Sierra Report for Los Angeles is shown in Table 2-8, and the relationship of the Los Angeles data to the 1987 MPSI data is illustrated in Figure 2-2. The 1989 MPSI average service station size is also shown for comparison in Figure 2-2.

EPA has obtained service station throughput data for several metropolitan areas to verify the application of the Los Angeles information presented in the Sierra Report to metropolitan areas across the U.S. The data obtained were compiled by the Lundberg Survey Incorporated[17] and listed gasoline stations and their associated gasoline monthly volumes in gallons. There were approximately 11,000 individual service stations in the database which represented 16 metropolitan statistical areas across the United States. The areas included were:

Syracuse, NY	Houston-Galveston-Brazoria, TX
Phoenix, AZ	St. Louis, MI-IL
San Diego, CA	Portland-Vancouver, OR-WA
Detroit, MI	Milwaukee-Racine, WI
Lansing, MI	New York-Newark-Long Island, NY-NJ-CT
Grand Rapids, MI	Providence-Pawtucket-Fall River, MA-RI
El Paso, TX	Madison, WI
Orlando, FL	Santa Barbara-Santa Maria-Lompoc, CA

The service stations were placed into seven categories according to monthly gasoline throughput. This was done for

TABLE 2-7. 1990 MPSI MARKET SHARE BREAKDOWN

	Service Stations	Pumpers	Convenience Stores	Others	Total
Northeastern Region					
• % of Outlets	60.6	22.3	6.3	10.8	100.0
• % of Volume	54.7	39.2	3.6	2.5	100.0
• Avg. Monthly Volume (Gallons)	62,611	121,861	39,847	15,974	69,360
Midwestern Region					
• % of Outlets	35.9	43.7	9.2	11.2	100.0
• % of Volume	28.2	63.0	6.0	2.8	100.0
• Avg. Monthly Volume (Gallons)	59,220	108,706	42,642	18,802	74,782
Sunbelt Region					
• % of Outlets	22.0	34.5	33.2	10.3	100.0
• % of Volume	23.4	57.8	15.7	3.1	100.0
• Avg. Monthly Volume (Gallons)	55,613	101,853	28,735	18,343	58,798
Western Region					
• % of Outlets	45.6	34.2	12.4	7.8	100.0
• % of Volume	42.6	50.0	5.4	2.0	100.0
• Avg. Monthly Volume (Gallons)	70,428	127,931	38,252	22,593	82,356
Total United States					
• % of Outlets	38.4	33.2	18.3	10.1	100.0
• % of Volume	36.4	52.5	8.5	2.6	100.0
• Avg. Monthly Volume (Gallons)	62,479	112,230	32,220	18,524	69,036

Source: MPSI Inc., Tulsa, Oklahoma, reported in 1991 NPN factbook.

TABLE 2-8. LOS ANGELES RETAIL
SERVICE STATION DISTRIBUTION REPORTED BY SIERRA RESEARCH

Gasoline Throughput Range (gallons/month)	Percentage of Service Stations
0 - 9,999	12.9
10,000 - 24,999	8.0
25,000 - 49,999	21.8
50,000 - 99,999	35.2
> 100,000	22.0

Source: Sierra Research, "An Analysis of Stage II and Onboard Refueling Emissions Control", November 30, 1988.

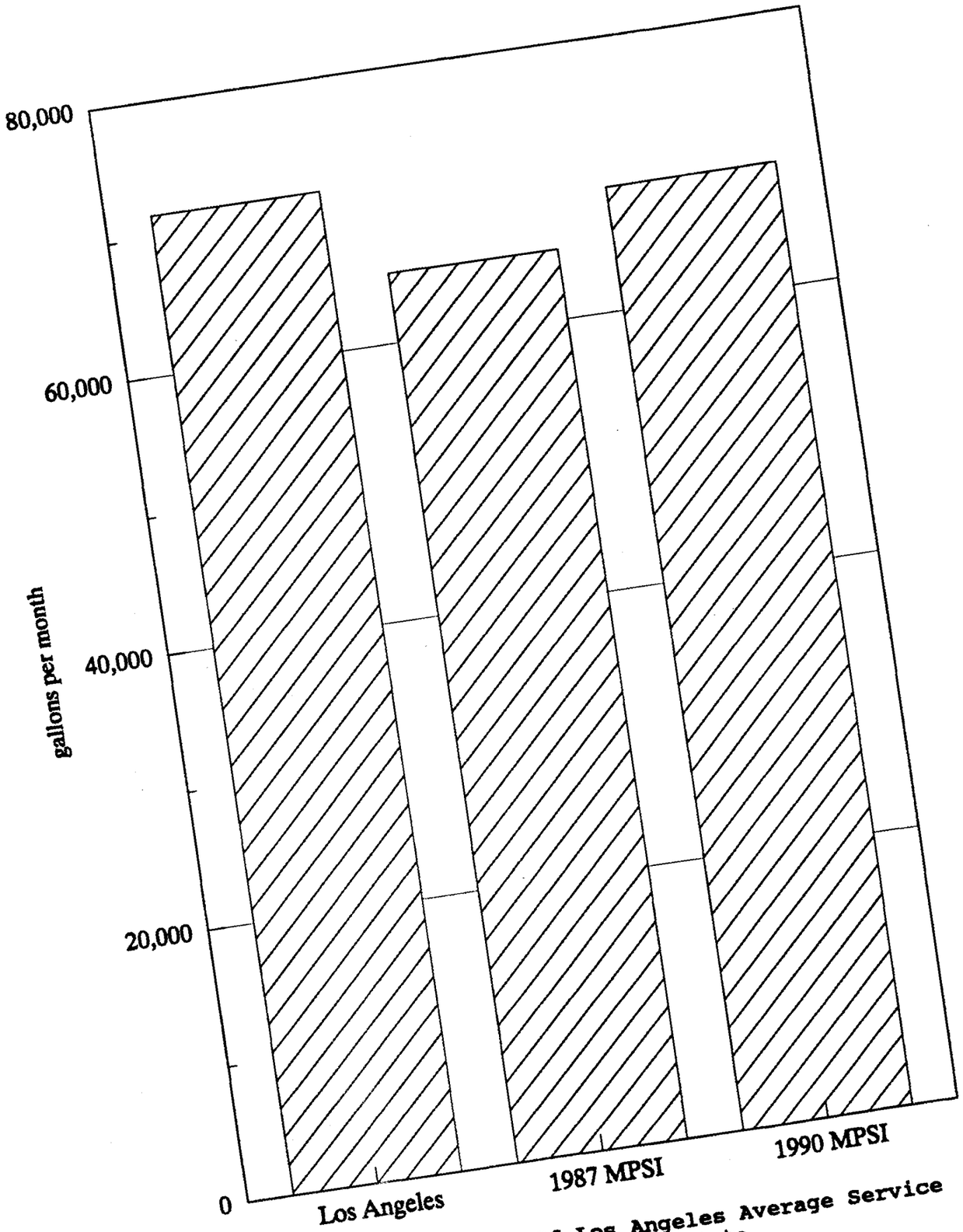

Figure 2-2. Comparison Of Los Angeles Average Service Station Size To MPSI Data

each county as well as an overall distribution for the entire database. The overall distribution from these data is shown in Table 2-9. As seen in the table, the distribution is skewed toward the larger stations, just as Sierra reported. More detailed breakdowns of the Lundberg data are provided in Appendix A.

A side-by-side comparison of the EPA nationwide distribution, the Sierra Los Angeles distribution, and the Lundberg information distribution is provided in Figure 2-3. These data indicate that the nationwide EPA distribution, while accurate for nationwide analyses, may not be appropriate for large metropolitan areas.

A comparison was also made between the consumption distribution of the EPA nationwide facility distribution and the metropolitan area distribution. Table 2-10 summarizes this comparison. As would be expected from the facility distribution, the throughput distribution in metropolitan areas is skewed toward the larger throughput stations.

2.2.3.2 Private Stations. Based on information from Arthur D. Little, Inc.[18] and the U.S. Census Bureau,[19] it was previously estimated that approximately 90 percent of private outlets have throughputs of less than 10,000 gallons per month. In other analyses,[20,21] EPA has used this figure and distributed the remaining 10 percent in proportions representative of the public service station distribution.

2.2.3.3 Independents. Previous EPA analyses have also estimated the relative percentages of retail facilities that would be classified as "independent marketers" under the Clean Air Act definition discussed in Chapter 1. Table 2-11 shows the relative percentages of retail stations that are considered to be independents with the associated throughput ranges.

These percentages were originally estimated during the 1984 Study based on information contained in EPA's report "The Economic Impact of Vapor Recovery Regulations on the Service Station Industry".[22] This report categorized public

TABLE 2-9. RETAIL SERVICE STATION DISTRIBUTION BASED ON LUNDBERG DATA FROM 16 METROPOLITAN AREAS

Gasoline Throughput Range (gallons/month)	Percentage of Service Stations
0 - 5,999	3.8
6,000 - 9,999	4.8
10,000 - 24,999	15.0
25,000 - 49,999	23.5
50,000 - 99,999	32.3
100,000 - 199,999	18.2
> 200,000	2.4

Source: Lundberg Survey, Incorporated.

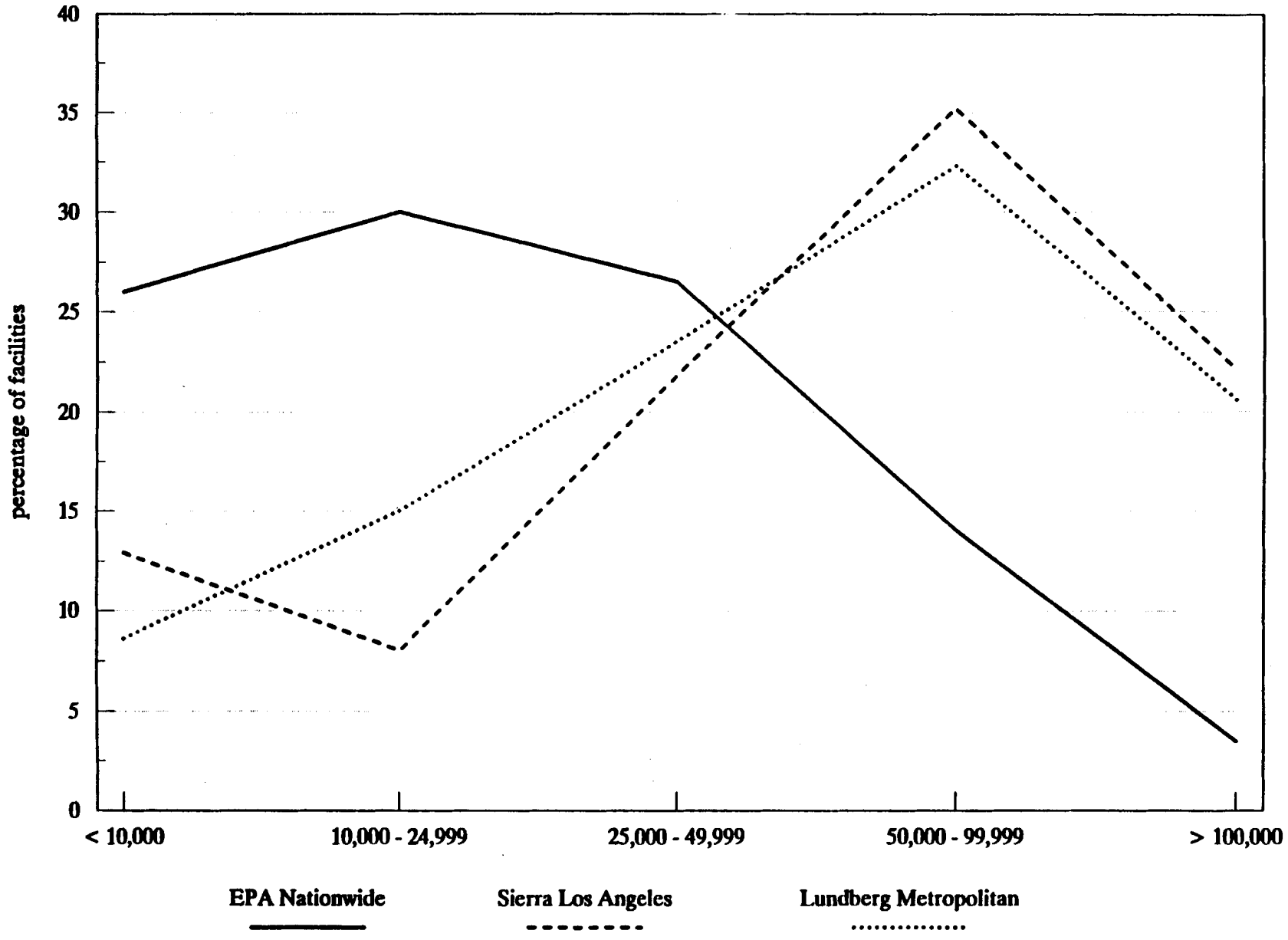

Figure 2-3. Comparison of EPA Nationwide, Sierra Los Angeles, and Lundberg Retail Service Station Size Distributions

TABLE 2-10. CONSUMPTION DISTRIBUTION FOR NATIONWIDE AND METROPOLITAN AREA SCENARIOS

Facility Throughput Range (gallons/month)	Percent Consumption	
	Nationwide Distribution	Metropolitan Distribution
0 - 5,999	4.7	2.4
6,000 - 9,999	4.1	0.4
10,000 - 24,999	17.8	5.0
25,000 - 49,999	27.5	12.4
50,000 - 99,999	27.2	29.1
> 100,000	18.8	50.6

TABLE 2-11. ESTIMATED PERCENTAGE OF RETAIL STATIONS THAT ARE INDEPENDENTS BY THROUGHPUT CLASSIFICATION

Throughput Range (gallons/month)	Percentage of Independents
0 - 9,999	18%
10,000 - 24,999	31%
25,000 - 49,999	45%
50,000 - 99,999	39%
> 100,000	39%

public service stations by company-controlled/company operated, company- controlled/dealer operated, dealer controlled/dealer operated, and convenience stores and provided throughput distributions for each by direct supplier and independent marketer/wholesaler. The distributions in the Economic Impact Study were adjusted to remove all convenience stores from independent marketers (it is not expected that convenience stores obtain greater than 50 percent of sales from gasoline) and add all dealer-controlled/dealer operated stations to independent marketer/wholesaler. Based on the Census Bureau definition of service station (greater than 50 percent of sales from gasoline) and studies that estimate the total number of public outlets that sell gasoline, an approximate ratio of the Census population tot total population was estimated. This ratio was approximately 2/3. The importance of this ratio is that it indicates that approximately 1/3 of the stations do not obtain over 50 percent of their sales form gasoline. Therefore, the percentages obtained for independent marketers were reduced by one-third.

2.2.4 Trends in the Service Station Industry

There are several trends in the service station industry which could have an effect on a Stage II program. Public acceptance of Stage II equipment is an important aspect of any Stage II program. This is especially true in light of the increase in the popularity of self-service type stations. NPN reports substantial increases in the percentage of self-service outlets across the country from under 20 percent in 1975 to over 80 percent in 1989.[23] A similar trend is related to unattended gasoline stations. This concept seems to be growing faster for commercial fleets than for retail facilities. It is anticipated that the number of convenience stores selling gasoline will continue to increase, as well as the volume of gasoline sold by these stores.

As discussed in the previous section, the size of service stations continues to rise. A steady increase in the average facility gasoline throughput has been seen in the last decade. The widespread popularity of dispensers that allow the pumping of two or three gasoline products, or "multiproduct dispensers" have allowed a station to have more nozzles per station. However, the onset of dispensers that have only one nozzle that can dispense multiple gasoline products may cause a substantial decrease in the number of nozzles per station.

Costs are discussed in Chapter 5, but one trend with cost implications should be mentioned in this section. The leaking underground storage tank (UST and LUST) programs, depending upon the age and condition of the tank, require replacement of tanks and/or piping. These programs could affect Stage II programs in two different ways. First, if the underground tanks and piping are replaced concurrently, then the cost attributable to Stage II could be lessened. Second, if these events do not occur simultaneously, then it is possible that service station owners may be required to initiate relatively major reconstruction more than once. This issue is discussed in more detail in Chapter 5.

2.3 MODEL PLANTS

The development of typical, or model plants is a technique often employed to assist in the determination of impacts of a regulation during the planning stages. It is preferable to develop several model plants to represent the range of sizes of facilities present in the industry. The distribution of facilities is applied to the model plants to determine the relative percentage of facilities depicted by each model plant.

In previous analyses,[24,25] EPA has developed model plants for the service station industry. The parameters selected for the model plants are shown in Table 2-12.

TABLE 2-12. SERVICE STATION MODEL PLANTS AND NATIONWIDE POPULATIONS

Model Plant No.	1a	1b	2	3	4	5
Average Throughput 10^3 l/mo (10^3 gal/mo)	7.6 (2)	23.0 (6)	76.0 (20)	132.0 (35)	246.0 (65)	700.0 (185)
Throughput Range 10^3 l/mo (10^3 gal/mo)	0-19 (0-5)	19-38 (5-10)	38-95 (10-25)	95-189 (25-50)	189-379 (50-100)	>379 (>100)
Number of Nozzles						
Single Dispensers	2	2	3	6	9	15
Multidispensers	6	6	6	12	18	30

Sources: 1987 Draft RIA.

2.4 SUMMARY

It is important to develop an accurate characterization of the industry that would be affected by a Stage II vapor recovery regulation. This chapter has provided information related to gasoline consumption, service station population, size distribution, and model plants that may be useful to agencies involved in these planning activities.

2.5 REFERENCES

1. Federal Highway Administration, Monthly Gasoline Reports 1990, as reported in 1991 National Petroleum News (NPN) Factbook Annual Issue. June 1990.

2. 1985 NEDS Fuel Use Report. U.S. Environmental Protection Agency National Air Data Branch. Research Triangle Park, NC.

3. Memorandum from Norwood, P., Pacific Environmental Services, Inc., to Shedd, S., U.S. Environmental Protection Agency. April 11, 1991. Reporting on a meeting with Larry Jones, EPA, AEERL, regarding gasoline consumption project.

4. 1987 Census of Retail Trade. U.S. Department of Commerce.

5. Franchising in the Economy 1988-1990. International Franchising Association, Washington, D.C.

6. "Updated Survey Shows Fairly Static Growth In Service Station Population", National Petroleum News (NPN). April 1990.

7. "Counting Procedure Shows How Retail Outlet Population Is Greater Than Expected", National Petroleum News (NPN). April 1991.

8. Evaluation of Air Pollution Regulatory Strategies for Gasoline Marketing Industry. U.S. Environmental Protection Agency, Office of Air Quality Planning and Standards and Office of Mobile Sources. Publication No. EPA-450/4-84-012a. July 1984.

9. Draft Regulatory Impact Analysis: Proposed Refueling Emission Regulations for Gasoline-Fueled Motor Vehicles -- Volume I - Analysis of Gasoline Marketing Regulatory Strategies. U.S. Environmental Protection Agency. Office of Air Quality Planning and Standards and Office of Mobile Sources. Publication No. EPA-450/3-87-001a. July 1987.

10. Telecon. Thompson, S., Pacific Environmental Services, Inc., with Peterson, B., American Petroleum Institute. March 27, 1991. Number of Service Stations.

11. Telecon. Bollman, A., Research Triangle Institute, with Keene, B., Lundberg Survey, Inc. April 19, 1991. Number of Public Service Stations.

12. Reference 11.

13. The Economic Impact of Vapor Recovery Regulations on the Service Station Industry. U.S. Occupational Safety and Health Administration, Washington, D.C., and U.S. EPA, Research Triangle Park, N.C. Publication No. EPA-450/3-78-029. July 1978.

14. Reference 9.

15. Sierra Research, An Analysis of Stage II and Onboard Refueling Emissions Control, prepared for Motor Vehicle Manufacturers Association, Inc. November 30, 1988.

16. "U.S. Regional and National Market Shares.", MPSI Inc., Tulsa Oklahoma, as reported in 1990 National Petroleum News (NPN) Factbook Annual Issue. June 1990.

17. Lundberg Survey, Inc. Census Data Gasoline Throughput for U.S. EPA, June 28, 1989.

18. Reference 13.

19. 1977 Census of Retail Trade. U.S. Department of Commerce.

20. Reference 8.

21. Reference 9.

22. Reference 13.

23. 1990 National Petroleum News (NPN) Factbook Annual Issue. June 1990.

24. Reference 8.

25. Reference 9.

3.0 SOURCES OF EMISSIONS

In this chapter, the emission sources at service stations are described along with factors that affect the rate at which emissions occur. In addition, emission estimates or emission factors are presented that represent emissions in different areas of the country. Emission rates for different model facilities are presented to show how total emissions vary by facility size and to characterize rates for facilities throughout the country.

3.1 GENERAL

In virtually all cases in the gasoline marketing chain, emissions of gasoline vapors are caused by the transfer of liquid gasoline from one container (or tank) to another. The liquid entering the fixed volume container displaces an equal volume of gasoline vapor/air mixture to the atmosphere. If the volume of vapor displaced from the container equals the volume of liquid loaded into the container, the ratio of vapor to liquid volume (V/L ratio) is equal to 1.

However, the volume of vapors displaced often does not equal the volume of liquid transferred. Temperature variations between the liquid loaded and the vapors in the tank can cause an expansion or contraction of the vapors causing the V/L ratio to vary from 1. When warm liquid enters a cool tank, the temperature in the tank increases thereby increasing the volume of vapors in the tank and increasing the volume of vapors displaced. This causes the volume of displaced vapors to be greater than the volume of

liquid loaded, resulting in a V/L ratio greater than 1. This is called vapor growth.

The opposite occurs when the liquid entering the fixed volume tank is cooler than the tank temperature. The cooler temperature reduces the vapor volume displaced and the V/L ratio is less than 1. This is called vapor shrinkage.

Vapor growth or vapor shrinkage can be a common occurrence when transferring liquids from service station underground tanks containing liquid of relatively stable temperature, insulated by the surrounding earth, into a vehicle fuel tank at extreme temperatures caused by over-road exposure to ambient conditions (fuel tanks very warm in summer, very cold in winter). Because vapor growth and vapor shrinkage occur so often, errors in emission estimates can easily be encountered by simply assuming the volume of vapors displaced equals the volume of liquid entering the tank. Testing of these emission sources requires accurate measurements of displaced volumes to calculate the mass of emissions released.

Because the amount of emissions that occur is tied so closely to the amount of liquid transferred into the tank or container, emission factors are often expressed in terms of mass emitted per volume of liquid loaded (i.e., pounds of VOC per 1,000 gallons of liquid loaded or milligrams of VOC per liter of liquid loaded).

Increased emphasis is being placed on the evaluation of the emissions of hazardous air pollutants (HAPs). The CAAA of 1990 specify 189 compounds that have been classified as HAPs. Several of these HAPs are typically found in gasoline vapors. Gasoline vapors are made up of a complex mixture of compounds originating from the evaporation of liquid gasoline.[1] Table 3-1 shows an example mixture of compounds found in displaced gasoline vapors. Several of these compounds correspond with compounds found on the list of 189

TABLE 3-1. EXAMPLE COMPOSITION OF GASOLINE VAPORS

Compound	Weight Percent
N-Propane	4.6
Isobutane	19.0
N-Butane	21.4
Isopentane	28.3
N-Pentane	5.3
2-2-Dimethyl Butane	0.6
2-3-Dimethyl Butane	1.0
2-Methyl Pentane	4.0
3-Methyl Pentane	2.3
N-Hexane	1.1
3-3-Dimethyl Pentane	1.1
3-Methyl Hexane	0.7
Methyl Cyclopentane	1.2
Cis-2-Pentene	0.6
Benzene	0.7
Toluene	1.0
Other[a]	7.1
	100

[a] Other hydrocarbons with individual weight percent less than 0.5.

Source: Furey, Robert and Nagel, Bernard. Composition of Vapor Emitted From a Vehicle Gasoline Tank During Refueling. SAE Technical Paper Series #860086, February 1986.

HAPs listed in Title III of the CAAA. Table 3-2 summarizes the HAP compounds found in normal gasoline vapors and indicates the percent of total emissions, on a weight basis, that each HAP represents.[2] These HAP emission rates were calculated using liquid gasoline composition, Raoult's Law, and gasoline vapor analyses. These values may not compare exactly between Tables 3-1 and 3-2, since Table 3-1 is based on one experimental sample group and the normal fuel profile in Table 3-2 is based on a wide variety of samples.

The reformulated and oxygenated fuel requirements contained in Title II of the CAAA will affect the HAP content of gasoline. Also contained in Table 3.2 is an estimate of a vapor profile for a reformulated gasoline. Taken into account in this profile are the required reductions in benzene and total aromatic content, the addition of methyl tert butyl ether (MTBE) as an oxygenate, and the reduction of all other components due to the addition of a large volume of MTBE. HAP emissions from all Stage I gasoline marketing sources (pipelines, terminals, bulk plants, storage tanks, tank trucks, service station underground tank loading) are being evaluated for regulation under the National Emission Standards for Hazardous Air Pollutant (NESHAP) program.

An interesting point is with regard to MTBE. MTBE is a gasoline additive traditionally used in small amounts as an octane booster. However, with oxygenated fuel requirements contained in Title II of the 1990 Clean Air Amendments, the addition of MTBE in gasoline will be widespread. Approximately 15 weight percent MTBE in liquid gasoline is needed to meet the 2.7 weight percent oxygen requirement for carbon monoxide nonattainment areas, and 11 weight percent to meet the 2.0 weight percent oxygen requirements for the largest ozone nonattainment areas. This means that for gasolines containing MTBE, 15 percent or more of gasoline vapor could be made up of components listed by EPA as hazardous pollutants.

TABLE 3-2. GASOLINE HAZARDOUS AIR POLLUTANT VAPOR PROFILE

Hazardous Air Pollutant	HAP Content HAP/VOC wt percentage ratio	
	Arithmetic Average Normal Fuel	Estimated Reformulated Fuel
Hexane	1.6	1.4
Benzene	0.9	0.4
Toluene	1.3	1.1
2,2,4 Trimethylpentane (iso-octane)	0.8	0.7
Xylenes	0.5	0.4
Ethylbenzene	0.1	0.1
Naphthalene	0.5	0.0
Cumene	0.1	0.0
MTBE		8.7
TOTAL HAPS[a]	4.8	13

[a] Columns do not add to totals. Total HAPs as well as individual HAPs were calculated for each data point in the normal fuel analysis, and thus the totals are not simply sums of the individual components. Adjustments were made to this normal fuel based on the reformulated gasoline requirements to predict a reformulated profile.

Source: Preliminary Estimates from EPA Stage I NESHAP project on gasoline marketing.

3.2 EMISSION SOURCES

Emission sources described in this section are divided into service station Stage I emissions (gasoline transfers into the station underground storage tanks) and service station Stage II emissions (automobile refueling emissions).

3.2.1 Service Station Stage I Emissions

Gasoline vapor or volatile organic compound (VOC) emissions occur when gasoline being delivered to the service station displaces vapors to the atmosphere (as described earlier). Under a typical gasoline delivery, a hose is connected from the delivery truck to a ground level fitting that is attached to the underground gasoline storage tank (see Figure 3-1). The gasoline is allowed to drop from the delivery truck into the underground tank. This activity is often called "the service station drop" or "dropping a load of product". Displaced vapors are emitted to the atmosphere through the underground tank vent. Submerged loading, consisting of a tube installed to within 6 inches of the bottom of the tank, significantly reduces emissions because turbulence caused by the splashing of the delivery product in the underground tank is minimized.

When Stage I emission controls are used, displaced vapors are collected and routed back into the delivery truck using a combination of pipes and hoses (see Figure 3-2). Stage I emissions from service stations and the resulting technology are not the subject of this report but have been included in the discussion for completeness. These emissions have been the subject of several EPA programs and further information can be obtained in other EPA publications.[3,4,5,6,7] While tank truck unloading (Stage I) and vehicle refueling (Stage II) are separate events, defective Stage I equipment (leaking seals, missing caps, etc.) can adversely affect the efficiency of a Stage II system.

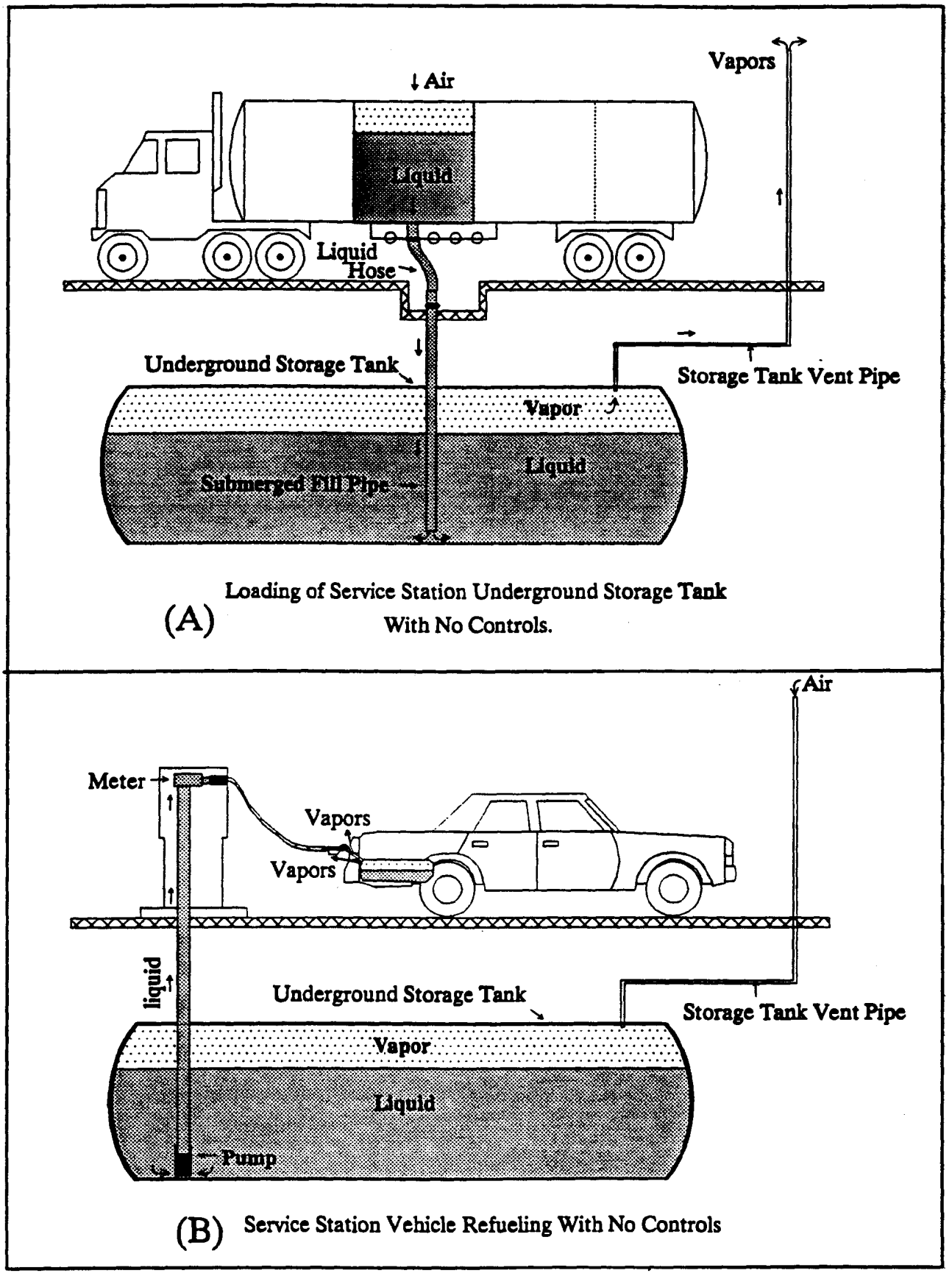

Figure 3-1. Uncontrolled Service Station Operations

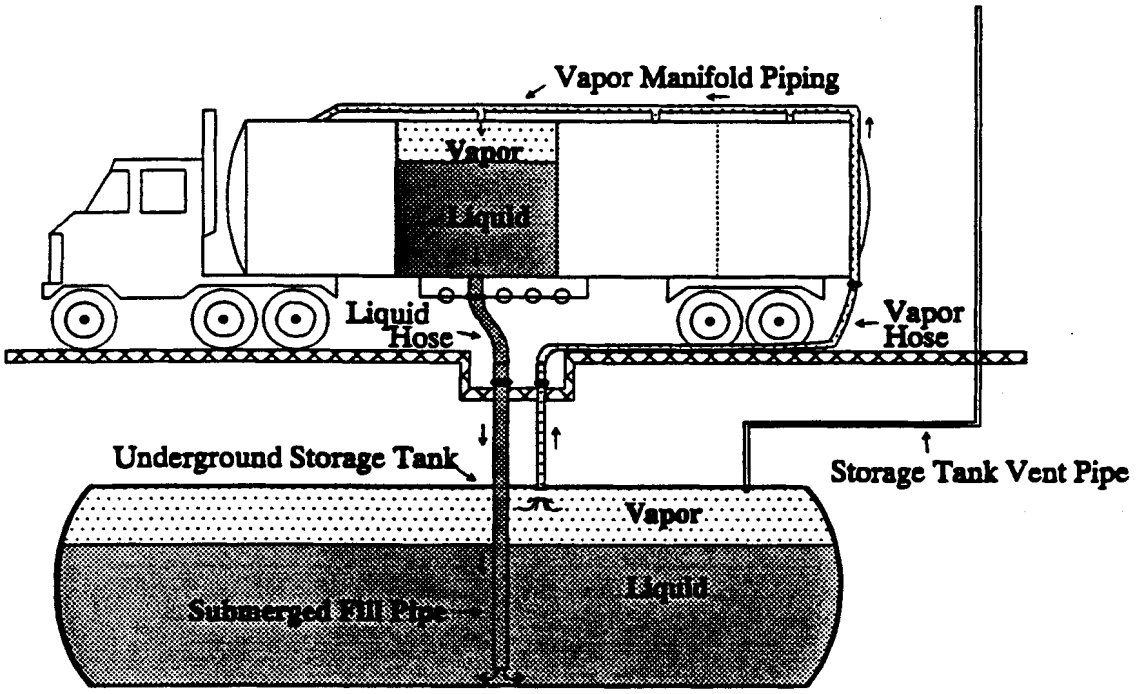

Loading of Service Station Underground Storage Tank
(A) With Vapor Balance System (Stage I Controls).

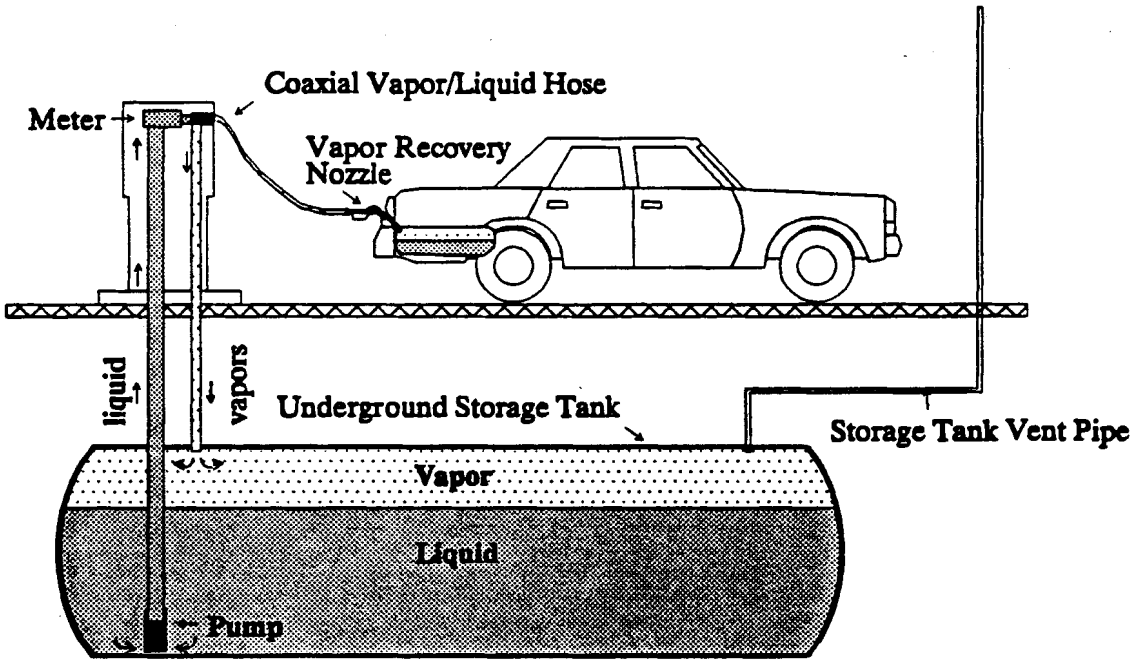

Service Station Vehicle Refueling With Vapor Balance
(B) System (Stage II Controls).

Figure 3-2. Controlled Service Station Operations (Stage I and Stage II)

3.2.2. Vehicle Refueling Emissions

3.2.2.1 Vehicle Refueling. Gasoline vapor/VOC emissions occur when liquid from the underground tank is dispensed into the vehicle fuel tank. Vapors contained in the fuel tank are displaced back through the vehicle fillneck and are emitted to the atmosphere (see Figure 3-1). With the installation of Stage II vapor recovery equipment, displaced vapors are captured at the vehicle fillneck and routed back to the underground tank. Figure 3-2 illustrates the basic Stage II vapor recovery concept. Detailed descriptions of the Stage II vapor recovery equipment and discussions of emission reductions can be found in Chapter 4. Factors influencing emissions and estimates of emissions are presented later in this chapter.

3.2.2.2. Spillage. VOC emissions from the vehicle refueling operation can also occur when loading the vehicle at a rate faster than the displaced vapors can be released. When this occurs liquid is forced up the fillneck and can cause "spitback" of liquid back out of the vehicle fillneck. Overfilling of the vehicle can also cause liquid spillage. Overfills can occur due to a failure in the nozzle shutoff mechanism or can occur due to operator error (repeated "topping off" of the vehicle tank). Small amounts of liquid drips can also be spilled due to wetted nozzle tips upon removal from the vehicle and vapor condensation on cool nozzle surfaces.

3.2.2.3. Breathing/Emptying Losses. Emptying losses occur when gasoline is pumped out of the service station underground tank to refuel a customer's automobile fuel tank. Air is drawn into the underground tank, through the underground tank vent pipe, to replace the volume of liquid removed. Prior to any gasoline being removed from the tank, the liquid and vapors in the underground tank are at equilibrium and the vapor space above the liquid is essentially saturated. When liquid is pumped from the tank and air is drawn in through the vent, the vapor space above

the liquid is no longer in equilibrium with the liquid. A small amount of liquid evaporation takes place in an attempt to again saturate the vapor space above the liquid. This evaporation causes an increase in volume in the vapor space and this excess volume is pushed out the underground tank vent pipe. The portion of vapors pushed out the vent is called the emptying loss.

Stage II vapor recovery equipment helps to controls this emptying loss by returning essentially saturated vapors from the vehicle fuel tank back to the service station underground tank to replace the liquid removed. Because the return vapors are saturated and equal in volume to the liquid removed, equilibrium in the tank is maintained, product evaporation does not take place, and emptying loss emissions do not occur.

Breathing loses in fixed volume storage tanks are caused by vapor and liquid expansion and contraction due to diurnal temperature changes. As temperatures increase, vapor volume increases pushing vapor out of the vent pipe (out-breathing). When temperatures decrease, vapor volume decreases and air is drawn into the tank (in-breathing). Breathing loss emissions are minimal at service stations since storage tanks are located underground, insulated by the earth, and have a very stable temperature profile. However, breathing losses from service station storage tanks are becoming more prevalent due to the popularity of above ground storage tanks and the installation of vaulted underground storage tanks. Above ground storage tanks are more susceptible to temperature and pressure changes and thus are more likely to experience both vapor growth and vapor shrinkage. It is also reported that the double wall, or "vaulted" underground storage tanks that are being installed to comply with underground storage tank (UST) regulations are more susceptible to thermal effect and therefore breathing losses.[8,9]

3.3 FACTORS INFLUENCING EMISSIONS

Many studies have been done to evaluate the factors that affect refueling emissions. A recent study by EPA's Office of Mobile Sources (OMS) empirically derived an equation that predicts the emissions from an automobile refueling event.[10] This testing consisted of controlled vehicle refueling inside a shed with sensors to gather fuel tank temperature, liquid dispensed temperature, and displaced vapor. Emissions testing was conducted on a variety of light-duty vehicles, with varying fillneck configurations, and on light-duty trucks. The following sections describe the different factors that influence this emission factor equation.

3.3.1 Reid Vapor Pressure (RVP)

Certainly one of the most important factors affecting the emissions from automobile refueling is the volatility of the gasoline. A less volatile gasoline will create less emissions when transferred than a more volatile gasoline. Reid vapor pressure (RVP) is a common measure of fuel volatility and represents the vapor pressure of the fuel at 100°F. RVP is a standard industry measure of fuel volatility. Although RVP is a measure of fuel volatility at 100°F, the empirical emissions equation described below (3.4.1) adjusts this volatility to reflect actual temperature conditions.

The RVP of gasoline is adjusted through blending at the refinery to account for temperature and pressure differentiations across the country. In the summer when warm temperatures enhance volatilization, gasolines can be blended with a lower RVP and still provide ample vaporization for combustion in the vehicle engine. Reducing RVP in the summer, therefore, reduces emissions from gasoline transfers without reducing vehicle performance. Too high an RVP in the summer can create excess volatilization in the engine causing vapor lock. During the winter months when cold temperatures inhibit volatilization, gasolines can be

blended with a higher RVP to ensure sufficient volatilization for engine start-up and operations. This increase in RVP when temperatures decrease and decrease in RVP when temperatures increase is an attempt to provide a uniform fuel volatility for smooth engine performance all year.

Information on winter/summer actual RVP samples are taken throughout the year in selected areas. This information is compiled and published by the National Institute for Petroleum and Energy Research (NIPER) organization. This data is based on fuel surveys and fuel analyses conducted throughout the country.[11]

Fuel RVPs can be blended to adjust for certain altitude and temperature variations in specific geographical areas. On June 11, 1990, EPA promulgated limits for RVP in the summer for all States.[12] These limits will reduce fuel RVP to 9.0 or below in most States in the summer months. However, the RVP requirements proposed in the May 29, 1991, Federal Register[13] indicate that RVPs less than 9.0 will only be required during the summer months in ozone nonattainment areas. The remaining areas in States with lower RVP limits need only meet 9.0. Table 3-3 summarizes the RVP restrictions by month for each State for the entire year.[14,15] The weighted averages presented are weighted by the monthly fuel consumption presented in Table 2-1. In addition, the summer weighted average RVP is calculated using the values in the table (i.e. values less than 9.0 RVP) and is therefore representative of nonattainment areas for those States. Attainment area RVP would be higher since summer RVP is not regulated below 9.0. For those States where an RVP restriction less than 9.0 appears in the summer months, this more stringent restriction applies only to

TABLE 3-3. 1992 AND BEYOND RVP LIMITS BY MONTH AND BY GEOGRAPHIC LOCATION

	Reid Vapor Pressure (psi)												Weighted Average		
	JAN	FEB	MAR	APR	MAY	JUN	JUL	AUG	SEP	OCT	NOV	DEC	Summer (Apr-Sep)	Winter (Oct-Mar)	Annual
ALABAMA	13.5	13.5	12.5	11.5	9.0	7.8	7.8	7.8	7.8	11.5	12.5	13.5	8.6	12.8	10.6
ALASKA	15.0	15.0	15.0	15.0	14.2	13.5	13.5	13.5	14.2	15.0	15.0	15.0	13.9	15.0	14.3
ARIZONA	13.5	12.5	10.8	10.0	9.0	7.8	7.8	7.8	7.8	9.5	10.8	12.5	8.4	11.6	10.0
ARKANSAS	14.2	13.5	12.5	11.5	9.0	7.8	7.8	7.8	7.8	12.5	13.5	14.2	8.5	13.5	10.7
CALIFORNIA	13.6	13.4	12.6	11.6	9.0	7.8	7.8	7.8	7.8	10.5	12.1	13.6	8.6	12.6	10.6
COLORADO	15.0	14.2	12.5	11.5	9.0	7.8	7.8	7.8	7.8	10.8	12.5	14.2	8.6	13.1	10.7
CONNECTICUT	15.0	15.0	14.2	13.5	9.0	9.0	9.0	9.0	9.0	13.5	14.2	15.0	9.7	14.5	12.0
DELAWARE	15.0	15.0	14.2	13.5	9.0	9.0	9.0	9.0	9.0	12.5	14.2	15.0	9.7	14.3	11.9
DIST. OF COL.	15.0	14.2	13.5	12.5	9.0	7.8	7.8	7.8	7.8	12.5	14.2	15.0	8.8	14.1	11.4
FLORIDA	13.5	13.5	12.5	11.5	9.0	7.8	7.8	7.8	7.8	11.5	12.5	13.5	8.7	12.9	10.7
GEORGIA	13.5	13.5	12.5	11.5	9.0	7.8	7.8	7.8	7.8	11.5	12.5	13.5	8.6	12.8	10.7
HAWAII	11.5	11.5	11.5	11.5	11.5	11.5	11.5	11.5	11.5	11.5	11.5	11.5	11.5	11.5	11.5
IDAHO	15.0	14.2	13.5	12.5	9.0	9.0	9.0	9.0	9.0	10.8	12.5	14.2	9.5	13.2	11.3
ILLINOIS	15.0	15.0	14.2	13.0	9.0	9.0	9.0	9.0	9.0	12.5	13.9	14.6	9.7	14.2	12.0
INDIANA	15.0	15.0	14.2	13.5	9.0	9.0	9.0	9.0	9.0	12.5	14.2	15.0	9.7	14.3	11.9
IOWA	15.0	15.0	14.2	12.5	9.0	9.0	9.0	9.0	9.0	12.5	14.2	15.0	9.6	14.2	11.8
KANSAS	15.0	14.2	12.5	11.5	9.0	7.8	7.8	7.8	7.8	10.8	12.5	14.2	8.6	13.1	10.8
KENTUCKY	15.0	14.2	13.5	12.5	9.0	9.0	9.0	9.0	9.0	12.5	14.2	15.0	9.6	14.0	11.7
LOUISIANA	13.5	13.5	12.5	11.5	9.0	7.8	7.8	7.8	7.8	11.5	12.5	13.5	8.6	12.8	10.6
MAINE	15.0	15.0	14.2	13.5	9.0	9.0	9.0	9.0	9.0	13.5	14.2	15.0	9.6	14.5	11.9
MARYLAND	15.0	15.0	14.2	13.5	9.0	7.8	7.8	7.8	7.8	12.5	14.2	15.0	9.0	14.3	11.6
MASSACHUSETTS	15.0	15.0	14.2	13.5	9.0	9.0	9.0	9.0	9.0	13.5	14.2	15.0	9.7	14.5	12.0
MICHIGAN	15.0	15.0	14.2	13.5	9.0	9.0	9.0	9.0	9.0	13.5	14.2	15.0	9.7	14.5	12.0
MINNESOTA	15.0	15.0	14.2	13.5	9.0	9.0	9.0	9.0	9.0	12.5	14.2	15.0	9.7	14.3	11.8
MISSISSIPPI	13.5	13.5	12.5	11.5	9.0	7.8	7.8	7.8	7.8	11.5	12.5	13.5	8.6	12.8	10.7
MISSOURI	15.0	14.2	13.5	12.5	9.0	7.8	7.8	7.8	7.8	12.5	13.5	14.2	8.7	13.8	11.1
MONTANA	15.0	15.0	14.2	12.5	9.0	9.0	9.0	9.0	9.0	12.5	14.2	15.0	9.5	14.3	11.7
NEBRASKA	15.0	15.0	14.2	12.5	9.0	9.0	9.0	9.0	9.0	10.8	12.5	14.2	9.5	13.5	11.4
NEVADA	14.2	13.4	12.2	11.2	9.0	7.8	7.8	7.8	7.8	10.2	11.6	13.4	8.5	12.5	10.4
NEW HAMPSHIRE	15.0	15.0	14.2	13.5	9.0	9.0	9.0	9.0	9.0	13.5	14.2	15.0	9.7	14.5	12.0
NEW JERSEY	15.0	15.0	14.2	13.5	9.0	9.0	9.0	9.0	9.0	13.5	14.2	15.0	9.7	14.4	12.1
NEW MEXICO	13.9	12.2	11.6	10.4	9.0	7.8	7.8	7.8	7.8	10.8	12.5	13.5	8.5	12.4	10.3
NEW YORK	15.0	15.0	14.2	13.5	9.0	9.0	9.0	9.0	9.0	13.5	14.2	15.0	9.7	14.5	12.0

TABLE 3-3. 1992 AND BEYOND RVP LIMITS BY MONTH AND BY GEOGRAPHIC LOCATION (CONTINUED)

	Reid Vapor Pressure (psi)												Weighted Average		
	JAN	FEB	MAR	APR	MAY	JUN	JUL	AUG	SEP	OCT	NOV	DEC	Summer (Apr-Sep)	Winter (Oct-Mar)	Annual
NORTH CAROLINA	14.2	13.5	13.5	12.5	9.0	7.8	7.8	7.8	7.8	12.5	13.5	14.2	8.8	13.6	11.1
NORTH DAKOTA	15.0	15.0	14.2	13.5	9.0	9.0	9.0	9.0	9.0	12.5	14.2	15.0	9.7	14.2	11.7
OHIO	15.0	15.0	14.2	13.5	9.0	9.0	9.0	9.0	9.0	12.5	14.2	15.0	9.7	14.3	11.9
OKLAHOMA	14.2	13.5	12.5	11.5	9.0	7.8	7.8	7.8	7.8	10.8	12.5	14.2	8.6	12.9	10.7
OREGON	15.0	14.2	13.5	13.5	9.0	7.8	7.8	7.8	7.8	12.5	13.9	14.6	9.0	13.9	11.2
PENNSYLVANIA	15.0	15.0	14.2	13.5	9.0	9.0	9.0	9.0	9.0	13.5	14.2	15.0	9.7	14.5	12.0
RHODE ISLAND	15.0	15.0	14.2	13.5	9.0	9.0	9.0	9.0	9.0	13.5	14.2	15.0	9.7	14.5	12.1
SOUTH CAROLINA	13.5	13.5	13.5	12.5	9.0	7.8	7.8	7.8	7.8	12.5	13.5	13.5	9.0	13.3	11.0
SOUTH DAKOTA	15.0	15.0	14.2	12.5	9.0	9.0	9.0	9.0	9.0	10.8	12.5	14.2	9.5	13.5	11.3
TENNESSEE	14.2	13.5	13.5	12.5	9.0	7.8	7.8	7.8	7.8	12.5	13.5	14.2	8.8	13.6	11.1
TEXAS	13.5	13.0	11.6	10.8	9.0	7.8	7.8	7.8	7.8	10.8	12.5	13.5	8.5	12.5	10.4
UTAH	15.0	14.2	13.5	12.5	9.0	7.8	7.8	7.8	7.8	10.8	12.5	14.2	8.7	13.3	10.9
VERMONT	15.0	15.0	14.2	13.5	9.0	9.0	9.0	9.0	9.0	13.5	14.2	15.0	9.6	14.5	12.0
VIRGINIA	15.0	14.2	13.5	12.5	9.0	7.8	7.8	7.8	7.8	12.5	14.2	15.0	8.8	14.0	11.3
WASHINGTON	15.0	15.0	14.2	13.5	9.0	9.0	9.0	9.0	9.0	12.5	14.2	15.0	9.7	14.3	11.9
WEST VIRGINIA	15.0	15.0	14.2	13.5	9.0	9.0	9.0	9.0	9.0	12.5	14.2	15.0	9.7	14.3	11.9
WISCONSIN	15.0	15.0	14.2	13.5	9.0	9.0	9.0	9.0	9.0	12.5	14.2	15.0	9.7	14.3	11.9
WYOMING	15.0	15.0	14.2	12.5	9.0	9.0	9.0	9.0	9.0	10.8	12.5	14.2	9.5	13.6	11.5

Source : Fax communication from Bob Johnson, EPA/OMS, April 10, 1991.
and June 11, 1990 and May 29, 1991 FEDERAL REGISTERS

Nationwide Annual Average:	9.4	11.4
Nonattainment Annual Average:	9.2	11.3

nonattainment areas within the State. RVP in non summer months is typically blended to conform to limits suggested by ASTM and is not usually regulated by EPA.

3.3.2 Liquid Temperature

Along with fuel volatility, the temperature of the fuel being dispensed and the temperature of the vehicle fuel tank affect the rate in which emissions occur. The warmer the temperature of the dispensed liquid or the vehicle fuel tank the more volatile the liquid becomes and the more emissions occur. Also, the temperature difference between the dispensed liquid and the liquid in the fuel tank can affect emissions. The loading of cool dispensed fuel into a warm tank will decrease emissions (like vapor shrinkage) and the loading of warm fuel into a cold vehicle tank can increase emissions (like vapor growth). The more typical situation is where you have cool liquid being dispensed into a warm vehicle tank. The empirically derived emission factor equation accounts for these temperature differences.

As with RVP, these key temperature parameters will vary with time of year and with geographical location. Table 3-4 presents dispensed fuel temperature presented by month for several regions in the country (Figure 3-3 indicates the regional boundaries).[16] As would be expected, dispensed fuel temperatures increase in the summer when RVPs decrease.

Table 3-5 presents average annual fuel differentials between the dispensed fuel and the fuel in the vehicle tank. Data are presented by region for an annual average ΔT, plus values for summer and winter months.[17] In addition, data are presented for a 5-month (May-September) and 2-month (July and August) ozone season.

3.4 EMISSION FACTOR CALCULATIONS

3.4.1 Vehicle Refueling

As discussed in Section 3.3, EPA Office of Mobile Sources empirically derived an equation to estimate

TABLE 3-4 MONTHLY AVERAGE DISPENSED LIQUID TEMPERATURE

	Dispensed Liquid Temperature (degrees F)												Weighted Average		
	JAN	FEB	MAR	APR	MAY	JUN	JUL	AUG	SEP	OCT	NOV	DEC	Summer (Apr-Sep)	Winter (Oct-Mar)	Annual
National Average	51	54	54	58	69	76	82	81	76	70	62	54	74	58	66
Region 1	43	45	48	53	66	74	78	78	72	66	59	46	70	51	61
Region 2	69	74	73	80	84	87	90	91	78	85	83	73	85	76	81
Region 3	54	57	61	67	76	82	83	84	79	76	67	54	79	62	70
Region 4	50	51	41	47	63	74	88	85	83	75	63	52	74	56	65
Region 5	54	-	-	-	72	77	83	83	79	74	67	58	79	63	72
Region 6	-	48	49	53	59	63	-	73	71	60	49	42	64	50	57

Source : McAnally, Michael and Dickerman, J.C. Summary and Analysis of Data From Gasoline Temperature Survey Conducted By American Petroleum Institute. Radian Corporation, May 1976.

Regional boundaries defined in Figure 3.3.

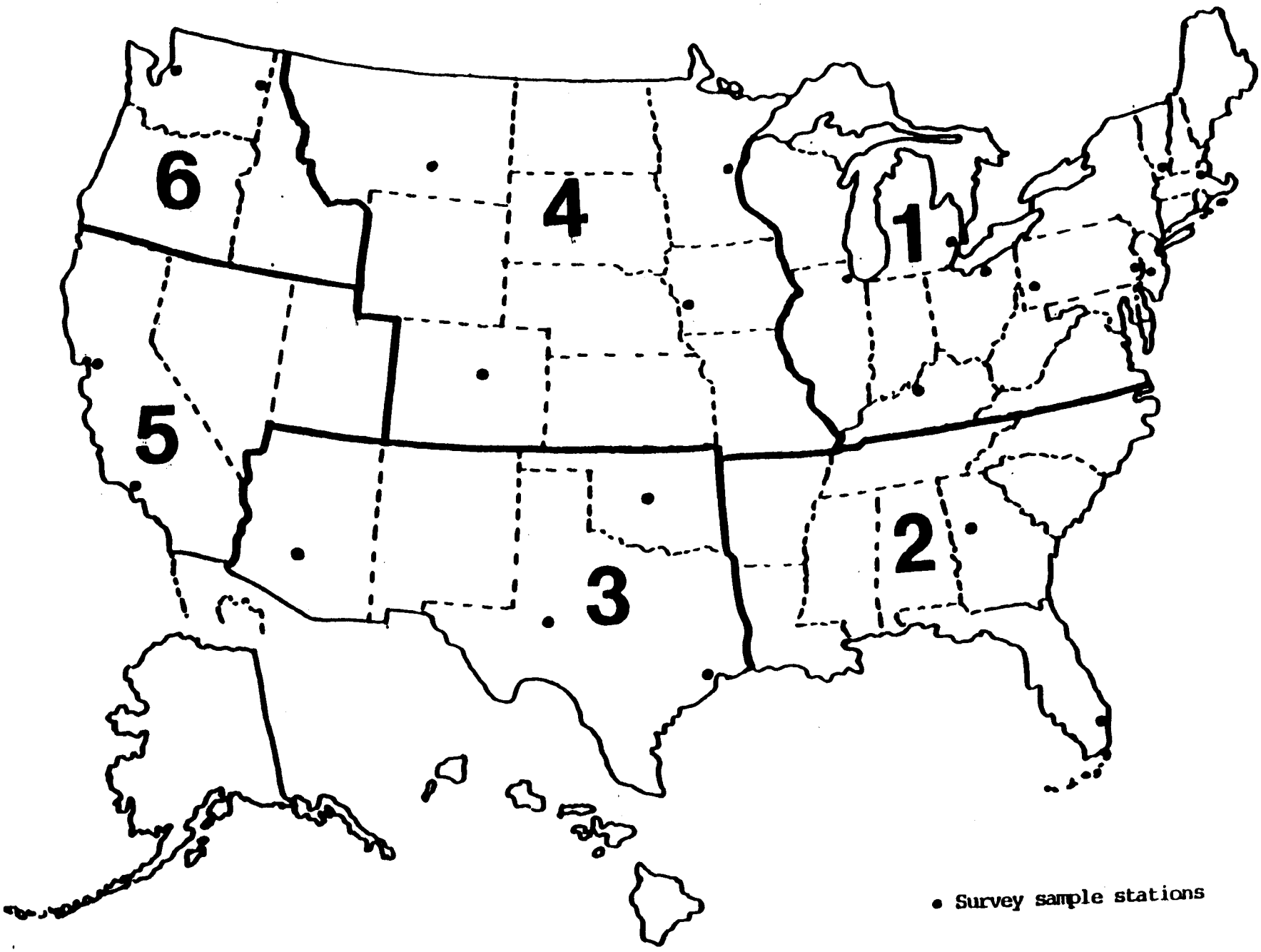

Figure 3-3. Region Boundaries

TABLE 3-5. SEASONAL VARIATION FOR TEMPERATURE DIFFERENCE BETWEEN DISPENSED FUEL AND VEHICLE FUEL TANK (ΔT), °F

	Temperature Difference (degrees F)				
	Average Annual	Summer (Apr-Oct)	Winter (Oct-Mar)	5-Month Ozone Season (May-Sep)	2-Month Ozone Season (Jul-Aug)
National Average	4.4	8.8	-0.8	9.4	9.9
Region 1	5.7	10.7	-0.3	11.5	12.5
Region 2	4.0	6.8	0.9	7.5	8.2
Region 3	3.7	7.6	-0.4	7.1	7.0
Region 4	5.5	11.7	-2.4	12.1	13.3
Region 5	0.1	3.9	-4.4	5.1	3.2

Source : Rothman, David, and Johnson, Robert. Technical Report - Refueling Emissions From Uncontrolled Vehicles. EPA/OMS, EPA-AA-SDSB-85-6, June 1985.

refueling emissions based on test data. This equation is as follows:

$$E_r = 264.2[(-5.909) - 0.0949(\Delta T) + 0.0884(T_D) + 0.485\ (RVP)]$$

where:

E_r = Emission rate, milligrams of VOC per liter of liquid loaded

RVP = Reid vapor pressure, psia

ΔT = Difference between the temperature of the fuel in the automobile tank and the temperature of the dispensed fuel, °F

T_D = Dispensed fuel temperature, °F

Using this emission factor equation, and the RVP and temperatures found in Tables 3-3, 3-4, and 3-5, automobile refueling emission factors can be derived for specific geographic locations and for different seasons of the year. Emission factors calculated using this equation should allow the estimation of emissions from automobile refueling for any area of the country. This approach is certainly more accurate than using the single value provided in EPA's Compilation of Emission Factors (AP-42).[18]

Table 3-6 illustrates how these emission factors can vary from location to location and by time of year for each State. Using the emission factor equations indicates variations of over 40 percent between summertime emissions rates found in Colorado (1,080 mg/L) and Florida (1,550 mg/liter). This indicates that an error would be introduced in emission planning activities if a single factor were used.

While this methodology has been used in prior EPA studies[19,20] to estimate refueling emissions, it should be noted that revised State implementation plan (SIP) emission inventory guidance issued by EPA in 1991[21] recommends that refueling emissions be calculated using emission factors

TABLE 3-6. MONTHLY AND GEOGRAPHIC VARIATIONS IN REFUELING EMISSION FACTORS

	JAN	FEB	MAR	APR	MAY	JUN	JUL	AUG	SEP	OCT	NOV	DEC	Weighted Average Summer (Apr-Sep)	Weighted Average Winter (Oct-Mar)	Weighted Average Annual
ALABAMA	1760	1870	1720	1610	1380	1450	1460	1390	1240	1880	1960	1850	1420	1840	1630
ALASKA (a)	1570	1640	1640	1490	1650	1720	1860	1840	1810	2020	1830	1640	1730	1740	1740
ARIZONA	1440	1380	1260	1090	1020	1060	1080	1110	990	1440	1400	1310	1060	1370	1220
ARKANSAS	1850	1870	1720	1610	1380	1450	1370	1390	1240	2000	2080	1940	1400	1910	1630
CALIFORNIA (b)	1550	1750	1850	1670	1060	1140	1280	1280	1190	1620	1660	1650	1270	1680	1470
COLORADO	1590	1510	1060	720	770	870	1150	1080	1080	1630	1570	1530	950	1480	1200
CONNECTICUT	1370	1420	1390	1140	970	1050	1150	1150	1110	1720	1640	1440	1090	1500	1290
DELAWARE	1370	1420	1390	1140	970	1050	1150	1150	1010	1590	1640	1440	1070	1480	1260
DIST. OF COL.	1370	1320	1300	1010	980	1050	1150	1150	1010	1590	1640	1440	1060	1440	1250
FLORIDA	1760	1870	1720	1610	1380	1450	1520	1550	1240	1880	1960	1850	1460	1840	1650
GEORGIA	1760	1870	1720	1610	1380	1450	1460	1390	1240	1880	1960	1850	1420	1840	1630
HAWAII (a)	1120	1190	1190	1050	1300	1470	1610	1580	1470	1570	1380	1190	1420	1280	1350
IDAHO (a,b)	1540	1400	1330	1060	750	840	1060	1080	1030	1240	1210	1260	970	1320	1150
ILLINOIS	1370	1420	1390	1070	920	1050	1120	1120	1010	1590	1610	1390	1050	1470	1260
INDIANA	1370	1420	1390	1140	970	1050	1150	1150	1010	1590	1640	1440	1080	1480	1270
IOWA	1590	1610	1280	840	770	1030	1350	1280	1240	1850	1790	1640	1090	1640	1350
KANSAS	1590	1510	1060	720	770	1030	1200	1130	1240	1630	1570	1530	1010	1480	1230
KENTUCKY	1370	1320	1300	1010	870	1050	1150	1150	1010	1590	1640	1440	1040	1450	1230
LOUISIANA	1760	1870	1720	1610	1380	1450	1460	1390	1240	1880	1960	1850	1420	1840	1620
MAINE	1370	1420	1390	1140	970	1050	1150	1150	1110	1720	1640	1440	1100	1500	1290
MARYLAND	1370	1420	1390	1140	970	1050	1150	1150	1010	1590	1640	1440	1080	1480	1280
MASSACHUSETTS	1370	1420	1390	1140	970	1050	1150	1150	1110	1720	1640	1440	1090	1500	1290
MICHIGAN	1370	1420	1390	1140	970	1050	1150	1150	1110	1720	1640	1440	1090	1500	1290
MINNESOTA	1590	1610	1280	970	870	1030	1350	1280	1240	1850	1790	1640	1130	1630	1360
MISSISSIPPI	1760	1870	1720	1610	1380	1450	1460	1390	1240	1880	1960	1850	1420	1840	1630
MISSOURI	1590	1510	1190	840	770	1030	1200	1130	1240	1850	1700	1530	1030	1560	1290
MONTANA	1590	1610	1280	840	770	1030	1350	1280	1240	1850	1790	1640	1100	1630	1340
NEBRASKA	1590	1610	1280	840	770	1030	1350	1280	1240	1630	1570	1530	1090	1530	1300
NEVADA (b)	1630	1750	1800	1620	1100	1140	1280	1280	1190	1580	1600	1620	1270	1660	1460
NEW HAMPSHIRE	1370	1420	1390	1140	970	1050	1150	1150	1110	1720	1640	1440	1100	1500	1290

TABLE 3-6. MONTHLY AND GEOGRAPHIC VARIATIONS IN REFUELING EMISSION FACTORS (CONTINUED)

NEW JERSEY	1370	1420	1390	1140	970	1050	1150	1150	1110	1720	1640	1440	1100	1500	1300
NEW MEXICO	1490	1340	1360	1150	1020	1060	1080	1110	1090	1610	1620	1440	1090	1480	1270
NEW YORK	1370	1420	1390	1140	970	1050	1150	1150	1110	1720	1640	1440	1090	1500	1290
NORTH CAROLINA	1850	1870	1850	1740	1380	1450	1460	1390	1240	2000	2080	1940	1450	1930	1680
NORTH DAKOTA	1590	1610	1280	970	870	1030	1350	1280	1240	1850	1790	1640	1130	1640	1350
OHIO	1370	1420	1390	1140	970	1050	1150	1150	1010	1590	1640	1440	1080	1470	1260
OKLAHOMA	1530	1510	1480	1290	1180	1160	1190	1210	1090	1610	1620	1530	1190	1550	1360
OREGON (a,b)	1540	1400	1330	1190	750	840	1060	1080	1030	1460	1380	1310	1000	1390	1180
PENNSYLVANIA	1370	1420	1390	1140	970	1050	1150	1150	1110	1720	1640	1440	1090	1500	1290
RHODE ISLAND	1370	1420	1390	1140	970	1050	1150	1150	1110	1720	1640	1440	1100	1500	1290
SOUTH CAROLINA	1760	1870	1850	1740	1380	1450	1460	1390	1240	2000	2080	1850	1460	1910	1670
SOUTH DAKOTA	1590	1610	1280	840	770	1030	1350	1280	1240	1630	1570	1530	1100	1530	1290
TENNESSEE	1850	1870	1850	1740	1380	1450	1460	1390	1240	2000	2080	1940	1450	1930	1680
TEXAS	1440	1450	1360	1200	1100	1110	1130	1160	1090	1610	1620	1440	1130	1490	1300
UTAH (b)	1730	1850	1960	1780	1180	1140	1230	1230	1190	1660	1720	1720	1280	1770	1510
VERMONT	1370	1420	1390	1140	970	1050	1150	1150	1110	1720	1640	1440	1100	1500	1290
VIRGINIA	1370	1320	1300	1010	870	1050	1150	1150	1010	1590	1640	1440	1040	1450	1240
WASHINGTON	1540	1500	1420	1190	750	840	1060	1080	1030	1460	1420	1360	990	1450	1210
WEST VIRGINIA	1370	1420	1390	1140	970	1050	1150	1150	1010	1590	1640	1440	1080	1470	1260
WISCONSIN	1370	1420	1390	1140	970	1050	1150	1150	1010	1590	1640	1440	1080	1480	1270
WYOMING	1590	1610	1280	840	770	1030	1350	1280	1240	1630	1570	1530	1090	1530	1300

(a) = Where data not available, national average values from Tables 3-4 and 3-5 used.

(b) = Where data not available, regional average values from Tables 3-4 and 3-5 used.

generated by MOBILE 4.1, EPA's mobile source emission factor computer model. MOBILE4.1 utilizes the same equation presented above to calculate a refueling emission factor. User supplied inputs for temperature and RVP are used to calculate an emission factor based on gasoline throughput (gm/gal). MOBILE4.1 also will convert this emission factor to one based on VMT by using assumptions for the on-road automobile population and the fuel economy for each model year. There is uncertainty introduced by using VMT as the parameter for calculating refueling emissions. First, the fact that a vehicle travels through a certain area does not indicate that the vehicle is refueled in the same area, and second, the use of fuel economy introduces another layer of uncertainty to the calculation. In the absence of accurate throughput data, refueling emissions may be estimated using VMT. However, it is suggested in MOBILE4.1 guidance that refueling emissions be calculated using throughput data instead of VMT.[22]

3.4.2 Spillage

Several recent studies have been conducted comparing the occurrences of spillage during refueling events both with and without Stage II vapor recovery equipment. The studies are: (1) a 1989 study by the American Petroleum Institute[23]; (2) a 1990 study by the California Air Resources Board[24]; and (3) a 1983 study by the Bay Area Air Quality Management District.[25] A fourth study was conducted in 1987 by Lundberg.[26] The Lundberg study provided some simplified frequency information but no quantification of spillage or emissions. The survey contained only observances of spillage along with other questions and observations taken during refueling episodes. Since no quantification of spills was contained in the study, it is not summarized here.

The three studies were similar in that they observed refueling at both conventional and Stage II systems, documented spillage frequency, and estimated the quantity of

spillage that occurred. Spillage quantities were estimated by correlating spill area measured on the ground with volume quantities of liquid gasoline spilled. Table 3-7 summarizes the results of these studies.

The API study was conducted at 20 "well maintained" Stage II systems in the Washington, DC area and 20 conventional systems in Baltimore. Considerable effort was taken to assure that the Stage II and conventional stations were comparable in throughput, number of nozzles, and location (urban inner city). Spills were quantified by measuring wetted surface area caused by the drip or spill that occurred during the refueling cycle. Inspectors/observers were trained by spilling specific liquid quantities and measuring the resulting spill area. Spill areas were calibrated at each test site to take into account differences in surface porosity, fuel characteristics, and ambient conditions. The API study found an increase in spill frequency with Stage II equipment and an increase in spill quantity.

The CARB study was similar to the API study in methodology using spill size versus quantity techniques. In addition to measurable spills on the ground, CARB included spills along the side of the vehicle. The CARB study took place at 31 Stage II systems in Sacramento and 21 conventional stations north of Sacramento. Data were reported for all spills and adjusted to account for one large spill that CARB felt biased the results. API made no adjustments to the data collected at the Washington, DC and Baltimore stations for any large spills. To convert spill size/volume data in the CARB study to quantity data, two assumptions had to be used: (1) gasoline density was 0.67 gm/ml (the same used in the Stage II recovery credit calculations), and (2) the average volume per refueling event was 10 gallons. The CARB study found a lower

TABLE 3-7

SUMMARY OF STAGE II/CONVENTIONAL REFUELING SPILLAGE DATA

	Observations		Frequency		gm/liter		gm/gallon		mg/liter	
	Conven.	Stage II	Conven.	Stage II	Conven.	Stage II	Conven.	Stage II	Conven	Stage II
Bay Area (~1983)										
Reported Conven. Data	6,750		0.32		3.51		0.30		80.0	
Balance System		1,254		0.39		1.15		0.12		31.6
Post '78 Balance		310		0.40		0.43		0.05		13.9
Vacuum Assist		737		0.31		0.66		0.07		17.6
Post '78 Vac. Ass.		118		0.28		0.32		0.03		8.5
Red Jacket		83		0.13		0.67		0.08		19.6
Post '78 Red Jacket		9		0.00		0.00		0.00		0.0
CARB Study (July 1991)	1,496	1,515	0.30	0.22	2.21 *	1.59	0.22 **	0.16	58.3	41.9
API Study (June 1989)	1,357	1,278	0.63	0.66	1.20	1.74	0.14	0.22	36.9	58.9

* Assumed gasoline density of .67 gm/ml.
** Assumed 10 gallons per refill event.

frequency of spills and smaller quantities of spills with Stage II equipment. It should be noted that spillage determinations are part of the certification procedures for Stage II equipment in California. To pass certification, the Stage II equipment must have spillage quantities less than conventional equipment.

The third study was conducted by the Bay Area AQMD. The results of this study was obtained from the Bay Area, but no narrative was supplied. From the data supplied and a conversation with Bay Area AQMD it was determined that the test program was similar to that of the CARB and API studies. The conventional nozzle study dates back to a 1974 study by Scott Environmental. This conventional nozzle study by Scott was the basis for the AP-42 emission factor for spillage from automobile refueling (80 mg/liter). The Stage II data were obtained from facilities in the Bay Area. The Bay Area data indicated a slight increase in spill frequency with Stage II equipment but a significantly lower emission rate.

It is difficult to draw any specific conclusions on the relative merit of the studies. Each appeared to incorporate similar procedures, however, slightly different results were obtained. The results of all studies are in the same order of magnitude and in the same approximate range. This further complicates the task of evaluating spillage information. It is impossible, based on this data, to conclude one way or the other on whether Stage II or conventional refueling results in higher spillage. This difficulty in concluding a definitive spillage quantity must be put in perspective. The difference in this spillage data represents less than one percent of the emissions from the total refueling event.

3.4.3 Emptying Losses

Emissions have also been reported at service stations due to storage tank emptying and breathing losses. Breathing losses are attributable to gasoline evaporation due to barometric pressure and temperature changes. Breathing loses in fixed volume storage tanks are caused by vapor and liquid expansion and contraction due to diurnal temperature changes. As temperatures increase,

vapor volume increases pushing vapor out of the vent pipe (out-breathing). When temperatures decrease, vapor volume decreases and air is drawn into the tank (in-breathing). Breathing loss emissions have traditionally been minimal at service stations since storage tanks have generally been located underground, insulated by the earth, with a very stable temperature profile. However, breathing losses from service station storage tanks are becoming more prevalent due to the popularity of aboveground storage tanks and the installation of vaulted underground storage tanks. Aboveground storage tanks are more susceptible to temperature and pressure changes and thus are more likely to experience both vapor growth and vapor shrinkage. It is also reported that the double wall, or "vaulted" underground storage tanks being installed to comply with underground storage tank (UST) regulations are more susceptible to thermal effect and therefore breathing losses.[27,28]

Emptying losses occur when gasoline is withdrawn from the tank allowing fresh air to enter. This enhances evaporation (i.e., vapor growth) and causes vapors to be vented from the pipe as the saturated gasoline vapors tend to occupy a larger volume than air. EPA's AP-42 cites an average breathing emission rate of 120 milligrams per liter of throughput.

This original source for this factor was a Journal of the Air Pollution Control Association November 1963 article based on a study by the Air Pollution Control District of Los Angeles County (LAAPCD). This article was entitled "Emissions from Underground Gasoline Storage Tanks", and lists as authors Robert Chass, Raymond Holmes, Albert Fudurich, and Ralph Burlin of the Los Angeles District.[29] This article describes emptying losses as follows.

> When an automobile is fueled, gasoline is pumped from the underground tank, causing air to be inhaled through the vent pipe, the volume being approximately equal to the volume of gasoline withdrawn. The air then becomes saturated with gasoline vapors, tending to occupy a larger volume. This in turn, causes the vapor-air mixture to exhaust from the underground tank until a pressure equilibrium is attained.

The mg/l emission factor listed in AP-42 was estimated in this study by measuring air expelled from the vent pipe after vehicle fueling and applying a theoretical gasoline vapor to air ratio of 40 percent. They concluded that it was impractical, in their study, to collect representative vapor samples for analysis. While the emission factor of one pound per thousand gallon of throughput (approximately 120 mg/l) was presented in this study, it also discussed complexities with estimating these emissions. The study concluded:

> Factors affecting the breathing losses are complex and interrelated, depending on the service station operation, pumping rate, frequency of pumping, ratio of liquid surface to vapor volume, diffusion and mixing of air and gasoline vapors, vapor pressure and temperature of the gasoline, the volume and configuration of the tank, and the size and length of the vent pipe. Because of these many variables involved, much more data from a number of representative retail stations would be necessary before an accurate determination of overall, basin-wide breathing losses could be made.

Since the time of this original analysis, several studies have been conducted to attempt to account for many of these variables. These range from studies that conclude there are no VOC emptying losses to those reporting emissions much higher than those predicted by the AP-42 emission factor.

Dr. R.A. Nichols has studied this subject extensively throughout the 1970s and 1980s. In a 1987 paper on the subject[30], the conclusion is that the model used in the LAAPCD analysis ignored the effect of the vent line. Dr. Nichols states:

> Air enters a nearly underground tank containing saturated vapor. Air will spread over a large and heavier vapor layer enhancing diffusion into this layer. As the surface layer gains vapor, the lighter upper vapor, which is essentially air, is vented from the tank through the vent line. The air-vapor mixture expelled from the tank to the vent line occupy only a small fraction of the vent line volume. The air-vapor mixture remains in the vent pipe for some time because of low diffusion rate. Subsequently, this mixture is inhaled back into the tank in the next refueling. Consequently, the vent line acts as a buffer to

effectively ensure that only air enters and leaves the vent during intermittent refueling.

Dr. Nichols indicates that vapor emissions could only occur during periods of long refueling inactivity. He concludes that high fueling activity followed by long periods of inactivity will lead to the highest (and possibly the only) vapor venting emissions. This paper did not provide any emission factor for these emissions.

The California Air Resources Board (CARB) conducted a study to estimate storage tank breathing losses in 1987.[31] Emissions were measured at a low throughput (15,000 gallons per month per tank) station and a high throughput (50,000 gallons per month per tank) station. The study found different results for the two stations. The emission factor calculated for the low throughput station was 0.92 lbs VOC per 1000 gallon throughput (110 mg/l), and 0.21 pounds per 1000 gallon (25 mg/l) for the high throughput station. Observations made during the testing indicated that mass emissions from the underground storage tanks appeared to occur during periods when dispensing of product was the lowest, that emissions were at a minimum during conditions of near continuous fuelings, and that the highest mass emissions occurred during intermittent vehicle fuelings followed by relatively long periods of dispensing inactivity. The differences in emission factors at the high and low throughput stations are explained in these observations.

The National Institute for Petroleum and Energy Research (NIPER) conducted a study and reached conclusions partially in agreement with those of both Dr. Nichols and CARB.[32] NIPER's study concluded that no vent losses would occur if the dispensing frequency were high enough and that vent losses would be markedly reduced if the height of the vent was increased. The rationale for the origin of emissions agreed with the discussion provided in the original LAAPCD study. This was that emissions were due to 1) air induction through the vent, 2) dilution of the hydrocarbon vapor in the tank, 3) saturation of the diluted vapor by evaporation of the liquid fuel, resulting in increased

pressure in the tank. If this pressure was greater than that exerted by the column of vapor in the vent, emissions resulted. The emissions measured for a high flow stations were 0.85 and 1.05 grams per gallons dispensed (225 and 277 mg/l, respectively).

A comparison of the CARB and NIPER studies shows that the NIPER emission factors are much higher than those from CARB. Recognizing this discrepancy, CARB and NIPER met on August 21, 1987 to discuss the differences.[33] The conclusion reached at this meeting was that NIPER's results should be adjusted because the dispensing period (8 hours) during NIPER's tests was not considered representative of the effective dispensing period at a high volume station. Adjustments were made and it was determined that a more appropriate emission factor for the NIPER data is 0.6 lbs/1000 gallons (72 mg/l) for a high throughput station.

In summary, these studies indicate that the emissions from storage tank emptying are affected by several factors, most notably the height of the vent pipe and the vehicle fueling activity. For the purposes of the analysis in this document, it is believed that the AP-42 factor of 120 mg/l represents an emission factor that may be very conservative, but is not unrealistic.

3.5 MODEL PLANT EMISSION ESTIMATES

Model plants, as described in Chapter 2, are used to represent the industry for cost and emission estimation purposes. The data presented earlier in this chapter and in Chapter 2 were used to calculate emissions for each model plant. Table 3-8 summarizes model plant emissions using an emission factor calculated with the overall national annual average RVP of 11.4 psi, a ΔT of 4.4°F and a T_D of 66.0°F. Using emission factors in Table 3-8 and the gasoline throughput associated with each model plant allows the calculation of model plant emission estimates for any geographical area. The equation for estimating model plant emissions is as follows:

TABLE 3.8. VOC EMISSIONS FROM REFUELING FOR SERVICE STATION MODEL PLANTS[a]

Service Station Model Plants[b]	Average Throughput Liters/Month	Average Emission Factor mg/liter[c]	Model Plant Emissions Mg/yr
Model Plant 1	23,000	1,340	0.4
Model Plant 2	76,000	1,340	1.2
Model Plant 3	132,000	1,340	2.1
Model Plant 4	234,000	1,340	3.9
Model Plant 5	700,000	1,340	11.2

[a] Not including emissions associated with spillage and tank emptying/breathing.

[b] Model plants described in Chapter 2.

[c] Average emission factor based on the following:

RVP	11.4
Dispensed fuel temp.	66.0
Dispensed fuel/fuel tank temp. diff.	4.4

$$MP_E = (E_r)(MP_T)(12 \text{ months/year})/(10^9 \text{mg/Mg})$$

where:

MP_E = Model plant emissions, Mg VOC/yr

E_r = Emission rate, mg VOC/liter

MP_T = Model plant gasoline throughput, liters/month

3.6. REFERENCES

1. Furey, Robert and Bernard Nagel. Composition of Vapor Emitted from a Vehicle Gasoline Tank During Refueling. Society of Automobile Engineers (SAE) Technical Papers Series 860086. February 1986.

2. Gasoline Marketing Industry (Stage I) - Background Information for Proposed Standards, Preliminary Draft. U.S. Environmental Protection Agency, Research Triangle Park, NC. November 1991.

3. Evaluation of Air Pollution Regulatory Strategies for Gasoline Marketing Industry. U.S. Environmental Protection Agency, Office of Air Quality Planning and Standards and Office of Mobile Sources. Ann Arbor, MI. Publication No. EPA-450/4-84-012a. July 1984.

4. Draft Regulatory Impact Analysis: Proposed Refueling Emission Regulations for Gasoline-Fueled Motor Vehicles -- Volume I - Analysis of Gasoline Marketing Regulatory Strategies. U.S. Environmental Protection Agency. Office of Air Quality Planning and Standards and Office of Mobile Sources. Ann Arbor, MI. Publication No. EPA-450/3-87-001a. July 1987.

5. Pacific Environmental Services, Inc. Description of Analysis Conducted to Estimate Impacts of Benzene Emissions from Stage I Gasoline Marketing Sources. Prepared for U.S. Environmental Protection Agency. Research Triangle Park, NC 27711. August 1989.

6. Design Criteria for Stage I Vapor Control Systems Gasoline Service Stations. U.S. Environmental Protection Agency, Office of Air Quality Planning and Standards, Research Triangle Park, NC 27711. November 1975.

7. Norton, R.L., R.R. Sakaida, and M.M. Yamada (Pacific Environmental Services, Inc.). Hydrocarbon Control Strategies for Gasoline Marketing Operations. Prepared for U.S. Environmental Protection Agency. State Publication No. EPA-450/3-78-017. April 1978.

8. Telecon. Bowen, E., Pacific Environmental Services, Inc. with Bradt, R., Hirt Engineers, U.S. Environmental Protection Agency, September 25, 1991. Comments on preliminary draft technical guidance document.

9. Letter, from Kunaniec, K., Bay Area Air Quality Management District, to Shedd, S., U.S. Environmental Protection Agency. July 31, 1991. Comments on preliminary draft technical guidance document.

10. Rothman, David, and Robert Johnson. Technical Report - Refueling Emissions from Uncontrolled Vehicles. Prepared for U.S. Environmental Protection Agency, Office of Mobile Sources. Ann Arbor, MI. Publication No. EPA-AA-ADSB-85-6, June 1985.

11. Motor Gasolines, Summer 1990 and Winter 1989-1990. National Institute for Petroleum and Energy Research. Bartlesville, Oklahoma. February 1991 and June 1990.

12. Volatility Regulations for Gasoline and Alcohol Blends Sold in Calendar Years 1991 and Beyond. Federal Register, Vol. 55, No. 112, 23658. June 11, 1990.

13. Clean fuels rules and guidelines negotiated rulemaking advisory committee. Federal Register, Vol. 56, No. 103, 24157. May 29, 1991.

14 Fax communication to Norton, Robert, Pacific Environmental Services, Inc., from Johnson, Robert, U.S. Environmental Protection Agency, Office of Mobile Sources. April 10, 1991.

15. Reference 12.

16. McAnnally, Michael and J.L. Dickerman (Radian Corporation). Summary and Analysis of Data from Gasoline Temperature Survey Conducted by American Petroleum Institute. May 1976.

17. Reference 10.

18. Compilation of Air Pollutant Emission Factors, Fourth Edition (AP-42). Section 4.4 Transportation and Marketing of Petroleum Liquids. September 1985.

19. Reference 3.

20. Reference 4.

21. Procedures for the Preparation of Emission Inventories for Carbon Monoxide and Precursors of Ozone Volume I: General Guidance for Stationary Sources. Prepared for U.S. Environmental Protection Agency, Research Triangle Park, NC. Publication No. EPA-450/4-91-016. May 1991.

22. User's Guide to MOBILE4.1. EPA-AA-TEB-91-01. U.S. Environmental Protection Agency. Office of Mobile Sources. Ann Arbor, MI. July, 1991.

23. A Survey and Analysis of Liquid Gasoline Released to the Environment During Vehicle Refueling at Service Stations. American Petroleum Institute. API Publication No. 4498. June 1989.

24. Memorandum from Fricker, Robert L., California Air Resources Board to Morgester, James T., California Air Resources Board. April 18, 1991. Investigation of Gasoline Spillage at Retail Service Stations.

25. Fax transmission from Kunaniec, K. Bay Area Air Quality Management District, to Norton, R., Pacific Environmental Services, Inc. September 19, 1991. Data from Bay Area Spillage Study.

26. Stage II Survey Statistical Data Report. Lundberg Reports Corporation. Fredericksburg, VA. August 1987.

27. Reference 8.

28. Reference 9.

29. Burlin, R., and A. Fudiruch. Air Pollution From Filling Underground Gasoline Storage Tanks. Los Angeles Air Pollution Control District. December 1962.

30. Nichols, R.A. Service Station Underground Tank Breathing Emissions. R.A. Nichols Engineering. October 13, 1987.

31. Memorandum. Simeroth, D.C., California Air Resources Board, to Cackette, T., California Air Resources Board, September 15, 1987. Determination of Mass Emissions from Underground Storage Tanks.

32. National Institute for Petroleum and Energy Research. Evaporative Losses from a Vented Underground Gasoline Storage Tank (with addendum discussing August 24, 1987 meeting with CARB). Undated.

33. Reference 32.

4.0 CONTROL TECHNOLOGY

This Chapter provides a basic technical discussion of Stage II technology and equipment. Phase II vapor recovery is also used to describe this technology. However, this document uses the terminology, "Stage II". While the fundamental concept of Stage II vapor recovery is simple, the practical application becomes quite complex. There are many components that have small but important roles in Stage II systems. The initial sections of this chapter discuss the types of Stage II systems and the system components.

Excessive equipment malfunctions and user dissatisfaction have been traditional stumbling blocks to Stage II program implementation. Where there were problems with earlier generations of equipment a discussion of corrections or improvements has been included.

Stage II originated in California and this State has continued to be at the center of developing Stage II technology. Fundamental to the Stage II program in California (as well as the rest of the country) is the equipment certification program conducted by the CARB. This program is also discussed in the chapter. Much of the information regarding system components and CARB certification is taken from a paper presented at the 83rd annual meeting of the Air and Waste Management Association in June, 1990, entitled "Gasoline Vapor Recovery Certification", by Laura McKinney of CARB.[1]

Finally, the chapter discusses the effectiveness of Stage II systems. Results of studies of in-use effectiveness and methodologies for determining program effectiveness are provided.

4.1 TYPES OF STAGE II SYSTEMS

Loading losses due to the refueling of motor vehicles can be significantly reduced by Stage II systems. There are currently two basic types of Stage II systems in use in the United States. These are the vapor balance system and the vacuum assist system.

4.1.1 Vapor Balance System

The balance type vapor recovery system operates on the principle of positive displacement during gasoline transfer operations. Balance systems use pressure created in the vehicle fuel tank by the incoming liquid gasoline and the slight negative pressure created in the storage tank by the departing liquid to transfer the vapors through the combination fuel dispensing/vapor collection nozzle, through the vapor passage, and into the service station underground storage tank. Because a slight pressure is generally created at the nozzle/fillpipe interface, effective operation requires that a tight seal be made at the interface during vehicle fuelings to minimize vapor leakage into the atmosphere. Also, it is very important that the vapor path remain unobstructed.

The basic design of a balance system is shown in Figure 4-1. As illustrated, the vapors and liquid are simply "balanced" between the vehicle and underground storage tanks.

4.1.2 Vacuum Assist System

An assist system is designed to enhance vapor recovery at the nozzle/fillpipe interface by drawing in vapors using a vacuum. Because of this design, assist systems can recover vapors effectively without a tight seal at the nozzle/fillpipe interface. There are four assist systems that are currently available and certified by the California Air Resources Board (CARB): the Hasstech, the Healy, the Hirt, and the Amoco Bellowless Nozzle Systems. The Hirt and Hasstech Systems have a vacuum-generating device, such as a

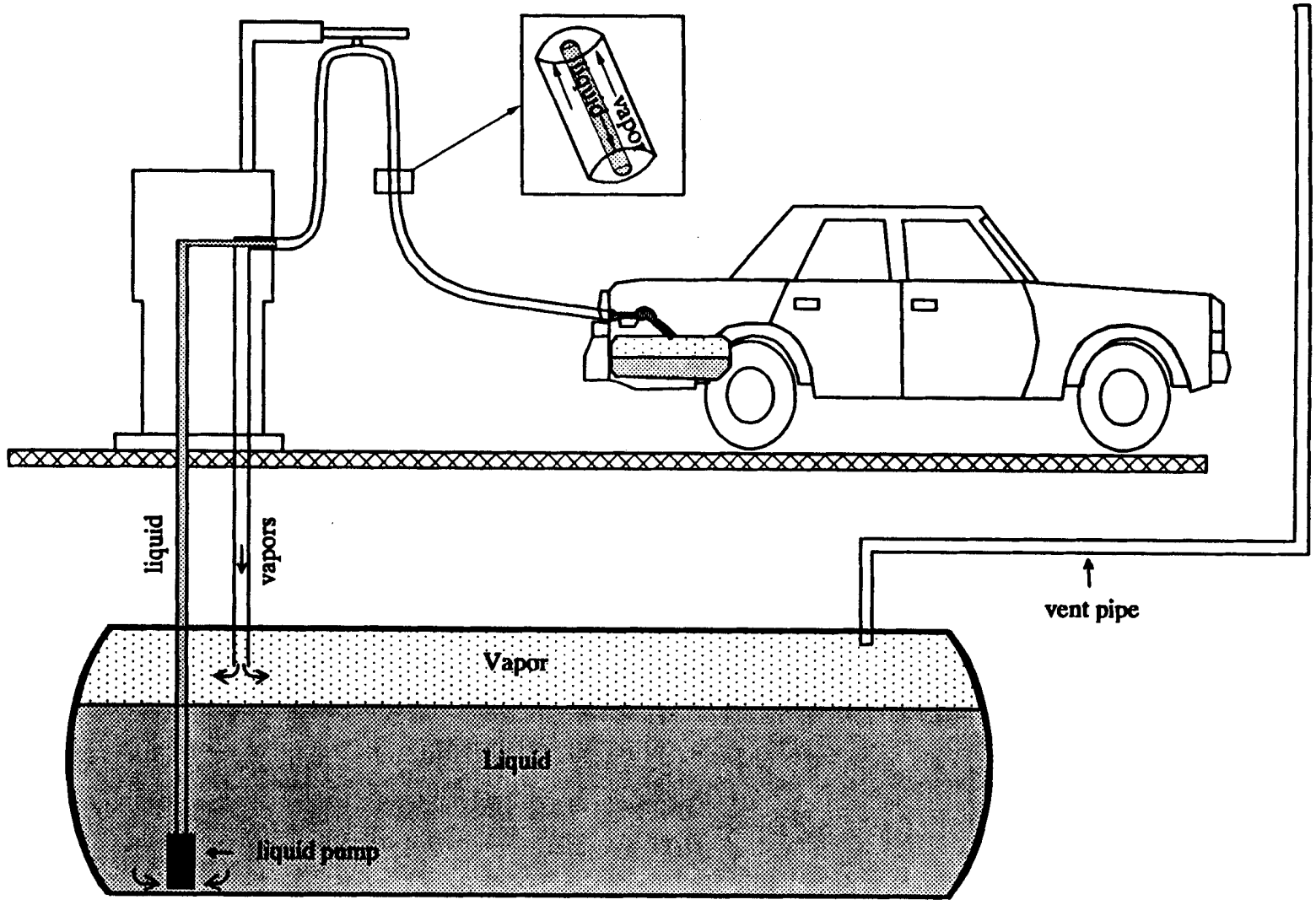

Figure 4-1. Vapor Balance System

compressor or turbine that creates a vacuum such that vapors are pulled from the vehicle tank into the storage tank. They utilize a processing unit for combustion of the excess vapor, while the Healy system creates a vacuum by spraying liquid gasoline through saturated vapor by way of a jet, or multi-jet pump, and the vapor is driven back to the underground storage tank. A vacuum is created in the bellowless system by a hydraulic pump driven by the dispensed gasoline. The excess vapors are drawn through a coaxial spout on the nozzle. The Red Jacket aspirator assist system was one of the first true aspirator assist systems to be certified, but is no longer produced. It was fully equipped with an aspirator, a modulating valve, and a check valve; but it has not been sold since the early 1980's.

The Hasstech System, shown in Figure 4-2, uses a blower as a vacuum generating device that is activated whenever gasoline is dispensed. As product is dispensed, the vapors are drawn through the vapor hose until they encounter a valve that is located inside the dispenser. The purpose of this valve is to prevent ambient air flow into the vapor recovery line while other nozzles are in use. Vapors pass through the valve, then through the blower located between the dispensers and the storage tanks. This blower is capable of a pressure differential of 20 inches water column (in wc), which means that the blower readily pushes the vapor into the tanks. When there is an excess volume of vapor from either Stage II or Stage I, the tank pressure rises. When the pressure reaches approximately 1 in wc, a switch within the processor is activated and this initiates processor operation. The processor incinerates the excess, then automatically turns off when pressure equilibrium is restored. This system is closed with a pressure/vacuum relief valve on the tank vents. There is also a pressure gauge located on the vent line that allows the owner/operator to monitor the pressure of the system.

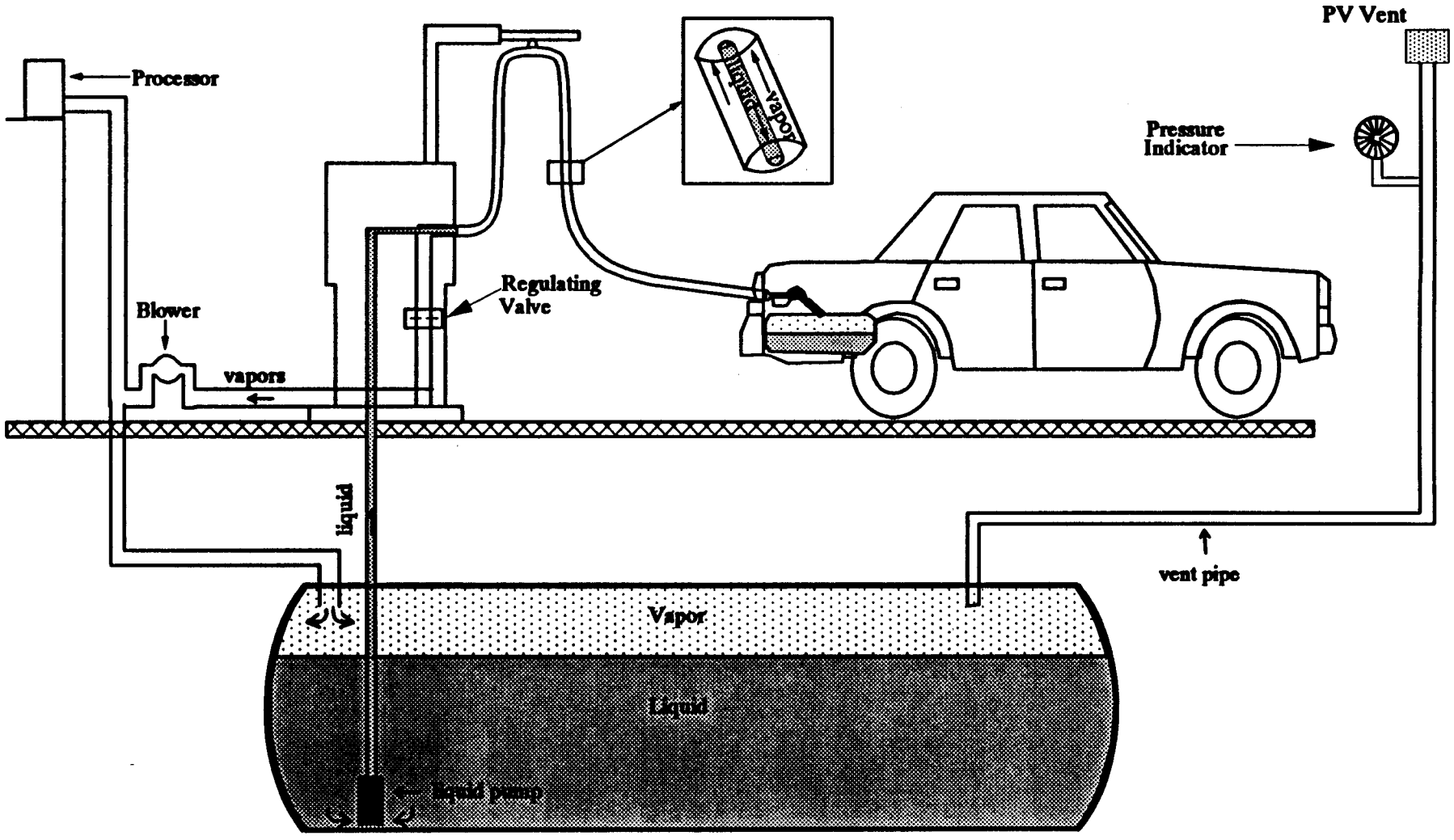

Figure 4-2. Hasstech Assist System

The Hirt System is a vacuum assisted, vapor processing Stage I-Stage II control system, shown in Figure 4-3. The system is piped as a balance system, returning vapor from nozzles to storage tank free space through unobstructed vapor piping. An assisting vacuum is held in the storage tanks by a vapor processor. The processor is piped into the top of the storage tank vents which are manifold together and closed from the atmosphere. The processor contains a regenerative vapor turbine which prevents pressurizing by removing excess vapor to the balancing forces, and a thermal oxidizer which destroys only that vapor. If for any reason the processor should shut down, the system will function as a normal vapor balance system. The processor is automatically activated if the vacuum degenerates to neat atmospheric and remains activated until the vacuum reaches about 0.5 in wc.

Another example of an assist system is the Healy System as shown in Figure 4-4. This system operates under negative pressure derived from a gasoline driven jet pump. Originally the jet pumps were located in the dispensers, however, the newer system pumps may be in the vapor return piping at the storage tank. The unit located at the tank is called a multi-jet or mini-jet, depending on the number of jet pumps it contains. The jet pump draws a strong vacuum that creates enough suction to draw any excess liquid that may be present in the vapor passage. When the pump switch is activated, gasoline under pressure is provided to the jet pump. At this point an internal pressure sensing valve opens and a small stream of gasoline flows through the jet pump back to the underground storage tank. Vacuum produced by the mini-jet is immediately produced at a controlled maximum level (15 to 70" wc). When the nozzle is in use the vapors are recovered through the jet pump and returned to the gasoline storage tank. A vacuum regulatory, which has a

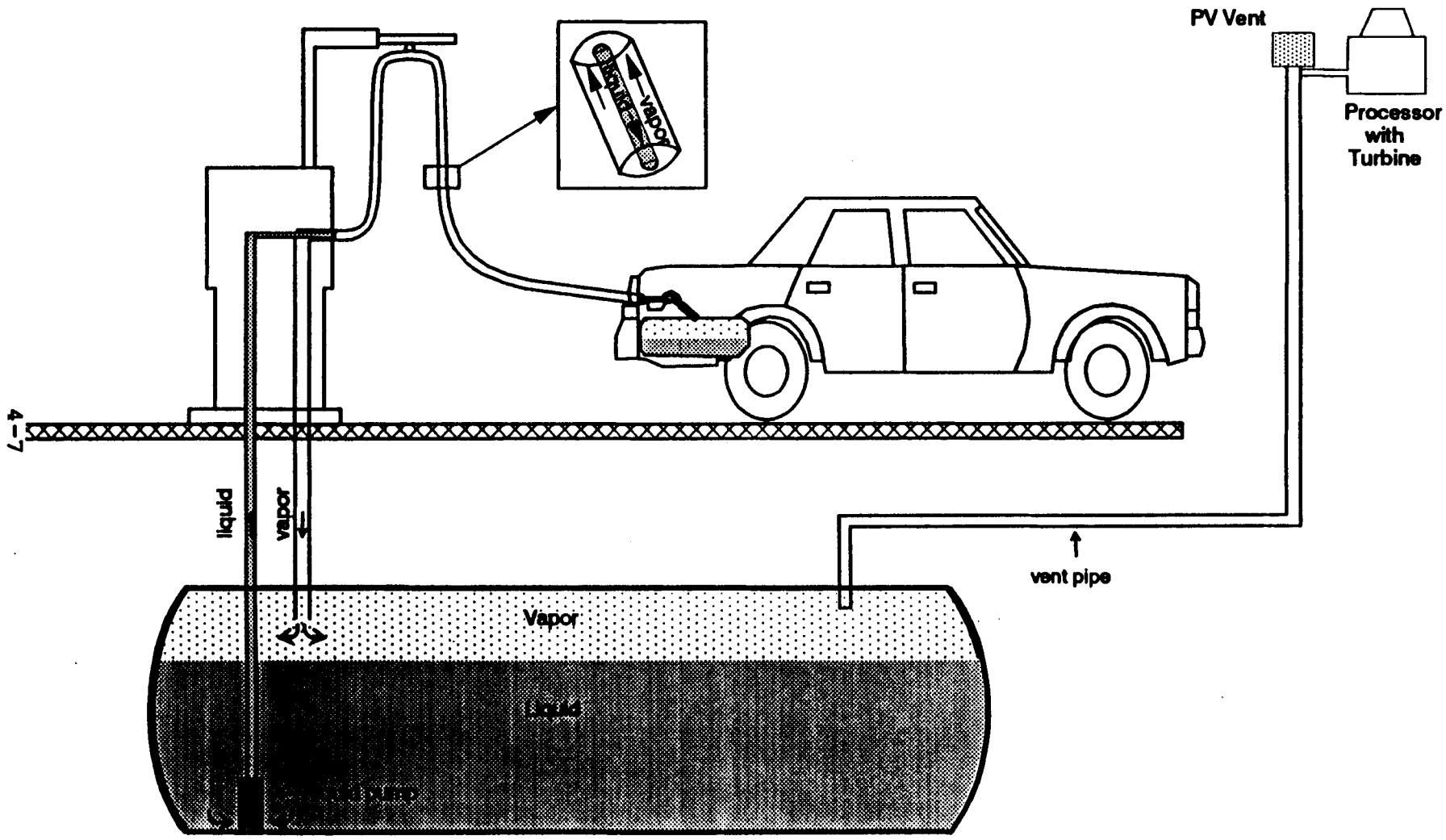

Figure 4-3. Hirt Assist System

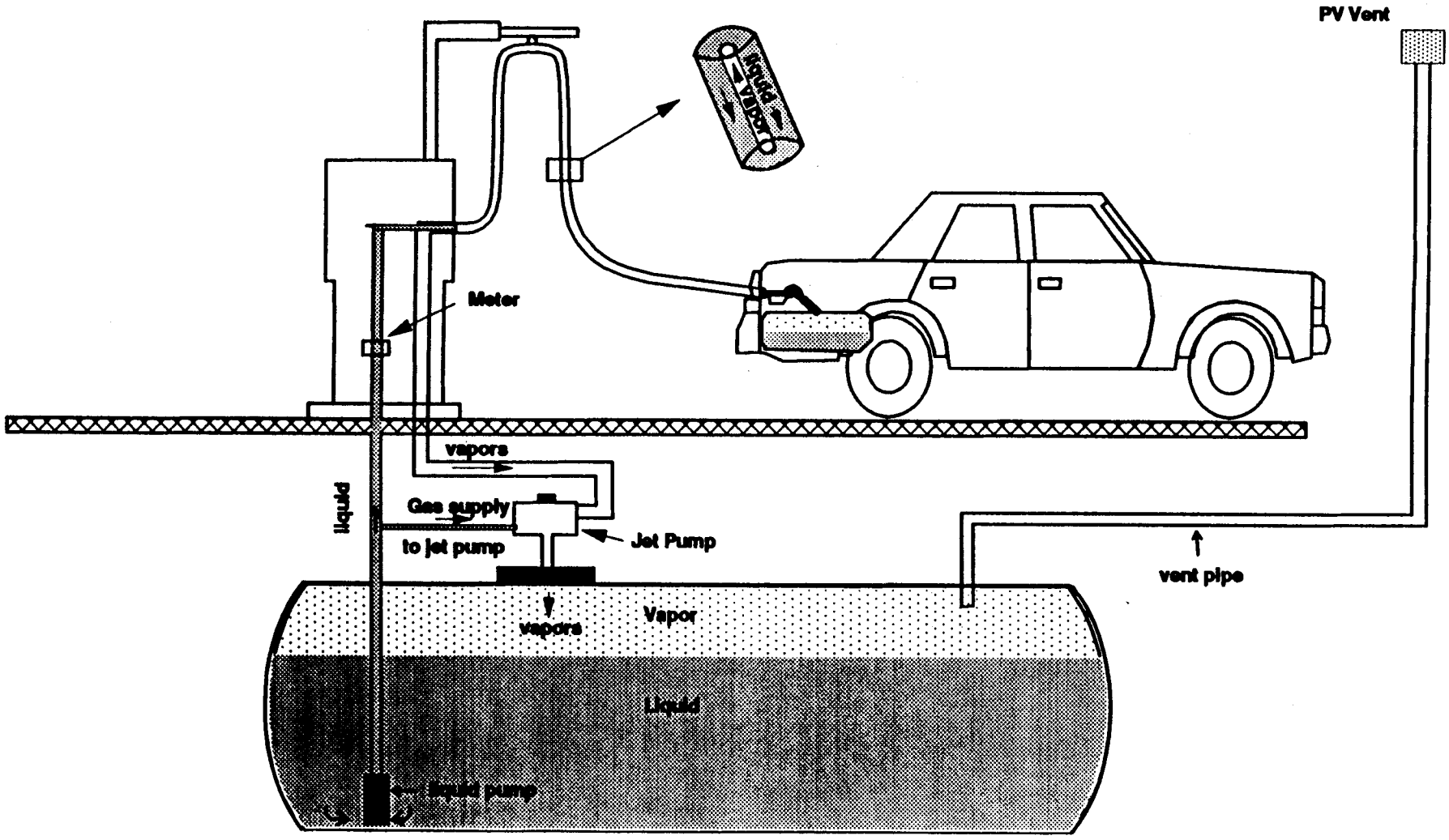

Figure 4-4. Healy Assist System

0.17 inch diameter orifice, is located within the nozzle and monitors this pressure. This opens into a pressure regulated chamber that adjusts the flow of vapors and air through the vapor recovery line. The regulator in the nozzle is designed to open the vapor path when pressure inside the nozzle is slightly above atmospheric pressure. It also closes the vapor path when the pressure becomes slightly negative; and this prevents excess air from entering the system. This also keeps a slight vacuum (0 to .25 in wc) at the nozzle/fillpipe interface and a tight seal is not necessary between the vehicle tank and the nozzle fillpipe. Because of this pressure regulator, the high vacuum in the vapor return line is not at the nozzle/fillpipe interface. There is no need for an incineration device with this system, because the amount of ambient air drawn into the system is kept at a minimum. Healy Systems which have the mini-jet or multi-jet unit are required to have a pressure/vacuum (P/V) valve on the vent pipes. The pressure setting of this valve is 1" wc.

Another type of vacuum system, the bellowless nozzle system shown in Figure 4-5, develops suction by a dual chamber gasoline driven vacuum pump. Currently, the only certification for a bellowless nozzle has been issued to Amoco Oil Company. A vacuum is created by a hydraulic pump driven by the dispensed gasoline. The vapors are drawn through spout openings in a bellowless nozzle into the underground tank. The vacuum is regulated by the flow of fuel, and the ratio of gasoline dispensed to vapors collected is approximately one-to-one. Because the vapors are drawn into the tank at this "one-to-one" ratio, excess vapors are not generated, and incineration is not necessary. In addition, the vapor does not contact the liquid driving the pump, thus not creating additional evaporation or misting into the air-vapor mixture. The bellowless system also has a P/V valve on the vent pipes. The current

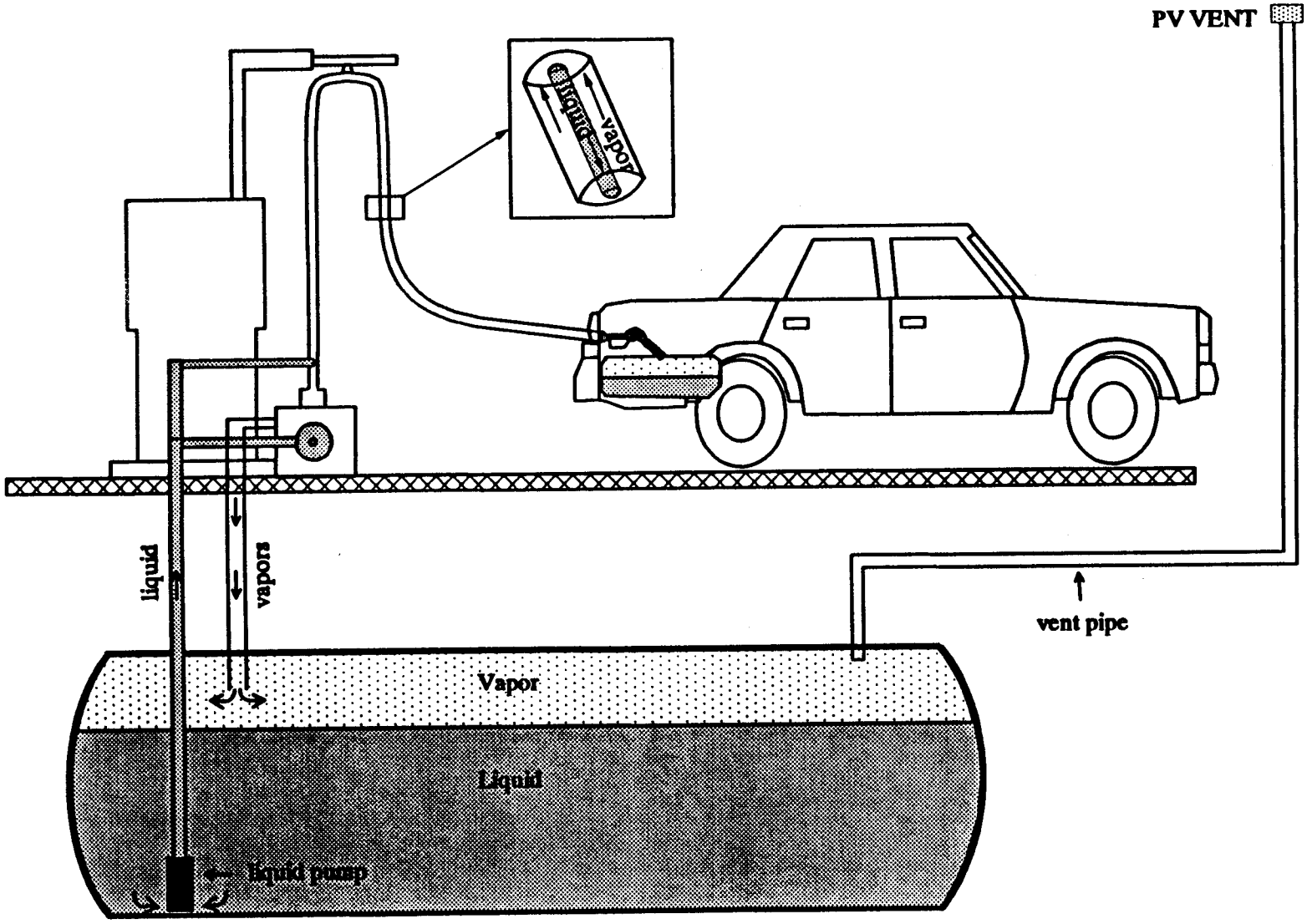

Figure 4-5. Amoco Bellowless Nozzle System

settings are 8 oz. and -1/2 oz. The system is under additional testing and may be certified by CARB with different settings but a P/V valve will be required.

4.2 SYSTEM COMPONENTS

A more complete understanding of the technology of Stage II vapor recovery may be gained by considering the equipment on an individual component basis. In this section, the function and operation of components are discussed as well as a presentation of traditional problems and improvements made to Stage II equipment.

4.2.1 Vapor Recovery Nozzles

The collection of gasoline vapors at the vehicle-fillpipe interface is the starting point for a Stage II vapor recovery system. The component vital to this step is the combination fuel dispensing/vapor collection nozzle. The nozzle is responsible for dispensing gasoline into the vehicle fuel tank while simultaneously collecting the vapors being forced from the tank and routing them through the vapor recovery hose and the underground piping to the storage tank. Due to differences in Stage II vapor recovery systems and the manner in which the vapors are collected, the nozzles vary from vapor balance nozzles that require a tight seal at the fillpipe interface to the "bellowless" nozzle, which differs only slightly in appearance from conventional nozzles. Figures 4-6 (balance), 4-7 (assist), and 4-8 (bellowless) show various types of nozzles.

Many past problems with Stage II vapor recovery have been associated with the vapor recovery nozzle. A survey conducted in California in the late 1970's during the early period of Stage II indicated that torn nozzle bellows and faceplates, loose or missing latching lugs on balance nozzles, loose or unwound latch springs on assist nozzles, and fuel recirculation were among the most significant problems.[2] Also, a 1983 report to the California legislature listed four major consumer complaints all of

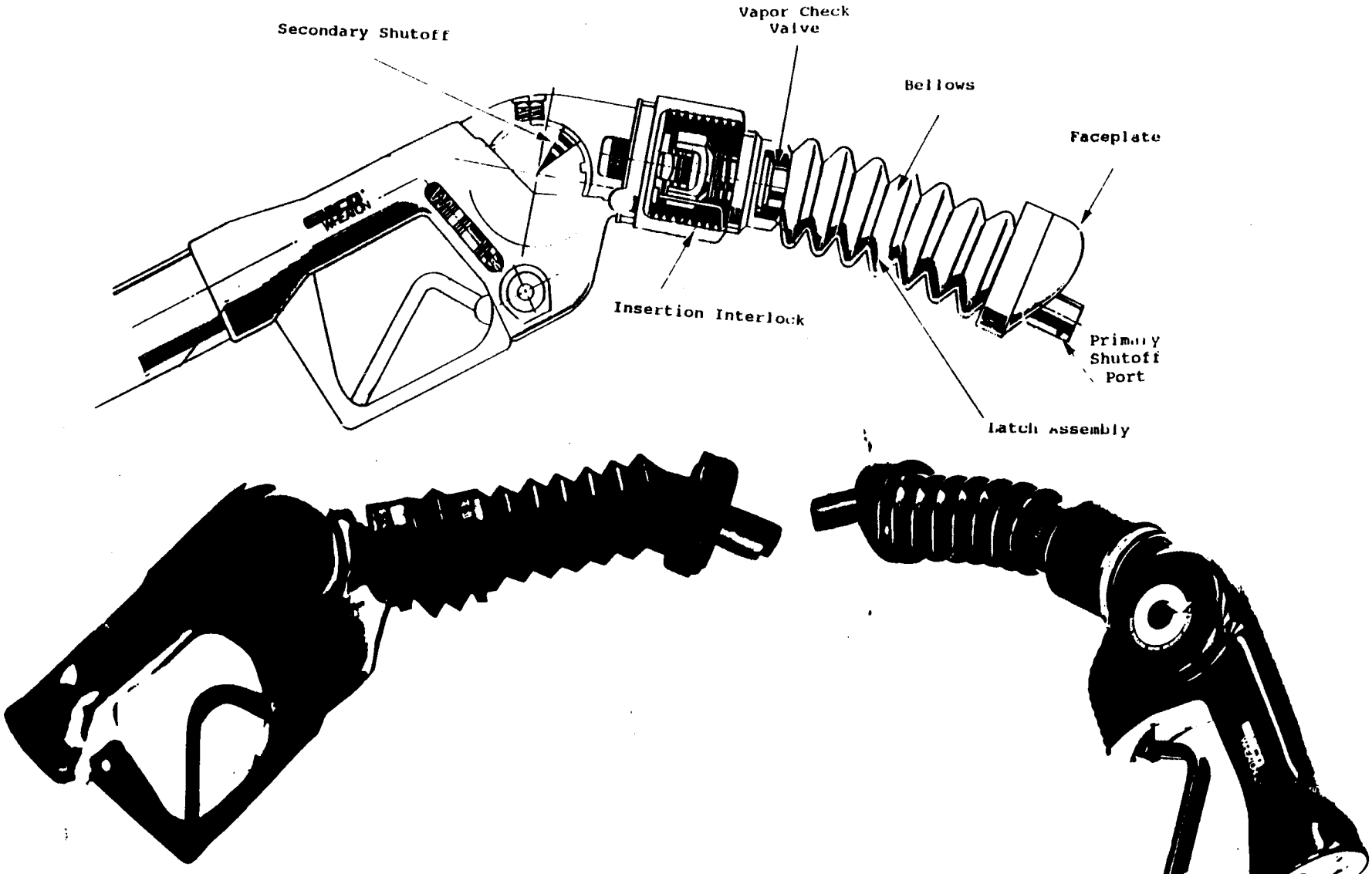

Photos Courtesy of Dover Corporation/OPW Division Cincinnati, OH and Emco Wheaton, Inc. Research Triangle Park, NC

Figure 4-6. Example Balance Nozzles

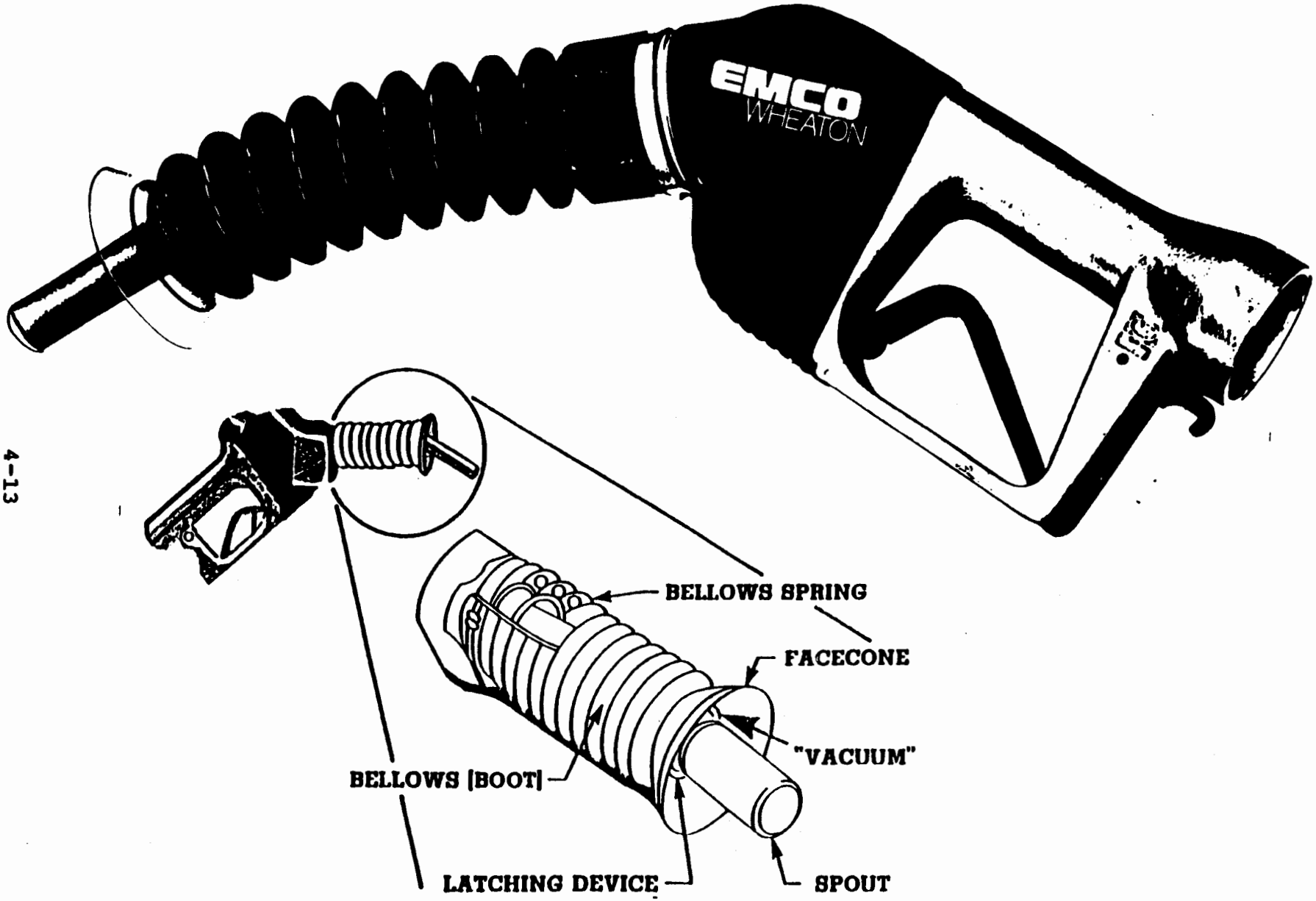

Photo Courtesy of Emco Wheaton, Inc. Research Triangle Park, NC

Figure 4-7. Example Assist Nozzle

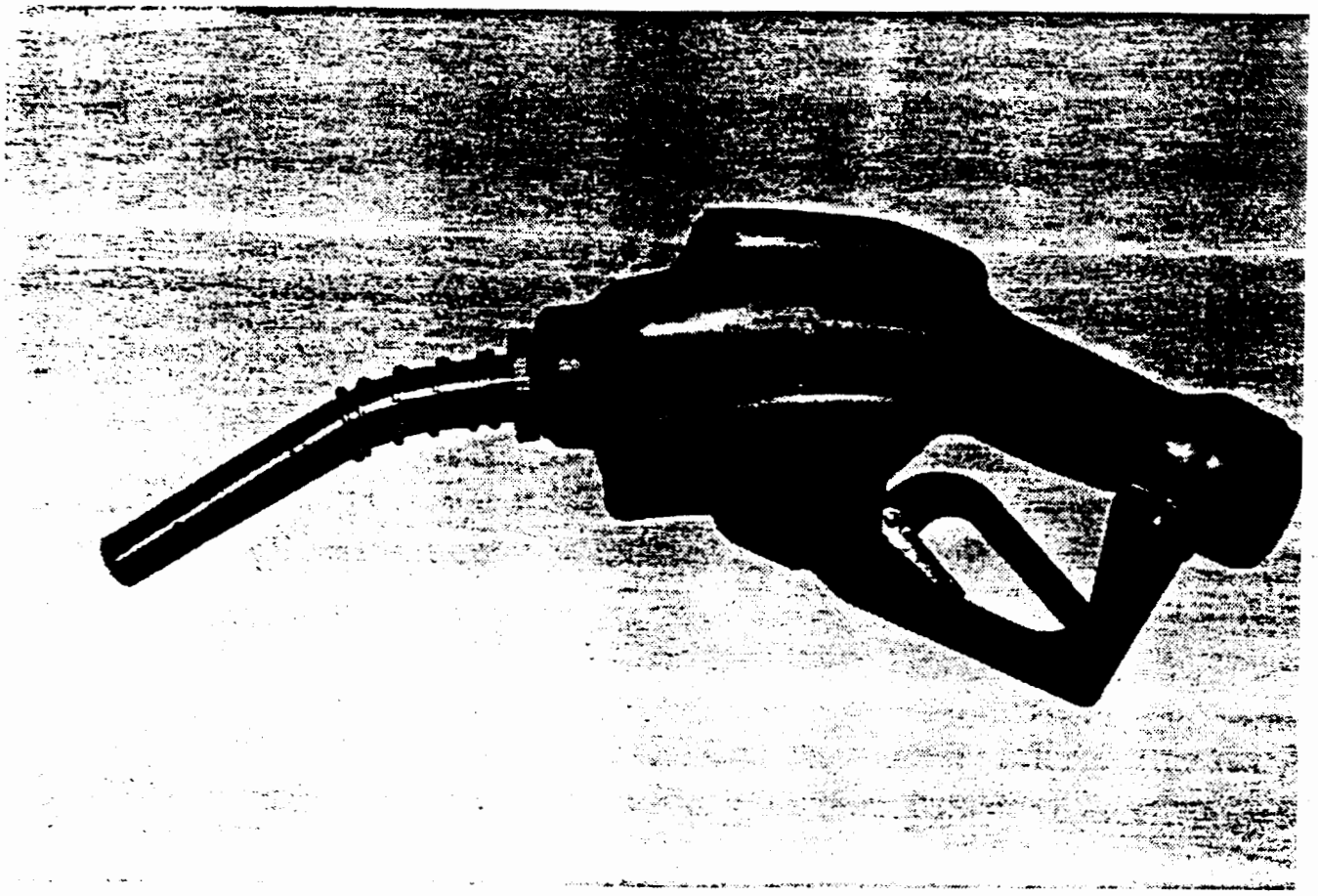

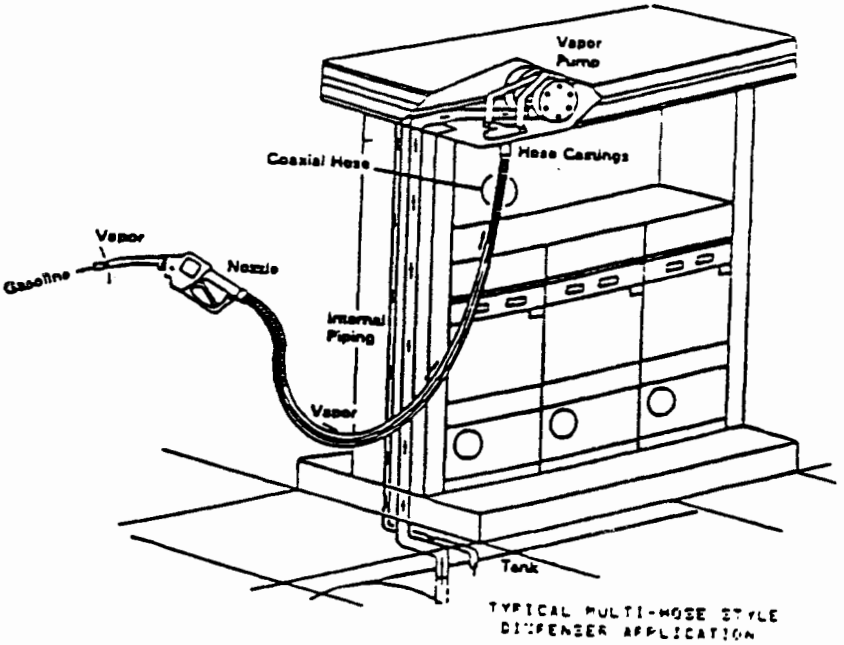

Figure 4-8. Example Bellowless Nozzle

which were nozzle related: (1) spillage of liquid gasoline during refueling, (2) equipment defects, (3) nozzle operation and handling difficulty, and (4) gasoline recirculation.[3]

Stage II equipment, especially nozzles, are far more reliable and user friendly today than in the past. New nozzles are shorter, narrower, and lighter than their predecessors. Originally weighing over six pounds, newer nozzle designs have reduced the weight by 2 to 3 pounds,[4] rendering vapor recovery nozzles only slightly heavier than conventional ones.

A major problem that occurred during the initial phase of Stage II was the compatibility of Stage II nozzles and vehicle fillpipes. There were many vehicles that had fillpipes that simply would not accept the Stage II nozzles. The State of California quickly recognized this problem and passed legislation that required the standardization of all vehicle fillpipes for 1977 and subsequent model years (California Administrative Code, Title 17, Section 2290, Chapter 7, page 267). Due to the difficulty of producing cars with different fillpipes and to provide allow motorists to fuel vehicles in all areas without difficulty, automakers responded by standardizing vehicle fillpipes for vehicles sold throughout the country.[5] Therefore, newer model cars should not have a problem using Stage II equipment, although there will probably be a very small percentage of vehicles still in use that have fillpipe configurations that will make it difficult to use Stage II.

There are several parts of the nozzle which are fundamental to the function of the nozzle and the recovery of gasoline vapors. These parts are the bellows, the primary and secondary shutoffs, the insertion interlock, the latch assembly, the hold-open latch, and the vapor check valve. Each of these units is discussed in detail in the following.

4.2.1.1 Nozzle Bellows. The nozzle bellows, or "boot", is the device that captures the displaced gasoline vapors at the vehicle fillpipe. Bellows were originally composed of rubber-like materials over a shape-retaining inner spring. The most recent generation of bellows are made from shape-holding more durable materials (see Figures 4-6 and 4-7).

For balance systems, the tight fit at the vehicle fillpipe interface is critical, so the bellows must be compressed to create this seal. The faceplate and insertion interlock (discussed later) are other components that assist in assuring a tight fit. The tension of the bellows and the difficulty of compression have been a source of consumer complaints during the history of Stage II vapor recovery. Also, the durability of bellows has been an often cited problem.

The durability of bellows material has also been significantly improved since the introduction of Stage II. This is largely responsible for an increased life expectancy of bellows for all systems and the improvements in the user-friendliness of balance systems. The high spring-tension of early balance bellows was responsible for much of the "hard-to-use" reputation of vapor recovery nozzles. The tension the bellows exerts on balance-type faceplates is substantially less now than it was years ago, and the nozzles are consequently much easier to use.

The early popularity of assist systems was in part due to the difference in the type of bellows necessary for proper system operation. Because the vapors are drawn into the bellows using a slight vacuum, a tight seal at the vehicle fillpipe interface is not necessary. In fact, the existence of a tight fit could cause removal problems and a chance of pulling a vacuum on the vehicle tank. This less stringent demand on the bellows allowed the use of lighter, more pliable bellows material for assist systems. Therefore, assist systems were attractive due to their

increased user friendliness over the early designs of balance nozzles. Improved technology has resulted in lighter and more durable assist bellows, but the gap in user friendliness has been closed by the improvements to balance systems bellows.

Despite these improvements, the importance of the bellows and the desire to avoid bellows maintenance continue to interest the industry. This is evident in the excitement and anticipation created by the bellowless nozzle (see Figure 4-7). While the bellows improvements have lessened many problems, the bellowless nozzle, in theory, will eliminate the maintenance associated with nozzle bellows. However, this bellowless nozzle has not been installed on a wide scale basis at this point.

Part of the reason that this system is not currently more prevalent is due to the fact that the system design was developed by Amoco Oil company, and Amoco does not market their gasoline products in California. Therefore, the incentive to develop and fully market this product in the past has not been great. However, due to the onset of Stage II regulations in other areas marketed by Amoco, these systems have been installed at approximately 100 stations in St. Louis, D.C., and Philadelphia, with some "experimental" sites in Maryland. There has been one bellowless nozzle system certified by CARB for limited application with certification testing for a second generation nozzle planned for the near future. It is expected that with the regulation in Dade County, the number of operating Amoco bellowless nozzle systems could double due to the numerous affiliated stations in this county. An Amoco representative indicated that the initial plans are to limit the availability of these systems to Amoco stations, although there is the possibility that market rights will be sold to other distributors in areas not marketed by Amoco (such as California).[6]

4.2.1.2 Faceplate or Facecone. Balance nozzles have a tight-fitting soft donut-type faceplate, while assist nozzles are often equipped with loose-fitting facecones. The faceplates are designed to achieve the close seal between the nozzle and vehicle fillpipe on which the balance system depends. Assist facecones are loose-fitting and often contain grooves to prevent a tight seal so that a dangerous vacuum in the vehicle tank will be avoided. The differences between balance faceplates and assist facecones are apparent in Figures 4-6 and 4-7. There are exceptions to this generic characterization. For example, one vacuum assist system was originally designed and still can be used with normal balance nozzles.

Difficulties have also been noted regarding the durability of faceplates and facecones. New materials have been developed which make these components stronger and much more durable than their predecessors.

4.2.1.3 Primary and Secondary Liquid Shutoffs. Conventional and vapor recovery nozzles have a primary overfill shutoff mechanism, sometimes called the liquid shutoff. This causes the nozzle to stop dispensing, thus preventing overfills, when a sensing mechanism in the tip of the spout (see Figure 4-6) detects that the spout tip is submerged. A small tube inside the spout provides a path for vapors from a small hole in the tip of the spout to a chamber at the base of the spout. As gasoline flows through the nozzle, vapor is sucked through this tube and fed through tiny holes in the base of the spout back into the gasoline. The suction that causes this is created by the venturi effect of gasoline flowing through the spout. As long as the flow of vapor is uninterrupted, the nozzle continues to dispense gasoline. When the tip of the spout becomes covered with liquid, however, the flow of vapors stops and a vacuum is created. This vacuum pulls a thin, rubber-like diaphragm and triggers a mechanical shutoff mechanism to stop the flow of gasoline in the nozzle. The

location of the diaphragm and the way it triggers the shutoff differ with nozzle design.

Some nozzles have a three-ball latch mechanism that causes the nozzle to shut off when the tip of the spout is in liquid. Another type of shutoff mechanism uses the vacuum to pull the diaphragm and two metal rollers away from the shaft, which activates the shutoff.

If the primary shutoff fails on a conventional nozzle the customer or attendant can easily recognize an overfill situation as gasoline rises in the fillpipe or spills on the ground. However, since vapor balance nozzles form a tight fit at the fillpipe, it is difficult to determine if the primary shutoff is malfunctioning. The nozzle may collect the liquid, thus preventing a spill but allowing liquid to collect in the vapor passage of the hose. Another common problem for vapor balance and assist systems is "topping off". Customers or attendants wish to fill the vehicle tank as full as possible so they attempt to add more gasoline once the primary shutoff has been activated. This provides the opportunity for liquid to be introduced into the vapor passage of the hose.

Because the balance system depends on a tight nozzle/fillneck connection, there is a potential for building up pressure in the vehicle tank if the vapor return becomes blocked. This was a problem with the early designed nozzles as pressure caused forcible ejection of liquid product when the nozzle was removed at the end of the fueling. To prevent this from occurring, a pressure sensing shutoff mechanism (secondary shutoff) was required. The pressure shutoff will be triggered if the primary shutoff fails and the vapor line becomes blocked with fuel.

The secondary, or high-pressure, shutoff is required to ensure that high pressure in the vehicle tank will not occur when the vapor passage is blocked. The first vapor recovery nozzles were required to shut off at about 20 inches water column. This was later changed and nozzles are now required

to shut off at or below 10 inches. The current industry standard is 6 to 10 inches water for the pressure shutoff.[7] Blockage of the vapor return path because of liquid, a kinked or flattened hose or other obstruction, can cause the nozzles to repeatedly shut off as pressure in the vehicle tank builds up.

The secondary shutoff also acts as a guard against recirculation of gasoline through the vapor passage. In the event of a failure by the primary shutoff system, the build up of liquid in the vapor passage will activate the secondary shut-off and turn off the nozzle so that no gasoline could be recirculated into the underground storage tank. California Weights and Measures conducts stringent testing of the secondary shutoff during nozzle certification.

These secondary shutoffs have also contributed to the hard-to-use reputation of balance nozzles. In most instances continued shut offs occur when problems, especially liquid blockage, exist in other parts of the system, such as the vapor hose or the underground piping. The certification process in California contains stringent tests conducted by California Weights and Measures which verify the delivery accuracy of nozzles and specifically test the primary and secondary shutoffs (see Section 4.3.3.1).

4.2.1.4 Insertion Interlock Mechanism. As noted previously, balance systems must maintain a tight fit at the nozzle/fillpipe interface while assist and hybrid systems do not. To achieve this tight fit, balance nozzles employ a soft faceplate discussed above and an interlocking mechanism. The insertion interlock, or "no seal-no flow" device ensures that gasoline cannot be dispensed unless the bellows of the balance nozzle are compressed to ensure a tight fit at the nozzle/fillpipe interface. In some balance nozzles, compression of the bellows opens a valve which permits the flow of air from the spout-tip to the primary

shutoff chamber. Attempting to dispense without compressing the bellows therefore triggers the primary shutoff mechanism. Other balance nozzles have a mechanical interlock which prevents rollers from contacting the shaft unless the bellows is compressed. The nozzle trigger is loose and "floppy" until the bellows is compressed. This is the type of interlock shown in Figure 4-6.

The difficulty in compressing the bellows so that the insertion interlock will allow gasoline flow has been another contributing factor to the complaints relating to Stage II equipment. The earlier generation nozzles required a pressure of up to twenty-four pounds to deactivate the interlock. This, combined with the weight of the nozzle and the tension of the springs in the bellows, made nozzle operation difficult for many customers. However, the improvement of each of these components has greatly reduced this problem. The pressure required to deactivate insertion interlocks has been decreased to as low as five pounds on some nozzles.[8]

A lack of understanding of the interlock and latch mechanisms can frustrate customers. This problem is one that can be corrected with public awareness programs and proper operating instructions at the pump.

4.2.1.5 Latch Assembly. The purpose of the latch assembly is to allow the customer or operator to lock the nozzle into the vehicle fillpipe by hooking the latch on the lip of the fillpipe. The latch assembly may be a spring wound around the spout, a ring around the spout (see Figure 4-7) or a bar riveted or screwed onto the spout (see Figure 4-6). This device is more critical to balance-type nozzles because of the interlock and the greater tension exerted by the bellows. Therefore, it is required on balance nozzles and is optional for conventional nozzles and some assist nozzles.

This simple device created problems specified in the earlier surveys. The difficulties were mainly due to the

latch assembly coming off the spout. Design and manufacturing improvements have been made and complaints in this area are now practically nonexistent.

4.2.1.6 Hold-Open Latch. This latch allows the nozzle trigger to be "locked" in operating position, freeing the operator to move away from the nozzle. Some establishments elect to remove hold open latches for business reasons. They prefer to keep customers at the nozzle so that they will not leave vehicles unattended or drive off with the nozzle still in the car. Hold open latches are not critical to the actual recovery of vapors and nozzles are allowed with and without them. The decision whether hold open latches may be used is often decided by local fire marshals.

4.2.2 Vapor Check Valve

The vapor check valve opens and closes the vapor passage between the underground tank and the atmosphere (through the nozzle bellows). This valve closes when the nozzle is not in use to prevent vapors from escaping. This also prevents air leakage into the Stage II system and vapor leakage out of it during vehicle refueling at another nozzle or tank truck unloading. With the exception of a few nozzles which have remotely-located flow-activated vapor check valves, balance nozzles generally have vapor check valves located in the nozzle at the base of the bellows which are opened by compression of the bellows. Most assist systems have vapor check valves located in the vapor passage but not in the nozzle. For example, one assist system nozzle has a ball-check valve (a very simple mechanism involving a larger ball-bearing which blocks the vapor passage when the nozzle spout points upward). Another has a flow-control valve in the dispenser. Another system employs a regulating diaphragm inside the nozzle designed to open or close the vapor passage as necessary to minimize the pressure difference inside and outside the nozzle.

4.2.4 Hoses and Hose Configuration Systems

4.2.4.1 **Hoses**. Vapor recovery hoses may be coaxial or dual hose. Coaxial hoses contain two passages, configured as a hose within a hose. One of the passages dispenses liquid gasoline. The other passage, the vapor hose, receives the gasoline vapors and carries them back through the underground piping to the underground storage tank. Most coaxial systems employ a 1/2 or 5/8 inch product hose inside 1-¼ to 1-½ inch vapor hose. The single exception is The Healy system which has the vapor hose inside the product hose. Dual hose systems have separate hoses for the liquid and vapor. Since 1986, all new or modified balance systems installed in California must be coaxial. Other areas with recently implemented Stage II programs only allow coaxial hoses.

Historically, hoses have been a source of problems, specifically with regard to their weight, durability, and propensity to kink. Also, hoses often touched the ground which made them susceptible to damage due to vehicles running over them. Also, since Stage II was a technology originally developed in central and southern California, the durability of hoses in colder climates has been a concern.

The original two hose system was heavy and proved to be awkward (due to hose twisting, etc.) for consumers and gas pump attendants to use. To overcome this problem, manufacturers developed a more manageable coaxial hose. However, these were still hardwalled and continue to have a weight problem. A second generation of coaxial hoses was then developed that is much lighter and even more manageable. The swivels that were necessary with the dual hose systems and the hardwall coaxial hoses are not required with these newer coaxial hoses. This further reduces the weight of the hose and makes them easier to handle. Due to improvements in thermal plastic materials, new coaxial hoses will weight only about five pounds, which is comparable to the weight of conventional gasoline dispensing hoses.

Also, the durability of early model hoses under extreme winter temperatures has been questioned. Fifth generation coaxial hoses and bellows are designed to withstand temperatures as low as -60° F.[9] Stage II systems have been installed in New Jersey and New York and no significant increase in weather related defects has been observed.[10,11]

4.2.4.2 High Hang and Hose Retractor Systems. Another hardware improvement is the development of high-hang hose dispensers and hose retractor systems. A major advantage of these configurations is that they minimize hose kinks and the possibility of the hose being flattened and help to lessen the weight of the nozzle for the customer. This helps to eliminate these situations which interfere with the flow of gasoline vapors to the underground storage tank. The hose retractor configurations also are designed to allow any liquid gasoline trapped in the vapor portion of the hose to drain into the fuel tank during normal fueling. The exception to this are systems required to have liquid removal devices. Figure 4-9 shows high hang hose and hose retractor configurations.

4.2.4.3 Liquid Removal Systems. As stated above, one major reason for the advent of the hose retractor systems was to allow any gasoline trapped in the vapor passage of the hose to drain into the fuel tank. However, the structure of multiproduct dispensers does not contain the loop that allows this drainage to the vehicle fuel tank. Therefore, a method for removing liquid trapped in the vapor passage of the hose was developed. Liquid removal systems are designed to evacuate trapped liquid from the vapor passages in coaxial hoses. They operate using the venturi principle. A slight vacuum is created by the fuel flowing in the interior hose that draws the liquid out of the vapor passage and into the liquid gasoline stream. The venturi device can be located at the dispenser end of the hose or the nozzle end, depending on the type. Figure 4-10 shows an example liquid removal device and illustrates its operation.

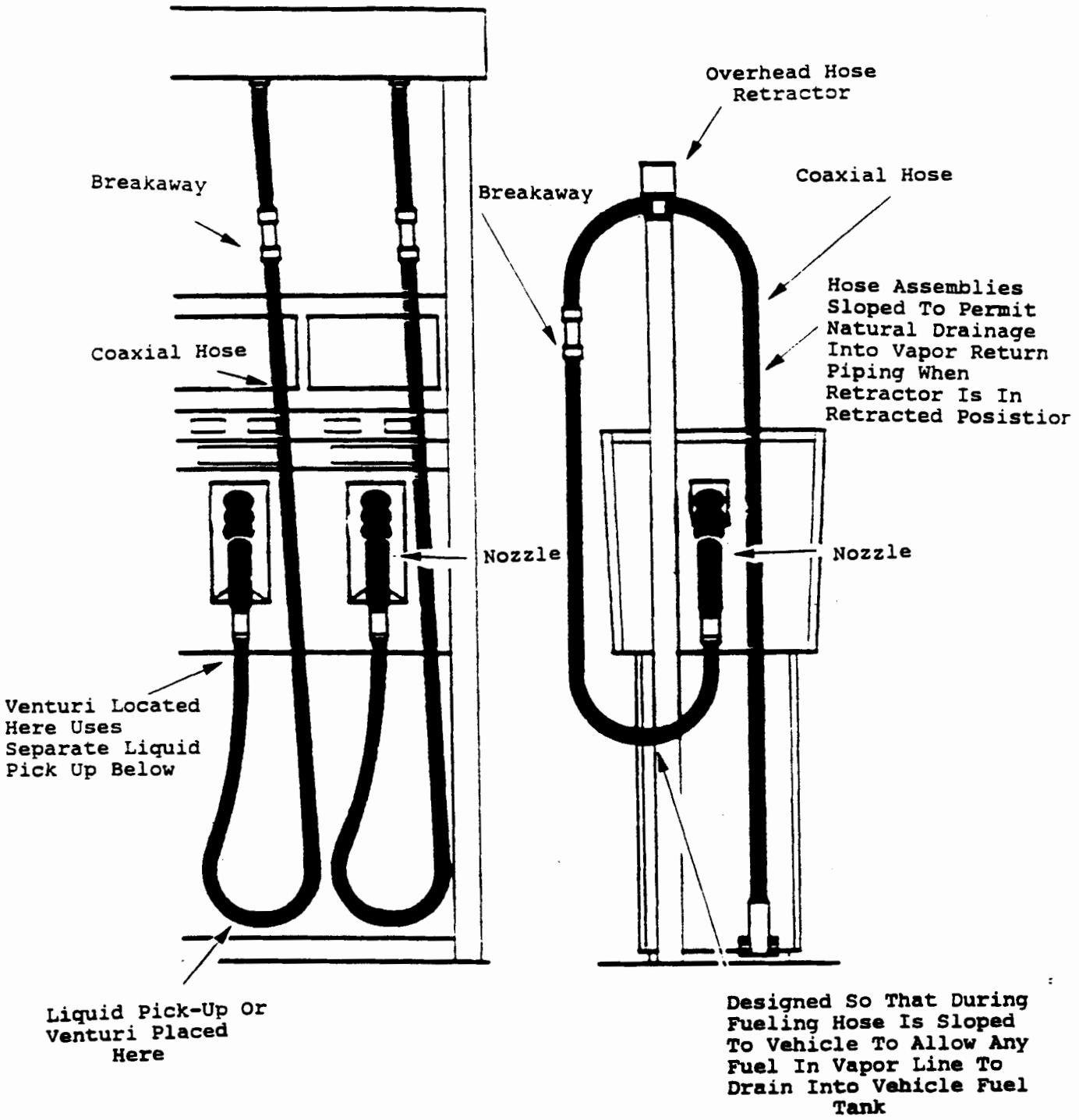

Figure 4-9. High Hang Hose Configurations

4.2.4.4 Emergency Breakaways. An addition to Stage II systems is the emergency breakaway valve. These breakaways separate and close the product hose when a customer drives off with the nozzle in the fillpipe, thereby preventing damage to the equipment and reducing the danger of fire. Figure 4-11 shows an example emergency breakaway.

4.2.5 Underground Vapor Piping

The underground vapor piping is an often ignored, but important component of Stage II systems. In fact, CARB certification includes not only the nozzles, hoses, and other above ground equipment, but the underground piping as well. Therefore, a CARB certified system must have the correct underground piping configuration as specified in the Executive Order.

The vapor piping begins with the riser pipe that is located either inside the dispenser or on the pump island. In many instances, this is a 3/4 inch galvanized riser pipe. All vapor return and vent piping should be provided with swing joints at the base of the riser to each dispenser, at each tank connection, and at the base of the vent pipe riser where it fastens to a building or other structure.

The underground vapor piping system can be made up of individual return lines or a manifolded system. In either instance, the minimum vapor pipe diameter is commonly 2 or 3 inches. The underground piping was originally all made of steel, but fiberglass vapor piping has now become popular.

The individual return line system shown in Figure 4-12 is the simplest design and has one pipe for each underground storage tank. If there are multiple dispensers of a particular product or grade of gasoline, the vapor lines are tied together into one line going to the appropriate tank. Therefore, the vapors from the vehicle tank must be transferred to the same tank from which liquid gasoline is being drawn. The piping should slope towards the underground storage tank with sufficient drop so that any

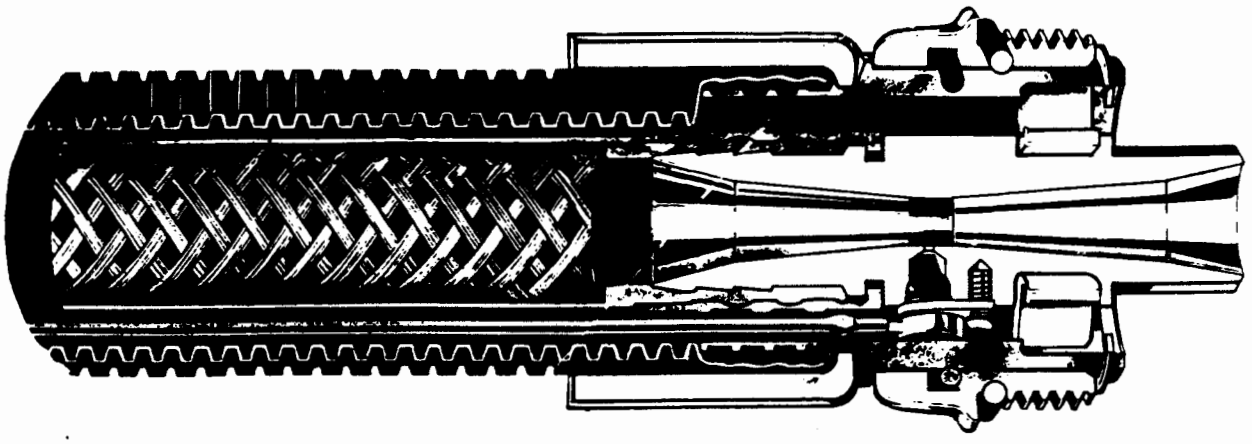

Photo Courtesy of Goodyear Tire & Rubber, Co. Akron, OH.

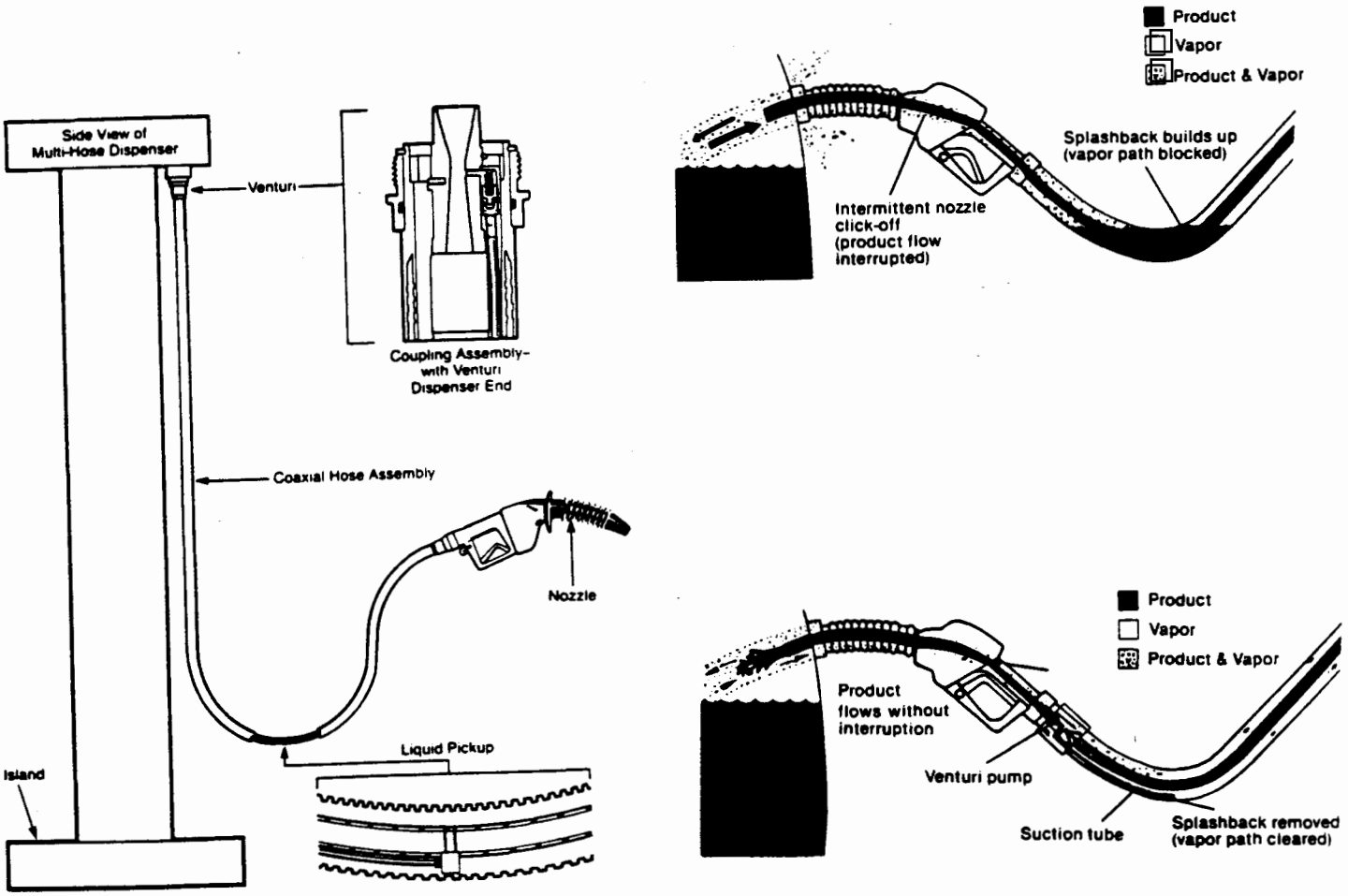

Photo Courtesy of Thermoid/HBD Industries, Inc. Bellefontaine, OH.

Figure 4-10 Example Liquid Removal Device

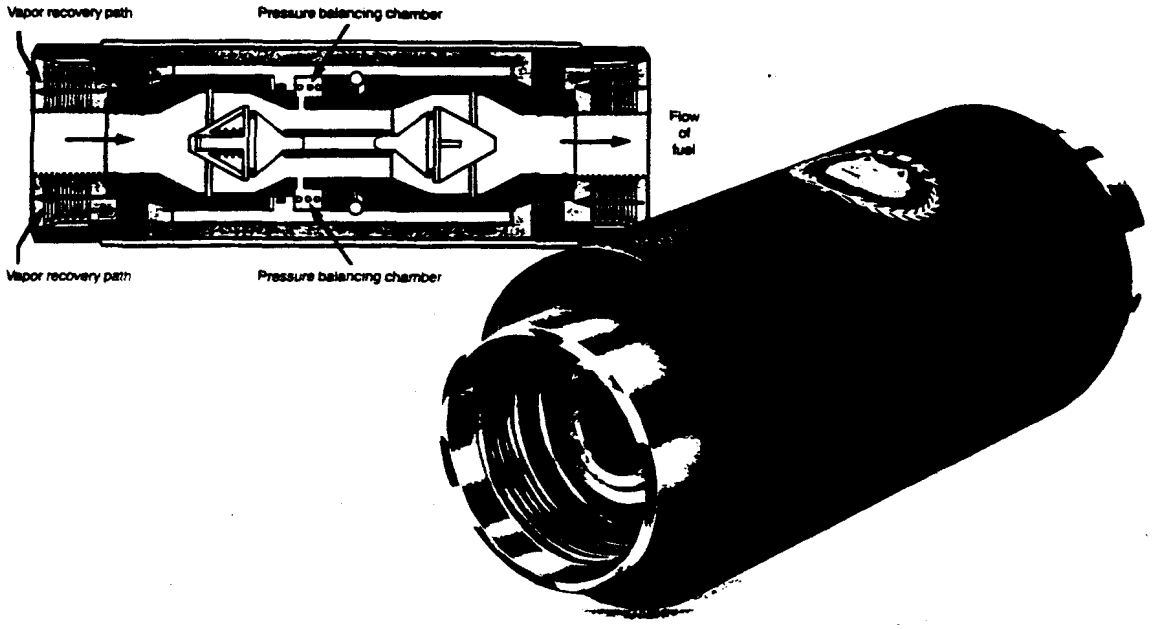

Photo Courtesy of Husky Corporation Pacific, MO

Figure 4-11. Example Emergency Breakaway

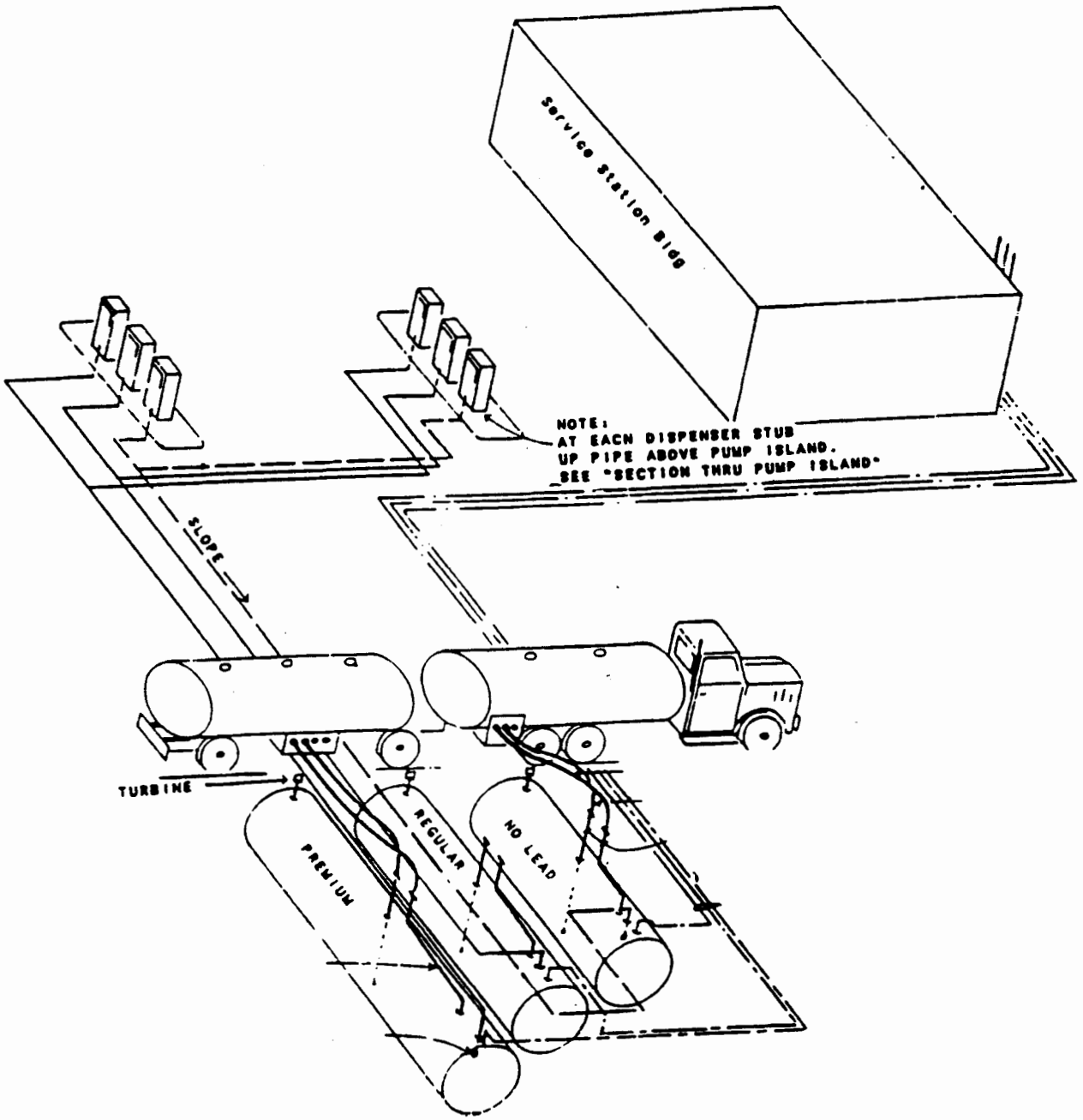

Figure 4-12. Individual Vapor Balance System Underground Piping

condensate or liquid in the vapor piping will drain to the underground storage tank. Each tank also has a vent line that is usually required to be at least 2 inches in diameter. Therefore, there would be multiple vent lines equal to the number of underground storage tanks. The vent lines should also slope toward the tanks so that any condensate will drain back into the tank.

In a manifold system, shown in Figure 4-13, all of the vapor lines from the dispensers are linked to a common manifold. This manifold can be run into a manifold box with vapor connections to all of the tanks. More commonly, the manifold is connected directly to the storage tank with leaded gasoline, or the lowest grade of unleaded (in the absence of leaded). This is to avoid contamination of the higher grade gasolines. Again, the manifold must be sloped adequately to allow any liquid present in the pipe to drain to the liquid trap or storage tank. During vehicle fueling, the vapors are returned to the appropriate tank due to the slight vacuum created in the tank by the removal of the liquid. As in the individual vapor return system, each underground tank typically has a vent pipe.

The minimum height of the vent pipe off the ground is usually determined by the Fire Marshal. A typical minimum height is 12 feet above the adjacent ground level and should vent upward or horizontally. Some areas allow pressure vacuum vents on service station vent pipes. Pressure Vacuum vents are required for some assist systems.

Problems can occur with the underground piping that decrease the efficiency of the vapor recovery to very low levels. These problems can take many forms from incorrect piping size, to improper plumbing configurations where some tanks are not even connected to the vapor piping system. The most common problem associated with the underground piping is the presence of low points in the line which allow the build-up of liquid gasoline. Low points often occur due

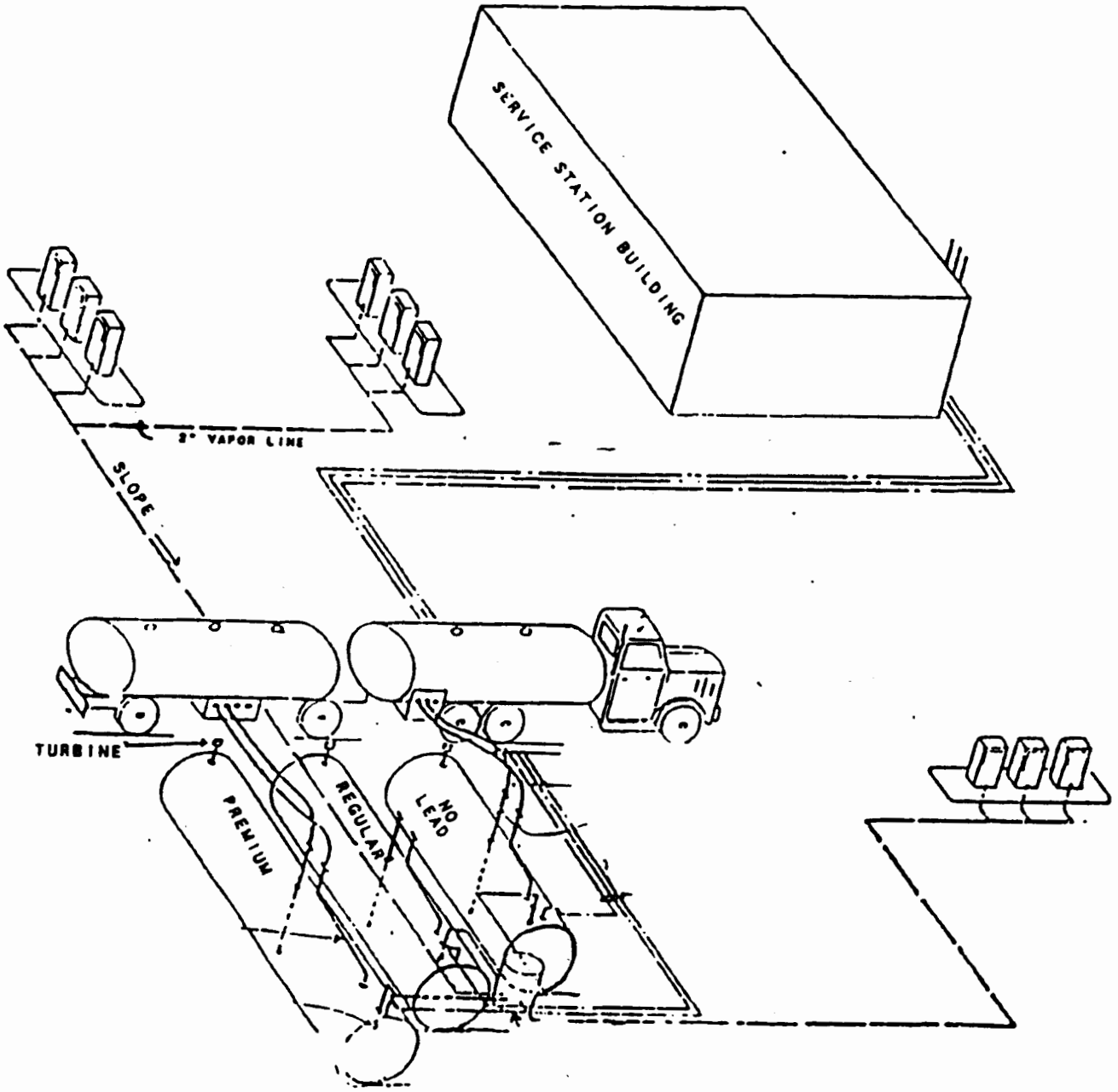

Figure 4-13. Manifolded Balance System Underground Piping

to inadequate backfilling of the piping or from running over the piping by construction equipment prior to paving or surfacing. Liquid blockage causes pressure build up which either forces the vapors out at the nozzle/fillpipe interface or causes the secondary shutoff mechanism to stop the pumping of gasoline.

Many people with a great deal of experience with Stage II systems believe that single most important element to a Stage II program is to ensure that the systems are initially installed correctly. Systems plumbed incorrectly reduce the emission reduction potential of Stage II vapor recovery substantially. Representatives in the San Diego Air Pollution Control District of California estimate that the underground piping at over 50 percent of the stations will be installed improperly without an installation testing program (these tests are discussed in Chapter 6 and contained in Appendix I) and inspections to identify improper systems.[12]

4.2.6 Aboveground storage tanks

With the problems associated with leaking underground storage tanks and the resulting stringent UST and LUST regulations, the interest in placing service station gasoline storage tanks above ground is gaining attention. In California there are a small number of service stations that have Stage II systems on above ground storage tanks.[13] For the most part, these are private card lock stations serving fleets and small vaulted, tanks. Balance systems have generally been installed for small tanks and vacuum assist systems have been installed at these stations with large bulk plant type tanks. The certification of above-ground Stage II systems in California is discussed in Section 4.3.5.

4.3 CALIFORNIA CERTIFICATION PROGRAM

It is widely recognized and accepted that Stage II technology originated in California and has developed largely due to the regulations and requirements of the CARB and local California air pollution agencies such as the Bay Area Air Pollution Management District in San Francisco (Bay Area), the South Coast Air Pollution Management District in the Los Angeles area (South Coast), and the San Diego Air Pollution Control District (San Diego). Many States and local agencies in other parts of the country rely on California for Stage II guidance due to their experience and expertise.

California State law requires that the State Air Resources Board adopt procedures for determining the compliance of any system designed for the control of gasoline vapor emissions during gasoline marketing operations.[14] In response to this legislative mandate, CARB developed procedures and test methods which describe the requirements for certification for all gasoline marketing emission sources. Appendix C.1 contains the requirements for certification.

Because it is not practical to test the efficiency of the vapor recovery system in each service station, CARB developed a "generic" equipment certification approach. In this program a prototype Stage II vapor system is evaluated and specifications developed. Systems that meet these "certified" specifications may be installed without individual efficiency tests.

CARB will accept applications for certification of vapor recovery systems from any manufacturer, but there are conditions which must be met by the manufacturer before certification testing is initiated.[15] The manufacturer is required to demonstrate the ability to pay the costs of testing prior to the commencement of CARB certification testing. This demonstration may take the form of posting a bond of not less than $20,000. In order to protect the purchaser, CARB is also required to evaluate the adequacy of

the planned methods of distribution and replacement parts program, the financial responsibility of the applicant, and other factors affecting the economic interests of the eventual system purchaser. The manufacturer must also provide a three-year warranty for the system. The only exception to the warranty requirement is for those components that the maintenance manual identifies as having expected useful lives of less than three years, such as vapor recovery nozzles. The warranty in these cases is allowed to specify the expected life of the component.

Specifically, it is required that the application be in writing, signed by an authorized representative of the manufacturer, and include the following information:

1. A detailed description of the configuration of the vapor recovery system which includes the underground piping configuration and specifications, the gasoline dispensing nozzle to be used, engineering parameters for pumps and vapor processing units, and allowable pressure drops through the system.

2. Evidence demonstrating the vapor recovery reliability of the system or device for 90 days. The procedures by which this is determined are discussed below in section 4.3.1.

3. A description of tests performed to determine compliance with the general standards and the results.

4. A statement of recommended maintenance procedures, equipment performance checkout procedures, and equipment necessary to assure that the vapor recovery system, in operation, conforms to the regulations, plus a description of the program for training personnel for such maintenance, and the proposed replacement parts program.

5. Six copies of the service and operating manuals that will be supplied to the purchaser.

6. A statement that a vapor recovery system, installed at an operating facility, will be available for certification testing no later than one month after submission of the application for certification. The certification testing procedure is discussed in detail in Section 4.3.2.

7. The retail price of the system and an estimate of the installation and yearly maintenance costs.

8. A copy of the warranty or warranties provided with the system.

9. If the application is for a system previously tested, but not certified, the application must include identification of the system components which have been changed, and any new test results obtained by the applicant.

10. Any other information reasonably required by CARB.

While this list shows many requirements for certification, the major portions of CARB requirements are the operational/durability, or "90 day" test, and the certification or "100 car" test.

4.3.1 Operational/Durability Test, "90 Day Test"

As stated above and contained in Appendix C.1, the applicant must demonstrate the reliability of the system. This demonstration is conducted by installing a system at an operating station and observing the durability for at least 90 days.[16] The facility utilized for certification testing must have a minimum throughput of 100,000 gallons per month and include at least six nozzles of each type submitted for approval. No more than two types of nozzles can be present at any one test facility. During this "operational" test, replacement of components or alteration of the control system is not allowed, except replacement or modification of a component if it has been damaged due to an accident or vandalism. No maintenance or adjustments to the system are allowed during the test unless specifically called for in the system's maintenance manual. The entire system is sealed so that unauthorized maintenance or adjustment may be detected. If detected, this can be reason for immediate failure of the test. CARB observes the station frequently during the testing period and evaluates the durability of the system or components after this period.

4.3.2 Certification Testing, "100 Car Test"

After meeting all other CARB requirements and successful completion of the 90 day test, the efficiency of the system is tested[17] during at least 100 vehicle fuelings. The test method is contained in Appendix C.2. The test procedures provide for the fueling to occur during the normal operation of the service station, but all CARB efficiency testing is conducted in a self-service mode. Before the 100 vehicle efficiency test can be conducted, the entire vapor recovery system must be tested for leaks.

Each vehicle tank that is refueled is tested to identify those which are leak tight. Vehicles that pass the leak tight test may be included in the baseline population if other measurements indicate that no vapors were lost during the fueling operation.

Vehicle fuelings are observed until matrix requirements are satisfied and at least forty baseline vehicles have been identified. This matrix identifies vehicles by manufacturer and year and ensures that the vehicles used during the test are representative of the on-the-road vehicle population in terms of vehicle miles travelled.

The test procedures for determining the efficiency of systems to control gasoline vapors displaced during vehicle fueling require that the weight of vapors collected at the vehicle, corrected for vent losses, be compared to the potential mass emission calculated for that vehicle. A standard test sample of the vehicle population is tested and an average efficiency calculated.

The potential mass emissions are determined during the fueling of vehicles by measuring the mass of hydrocarbons collected from vehicles from which no leak occurred (baseline vehicles). Potential emissions are expressed as a function of the vapor pressures of the dispensed fuel and the temperature of the gasoline in the test vehicle tank. The relationship is used as the baseline or reference from

which the efficiency of a vehicle fueling vapor control system is evaluated.

During these fuelings, spillage and spitback from the system are also evaluated. Spillage is defined as "a loss of more than one milliliter of liquid gasoline from the gasoline nozzle as a result of preparing to fuel a vehicle or at the end of a fueling operation in returning the nozzle to the dispenser" and spitback defined as "a loss of more than one milliliter of liquid gasoline during the dispensing of gasoline." In order to pass this portion of the test, no more than ten spitbacks or twenty instances of spillage per 100 vehicle fuelings can occur during the testing.

4.3.3 Approval of Other Agencies

The approval of three other State agencies is also required as a precondition to CARB certification. State law provides that the State Fire Marshal determine whether any component of system creates a fire hazard.[18] The Department of Food and Agriculture, Division of Measurement Standards, is given sole responsibility for the measurement accuracy aspects, including gasoline recirculation, of any component or system. Finally, the Division of Occupational Safety and Health is designated the agency responsible for determining whether any gasoline vapor control system or component creates a safety hazard other than a fire hazard.[19] Appendix C also contains regulations, requirements, and test procedures for these other agencies.

4.3.3.1 California Measurement Standards Division. Prior to Air Resources Board certification, the system must be submitted for type approval to the California Department of Food and Agriculture, Division of Measurement Standards and certified by this division (see Appendix C.3).

The California Department of Food and Agriculture, Division of Measurement Standards, issue certificates of approval based on California Administrative Code Article 2, Procedures for Type Approval Certification Evaluation and Field Compliance Testing of Vapor Recovery Systems. This

code establishes regulations to govern some design characteristics of Stage II vapor recovery systems and their operation to ensure liquid recirculation is prevented.

There are several steps involved in order for certification. It is the responsibility of the manufacturer to request an application for the National Type Evaluation Program (NTEP). Information regarding the design of the system, including schematics, blueprints, instruction manuals, brochures, and all other pertinent facts are sent to the Director of the Measurement Division for a preliminary review.

Once the Director reviews the preliminary application and approves, the applicant is authorized to install the system in a prescribed location for use in the type approval certification testing.

The Director, in conjunction with the County Sealer of Weight and Measures for the designated location observe and examine the system in operation normally within 30 to 90 days. During that time, one or more inspections will be conducted which specifically relate the system components, their performance, and their accuracy.

There are system installation specifications. There must be a minimum of six nozzles installed on hoses of both leaded and unleaded fuels, each tested a minimum of three times during an examination. Prior to the field examination, the dispenser meters for the test nozzles are tested and adjusted accordingly.

Field compliance tests are conducted to examine: (1) the proper operation of primary shut-off and secondary shut-off devices, (2) the delivery accuracy of the system, and (3) the performance accuracy of assist system evaporation and volume change.

The test procedure for primary shut-off devices involves filling the test unit with fuel dispensed from the nozzle until the test unit becomes full. This should activate the primary shut-off device. Ten consecutive

override attempts are made which should result in automatic nozzle shut-off before the dispenser volume indicator increases more than 1/10 gallon limit. The 10 override attempts are performed a minimum of three times for each nozzle.

The secondary shut-off device is tested by introducing sufficient fuel into the vapor return line to block the return of vapors through the line. The nozzle and hose is then held in a configuration so the liquid is concentrated in the vapor section of the hose. Ten attempts are made to dispense fuel into an empty test unit. The volume shown on the dispenser indicator is recorded before and after each attempt. The nozzle must shut off automatically before the dispenser volume indicator increases more than 3/10 gallon for each attempt. This procedure must be performed on a minimum of 6 nozzles.

Compliance with delivery accuracy requirements is based upon data recorded for at least 150 vehicles (formerly 300 vehicles) while observing customers fueling with the test nozzles under normal field conditions. The 150 or more vehicles should be representative of California vehicles.

The assist system evaporation and volume change performance accuracy test is conducted because excessive vacuum may result in artificial evaporation of customer fuel. This would decrease the measured volume and also cause possible implosion of vehicle fuel tanks.

In addition to all of these tests which are conducted by Measurement Division personnel, type approval certification is not issued until the applicant submits a report of evaluation by an independent, pre-approved testing laboratory. It is after review of all of the test data and other information that the Division grants certification of a vapor recovery system.

4.3.3.2 California Fire Marshal. Prior to Air Resources Board certification of the vapor recovery system, plans and specifications for the system must be submitted to

the State Fire Marshal's Office for review to determine whether the system creates a hazardous condition or is contrary to adopted fire safety regulations (see Appendix C.4). Final determination by the State Fire Marshal may be contingent upon a review of each pilot installation of the proposed system. The California Fire Marshall has regulations, whose purpose is to establish minimum standards of fire safety for vapor recovery systems or components.

Any manufacturer desiring certification and listing of a gasoline vapor recovery system or component must submit a completed application for evaluation and certification to the State Fire Marshall. This form must be accompanied by the proper fee. In addition, a test evaluation from a pre-approved testing organization, as well as technical data and black-line drawings suitable for reproduction must also be submitted.

The final report should include failure analysis engineering data, writing diagrams, operating and maintenance manuals and photographs, together with a description of the tests performed and the results. The catalog number, the laboratory test report number, and date should also be included.

After review and approval of the material, the Fire Marshal issues a certification of the Stage II system. Each vapor recovery system or component which is certified by the California Fire Marshall must bear a label placed in a conspicuous location and must be attached by the manufacturer during production or fabrication.

4.3.3.3 California OSHA. Prior to certification of the system, the manufacturer of the system must submit the system to the California Occupational Safety and Health Administration (Cal OSHA) for determining compliance with appropriate safety regulations (see Appendix C.5). The Division of Occupational Safety and Health of the Department of Industrial Relations is the only agency responsible for

determining whether a gasoline vapor control system or component creates a safety hazard other than a fire hazard.

The General Industry Safety Orders (GISO) is the guideline used in helping to make a determination. Each section of the GISO relates to a different part of the service station, ranging from the location of the storage tanks to the safe operation of electrical equipment. All electrical equipment and wiring must be installed in accordance with the provisions of the California Electrical Safety Orders. All electrical equipment integral with the dispensing hose or nozzle must be suitable for use in the proper locations.

They do not necessarily run tests, but assure that the GISO guidelines and requirements and are met. The equipment is tested by an outside lab which submits a report to California OSHA.

The final determination is made when all of the requirements have been met. A letter is sent to CARB stating that the system in question has satisfied the requirements of California OSHA.

4.3.4 Cost of Phase II Certification

The certification of equipment is not an inexpensive venture for equipment manufacturers. There are application fees, government charges for testing, private laboratory testing costs, as well as the manpower costs involved with the oversight of the certification process. A fee not to exceed the actual cost of certification is charged by the Air Resources Board to each applicant who submits a system for certification. A conservative estimate of the fees charged by CARB is placed at around $5,000,[20] excluding the $20,000 bond discussed earlier. The contractor fee to conduct the 100 car certification efficiency test has been estimated at about $20,000.[21] This puts the cost for only the CARB portion of certification at approximately $25,000.

California State law allows the State Fire Marshal, the Division of Measurement Standards, and the Division of

Industrial Safety to charge reasonable fees for certification of gasoline vapor systems not to exceed their respective estimated costs. Payment of the fee is a condition of certification. Representatives of major equipment manufacturers estimate that the total cost for obtaining CARB certification can range from $50,000 - $100,000.[22,23]

4.3.5 Certification of Aboveground storage tank systems

Stage II systems have also been installed at gasoline dispensing facilities with aboveground storage tanks. CARB has certified several balance systems for small aboveground vaulted tanks, as well as a Hirt assist system for similar tanks. There are also Hirt and Hasstech assist systems installed at bulk plant type card lock facilities, but no certifications have been issued at this time. CARB officials indicate that the certification of such systems on a generic basis is expected in the future.[24]

Since most of these applications in California are at private facilities, the conditions of the 100 car matrix could never be met. Therefore, the certifications are based on a combination of emissions monitoring, equipment testing, and engineering analysis. Appendix D also contains examples of executive orders for the small vaulted aboveground tanks.

4.3.6 Executive Orders

If the Executive Officer of CARB determines that a vapor recovery system conforms to all requirements, an order of certification, or Executive Order is issued. The Order specifies the conditions which must be met by any system installed under the certification. These specifications may include the plumbing system, an equipment list, the vapor hose configuration, and the maximum allowable pressure drop through the system.

The interpretation of CARB executive orders can be both confusing and frustrating. This is in part due to the fact that many system updates and subsequent recertification of the equipment occur. It is also due to the large number of

components and manufacturers of these components. The understanding of exactly what is "CARB certified" is not an easy task, and areas with vapor recovery regulations which rely on CARB certification should take the necessary time to study and understand the Executive Orders. More discussion on the determination of "approved systems" is given in Chapter 6. Table 4-1 presents a list of current Stage II CARB certifications and executive orders.

Appendix D contains a list of all Stage II CARB executive orders issued since the initiation of the program. This differs from Table 4-1 because some orders have been updated, rescinded, etc.. Also included in the appendix are summaries of the requirements for the most recent generation of equipment. And finally, the appendix contains actual executive orders. The executive orders provided include G-70-52-AL that gives a summary of all above ground equipment for Red Jacket, Hirt, and Balance systems; G-70-70-AB that addresses the Healy aspirator assist system; G-70-7-AB that addresses the Hasstech vacuum assist system; G-70-118 that addresses the Amoco bellowless nozzle system; G-70-36-AC and G-70-17-AB that have detailed descriptions of underground piping requirements; and G-70-132 and G-70-133 that address above ground tank systems.

If after certification of a system the manufacturer wishes to modify the system, the proposed modifications must be submitted again for approval. Such modifications may include substitution of components, elimination of components and modification of the system configuration and may not require the full scale testing effort. If after certification of a system, CARB finds the system to no longer meet the specified certification specifications, they may revoke or modify the prior certification.

4.3.7 Effectiveness of Systems

The test method for certifying Stage II systems states that such a system "shall prevent emission to the atmosphere of at least 90 percent or that percentage by weight of the

TABLE 4-1. SUMMARY OF CARB EXECUTIVE ORDERS CERTIFYING SYSTEMS TO BE AT LEAST 95 PERCENT EFFICIENT

Executive Order Title	CARB Number
Certification of the Hasstech Model VCP-2 and VCP-2A Phase II Vapor Recovery Systems	G-707-AB
Relating to Modification of Certification of the Emco Wheaton Balance Phase II Vapor Recovery System	G-70-17-AB
Recertification of the Exxon Balance Phase II Vapor Recovery System	G-70-23-AB
Recertification of the Atlantic Richfield Balance Phase II Vapor Recovery System	G-70-25-AA
Certification of the Modified Hirt VCS-200 Vacuum Assist Phase II Vapor Recovery System	G-70-33-AB
Relating to Modification of Certification of the OPW Balance Phase II Vapor Recovery	G-70-36-AC
Recertification of the Texaco Balance Phase II Vapor Recovery System	G-70-38-AB
Recertification of the Mobile Oil Balance Phase I Vapor Recovery System	G-70-48-AA
Recertification of the Union Balance Phase II Vapor Recovery System	G-70-49-AA
Certification of components for Red Jacket, Hirt, and Balance Phase II Vapor Recovery	G-70-52-AM
Recertification of the Chevron Balance Phase II Vapor Recovery System	G-70-53-AA
Relating to the Certification of the Healy Phase II Vapor Recovery System for Service Stations	G-70-70-AB
Certification of EZ-Flo Nozzle Company Rebuilt Vapor Recovery Nozzles and Vapor Recovery Nozzle Components	G-70-78
Certification of EZ-Flo Nozzle Model 3006 and Model 3007 Vapor Recovery Nozzles and Use of E-Z Flo Components with OPW Models 11VC and 11VE Vapor Recovery Nozzles	G-70-101-B

TABLE 4-1 (CONTINUED). SUMMARY OF CARB EXECUTIVE ORDERS CERTIFYING SYSTEMS TO BE AT LEAST 95 PERCENT EFFICIENT

Executive Order Title	CARB Number
Certification of Rainbow Petroleum Products Model RA3003, RA3005, RA3006 and RA3007 Vapor Recovery Nozzles and Vapor Recovery Components	G-70-107
Certification of ConVault Incorporated Aboveground Tank Filling/Dispensing Vapor Recovery System	G-70-116-A
Certification of Amoco V-1 Vapor Recovery System	G-70-118
Certification of the Husky Model V Phase II Balance Vapor Recovery Nozzles	G-70-125
Certification of the OPW Model 111-V Phase II Balance Vapor Recovery Nozzle	G-70-127
Certification of the Bryant Fuel Systems Aboveground Tank Filling/Dispensing Vapor Recovery System	G-70-128
Certification of the BRE Products, Inc. Enviro-Vault Aboveground Tank Filling/Dispensing Vapor Recovery System	G-70-129
Certification of Sannipoli Corporation Petro Vault Aboveground Tank Filling/Dispensing Vapor Recovery System	G-70-130
Certification of Hallmark Industries Tank Vault Aboveground Tank Filling/Dispensing Vapor Recovery System	G-70-131
Certification of Trusco Tank, Inc. Supervault Aboveground Storage Tank Filling/ Dispensing Vapor Recovery System	G-70-132
Certification of LRS, Inc. Fuelmaster Aboveground Storage Tank Filling/Dispensing Vapor Recovery System	G-70-133
Certification of the EZ-Flo Rebuilt A4000-Series and 11V-Series Vapor Recovery Nozzles	G-70-134

Source: May 17, 1991 letter with attachments from James Morgester, CARB, to Stephen Shedd, EPA.[23]

gasoline vapors displaced during the filling of the stationary storage tank as required by applicable air pollution control district rules and regulations."[26] Although this provides an efficiency of 90 percent, all of the air pollution districts in California contain regulations which require Stage II systems which achieve 95 percent efficiency.[27] Therefore, CARB certifies systems as 95 percent efficient. In other words, a CARB certified system has been tested and can be expected to achieved 95 percent or greater effectiveness in the removal of VOCs. The systems shown in Table 4-1 have all been documented to achieve 95 percent efficiency or better.

4.4 IN-USE EFFECTIVENESS

As stated previously, all Stage II systems certified in California have been shown to operate with at least 95 percent removal efficiency. This efficiency is established during the 100-car test segment of the certification procedures. This 95 percent emission reduction is the minimum required by districts in California and is required by other States. However, after the equipment is installed and normal operation begins, associated wear and tear, malfunctions or system problems can result in reduction of certified efficiency.

4.4.1 In-Use Efficiency

The term in-use efficiency is used to reflect the actual average operating efficiency of the system. The in-use efficiency takes into account system downtime, malfunctions, and defects that can occur relating to specific pieces of equipment. The in-use efficiency is calculated by determining the frequency of specific malfunctions and defects and assuming a specific efficiency decrease associated with each malfunction or defect.

Factors affecting the in-use efficiency of a Stage II system include:

- misinstallation of aboveground or underground equipment;
- specific nozzle defects or malfunctions;
- hoses tears, kinks, or liquid blockage;
- vacuum pump or vapor processor malfunctions; or
- generally poor maintenance.

Many defects or malfunctions to equipment are as a result of the equipment being operated by the general public. As a result, proper installation and maintenance of the equipment is a crucial factor in keeping the in-use effectiveness as close to 95 percent as possible.

Most of the discussion in this section describes the affect on efficiency of defects in aboveground equipment. Misinstallation of underground equipment can also cause significant decreases in efficiency. One person interviewed in California indicated that as much as 50 percent of the facilities could have problems in underground piping installations.[26] This emphasizes the importance of conducting the underground piping tests (liquid blockage, backpressure, and pressure decay) to determine proper installation. Chapter 6 discusses these tests in more detail. Malfunctions or defective equipment left in operation can significantly reduce the vapor capture and hence the actual vapor reduction. Studies have shown that the frequency of inspections made by enforcement personnel can affect the in-use efficiency.[29,30,31,32] More frequent inspections will identify defective equipment, require replacement of the equipment, and, as a result, improve overall in-use efficiency.

4.4.2 In-Use Efficiency Calculations

Several pieces of data are necessary to calculate in-use efficiency for a Stage II program. First is a database of system malfunction and defects. This database is necessary to establish the frequency of occurrence for specific defects. Secondly, an efficiency decrease must be

assigned to each malfunction or defect. This efficiency decrease is an estimate of system efficiency decrease that occurs with each malfunction or defect found. The overall in-use efficiency is then the product of the individual defect frequency and the efficiency decrease. The following equation is used to calculate in-use efficiency.

$$E_I = E_T\,[100-(F_1)(ED_1)][(100-(F_2)(ED_2)]---[(100-F_x)(ED_x)]$$

where:

E_I = In-use efficiency, %

E_T = Theoretical or certification efficiency, % (typically 95 percent)

F_x = Frequency of occurrence of defect x, %

ED_x = Efficiency decrease assigned to defect x, %

Table 4-2 lists common defects for vapor balance systems and the efficiency decrease associated with each defect. These efficiency reductions have been developed and used by EPA in previous in-use efficiency studies.[33,34] The efficiency decrease assumptions were in some cases obvious (i.e., no vapor recovery installed resulted in 100 percent reduction in efficiency), while in other cases based on engineering calculations (i.e., tears in nozzle boots). Appendix E of this document contains an illustrative example of how to use this data to generate an in-use efficiency estimate.

The example provided in Appendix E illustrates how State or local agencies can use a database of defects to estimate in-use efficiency. As new data becomes available, efficiency decrease estimates in Table 4-2 can be refined to better approximate efficiency reductions associated with each defect, and a detailed database of malfunctions can be obtained to estimate area specific in-use efficiencies. It should be noted that the example calculations do not include efficiency decreases due to underground piping problems. For vacuum assist systems, malfunctions associated with

TABLE 4-2. EFFICIENCY DECREASES ASSOCIATED WITH STAGE II BALANCE SYSTEM DEFECTS

Defect	Efficiency Decrease Assigned (percent)
No Vapor Recovery Equipment Installed (non-compliance)	100
- Facilities with no equipment on any nozzle	100
- Facilities with at least some vapor recovery	100
Nozzle Damage	22
Retractor Not Installed (all other V.R. equipment installed)	5
Retractor Broken	5
Boot and Face Seal, or Boot Only, Not Installed (V.R. nozzle installed)	100
Torn Boot	30
Face Seal Only Not Installed (remainder of V.R. equipment installed)	22
Torn Seal	10
Vapor Hose Not Installed	100
Torn Vapor Hose	10
No Seal-No Flow Broken	22
Insufficient Hose Drainage	100

Source: 1987 RIA, Volume I, Appendix A.

vacuum blowers and vapor processors would have to be included.

4.4.3 Results and Conclusions

The in-use efficiency of a Stage II program is directly proportional to proper installation, operation and maintenance of the control equipment. Control agencies where Stage II has been installed have asserted different levels and frequencies of compliance inspections and monitoring, and used public participation by complaint toll free numbers to assure Stage II compliance. This section of the document will focus on the end results of in-use effectiveness estimates of Stage II systems and programs.

As discussed and described in the previous section, surveys of installed equipment in areas with known levels of compliance monitoring, and assumptions on the effect of damaged or missing equipment, will allow the calculation of the effectiveness of a Stage II program in a given area. EPA has used this approach to calculate the effectiveness of Stage II in previous studies for supporting an analysis of Stage II versus onboard controls.[35,36] These studies calculated in-use efficiencies of 92 percent with semi-annual inspections, 86 percent with annual inspections and 62 percent with minimal or less frequent inspections. Figure 4-14 illustrates the relationship between inspection frequency and in-use effectiveness. The range of inspection frequencies shown on the graph is a simplification of actual inspection frequencies and in most cases actual inspection frequencies will fall between the data points.

EPA received a number of comments during the public comment periods on the estimates shown in Figure 4-14. Comments were received from auto manufacturers, control agencies, equipment manufacturers, and oil company trade associations that suggested both upward and downward adjustments to the Stage II in-use efficiency.[37]

The EPA evaluated new data in an effort to update the in-use efficiency estimates and included this as Appendix A

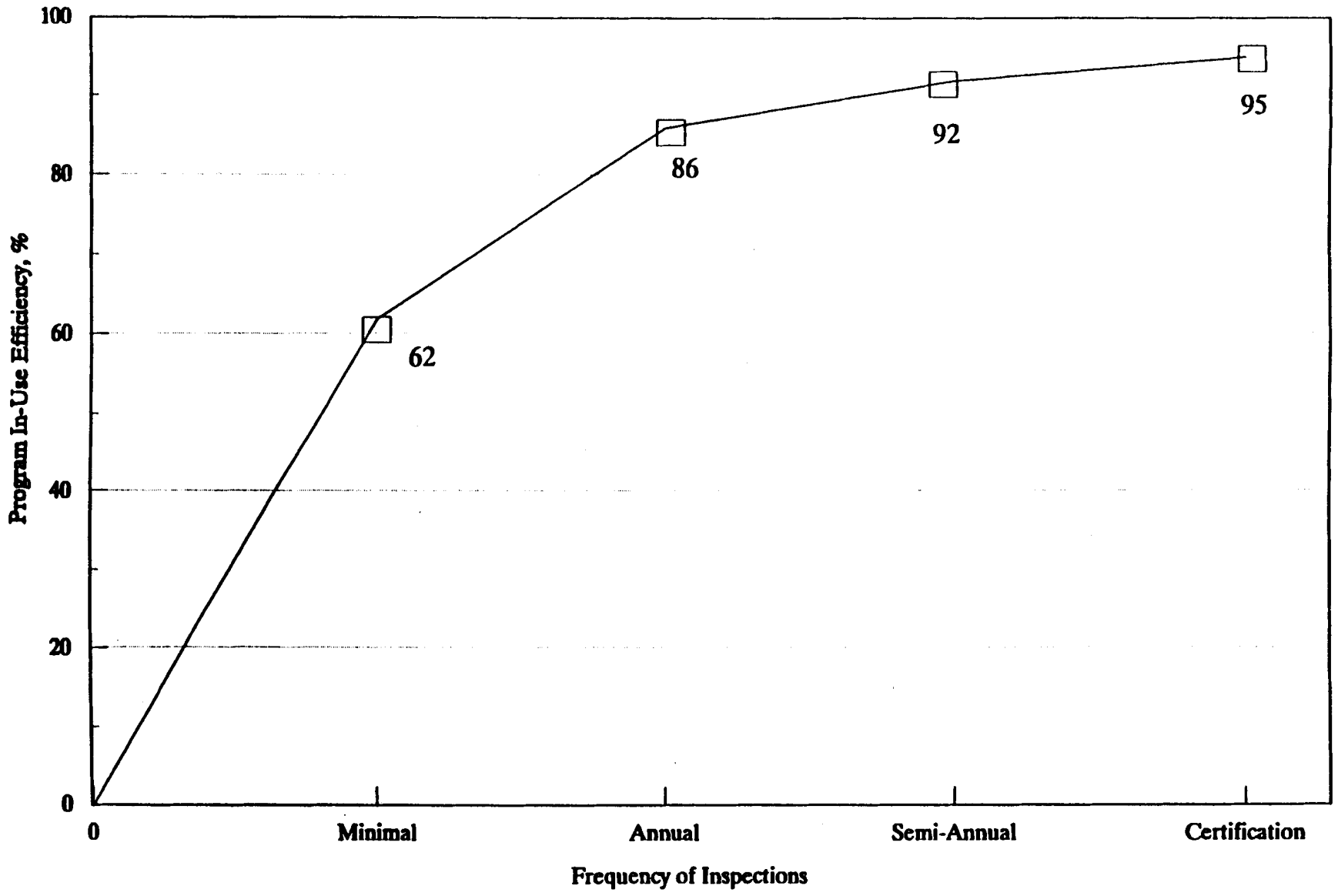

Figure 4-14. Relationship of Inspection Frequency to Program In-Use Efficiency

to the 1987 Draft RIA. As discussed previously in this chapter, EPA also examined a recent report on inspection of all Stage II service station installations in the Washington, D.C. area, and revisions were subsequently made to the estimates for the frequency and types of defects affecting Stage II systems. Using this information, the Agency's estimate for the lower end of the Stage II efficiency range was adjusted from 56 to 62 percent.

The EPA also evaluated California Air Resources Board data, which were presented in the 1983 Report to the Legislature.[38] An attempt was made to cull inspection data dealing with only the newest Stage II systems. However, the data were insufficient to differentiate between system type, so no refinement of their 80-92 in-use efficiency rate could be obtained. The analysis used the average of this range. Additional data were obtained from randomly selected service stations in the Bay Area of California, which indicated an in-use efficiency of 90 to 92 percent; however, the data were considered inadequate to update the in-use figure for the entire State of California. Therefore, the upper end of the in-use efficiency range used in the 1987 RIA was maintained at 86 percent.

Since publication of 1987 RIA, additional data were obtained that included inspection results about 12,000 nozzles in California.[37] These inspections took place in 1986 and 1987 in San Diego, San Francisco Bay Area, and in the South Coast (Los Angeles) areas of California. Based on discussions with personnel in each of these areas, semi-annual inspections would best represent their inspection program (See Chapter 6). The data available allowed comparison between older and newer nozzle equipment. The results of these inspections indicated an overall in-use efficiency of 92.5 percent for all nozzles, 92 percent for older nozzles, and 94 percent for newer nozzle equipment. The data from these inspections is used in Appendix E for the illustrative example.

Not taken in account in any of these in-use efficiency calculations is misinstallation of underground vapor piping. Figure 4-14 assumes 100 percent proper installation, operation, and maintenance of belowground vapor piping system.

In addition, Figure 4-14 presents only in-use efficiency of controls if they are installed at 100 percent of the dispensing facilities. Many areas may use size exemptions. Table 4-3 summarizes the gasoline consumption that would be exempted under different throughput level cutoffs. These gasoline consumption levels were calculated based on the size distribution information presented in Chapter 2. Figure 4-15 presents in-use efficiency for the different levels of exemptions. The curves are compared to the information in Figure 4-14, that represented essentially no exemptions.

In conclusion Figure 4-15 presents the range of in-use effectiveness of Stage II programs and its relationship to frequency of inspection and exemption levels. While it is well documented that Stage II systems can achieve 95 percent or better control efficiency, in-use efficiency is demonstrated to drop significantly without proper installation, operation, and maintenance by the owners and operators.

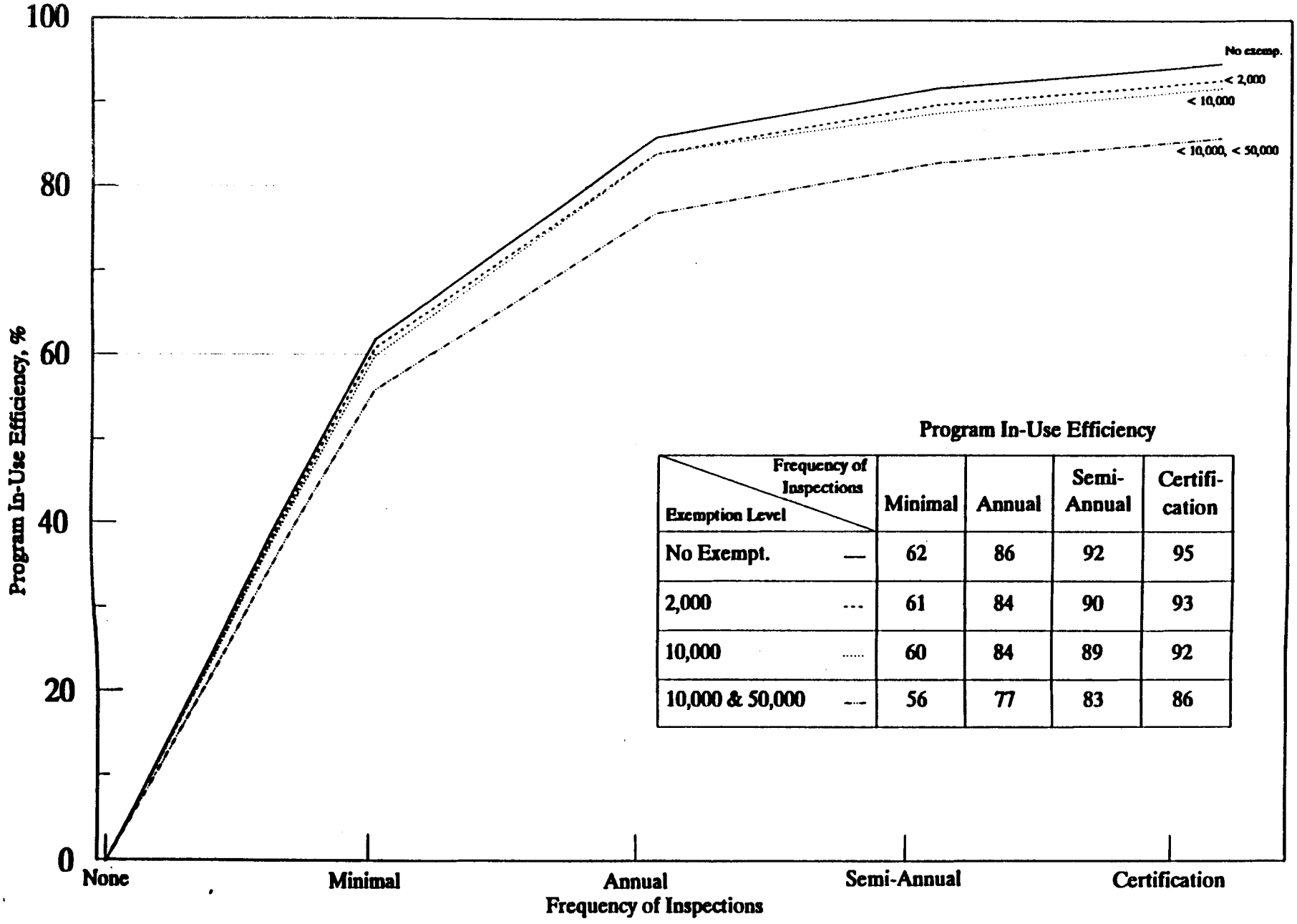

Program In-Use Efficiency

Exemption Level \ Frequency of Inspections	Minimal	Annual	Semi-Annual	Certification
No Exempt. —	62	86	92	95
2,000 ---	61	84	90	93
10,000	60	84	89	92
10,000 & 50,000 -.-	56	77	83	86

Figure 4-15. Relationship of Inspection Frequency to Program In-Use Efficiency with Exemptions

TABLE 4-3. PERCENT CONSUMPTION EXCLUDED WITH VARIOUS STAGE II EXEMPTION SCENARIOS

EXEMPTION SCENARIO	PERCENT CONSUMPTION EXCLUDED FROM REGULATION
EXEMPT STATIONS 2,000 GAL/MON	2.4%
EXEMPT STATIONS < 10,000 GAL/MON	2.8%
EXEMPT STATIONS < 10,000 GAL/MON AND INDEPENDENTS < 50,000 GAL/MON	10.0%

Exemption values based on metropolitan area throughput by model plant shown in Table 2-9, since most, if not all, nonattainment areas are metropolitan areas. Table 2-10 was used to estimate exemptions for independents. The following assumptions were used:

< 2,000 gal/mon = Model Plant 1a

< 10,000 gal/mon = Model Plant 1

< 10,000 gal/mon non-independents, < 50,000 gal/mon independents = Model Plant 1 plus independents in Model Plants 2 and 3

4.5 REFERENCES

1. McKinney, L. California Air Resources Board. Gasoline Vapor Recovery Certification. (Presented at the Air and Waste Management Association 83rd Annual Meeting. Pittsburgh, PA. June 24-29, 1990).

2. South Coast Air Quality Management District, "Phase II Vapor Recovery Evaluation Program", 1979.

3. California Air Resources Board. A Report to the Legislature on Gasoline Vapor Recovery systems for Vehicle Refueling at Service Stations. 1983.

4. Massachusetts Division of Air Quality Control. Stage II Gasoline Vapor Recovery Program Background Information and Technical Support Document. January 1989.

5. Telecon. Bowen, E., Pacific Environmental Services, Inc., with Walker, G., Motor Vehicles Manufacturers Association, and Brooks, D., Chrysler Corporation. October 31, 1991. Fillpipe standardization.

6. Telecon. Norwood, P., Pacific Environmental Services, Inc., to Strock, D., Amoco Research. April 30, 1991. Amoco bellowless nozzle.

7. Reference 1.

8. Reference 1.

9. Reference 1.

10. Memorandum from Norwood, P., Pacific Environmental Services, Inc. to Shedd, S., U.S. Environmental Protection Agency, Chemicals and Petroleum Branch. February 22, 1991. Trip Report to New Jersey Department of Environmental Protection.

11. Memorandum from Norton, R., Pacific Environmental Services, Inc. to Shedd, S., U.S. Environmental Protection Agency, April 29, 1991. Trip Report to New York Department of Environmental Conservation.

12. Memorandum from Norwood, P., Pacific Environmental Services, Inc. to Shedd, S., U.S. Environmental Protection Agency, April 30, 1991. Trip Report to California Agencies to Discuss Stage II.

13. Reference 12.

14. California Administrative Code, Section 41954.

15. State of California Air Resources Board, Certification Procedures for Gasoline Vapor Recovery at Service Stations, Method 2-2.

16. Reference 15.

17. State of California Air Resources Board, Test procedures for determining the efficiency of Gasoline Vapor Recovery systems at Service Stations, Method 2-1.

18. California Administrative Code, Section 41955.

19. California Administrative Code, Section 41957.

20. California Air Resources Board Compliance Division, Gasoline Vapor Recovery Certification Program, Schedule of Test Fees. March 1991.

21. Reference 12.

22. Telecon. Norwood, P., Pacific Environmental Services, Inc. to Parrish, D., Emco Wheaton. February 15, 1991. CARB Certification program.

23. Telecon. Norwood, P., Pacific Environmental Services, Inc. to Brown, B., OPW. April 13, 1991. CARB Certification Procedures.

24. Telecon. Norwood, P., Pacific Environmental Services, Inc. to Zimmerman, G., California Air Resources Board. October 17, 1991. Aboveground tank certifications.

25. Letter with attachments from Morgester, J., California Air Resources Board, to Shedd, S., U.S. Environmental Protection Agency. May 17, 1991. Information related to CARB Stage II program.

26. Reference 15.

27. Telecon. Norwood, P., Pacific Environmental Services, Inc. to McKinney, L., California Air Resources Board. May 13, 1991. Requirements of CARB Efficiency Test.

28. Reference 12.

29. Evaluation of Air Pollution Regulatory Strategies for Gasoline Marketing Industry. U.S. Environmental Protection Agency, Office of Air Quality Planning and Standards and Office of Mobile Sources. EPA-450/4-84-012a. July 1984.

30. Draft Regulatory Impact Analysis: Proposed Refueling Emission Regulations for Gasoline-Fueled Motor Vehicles -- Volume I - Analysis of Gasoline Marketing Regulatory Strategies. U.S. Environmental Protection Agency. Office of Air Quality Planning and Standards and Office of Mobile Sources. EPA-450/3-87-001a. July 1987.

31. Reference 3.

32. Sierra Research, An Analysis of Stage II and Onboard Refueling Emissions Control, prepared for Motor Vehicle Manufacturers Association, Inc. November 30, 1988.

33. Reference 29.

34. Reference 30.

35. Reference 29.

36. Reference 30.

37. Evaluation of Air Pollution Regulatory Strategies for Gasoline Marketing Industry - Response to Public Comments. U.S. Environmental Protection Agency. Office of Air Quality Planning and Standards and Office of Mobile Sources. EPA-450/3-87-012c. July 1987.

38. Reference 3.

39. Inspection Summaries of California Air Resources Board Phase II Vapor Recovery Inspections. August 1986 through October 1987. Received from McKinney, L., CARB. October 1991.

5.0 STAGE II COSTS

The purpose of this chapter is to present the costs associated with the purchase, installation, and operation of Stage II equipment. This cost information is useful to State and local regulatory authorities when evaluating the cost impacts or burdens of a proposed Stage II vapor recovery program, and to weigh these cost impacts against the emission reduction benefits achieved. In addition, this information is useful when reviewing cost burdens presented by commenters when implementing a Stage II program.

Developing and evaluating cost estimates for Stage II systems has been a difficult task. EPA and industry have evaluated unit costs using unit cost estimate approaches as well as total cost estimate approaches from quotes from stations that have recently installed and purchased Stage II systems. In addition, these studies came at a time when each study was trying to influence a decision between Stage II and onboard refueling controls. These cost methods were used and issued in a number of recent Stage II cost studies by industry and EPA.

The unit cost estimate approach was based on model station sizes and equipment specifications for all components in a Stage II system. The cost of each piece of necessary equipment was obtained, along with its installation and maintenance costs. These costs were then summed to produce a "ground-up" estimate of Stage II costs.

The total cost estimate approach, using cost quotes surveyed from stations that have installed Stage II equipment, is a simpler approach to obtaining Stage II costs, but has many drawbacks. Some stations keep detailed

cost records on Stage II installation while others will have only the total cost. This makes comparison of costs very difficult. Compounding this problem is most stations remodel or replace storage tanks or dispensers at the same time they are installing Stage II systems. These non-Stage II costs can, in many cases, be much higher than Stage II installations costs. Trying to compare a mixture of detailed and non-detailed cost quotes, and attempting to subtract out non-Stage II costs, can not only be difficult and some times impossible to perform, but can add multiple assumptions and uncertainties into what were once "actual" Stage II costs. Without detailed costs it is also impossible to analyze the reasons associated with any outlier costs obtained from a total cost survey. This chapter discusses and presents results of both cost approaches, and compares all of the recent cost studies performed or provided to EPA to provide the user with a range of costs to use in their own assessment.

The costs presented in this chapter are divided into aboveground and below-ground components. Aboveground equipment consists of all the nozzles, hoses, swivels, check valves, and other related components needed at the dispensers to capture the vapors displaced during refueling. The costs presented are limited only to equipment that has been certified by the California Air Resources Board (CARB) and is currently being marketed for Stage II systems. The below-ground equipment consists of the piping needed to route the vapors back to the underground tank. The aboveground costs at a facility are driven by the number of nozzles present at the service station, while underground costs are driven by the physical layout of the facility.

Many times commenters will present Stage II costs on a dollar per nozzle basis. But because underground costs are not dependent on the number of nozzles, and because underground costs can represent more than half of the Stage II costs, reporting costs on a dollar per nozzle basis is

not very useful. This report presents costs for the entire vapor recovery system, broken down into aboveground and below-ground components. Because there can be an infinite number of service station configurations, costs are only presented for model facilities (discussed in Chapter 2), chosen to represent a cross section of the service station industry.

Cost for key components (those having the biggest cost impact and those requiring the most replacements) will be discussed. Because most areas implementing Stage II have been taking advantage of the California certification efforts by allowing only systems certified in California, component costs are presented only for certified components.

In this chapter discussions of current equipment costs for above and below ground components are presented. Also presented is a discussion of capital and annual costs for model facilities, a comparison of model plant costs with several cost surveys conducted in St. Louis, and a presentation of the latest 1991 Stage II cost estimates.

5.1 EQUIPMENT, INSTALLATION, AND ANNUAL COSTS

As discussed above, the costs are presented separately for aboveground components and underground components. Also presented in this section is a discussion of the impacts the underground storage tank (UST) program could have on Stage II implementation costs.

5.1.1 Aboveground Costs

The aboveground costs are associated with the hardware necessary to capture the vapors displaced at the vehicle fillneck during vehicle refueling. The discussions of unit costs will be limited to certified components. Appendix D contains a list of CARB's certified systems and a list of the equipment specific to those systems. Most maintenance items and replacement components are associated with the aboveground equipment. The discussion in this section will be more detailed for the higher cost, more maintenance

intensive equipment (i.e., nozzles and hoses), and less detailed for the lower cost, less maintenance intensive equipment (i.e., swivels, check valves, etc.).

Costs presented in this chapter do not include costs for the Amoco bellowless nozzle system. As discussed in Chapter 4, full scale production of this system has not occurred. An Amoco representative stated that the actual installed costs once a wide spread production began could not be estimated at this point.

5.1.1.1 Nozzles. The vapor recovery nozzles discussed in Chapter 4 are the key to the vapor recovery capture. Without a proper functioning and well maintained nozzle, emissions capture can be almost zero. Appendix D lists the nozzles approved for use for the balance, hybrid, and vacuum assist systems. Information is presented for all configurations and generations of nozzles, however the costs in this section will be presented only for the latest equipment on the market today. California maintains certification lists for older generation equipment since many of these systems are still being used. New Stage II programs, however, are excluding most older equipment and are limiting acceptable Stage II systems to those of the latest design. For example, New York will allow only fourth generation or newer vapor recovery components[1] and St. Louis will allow only coaxial nozzles and hoses and will not allow twin hose configurations.[2]

The newest of the certified balance nozzles are the A4005 from EMCO Wheaton, the 111V from OPW and the Model V from Husky. These are the only certified balance system nozzles being offered by the original equipment manufacturers. The cost for these nozzles and for vacuum assist nozzles are comparable at about $240.[3,4,5] Individually these cost seem small, but the costs can mount up quickly when there a large number of nozzles, especially if the station uses multi-product dispensers (the multi-product dispenser for this document refers to a dispenser

providing three products on each side of the dispenser, one nozzle per product, resulting in six nozzles per dispenser).

The portions of the nozzle most susceptible to wear are the nozzle faceplate and bellows. These are also key items in the vapor capture system. These components cost about $15 for the faceplate,[6] and about $30-50 for a bellows replacement kit.[7,8] The life of the equipment will vary, but a service station can expect, on average, to replace bellows and faceplates about three times per year for balance systems and two times per year for vacuum assisted systems.[9]

Other components in the nozzle (i.e., shutoff mechanisms, no seal/no flow check valves, etc.) are more difficult to repair. If these components fail, the nozzle usually has to be replaced. The station operator can replace the nozzles with new equipment at the cost stated above or can reduce his costs by purchasing "rebuilt" nozzles. Rebuilt nozzles use the same core but with new components built inside. Nozzle manufacturers will rebuild nozzles and sell them back at a reduced price. The manufacturers buy back the cores of the used nozzles, repair and resell them as certified nozzles. Core credits given by the manufacturers are typically around $50. Rebuilt nozzle costs range from $145[10] to about $190.[11]

The State of New York only allows rebuilt nozzles repaired by the original equipment manufacturer. California, on the other hand, has certified rebuilt nozzles by two rebuilding companies, Rainbow and EZ-flo. These nozzles have been certified for use in balance system installations. The cost of these nozzles are about $190.[12] Table 5-1 summarizes the costs associated with purchase and maintenance of Stage II vapor recovery nozzles.

5.1.1.2 Hoses. The original Stage II systems incorporated a twin hose approach to vapor recovery. One hose transferred the liquid, as in conventional vehicle refueling, and an identical hose was used as a vapor return hose. These hoses were relatively inexpensive at about

TABLE 5-1. PURCHASE COSTS FOR VAPOR RECOVERY NOZZLES AND REPLACEMENT PARTS[3,4,5]
(May 1991 Dollars)

Item	Cost
Nozzle Costs	
New Nozzle	$240
Core Return Credit	$50
Rebuilt Nozzle	$190
Component Costs	
Nozzle Boot	$25
Boot Kit	$40
Face Seal Kit	$15
Clamp Kit	$5
Boot Assembly Kit	$30-50

$30.[13] However, the twin hose systems were very hard to operate. Coaxial vapor return hoses eliminated the difficulties caused by twin hoses but cost considerably more. Coaxial systems represent the latest technology in use in California and are required on all new installations. They also are the only systems allowed in St.Louis, New York, New Jersey and Dade County, FL. A wide variety of materials and manufacturers are being offered for new Stage II coaxial hose systems. Manufacturers of certified coaxial vapor recovery hoses include Goodrich, Goodyear, Dayco, Gates and Thermoid. New hose materials make the latest hoses more durable and, at the same time, more lightweight and flexible. The costs for the coaxial hose range from $140 to $230.[14,15,16] (See Table 5-2.)

Hose life has been extended greatly because of the new material, and because of the requirement for high hang hose retractors or high hang dispensers. These requirements force the hoses up off the ground and minimize or eliminate hose problems such as collapsed hoses from being run over by a vehicle, or hose tears and wearing from being constantly scuffed on the ground. With the use of high hang hose retractors or high hang dispensers, it is conservatively assumed that vapor hose replacement would occur only on an annual basis.

High hang hose retractors and high hang dispensers also minimize vapor path blockage in the vapor hose caused by spitback or by liquid condensation. For high-hang multiproduct dispensers, venturi trap are required. These liquid removal systems consist of a small tube inserted in the vapor line extending to the low point of the hose. A venturi is placed in the liquid delivery hose and dispensed liquid passing through the venturi creates a vacuum in the tube. This vacuum draws the liquid from the low point in the hose into the liquid delivery hose. Liquid removal systems can be purchased separately or in conjunction with a coaxial hose assembly. These systems cost $200 if purchased

separately[17] or $240-$430 if purchased with a coaxial hose assembly.[18] Table 5-2 summarizes the costs associated with vapor recovery hose purchase and replacement.

5.1.1.3 Other Components. Other components that must be purchased with the aboveground equipment could include high-retractor hose assemblies, hose breakaway fittings, vapor check valves, swivels (nozzle, island, dispenser, retractor), flow limiters, and hose splitters. Table 5-3 illustrates typical costs associated with these components. These pieces of equipment are not expected to wear or fail at the same rate as nozzles, bellows, faceplates, or hoses, and are expected to operate relatively maintenance free.

5.1.1.4 Dispenser Modifications. Product dispensers at existing service stations will have to be converted to allow the installation of vapor return piping. Conventional dispensers will typically have room within the dispenser to allow the vapor piping riser to extend into the dispenser and exit out the side. Newer dispensers, such as multi-product dispensers, may have to be converted to allow the installation of the vapor piping through the dispenser housing and back into the underground piping. California has included such dispenser modifications as part of a certified system since the manner in which the piping is plumbed through the dispenser could affect the backpressure experienced in the vapor line at the nozzle, thereby affecting the system's ability to recover the vapors. Typical costs to modify an existing dispenser is about $50-60.[19]

5.1.1.5 Vapor Processors. The Hirt and Hasstech CARB certified vacuum assist systems use a thermal oxidizer as the vapor destruction device. The thermal oxidizer system necessary to transport vapors from the underground tank to the vapor processor consist of a pilot/ignition system, vapor pump, PV vents, etc. The cost of a vapor processing system is about $4,000.[20]

TABLE 5-2. TYPICAL VAPOR RECOVERY HOSE COSTS[13,14,15]
(May 1991 Dollars)

Item[a]	Costs
Coaxial Hose	$140-$230
Liquid Removal System	$200
Coaxial Hose with Removal System	$240

[a] Costs presented for a typical 10 foot hose system.

TABLE 5-3. TYPICAL COSTS OF OTHER VAPOR RECOVERY COMPONENTS[10,12,13]
(May 1991 Dollars)

Item	Costs
High hang hose assembly	$100
Hose break away fittings	$140
Vapor check valves	$80
Swivels	
Nozzle	$60
Island	$60
Dispenser	$60
Retractor	$60
Flow limiters	
Hose splitters	$60

The vapor pump and the vapor processor will require additional adjustments and repairs. It has been estimated that annual maintenance costs would be as much as $400-600 per year.[21]

5.1.1.6 Installation. Installation of the aboveground equipment consists of assembling the hoses, nozzles, swivels, check valves, etc., and attaching the nozzle/hose assembly to the vapor piping exiting the dispenser. It has been estimated that installation would cost about $80 per nozzle. If a vacuum assist unit is being installed an additional $1,300 would be necessary to take care of the thermal oxidizer and vapor pump installation.[22] The Healy System requires the installation of the jet pump used to create the vacuum in the vapor return line. It has been estimated that the installation of the jet pump would cost $535.[23]

5.1.2 Underground Piping

The underground portion of the vapor recovery system consists of all the underground piping and fittings necessary to allow the captured vapors to be returned to the underground storage tank. Costs of the underground components are directly affected by the service station configuration (i.e., the number of islands, the distance between islands, the distance from the islands to the underground tank), the type of system (individual balance system, manifolded balance system, hybrid system, or vacuum assist system) and other station physical characteristics (amount of concrete over underground tanks, amount of backfill material required, or whether the storage tanks are located above the islands). The following subsections discuss some of these costs in more detail.

5.1.2.1 Vapor Piping. Most vapor recovery piping being used in recent installations consists of fiberglass pipe. Reasons usually cited for using this type of piping is that it is leak resistant, easy to work with, and easy to install (i.e., glued not threaded). Typical vapor piping

consists of 2 inch or 3 inch pipe laid in a trench, sloping down to the underground tank. The amount of piping required is certainly affected by specific facility distances, but also whether individual or manifolded vapor piping is used.[24] Table 5-4 summarizes the piping differences between a manifolded vapor balance system and an individual vapor balance system. Vacuum assist systems can either be manifolded or individual. Table 5-5 summarizes the piping costs for different certified systems assumed for a typical 9 nozzle, 65,000 gallon per month service station.

5.1.2.2 Trenching and Backfilling. The majority of the costs associated with the underground piping tied to the costs of digging the trenches. The trenches must be dug from the dispensers to the underground tanks to allow the laying in of the vapor piping, assuring proper slope from the dispensers down to the underground tanks . Further costs are involved with backfilling the trenches and repairing the pavement. Digging the trenches requires cutting through the concrete pad over the storage tanks and at the islands, probably shutting down the station, and using a backhoe to dig the trench back to the underground tanks. Costs associated with trenching are difficult to obtain since it is not hardware related, but consists of labor and heavy equipment charges. From a previous analysis, EPA derived trenching and backfill costs based upon an estimate obtained from a Stage II system installer. This cost averaged about $30 per foot of trench.[25]

A great deal of importance is given to the proper installation of the underground piping. Improper slope, poor backfilling, and ground settling all can cause breaks or low points in the vapor piping system. Breaks in the vapor piping can cause vapor leaks in the system, and low points in the piping can provide the potential for liquid accumulation resulting in liquid blockage. Some areas of California have indicated that as many as 50 percent of the underground systems are incorrectly installed.[26]

TABLE 5-4. PIPING COMPONENT DIFFERENCES BETWEEN INDIVIDUAL AND MANIFOLDED BALANCE SYSTEM[23]

Underground Components	Number of Components	
	Individual Balance System	Manifolded Balance System
Galvanized Pipe for Vapor Risers		
1" Pipe (FT)	10	10
2" Pipe (FT)	2	
3" Pipe (FT)		2
3/4" Close Nipple	7	7
1" Close Nipple	13	13
2" Close Nipple	3	
3" Close Nipple		6
1" Elbow	13	13
2" Elbow	6	
3" Elbow		6
1" x 3/4" Reducer	7	7
2" x 1" Reducer		7
3" x 2" Reducer		3
4" x 2" Bushing	3	
Fiberglass Pipe for Vapor Return Piping		
2" Pipe (FT)	476	86
3" Pipe (FT)		125
2" Threaded adapter	10	10
3" Threaded adapter		3
2" Elbow	16	2
3" Elbow		2
2" Tee	3	2
3" Tee		3
2" Coupling	9	1
3" Coupling		2
3" x 2" Reducer		4
Glued Junctions	34	26
Additional Items		
4" x 3" Tank Bushing		3
2" Float Check Valve		3
Vent Manifold Drum		1
Bungs	1	1
Trenching/Assembly (ft)	165	165

TABLE 5-5. TYPICAL VAPOR PIPING COSTS FOR 65,000 GALLON PER MONTH SERVICE STATION[23]

	Vapor Piping Costs
Individual Balance System	$7,700
Manifolded Balance System	$8,000
Healy Assist System	$7,700
Vacuum Assist System[a]	$7,000

[a] Average of both the Hirt and Hasstech certified vacuum assist systems.

California, New York and several other Stage II areas in the country now require tests to be conducted on the underground piping. These tests, discussed in Chapter 6, consist of the liquid blockage, pressure decay, and backpressure tests. It is estimated that the costs to perform these tests is a total of $670.[27]

A common occurrence over the last several years is that station owners across the country have been installing Stage II underground piping whenever modifications were undertaken that required excavation. This will reduce installation costs for a great number of stations.

5.1.3 Affects of the UST Program

Stage II installation costs can be affected by a simultaneous Stage II/UST program implementation by considering the cost savings of installing Stage II at the time underground tanks are being repaired or replaced. The potential cost savings are realized in reduced trenching and paving costs that would have been attributed to the Stage II installation in the absence of any UST activity.

The key items for determining the impacts of a simultaneous Stage II/UST program on installation costs is to determine how many tank system leaks will occur and what equipment will be excavated during repairs or replacement. Several assumptions had to be made concerning the number and type of repairs required under an UST program. These assumptions on number or frequency of repair are drawn from a previous analysis and are presented in Table 5-6.

Table 5-6 further summarizes the possible actions taken in response to finding a leak in either the underground piping or underground tank. For each remedy action, the percent of all tank systems assumed to use that remedy is listed. A description is added that summarizes the resulting savings in Stage II trenching associated with each remedy. For example, both Actions 1 and 4 (dig up all piping, and dig up all piping and tanks) result in the

TABLE 5-6. ACTIONS TAKEN IN RESPONSE TO FINDING A LEAK IN AN UNDERGROUND TANK SYSTEM[a]

Action	Percent of all Systems	Description of Savings in Stage II Piping Installation	Percent of Costs Saved[a]		
			Underground Capital Costs	Total Capital Costs	Annual Costs
1. Dig up all piping	4.5%	All trenching costs	65%	40%	25%
2. Dig up end of tanks only	11.8%	Trenching costs over end of all tanks	10%	7%	5%
3. Dig up end of tanks and under dispensers	1.3%	Trenching costs over all tanks and under all dispensers	30%	20%	15%
4. Dig up all piping and tanks	12.5%	All trenching costs	65%	40%	25%
5. Dig up only one tank	1.9%	Trenching costs over one tank	8%	5%	3%
6. Repair one leaking tank	3.1%	Trenching costs over one tank	8%	5%	3%
Total	35.0%				

[a] Cost percentages for a typical 65,000 gallon/month station.

savings of all trenching costs. Also presented in Table 5-6 is the resulting percentage savings in total Stage II costs that would occur under each action.

A further discussion of cost savings associated with simultaneous Stage II/UST programs can be found in Appendix K of the 1987 Regulatory Impact Analysis (RIA), Volume I concerning gasoline marketing strategies.[28]

5.1.4 Recovery Credits

Another aspect of the annual costs for Stage II systems is recovery credits. As discussed in Chapter 2, the return of saturated vapors to the storage tank during vehicle fueling eliminates the inbreathing of fresh air and subsequent evaporation of liquid gasoline. Each gallon of gasoline that is prevented from evaporating represents a gallon of product the station owner can sell that would not be present in the absence of Stage II controls. The earnings generated from this gasoline that would have otherwise have evaporated are counted as recovery credits.

Recovery credits may be calculated as follows. Assuming 95 percent recovery of both displacement and emptying losses,

$$\text{recovered vapor} = ((1{,}340\ \text{mg/liter})(.95)) + ((120\ \text{mg/liter})(.95)) = 1{,}387\ \text{mg/liter}.$$

Example of recovery credit:

$$1{,}387\ \text{mg/liter} \times 75{,}700\ \frac{\text{liters}}{\text{mo.}} \times \frac{\text{kg}}{10^6\text{mg}} \times \frac{\text{liter}}{0.67\text{kg}} \times \frac{12\ \text{mo.}}{\text{yr}} \times \$0.275/\text{liter} = \$518/\text{year}.$$

5.2 MODEL PLANT COSTS

Costs in this section are presented for the model plants described in Chapter 2 of this report. Because of the infinite variations in service station layout and design, model plants were developed to represent the industry and to fix the physical parameters of each facility. In addition to the items specified in Table 2-5, such as throughput and number of nozzles, the physical design of each model station was developed. This included

distances from the dispensers to the tank to fix trenching lengths, and designs of piping scenarios to fix piping costs.

A detailed cost model was developed by EPA, in the 1987 Draft Regulatory Impact Analysis (RIA), that created "ground-up" costs for each model plant.[29] This model used the piping layouts described above and detailed component costs for aboveground equipment. Costs were obtained for all certified equipment and averaged to estimate capital and installed costs for each component. Costs were also obtained for fiberglass pipe and fitting costs, installation labor, and trenching costs. For convenience, a detailed discussion of this model is reproduced in Appendix B of this document.

5.3 COMPARISON OF RECENT COST STUDIES

EPA solicited and received public comments on the 1987 RIA associated with the proposal of onboard controls for vehicle refueling. EPA received public comments concerning Stage II costs from many sources including oil companies, service station dealers, and auto manufacturers. Of particular interest to EPA were comments received from the American Petroleum Institute (API)[30] and from Multinational Business Services, Inc. (MBS)[31] (under contract to the Motor Vehicle Manufacturers Association and the Auto Importers of America). These comments were of interest because these two groups conducted their own cost analyses of Stage II equipment installed in St. Louis and attempted a comparison with the EPA cost analysis found in the Draft RIA on the onboard proposal, (see Appendix B). The majority of the remaining comments provided little or no cost breakdown, making cost comparisons impossible. In addition to comments received on Stage II costs, Pacific Environmental Services, Inc. (PES), under EPA contract, conducted an independent analysis of Stage II installation costs in St. Louis, Missouri and compared the costs they obtained with the

industry studies and with the Draft RIA.[32] Stage II costs in St. Louis were considered important at that time because Stage II installations were recently completed in this metropolitan area, and conflicting cost information was received during the public comment period.

As stated before, the Draft RIA used a "ground-up" model of Stage II costs, whereas, the API, MBS, and PES studies were all surveys of Stage II costs in St. Louis. As discussed earlier in this chapter, direct comparison of cost surveys conducted by different groups is often difficult especially if cost breakdowns are not available. Cost breakdowns allow an analysis of the make-up of the costs, and ensures that like costs are being compared (i.e., only Stage II related costs were included in the reported costs). Cost breakdowns and raw data for all industry surveys were not available to allow direct comparison to EPA cost models.

5.3.1 Capital Cost Comparison

Stage II system installed capital cost estimates from all data sources are shown in Table 5-7. These average Stage II system costs are graphically depicted by model plant category in Figure 5-1. This plot is useful in making "snapshot" comparisons among the data sources for each of the model plant categories. In order to determine a trend or relationship among each of the subject data sets, a linear regression method was used. The linear function was determined as most representative, based on the use of correlation coefficient (R-squared) values as criteria for best fit. Figure 5-2 illustrates the relationship of capital cost versus model plant category after the application of the "best fit" line. No information was presented in the API Report to explain why the "major" costs were so much higher than the "Jobber" costs. Because of the large differences these costs are depicted separately on these figures.

Capital cost data submitted by API suggested that EPA had, on average, understated costs by about 40 percent.

TABLE 5-7. SUMMARY OF STAGE II SYSTEM CAPITAL COST ESTIMATES FROM ALL SOURCES[26,28,30,31]

Model Plant No.	Cost Estimate Source	Total System Capital Costs
1	Draft RIA	$5,492
	API-Jobber	$11,262
	API-Major	-[a]
	MBS	$5,616
	PES	$5,352
2	Draft RIA	$7,007
	API-Jobber	$12,168
	API-Major	-[a]
	MBS	$6,517
	PES	$7,936
3	Draft RIA	$11,962
	API-Jobber	$16,094
	API-Major	$17,479
	MBS	$9,108
	PES	$12,913
4	Draft RIA	$15,855
	API-Jobber	$20,020
	API-Major	$28,565
	MBS	$11,750
	PES	$14,524
5	Draft RIA	$22,917
	API-Jobber	$27,872
	API-Major	$41,831
	MBS	$24,663
	PES	$24,523

[a] No data reported.

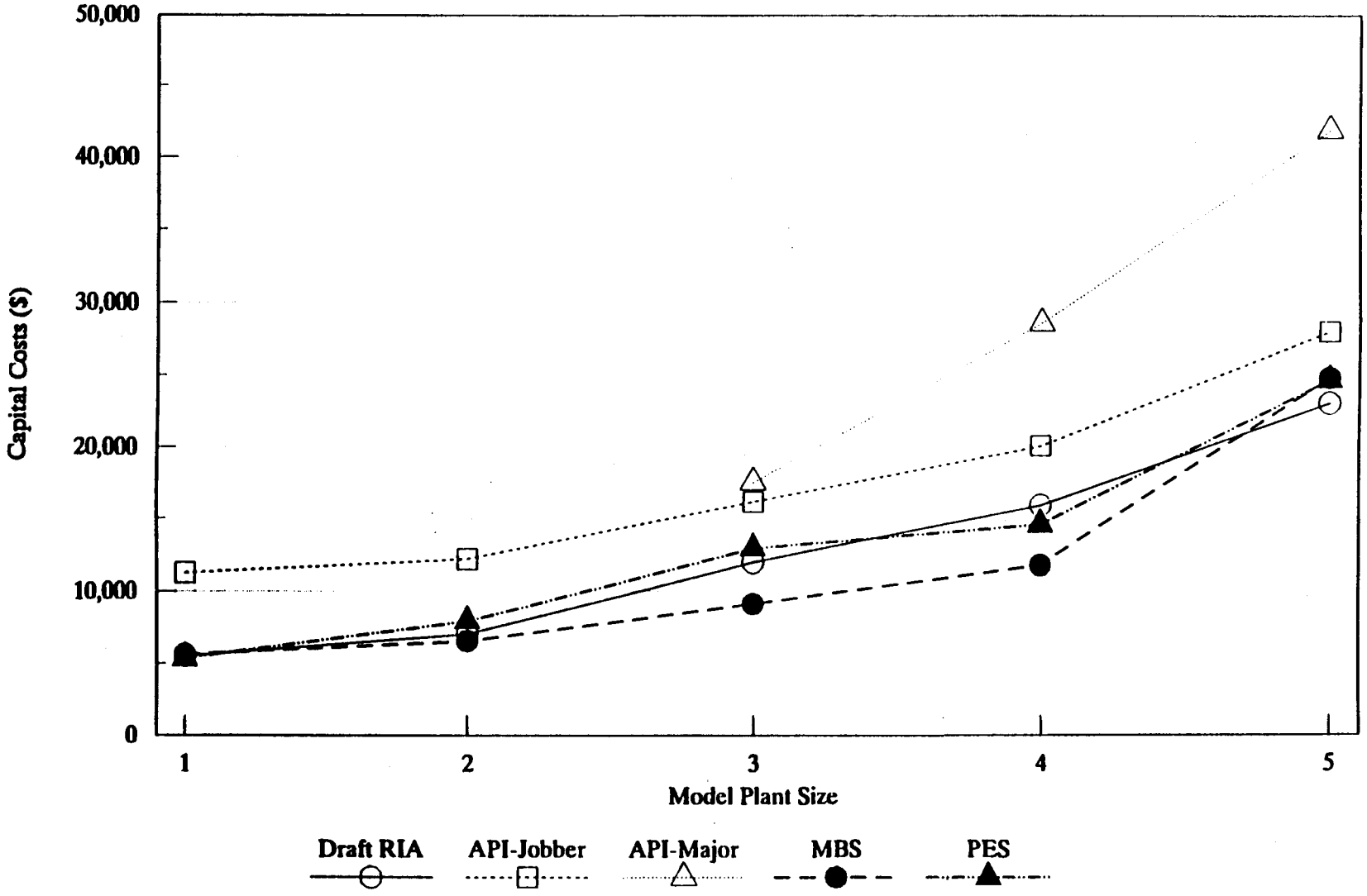

Figure 5-1. Comparison of Installed Capital Costs Lines Based on Data Point Averages

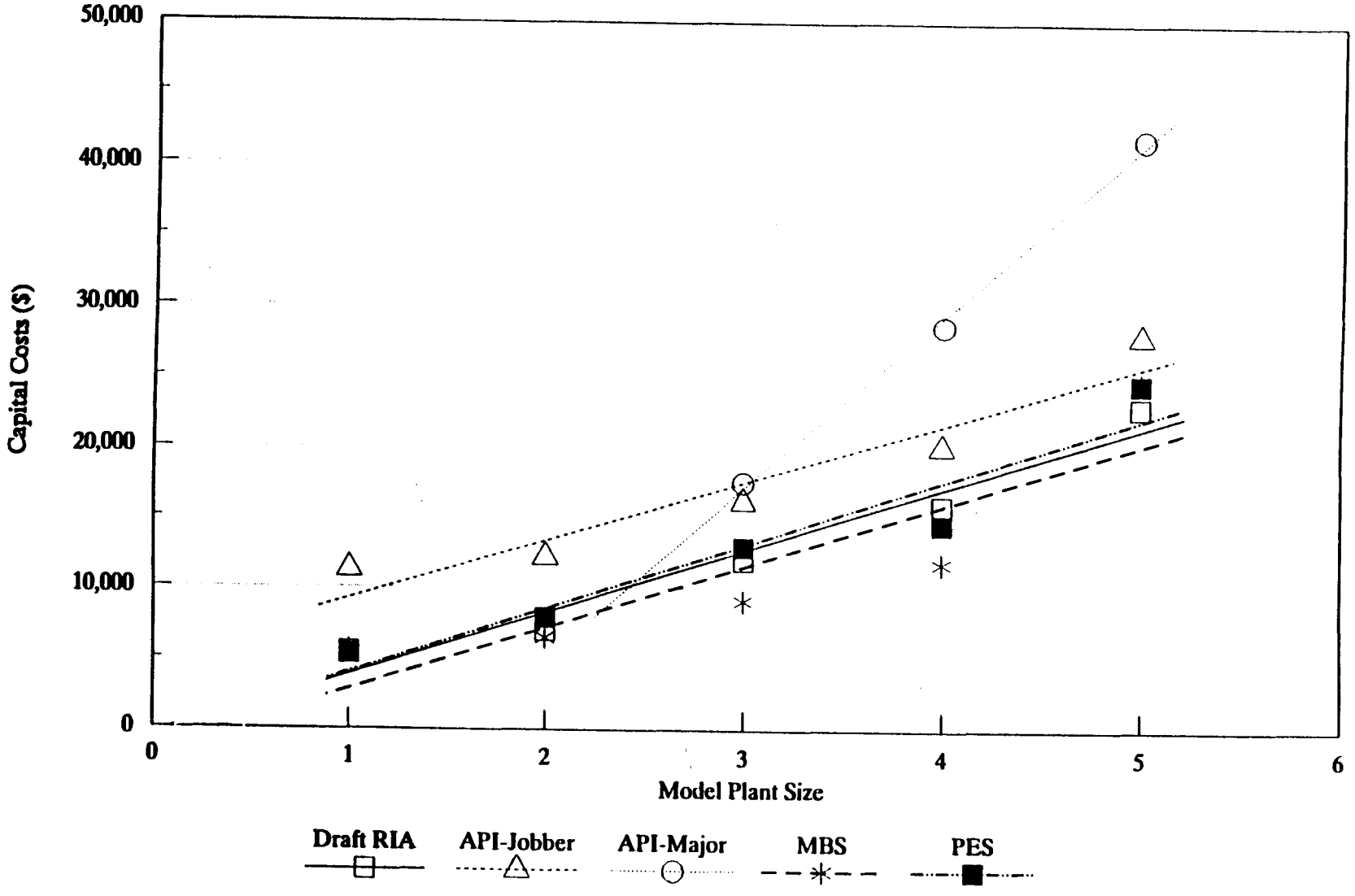

Figure 5-2. Comparison of Installed Capital Costs Lines Based on Linear Regression

Capital costs submitted by MBS suggested EPA had, on average, overstated costs by about 20 percent. Stage II costs published in the Draft RIA with the onboard proposal fell between the costs submitted by these commenters. In addition, the St. Louis data obtained by PES also fell between the API and MBS costs and compared favorably (within 5 percent) with the Draft RIA costs. The fitted curves of Figure 5-2 illustrate that PES' costs were close to the Draft RIA costs for the smaller model plants and between the Draft RIA and API costs for the larger model plants.

5.3.2 Annual Cost Comparison

The commenters supplied annual costs associated with the estimated capital costs of the Stage II systems on a model plant basis. However, difficulties arose in summarizing and comparing these costs because each commenter used different cost assumptions for: (1) annualized cost of capital, (2) maintenance costs, (3) recovery credits, and (4) the number of nozzles assigned to each model plant. In an effort to normalize these variations, each capital cost estimate presented in Section 5.3.1 was converted to annualized costs using EPA's cost methodology from the Draft RIA and using the same assumptions for equipment life (8 years aboveground equipment, 35 years below-ground equipment), interest rate (10 percent), taxes and insurance (4 percent), and calculation and costs dealing with recovery credits.[33] Maintenance costs were considered the same for each annual cost estimate.

Table 5-8 summarizes the annual cost estimates normalized using the assumptions above. These estimates are graphically depicted in Figures 5-3 and 5-4.

5.4 CURRENT COSTS OF STAGE II SYSTEMS

Based on the comparisons discussed in Section 5.3, it can be concluded that the ground-up model from the Draft RIA (reproduced and presented in Appendix B) provided a reasonable estimate of actual Stage II installations. This

TABLE 5-8. SUMMARY OF NORMALIZED STAGE II SYSTEM ANNUAL COST ESTIMATES FROM ALL SOURCES

Model Plant No.	Cost Estimate Source	Normalized Annual Costs
1	Draft RIA	$1,270
	API-Jobber	$2,045
	API-Major	NA[a]
	MBS	$1,288
	PES	$1,244
2	Draft RIA	$1,280
	API-Jobber	$1,953
	API-Major	NA[a]
	MBS	$1,195
	PES	$1,515
3	Draft RIA	$2,380
	API-Jobber	$2,848
	API-Major	$3,163
	MBS	$1,893
	PES	$2,559
4	Draft RIA	$2,960
	API-Jobber	$3,363
	API-Major	$4,764
	MBS	$2,230
	PES	$2,726
5	Draft RIA	$2,430
	API-Jobber	$2,833
	API-Major	$5,129
	MBS	$2,765
	PES	$2,847

[a] Cannot be calculated since no capital costs reported.

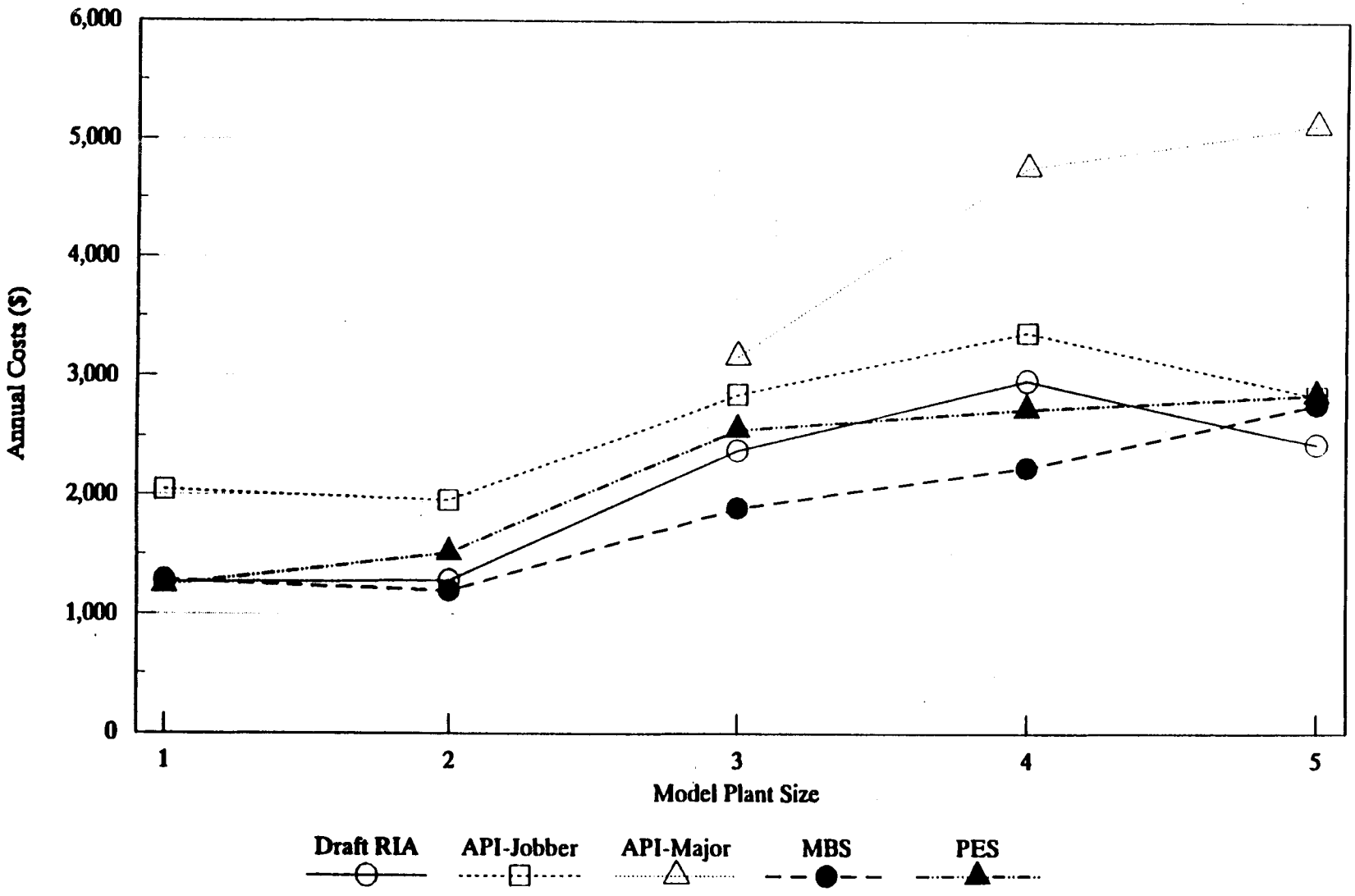

Figure 5-3. Comparison of Annual Costs
Lines Based on Data Point Averages

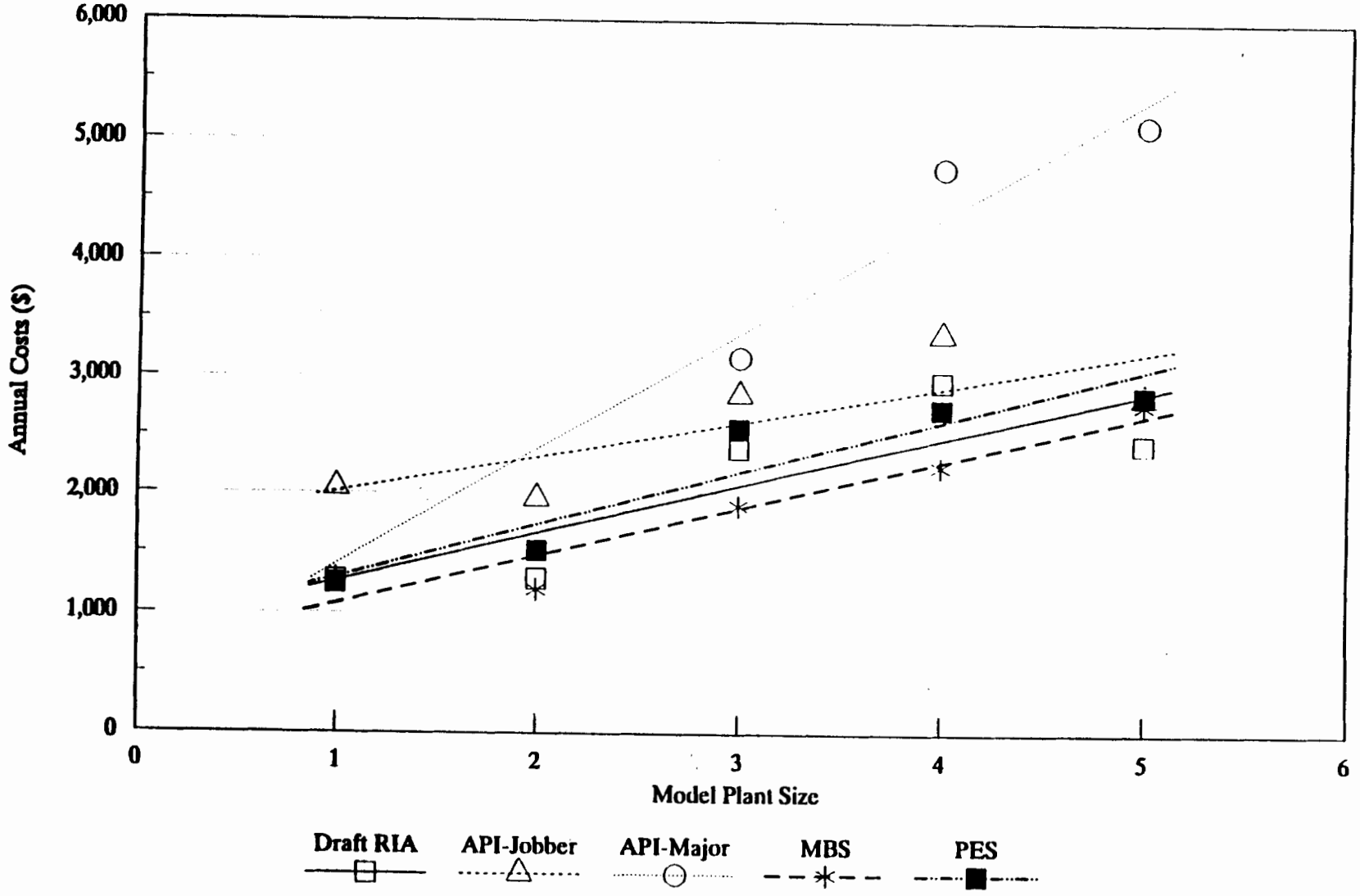

Figure 5-4. Comparison of Normalized Annual Costs Lines Based on Linear Regression

model was, therefore, used to estimate current 1991 Stage II costs. The model in Appendix B was used, but replacing key component costs to reflect 1991. Table 5-9 contains a summary of the cost data changed from the Draft RIA analysis to generate 1991 costs. As stated earlier in this document, multi-product dispensers, offering each of three gasoline grades on each side of the dispenser, have increased in popularity in recent years. The Draft RIA made an attempt to estimate the mix of single and multi-product dispensers to calculate a national Stage II cost impact. For purposes of this document two separate estimates have been made, one to represent single dispensers and one to represent multi-product dispensers. Table 5-10 summaries 1991 capital costs of Stage II systems for single dispenser facilities and 1991 capital costs for multi-product dispensers. Annualized costs were also calculated using the approach discussed in Appendix B, but using the 1991 capital costs and the 1991 RVP and gasoline price for recovery credit calculations. Table 5-11 summarizes annual costs for single and multi-product dispensers, respectively.

Another important factor to consider when reviewing Stage II costs is system cost effectiveness. Cost effectiveness is the annual operating costs divided by the annual emission reduction, yielding a value of dollars spent per unit measure of emission reduction. Table 5-12 presents the 1991 cost effectiveness of Stage II systems, expressed as dollars per megagram of emission reduction. Again, values are presented for both single and multi-product dispensers facilities.

The program effectiveness or overall emission reduction is dependent on the exemption level selected, as indicated in Section 4.4.3. The cost effectiveness of the program is also dependent on the exemption level imposed. Smaller facilities have higher cost effectiveness values (see Table 5-12). Program cost effectiveness, therefore, improves by

TABLE 5-9. SUMMARY OF COST ITEMS CHANGED IN APPENDIX B COST MODEL TO OBTAIN 1991 COSTS

Item	Cost
Nozzle Costs (New)	
Emco Wheaton	236.84
OPW	221.05
Husky	237.60
Nozzle (Rebuilt)	
Emco Wheaton	192.98
EZ-flo (OPW or Emco Wheaton)	144.74
Component Costs (Spout kit)	
Emco Wheaton	26.56
Husky	20.86
OPW	17.46
EZ-flo (OPW or Emco wheaton)	
Boot Kit	
EZ-flo	22.26
Husky	50.65
Emco Wheaton	35.78
Hoses (10 ft, w venturi)	
Thermoid	237.50
Goodyear	246.36
Dayco	389.54
Hoses (10 ft., w/o venturi)	
Thermoid	141.94
Goodyear	155.87
Dayco	125.16
Breakaways (one time)	
Dayco	47.70
Husky	66.65
Breakaway (reconnectable)	
Husky	143.30
Petroleum	180.31
EMCO Wheaton	125.35

TABLE 5-9. SUMMARY OF COST ITEMS CHANGED IN APPENDIX B COST MODEL TO OBTAIN 1991 COSTS (CONTINUED)

Item	Cost
Miscellaneous Equipment	
12" whiphose	
Goodyear	42.54
Thermoid	48.76
Dayco	47.69
Retractor Clamp	
Goodyear	10.26
Thermoid	9.06
EZ-flow (Dayco)	6.45
(Goodyear, Thermo, and Gates)	7.17
High Hang Hose Retractors	
Catlow	163.00
	96.30
Swivels	50.50

TABLE 5-10. 1991 STAGE II BALANCE SYSTEM CAPITAL COST

COMPONENT	COST OF COMPONENT	
MODEL PLANT 1	SINGLE DISPENSER	MULTIPRODUCT DISPENSER
Number of Nozzles	2	4
Dispenser Direct Cost	1,580	3,210
Piping Direct Cost	3,910	3,910
Total Capital Cost	5,490	7,120
MODEL PLANT 2		
Number of Nozzles	3	6
Dispenser Direct Cost	2,370	4,810
Piping Direct Cost	4,950	4,950
Total Capital Cost	7,320	9,760
MODEL PLANT 3		
Number of Nozzles	6	12
Dispenser Direct Cost	4,740	9,620
Piping Direct Cost	7,860	7,860
Total Capital Cost	12,600	17,480
MODEL PLANT 4		
Number of Nozzles	9	18
Dispenser Direct Cost	7,120	14,430
Piping Direct Cost	9,690	9,690
Total Capital Cost	16,810	24,120
MODEL PLANT 5		
Number of Nozzles	15	30
Dispenser Direct Cost	11,860	24,060
Piping Direct Cost	12,650	12,650
Total Capital Cost	24,510	36,710

TABLE 5-11. 1991 STAGE II BALANCE SYSTEM ANNUAL COST

COMPONENT	COST OF COMPONENT	
MODEL PLANT 1	SINGLE DISPENSER	MULTIPRODUCT DISPENSER
Capital Recovery Cost	701	893
Maintenance Cost	475	475
Other Indirect Costs	219	285
Recovery Credit	129	129
Total Annualized Cost	1,266	1,524
MODEL PLANT 2		
Capital Recovery Cost	939	1,555
Maintenance Cost	617	617
Other Indirect Costs	293	485
Recovery Credit	518	518
Total Annualized Cost	1,331	2,139
MODEL PLANT 3		
Capital Recovery Cost	1,668	2,313
Maintenance Cost	1,230	1,230
Other Indirect Costs	504	699
Recovery Credit	906	906
Total Annualized Cost	2,496	3,336
MODEL PLANT 4		
Capital Recovery Cost	2,297	3,298
Maintenance Cost	1,852	1,852
Other Indirect Costs	672	965
Recovery Credit	1,683	1,683
Total Annualized Cost	3,138	4,432
MODEL PLANT 5		
Capital Recovery Cost	3,455	5,175
Maintenance Cost	3,090	3,090
Other Indirect Costs	980	1,468
Recovery Credit	4,790	4,790
Total Annualized Cost	2,735	4,943

TABLE 5-12. COST EFFECTIVENESS OF 1991 STAGE II BALANCE SYSTEMS[a]

	Single Dispenser	Multiproduct Dispenser
MODEL PLANT 1		
Annualized Costs, $	1,266	1,524
Emission Reduction, Mg	0.34	0.34
Cost Effectiveness, $/Mg	3,680	4,430
MODEL PLANT 2		
Annualized Costs, $	1,331	2,139
Emission Reduction, Mg	1.0	1.0
Cost Effectiveness, $/Mg	1,290	2,070
MODEL PLANT 3		
Annualized Costs, $	2,496	3,336
Emission Reduction, Mg	1.8	1.8
Cost Effectiveness, $/Mg	1,380	1,850
MODEL PLANT 4		
Annualized Costs, $	3,138	4,432
Emission Reduction, Mg	3.4	3.4
Cost Effectiveness, $/Mg	910	1,290
MODEL PLANT 5		
Annualized Costs, $	2,735	4,943
Emission Reduction, Mg	9.7	9.7
Cost Effectiveness, $/Mg	280	510

[a] Emission reduction from Table 3-8, and assuming annual enforcement (86 percent in-use efficiency).

exempting higher cost facilities. Table 5-13 summarizes program cost effectiveness when compared to certain exemption levels. This table was calculated based upon the model plant cost effectiveness values presented in Table 5-12 and the model plant distribution values contained in Tables 2-8 and 2-10. Values are presented for facilities with either single dispensers or multiproduct dispensers, as in Table 5-12, but also an average cost that assumes equal distribution of single and multiproduct dispensers.

TABLE 5-13. PROGRAM COST EFFECTIVENESS COMPARED TO EXEMPTION LEVEL

Program Exemption Level	Program Cost Effectiveness ($/Mg)		
	Single Dispenser	Multiproduct Dispenser	Average[a]
No Exemptions	1,130	1,570	1,350
Ex < 2,000 gal/month	1,030	1,460	1,240
Ex < 10,000 gal/month	890	1,310	1,100
Ex < 10,000 gal/month Independents < 50,000 gal/month	820	1,210	1,020

[a] Average assumes equal distribution of single and multiproduct dispensers.

5.5 REFERENCES

1. Memorandum from Norton, R., Pacific Environmental Services, Inc. (PES), to Shedd, S., U.S. Environmental Protection Agency. April 29, 1991. Trip Report - New York Department of Environmental Conservation.

2. Telecon. Bowen, Elizabeth, Pacific Environmental Services, Inc. (PES) with Pratt, B., State of Missouri. May 30, 1991. Stage II Program Implementation.

3. EMCO Wheaton Price List, March 1991.

4. Telecon. Bowen, E., Pacific Environmental Services, Inc. (PES) with Holcom, C., Husky Corporation. April 30, 1991. Stage II Nozzle Costs.

5. Telecon Bowen, E., Pacific Environmental Services, Inc. (PES), with Taylor, B., OPW. May 29, 1991. Stage II Nozzle Costs.

6. Reference 3.

7. Reference 3.

8. Reference 4.

9. Draft Regulatory Impact Analysis: Proposed Refueling Emission Regulations for Gasoline-Fueled Motor Vehicles -- Volume I - Analysis of Gasoline Marketing Regulatory Strategies. U.S. Environmental Protection Agency, Office of Air Quality Planning and Standards an and Office of Mobile Sources. Publication No. EPA-450/3-87-001a. July 1987. Appendix B, Table B-15.

10. Telecon. Norwood, P., Pacific Environmental Services, Inc., with Friedman, G., EZ-flo. October 4, 1991. Stage II Equipment Costs.

11. Reference 3.

12. Fax communication to Bowen, E., Pacific Environmental Services, Inc. (PES), from Carmack, M., Catlow. May 8, 1991. Price List for Stage II Equipment.

13. Reference 9, Appendix B, Table B-2.

14. Telecon. Bowen, E., Pacific Environmental Services, Inc. (PES) with Terlizzi, L., Thermoid. April 30, 1991. Stage II Equipment Costs.

15. Telecon. Bowen, E., Pacific Environmental Services, Inc. (PES) with Whittington, G., Goodyear. May 6, 1991. Stage II Equipment Costs.

16. Fax Communication to Bowen, E., Pacific Environmental Services, Inc. (PES) from Gelle, B., Dayco. May 15, 1991. Stage II Equipment Price List.

17. Reference 12.

18. Reference 14, 15, 16.

19. Reference 13.

20. Reference 9, Appendix B, Table B-5.

21. Reference 20.

22. Reference 20.

23. Reference 20.

24. Reference 9, Appendix B, Table B-11.

25. Reference 24.

26. Memorandum from Norwood, P., Pacific Environmental Services, Inc. (PES) to Shedd, S., U.S. Environmental Protection Agency. April 30, 1991. Trip Report to California Agencies to Discuss Stage II Programs.

27. Wakim, Paul, C. J. Sample, K.A. Rooney, and D. Clemons (American Petroleum Institute). API Survey of Actual Stage II Implementation Costs In The St. Louis Metropolitan Area. American Petroleum Institute. December 2, 1988.

28. Reference 9, Appendix K.

29. Reference 9, Appendix B.

30. Reference 26.

31. Responses to Points Raised by EPA Concerning the MBS Study "Costs and Cost-Effectiveness of Stage II and Onboard Refueling Vapor Controls" (April 1987). Multinational Business Services, Inc. (MBS). October 1987.

32. Norton, R. and Scott Osbourn (Pacific Environmental Services, Inc.). Evaluation of Stage II Vehicle Refueling Control Equipment Installation Costs. Prepared for U.S. Environmental Protection Agency. November 28, 1988.

33. Reference 9.

6.0 PROGRAM IMPLEMENTATION

As discussed in Chapter 1, Stage II vapor recovery has been a part of VOC emission control in California for some time. Since the introduction of Stage II vapor recovery California in the early 70's, this program has become one of California's major VOC control strategies. Seventeen districts in California containing areas that are classified nonattainment for ozone have Stage II programs that have been in effect for over a decade. The remaining districts in California have also recently adopted regulations requiring Stage II vapor recovery for benzene control.

Other areas of the country have also established Stage II vapor recovery programs. The District of Columbia implemented a Stage II program in the early 1980s and Missouri adopted vapor recovery regulations in the St. Louis area later in the 80s. In the late 1980s and early 1990s several other States and local agencies have adopted Stage II programs. These areas include New Jersey, New York (New York City metropolitan area) Massachusetts, Pennsylvania, Washington, Oregon, and Dade County, Florida. The CAAA of 1990 require the installation of Stage II vapor recovery systems in many ozone nonattainment areas. Based on final nonattainment designations, this would affect almost 60 metropolitan areas in the United States.

The purpose of this chapter is to provide information on the planning, implementation, and enforcement of Stage II programs in other States. Incorporated into this discussion are examples of how areas with current Stage II programs handle certain situations and issues. This ranges from experience in areas such as San Diego which has almost 20 years experience with Stage II to areas such as

Massachusetts and Dade County, Florida with programs only recently adopted. Appendix F provides summaries of many of the programs in the United States. For each program, Appendix F provides a description of the program with problems encountered and recommendations for new areas based on their experience. In addition, items such as permit applications, inspection checklists, etc. are included for some of the areas in Appendices G-K. Specifically, this chapter addresses planning elements, regulations, and permitting and enforcement considerations. The EPA enforcement guidance document should be consulted for guidance on enforcement issues.

6.1 PLANNING

The planning of a Stage II program involves several considerations including the characterization of the affected industry and the estimation of environmental and economic impacts. The information contained in other chapters of this document can aid in the determination of some of these factors.

An important consideration from the outset of Stage II program planning is to work closely with other agencies that may be affected by the program. For instance, the department or agency responsible for the measurement and accuracy aspects of gasoline dispensers would probably have an interest in such a program. Other agencies that are concerned with safety aspects, such as the Occupational Safety and Health Administration (OSHA) and the Fire Marshal, will also be affected by Stage II and should be consulted. The significance of working with these types of agencies is evident in the California certification process discussed in Chapter 4. Before a Stage II system is certified, it must meet the approval of California Division of Measurement Standards, California OSHA, and the California Fire Marshal, in addition to meeting the requirements of the California Air Resources Board (CARB).

It may be beneficial to contact these types of agencies at the beginning and solicit their involvement with the Stage II program.

6.1.1 Characterization of the Affected Industry

Chapter 2 characterizes the industry affected by Stage II regulations. A service station is defined as any site where gasoline is dispensed to motor vehicle fuel tanks from stationary storage vessels. This includes public (retail) and private facilities. Miscellaneous retail outlets that are considered service stations include conventional service stations, convenience stores, mass merchandisers, marinas, parking garages, and other similar facilities which sell gasoline to the public. Private facilities include those locations where gasoline is dispensed into government agency (Federal, military, State, and local) vehicles, fleet (auto rental, utility companies, taxis, school buses, etc.) vehicles, and trucking and local service vehicles.

In order to estimate the impacts of a Stage II regulation, it is necessary to identify the number of facilities potentially affected and the volume of gasoline dispensed at these facilities.

6.1.1.1 Number of Facilities. The number of facilities can be estimated using a variety of techniques. Since most areas that will be required to install Stage II have previously been classified as nonattainment for ozone, it is likely that Stage I vapor recovery regulations exist in these areas. The Stage I permit files can be used to supply an estimate of the number of potentially affected facilities. Other possible sources of this type of information are records pertaining to underground storage tanks, Department of Weights and Measures, tax records, local fire departments or even phone directories.

In the absence of actual records or data, local or State trade organizations could be contacted. Also, information such as the survey completed by NPN discussed in Chapter 2 provides retail service station numbers on a State

basis. These could be used and adjusted to a smaller geographic area using a factor such as population or gasoline throughput.

6.1.1.2 Area Gasoline Throughput. The combination of the area gasoline throughput and the emission factors discussed in Chapter 3 will provide an estimate of the uncontrolled emissions from vehicle refueling. If gasoline taxes are imposed in the study area, records relating to gasoline sales should be available at the tax office. If the study area entails an entire State, NPN annually estimates gasoline consumption on a State basis. Gasoline consumption and methods of estimating gasoline consumption on a county level are also discussed in Chapter 2.

6.1.1.3 Size Distribution of Facilities. The distribution of facilities by throughput and according to the number of nozzles is important. Ideally, an agency could obtain detailed information regarding the number of service stations, the associated gasoline throughput, and the number of nozzles. However, in the absence of the resources necessary to develop such a database, it is possible to draw comparisons between the areas covered by the Lundberg data discussed in Chapter 2 and summarized in Appendix A and the agency's regulated area. The data can be used to estimate size distributions for counties in designated population ranges or with a known number of service stations. For example, if a county's population is approximately 50,000, the counties of Union, Hudson, and Monmouth, New Jersey could be selected from Appendix A as counties with comparable populations. The size distributions of these three counties could then be averaged to predict a size distribution for the study area county.

Model plants could then be developed which include the number of nozzles and gasoline throughput. Alternatively, the model plants provided in Chapter 2 may be used. The distribution of facilities could be applied to the model

plants to estimate the number of facilities represented by each model plant.

6.1.2 Estimation of Impacts

The population and distribution of facilities, gasoline consumption, individual facility costs, and planned enforcement levels are used to predict environmental and economic impacts.

6.1.2.1 Environmental Impacts. The emission reductions anticipated from the regulation may be estimated by calculating the uncontrolled emissions and multiplying these emissions by the expected overall effectiveness for the program. The uncontrolled emissions can be calculated by multiplying the gasoline throughput by the uncontrolled emission factor discussed in Chapter 3. The overall, or in-use, effectiveness may be estimated according to the expected level of effort which the agency plans to have available for the program. In-use effectiveness is discussed in detail in Chapter 4.

In order to evaluate the impacts associated with exemption levels, the throughput for the number of facilities in model plants that fall below the anticipated exemption cutoff should not be multiplied by the selected control level or use the Stage II program efficiencies shown in Chapter 4 with exemption levels already assumed.

6.1.2.2 Economic Impacts. Costs initially must be estimated on a facility basis. The agency may choose to gather information specific to their area regarding installation, equipment, and maintenance costs for these systems. If resources are not available for such a detailed analysis, Chapter 5 discussed costs of Stage II with model plant costs. Model plant costs may then be multiplied by the number of facilities assigned for each model plant to estimate the total area impacts.

The overall cost in relation to the emission reduction, or cost effectiveness, may then be calculated by dividing the overall cost by the overall emission reduction. Since

the cost effectiveness for smaller facilities is higher due to the lower gasoline throughput and resulting lower emission reduction and recovery credit, cost effectiveness is often used to define exemption levels for these smaller facilities.

6.1.3 Public Awareness

Public acceptance is vital to the success of any Stage II program. The slight variations in the operation of Stage II equipment can annoy uninformed customers and lead to improper use possibly reducing efficiency and the incorrect conclusion that the equipment is faulty. Therefore, an agency should consider ways to inform and educate the public about the Stage II program. Many regulations require that operating instructions be placed at the pump. This is perhaps the simplest and most straightforward method of providing the public information about the operation of Stage II equipment.

Another method used, especially in California, is a toll free complaint number. The number is placed on the pump with the operating instructions and is specifically for Stage II complaints. California officials have indicated that in the earlier periods of Stage II, these lines were used by the public often to express discontent with Stage II. However, as the public has become more aware of the equipment, the complaint lines have evolved into a form of public compliance program, where persons call in with reports of faulty or missing equipment.

In addition to the operating instructions and telephone number, the agency can develop a public awareness program. The publication and distribution of brochures, pamphlets, fact sheets, etc. is a manner of providing information to the public. Such a pamphlet from Massachusetts is provided in Appendix G-1. The use of the media to describe Stage II has been used successfully in California. Television, radio, and newspaper spots have described the environmental

and personal health benefits associated with Stage II and an explanation of operating procedures.

While these public awareness measures are important to gain acceptance of Stage II, service station employee awareness and education may have a more significant impact on reducing emissions. It is extremely helpful if these employees are knowledgeable of the operation and maintenance requirements of Stage II equipment. There are several ways that an agency can promote this. They can provide workshops, training courses, etc. for service station employees that discuss Stage II equipment, regulations, and inspection procedures. The agency could also promote self-inspection programs that encourage station employees to conduct periodic equipment inspections to ensure that the equipment is in proper condition. Appendix G-2 contains a self inspection handbook published by the California Air Resources Board that is provided to station owners. An informed and conscientious service station employee population will decrease the enforcement effort needed and the excess emissions from vehicle refueling.

6.2 REGULATIONS

Development of appropriate rules is necessary in order to satisfy the intent of the program and determine individual facility compliance. As with any regulation, Stage II regulations should be clearly written and specific. The rules should contain definitions; requirements for the equipment installation, operation, and maintenance; exemptions levels; compliance schedules; and testing and recordkeeping requirements. Many Stage II regulations also require that operating instructions be posted at the pumps. Copies of many current Stage II regulations are contained in Appendix H.

6.2.1 Equipment Requirements

Most current Stage II regulations contain a statement that prohibits gasoline refueling without a certified or

approved Stage II system. Common language for this requirement is "No owner or operator shall transfer, permit the transfer, or provide equipment for the transfer of gasoline from a stationary storage tank at a service station into a motor vehicle fuel tank unless an approved Stage II vapor recovery system with 95 percent or greater efficiency is installed and used during the transfer."

This language brings to light an important point, the definition of an "approved Stage II vapor recovery system." An "approved Stage II vapor recovery system" is defined in various ways but in all current situations is directly or indirectly linked to certification by the California Air Resources Board that the system controls VOC emissions with 95 percent efficiency. In California, an approved system is any CARB certified system. CARB certification and Executive Orders are discussed in Chapter 4. In addition, Appendix C contains the certification testing procedures and Appendix D addresses Executive Orders. Most States and local agencies automatically approve, or certify, Stage II systems that have been certified by CARB. EPA is not aware of any State or local agency that has conducted testing and certified Stage II equipment which has not been previously CARB certified. However, most regulations outside of California do allow the possibility of non-CARB certification, although no specific test methods or procedures are identified.

While the universe of certified equipment in non-California areas has not been broadened to include equipment not CARB certified, many areas are limiting the approved equipment from the complete list that is currently certified by CARB. For instance, both Massachusetts[1] and Dade County, Florida[2] allow only coaxial hoses. Dade County permits only the most recent generation of nozzles and other equipment. These are options available to a beginning program that can reduce the confusion as to what is "approved", as well as ensuring use of the prevailing technology. In fact, CARB

representatives have indicated that they feel this is a sound approach for new programs.[3]

In all circumstances, it is important that both industry and inspectors be completely aware of those systems and equipment which are approved and acceptable for an area. Even if an agency accepts CARB certification to determine approvable systems, it can maintain an up-to-date listing available to all parties that clearly specifies the permissible equipment and combinations of components. This is generally the approach being taken by the New York State agency.[4]

6.2.2 Exemption Levels

The CAAA of 1990 require that gasoline dispensing facilities with more than 10,000 gallons of gasoline throughput per month (50,000 gallons per month in the case of an independent small business marketer) install Stage II. Therefore, by legislative mandate, the maximum exemption levels which a State or local agency may adopt are clearly defined. However, there are several variations that may be incorporated.

Due to the difficulty of determining the stations that fall under the definition of "independent small business marketer", many areas choose not to have a separate exemption level for this group. This is allowed under the Clean Air Act, as discussed in Chapter 1. In fact, presently no agency exempts independent marketers at a different throughput level from the remainder of the service station population. Many areas choose not to have any exemption level at all and require that all gasoline dispensing facilities install Stage II equipment.

Pennsylvania's Stage II regulations contain an additional exemption requirement. Initially, all stations with monthly throughputs of 10,000 gallons per month or more are required to install Stage II equipment. In addition, whenever a station, regardless of throughput, is constructed or modified it is required that Stage II equipment be

installed. Massachusetts' regulations also contain similar requirements. This eliminates a large portion of the installation cost and lessens the impacts on smaller stations.

It is important that the regulation include specific stipulations and procedures to verify exemption status. As the CAAA specify exemptions based on gasoline sales, or throughput, it is anticipated that most regulatory agencies will follow this example, although Missouri's Stage II regulations contain an exemption level related to storage tank capacity (2,000 gallons for agricultural usage).

Agencies with Stage II vapor recovery programs have indicated that problems exist with the verification of facility throughput and, thus, the identification of exempt facilities. One approach is to shift the burden of proof from the agency to the facility. The Bay Area Air Quality Management District (Bay Area) regulations make it apparent that the burden of proof lies with the facility. The regulation states that "the burden of proof of eligibility for exemption from this rule is on the applicant. Persons seeking such an exemption shall maintain adequate records and furnish them to the Air Pollution Control Officer (APCO) upon request." This allows the agency to evaluate not only the throughput data but the adequacy of the data provided.

This situation can also be avoided by specifying procedures for keeping records and determining throughput. For instance, New York's regulation states, "The sum of all gasoline deliveries to a gasoline dispensing site during the previous 12 consecutive months will be used to determine whether the requirements of section 230.2 of this Part apply. Once a gasoline-dispensing site becomes subject to the requirements of section 230.2 because its annual gasoline throughput exceeds an applicability level, subsequent decreases in gasoline deliveries or throughput do not excuse a source owner from having to maintain the effectiveness of the stage I and/or stage II equipment."

6.2.3 Compliance Schedules

The CAAA of 1990 contain specific provisions related to compliance dates. Section 182(e)(3) states that within 2 years from the enactment of the CAAA of 1990, States must "submit a revision to the applicable implementation plan to require all owners or operators of gasoline dispensing systems to install and operate ... a system for gasoline vapor recovery of emissions from the fueling of motor vehicles." It also designates compliance dates as follows:

> (i) 6 months after the adoption date, in the case of gasoline dispensing facilities for which construction commenced after the date of the enactment of the Clean Air Act Amendments of 1990;
>
> (ii) one year after the adoption date, in the case of gasoline dispensing facilities which dispense at least 100,000 gallons of gasoline per month, based on average monthly sales for the 2-year period before the adoption date; or
>
> (iii) 2 years after the adoption date, in the case of all other gasoline dispensing facilities.
>
> Any gasoline dispensing facility described under both clause (i) and clause (ii) shall meet the requirements of clause (i).

The determination of an appropriate and realistic compliance schedule within the CAAA requirements involves the study of many factors. The schedule for installation of Stage II equipment should allow sufficient time for facilities to plan for their needs, as well as alleviating any contractor shortages and potential premium charges. In most instances, the compliance schedule is multi-phase, with facilities with larger gasoline throughputs required to install the Stage II equipment in the initial phase and the smaller stations following. This originally would affect the larger oil companies and jobbers, and help to avoid competition between these facilities and smaller businesses for contractors. This method also affects a larger percentage of the gasoline throughput in the shortest time frame. Under Section 325 of the CAAA, of 1977 a three year

phase-in for independent small business marketers is provided.

In determining whether a compliance schedule is reasonable, the major issues to investigate are: (1) the number of contractors in an area; (2) the number of service stations in each cutoff classification; and (3) the equipment availability due to other areas in the region or country that are simultaneously requiring the installation of Stage II systems. Table 6-1 summarizes the exemption levels and compliance schedules of various Stage II programs.

6.2.4 Recordkeeping Requirements

The most common recordkeeping requirement pertains to gasoline sales or throughput. In many instances, throughput is determined by keeping records on the amount of gasoline delivered to the site, although the CAAA of 1990 specify exemptions based on gasoline sales. It is appropriate that records be kept for either, or both, deliveries and sales. An additional check of gasoline sales could be obtained from tax records, or the facility could be required to obtain and keep this tax information on-site along with the facility generated data. It is also possible that recordkeeping requirements could be added as permit conditions. Some areas have a recordkeeping requirement that results of installation tests be kept on site. These tests are discussed in detail in Section 6.3.3.

6.3 PERMITTING

Permits are a tool that local air pollution control agencies can use in getting Stage II vapor recovery control systems installed properly. The permits and permit conditions should be clearly written to avoid confusion on the part of the owner/operator of the facility and to enhance enforcement efforts. Several aspects of permitting are discussed in more detail in the following sections, including the identification of sources, permit forms and

TABLE 6-1. SUMMARY OF STAGE II PROGRAM EXEMPTION LEVELS AND COMPLIANCE SCHEDULES

(As of June 1991)

State/Regulatory Agency	Covered Area	Exemption Levels	Compliance Schedule
California*			
Bay Area AQMD	San Francisco area	- Storage tanks with capacity < 260 gal. and used for "implements of husbandry"	The Bay Area District has had Stage II requirements since the 1970s
		- Where the District determines that Stage II is not feasible	
		- Vehicle to vehicle refueling	
		- Facilities that exclusively fuel motor vehicle tanks < 5 gallons	
		- Facilities that exclusively fuel aircraft	
		- Facilities with ≤ 60,000 per year throughput where Stage II was not installed before July 1, 1983	
South Coast AQMD	Los Angeles area	- Facilities with 75 percent of throughput for fueling implements of husbandry	The South Coast District has had Stage II requirements since the 1970s
San Diego APCD	San Diego area	- Retail stations with storage tanks less than 260 gallons	The San Diego District has had Stage II requirements since the 1970s
		- Nonretail stations with storage tanks less than 550 gallons	
		- Nonretail stations with less than 2,000 gallon per month throughput for the facility	
		- Dispensing from any intermediate refueler	
		- Dispensing of natural gas or propane when not mixed with another VOC	
		- Into vehicles performing emergency work	
		- Storage tanks used primarily for the fueling of aircraft or boats	

TABLE 6-1. SUMMARY OF STAGE II PROGRAM EXEMPTION LEVELS AND COMPLIANCE SCHEDULES (CONTINUED)

State/Regulatory Agency	Covered Area	Exemption Levels	Compliance Schedule
District of Columbia	Washington, D.C.	- All dispensing facilities available to the general public by virtue of having military status having 3 or less dispensing nozzles	In accordance with the DC Air Pollution Control Act of 1984
Missouri	St. Louis area	- Stationary storage tanks having a capacity < 2,000 gallons and used for fueling "implements of husbandry" - Stationary storage tanks having a capacity < 2,000 gallons installed before September 15, 1976	Final compliance date for all sources was December 31, 1987.
New Jersey DEP	Entire State	- < 10,000 gallons/month - Dispensing devices at a marina used exclusively for marine vehicles	December 30, 1988 for facilities > 40,000 gal/month and December 29, 1989 for facilities > 10,000 gal/month
New York DEC	New York City area	- Site specific determination that Stage II is technically or economically infeasible	July 1, 1988 for facilities > 500,000 gal/year and July 1, 1989 for facilities > 250,000 gal/year

TABLE 6-1. SUMMARY OF STAGE II PROGRAM EXEMPTION LEVELS AND COMPLIANCE SCHEDULES (CONTINUED)

State/Regulatory Agency	Covered Area	Exemption Levels	Compliance Schedule
Massachusetts DEM	Entire State	- < 20,000 gal/month constructed or modified before November 1, 1989	April 1, 1991 for facilities > 1,000,000 gal/year; April 1, 1991 for facilities > 500,000 gal/year; and April 1, 1993 for facilities > 20,000 gal/month
Florida/Dade County DEP	Miami area (Dade County)	- Marinas servicing boats	Immediataly for new facilities and December 14, 1992 for existing facilities
		- Airports servicing airplanes	
		- Established stations < 10,000 gal/month	
Pennsylvania DEM	Philadelphia area	- < 10,000 gal/month constructed or modified before June 25, 1990	June 25, 1991 for facilities > 1,500,000 gal/year; December 25, 1991 for facilities > 1,000,000 gal/year; June 25, 1992 for facilities > 500,000 gal/year; and June 25, 1993 for facilities > 10,000 gal/month

* All local districts in California have responsibility for Stage II (Phase II) programs. The Bay Area, South Coast, and San Diego districts shown in the Table and 14 other districts that are nonattainment for ozone have had Stage II regulations for over a decade. The remaining districts required Stage II be installed for benzene control by 1991. While the model regulation provided by CARB (see Appendix F.1) suggested a throughput cutoff of 480,000 gallons per year (40,000 gallons per month), the Districts implemented a variety of cutoffs ranging from no exemptions to this 480,000 gal/year level. These Districts are discussed in Appendix E as they are those with the most experience with Stage II.

applications, the issuance of operating permits, and testing requirements. Appendix I contains information related to permitting.

6.3.1 Identification of Sources

While estimates of the number of facilities may be obtained from a variety of sources as discussed in Section 6.1, the actual identification of sources to be contacted for permitting purposes can be difficult. An analysis of the methods used for this identification process by agencies with the newest Stage II programs reveals several approaches.

Stage I permit records can be of great assistance in this identification. New Jersey[5] and Dade County, Florida[6] relied on these files. New Jersey sent a letter to all facilities in the Stage I permit system and informed them that they were required to obtain a Stage II permit and install the equipment. Dade County also used information from their underground storage tank permitting program to complement the Stage I data.

Pennsylvania identified sources by contacting major oil companies and obtaining information from the State Department of Licensing and Inspection.[7] Massachusetts used tax records to identify sources. Each source was then sent a Registration and Classification form which was returned to the Agency, who contacted the facilities which needed a permit.[8]

6.3.2 Permit Forms and Applications

The permit form and application is the best means of obtaining information regarding a facility and the type of equipment to be installed. The forms should be designed to allow the department to easily obtain the important information without requiring a great deal of excess data. An obvious requirement for the permit application is the name and address of the facility. However, in addition to this information it is beneficial to include the name and address of the business owner, the operator/lessee, and a

site contact. The nature and purpose of the application should be stated. Station characteristics such as the operating schedule, monthly and annual throughput, and number of nozzles, hoses, and dispensers should be provided. Information pertaining to the type of Stage II system to be installed should also be included. Specifically, this should consist of the equipment to be installed; a preliminary site plan of all tanks, dispensers, and underground piping. Most current Stage II permit forms require that the CARB Executive Order number be identified for the system to be installed, regardless of the area of the country.

While most of the permit forms and application requirements are similar, the procedures vary immensely after the submission of the application. Due to resource restraints, each air pollution agency must determine the focus of their Stage II program. Invariably, programs are concentrated either on permitting or inspections. Therefore, the criteria for the issuance of operating permits can range from a paperwork type exercise, with emphasis on inspections, to permitting requirements based on stringent testing.

The New Jersey DEP receives the application; checks to confirm that all information is complete and that the facility has designated a certified system for installation, and mails out a permit. The permit contains standard conditions that leak and pressure decay/liquid blockage tests must be performed on the system after installation and that the facility must maintain verification of the tests. The existence of this documentation is checked during facility inspections.[9]

Massachusetts has developed a two-phase compliance approach. The first phase involves verification that the appropriate equipment has been installed. This initial field inspection is described as a "drive by" screening that defines a minimum level of inspection required to assure

that installation has occurred. The second phase is the more detailed verification that the equipment is operational and is being maintained.[10]

The San Diego Air Pollution Control District has perhaps the most stringent permitting and testing program observed in the country. The program is based on the experience and knowledge that most emissions from Stage II equipment are a result of improperly installed systems. The following is a description of the permitting and testing program in San Diego.[11]

An applicant submits an application for a Stage II permit that contains a preliminary site plan of all tanks, dispensers, and underground piping. The application is reviewed in detail by a member of the engineering staff to confirm that the planned system is in accordance with CARB certification and San Diego regulations. If all the preliminary requirements are met, the District grants Authority to Construct. This Authority to Construct is issued subject to several requirements. An example is the applicant must notify the District within 10 working days after the Stage II installation that construction has been completed. Temporary authorization to operate begins only after receipt by the District of this notice of completion and an "as built" site plan.

The applicant must also have several tests performed and provide the District with the results. The District must be contacted within 10 working days of completion of construction to establish a mutually agreeable test date. Normally, the tests are witnessed by a District representative. If the District is not notified of a test, then this test may be declared invalid, in which case a retest is required. The required tests are: (1) a pressure decay/leak test of vapor control system; (2) a pressure drop vs. flow test from each nozzle to its associated underground tank; (3) a liquid test of all vapor piping to ensure adequate line slope and liquid drainage; (4) a tank vapor

space tie test to verify the existence of a tank interconnect vapor pipe; and (5) a maximum dispensing flow rate determination for at least one nozzle. Each of these tests is discussed in the following section.

The temporary authorization to operate remains in effect, unless canceled, until the facility is inspected by the District for a Permit to Operate. If the facility passes inspection, written authorization is given for continued operation, which is followed by issuance of the Permit to Operate. The above tests are required to be repeated if the Stage II piping or equipment is changed in any way.

6.3.3 Testing Requirements

While efficiency testing is not practical for each service station, there are tests that indicate improper installation of underground Stage II vapor piping. These tests are the pressure decay/leak test, the dynamic back-pressure test, and the liquid blockage test. Testing requirements are usually included as a permit condition but could be specified in the regulation. Various test methods are contained in Appendix J.

6.3.3.1 Pressure Decay/Leak Test. This test procedure is used to quantify the vapor tightness of any vapor recovery system installed at a gasoline dispensing facility. Leaks in a balance system can cause excessive vapor emissions. Leaks in an assist system can decrease the efficiency of the vapor collection or processing system, or cause the pumps and the incinerator to operate continuously while attempting to maintain pressure or vacuum.

The test is conducted by capping the vent pipe(s) and pressurizing the vapor piping system with nitrogen. This pressurization can be accomplished by introducing nitrogen into the vapor passage at one nozzle but is commonly done at the riser in the dispenser. An initial pressure of 10 inches water column is obtained and the final pressure in the system is recorded after a period of 5 minutes. The

final pressure is compared to minimum requirements linked to the ullage space in the tank. Example test procedures of this type are contained in Appendix J, Sections J.1 and J.5.

6.3.3.2 Dynamic Pressure Drop Test. This test is used to determine the pressure drop (flow resistance) through balance vapor recovery systems (including nozzles, vapor hose, swivels, dispenser piping, and underground piping) at prescribed flow rates. The test method consists of flowing gaseous nitrogen through a calibrated test panel into the vapor recovery system at different flow rates to simulate the back pressure created during vehicle refueling. The resulting backpressures are measured near the nozzle faceplate using a pressure gauge, and compared with CARB certification criteria. The system passes this test if, at the nitrogen flow rates of 20, 60, and 100 SCFH, the flow resistance measured does not exceed 0.15, 0.45, and 0.95 inches of water, respectively. This test should be run on every nozzle because nozzles, hoses, and dispenser connections can cause excessive backpressure. However, in the event of limited resources to run this number of tests, the proper approach would be to run this test at a minimum of the farthest dispenser from the underground tanks for each product grade. The test procedures in Appendices J.2 and J.4 are for this test.

6.3.3.3 Liquid Blockage Test. This test is used for balance and assist systems to determine if the piping configuration is correct and to detect low points in the piping where the accumulation of liquid condensate may cause blockages which restrict the flow of vapors and thus decrease the system's vapor collection efficiency. The test method consists of introducing gasoline into the vapor piping at any point up to and including the riser. When adequate time has been allowed for the gasoline to flow back to the underground tank, gaseous nitrogen is introduced into the vapor piping at the three flow rates of 20, 60, and 100 SCFH. A liquid blockage is indicated either by the needle

pegging on the pressure gauge and/or wild pulsing of the needle, or a reading in excess of the limits discussed above using the dynamic pressure drop test apparatus. This test is conducted using the same test methods contained in Appendices J.2 and J.4.

6.3.3.4 Vapor Space Tie Test. An addition to the leak test/pressure decay procedure discussed above allows the determination of whether all underground tanks are plumbed into the system. After the pressure drop has been measured for the specified time period, the dry break on each underground tank fillpipe is depressed. If the tank is properly tied to the vapor system, a release of pressure will occur. The absence of pressure in the tank indicates that the tank is not connected to the vapor piping.

6.3.3.5 Maximum Dispensing Flow Rate Determination. The dispensing flow rate may be checked by simply noting the volume of gasoline pumped in a specific time interval. This can be done during the fueling of any vehicle. This test procedure is contained in Appendix J.3.

6.3.3.6 Liquid Removal Device Test. In addition to the tests required in San Diego, there is also a mass draft test method to check liquid removal devices in the hoses. This test can be performed to check the operation of this device. It is conducted by introducing sufficient gasoline into the vapor passage of the coaxial hose to produce a dynamic back-pressure between 2.0 and 6.0 inches water column. This is accomplished with approximately 150 ml of gasoline. Then approximately 10 gallons of gasoline are dispensed into a vehicle fuel tank. The liquid remaining in the vapor passage is then drained and the volume is measured. If the device is operating properly, most of the gasoline should be removed from the vapor passage during this fuel dispensing.

6.4 INSPECTIONS

The emphasis of most Stage II programs is on the inspection program. The utilization of approved or certified equipment and the maintenance of this equipment is essential to the effectiveness of a Stage II vapor recovery program. Therefore inspection procedures and frequency, inspector training, and the method of handling violations are enforcement related matters that need serious consideration. Unfortunately, most inspection programs concentrate on the above ground portion of Stage II systems, with little or no attention given to the underground piping. Testing procedures can also be incorporated into the inspection program.

6.4.1 Inspection Checklists and Procedures

Detailed inspection procedures and checklists are helpful in the development and implementation of a consistent and equitable enforcement program. All of the standard agency pre- and post-inspection procedures such as identification of the purpose of the inspection and consultation with the owner/operator after the inspection should be followed. In addition, procedures specific to the inspection of Stage II equipment can be developed. The Compliance Assistance Program of CARB publishes a Technical Manual for Inspectors of Gasoline Vapor Recovery systems.[12] The inspection procedures shown in Table 6-2 are taken from this document, and describe step-by-step instructions for inspecting Stage II equipment at a gasoline dispensing facility. Also, Appendix K contains various inspection checklists and inspection procedures from other areas.

6.4.2 Inspection Frequency

The inspection frequency also varies among different agencies. The inspection frequency is a direct reflection of the resources allocated for a Stage II program. The frequency ranges from one inspection per facility every 5 years to two or three annual inspections per facility. There is a correlation between inspection frequency and the

TABLE 6-2. PHASE II INSPECTION PROCEDURES

1. Fueling instructions:

   a. See that fueling instructions are clearly displayed with the appropriate toll free number.

2. Nozzles:

   a. Check each nozzle to verify that it is a current CARB certified model.

   b. Verify that each nozzle is installed in accordance with ARB Executive Orders.

   c. Check to see that required nozzle components are in place and in good condition. Check:

      1) required nozzle components (See 401.3.1).
      2) automatic shut-off mechanism (observe the filling of vehicles look for signs of spillage.
      3) trigger (is it leaking or broken)
      4) spout for damage or looseness (wiggle the spout)
      5) leaded nozzle or spout to ensure that it has not been replaced an unleaded nozzle or spout (check the diameter).
      6) nozzle for leaking gasoline or vapor (tip the nozzle down into a container and look for vapors).

3. Faceplate:

   a. Make sure that the faceplate is smooth, uniform, and capable of forming a tight seal for balance system and in good working order for assist systems.

4. Bellows:

   a. Stretch the bellows to check for holes, rips, or tears.

   b. Check to see that the bellows is securely attached to the nozzle.

   c. Check to see that the shape of the bellows is normal and that there are no deformities.

5. Spring:

   a. Check to see that the internal bellows spring is not missing, broken, distorted, welded, or homemade. Many of the newer balance systems do not require the internal spring.

TABLE 6-2. PHASE II INSPECTION PROCEDURES (CONTINUED)

6. Latch:

   a. Check to see that the latching device is not missing, broken, distorted, welded, or homemade.

NOTE

Neither the spring nor the latching device is required on the Hasstech system, but either may be present. Both the spring and latching device are required on the Hirt system. The Amoco bellowless nozzle incorporates a tightly wound spring around the spout as a latching device.

7. Check valve:

   a. See that the check valve is in place (inspect the nozzle for sign of tampering)

8. Hoses:

   a. Only coaxial vapor recovery nozzles and hoses may be installed on balance systems after February 20, 1986. Hose configurations must be in compliance with the exhibits in the most current version of executive order G-70-52.

   b. Check to see that product and vapor hoses with the overhead retractor are long enough to permit natural drainage into vapor return piping when the retractor is in the retracted position, but still avoid kinking when fully extended.

   c. Check to see that hoses with retractors are adjusted to maintain a proper loop, and that the bottom of the loop is within the distance from the island surface certified by the ARB Executive Order for that particular dispenser configuration.

   d. Check to see that hoses are not torn, flattened or crimped.

   e. See that the vapor recovery hoses are of the required size and length.

   f. If liquid removal device is required, check to see that it is properly installed.

TABLE 6-2. PHASE II INSPECTION PROCEDURES (CONTINUED)

9. Flow Limiter:

   a. If required, open the dispenser (get the key from the owner or operator) and check to see that the flow limiter indicator arrow is pointing in the same direction as the flow of gasoline and that the flow limiter is not missing.

10. Swivels:

   a. Nozzle and dispenser swivels are optional with the lightweight coaxial hoses for many configurations. Check the appropriate executive order to see what swivels are required.

   b. Check to see that swivels are lubricated to maintain power movement (look for full movement).

   c. Check to see that swivels are not missing, defective, or leaking.

   d. Check to see that the dispenser end swivels are Fire Marshal approved. (look for the Fire Marshal sticker).

11. Vent Pipes Pressure Relief Valve

   a. Observe to see that the valve is in place if required for a vacuum assist system.

12. Vacuum Pump (Amoco Bellowless System Only)

   a. Wait for a vehicle to fuel.

   b. Verify that fuel is being dispensed into the vehicle by checking the flow meter on the dispenser. Listen toward the top of the dispenser for a rapid "clicking" sound of the vapor pump. The "clicking" is caused by the movement of the pump seals as they rotate within the pump housings. Clicking sounds indicate that the pump is working properly.

13. Collection Unit (Hasstech Only):

   a. Wait for a vehicle to fuel.

TABLE 6-2. PHASE II INSPECTION PROCEDURES (CONTINUED)

b. Go to the collection unit and listen for the sound of the vacuum/blower inside the collection unit. If the collection unit does not appear to be operating, check to see that the power switch is ON. If the switch is ON and the collection unit is still operating, check the control panel.

14. Control Panel (Hirt system only)

a. Check to see that the power switch is in the on position.

b. Check to see that both the power and vacuum lamps are illuminated.

If power lamp is out:

1) Check to see that the on/off switch if on.

2) Check to see that the circuit breakers in the main electrical panel box are on.

If the vacuum lamp is out:

1) switch the vacuum and power lamp bulbs to verify that the vacuum lamp is not burned out.

2) check to see that all fill caps and Phase I vapor recovery connections are on and are tightly sealed.

15. Processing Unit:

a. Look for convection currents coming out of the burner stack on top of the processing unit, indicating that the burner is operating (the burner will not be operating at all times). You may be able to see these currents more easily by standing back and observing the top of the stack against a background (such as power lines) or by looking for the shadows on the ground.

16. Vacuum gauge (Hirt Only):

If the vacuum pump is illuminated, there is no need to check the vacuum gauge. If the vacuum lamp is not illuminated, a check of the vacuum gauge is needed.

TABLE 6-2. PHASE II INSPECTION PROCEDURES (CONTINUED)

The vacuum gauge may be found inside the base of the dispenser furthest from the vent risers.

a. If the gauge reads zero or negative during dispensing and non-dispensing, the system is operating okay.

b. If the gauge reads positive during non-dispensing or pegs to positive during dispensing, the system needs attention.

Source: CARB Technical Manual for Gasoline Facilities; Phase I and II, CARB Compliance Assistance Program.

number of defects found, although there are other relevant factors.

San Diego inspects private facilities once per year and two or three times per year for retail service stations.[13] The retail facilities in the Bay Area are inspected twice per year and the private facilities once per year.[14] In the South Coast District, they strive to average two inspections per year per facility. However, their inspection program is not geared to inspect each station twice annually, but rather is a priority inspection program. Stations which have exhibited recurrent problems in the past are inspected three times per year, average situations twice per year, and very conscientious stations are inspected only once per year. Also, South Coast is experimenting with a "self inspection" program in which larger companies implement their own inspection program and report to the District. Preliminary assessments are encouraging, but an overall evaluation of this program has not been conducted.[15]

6.4.3 Inspector Training

The level of training for Stage II inspectors also varies widely. It is critical that inspectors understand Stage II technology fully to be able to recognize violations and potential problems. While segments of the inspection procedures are relatively simple, such as the identification of torn bellows and hoses, items such as proper check valve function and the identification of properly certified equipment cannot be grasped in a short training program.

Inspector training ranges from agencies that provide a 2-4 hour discussion which includes a video of inspection procedures to those which have a training program that lasts up to 7 weeks The Evaluation and Training Section of CARB has a series of training courses for inspectors. Generally, inspectors attend a 2-day training course that includes detailed discussion of equipment technology, CARB certification procedures and Executive Orders, inspection techniques, test procedures, and a hands-on section in the field. CARB believes that this 2-day workshop/training event could easily be 3 or more days to

adequately cover the necessary material.[16] The South Coast District has a 7-week district training program which includes working with an experienced inspector for 2 weeks. They also have training videos on inspection techniques.[17]

There are currently two videos used most often by State and local agencies. These are "Stage II Controls", by Multinational Business Services (MBS) in Washington D.C. and "For Cleaner Air: Vapor Recovery" by CARB.

6.4.4 Testing During Inspection

As mentioned previously, Stage II inspections often focus entirely on the above ground portion of the system. The inspection procedures taken from the CARB technical manual that are cited above include no mention of underground piping testing. However, the pressure vs. flow and liquid blockage tests can be conducted by inspectors in the field with minimal time and effort, and they can provide an idea of the condition of the underground piping. As discussed in Chapter 4, liquid blockages can severely inhibit the emission reduction from Stage II systems even when all nozzles, hoses, and above ground equipment are well maintained. This testing during inspections is especially critical for programs that do not require testing during the permitting process.

The Bay Area District has testing units available for use by their inspectors. Tests are conducted on a random type basis during normal inspections and in response to complaints that seem to indicate liquid blockage type problems.[18] Without exception, every California official with knowledge and experience in Stage II technology interviewed by EPA indicated that the testing of the underground piping for leakage and liquid blockage is possibly the most important aspect of the functioning of Stage II systems.[19]

6.4.5 Violations

There are two basic methods used for handling Stage II violations. These are removing (i.e., tagging out) defective equipment from service and administrative penalties for

violations. Following is a summary of the mandated procedure that must be followed by all agencies in California.[20]

When a district inspector determines that a component contains a defect which substantially impairs the effectiveness of the system in reducing air contaminants, the district marks the component "Out of Order". The use of the component is then prohibited until the component has been repaired, replaced, or adjusted, as necessary, and the district has reinspected the component or has authorized use of the component pending reinspection.

Equipment defects which are considered in California to "substantially impair the effectiveness of the systems in reducing air contaminants" are:

(a) Absence or disconnection of any component required to be used in the Executive Order(s) that certified the system.

(b) A vapor hose which is crimped or flattened such that the vapor passage is blocked, or the pressure drop through the vapor hose exceeds by a factor of two or more the requirements in the system certified in the Executive Order(s) applicable to the system.

(c) A nozzle boot which is torn in one or more of the following manners:

1. Triangular-shaped or similar tear 1/2 inch or more to a side, or hole 1/2 inch or more in length.

2. Slit 1 inch or more in length.

(d) Faceplate or flexible cone which is damaged in the following manner:

1. For balance nozzles and for nozzles for aspirator and educator assist type systems, damage shall be such that the capability to achieve a seal with a fill pipe interface is affected for 1/4 of the circumference of the faceplate (accumulated).

2. For nozzles for vacuum assist-type systems, more than 1/4 of the flexible cone missing.

(e) Nozzle shutoff mechanisms which malfunction in any manner.

(f) Vapor return lines, including such components as swivels, antirecirculation valves and underground piping, which malfunction or are blocked, or restricted such that pressure drop through the lines exceeds by a factor of two or more requirements specified in the Executive Order(s) that certified the system.

(g) Vapor processing unit which is inoperative.

(h) Vacuum producing device which is inoperative.

(i) Pressure/vacuum relief valves, vapor check valves, or dry beaks which are inoperative.

(j) Any equipment defect which is identified in an Executive Order certifying a system pursuant to the Certification Procedures incorporated in Section 94001 of Title 17, California Code of regulations, as substantially impairing the effectiveness of the system in reducing air contaminants.

Where a district inspector determines that a component is not in good working order but does not contain a defect listed above, the district provides the operator with a notice specifying the defect. The owner/operator then must correct the defect within 7 days or be subject to further action.

Each district in California follows this procedure, although the imposition of administrative penalties, or fines, varies from district to district. San Diego assesses a fine for all defects detected, while other districts impose fines if a certain percentage of defects is found relative to the number of nozzles, or if a set number of violations is found.[21]

California officials note that in some situations this tag out program has tended to be abused by industry. An extreme example is the station owner that recognizes equipment is defective but waits until the inspector tags it out of service, then immediately replaces it with a new component. A suggestion from California officials is that any inspection program should be evaluated carefully to avoid creating the situation where the inspectors are in effect performing the maintenance program for the service stations. This can be avoided by making the penalties substantial enough to ensure that the owner will want

to find these defects instead of waiting for the inspector to locate them.[22]

Other areas impose rather severe fines for any violation noted by the inspector. In New Jersey, no definition of malfunctioning or defective equipment is given and much is left to the discretion of the inspector in this regard. Any defect noted by an inspector is subject to a fine.[23]

A mixture of these approaches is being implemented by Massachusetts. The State requires that the facility tag out their own equipment if it is found to be defective. If an inspector visits a site and equipment is tagged and not being used, then no violation occurs. However, the identification of defective equipment by an inspector that has not been tagged out and is being used results in a violation and administrative penalty.[24]

Massachusetts also has its own list of violations that allows an inspector to positively write violations due to the clarity of this list. In order to set some priority between the different types of violations which could be detected, Massachusetts separates the kinds of possible violations into "potentially emitting" and "non-emitting".[25] The description of these violations, with examples, are shown in Table 6-3.

6.5 SUMMARY

In summary, there are many issues to consider in the implementation of a Stage II program. The information contained in this chapter, as well as that provided in Appendix E, will assist an agency in the initial stages in understanding the various aspects of planning, permitting, and enforcement that need attention. In addition, the EPA enforcement guidance document should be consulted for enforcement guidance and requirements.

TABLE 6-3 MASSACHUSETTS STAGE II VIOLATIONS

Title of Violation	Example
PRIORITY, OR "EMITTING" VIOLATIONS	
1. Dispensing motor vehicle fuel without vapor recovery equipment	Station is not equipped with Stage II vapor recovery equipment but is continuing to dispense fuel.
2. Vapor recovery system is not operating properly	Bellows has been "tied back", latch system bypassed, aspirator not turned on, processor not turned on. Could also include a non-spec configuration (hoses too long or not assembled correctly)
3. Vapor recovery equipment is damaged	Tears or holes in the boot, kinks in the hose, hose is flattened.
4. Failing to prohibit use of a dispenser with an inoperative (or nonexistent) vapor recovery system	Equipment is damaged but dispenser is still operational and could be used.
5. Failing to install signs to show how to properly use the vapor recovery system	Signs are supposed to be conspicuous (outside) and readable, they must say DO NOT TOP OFF
6. Failing to install certified equipment	Installed equipment is not on the list of CARB certified equipment or equipment has been installed which, although each piece may be certified, the components are assembled in an uncertified configuration.
7. Failing to perform or mis-performing a requested compliance test	Not an immediate concern since a compliance test would initially be required only as a condition of a UAO. However, if such a request is made and the facility does not conduct the test properly, or ignores the requirement, a violation would be triggered.

TABLE 6-3 MASSACHUSETTS STAGE II VIOLATIONS (CONTINUED)

Title of Violation	Example
8. Failing to install and operate vapor recovery equipment after the appropriate deadline	So as to differentiate this violation from the first violation type listed above, the finding of this violation should be limited to facilities who have made no effort to comply with the requirements of the regulation (have not filed I&C or R&C forms) or facilities who are not listed but still have the fuel throughput that would trigger applicability to the regulation.
OTHER OR "NON-EMITTING" VIOLATIONS	
1. Failing to submit Installation and Certification forms	
2. Failing to train station operators	
3. Failing to place an "Out of Order" sign on a disabled dispenser	
4. Failing to maintain continuous records	

Source: Massachusetts Department of Air Quality Control, Compliance and Enforcement Manual.

6.6 REFERENCES

1. Stage II Background Information and Technical Support Document. Massachusetts Department of Environmental Quality Engineering. January 1989.

2. Telecon. Norwood, P., Pacific Environmental Services, Inc. (PES) with Wong, R., Dade County Air Pollution Control. May 14, 1991. Dade County Stage II Program.

3. Memorandum from Norwood, P., Pacific Environmental Services, Inc. to Shedd, S., U.S. Environmental Protection Agency. April 30, 1991. Trip Report to California Agencies to Discuss Stage II.

4. Memorandum from Norton, R. Pacific Environmental Services, Inc. to Shedd,S., Environmental Protection Agency. April 29, 1991. Trip Report to New York Department of Environmental Conservation.

5. Memorandum from Norwood, P., Pacific Environmental Services, Inc., to Shedd, S., Environmental Protection Agency. February 22, 1991. Trip Report to New Jersey Department of Environmental Protection.

6. Telecon. Bowen, E., Pacific Environmental Services, Inc. (PES) with Wong, P., Dade County Air Pollution Control. April 15, 1991. Dade County Stage II Program.

7. Telecon. Bowen, E., Pacific Environmental Services, Inc. (PES) with Estrusky, B., Pennsylvania DER. April 11, 1991. Philadelphia Stage II Program.

8. Telecon. Bowen, E., Pacific Environmental Services, Inc. (PES) with Carlson, L., Massachusetts DAQC. April 1, 1991. Massachusetts Stage II Program.

9. Reference 5.

10. Stage II Compliance and Enforcement Manual. Massachusetts Department of Environmental Quality Engineering. January 1989.

11. Reference 3.

12. Gasoline Facilities Phase I & II. California Air Resources Board, Compliance Assistance Program. Revised March 1991.

13. Reference 3.

14. Reference 3.

15. Reference 3.

16. Memorandum from Norwood, P., Pacific Environmental Services, Inc. to Shedd, S., U.S. Environmental Protection Agency. April 22, 1991. Trip Report to Monterey, CA, for CARB Stage II Inspection Workshop.

17. Reference 3.

18. Reference 3.

19. Reference 3.

20. California Code of Regulations, Title 17, Section 94006.

21. Reference 3.

22. Reference 3.

23. Reference 5.

24. Reference 10.

25. Reference 10.

TECHNICAL REPORT DATA
(Please read Instructions on the reverse before completing)

1. REPORT NO. EPA-450/3-91-022a	2.	3. RECIPIENT'S ACCESSION NO.
4. TITLE AND SUBTITLE Technical Guidance - Stage II Vapor Recovery Systems for Control of Vehicle Refueling Emissions at Gasoline Dispensing Facilities, Vol. I - Chapters		5. REPORT DATE November 1991
		6. PERFORMING ORGANIZATION CODE
7. AUTHOR(S)		8. PERFORMING ORGANIZATION REPORT NO.
9. PERFORMING ORGANIZATION NAME AND ADDRESS US Environmental Protection Agency Office of Air Quality Planning and Standards Emission Standards Division (MD-13) Research Triangle Park, NC 27711		10. PROGRAM ELEMENT NO.
		11. CONTRACT/GRANT NO. 68D10116
12. SPONSORING AGENCY NAME AND ADDRESS US Environmental Protection Agency Office of Air and Radiation Washington, DC 20460		13. TYPE OF REPORT AND PERIOD COVERED Final
		14. SPONSORING AGENCY CODE EPA/200/04

15. SUPPLEMENTARY NOTES

16. ABSTRACT

The Clean Air Act Amendments (CAAA) of 1990 require the installation of Stage II vapor recovery systems in many ozone nonattainment areas and direct EPA to issue guidance as appropriate on the effectiveness of Stage II systems. This document provides guidance on the effectiveness of Stage II systems and other Stage II technical information on emissions, controls, costs, and program implementation. Stage II vapor recovery on vehicle refueling is an effective control technology to reduce gasoline vapor emissions that contain volatile organic compounds (VOC) and hazardous air pollutants. Vehicle refueling emissions consist of the gasoline vapors displaced from the automobile tank by dispensed liquid gasoline. The Stage II system collects these vapors at the vehicle fillpipe and returns them to the underground storage tank.

KEY WORDS AND DOCUMENT ANALYSIS

17. a. DESCRIPTORS	b. IDENTIFIERS/OPEN ENDED TERMS	c. COSATI Field/Group
Gasoline Air Pollution Refueling Service Stations Stage II	Air Pollution Control	

18. DISTRIBUTION STATEMENT Unlimited	19. SECURITY CLASS (This Report) Unclassified	21. NO. OF PAGES 212
	20. SECURITY CLASS (This page) Unclassified	22. PRICE

PREVIOUS EDITION IS OBSOLETE