United States
Environmental Protection
Agency

Office of Air Quality
Planning and Standards
Research Triangle Park NC 27711

EPA-450/3-83-006
March 1984

Air

EPA

Guideline Series

Control of Volatile Organic Compound Leaks from Synthetic Organic Chemical and Polymer Manufacturing Equipment

CTG

EPA-450/3-83-006

Guideline Series

Control of Volatile Organic Compound Leaks from Synthetic Organic Chemical and Polymer Manufacturing Equipment

Emission Standards and Engineering Division

U.S. ENVIRONMENTAL PROTECTION AGENCY
Office of Air and Radiation
Office of Air Quality Planning and Standards
Research Triangle Park, North Carolina 27711

March 1984

GUIDELINE SERIES

The guideline series of reports is issued by the Office of Air Quality Planning and Standards (OAQPS) to provide information to state and local air pollution control agencies; for example, to provide guidance on the acquisition and processing of air quality data and on the planning and analysis requisite for the maintenance of air quality. Reports published in this series will be available—as supplies permit—from the Library Services Office (MD-35), U.S. Environmental Protection Agency, Research Triangle Park, North Carolina 27711, or for a nominal fee, from the National Technical Information Service, 5285 Port Royal Road, Springfield, Virginia 22161.

TABLE OF CONTENTS

	Page
LIST OF TABLES	vi
LIST OF FIGURES	viii
Chapter 1.0 - INTRODUCTION	1-1
Chapter 2.0 - PROCESSES AND POLLUTANT EMISSIONS	2-1
2.1 INTRODUCTION	
2.2 FACILITIES AND THEIR EMISSIONS	2-3
2.2.1 Potential Source Characterization and Description	2-3
2.2.1.1 Pumps	2-3
2.2.1.2 Compressors	2-8
2.2.1.3 Process Valves	2-11
2.2.1.4 Safety Relief Devices	2-14
2.2.1.5 Agitators	2-15
2.2.1.6 Open-Ended Lines	2-17
2.2.1.7 Sampling Connections	2-17
2.2.1.8 Flanges	2-17
2.3 MODEL UNITS	2-17
2.3.1 Model Units	2-17
2.3.1.1 Sources of Fugitive Emissions	2-18
2.3.1.2 Model Units Components	2-18
2.3.1.3 Uncontrolled Fugitive Emission Estimates	2-20
2.4 REFERENCES	2-22
Chapter 3.0 - EMISSION CONTROL TECHNIQUES	3-1
3.1 PRIMARY CONTROL METHODS	3-1
3.1.1 Individual Component Survey for Leak Detection	3-1
3.1.2 Repair Methods	3-2
3.1.2.1 Pumps	3-2
3.1.2.2 Compressors	3-2
3.1.2.3 Safety/Relief Valves	3-3
3.1.2.4 Valves	3-4
3.1.2.5 Flanges	3-4
3.1.3 Control Effectiveness of Leak Detection and Repair Techniques	3-4
3.1.4 Open-Ended Lines	3-7

TABLE OF CONTENTS (CONTINUED)

	Page
3.2 OTHER CONTROL STRATEGIES	3-9
3.2.1 General	3-10
3.2.2 Allowable Percentage of Valves Leaking	3-12
3.2.3 Alternative Work Practice for Valves	3-13
3.3 OTHER CONSIDERATIONS	3-16
3.3.1 Unsafe and Difficult to Reach Components	3-16
3.3.2 Small Process Unit	3-16
3.3.3 Unit Turnarounds	3-17
3.4 REFERENCES	3-20
Chapter 4.0 - ENVIRONMENTAL ANALYSIS OF RACT	4-1
4.1 REASONABLY AVAILABLE CONTROL TECHNOLOTY (RACT)	4-1
4.2 AIR POLLUTION	4-3
4.2.1 Development of VOC Emission Levels	4-3
4.2.2 VOC Emission Reduction	4-3
4.3 WATER POLLUTION	4-3
4.4 SOLID WASTE DISPOSAL	4-6
4.5 ENERGY	4-6
4.6 REFERENCES	4-7
Chapter 5.0 - CONTROL COST ANALYSIS OF RACT	5-1
5.1 BASIS FOR CAPITAL COST	5-1
5.1.1 Cost of Monitoring Instrument	5-1
5.1.2 Caps on Open-Ended Lines	5-1
5.1.3 Initial Leak Repair	5-4
5.1.4 Replacement Pump Seals at Initial Repair	5-4
5.2 BASIS FOR ANNUALIZED COSTS	5-6
5.2.1 Monitoring Labor	5-6
5.2.2 Leak Repair Labor	5-6
5.2.3 Maintenance Charges and Miscellaneous Costs	5-6
5.2.4 Administrative Costs	5-9
5.2.5 Capital Charges	5-9
5.2.6 Recovery Credits	5-9

TABLE OF CONTENTS (CONTINUED)

	Page
5.3 EMISSION CONTROL COSTS	5-11
5.3.1 Initial Costs	5-11
5.3.2 Recovery Credits	5-11
5.3.3 Net Annualized Cost	5-11
5.3.4 Differences in Net Annualized Costs	5-13
5.4 COST EFFECTIVENESS	5-13
5.5 REFERENCES	5-17
APPENDIX A - MAJOR COMMENTS RECEIVED ON THE DRAFT CTG	A-1
A.1 NEED AND COVERAGE OF THE CTG	A-1
A.2 ESTIMATES OF EMISSIONS, EMISSION REDUCTIONS, AND COSTS	A-6
A.3 RACT SELECTION, PROVISIONS, AND EXEMPTIONS	A-16
A.4 REFERENCES	A-27
APPENDIX B - COMMENT LETTERS RECEIVED ON DRAFT CONTROL TECHNIQUES GUIDELINE DOCUMENT	B-1

LIST OF TABLES

Table		Page
2-1	EQUIPMENT COUNTS FOR FUGITIVE VOC EMISSION SOURCES IN SOCMI MODEL UNITS	2-19
2-2	EMISSION FACTORS FOR LEAKS FROM PROCESS EQUIPMENT	2-21
3-1	INPUT PARAMETERS FOR LDAR MODEL	3-6
3-2	EFFECTIVENESS OF QUARTERLY LEAK DETECTION AND REPAIR	3-8
3-3	ILLUSTRATION OF A SKIP-PERIOD MONITORING PROGRAM	3-15
3-4	COST EFFECTIVENESS FOR QUARTERLY LEAK DETECTION AND REPAIR PROGRAMS FOR PROCESS UNITS PROCESSING SMALL VOLUMES OF LIGHT LIQUID AND GASEOUS VOC	3-18
4-1	ESTIMATED EMISSIONS AND EMISSIONS REDUCTION ON A MODEL UNIT BASIS	4-4
4-2	EMISSION FACTORS FOR SOURCES CONTROLLED UNDER RACT	4-5
5-1	CAPITAL COST DATA	5-2
5-2	CAPITAL COST ESTIMATES FOR IMPLEMENTING RACT (Thousands of June 1980 Dollars	5-3
5-3	LABOR-HOUR REQUIREMENTS FOR INITIAL LEAK REPAIR UNDER RACT	5-5
5-4	BASIS FOR ANNUALIZED COST ESTIMATES	5-7
5-5	ANNUAL MONITORING AND LEAK REPAIR LABOR REQUIREMENTS FOR RACT	5-8
5-6	RECOVERY CREDITS	5-10
5-7	ANNUALIZED CONTROL COST ESTIMATES FOR MODEL UNITS UNDER RACT (Thousands of June 1980 Dollars)	5-12
5-8	COST EFFECTIVENESS FOR MODEL UNITS UNDER RACT	5-14
5-9	COST EFFECTIVENESS FOR COMPONENT TYPES IN MODEL UNIT B	5-16
A-1	ESTIMATES OF VOC EMISSIONS FROM SOCMI	A-3

LIST OF TABLES (CONTINUED)

Table		Page
A-2	COSTS FOR COMPONENT TYPES IN MODEL UNIT B.	A-13
A-3	EQUIPMENT LEAKS OF VOC FROM SYNTHETIC ORGANIC CHEMICAL POLYMER MANUFACTURING: RACT	A-15
A-4	SUMMARY OF PERCENT OF SOURCES DISTRIBUTION CURVES AND PERCENT OF MASS EMISSIONS CURVES AT VARIOUS ACTION LEVELS	A-20
B-2	LIST OF COMMENTERS AND AFFILIATIONS.	B-2

LIST OF FIGURES

Figure		Page
2-1	General Schematic of Process Levels that Make Up the Organic Chemical Industry	2-2
2-2	Diagram of a Simple Packed Seal	2-4
2-3	Diagram of a Basic Single Mechanical Seal	2-5
2-4	Diagram of a Double Mechanical Seal (Back-to-Back Arrangement).	2-6
2-5	Diagram of a Double Mechanical Seal (Tandem Arrangement).	2-6
2-6	Diaphragm Pump.	2-7
2-7	Labyrinth Shaft Seal.	2-8
2-8	Restrictive-Ring Shaft Seal	2-9
2-9	Mechanical (Contact) Shaft Seal	2-10
2-10	Liquid Film Shaft Seal With Cylindrical Bushing	2-10
2-11	Diagram of a Gate Valve	2-11
2-12	Example of Bellows Seals.	2-12
2-13	Diagrams of Valves With Diaphragm Seals	2-13
2-14	Diagram of a Spring-Loaded Relief Valve	2-14
2-15	Diagram of a Hydraulic Seal for Agitators	2-16
2-16	Diagram of Agitator Lip Seal.	2-16
3-1	Cost Effectiveness of Quarterly Leak Detection and Repair of Valves With Varying Leak Frequency - SOCMI Units	3-11

1.0 INTRODUCTION

The Clean Air Act Amendments of 1977 require each State in which there are areas in which the national ambient air quality standards (NAAQS) are exceeded to adopt and submit revised state implementation plans (SIP's) to EPA. Revised SIP's were required to be submitted to EPA by January 1, 1979. States which were unable to demonstrate attainment with the NAAQS for ozone by the statutory deadline of December 31, 1982, could request extensions for attainment with the standard. States granted such an extension are required to submit a further revised SIP by July 1, 1982.

Section 172(a)(2) and (b)(3) of the Clean Air Act require that nonattainment area SIP's include reasonably available control technology (RACT) requirements for stationary sources. As explained in the "General Preamble for Proposed Rulemaking on Approval of State Implementation Plan Revisions for Nonattainment Areas," (44 FR 20372, April 4, 1979) for ozone SIP's, EPA permitted States to defer the adoption of RACT regulations on a category of stationary sources of volatile organic compounds (VOC) until after EPA published a control techniques guideline (CTG) for that VOC source category. See also 44 FR 53761 (September 17, 1979). This delay allowed the states to make more technically sound decisions regarding the application of RACT.

Although CTG documents review existing information and data concerning the technology and cost of various control techniques to reduce emissions, they are, of necessity, general in nature and do not fully account for unique variations within a stationary source category. Consequently, the purpose of CTG documents is to provide State and local air pollution control agencies with an initial information base for proceeding with their own analysis of RACT for specific stationary sources.

2.0 PROCESSES AND POLLUTANT EMISSIONS

2.1 INTRODUCTION

The discussion presented in this document applies to equipment in process units operated to produce one or more of the synthetic organic chemicals listed in Appendix E of the proposed standards of performance for SOCMI (46 FR 1136, January 5, 1981), methyl tert-butyl ether (MTBE), polyethylene, polypropylene, and polystyrene. The equipment in process units in the synthetic organic chemical manufacturing industry (SOCMI) is similar to equipment in the polymer manufacturing industry. Both industries process volatile organic compounds. Therefore, the information and discussion presented in this chapter and subsequent chapters applies equally to SOCMI plants and polymer plants.

The SOCMI is a segment of the chemical industry consisting of some of the higher volume intermediate and finished products. The polymer manufacturing industries to which the discussion in this document applies are polyethylene, polypropylene, and polystyrene. It should be emphasized that the discussion in this document is intended to apply to equipment in process units which manufacture these chemicals.

Most of the SOCMI chemicals produced in the United States are derived from crude petroleum or natural gas. The ten principal feedstocks used in the manufacture of organic chemicals are produced primarily in petroleum refineries. After chemical feedstocks are manufactured from petroleum, natural gas, and other raw materials, they are processed into chemical intermediates and end-use chemicals (see Figure 2-1). Approximately 12 percent of the plants in the United States produce less than 5,000 megagrams (Mg) annually. Another 12 percent have production capacities in excess of 500,000 Mg.

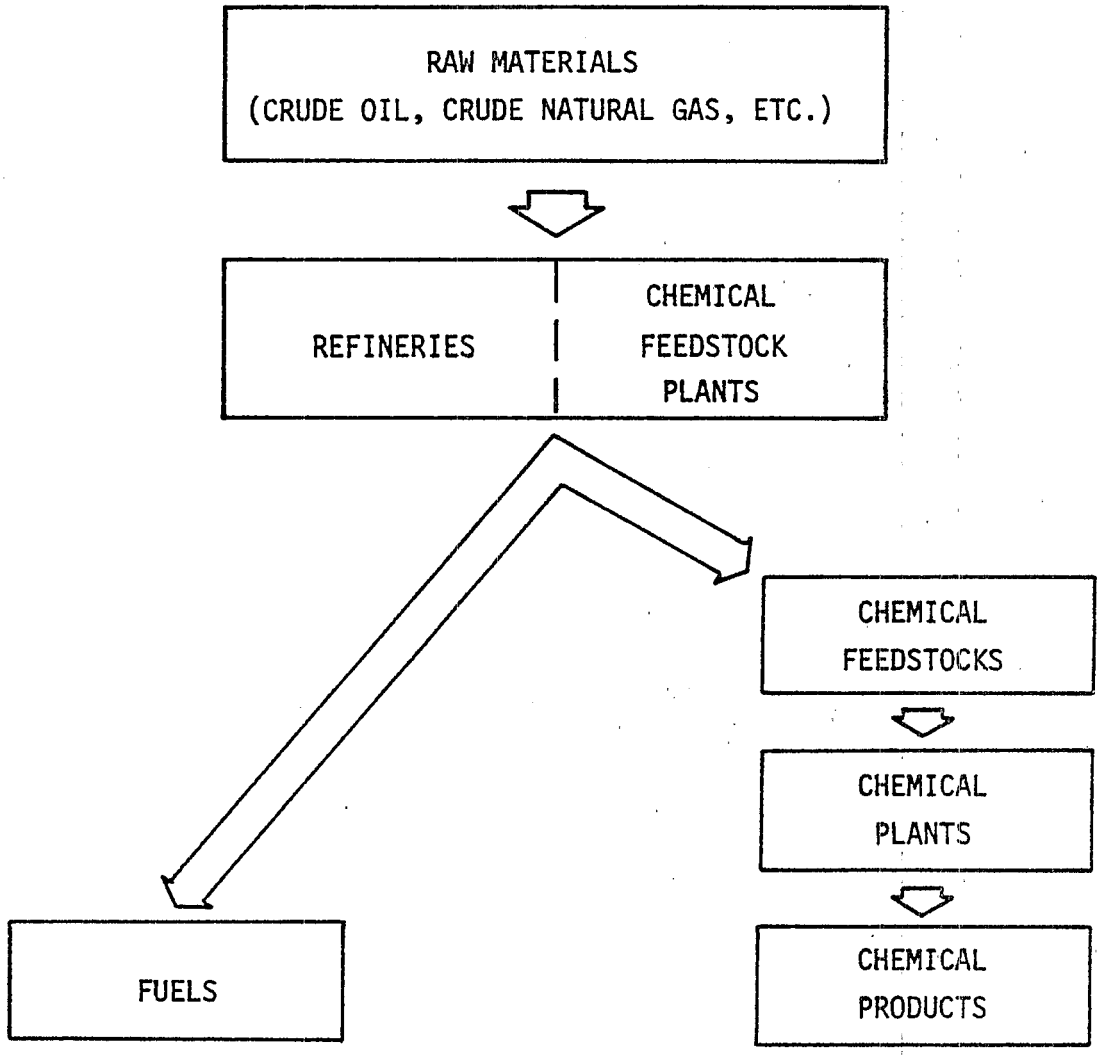

Figure 2-1. General schematic of process levels that make up the organic chemical industry.

The polymer manufacturing industry includes operations which convert monomer or chemical intermediate materials obtained from the basic petrochemical industry and the SOCMI into polymer products. Such products include polyethylene, polypropylene, and polystyrene.

2.2 FACILITIES AND THEIR EMISSIONS

2.2.1 Potential Source Characterization and Description

In this document, fugitive emissions from process units are considered to be those volatile organic compound (VOC) emissions that result when process fluid (either gaseous or liquid) leaks from plant equipment. There are many potential sources of fugitive emissions in a typical process unit. The following sources will be considered in this chapter: pumps, compressors, in-line process valves, pressure relief devices, open-ended valves, sampling connections, flanges, agitators and cooling towers. These potential sources are described below.

2.2.1.1 Pumps. Pumps are used extensively in process units for the movement of organic liquids. The centrifugal pump is the most widely used pump. However, other types, such as the positive-displacement, reciprocating and rotary action, and special canned and diaphragm pumps, are also used. Chemicals transferred by pumps can leak at the point of contact between the moving shaft and stationary casing. Consequently, all pumps except the shaftless type (canned-motor and diaphragm) require a seal at the point where the shaft penetrates the housing in order to isolate the pump's interior from the atmosphere.[1]

Two generic types of seals, packed and mechanical, are currently in use on pumps. Packed seals can be used on both reciprocating and rotary action types of pumps. As Figure 2-2 shows, a packed seal consists of a cavity ("stuffing box") in the pump casing filled with special packing material that is compressed with a packing gland to form a seal around the shaft. Lubrication is required to prevent the buildup of frictional heat between the seal and shaft. The necessary lubrication is provided by a lubricant that flows between the packing and the shaft.[2] Deterioration of the packing will result in process liquid leaks.

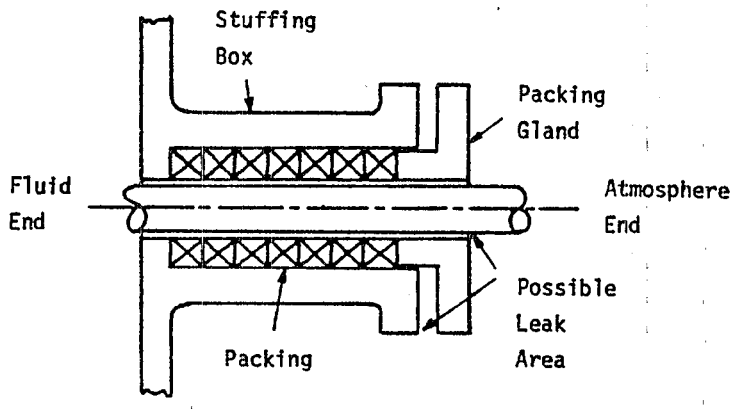

Figure 2-2. Diagram of a simple packed seal.[3]

Mechanical seals are limited in application to pumps with rotating shafts and can be further categorized as single and double mechanical seals. There are many variations to the basic design of mechanical seals, but all have a lapped seal face between a stationary element and a rotating seal ring. In a single mechanical seal application (Figure 2-3), the rotating-seal ring and stationary element faces are lapped to a very high degree of flatness to maintain contact throughout their entire mutual surface area. As with a packed seal, the seal faces must be lubricated to remove frictional heat; however, because of its construction, much less lubricant is needed.

A mechanical seal is not a leak-proof device. Depending on the condition and flatness of the seal faces, the leakage rate can be quite low (as small as a drop per minute) and the flow is often not visually detectable. In order to minimize fugitive emissions due to seal leakage, an auxiliary sealing device such as packing can be employed.[4]

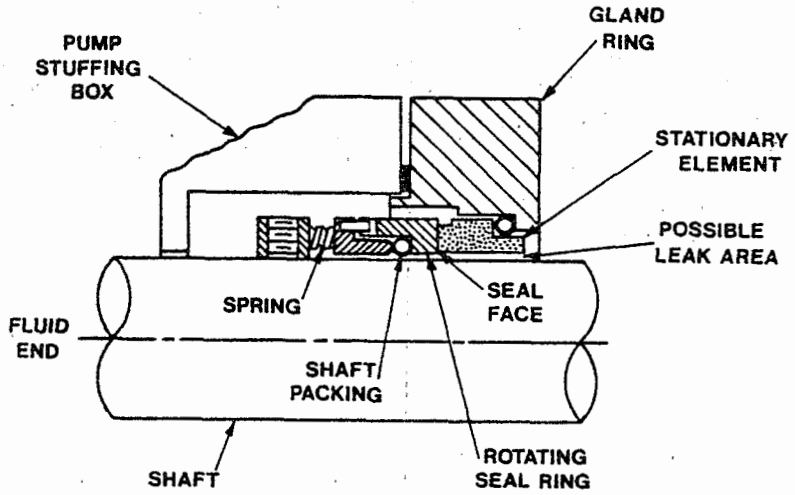

Figure 2-3. Diagram of a basic single mechanical seal.[5]

In a dual mechanical seal application, two seals can be arranged back-to-back or in tandem. In the back-to-back arrangement (Figure 2-4), the two seals provide a closed cavity between them. A seal liquid, such as water or seal oil, is circulated through the cavity. Because the seal liquid surrounds the double seal and lubricates both sets of seal faces in this arrangement, the heat transfer and seal life characteristics are much better than those of the single seal. In order for the seal to function, the seal liquid must be at a pressure greater than the operating pressure of the stuffing box. As a result some seal liquid will leak across the seal faces. Liquid leaking across the inboard face will enter the stuffing box and mix with the process liquid. Seal liquid going across the outboard face will exit to the atmosphere.[6]

In a tandem dual mechanical seal arrangement (Figure 2-5), the seals face the same direction. The secondary seal provides a backup for the primary seal. A seal flush is used in the stuffing box to remove the heat generated by friction. The cavity between the two seals is filled with a buffer or barrier liquid. However, the barrier liquid is at a pressure lower than that in the stuffing box. Therefore, any leakage will be from

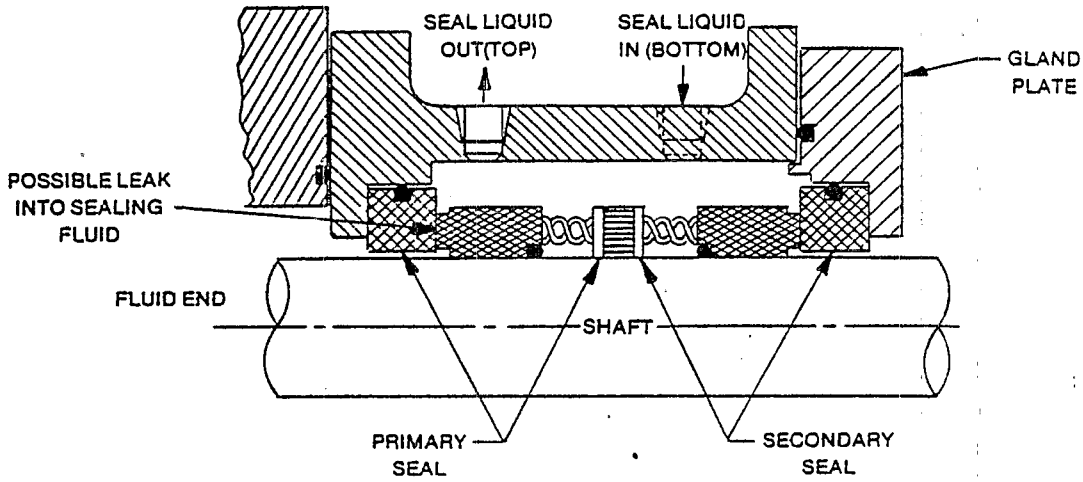

Figure 2-4. Diagram of a double mechanical seal (back-to-back arrangement)[7]

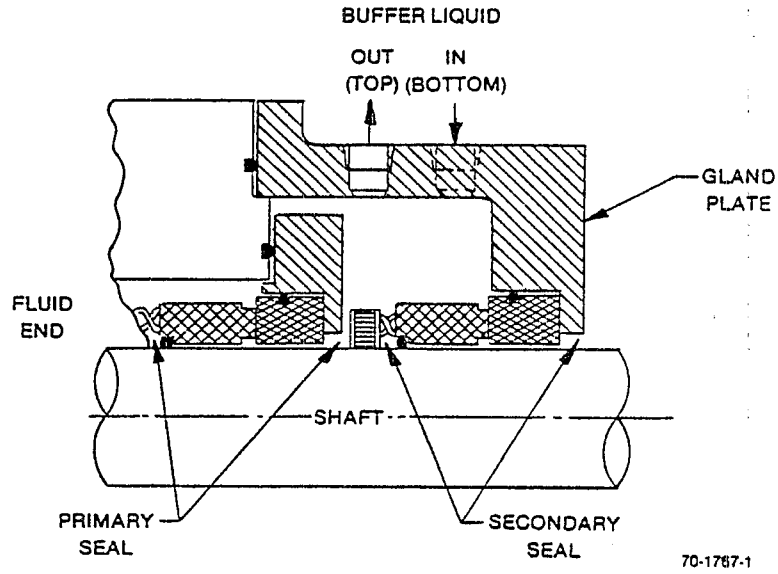

Figure 2-5. Diagram of a double mechanical seal (tandem arrangement)[8]

the stuffing box into the seal cavity containing the barrier liquid. Since this liquid is routed to a closed reservoir, process liquid that has leaked into the seal cavity will also be transferred to the reservoir. At the reservoir, the process liquid could vaporize and be emitted to the atmosphere. To ensure that VOC does not leak from the reservoir, the reservoir can be vented to a control device.[9]

Another type of pump that has been used is the shaftless pump which includes canned-motor and diaphragm pumps. In canned-motor pumps the cavity housing the motor rotor and the pump casing are interconnected. As a result, the motor bearings run in the process liquid and all seals are eliminated. Because the process liquid is the bearing lubricant, abrasive solids cannot be tolerated. Canned-motor pumps are being widely used for handling organic solvents, organic heat transfer liquids, light oils, as well as many toxic or hazardous liquids, or where leakage is an economic problem.[10]

Diaphragm pumps (see Figure 2-6) perform similarly to piston and plunger pumps. However, the driving member is a flexible diaphragm fabricated of metal, rubber, or plastic. The primary advantage of this arrangement is the elimination of all packing and seals exposed to the process liquid. This is an important asset when hazardous or toxic liquids are handled.[11]

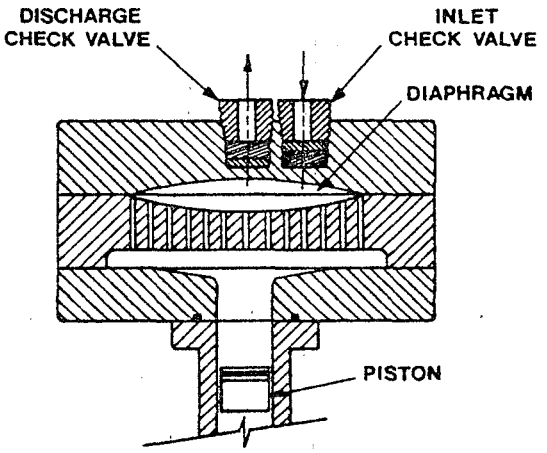

Figure 2-6. Diaphragm pump.[12]

2.2.1.2 Compressors. Gas compressors used in process units are similar to pumps in that they can be driven by rotary or reciprocating shafts. They are also similar to pumps in their need for shaft seals to isolate the process gas from the atmosphere. As with pumps, these seals are likely to be the source of fugitive emissions from compressors.

Shaft seals for compressors may be chosen from several different types: labyrinth, restrictive carbon rings, mechanical contact, and liquid film. All of these seal types are leak restriction devices; none of them completely eliminate leakage. Many compressors may be equipped with ports in the seal area to evacuate gases collecting there.

The labyrinth type of compressor seal is composed of a series of close tolerance, interlocking "teeth" which restrict the flow of gas along the shaft. A straight pass labyrinth compressor seal is shown in Figure 2-7. Many variations in "tooth" design and materials of construction are available. Although labyrinth type seals have the largest leak potential of the different types, properly applied variations in "tooth" configuration and shape can reduce leakage by up to 40 percent over a straight pass type labyrinth.[13]

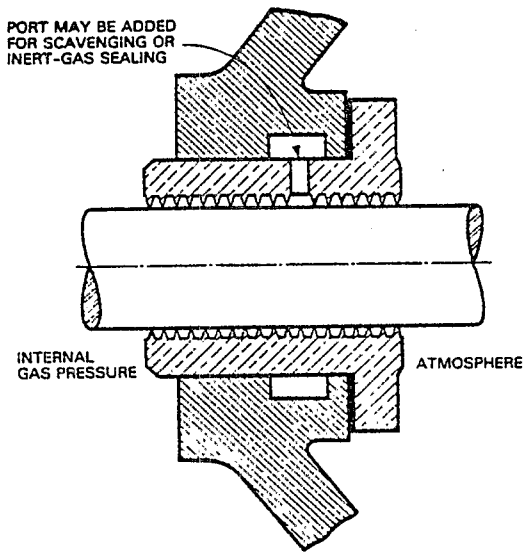

Figure 2-7. Labyrinth shaft seal.[14]

Restrictive carbon ring seals consist of multiple stationary carbon rings with close shaft clearances. This type of seal may be operated dry or with a sealing fluid. Restrictive ring seals can achieve lower leak rates than the labyrinth.[16] A restrictive ring seal is shown in Figure 2-8.

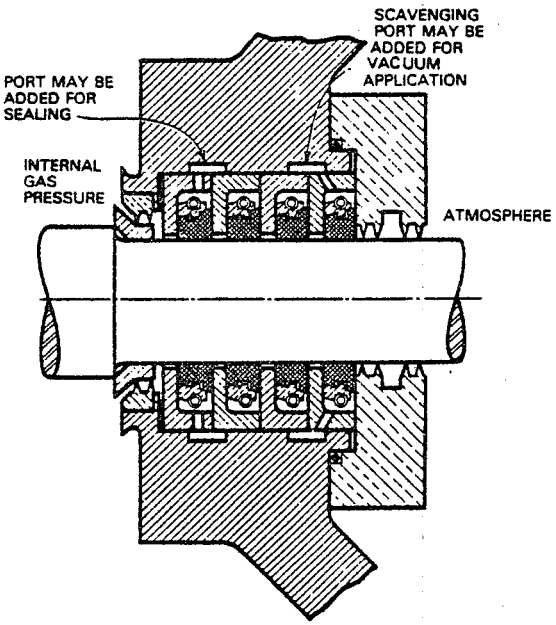

Figure 2-8. Restrictive-ring shaft seal.[15]

Mechanical contact seals (shown in Figure 2-9) are similar to the mechanical seals described for pumps. In this type of seal, clearance between the rotating and stationary elements is reduced to zero. Oil or another suitable lubricant is supplied to the seal faces. Mechanical seals can achieve the lowest leak rates of the types described here, but they are not suitable for all processing conditions.[19]

Centrifugal compressors also can be equipped with liquid film seals. A diagram of a liquid film seal is shown in Figure 2-10. The seal is formed by a film of oil between the rotating shaft and stationary gland. When the circulating oil is returned to the oil reservoir, process gas can be released to the atmosphere.[20] To eliminate release of VOC emissions from the seal oil system, the reservoir can be vented to a control device.

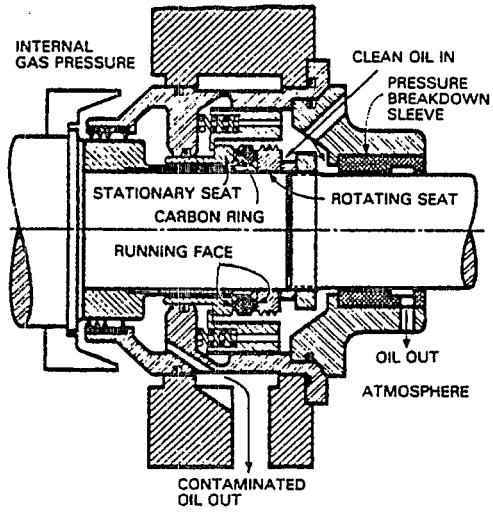

Figure 2-9. Mechanical (contact) shaft seal.[17]

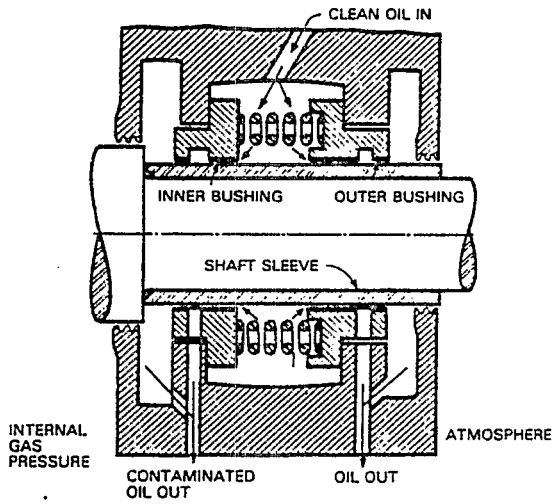

Figure 2-10. Liquid film shaft seal with cylindrical bushing.[18]

2.2.1.3 Process Valves. One of the most common pieces of equipment in organic chemical plants is the valve. The types of valves commonly used are control, globe, gate, plug, ball, relief, and check valves. All except the relief valve (to be discussed further below) and check valve are activated by a valve stem, which may have either a rotational or linear motion, depending on the specific design. This stem requires a seal to isolate the process fluid inside the valve from the atmosphere as illustrated by the diagram of a gate valve in Figure 2-11. The possibility of a leak through this seal makes it a potential source of fugitive emissions. Since a check valve has no stem or subsequent packing gland, it is not considered to be a potential source of fugitive emissions.

Sealing of the stem to prevent leakage can be achieved by packing inside a packing gland or O-ring seals. Valves that require the stem to move in and out with or without rotation must utilize a packing gland. Conventional packing glands are suited for a wide variety of packing materials. The most common are various types of braided asbestos that contain lubricants. Other packing materials include graphite, graphite-impregnated fibers, and tetrafluoroethylene. The packing material used depends on the valve application and configuration.[21] These conventional packing glands can be used over a wide range of operating temperatures. At high pressures these glands must be quite tight to attain a good seal.[22]

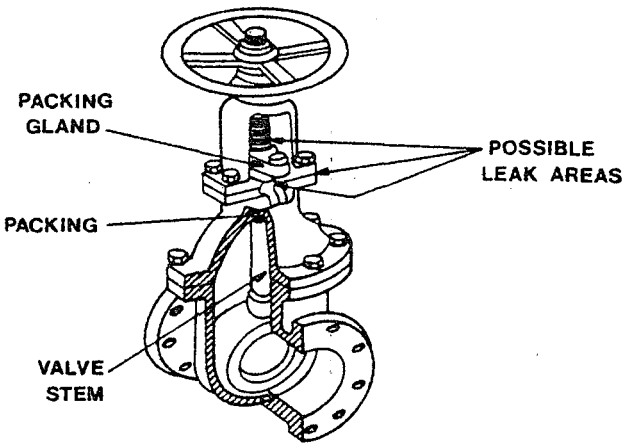

Figure 2-11. Diagram of a gate valve.[23]

Elastomeric O-rings are also used for sealing process valves. These O-rings provide good sealing but are not suitable where there is sliding motion through the packing gland. Those seals are rarely used in high pressure service, and operating temperatures are limited by the seal material.[24]

Bellows seals are more effective for preventing process fluid leaks than the conventional packing gland or any other gland-seal arrangement.[25] This type of seal incorporates a formed metal bellows that makes a barrier between the disk and body bonnet joint. An example of this seal is presented in Figure 2-12. The bellows is the weak point of the system and service life can be quite variable. Consequently, this type of seal is normally backed up with a conventional packing gland and is often fitted with a leak detector in case of failure.[26]

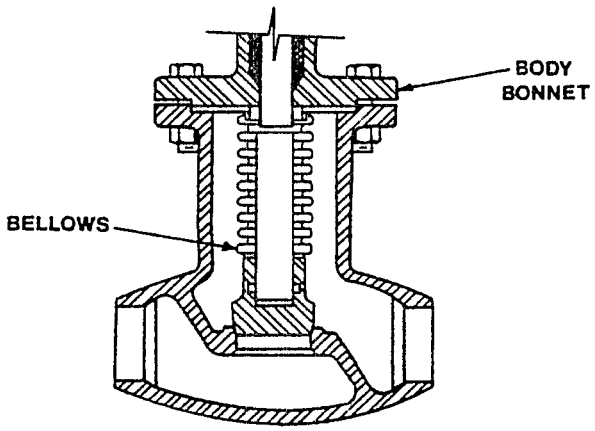

Figure 2-12. Example of bellows seals.[27]

A diaphragm may be used to isolate the working parts of the valve and the environment from the process liquid. Two types of valves which utilize diaphragms are illustrated in Figures 2-13(a) and (b). As Figure 2-13(b) shows, the diaphragm may also be used to control the flow of the process fluid. In this design, a compressor component pushes the diaphragm toward the valve bottom, throttling the flow. The diaphragm and compressor are connected in a manner so that it is impossible for them to be separated under normal working conditions. When the diaphragm reaches the valve bottom, it seals firmly against the bottom, forming a leak-proof seal. This configuration is recommended for fluids containing solid particles and for medium-pressure service. Depending on the diaphragm material, this type of valve can be used at temperatures up to 205°C and in severe acid solutions. If failure of the seal occurs, a valve employing a diaphragm seal can become a source of fugitive emissions.[28]

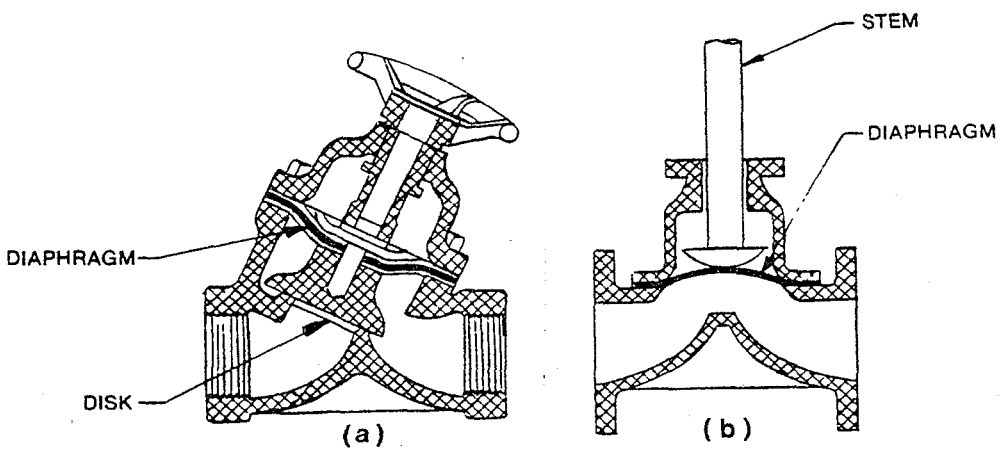

Figure 2-13. Diagrams of valves with diaphragm seals.[29]

2.2.1.4 Safety Relief Devices. Engineering codes require that pressure-relieving devices or systems be used in applications where the process pressure may exceed the maximum allowable working pressure of the vessel. The most common type of pressure-relieving device used in process units is the pressure relief valve (Figure 2-14). Typically, safety relief valves are spring-loaded and designed to open when the process pressure exceeds a set pressure, allowing the release of vapors or liquids until the system pressure is reduced to its normal operating level. When the normal pressure is reattained, the valve reseats, and a seal is again formed.[30] The seal is a disk on a seat, and the possibility of a leak through this seal makes the pressure relief valve a potential source of VOC fugitive emissions. Two potential causes of leakage from safety relief valves are: "simmering or popping," a condition due to the system pressure being close to the set pressure of the valve, and improper reseating of the valve after a relieving operation.[31]

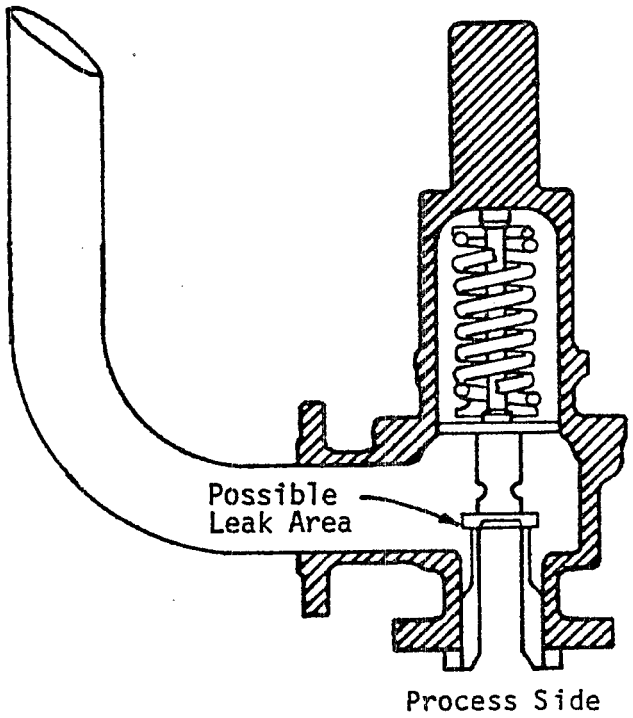

Figure 2-14. Diagram of a spring-loaded relief valve.

Rupture disks are also common in process units. These disks are made of a material that ruptures when a set pressure is exceeded, thus allowing the system to depressurize. The advantage of a rupture disk is that the disk seals tightly and does not allow any VOC to escape from the system under normal operation. However, when the disk does rupture, the system depressurizes until atmospheric conditions are obtained. This could result in an excessive loss of product or a corresponding excessive release of fugitive emissions.

2.2.1.5 Agitators. Agitators are commonly used to stir or blend chemicals. Like pumps and compressors, agitators may leak organic chemicals at the point where the shaft penetrates the casing. Consequently, seals are required to minimize fugitive emissions from agitators. Four seal arrangements are commonly used with agitators. These are compression packing (packed seal), mechanical seals, hydraulic seals, and lip seals.[32] Packed seals for agitators are very similar in design and application to the packed seals for pumps (Section 2.2.1.1).

Although mechanical seals are more costly than the other three seal arrangements, they offer a greatly reduced leakage rate to offset their higher cost. The maintenance frequency of mechanical seals is, also, one-half to one-fourth that of packed seals.[33] In fact, at pressures greater than 1135.8 kPa (150 psig), the leakage rate and maintenance frequency are so superior that the use of packed seals on agitators is rare.[34] As with packed seals, the mechanical seals for agitators are similar to the design and application of mechanical seals for pumps (Section 2.2.1.1).

The hydraulic seal (Figure 2-15) is the simplest and least used agitator shaft seal. In this type of seal, an annular cup attached to the process vessel contains a liquid that is in contact with an inverted cup attached to the rotating agitator shaft. The primary advantage of this seal is that it is a non-contact seal. However, this seal is limited to low temperatures and pressures and can only handle very small pressure fluctuations. Organic chemicals may contaminate the seal liquid and then be released into the atmosphere as fugitive emissions.[35]

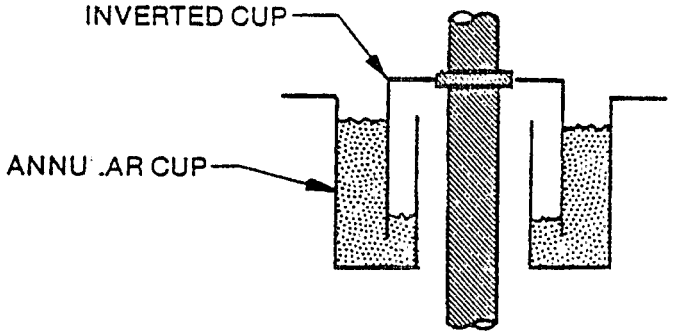

Figure 2-15. Diagram of a hydraulic seal for agitators.[36]

A lip seal (Figure 2-16) can be used on a top-entering agitator as a dust or vapor seal. The sealing element is a spring-loaded elastomer. Lip seals are relatively inexpensive and easy to install. Once the seal has been installed the agitator shaft rotates in continuous contact with the lip seal. Pressure limits of the seal are 2 to 3 psi because it operates without lubrication. Operating temperatures are limited by characteristics of the elastomer. Fugitive VOC emissions could be released through this seal when this seal wears excessively or the operating pressure surpasses the pressure limits of the seal.[37]

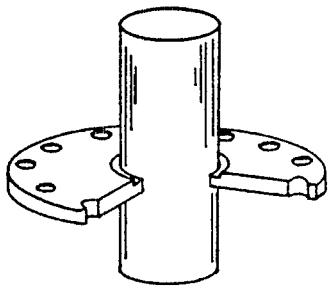

Figure 2-16. Diagram of agitator lip seal.[38]

2.2.1.6 Open-Ended Lines. Some valves are installed in a system so that they function with the downstream line open to the atmosphere. Examples are purge valves, drain valves, and vent valves. A faulty valve seat or incompletely closed valve would result in leakage through the valve and fugitive VOC emissions to the atmosphere.

2.2.1.7 Sampling Connections. The operation of a process unit is checked periodically by routine analyses of feedstocks and products. To obtain representative samples for these analyses, sampling lines must first be purged prior to sampling. The purged liquid or vapor is sometimes drained onto the ground or into a sewer drain, where it can evaporate and release VOC emissions to the atmosphere.

2.2.1.8 Flanges. Flanges are bolted, gasket-sealed junctions used wherever pipe or other equipment such as vessels, pumps, valves, and heat exchangers may require isolation or removal. Normally, flanges are employed for pipe diameters for 50 mm or greater and are classified by pressure and face type.

Flanges may become fugitive emission sources when leakage occurs due to improperly chosen gaskets or a poorly assembled flange. The primary cause of flange leakage is due to thermal stress that piping or flanges in some services undergo; this results in the deformation of the seal between the flange faces.[39]

2.3 MODEL UNITS

This section presents model process unit parameters. The model units were selected to represent the range of processing complexity in the industry. They provide a basis for determining environmental and cost impacts of reasonably available control technology (RACT).

2.3.1 Model Units

Available data show that fugitive emissions are proportional to the number of potential sources but are not related to capacity, throughput, age, temperature, or pressure.[40] Therefore, model units defined for this analysis represent different levels of process complexity (number of sources) rather than different unit size.

2.3.1.1 Sources of Fugitive Emissions. Data from petroleum refineries indicate that cooling towers are very small sources of VOC emission.[41] Differences in operating procedures, such as recirculation of process water, might result in cooling tower VOC emissions, but no data are available to verify this. Emission rates from agitator seals have not been measured. Since there are no data from similar sources in other industries, no estimates of emission rate can be made. Because of these uncertainties, cooling towers and agitator seals are not included in the Model Units.

2.3.1.2 Model Units Components. In order to estimate emissions, control costs and environmental impacts for process units on a unit specific basis, three model units were developed. The equipment components comprising the model units are shown in Table 2-1. These three model units represent the range of emission source populations that may exist in SOCMI process units. The number of equipment components for each model unit was developed from a data base compiled by IT Enviroscience, Inc (formerly Hydroscience).[43] The data base included equipment source counts from 62 SOCMI plants which produce 35 different chemicals. These plant sites represent approximately 5 percent of the total existing SOCMI plants and include large and small capacities, batch and continuous production methods, and varying levels of process complexity. The source counts for the 35 chemicals include pumps, valves, and compressors. These counts were used in combination with the number of sites which produce each chemical in order to determine the average number of sources per site.[44] Hydroscience estimates that 52 percent of existing SOCMI plants are similar to the Model Unit A, 33 percent are similar to B, and 15 percent are similar to C.

Data from petroleum refineries indicate that emission rates of sources decrease as the vapor pressure (volatility) of the process fluid decreases. Three classes of volatility have been established based on the petroleum refinery data. These include gas/vapor service, light liquid service, and heavy liquid service.[45] The split between light and heavy liquids for the refinery data is between naphtha and kerosene. Since similar stream names may have different vapor pressures, depending on site specific factors, it is difficult to quantify the light-heavy split. The break point is

TABLE 2-1. EQUIPMENT COUNTS FOR FUGITIVE VOC EMISSION SOURCES IN SOCMI MODEL UNITS[a]

Equipment Component[b]	Number of Components in Model Unit[c]		
	Model Unit A	Model Unit B	Model Unit C
Pump seals			
Light liquid service[d]			
Single mechanical	5	19	60
Double mechanical	3	10	31
Sealless	0	1	1
Heavy liquid service[e]			
Single mechanical	5	24	73
Packed	2	6	20
Valves			
Gas service	99	402	1232
Light liquid service	131	524	1618
Heavy liquid service	132	524	1618
Safety/relief valves			
Gas service	11	42	130
Light liquid service	1	4	13
Heavy liquid service	1	4	14
Open-ended lines[f]	104	415	1277
Compressor seals	1	2	8
Sampling connections[g]	26	104	320
Flanges	600	2400	7400

[a]Reference 42.

[b]Equipment components in VOC service only.

[c]52 percent of existing SOCMI units are similar to model unit A.
33 percent of existing SOCMI units are similar to model unit B.
15 percent of existing SOCMI units are similar to model unit C.

[d]Light liquid is defined as a fluid with vapor pressure greater than 0.3 kPa at 20°C. This vapor pressure represents the split between kerosene and naphtha and is based on data presented in Reference 40.

[e]Heavy liquid is defined as a fluid with vapor pressure less than 0.3 kPa at 20°C. This vapor pressure represents the split between kerosene and naphtha and is based on data presented in Reference 40.

[f]Sample, drain, and purge valves.

[g]Based on 25 percent open-ended valves. Reference 1, pg. IV-3.

approximately at a vapor pressure of 0.3 kPa at 20°C. The data collected by Hydroscience were used to estimate the split between gas/vapor and liquid service for each source.[46] In order to apply emission factors for light and heavy liquid service, it is assumed that one-half of SOCMI liquid service sources are in light liquid service. There are no data available on the actual distribution of sources in volatility ranges. It is assumed that all packed seal pumps are in heavy liquid service. This assumption is reasonable, since more volatile liquid is more suitable for mechanical seal applications, and newer process units tend to use fewer packed seals. Sampling connections are a subset of the open-ended valve category. Approximately 25 percent of open-ended valves are used for sampling connections.[47] Emissions which occur through the valve stem, gland, and open-end are included in the open-ended valve category. The emission factor for sampling connection applies only to emissions which result from sample purging.

2.3.1.3 Uncontrolled Fugitive Emission Estimates. The development of uncontrolled fugitive emission factors for SOCMI is described in Reference 42. The resulting emission factors are shown in Table 2-2. Generally, the method employed the use of leak/no leak emission factors derived from data in Reference 40 coupled with leak frequencies from Reference 49 to arrive at average emission factors for equipment in SOCMI. However, there are three exceptions: (1) The gas valve emission factor reported in Reference 50 for SOCMI units had a smaller confidence interval associated with it, and it was substituted for the emission factor derived from data in Reference 40; (2) The emission factor for sampling connections is based on the amount of sampling purge reported for every 1,000 barrels of refinery throughput[51] and the average count of sampling connections per 1,000 barrels of refinery throughput reported;[52] (3) The emission factor for open-ended lines represents valve seat leakage only. The emissions attributable to the valve, such as from around the stem and packing are accounted for in the valve emission factor.

TABLE 2-2. EMISSION FACTORS FOR LEAKS FROM PROCESS EQUIPMENT

Equipment	Emission Factors kg/hr/source
Pump Seals	
Light Liquid	0.0494
Heavy Liquid	0.0214
Valves	
Gas	0.0056
Light Liquid	0.0071
Heavy Liquid	0.00023
Compressor Seals	0.228
Safety Relief Valves - Gas	0.104
Flanges	0.00083
Open-ended Lines	0.0017
Sampling Connections	0.0150

Reference 48.

2.4 REFERENCES

1. Erikson, D. G., and V. Kalcevic. (IT Enviroscience.) Fugitive Emissions. In: U. S. Environmental Protection Agency. Organic Chemical Manufacturing Volume 3: Storage, Fugitive and Secondary Sources. Publication No. EPA-450/3-80-025. December 1980. Report 2, p. II-2.

2. Reference 1.

3. Reference 1, p. II-3.

4. Ramsden, J. H. How to Choose and Install Mechanical Seals. Chem. E., 85(22):97-102. 1978.

5. Reference 1, p. II-3.

6. Reference 4, p. 99.

7. Reference 4, p. 99.

8. Reference 4, p. 99.

9. Reference 4, p. 99.

10. Perry, R. H., and C. H. Chilton, Chemical Engineers' Handbook, 5th Ed. New York, McGraw-Hill Book Company, 1973. p. 6-8.

11. Reference 10, p. 6-13.

12. Nurken, R. F. Pump Selection for the Chemical Process Industries, Chem. E., February 18, 1974. p. 120.

13. Nelson, W. E. Compressor Seal Fundamentals. Hydrocarbon Processing, 56(12):91-95. 1977.

14. American Petroleum Institute, "Centrifugal Compressors for General Refinery Service", API Standard 617, Fourth Edition, November, 1979, p. 8. (Figures reprinted by courtesy of the American Petroleum Institute.)

15. Reference 14, p. 9.

16. Reference 13.

17. Reference 14.

18. Reference 14.

19. Reference 13.

20. Reference 1, p. 11-7.

21. Lyons, J. L., and C. L. Ashland, Jr. Lyons' Enclopedia of Valves. New York, Van Nostrand Reinhold Co., 1975. 290p.

22. Templeton, I. C. Valve Installation, Operation and Maintenance. Chem. E., 78(23)141-149, 1971.

23. Reference 1, p. II-5.

24. Reference 22, p. 147-148.

25. Reference 22, p. 148.

26. Reference 22, p. 148.

27. Reference 22, p. 148.

28. Pilulik, A. Manually Operated Valves. Chem. E., April 3, 1978. p. 121.

29. Reference 28, p. 121.

30. Steigerwald, B. J. Emissions of Hydrocarbons to the Atmosphere from Seals on Pumps and Compressors. Report No. 6, PB 216 582, Joint District, Federal and State Project for the Evaluation of Refinery Emissions. Air Pollution Control District, County of Los Angeles, California. April 1958. 37 p.

31. Reference 1, p. II-7.

32. Ramsey, W. D. and G. C. Zoller. How the Design of Shafts, Seals and Impeller Affects Agitator Performance. Chem. E., 83(18):101-108. 1976.

33. Reference 32, p. 105.

34. Reference 32, p. 105.

35. Reference 32, p. 105.

36. Reference 32, p. 106.

37. Reference 32, p. 106.

38. Reference 32, p. 106.

39. McFarland, I. Preventing Flange Fires. Chem. E. Prog., 65(8):59-61. 1969.

40. Wetherold, R. G., L. P. Provost, and C. D. Smith (Radian Corporation.) Assessment of Atmospheric Emissions from Petroleum Refining, Appendix B: Detailed Results. (Prepared for U. S. Environmental Protection Agency.) Research Triangle Park, N.C. Publication No. EPA-600/2-80-075c. April 1980.

41. Reference 40.

42. U. S. Environmental Protection Agency. Fugitive Emission Sources of Organic Compounds -- Additional Information on Emissions, Emission Reductions, and Costs. Research Triangle Park, N.C. Publication No. EPA-450/3-82-010. April 1982.

43. Reference 1, pp. IV-1, 2.

44. Reference 1, p. II-9-13.

45. Reference 40, pp. 11-23.

46. Reference 1, p. II-10.

47. Reference 1, p. IV-8.

48. Reference 42.

49. Blacksmith, J. R., et al. (Radian Corporation.) Problem Oriented Report: Frequency of Leak Occurrence for Fittings in Synthetic Organic Chemical Plant Process Units. (Prepared for U. S. Environmental Protection Agency.) Research Triangle Park, N.C. Publication No. EPA-600/2-81-003. September 1980.

50. Langley, G. J. and L. P. Provost. (Radian Corporation.) Revision of Emission Factors for Nonmethane Hydrocarbons from Valves and Pump Seals in SOCMI Processes - Technical Note. (Prepared for the U. S. Environmental Protection Agency.) Research Triangle Park, N.C. November 1981.

51. U. S. Environmental Protection Agency. Compilation of Air Pollutant Emission Factors. Research Triangle Park, N.C. AP-42. February 1980.

52. Powell, D., et al. (PES, Inc.) Development of Petroleum Refinery Plot Plans. (Prepared for U. S. Environmental Protection Agency.) Research Triangle Park, N.C. Publication No. EPA-450/3-78-025. June 1978.

3.0 EMISSION CONTROL TECHNIQUES

Sources of process unit equipment leaks of VOC were identified in Chapter 2. This chapter discusses the emission control techniques which are considered representative of reasonably available control technology (RACT) for these sources of VOC emissions. The estimated control effectiveness of each technique is also presented.

3.1 PRIMARY CONTROL METHODS

Leak detection and repair methods can be applied in order to reduce fugitive emissions from process unit sources. Leak detection methods are used to identify equipment components that are emitting significant amounts of VOC. Emissions from leaking sources may be reduced by three general methods: repair, modification, or replacement of the source. In the case of open-ended lines, however, equipment leaks are treated more effectively by installation of control equipment.

3.1.1 Individual Component Survey for Leak Detection

Each fugitive emission source (pump, valve, compressor, etc.) is checked for VOC leakage in an individual component survey. The source may be checked for leakage by visual, audible, olfactory, or instrument techniques. Visual methods are good for locating liquid leaks, especially pump seal failures. High pressure leaks may be detected by hearing the escaping vapors, and leaks of odorous materials may be detected by smell. Predominant industry practices are leak detection by visual and olfactory methods. However, in many instances, even very large VOC leaks are not detected by these methods.

Portable hydrocarbon detection instruments are the best method for identifying leaks of VOC from equipment components. The instrument is used to sample and analyze the air in close proximity to the potential leak surface by traversing the sampling probe tip over the entire area where leaks may occur. This sampling traverse is called "monitoring" in subsequent descriptions. The VOC concentration of the sampled air is

displayed on the instrument meter. The performance criteria for monitoring instruments and a description of instrument survey methods are given in Reference Method 21.

The VOC concentration at which maintenance is required is called the "action level." An action level of 10,000 ppmv is considered representative of RACT. Components which have indicated concentrations higher than this "action level" are marked for repair. Emission data indicate that large variations in mass emission rate may occur over short time periods for an individual equipment component.

3.1.2 Repair Methods

The following descriptions of repair methods include only those features of each fugitive emission source (pump, valve, etc.) which need to be considered in assessing the applicability and effectiveness of each method. They are not intended to be complete repair procedures.

3.1.2.1 Pumps. Many process units have spare pumps which can be operated while the leaking pump is being repaired. Leaks from packed seals may be reduced by tightening the packing gland. At some point, the packing may deteriorate to the point where further tightening would have no effect or possibly even increase fugitive emissions from the seal. The packing can be replaced with the pump out of service. When mechanical seals are utilized, the pump must be dismantled so the leaking seal can be repaired or replaced. Dismantling pumps may result in spillage of some process fluid causing emissions of VOC. These temporary emissions could be greater than the continued leak from the seal. Therefore, the pump should be flushed of VOC as much as possible before opening for seal replacement.

3.1.2.2 Compressors. Leaks from packed seals may be reduced by the same repair procedure that was described for pumps. Other types of seals require that the compressor be out of service for repair. Since most compressors do not normally have spares, repair or replacement of the seal would require a shutdown of the process. If the leak is small, temporary emissions resulting from a shutdown could be greater than the emissions from the leaking seal.

3.1.2.3 Safety/Relief Valves. Emissions of VOC from safety/relief valves, in general, result from leakage of the VOC around the valve seat. The leakage is most commonly attributable to improper seating of the valve, initially or after overpressure relieving. There are basically three means of eliminating VOC leaks from safety/relief valves: (1) installation of a rupture disk in the line prior to the relief valve; (2) connection of the discharge port of the relief valve to a closed vent system; and (3) use of soft seat technology such as elastomer "O-rings."

Used upstream of the safety/relief valve, a rupture disk effectively seals the process below the set pressure of the disk. When this set pressure is exceeded, the rupture disk will break, allowing the safety/relief valve to relieve the process overpressure. ASME codes[1] provide for such installations and set forth the design constraints for installing rupture disks in conjunction with relief valves. ASME codes also provide design criteria to prevent potential safety hazards from pressure building between the disk and valve.[1] For example, a pressure gauge and bleed valve installed between the disk and relief valve provide an indication of leakage around the disk and the means to relieve this pressure.

After an overpressure relief, a new rupture disk would have to be installed to reseal the system. For such an arrangement, it may be necessary to install a 3-way valve with a parallel relief valve. This would allow isolation of the rupture disk/relief valve system for disk replacement, while maintaining a backup relief valve in service. A block valve upstream of the rupture disk/relief valve system will accomplish the same purpose where safety codes allow the use of a block valve in relief valve service.

The second method that effectively eliminates VOC leaks from safety/relief valves is connection of the relief valve discharge port to a closed vent system. A closed vent system is composed of piping, connections, and, where necessary, flow-inducing devices (e.g., fans, compressors); the system transports gas or vapor to a control device such as a flare, incinerator, boiler, or process heater. In connecting a safety/relief valve to a closed vent system, any leakage of VOC through the seat of the valve will be destroyed in the control device.

The use of soft seat technology in many cases will also eliminate VOC emissions from safety/relief valves due to improper valve seating. An elastomer "O-ring" can be installed so that the valve forms a tight seal after an overpressure discharge. Soft seat technology will not, however, eliminate VOC emissions due to "simmering" (emissions resulting from operation too close to the relief valve set pressure).

3.1.2.4 Valves. Most valves have a packing gland which can be tightened while in service. Although this procedure should decrease the emissions from the valve, in some cases it may actually increase the emission rate if the packing is old and brittle or has been overtightened. Plug-type valves can be lubricated with grease to reduce emissions around the plug. Some types of valves have no means of in-service repair and must be isolated from the process and removed for repair or replacement. Other valves, such as control valves, may be excluded from in-service repair by operating procedures or safety procedures. In many cases, valves cannot be isolated from the process for removal. Most control valves have a manual bypass loop which allows them to be isolated easily, although temporary changes in process operation may allow isolation in some cases. If a process unit must be shut down in order to isolate a leaking valve, the emissions resulting from the shutdown might be greater than the emissions from the valve if allowed to leak until the next scheduled unit turnaround which permits isolation for repair.

Depending on site specific factors, it may be possible to repair process valves by injection of a sealing fluid into the source. Injection of sealing fluid has been successfully used to repair leaks from valves in petroleum refineries in California.[2]

3.1.2.5 Flanges. In some cases, leaks from flanges can be reduced by replacing the flange gaskets. Most flanges cannot be isolated to permit replacement of the gasket. Data from petroleum refineries show that flanges emit very small amounts of VOC.[3]

3.1.3 Control Effectiveness of Leak Detection and Repair Techniques

For some sources of fugitive VOC emissions, leak detection and repair programs provide an effective means of reducing the total VOC emitted. A

control efficiency of a given leak detection and repair program is dependent upon the program design and several factors associated with the program design. These factors include:

- monitoring interval;
- action level or leak definition;
- the time interval between detection of a leak and repair; and
- the emissions associated with leaking sources, nonleaking sources, successfully repaired sources, and unsuccessfully repaired sources.

Leak detection and repair programs have been modeled using a set of recursive equations to describe the behavior of fugitive emissions. The model is detailed in a technical note[4] and the development of the model is summarized in the AID.[5] Briefly, the leak detection and repair (LDAR) model examines the distribution of a class (equipment type) of fugitive emission sources in four categories:

- leaking sources (screening above the action level);
- non-leaking and successfully repaired sources (screening below the action level);
- sources that were leaking and were not successfully repaired (these sources cannot be repaired on-line and must await a turnaround for repair); and
- sources that were leaking, repaired, and exhibited early leak recurrence.

At each interval, the distribution of sources in these four categories is adjusted. The average emissions rate is then determined for the class of sources and is dependent upon this distribution in the categories since each category is assigned an emissions rate. The LDAR model presents the emissions reduction at each interval for the interval and as a time-weighted average over the entire time period since the last turnaround. The latter values are used in the analyses presented here.

The LDAR model computes the distribution considering a number of parameters. Table 3-1 lists the parameters on which the simulation results are based. Also provided in the table are the input values used in modeling leak detection and repair programs for pumps in light liquid service and valves in gas and light liquid services.

TABLE 3-1. INPUT PARAMETERS FOR LDAR MODEL[a]

Input Parameter	Values Selected		
	Pumps, Light Liquid	Valves, Gas	Valves, Light Liquid
Emission factor, kg/hr/source	0.0494	0.0056	0.007
Occurrence rate, percent	10.2	3.8	3.8
Initial leak frequency, percent	8.8	11.4	6.5
Fractional emission reduction from:			
(a) unsuccessful repair	0	0.626	0.626
(b) successful repair	0.972	0.977	0.977
Fraction of sources for which repair attempts failed	0	0.1	0.1
Fraction of repaired sources exhibiting early leak recurrence	0	0.14	0.14
Turnaround frequency, yrs.	2	2	2

[a]Selection of input parameters discussed in Reference 6.

Some of the key input values used in modeling leak detection and repair programs were the product of an EPA study of the effect of maintenance on VOC emissions from valves and pumps. The leak occurrence rates used in the LDAR model were developed based on data collected in six SOCMI process units. For valves, simple on-line maintenance techniques were the basis of the estimates for emission reduction due to unsuccessful repair, the emission reduction due to successful repair, and the fraction of maintained valves exhibiting early leak recurrence. The 29 percent success rate for attempted valve repair determined in the Maintenance Study was not used in examining the effectiveness of leak detection and repair. This low value was the result of only simple on-line maintenance techniques, such as tightening bolts and packing. Under a rule, maintenance was determined to be more effective; and, based on documented studies, a 90 percent success rate of attempted valve repair was selected.

For examination of leak detection and repair programs for pumps, all seal repair attempts were assumed to be successful. Maintenance failures were assumed to be resultant from the mechanical aspects of the pump; these problems would be treated under normal maintenance programs. The emission reduction associated with successful repair (97.2 percent) is based on the reduction from the leaking emission factor for pumps to the nonleaking emission factor for pumps (see Chapter 2 of the AID).

Using the inputs given in Table 3-1, a quarterly leak detection and repair plan was examined for valves in gas service and light liquid service; a quarterly leak detection and repair program was also considered for pumps in light liquid service. The effectiveness values for these programs are given in Table 3-2; also shown in the table are the corresponding emission reductions for the three model units.

3.1.4 Open-Ended Lines

Fugitive emissions from open-ended lines result from leakage through the seat of the valve prior to the open-ended line. Leakage of VOC to the atmosphere from open-ended lines is most effectively prevented by installation of caps, plugs, and double block-and-bleed valves downstream of the open-end. Where a double block-and-bleed arrangement is used, the upstream

TABLE 3-2. EFFECTIVENESS OF QUARTERLY LEAK DETECTION AND REPAIR

Equipment Type	Effectiveness, Percent	Emission Reduction, Per Source, kg/yr
Pumps (Light Liquid)	32.5[a]	141
Valves		
Gas	63.9[a]	31
Light Liquid	43.9[a]	27
Safety/Relief Valves (Gas)	44.2[b]	403
Compressor Seals	32.9[c]	657

[a]Effectiveness estimated using the LDAR model.

[b]Effectiveness estimated using the ABCD model adjusted with the results of the LDAR model for valves in gas service:

$$\text{Effectiveness} = \text{ABCD}_{S/RV} \times \left(\frac{\text{LDAR}_{\text{gas valves}}}{\text{ABCD}_{\text{gas valves}}}\right)$$

The effectiveness estimates using the ABCD model are presented in Reference 6.

[c]Effectiveness estimated using the ABCD model adjusted with the results of the LDAR model for pumps:

$$\text{Effectiveness} = \text{ABCD}_{\text{compressors}} \times \left(\frac{\text{LDAR}_{\text{pumps}}}{\text{ABCD}_{\text{pumps}}}\right)$$

The effectiveness estimates using the ABCD model are presented in Reference 6.

valve must be closed first to ensure product is not trapped between the two valves; expansion of trapped chemical may leak through valve stems.

The control efficiency of using these techniques depends upon valve seat leakage, frequency of valve use, and the amount of material trapped between the upstream valve and the closing device (i.e., cap, plug, second valve, etc.). To estimate the overall effectiveness of using these techniques, the annual emissions can be estimated for a leaking open-ended line that is used about ten times annually and is otherwise closed by a cap, plug, etc. A leaking open-ended line results in about 100 kg VOC emitted to the atmosphere annually.[7] Assuming that about 0.1 kg VOC is trapped between the valve and enclosing device, and all of this is lost each time the open end is operated, about 1 kg VOC would be emitted annually for the ten times the valve is used. This relates to 99 percent efficiency; but due to the conservative nature of this estimate, an efficiency of 100 percent has been used to estimate the emissions reduction attributed to closing open-ended lines.

3.2 OTHER CONTROL STRATEGIES

This section discusses two fugitive emission control strategies for valves in gas service and valves in light liquid service other than the quarterly leak detection and repair procedures discussed above. Consideration of alternative control strategies for valves is pertinent because valves account for such a large percentage of the components to be monitored (about 90 percent in the model process units). Furthermore, valve leaks in general occur slowly with gradual failure of the sealing mechanism. And the history of leak behavior for populations of valves indicates how leaks will occur in a valve population in the future. Such historical leak data permit less frequent monitoring for valve populations with a low probability of leaking in the near term. However, alternative control strategies are not pertinent for other components (pumps, compressors, safety/relief valves). These other equipment types exhibit more unpredictable failure, with failure generally being instantaneous. In addition, these other components are relatively few in number, a fact which prohibits the application of statistical sampling plans.

These strategies should be considered alternatives to quarterly leak detection and repair to allow plants the flexibility to meet a level of performance using control procedures considered most appropriate by that plant. Plants which currently have relatively few leaking valves because of good design or existing control procedures would be most likely to benefit from these strategies if they were included in regulations adopted by a State agency. Thus, these alternative control strategies might be included in State regulations as alternative standards to quarterly leak detection and repair. Before implementing one of these alternative control strategies, however, an owner or operator should be required to notify the Director of the State agency.

3.2.1 General

The emission reduction and annualized cost of a quarterly leak detection and repair program depend in part on the number of valves found leaking during inspections. Since about 90 percent of the components to be monitored in a process unit are valves, most of the cost of detecting leaks in a process unit can be attributed to valves. In general, few leaks mean VOC emissions are low. Consequently, the amount of VOC emissions that could be reduced through a leak detection and repair program and the product recovery credit associated with the program would be small. As a result, the annualized cost of a leak detection and repair program for a process unit increases as the number of leaks detected and repaired decreases.

On an individual component basis, valves have a lower emission rate than other equipment components (Table 2-2) and have a percentage leak rate which is lower than most other components. As the percent of valves found leaking decreases, the product recovery credit decreases. The direct cost for monitoring, however, remains the same because the number of valves which must be monitored remains nearly the same. Therefore, the cost effectiveness (annualized cost per megagram of emissions controlled) of a leak detection and repair program varies with the number of valves (or the percent of valves) which leak within a process unit.

Figure 3-1 presents the cost effectiveness of a quarterly leak detection and repair program for valves as a function of the initial percent

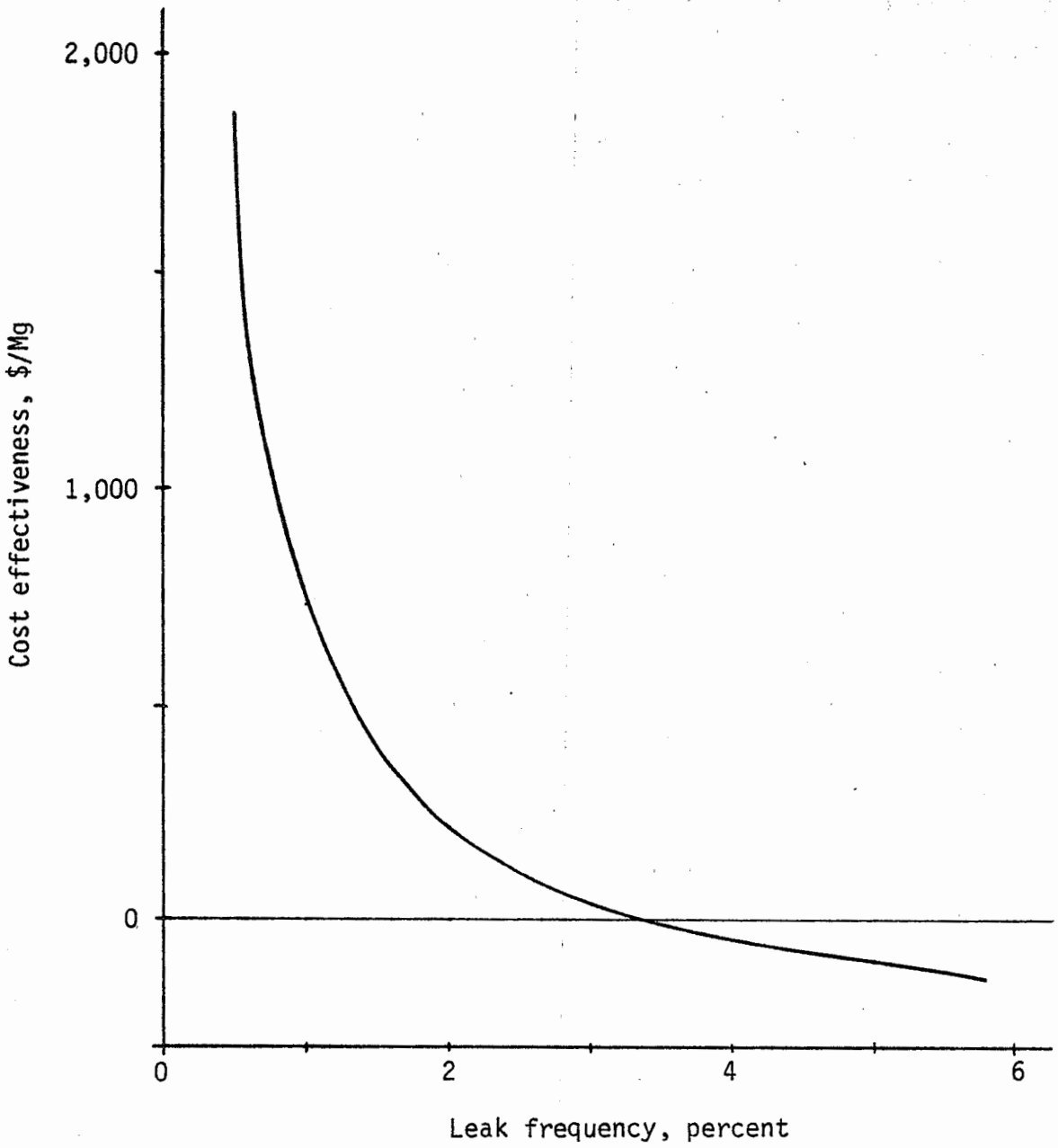

Figure 3-1. Cost effectiveness of quarterly leak detection and repair of valves with varying leak frequency - SOCMI units.

of valves found leaking. Because it is part of the cost of the overall implementation of RACT controls and is not specifically part of the valve control costs, the cost of the monitoring instrument is not included in the costs of the leak detection and repair programs represented in the figure. There is no precise breakpoint in the cost effectiveness curve shown in Figure 3-1. However, EPA judges that the cost effectiveness of quarterly leak detection and repair becomes unreasonably high at average leak frequencies less than one percent. Based on this judgement, an allowable percentage of valves leaking was determined that reflects the average of one percent of valves leaking.

A process unit averaging one percent of valves leaking will sometimes have less than one percent of valves leaking and sometimes have more than one percent leaking. Statistically, if a process unit averaged one percent of valves leaking, then the percent of valves found leaking during a random annual inspection should exceed two percent less than five percent of the time. In other words, if a random annual inspection indicated that no more than two percent of valves are leaking, the probability is greater than ninety-five percent that an average of one percent of valves leaking is actually being achieved in practice. Therefore, two percent of valves found leaking is a reasonable criterion to judge the applicability of alternative control strategies for valves.

3.2.2 Allowable Percentage of Valves Leaking

A State regulation incorporating an alternative control strategy based on an "allowable percentage of valves leaking" would require a process unit to limit the number of valves leaking at any time to a certain percentage of the number of valves to be monitored. As discussed above, it appears that two percent of valves leaking represents a reasonable performance level for an allowable percentage of valves leaking.

This type of regulation would require the owner or operator to conduct a performance test at least once a year by the applicable test method. Additional performance tests could be requested by the State. A performance test would consist of monitoring all valves in gas service and in light liquid service and of attempting to repair any valves which are leaking.

This type of regulation for valves would not affect the monitoring plans set for other types of equipment, however. The percentage of valves found leaking during the inspection (prior to attempted maintenance) would be determined by dividing the number of valves for which a leak was detected by the number of valves monitored. Valves that are not monitored because they are known to be leaking (e.g., valves that are awaiting shutdown for repair) are included as leaking valves in the total count of monitored valves. If the results of a performance test showed that the percentage of valves leaking was greater than the selected performance level of valves leaking (e.g., two percent), then the process unit would be in violation of the State regulation.

Incorporating this type of alternative control strategy in the State regulation would provide the flexibility of a performance standard. Compliance with the regulation could be achieved by the method deemed most appropriate by the plant for each process unit. The plant could implement the quarterly leak detection and repair program for valves to comply with the regulation or it could implement a program of its choosing for valves to comply with the performance level in the regulation.

3.2.3 Alternative Work Practice for Valves

A State regulation incorporating an alternative control strategy for valves based on "skip-period" monitoring would require that a process unit attain a "good performance level" on a continual basis in terms of the percentage of leaking valves. As discussed above, it appears that two percent of valves leaking represents a "good performance level."

This type of regulation would require the owner or operator to begin with implementation of a quarterly leak detection and repair program for valves. If the desired "good performance level" of two percent of valves leaking was attained for valves in gas service and light liquid service for a certain number of consecutive quarters, then one or more of the subsequent quarterly leak detection and repair periods for these valves could be skipped. This strategy is generally referred to as "skip-period" monitoring. All other equipment components would not skip monitoring intervals; they would be subject to their required monitoring intervals.

If implementation of the quarterly leak detection and repair program showed that two percent or less of the valves in gas service and valves in light liquid service were leaking for i consecutive quarters, then m quarterly inspections may be skipped. If the next inspection period also showed that the "good performance level" was being achieved, then m quarterly inspections could be skipped again. When an inspection showed the "good performance level" was not being achieved, then quarterly inspections of valves would be reinstituted. If i consecutive quarterly inspections then showed again that the good performance level was being achieved, then m quarterly inspections could be skipped again.

As mentioned above, two percent of valves leaking represents a good level of performance. Table 3-3 illustrates how a "skip-period" monitoring program might be implemented in practice. In this case, the "good performance level" must be met for five consecutive quarters (i=5) before three quarters of leak detection could be skipped (m=3). If the quarterly leak detection and repair program showed that two percent or less of the valves in gas service and valves in light liquid service in a process unit were leaking for each of five consecutive quarters, then three quarters could be skipped following the fifth quarter in which the percent of these valves leaking was less than the "good performance level." After an additional three quarters were skipped, all valves would be monitored again on the fourth quarter. This strategy would permit a process unit that has consistently demonstrated it is meeting the "good performance level" to monitor valves in gas service and valves in light liquid service annually instead of quarterly.

Another strategy would permit monitoring for two consecutive quarters and skipping to semiannual monitoring. If in two consecutive quarterly periods the good performance level of two percent (or less) of valves leaking is achieved, then a process unit could skip to semiannual monitoring with 90 percent certainty that the good performance level would be met in all periods. Using skip period monitoring, a process unit could develop and implement its own leak detection and repair procedures or install valves with lower probabilities of leaking, thereby optimizing labor and capital costs required to achieve a good level of performance.

TABLE 3-3. ILLUSTRATION OF A SKIP-PERIOD MONITORING PROGRAM[a]

Leak Detection Period	Leak Rate Of Valves During Period (%)	Quarterly Action Taken (Monitor vs. Skip)	Good Performance Level Achieved?
1	3.1	Monitor	No
2	0.8	Monitor	Yes 1
3	1.4	Monitor	Yes 2
4	1.3	Monitor	Yes 3
5	1.9	Monitor	Yes 4
6	0.6	Monitor	Yes 5[b]
7	-	Skip	- 1
8	-	Skip	- 2
9	-	Skip	- 3
10	3.8	Monitor	No 4[c]
11	1.7	Monitor	Yes 1
12	1.5	Monitor	Yes 2
13	0.4	Monitor	Yes 3
14	1.0	Monitor	Yes 4
15	0.9	Monitor	Yes 5[b]
16	-	Skip	- 1
17	-	Skip	- 2
18	-	Skip	- 3
19	0.9	Monitor	Yes 4[d]
20	-	Skip	- 1
21	-	Skip	- 2
22	-	Skip	- 3
23	1.9	Monitor	Yes 4[d]

[a] i=5, m=3, good performance level of 2 percent.

[b] Fifth consecutive quarter below 2 percent means 3 quarters of monitoring may be skipped.

[c] Percentage of leaks above 2 percent means quarterly monitoring reinstituted.

[d] Percentage of leaks below 2 percent means 3 quarters of monitoring may be skipped.

3.3 OTHER CONSIDERATIONS

This section identifies and discusses other considerations that a State agency may wish to address when drafting a regulation. These considerations include components which are unsafe or difficult to reach, small process units, and unit turnaround.

3.3.1 Unsafe and Difficult to Monitor Components

Some components might be considered unsafe to monitor because of process conditions such as extreme temperatures or pressures. A State agency may wish to require less frequent monitoring intervals for these components because of the potential danger which may be presented to monitoring personnel. For example, some valves might be monitored at times when process conditions are such that the valves are not operating under extreme temperatures or pressures as would be found in high pressure polymer reactors.

Some valves may be difficult to monitor because access to the valve bonnet is restricted or the valves are located in elevated areas. These valves might be reached by the use of a ladder or scaffolding. Valves which could be reached by the use of a ladder or which would not require monitoring personnel to be elevated higher than two meters would be monitored quarterly. However, if the monitoring of certain valves would require the use of scaffolding or would require the elevation of monitoring personnel higher than two meters above permanent support surfaces, these valves might be exempted from quarterly monitoring provided they are monitored annually.

3.3.2 Small Process Unit

Some process units have so few components to be monitored that the cost effectiveness of a quarterly leak detection and repair program for those process units would be high. A State agency may wish to consider such process units "small" and exempt them from compliance with a regulation.

The total cost of a leak detection and repair program would consist of the capital cost of VOC detection instruments and the cost of labor for leak detection and repair. The cost of VOC detection instruments would be the same for all sizes of process units, but the cost of labor for leak

detection and repair would depend on the number of components to be monitored. As the number of components to be monitored decreases, both the labor cost and the recovery credit associated with VOC emission reduction decrease. This results in a lower total cost. However, since the cost of the VOC detection instruments is fixed, a leak detection and repair program becomes less cost effective as the number of components subject to monitoring decreases.

Valves in light liquid service and valves in gas service are the greatest percentage (about 90 percent) of the components which would be subject to monitoring in a typical process unit. In addition, the number of valves in gas service and light liquid service can be used as a crude indicator of the total number of components in a process unit which would be subject to monitoring.

Table 3-4 shows the cost effectiveness for quarterly leak detection and repair of valves in process units processing small quantities of light liquid and gaseous VOC. Using the processing rates at the optional cost effectiveness cutoff levels as a guideline, States may wish to consider exempting process units designed for processing small volumes of light liquid and gaseous VOC from regulations requiring control of fugitive VOC emissions.

3.3.3 Unit Turnarounds

A State agency might wish to consider a provision in its regulations which would allow the agency Director to order an early unit shutdown for repair of leaking components in cases where the percentage of leaking components awaiting repair at unit turnaround becomes excessive. Use of such a provision, however, must be carefully considered in terms of the emissions reduction achievable and the costs to the process unit in production down-time and repair cost.

Alternative methods of treating delay of repair could also be considered by a State or local agency in reducing the cumulative number of unrepairable equipment components. For instance, delays of repair to the

TABLE 3-4. COST EFFECTIVENESS FOR QUARTERLY LEAK DETECTION AND REPAIR PROGRAMS FOR PROCESS UNITS PROCESSING SMALL VOLUMES OF LIGHT LIQUID AND GASEOUS VOC

Cost-Effectiveness ($/Mg)	Volume Light Liquid And Gaseous VOC Processed (Mg/Yr)
500	3,660
1,000	1,850
1,500	1,210
2,000	890

next scheduled process unit shutdown (or turnaround) could be allowed under circumstances where it is technically infeasible to repair the component in-place/on-line (i.e., without a unit shutdown) or where replacement parts have been depleted from once-sufficient inventory. By requiring records of delays and reasons for delays, State enforcement officers would be supplied with the data necessary to determine compliance.

3.4 REFERENCES

1. Part UG - General Requirements (Section VIII, Division I.) In: ASME Boiler and Pressure Vessel Code, An American National Standard. New York, The American Society of Mechanical Engineers, 1977. p. 449.

2. Teller, James H. Advantages Found in On-Line Leak Sealing. Oil and Gas Journal, 77 (29):54-59, 1979.

3. Wetherold, R. G., L. P. Provost, and C. D. Smith. (Radian Corporation.) Assessment of Atmospheric Emissions from Petroleum Refining, Appendix B: Detailed Results. (Prepared for U. S. Environmental Protection Agency.) Research Triangle Park, N.C. Publication No. EPA-600/2-80-075c. April 1980.

4. Williamson, H. J., et al. (Radian Corporation.) Model for Evaluating the Effects of Leak Detection and Repair Programs on Fugitive Emissions. Technical Note DCN 81-290-403-06-05-03. September 1981.

5. U. S. Environmental Protection Agency. Fugitive Emission Sources of Organic Compounds - Additional Information on Emissions, Emission Reductions, and Costs. Research Triangle Park, N.C. Publication No. EPA-450/3-82-010. April 1982.

6. Reference 5.

7. Reference 5.

4.0 ENVIRONMENTAL ANALYSIS OF RACT

This chapter discusses the environmental impacts that would result from implementing reasonably available control technology (RACT), which is presented in Section 4.1. The primary emphasis is a quantitative assessment of VOC emissions in the absence of RACT (baseline emissions) and after implementation of RACT. The impacts of RACT upon water quality, solid waste, and energy consumption are also addressed in this chapter.

4.1 REASONABLY AVAILABLE CONTROL TECHNOLOGY (RACT) PROCEDURES

Reasonably available control technology (RACT) procedures for equipment leaks of VOC in SOCMI and polymer manufacturing include capping of open-ended lines and quarterly leak detection and repair of pumps, valves, compressors, and safety/relief valves. Routine instrument monitoring of flanges, connections, and equipment in heavy liquid service is not necessary. However, any component that appears to be leaking, on the basis of sight, smell, or sound, should be repaired. In addition, difficult-to-monitor valves may require less frequent monitoring than the quarterly plan considered as RACT for valves in gas or light liquid service. Small process units (e.g., units processing small quantities of light liquid and gaseous VOC) may be exempted from implementing routine leak detection and repair programs on the basis of cost effectiveness for these small units (see Table 3-4). Other exemptions might include process units processing only heavy liquid VOC or processing only non-VOC and equipment operating under a vacuum.

Leak detection should consist of quarterly monitoring the following components in VOC service with an organic detection instrument: pumps in light liquid service, valves in light liquid service, valves in gas service, compressors, and safety/relief valves in gas service. However, states may choose monthly monitoring for pumps instead of quarterly monitoring, because the cost effectiveness ratio associated with monthly monitoring is more attractive than the cost effectiveness ratio for quarterly monitoring. Pumps in light liquid service should also be visually inspected weekly for indications of leaks. Safety/relief valves should also be monitored after each overpressure relief to ensure the valve has properly reseated.

Compressor seals should be monitored quarterly; however, some plant owners and operators may experience difficulty in reducing concentrations of organic compounds to less than 10,000 ppmv. Moreover, repair of compressor seals often necessitates a potential or complete process unit shutdown because compressors are generally not spared. Consequently, plants may find it preferable to install a compressor vent control system. However, retrofitting existing compressors with these systems may pose a safety problem. Because of the problems associated with quarterly monitoring or with installation of equipment controls in certain cases, RACT for compressors, therefore, will be determined on a case-by-case basis. The estimates of emission reductions for compressors in this chapter are based on implementing a quarterly leak detection and repair program.

The organics detection instrument and the monitoring method employed should be EPA Reference Method 21 or an equivalent State method. A source is considered leaking if monitoring results in an instrument reading of 10,000 ppmv or greater. A soap solution may be applied to certain equipment as a preliminary screening technique for leakage. A soap score equivalent to 10,000 ppmv is not specified in this guideline document because soap scoring is not applicable to all source types and because it involves a subjective evaluation of bubble formation over a specified period of time. However, states may wish to allow plant owners or operators to use the soap score method based on a correlation between soap scoring and instrument readings for sources where soap scoring is applicable. Leaking components should be repaired within 15 days of the date the leak is detected. Repair should be considered as reduction of the measured organics concentration below 10,000 ppmv. Leaking components which cannot be repaired without a unit shutdown should be repaired at the next unit turnaround.

RACT should be applicable only to components in VOC service. A component is considered in VOC service if it contains ten percent or greater VOC by weight. A VOC is any organic compound which participates in atmospheric photochemical reactions. For the purpose of this document, a light liquid is defined as a fluid with a vapor pressure greater than 0.3 kPa at 20°C. A component should be considered in light liquid service

if it contacts a fluid containing greater than ten percent by weight light liquid. A component should be considered in gas service if it contains process fluid that is in the gaseous state at operating conditions.

4.2 AIR POLLUTION

Implementation of RACT would reduce VOC fugitive emissions from process units. A significant beneficial impact on air pollution emissions would result. The hourly and annual emissions from each model unit before and after control by RACT are presented in Table 4-1. There would be no adverse air pollution impacts associated with RACT.

4.2.1 Development of VOC Emission Levels

The uncontrolled emission factors for process unit equipment were previously presented in Chapter 2 (Table 2-2). Emission factors were developed for those sources that would be controlled by the implementation of RACT. These controlled fugitive emission levels were calculated by multiplying the uncontrolled emissions from this equipment by a control efficiency. The control efficiency is determined by several factors which are described and presented in Chapter 3. The controlled VOC emission factors for each source are presented in Table 4-2.

In calculating the total fugitive emissions from model units controlled under RACT, the uncontrolled and controlled emission factors were used. These emission factors were multiplied by the equipment source inventories for each model unit.

4.2.2 VOC Emission Reduction

The emission reduction expected from the implementation of RACT can be determined for each model unit. The emission reduction is the difference between the amount of fugitive emissions before RACT is implemented and the amount of fugitive emissions after RACT is implemented. These amounts are presented in Table 4-1. The reduction in emissions for the model units after RACT would be implemented is 37 percent.

4.3 WATER POLLUTION

Implementation of RACT would result in no adverse water pollution impacts because no wastewater is involved in monitoring and leak repair.

TABLE 4-1. ESTIMATED EMISSIONS AND EMISSIONS REDUCTION ON A MODEL UNIT BASIS

Level of Control	Estimated Emissions (kg/hr) Model Unit			Estimated Emissions (Mg/yr) Model Unit			Average Percent Reduction From Uncontrolled Level
	A	B	C	A	B	C	
Uncontrolled	4.5	17.2	53.7	39	150	470	--
RACT	2.8	10.9	34.0	25	96	300	37

TABLE 4-2. EMISSION FACTORS FOR SOURCES CONTROLLED UNDER RACT

Uncontrolled Emission Source	Inspection Interval	Uncontrolled Emission Factor,[a] kg/hr	Control Efficiency[b]	Controlled Emission Factor,[c] kg/hr
Pumps				
Light Liquid Service	Quarterly	0.0494	0.33	0.0333
Valves				
Gas Service	Quarterly	0.0056	0.64	0.0020
Light Liquid Service	Quarterly	0.0071	0.44	0.0040
Safety/Relief Valves				
Gas Service	Quarterly	0.104	0.44	0.0580
Compressors	Quarterly	0.228	0.33	0.153

[a]From Table 2-2.

[b]Control efficiency estimated based on LDAR model results with inputs detailed in the AID. For compressors and safety/relief valves (gas service), the control efficiency estimates were made using results of the ABCD model adjusted with results of the LDAR model for comparable equipment types, as discussed in Section 3.1.3. References 1, 2, 3.

[c]Controlled emission factor = uncontrolled emission factor x [1 - (control efficiency)].

Some liquid chemicals may already be leaking and entering the wastewater system as runoff. A beneficial impact on wastewater would result from implementation of RACT since liquid leaks are found and repaired. This impact, however, cannot be quantified because no applicable data on liquid leaks are available.

4.4 SOLID WASTE DISPOSAL

The quantity of solid waste generated by the implementation of RACT would be insignificant. The solid waste generated would consist of used valve packings and components which are replaced.

4.5 ENERGY

The implementation of RACT calls for an emission control technique that requires no additional energy consumption for any of the model unit sizes. A beneficial impact would be experienced by saving VOC which has been heated, compressed, or pumped.

4.6 REFERENCES

1. U. S. Environmental Protection Agency. VOC Fugitive Emissions in Synthetic Organic Chemicals Manufacturing Industry - Background Information for Proposed Standards. Research Triangle Park, N. C. Publication No. EPA-450/3-80-033a. November 1980.

2. U. S. Environmental Protection Agency. Fugitive Emission Sources of Organic Compounds - Additional Information on Emissions, Emission Reductions, and Costs. Research Triangle Park, N. C. Publication No. EPA-450/3-82-010. April 1982.

3. Memorandum from Stelling, John, Radian Corporation, to SOCMI Fugitives NSPS File. March 5, 1982. 1 p. Estimated effectiveness of leak detection and repair programs for pressure relief devices.

5.0 CONTROL COST ANALYSIS OF RACT

The costs of implementing reasonably available control technology (RACT) for controlling fugitive emissions of volatile organic compounds (VOC) from process units are presented in this chapter. Capital costs, annualized costs, and the cost effectiveness of RACT are presented. These costs have been developed for the model units presented in Chapter 2. All costs presented in this chapter have been updated to second quarter 1980 dollars.

5.1 BASIS FOR CAPITAL COSTS

Capital costs represent the total cost of starting a leak detection and repair program in existing process units. The capital costs for the implementation of RACT include the purchase of VOC monitoring instruments, the purchase and installation of caps for all open-ended lines, and initial leak repair. The cost for initial leak repair is included as a capital cost because it is expected to be greater than leak repair costs in subsequent quarters and is a one-time cost.

The basis for these costs is discussed below and presented in Table 5-1. Capital cost estimates for model units under RACT are presented in Table 5-2. Labor costs were computed using a charge of $18 per labor-hour. This rate includes wages plus 40 percent for related administrative and overhead costs.[1]

5.1.1 Cost of Monitoring Instrument

The cost of a VOC monitoring instrument includes the cost of two instruments. One instrument is intended to be used as a spare. The cost of $4,600 for a portable organic vapor analyzer was obtained from a manufacturer.[2]

5.1.2 Caps on Open-Ended Lines

Fugitive emissions from open-ended lines and valves can be controlled by installing a cap, flange, or second valve to the open end. These pieces of equipment are all included in the definition of a cap for an open-ended

TABLE 5-1. CAPITAL COST DATA

Item	Cost Value Used in Analysis (June 1980 Dollars)	Cost Basis	Reference
Monitoring Instrument	2 x 4600 = 9200/model unit	One instrument used as a spare	2
Caps for Open-Ended Lines	53/line	Based on cost for 1" screw-on type valve. Cost June 1980 = $35. Installation = 1 hour at $18/hour.	3
Replacement Seal	140/seal	Based on cost of single mechanical seal, assuming 50 percent credit for old seal. June 1980 cost determined from 1978 cost of $113/seal and the ratio of indices (331.8/268.1).	4,5,6

TABLE 5-2. CAPITAL COST ESTIMATES FOR IMPLEMENTING RACT[a]
(Thousands of June 1980 Dollars)

Capital Cost Item	Model Unit Costs		
	A	B	C
1. Monitoring Instruments	9.2	9.2	9.2
2. Caps for Open-ended Lines[b]	5.5	22.0	67.9
3. Initial Leak Detection and Repair[c,d,e]	1.1	4.2	13.0
4. Initial Pump Repair Costs (Replacement Seals)[e]	0.1	0.4	1.1
Total	15.9	35.8	91.2

[a]Based on cost data presented in Table 5-1.

[b]Number of open-ended lines from Table 2-1.

[c]Initial leak detection and repair costs are treated as capital costs since they are incurred only once.

[d]Includes screening and repair labor charges.

[e]Repair costs are industry-averaged per unit and, therefore, consider fractional repairs. Equipment repair was not rounded to whole component repairs.

line. The cost of a cap for an open-ended lines is based on a cost of $35 for a one-inch screw-on type globe valve. This cost was supplied by a large distributor.[7] A charge of $18 for one hour of labor is added to $35 as the cost for installing one cap. Therefore, the total capital cost for installing a cap on an open-ended line is $53.

Caps, plugs, and blind flanges can be used at much less cost; the capital cost of installing these enclosures range from about $0.40 per plug for 1/4-inch hex head plugs to about $26 per 2-inch blind flange. Costs for 1-inch components range from about $1.20 per plug to $5.20 per cap.[8,9,10] Ninety-two percent of the open-ended lines surveyed in one study were less than 2-inches in diameter.[11] Therefore, the cost estimate of $53 per open-ended line is conservative given the prevalence of small sizes and alternative enclosing devices.

5.1.3 Initial Leak Repair

The implementation of RACT will begin with an initial inspection which will result in the discovery of leaking components. The number of initial leaks is expected to be greater than the number found in subsequent inspections. Because initial leak repair is a one-time cost, it is treated as a capital cost. The number of initial leaks was estimated by multiplying the percentage of initial leaks per component type by the number of components in the model unit under consideration. Fractions were not rounded up to the next highest integer, thus resulting in industry-averaged values. The repair time for fixing leaks is estimated to be 16 hours for a pump seal, 40 hours for a compressor seal, and 1.13 hours for a valve. The repair time for fixing compressor seals includes the cost of a new seal. These requirements are presented in Table 5-3.[12] The initial repair cost was determined by taking the product of the number of initial leaks, the repair time, and the hourly labor cost of $18.

5.1.4 Replacement Pump Seals at Initial Repair

As with the initial leak detection discussed in the previous section, the cost of initial seal replacements for pumps in light liquid service is a one-time cost and is treated as a capital cost. A replacement seal cost of $140 per seal is based on the cost of a single mechanical seal and assumes a

TABLE 5-3. LABOR-HOUR REQUIREMENTS FOR INITIAL LEAK REPAIR UNDER RACT

Source Type	Number of Components Per Model Unit			Estimated Number Of Initial Leaks[a]			Repair Time, Hours	Labor-Hours Required		
	A	B	C	A	B	C		A	B	C
Pumps (Light Liquid)	8	29	91	0.7	2.6	8.0	16[b]	11	41	128
Valves (In-Line)										
Gas	99	402	1232	11.3	45.8	140	1.13[c]	13	52	159
Light Liquid	131	524	1618	8.5	34.1	105	1.13[c]	10	38	119
Safety/Relief Valves[d] (Gas Service)	11	42	130	0	0	0	0	0	0	0
Compressor Seals	1	2	8	0.1	0.2	0.7	40[e]	4	7	29
TOTAL								38	138	435

[a]Based on the percent of sources leaking at > 10,000 ppm. Reference 13.

[b]Includes repair time for pump seals replaced in the field and not for retrofitting of packed seals with mechanical seals. Reference 13.

[c]Weighted average based on 75 percent of the leaks repaired on-line, requiring 0.17 hours per repair, and on 25 percent of the leaks repaired off-line, requiring 4 hours per repair. References 12, 14.

[d]These leaks are corrected by routine maintenance at no additional labor requirements due to safety requirements. Reference 12.

[e]Includes labor-hour equivalent cost of new seal. Reference 15.

50 percent cost credit for the seal being replaced. The number of initial leaks per model unit is the percentage of initial leaks multiplied by the number of pumps (light liquid service) in the model unit. To present industry-averaged values for each model units, the fractional repairs required were not rounded to the next integer.

5.2 BASIS FOR ANNUALIZED COSTS

Annualized costs represent the yearly cost of operating a leak detection and repair program and the cost of recovering the initial capital investment. This includes credits for product saved as the result of the control program. The basis for the annualized costs is presented in Table 5-4.

5.2.1 Monitoring Labor

The implementation of RACT requires visual and instrument monitoring of potential sources of fugitive VOC emissions. The monitoring labor-hour requirements for RACT are presented in Table 5-5. The labor-hour requirements were calculated by taking the product of the time required to monitor, the number of components in a model unit, and the number of times the component is monitored each year. The monitoring times for the various components are presented in Table 5-5. They are 0.5 man-minute for visual inspection, 2 man-minutes for valves, 10 man-minutes for pump seals, 16 man-minutes for safety/relief valves, and 20 minutes for compressor seals.[21] Monitoring labor costs were calculated based on a charge of $18 per hour.

5.2.2 Leak Repair Labor

Labor is needed to repair leaks which develop after initial repair. The estimated number of leaks and the labor-hours required for repair are given in Table 5-5. The repair time for each component is the same as presented for initial leak repair. Leak repair costs were calculated based on a charge of $18 per hour.

5.2.3 Maintenance Charges and Miscellaneous Costs

The annual maintenance charge for caps is estimated to be five percent of their capital cost.[22] The annual cost of materials and labor for maintenance and calibration of monitoring instruments is estimated to be $3,000.[23,24,25] An additional miscellaneous charge of four percent of

TABLE 5-4. BASIS FOR ANNUALIZED COST ESTIMATES

1.	Capital recovery factor for capital charges	
	- Caps on open-ended lines	0.163 x capital[a]
	- Monitoring instruments	0.23 x capital[b]
2.	Annual maintenance charges	
	- Caps on open-ended lines	0.05 x capital[c]
	- Monitoring instruments	$3,000[d]
3.	Annual miscellaneous charges (taxes, insurance, administration)	
	- Caps on open-ended lines	0.04 x capital[e]
	- Monitoring instruments	0.04 x capital[e]
4.	Labor charges	$18/hour[f]
5.	Administrative and support costs for implementing RACT	0.40 x (monitoring + repair labor)[g]
6.	Annualized charge for initial leak repairs	Σ (estimated number of leaking components per model unit x repair time)[h] x $18/hr[f] x 1.4[g] x 0.163[h]
7.	Recovery credits	$429/Mg VOC[i]

[a]Ten year life, ten percent interest. From Reference 15.

[b]Six year life, ten percent interest. From Reference 15.

[c]From Reference 15.

[d]Includes materials and labor for maintenance and calibration. Reference 15. Cost index = 247.3 ÷ 223.5 (Reference 16 and 17).

[e]From Reference 15.

[f]Includes wages plus 40 percent for labor-related administrative and overhead costs. Cost (June 1980) from Reference 1.

[g]From Reference 15.

[h]Initial leak repair amortized for ten years at ten percent interest.

[i]References 18, 19, 20. Producer price index ratio = 327.3/228.8.

TABLE 5-5. ANNUAL MONITORING AND LEAK REPAIR LABOR REQUIREMENTS FOR RACT

Source Type	Number Of Components Per Model Unit			Monitoring						Leak Repair							
				Type Of Monitoring	Monitoring Time Per Source,[a] Man-Min	Fraction Monitored	Monitoring Labor Hours Required Annually[b]			Fraction Repaired	Estimated Number Of Leaks Annually[c]			Repair Time Per Source, Man-Hr	Leak Repair Labor Hours Required Annually[d]		
	A	B	C				A	B	C		A	B	C		A	B	C
Pumps (Light Liquid)	8	29	91	Instrument	10	4	5.3	19	61	0.394	3.2	11.4	35.9	16[a]	50	183	574
				Visual	0.5	52	3.5	13	39								
Valves (Gas)	99	402	1232	Instrument	2	3.94	13.0	53	162	0.186	18.4	74.7	229	1.13[a]	21	84	259
Valves (Light Liquid)	131	524	1618	Instrument	2	3.94	17.2	69	212	0.186	24.4	97.4	301	1.13[a]	28	110	340
Safety/Relief Valves (Gas)	11	42	130	Instrument	16	4	11.7	45	139	-[e]	-[e]	-[e]	-[e]	-	-[e]	-[e]	-[e]
Compressor Seals	1	2	8	Instrument	20	4	1.3	2.7	10.7	0.394	0.4	0.8	3.2	40[f]	16	32	126
TOTAL							52	202	624						115	409	1299

[a]Reference 26, 27.

[b]Monitoring labor hours = (Monitoring time) x (Number of components) x (Fraction Monitored); the fraction monitored annually is an output of the LDAR model.

[c]Fractional leaks considered and provided as an output of the LDAR model.

[d]Leak repair labor hours = (Repair time) x (Estimated number of leaks).

[e]The occurrence of leaks from safety/relief valves is dependent upon the frequency of operation of the safety/relief valves. No estimates of required repairs have been presented; however, any leak that is detected in the absence of a RACT requirement would be repaired under normal plant maintenance practices. Reference 27.

[f]Reference 27.

capital cost for taxes, insurance, and associated administrative costs is added for the monitoring instruments and caps.

5.2.4 Administrative Costs

Administrative and support costs associated with the implementation of RACT are estimated to be 40 percent of the sum of monitoring and leak repair labor costs. The administration and support costs include recordkeeping and reporting requirement costs.

5.2.5 Capital Charges

The life of caps for open-ended lines is assumed to be ten years and the life of monitoring instruments is assumed to be six years. The cost of repair initial leaks was amortized over a ten-year period since it is a one-time cost.

The capital recovery is obtained from annualizing the installed capital cost for control equipment. The installed capital cost is annualized by using a capital recovery factor (CRF). The CRF is a function of the interest rate and useful equipment lifetime. The capital recovery can be estimated by multiplying the CRF by the total installed capital cost for the control equipment. This equation for the capital recovery factor is:

$$CRF = \frac{i(1 + i)^n}{(1 + i)^n - 1}$$

where i = interest rate, expressed as a decimal

n = economic life of the equipment, years

The interest rate used was ten percent (June 1980). The capital recovery factors and other factors used to derive annualized charges are presented in Table 5-4.

5.2.6 Recovery Credits

The reduction of VOC fugitive emissions results in saving a certain amount of VOC which would otherwise be lost. The value of this VOC is a recovery credit which can be counted against the cost of a leak detection and repair program. The recovery credits for each model unit are presented in Table 5-6. The VOC saved is valued in June 1980 dollars at $429/Mg.[28,29,30]

TABLE 5-6. RECOVERY CREDITS

Model Unit	Uncontrolled Emissions, Mg/yr	Emissions Under RACT, Mg/yr	Emission Reduction, Mg/yr	Recovered[a] Product Value, $/yr
A	39	25	14	6,200
B	151	96	55	24,000
C	470	300	170	74,000

[a]Based on an average price of $429/Mg.

5.3 EMISSION CONTROL COSTS

This section will present and discuss the emission control costs of implementing RACT for each of the three model units. Both the initial costs and the annualized costs are included.

5.3.1 Initial Costs

The cost of initially implementing RACT consists of capital costs and initial leak repair. The capital cost of $9,200 for two monitoring instruments is the same for all model unit sizes. Caps for open-ended lines will cost $5,500 for model unit A, $22,000 for model unit B, and $67,900 for model unit C. The one-time initial leak repair cost is $1,200 for model unit A, $4,600 for model unit B, and $14,100 for model unit C. The total initial capital costs for implementing RACT are $15,900 for model unit A, $35,800 for model unit B, and $91,200 for model unit C.

5.3.2 Recovery Credits

The value of VOC saved each year as a result of implementing RACT is included as an annual credit against the net annualized costs. The implementation of RACT will result in saving $6,200 worth of VOC annually in model unit A, $24,000 worth of VOC in model unit B, and $74,000 worth of VOC in model unit C.

5.3.3 Net Annualized Cost

The net annual cost for controlling emissions is the difference between the total annualized cost and the annual recovery credit for each model unit. Net annualized control cost estimates for model units under RACT are presented in Table 5-7. Capital cost data were previously presented in Table 5-1.

For model unit A, the annualized capital charges are $3,200 and the total annual operating costs are $11,500. Product recovery credits total $6,200. The net annualized cost for model unit A is $5,600.

The annualized capital charges for model unit B are $6,500 and the total annual operating costs are $28,000. The recovery credit is $24,000 per year; thus, the net annualized cost for model unit B is $4,300.

TABLE 5-7. ANNUALIZED CONTROL COST ESTIMATES FOR MODEL UNITS UNDER RACT (Thousands of June 1980 Dollars)

Cost Item		Model Unit A	Model Unit B	Model Unit C
Annualized Capital Charges				
1. Control Equipment				
a. Instrument		2.11	2.11	2.11
b. Caps		0.90	3.58	11.01
2. Initial Leak Repair		0.21	0.76	2.38
	Subtotal	3.22	6.45	15.50
Operating Costs				
1. Maintenance Charges				
a. Instrument		3.00	3.00	3.00
b. Caps		0.28	1.10	3.38
2. Miscellaneous (taxes, insurance, administration)				
a. Instrument		0.37	0.37	0.37
b. Caps		0.22	0.88	2.71
3. Replacement seals		0.24	0.88	2.77
4. Labor				
a. Monitoring labor[a]		0.94	3.62	11.23
b. Leak repair labor[b]		2.06	7.36	23.38
c. Plant and payroll overhead[c]		1.20	4.39	13.84
	Subtotal	8.31	21.60	60.68
Total Before Credit		11.53	28.05	76.18
Recovery Credits		6.19	23.76	73.88
Net Annualized Cost		5.34	4.29	2.30

[a]Sum of labor hours for monitoring in Table 5-5 multiplied by $18/hour.

[b]Sum of labor hours for leak repairs in Table 5-5 multiplied by $18/hour.

[c]Based on 40 percent of monitoring labor plus leak repair labor costs.

Model unit C has annualized capital charges of $16,500 and total operating expenses of $76,200. The recovery credit is $74,000 per year. The net annualized cost for model unit C is $2,300 for controlling fugitive VOC emissions.

5.3.4 Differences in Net Annualized Costs

The cost for RACT is different for each model unit. The cost for caps for open-ended lines varies because the number of open-ended lines is different for each model unit. Because the larger model units have more components, more labor-hours are needed for monitoring and leak repair. For this reason, labor costs will increase as model unit size increases.

5.4 COST EFFECTIVENESS

Cost effectiveness is the annualized cost per megagram of VOC controlled annually. The cost effectiveness of RACT for each model unit is the net annualized cost for implementing RACT divided by the emission reduction gained under RACT. The cost effectiveness of RACT is summarized in Table 5-8.

The implementation of RACT on model unit A results in a net annualized cost of $5,400. The emission reduction associated with RACT is 14.4 Mg/yr, resulting in a cost effectiveness of $370/Mg.

The implementation of RACT in the case of model unit B results in a net annualized cost of $4,300. The emission reduction associated with RACT is 55.4 Mg/yr and the cost effectiveness is $77/Mg.

The implementation of RACT in the case of model unit C results in a net annualized cost of $2,300. The emission reduction associated with RACT is 172 Mg/yr. Therefore, the cost effectiveness is $13/Mg.

A comparison of the cost effectiveness of RACT for each model unit reveals that cost effectiveness improves as model unit size increases. The strong influence of recovery credits and the constant charge for monitoring instruments regardless of model unit are responsible for the increase in cost effectiveness.

TABLE 5-8. COST EFFECTIVENESS FOR MODEL UNITS UNDER RACT

	Model Unit[a]		
	A	B	C
Annualized Cost Before Credit ($1000)	11.53	28.05	76.18
Annual Recovery Credit ($1000)	6.19	23.76	73.88
Net Annualized Cost ($1000)	5.34	4.29	2.30
Total VOC Reduction (Mg/yr)	14.4	55.4	172
Cost Effectiveness ($/Mg VOC)	370	77	13

[a](XXX) = net credit.

The cost effectiveness of RACT for each component type in Model Unit B is presented in Table 5-9. The cost effectiveness of RACT by component for the other model units is the same since there are no economies of scale associated with the control techniques and since the cost of the monitoring instrument is not considered for this individual component analysis. Thus, the individual cost effectiveness values by component presented in Table 5-9 for Model Unit B are the same as the by-component cost effectiveness values for other model units. The overall cost effectiveness values for the three model units differ as a result of the fixed cost for the monitoring instrument. The cost of the monitoring instrument cannot be attributed to any single type of component since all components are monitored by the instrument. Therefore, the cost for each component does not include the cost of the monitoring instrument. The cost effectiveness for RACT for pumps and compressors is higher than other components due to the additional costs required for leak repair.

TABLE 5-9. COST EFFECTIVENESS FOR COMPONENT TYPES IN MODEL UNIT B

Component	Number Of Components	Annualized Cost Before Credit ($)[a]	Annual Recovery Credit ($)	Net Annualized Cost ($)[a]	Total VOC Reduction (Mg/yr)	Cost Effectiveness ($/Mg)
Pumps (Light Liquid)[b]	29	6,670	1,750	4,920	4.08	1,200
Valves						
Gas Service	402	3,670	5,400	(1,730)	12.6	(140)
Light Liquid Service	524	4,650	6,140	(1,490)	14.3	(100)
Safety/Relief Valves	42	1,130	7,260	(6,130)	16.9	(360)
Open-ended Lines[c]	415	5,560	2,650	2,910	6.18	470
Compressors	2	890	560	330	1.31	250
TOTAL UNIT (Without Instrument Cost)	1,414	22,570	23,760	(1,190)	55.4	(21)
TOTAL UNIT (With Instrument Cost)	1,414	28,050	23,760	4,290	55.5	77

[a]Does not include cost of monitoring instrument, unless otherwise noted.

[b]The net cost associated with monthly monitoring of pumps is lower than the net cost shown for quarterly monitoring of pumps. The lower net cost associated with monthly monitoring results from higher emission reductions and, therefore, higher recovery credits. The following cost figures are applicable to monthly monitoring for pumps:

Annualized cost before credit (gross cost) ($)	=	8,439
Emission reduction (Mg/yr)	=	7.6
Annual recovery credit ($)	=	3,277
Net annualized cost ($)	=	5,162
Cost effectiveness ($/Mg)	=	680

[c]Cost for caps on lines only. Not monitored under RACT.

5.5 REFERENCES

1. Letter with attachments from Texas Chemical Council to Walt Barber, U. S. Environmental Protection Agency. June 30, 1980.

2. Purchase order from GCA/Technology Division to Analabs/Foxboro, North Haven, Connecticut. July 3, 1980.

3. Telecon. Samuel Duletsky, GCA Corporation with Dave Myer, Piedmont Hub, Greensboro, N.C. September 25, 1980. Price of 1" screw-on type valve.

4. U. S. Environmental Protection Agency. Fugitive Emission Sources of Organic Compounds - Additional Information on Emissions, Emission Reductions, and Costs. Research Triangle Park, N.C. Publication No. EPA-450/3-82-010. April 1982.

5. Economic Indicators. Chemical Engineering. Volume 86, Number 7. March 26, 1979.

6. Economic Indicators. Chemical Engineering. Volume 87, Number 21. October 20, 1980.

7. Reference 3.

8. Richardson Engineering Services, Inc. Process Plant Construction Estimating Standards, Volume 3. Solana Beach, California. 1982.

9. Economic Indicators. Chemical Engineering. Volume 89, Number 21. October 18, 1982.

10. Reference 6.

11. Memorandum from Hustvedt, K. C., U. S. Environmental Protection Agency, to SOCMI Fugitive NSPS File. January 5, 1982. 9p. Summary of HI Survey Data Compiled on 15 July 1980: Open-ended Valves (Vent, Drain, Sample) by Size.

12. Letter with attachments from J. M. Johnson, Exxon Company, U.S.A., to Robert T. Walsh, U. S. Environmental Protection Agency. July 28, 1977.

13. Reference 4.

14. State of California Air Resources Board. Emissions from Leaking Valves, Flanges, Pump and Compressor Seals, and Other Equipment at Oil Refineries. April 1978. p. V-18.

15. Environmental Protection Agency. Control of Volatile Organic Compound Leaks from Petroleum Refinery Equipment. Publication No. EPA-450/2-78-036, OAQPS No. 1.2-11. June 1978.

16. Economic Indicators. Chemical Engineering. Volume 86, Number 2. January 15, 1979.

17. Economic Indicators. Chemical Engineering. Volume 87, Number 19. September 22, 1980.

18. Reference 4.

19. Reference 5.

20. Reference 6.

21. Reference 12.

22. Reference 15.

23. Reference 15.

24. Reference 16.

25. Reference 17.

26. Reference 4.

27. Reference 12.

28. Reference 4.

29. Reference 5.

30. Reference 6.

APPENDIX A

MAJOR COMMENTS RECEIVED ON THE DRAFT CTG

APPENDIX A
MAJOR COMMENTS RECEIVED ON THE DRAFT CTG

Twenty-two comment letters were received on the August 1981 draft CTG distributed in December 1981. Some of the comments received addressed the new source performance standards (NSPS) for equipment leaks of VOC in SOCMI. These comments are considered only within the technical content of the CTG; that is, the technical aspects of the comments are considered, whereas the regulatory decisions concerning NSPS are not addressed.

In April 1982, EPA published Fugitive Emission Sources of Organic Compounds -- Additional Information on Emissions, Emission Reductions, and Costs (EPA-450/3-82-010), or AID. The AID represents EPA's current understanding of equipment leaks of VOC and contains the methodology for examining emissions, emission reductions, and costs. The AID served as the primary reference in revising cost and emission estimates presented in this document.

Out of the 22 comment letters, the following major comments were identified as having appeared several times or as having cited issues that resulted in revisions to the CTG. The comment letters are given in their entirety in Appendix B. The 20 comments identified in this appendix are addressed specifically with reference to the final CTG. The following comment areas are discussed here:

(1) Need and coverage of the CTG;
(2) Estimates of emissions, emission reductions, and costs; and
(3) RACT selection, provisions, and exemptions;

A.1 NEED AND COVERAGE OF THE CTG

Comment: Some commenters [#3; #9; #15]* said that SOCMI fugitive emissions are minor sources of VOC, and that there is, therefore, no need for the CTG. The need for the CTG was further mitigated they said, by the fact that fugitive emissions of VOC from SOCMI were already near the level EPA hopes to

achieve through control techniques outlined in Chapter 4. They based their argument on a comparison of estimates of controlled emissions based on petroleum refinery data and uncontrolled emissions based on SOCMI data.

Response: Emissions of VOC from SOCMI represent a significant source of VOC emissions to the atmosphere. EPA estimates that 540 Gg/yr of VOC (540,000 Mg/yr) of VOC are emitted to the atmosphere from all sources in SOCMI (see Table A-1). This estimate of emissions is based on detailed studies of individual process source types including air oxidation processes, distillation operations, storage operations, carrier gas processes, equipment leaks, and secondary sources. 540 Gg/yr of VOC is a significant quantity of VOC to be emitted as air pollution. This quantity is large in absolute terms and is large relative to other VOC source categories. Fugitive emissions of VOC from SOCMI are estimated to be approximately 190 Gg/yr, thus contributing a large proportion of VOC emissions within the SOCMI source category.

The commenters' comparison of emission estimates indicates confusion over the purpose for CTG's and EPA's approach in developing them. EPA's intent is not to set a regulatory goal. Rather, the intent is to provide State and local air pollution control agencies with information for determining reasonably available control technology (RACT) for specific stationary sources.

Comment: There were some comments [#7; #8; #20] received on the coverage of equipment leaks by other regulations. One commenter stated that the control techniques recommended in the CTG were already in place for vinyl chloride plants under National Emission Standards for Hazardous Air Pollutants (NESHAP). Other commenters discussed the potential overlap in regulations set forth by EPA and OSHA. One commenter said that new regulations would be redundant considering the existence of OSHA regulations. Another stated that for some chemical plants OSHA already has standards governing equipment leaks of VOC. For example, the commenter said that acrylonitrile plants are subject to strict workplace exposure limits set by OSHA.

TABLE A-1. ESTIMATES OF VOC EMISSIONS FROM SOCMI[a]

Category	Gg/yr	Percent of Total
Fugitive emissions	189	35
Distillation operations	140	26
Air oxidation processes	110	20
VOL storage operations	47	8
Carrier gas processes	32	6
Secondary & misc. emissions[b]	26	5
Revised total VOC emissions	544	100

[a]Estimates for process emission sources estimated using best available information from current standards development programs (25 October 1982). Reference 1.

[b]Secondary and miscellaneous emissions estimated as 5 percent of the total of the other sources.

Response: As discussed in Chapter 1, Control Techniques Guidelines (CTG) are designed to assist states in bringing non-attainment areas into compliance with national ambient air quality standards by providing them control technology information. Their role is distinct from that of OSHA regulations and national emission standards for hazardous air pollutants (NESHAP).

NESHAP are developed to control pollutants that are hazardous because they are carcinogens or the cause of other serious diseases. Some of the individual SOCMI chemicals have been identified as hazardous air pollutants and some SOCMI units may be affected by NESHAP regulations. However, SOCMI VOC emissions as a class have not been identified as hazardous pollutants, and therefore, are not subject to NESHAP. Therefore, there is still a need for the CTG. The CTG is consistent with both NSPS and NESHAP with respect to the equipment covered. There is no duplication of efforts required by the CTG; equipment covered by NSPS or NESHAP is exempt from the CTG since the equipment is already controlled to a higher degree under these other programs.

Many of the chemicals covered by the CTG are also listed in Table Z-1, Toxic and Hazardous Substances, in the general provisions for OSHA (29 CFR 1910.1000), and some of these chemicals are also covered by more specific health standards under OSHA. As a consequence, the CTG and the OSHA standards may affect the same equipment in VOC service. However, this possibility also does not negate the need for the CTG.

Control techniques described in the CTG serve to limit mass emission rates directly; OSHA standards for toxic chemicals generally do not. Under OSHA, control of emission sources may include substitution with less hazardous materials, process modification, worker rotation, process or worker isolation, ventilation controls, or modification of work practices. These controls reduce occupational exposures, but they do not necessarily reduce the mass rate of VOC emissions to the atmosphere. Relying on indirect controls that may or may not reduce emissions that would degrade air quality would be an unreasonable approach to reducing emissions of VOC. However, in some instances, control of emissions provided by OSHA requirements may be sufficiently effective to allow an alternative standard (e.g., percentage of valves leaking) to be met. Furthermore, the need for CTG controls can be

eliminated for certain sources under specific circumstances. For example, the quarterly monitoring requirement for a pump seal could be eliminated if the pump is equipped with dual mechanical seals with a non-VOC barrier fluid system/degassing reservoir connected to a closed vent system.

Comment: Several [#8; #13; #16; #21; #22] commenters recommended deletion of styrene-butadiene latex from the list of processes covered by the CTG. Commenters pointed out the fact that styrene-butadiene latex plants consist of fewer reactors and ancillary equipment than styrene-butadiene crumb rubber plants, although the equipment is of a similar type. Therefore, fugitive emissions should be similar in magnitude or lower. Since the crumb rubber processes were deleted from the list, it seemed appropriate to the commenters to delete the latex rubber processes.

Commenters further pointed out the fact that the production of styrene-butadiene latex is less than 15 percent of the production of styrene-butadiene crumb rubber. This comparatively low production rate was considered further justification for deleting styrene-butadiene latex from the list, since it is a small part of the total styrene-butadiene production.

Another point made in support of deleting styrene-butadiene latex was the fact that most gas valves in styrene-butadiene plants are in vacuum service, so they would not be sources of fugitive emissions.

Some commenters continued their argument that neither polymer nor resin manufacturers are similar to the chemical producers in SOCMI. Specifically, a number of commenters stated that styrene-butadiene latex plants are not like the remaining plants in SOCMI. Furthermore, the commenters said there were no styrene-butadiene plants in the SOCMI data base. The commenters, therefore, concluded that the SOCMI data base was not representative of their particular industry segment.

Response: In the August 1981 draft CTG, four categories of polymers and resins were included for coverage under this CTG: polyethylene, polypropylene, polystyrene, and styrene-butadiene latex. Other polymers and resins were dropped from consideration under the CTG for equipment leaks of VOC prior

to the distribution of the draft CTG. EPA has also removed styrene-butadiene latex from the list of affected chemicals. Thus, this CTG covers only polyethylene, polypropylene, and polystyrene from the polymers and resins category. However, in the future EPA will consider recommending RACT for equipment leaks of VOC from units producing the polymers and resins not on the final list.

The decision to drop styrene-butadiene latex from consideration at this time is not based on the inapplicability of SOCMI data or RACT to styrene-butadiene latex units. The data base presented in the AID (on which the final CTG is based) is comprised of data on equipment leaks of VOC in SOCMI. The data were collected from a variety of SOCMI process types and are considered representative of VOC emissions from equipment found in chemical and polymer plants. The data, therefore, are deemed applicable to those equipment types found in styrene-butadiene latex units. However, in order to allow further consideration of the processing equipment in various polymer and resin manufacturing units, styrene-butadiene latex (along with several other polymers and resins) are not included in the scope of this CTG.

In addition to these considerations made for polymers and resins, EPA has further evaluated coverage of the CTG since the draft document was released for comment. Methyl tert-butyl ether (MTBE) is a relatively new, high-growth organic chemical that has gained prominence as a gasoline additive, replacing lead-based additives. MTBE was not produced in large quantities commercially when the SOCMI list of organic chemicals was originally composed. Because MTBE is a large volume organic chemical with a high growth rate and because it is produced in the same synthetic organic chemical plants currently covered by the CTG, MTBE is being added to the list of organic chemicals covered by the CTG.

A.2 ESTIMATES OF EMISSIONS, EMISSION REDUCTIONS, AND COSTS

Comment: Commenters [#2; #5; #6; #7; #9; #13; #15; #16; #17; #18; #19; #20; #21; #22] objected to the application of fugitive emissions data collected in petroleum refineries to SOCMI and polymer processes. The commenters said that

fugitive emissions from SOCMI are lower in terms of both leak frequency and mass emission rate. Several reasons for the differences were given including smaller unit sizes, lower temperatures and pressures, more expensive products, more toxic products, and chemicals whose leaks are self-sealing such as polymers. They referred to fugitive emissions data generated in SOCMI as evidence of the lower emissions from SOCMI processes when compared to petroleum refineries. Commenters said that the data showed the differences between the industries and recommended the use of SOCMI data exclusively.

Commenters [#3; #5; #9; #13; #16; #17; #20; #22] further objected to the use of refinery data on technical grounds. They cited differences in calibration gases and screening instruments used in studies of the industry and differences in response factors of different chemicals as reasons that data generated in petroleum refineries should not be considered relevant to SOCMI.

Response: EPA's analysis of fugitive emissions data is extensively documented in Fugitive Emission Sources of Organic Compounds -- Additional Information on Emissions, Emission Reductions, and Costs (EPA-450/3-82-010, April 1982). As the Additional Information Document (AID)[2] relates, EPA reviewed all available fugitive emissions data from SOCMI as well as from petroleum refineries. EPA determined that the best studies on which emission estimates for SOCMI emission sources could be based were the Refinery Assessment Study[3] and the SOCMI Twenty-four Unit Study.[4] EPA considered these data sets to show differences between the SOCMI data and the petroleum refinery data. The assessment of differences and similarities between the data sets was not clearcut. There were some apparent differences, but they could not be explained conclusively. The differences may be due to factors mentioned by the commenters. It is impossible to tell because there are so many variables. It seemed illogical that on the average, identical equipment handling similar organic compounds would behave differently. However, EPA determined that the differences, as indicated by the data, were evident. Because of the differences, EPA decided that an adjustment of the emission factors used previously was warranted.

After considering alternative approaches, EPA concluded that the best method of arriving at a complete set of emission factors for equipment leaks was by using leak frequencies determined in the SOCMI 24-Unit Study to weight the emission factors determined in the Refinery Assessment Study. The resulting emission factors are presented in Chapter 2.

The technical considerations cited by the commenters refer to the monitoring instruments, calibrants, and procedures used in the different studies of fugitive VOC emissions. These considerations are examined in detail in the AID. The differences in measurement methods and response factors cited by the commenters were considered by EPA and were not found significant. The variability seen in repeat sampling of the same source was 23 percent.[5] This variability is in the same range as the 30 percent difference seen in response between the TLV-hexane system and the OVA-methane systems at the 10,000 ppmv action level.[6] Because the variability in repeat sampling is so similar to the differences in response at 10,000 ppmv, the data can be used interchangeably within ±30 percent at the action level.

Furthermore, laboratory experiments measuring variation in response factors for a number of organic chemicals indicated that 90 percent of the chemicals tested had responses between 0.1 and 10.[7,8,9] When considered in analyzing leak frequencies,[10] the response factor variation, however, did not product significant changes in the overall percent leaking estimates resulting from the SOCMI 24-Unit Study.

As presented in Section 4.1, RACT requires the use of a VOC detection instrument and monitoring method in accordance with EPA Reference Method 21 or an equivalent State method. An instrument reading of 10,000 ppmv is used as the definition of a leak. Soaping is permitted for some sources as a prescreening tool, but this technique, where applicable, must be supplemented with instrument screening if leaks are indicated using soaping. Soaping is an additional element of RACT beyond that presented in the draft CTG.

Comment: Commenters [#9; #14; #17; #19] disagreed with control efficiency estimates for leak detection and repair programs presented in the draft CTG. Referring to the ABCD model calculations, commenters said that the occurrence

and recurrence function used to derive the B-factor was not supportable and should be revised. They recommended a time series model which could be used in calculating a B-factor. They also felt that the repair effectiveness (D-factor) should be lower than the figure used in the draft CTG.

Response: The control efficiencies presented in the draft CTG for leak detection and repair programs were estimated using the ABCD model. These four factors, when taken together, considered the maximum emissions reduction potential (A) and accounted for other factors such as delay of repair (C), emissions reduction to a non-zero emissions level (D) and the occurrence and recurrence of leaks and the number of non-repairable leaks between monitoring inspections (B). Of these factors, the B-factor involved the most subjective consideration; the selection of the value for the B-factor was based on the engineering judgement that the rates for occurrence/recurrence/non-repairable leaks were non-linear with respect to monitoring interval.

The commenters are partially correct in stating that occurrence rates should be linear. Occurrence rates have been found to be essentially linear in the studies of fugitive emissions reported in the Maintenance Study.[11] In this report, the leak occurrence rate is described by an exponential distribution model and the leak recurrence rate is described by a mixed distribution model, which incorporates an exponential model to describe long-term leak recurrences. Both models are non-linear in format. But, as applied to the data collected in these studies, the models result in a nearly linear relationship with time. In fact, only slightly non-linear leak occurrence and recurrence rates for valves are noted when considering a monitoring interval of one year.

Analysis of the results of the Maintenance Study led to the development of a new model describing leak detection and repair programs. This model is described in detail in a Technical Note[12] and in the AID. The Leak Detection and Repair (LDAR) model is based on a set of recursive equations describing leaks from equipment in terms of four categories:

(1) Nonleaking equipment (screening < action level),

(2) Leaking equipment (screening $\geq$ action level),

(3) Leaking equipment which cannot be repaired on-line and are awaiting a process unit shutdown for repair, and

(4) Repaired equipment that exhibit early leak recurrence.

Three emission rates describe these four categories; a single emission rate is used to describe equipment in the last two categories listed.

In describing these various categories, the LDAR model requires more information than the ABCD model. This information includes repair effectiveness, emissions reduction for successful repair, and emissions reduction for unsuccessful repair. These data are available for pumps in light liquid service and for valves in gas and light liquid service; their selection is detailed in the AID and summarized in Chapter 3.

The LDAR model is the preferred predictor of leak detection and repair effectiveness where the detailed information is available because the resulting estimates are based on experimental data rather than engineering judgment alone. But the ABCD model remains a viable method of estimating the effectiveness of programs for equipment types for which these data are not available. To refine the ABCD estimate for such equipment types, the results of the LDAR model for comparable equipment types may be applied. For example, detailed leak occurrence and repair data have not be generated for safety/relief valves in gas service. By comparing LDAR results to ABCD results for valves in gas services, the ABCD results for safety/relief valves can be adjusted to yield a refined estimate for leak detection and repair programs applied to safety/relief valves. The AID discusses this refinement procedure for safety/relief valves in additional detail. This is the same approach taken in estimating the effectiveness of leak detection and repair for compressors.[a]

---

[a] $\text{Effectiveness}_1 = \frac{\text{ABCD}_1}{\text{ABCD}_2} \times (\text{LDAR Effectivness})_2$

For safety/relief valves in gas service, comparisons were made with results for valves in gas service. Comparisons to pumps were used to adjust ABCD results for compressors due to similarities in sealing mechanisms.

Comment: Two commenters [#9; #14] specifically cited fugitive emission testwork in supporting their comments on the occurrence rate and recurrence rate assumed in computing the control efficiency of leak detection and repair techniques. One commenter said that for valves the occurrence rate varies with the leak frequency and that the data in the SOCMI studies are biased to the high side of the leak frequency spectrum. Recurrence of leaks was estimated, according to the commenter, using an extremely sparse data set, resulting in a recurrence rate of questionable utility. To support the same claims, the other commenter cited values determined in a fugitive emission study in a high density polyethylene plant.

Response: Occurrence and recurrence of leaks was embodied in the B-factor of the ABCD model for fugitive emissions. An improved model, the LDAR model, is now the basis for estimates of emissions and emission reductions for valves and pumps operating under leak detection and repair programs. However, the LDAR model requires data which are unavailable for some other equipment types. As discussed in the previous response, the LDAR model is used in conjunction with the ABCD model for those sources (compressors, safety/relief valves).

The inputs used for occurrence and recurrence in the LDAR for pumps and valves were documented and explained in detail in the AID. EPA chose the best values available for these input parameters. Occurrence rate estimates for valves were available from two studies. First, the Maintenance Study had occurrence rate estimates developed from tests in three SOCMI processes. Estimates were presented for each type of process (vinyl acetate, cumene, and ethylene) and by service (gas, light liquid). An overall estimate for all units was also developed. Second, the Allied HDPE Study[13] presented occurrence rate estimates for valves in a high density polyethylene unit. Due to some inconsistencies noted in this study and due to the broader range of processes covered by the Maintenance Study, occurrence rates generated in the Maintenance Study were considered to be the best available estimates of occurrence rates for valves. Because the confidence intervals for the occurrence rates for individual process units showed substantial overlap (i.e., the occurrence rates for the process units were not significant

different), the overall 30-day occurrence rate of 1.3 percent was selected as an input to the LDAR model. The Maintenance Study showed that about 14 percent of all repaired valves started to leak again within 5 days of repair. The only other recurrence rate data is from the Allied HDPE Study. However, that study does not provide information for early failures. Therefore, early leak recurrence rate data from the Maintenance Study were used for input to the model.

As shown in the AID, the only occurrence rate data available for pumps are from the Maintenance Study. This occurrence rate was adjusted to account for pump seal replacement which normally occurs. The resulting 30-day occurrence rate input is 3.4 percent. Because leaking pump seals are usually taken off-line and replaced with new seals, a successful repair rate of 100 percent was used, and the early leak recurrence rate was taken as 0. The leak recurrence rate equals the leak occurrence rate.

Comment: Several comments [#3; #4; #6; #9] were received regarding the estimated costs associated with RACT requirements. Several comments concerned increased cost effectiveness estimates resultant from increased costs and decreased emission reduction estimates. One commenter stated that the capital costs estimated for RACT did not include the costs of initial survey inspections and repair. Other commenters felt that monitoring time estimates for valves were underestimated and that this time did not include preparation time and travel time between sources. Another commenter cited several causes of the "unrealistic" cost estimates: a low interest rate, a low overhead charge, and an underestimate of valve size.

Response: The costing methodology for controlling equipment leaks of VOC was reviewed in detail in the AID. Costing techniques and cost assumptions were discussed for equipment control techniques as well as for leak detection and repair programs. The methodology presented in the AID has been applied to the cost estimates presented in Chapter 5. The revised estimates of costs are higher than those presented in the draft CTG. The annualized costs of RACT for model unit B presented in Table A-2 result from use of these assumptions.

TABLE A-2. COSTS FOR COMPONENT TYPES IN MODEL UNIT B

Component	Number Of Components	Annualized Cost Before Credit ($)[a]	Annual Recovery Credit ($)	Net Annualized Cost ($)[a]	Total VOC Reduction (Mg/yr)	Cost Effectiveness ($/Mg)
Pumps (Light Liquid)[b]	29	6,670	1,750	4,920	4.08	1,200
Valves						
Gas Service	402	3,670	5,400	(1,730)	12.6	(140)
Light Liquid Service	524	4,650	6,140	(1,490)	14.3	(100)
Safety/Relief Valves	42	1,130	7,260	(6,130)	16.9	(360)
Open-ended Lines[c]	415	5,560	2,650	2,910	6.18	470
Compressors	2	890	560	330	1.31	250
TOTAL UNIT (Without Instrument Cost)	1,414	22,570	23,760	(1,190)	55.4	(21)
TOTAL UNIT (With Instrument Cost)	1,414	28,050	23,760	4,290	55.5	77

[a]Does not include cost of monitoring instrument, unless otherwise noted.

[b]The net cost associated with monthly monitoring of pumps is lower than the net cost shown for quarterly monitoring of pumps. The lower net cost associated with monthly monitoring results from higher emission reductions and, therefore, higher recovery credits. The following cost figures are applicable to monthly monitoring for pumps:

Annualized cost before credit (gross cost) ($)	=	8,439
Emission reduction (Mg/yr)	=	7.6
Annual recovery credit ($)	=	3,277
Net annualized cost ($)	=	5,162
Cost effectiveness ($/Mg)	=	680

[c]Cost for caps on lines only. Not monitored under RACT.

Also, the cost effectiveness, or the ratio of the annualized control cost to the emissions reduction achieved, is presented in Table A-3, along with the estimated control efficiency of each selected RACT. Although these costs are higher, they are reasonable costs and cost effectiveness of control.

As in the draft CTG, where leak detection and repair programs have been selected as RACT, the cost of the initial screening and repair of leaking equipment components has been capitalized. These costs are assumed to be amortized at 10 percent interest over a ten year period (a 2-year period is used for replacement seals). A six-year amortization period was used for capitalizing monitoring instruments. The 10 percent interest rate used is conservative in that it represents a real rate of return after taxes and not merely a typical interest rate.

The monitoring time estimates for valves were examined in the AID. The 2 man-minutes per valve monitoring time used was based on information provided by Exxon Company, USA.[14] It is a process unit-wide average value and is the most reasonable estimate available in the absence of data to the contrary.

The 40 percent overhead rate was found to be low by some commenters who suggested 100 percent would better reflect an overhead charge. The labor charge of $18 per hour includes a 40 percent charge for labor-related administrative and overhead costs. An additional 40 percent rate is applied to the $18 per hour rate to account for the administrative and support costs associated with implementation of RACT. These two charges taken together amount to a cumulative 96 percent total overhead charge rate.

A one-inch valve size was selected as the basis of the capital costs for control of open-ended lines. A survey of the data on which the model units were based showed that approximately 92 percent of the valves in the process units surveyed were two-inch diameter or smaller. Moreover, the one-inch valve size was used to estimate the cost of controlling open-ended lines only. The costs of controlling emissions from open-ended lines are based on installing a second valve. Plugs, caps, or blind flanges are also expected to be used to control open-ended lines; the costs of these materials are similar or less than the costs of one-inch valves. In most cases, therefore, the control cost based on these equipment would be much lower than estimated for use of a second valve.

TABLE A-3. EQUIPMENT LEAKS OF VOC FROM SYNTHETIC ORGANIC CHEMICAL AND POLYMER MANUFACTURING: RACT

Equipment Type	Control Technique	Average Control Effectiveness,[a] Percent	Average Cost Effectiveness,[b] (with credit), $/Mg
Pumps (light liquid service)	Quarterly leak detection & repair	33	1,200
Valves (gas and light liquid service)	Quarterly leak detection & repair	51	(114)[d]
Safety/relief valves (gas service)	Quarterly leak detection & repair	44	(360)[c]
Open-ended lines	Equipment	100	470
Compressors	Quarterly leak detection & repair	33	250

[a]Control effectiveness of leak detection and repair programs is based on results of LDAR model, either solely or in combination with the ABCD model results.

[b]Costs are 2Q1980 and assume $429/Mg recovery credit for VOC saved or recovered as a result of implementing the control technique.

[c]Parentheses indicate net savings resulting from the credit value of the saved/recovered VOC.

A.3 RACT SELECTION, PROVISIONS, AND EXEMPTIONS

Comment: Commenters [#4; #5; #9; #14; #19] called the 2 percent good performance level arbitrary and said that it was too low for RACT. Values offered as more realistic levels of good performance were 4 percent and 10 to 12 percent. It was also recommended that flexibility be offered plants in setting good performance levels.

Response: As discussed in previous responses and in Chapter 3, estimating the effectiveness of leak detection and repair in reducing VOC emissions resulting from equipment leaks has been facilitated for some equipment types by the LDAR model. The LDAR model has been used to examine the costs and effectiveness of leak detection and repair for valves exhibiting varying initial leak frequencies (see Section 3.2.1). As shown in Figure 3-1, the cost effectiveness of quarterly leak detection and repair for valves become unreasonable around 1 percent leaking initially in a process unit. As discussed in Chapter 3, a performance level of 2 percent leaking would ensure that most units would be achieving around 1 percent leaking. Therefore, an alternative to periodic leak detection and repair for valves could be a performance level of 2 percent leaking in a process unit.

The selection of a performance level based on the percentage of valves leaking was not a question of technical achievability of such a performance level. The selection was based on the high cost effectiveness associated with routine (quarterly) leak detection and repair of valves in model units exhibiting low leak frequency. This type of alternative standard not only allows low-leak units an exemption from routine monitoring where it is not cost-effective, but it also provides an incentive to units exhibiting higher leak frequencies to attain the performance level by means of installing better equipment or improving their current maintenance practices.

In addition, skip-period monitoring plans, discussed in Section 3.2.2, may provide another mechanism for achieving a performance level at minimal monitoring. Under such plans, monitoring requirements can be minimized for individual process units that seek to maintain a given performance level of percent of valves leaking.

Comment: One commenter [#20] stated that the CTG should relate only to photochemically reactive VOC. And priorities should be established to control only those substances determined to be photochemically reactive based on the documented differences in photodegradation rates and ozone yield of various organic compounds. Other comments [#5; #9] referred to the definition of VOC given in the proposed NSPS. One commenter stated that the definition included nonphotochemically reactive organic compounds that do not contribute to ozone formation. Another commenter felt that the definition should be clarified and rely on Reference Method 21 in determining if a compound should be considered a VOC. Moreover, he felt that the limitations of the detection instruments should be accounted for in the definition of VOC.

Response: Volatile organic compounds (VOC) are any organic compounds which participate in atmospheric photochemical reactions. At present, the Administrator has identified only the following organic chemicals as nonreactive organic chemicals:

- methane
- ethane
- 1,1,1-trichloroethane
- methylene chloride
- trichlorofluoromethane
- dichlorodifluoromethane
- chlorodifluoromethane
- trifluoromethane
- trichlorotrifluoroethane
- dichlorotetrafluoroethane
- chloropentafluoroethane

The RACT requirements discussed in this CTG are applicable to equipment that are "in VOC service," which is defined as containing at least 10 percent VOC by weight. In determining whether a piece of equipment is "in VOC service," the organic chemicals listed above as nonreactive organic compounds may be excluded from the total VOC determined by the appropriate reference methods.

The definition of "in VOC service" is a means of determining if a piece of equipment is subject to RACT requirements. Once the determination is made that a piece of equipment is "in VOC service," the requirements of RACT stand alone and do not rely on the definition of VOC.

Comment: Several commenters [#5; #9; #10; #20] took exception to the selection of 0.3 kPa as the vapor pressure breakpoint separating light liquid and heavy liquid services. They felt this selection was arbitrary and that other choices would have more relevance to the chemical industry. The commenters presented alternative choices based on:

(1) the vapor pressure at 20°C corresponding to the concentration equivalent of the leak definition (action level);
(2) the split between gasoline and kerosene (1.5 psia or 10 percent of the ASTM distillation point); and
(3) the vapor pressure at operating conditions (with light liquids defined below the vapor pressure of 760 mm Hg at operating conditions).

Response: EPA's analysis of fugitive emission rates and vapor pressures has shown that substances with vapor pressure of 0.3 kPa and higher have significant emission rates while those with lower vapor pressures are not as significant. This vapor pressure (0.3 kPa) represents the split between kerosene and naphtha and is the criterion used by EPA to distinguish between light liquid and heavy liquid substances. The split was made to concentrate effort in a leak detection and repair program on the sources with the largest potential to leak.

Comment: Various comments [#6; #18] dealt with the selection of 10,000 ppmv as the leak definition. One commenter felt 10,000 ppmv was a satisfactory leak definition for all sources, except valves in gas/vapor service. He recommended 100,000 ppmv for gas valves. Another commenter suggested that 100,000 ppmv should be used for all sources based on an improved cost

effectiveness. The commenter stated that the control efficiency of leak detection and repair techniques would be nearly the same for leak definitions of 100,000 and 10,000 ppmv. Other commenters felt that 10,000 ppmv was too low a leak definition and that the definition should be based on a mass emission rate equivalent.

Response: One consideration in selecting 10,000 ppmv as the leak definition for equipment leaks of VOC was the monitoring instrument characteristics. Data on which the CTG is based were collected using hydrocarbon detectors that are readily available. These instruments provide a direct measurement of organics concentrations up to 10,000 ppmv; in order to measure higher concentrations with the instruments most commonly used, additional care and calibration for devices such as dilution probes are required to obtain reliable results. And as a result, additional costs are associated with measuring concentrations higher than 10,000 ppmv. Although instruments that directly measure higher concentrations of organics may be available in the future, the monitoring requirements are based on the least complicated and best established portable hydrocarbon detection technique currently available.

Table A-4 presents a summary of the percent of sources screening above the action level (leak definition) for various action levels (an indication of the number of leaks) and percent of mass emissions attributable to these action levels for valves. Analysis of the results from the Maintenance Study demonstrates that a significant quantity of mass emissions would be detected with an action level of 10,000 ppmv instead of 100,000 ppmv for the SOCMI sources tested. In addition, an analysis of leak detection and repair programs based on 10,000 ppmv and 20,000 ppmv action levels indicate that improved cost effectiveness and greater emissions reduction is associated with the 10,000 ppmv program.[15] EPA sees the opportunity to control these leaks as a significant opportunity for cost-effective emission control.

Comment: The monitoring requirements of the draft guidelines were said to be overly restrictive and excessive [#3; #6; #9; #18]. Several commenters recommended annual monitoring instead of the quarterly scheme presented in the

TABLE A-4. SUMMARY OF PERCENT OF SOURCES DISTRIBUTION CURVES AND PERCENT OF MASS EMISSIONS CURVES AT VARIOUS ACTION LEVELS[a]

	Percent of Sources Screening Above[b]				Percent of Mass Emissions Attributable to Sources Screening Above[b,c]			
	10,000	20,000	40,000	100,000	10,000	20,000	40,000	100,000
Valves								
Gas								
Ethylene	15	12	10	7	94	90	84	71
Cumene	16	13	10	6	94	89	83	69
Vinyl Acetate	3.7	2.8	2.0	1.2	90	84	77	62
Light Liquid								
Ethylene	26	22	18	13	89	83	75	60
Cumene	12	9	6	4	80	71	61	45
Vinyl Acetate	0.2	0.1	0.1	0	25	16	10	4
Pump Seals								
Light Liquid								
Ethylene	30	24	18	12	96	92	86	73
Cumene	14	11	8	5	89	83	75	61
Vinyl Acetate	1.7	1.0	0.5	0.2	67	57	46	31

[a]Curves are based on models derived from data collected during 24-unit SOCMI study.

[b]Screening values in ppmv.

[c]These values were based on the original leak rate/screening value correlations presented in the Maintenance Study and have not been changed to reflect the new correlations developed in the Technical Note on the revision of SOCMI emission factors. Based on a comparison of empirical data, these values are not expected to change significantly.

draft CTG. They based their recommendation on improved cost effectiveness of an annual monitoring plan. One of these comments suggested that for valves monitoring frequency could be increased for units where annual monitoring failed to achieve an allowable percentage of valves leaking.

Response: Section 4.1 presents RACT for equipment leaks of VOC in synthetic organic chemical and polymer manufacturing plants. RACT procedures include quarterly leak detection and repair of pumps in light liquid service, valves in gas service, valves in light liquid service, safety/relief valves in gas service, and compressors. However, states may choose to implement monthly monitoring for pumps because the cost effectiveness is more attractive than the cost effectiveness for quarterly monitoring. RACT also includes installation of plugs, caps, blind flanges, etc. for open-ended lines. The environmental impacts of RACT are presented for model units in Chapter 4 and the cost impacts are given for model units in Chapter 5. The costs, emission reductions, and cost effectiveness of RACT are reasonable.

Alternative programs for monitoring valves are also allowed as RACT requirements. Under such programs, RACT can be met by meeting a performance level of 2 percent leaking in a process unit. This provision allows specific programs to be tailored to individual process units, provided an annual performance test demonstrates 2 percent or less leaking. Another alternative program for valves allows implementation of skip-period monitoring techniques; these programs are also discussed in Chapter 3. Either of these approaches has the potential to reduce monitoring frequency and cost of valve leak detection and repair in individual process units.

Quarterly leak detection and repair has also been retained as the basis of RACT for safety/relief valves in gas service (see response to comment later in this appendix) and for compressors. Since RACT applies to existing compressors, EPA believes additional provisions should be considered for compressors. Leak detection and repair may not always be an effective technique for compressors. For instance, leak detection and repair is not applicable if the compressor seal cannot be repaired below the action level

(10,000 ppmv) or cannot be repaired on-line (i.e., the seal can only be repaired during a process unit shutdown). If leak detection and repair is not applicable to an existing compressor, equipment should be installed as the control technique. An example of the equipment to be used is a mechanical seal system with a non-VOC barrier fluid and degassing reservoir connected to a control device (e.g., flare). Another example of equipment is a seal area enclosure that is vented to a control device. In some instances, neither leak detection and repair nor equipment are feasible due to prohibitive costs or safety considerations. Under these circumstances, a waiver from the RACT requirements could be considered on a case-by-case basis.

Comment: Referring to comments submitted on the NSPS, commenters [#16; #17; #21; #22] stated that emissions and emissions reduction potential were lower than presented because of the current use of flares. They cited a study of flares by Siegel to support their contention that flares can achieve 99+ percent destruction of VOC.

Response: Flares have not been presented in the CTG as a control device for destroying VOC collected from various sources. The CTG focuses on the application of leak detection and repair for reducing emissions rather than equipment. As the commenters state, however, flares are effective in eliminating VOC emissions for certain equipment types. For example, VOC emitted through the seat of a safety/relief valve are effectively eliminated if the discharge of the safety/relief valve is vented to a control device, such as a flare. Where flares are used to control VOC emissions from safety/relief valves, there is greater potential for emissions reduction from the uncontrolled leak rate than can be achieved through leak detection and repair techniques. Flares are also effective in eliminating VOC emissions from pump seals and compressor seals when used in combination with mechanical seal/barrier fluid/degassing reservoir systems. Thus, flares are allowed for control of equipment leaks from pumps, compressors, and safety/relief valves in lieu of instrument monitoring.

Comment: Commenters [#7; #9; #10; #15] noted that EPA had made allowances for inaccessible and unsafe-to-monitor valves. However, they asked that further consideration be given to exempting unsafe-to-monitor and inaccessible valves completely from periodic monitoring requirements.

Response: EPA's view is that inaccessible and unsafe to monitor valves should be monitored as often as practicable because of the potential for finding leaks and reducing emissions. EPA does not consider annual monitoring or monitoring at shutdown to be an unreasonable burden for inaccessible and unsafe to monitor valves. However, as indicated in Section 3.3.1, the difficulties of monitoring inaccessible and unsafe to monitor valves should be considered. For example, difficult-to-monitor valves might be exempted from routine quarterly monitoring provided they are monitored annually. The extent of the consideration is left to the discretion of the state and local agencies administering regulations based on leak detection and repair programs.

Comment: Two commenters [#4; #7] expressed concerns with different aspects of safety/relief valves. One commenter felt that monitoring of safety/relief valves was unwarranted since serious injury could result if a safety/relief valve should relieve while being monitored. The commenter said that such monitoring presented an undue safety hazard to personnel. Another commenter discussed the use of block valves upstream of safety/relief valve. Acknowledging their existence in the industry, the commenter stressed that such valves are typically locked open. Furthermore, in his plant, only authorized personnel could unlock this kind of block valves and the personnel must remain with the block valve until it is again locked open.

Response: EPA has examined the monitoring requirements for safety/relief valves in gas service and does not consider the quarterly monitoring requirements to be burdensome or unwarranted. Safety/relief valves are routinely inspected as a part of normal safety and maintenance procedures to ensure the set pressure is correct. The quarterly monitoring requirement of RACT may increase the frequency of this ordinary monitoring practice, but the

precautions taken during current safety/relief valve inspections are expected to be used during quarterly monitoring.

The intent of the RACT selected for safety/relief valves is to eliminate the large amounts of VOC that can be emitted through the valve if it does not seat properly after an overpressure release. Therefore, as part of any emissions reduction program for safety/relief valves, EPA believes that monitoring should follow every overpressure relief within 5 days of the relief. This is to ensure the valve has reseated properly.

EPA also considered the existence of current systems in use in the industry. For example, many safety/relief valves are already connected to closed vent systems (e.g., flare headers) for safe disposal of emergency release gases. Under such a system, there would be no required monitoring. Some process units do have block valves installed upstream of safety/relief valves, as one commenter described. While this is not recommended practice, it is an acceptable procedure under engineering standards. An improvement over this arrangement is the use of a Y-valve with parallel relief systems. This arrangement ensures a safety/relief system is in-service at all times and allows ready repair of one of the safety/relief valves.

Comment: The 15 day interval allowed for delay of repair was said to be too short, especially in those cases where repair parts had to be ordered [#4; #9]. One commenter said that 30 to 45 days should be allowed in such cases to obtain parts. And in commenting on the NSPS, commenters requested a delay in repair to the next process unit shutdown for repair where parts had to be ordered. This would provide time to obtain repair materials and to schedule maintenance work.

Response: Delay of repair for leaking sources can significantly impact emission reductions achievable under leak detection and repair programs. EPA expects most on-line/in-place repairs to be effected quickly. The requirements of RACT allows a 15-day repair interval to provide time for those technically feasible repairs to be made; a 15-day interval provides ample time for such repairs without sacrificing a large amount of emissions reduction.

For the remaining leaks that are not technically feasible on-line or in-place, delay of repair is allowed to the next process unit turnaround.

Comment: Several commenters [#6; #10; #14] objected to the statement that State enforcement officers might request a unit with an excessive numbers of leaks to shutdown before their scheduled shutdown. They said that shutdowns could cause more emissions than allowing the leaks to continue and that the shutdowns could result in excessive energy use.

Response: The intent of requesting a process unit shutdown for repair of an excessive number of leaks is to promote the use of sophisticated repair techniques (such as sealant injection) in process units with demonstrated excessive leaks. Certainly, any decision to request a process unit shutdown for repair of an excessive number of leaks prior to a scheduled shutdown must be carefully considered, taking into account the potential costs of an early shutdown. Similar provisions for early shutdown have previously been presented in a CTG model rule for petroleum refining fugitive VOC emissions (EPA-450/2-79-004).[16] In lieu of requesting an unscheduled process unit shutdown to repair an excessive number of leaks, State and local agencies may consider including specific provisions for delay of repair of various equipment types. Under this approach, a delay of repair beyond the repair interval (15 days) would only be allowed if repair is technically infeasible without a process unit shutdown and if spare parts for repair have been depleted (after being sufficiently stocked). Records of the reasons for delay of repair could then be used to aid State enforcement officers in determining compliance.

Comment: Several comments [#5; #6; #9; #12; #14; #18] were received asking for exemptions. Exemptions were requested for small production quantities, for units with few fugitive emissions sources, and for small diameter lines and valves.

Response: State and local control agencies may wish to include exemptions for plants or process units. Exemptions would most likely be designed to

prevent high cost effectiveness ratios for VOC control. As discussed in Chapter 3, such exemptions might be based on quantities of light liquid and gaseous VOC processed. An exemption based on the number of equipment components in a process unit is another possibility, but it is more appropriately addressed in terms of quantity of light liquid and gaseous VOC processed. Other suggested exemptions are for equipment in vacuum service and for process units processing only heavy liquids or non-VOC. EPA has no documentation of fugitive emission rates varying with line size. Thus, there is no justification for an exemption from monitoring requirements based on line size.

Comment: The recordkeeping and reporting requirements of the draft CTG were said to be excessive [#3; #9; #16]. Further, the time estimated to handle these tasks was found to be insufficient. One commenter felt that tagging and logging all leaks was unjustified and cost-ineffective, especially where on-the-spot repairs are successful. Another commenter, however, stated that the draft CTG did not provide any discussion of the reporting and recordkeeping requirements.

Response: EPA sees no way of implementing and administering leak detection and repair programs without some recordkeeping. The level of reporting and recordkeeping the state and local air pollution agencies will require has not been discussed in the CTG. However, an allowance was made for recordkeeping and reporting in the cost analysis.

Tagging and logging equipment that cannot be repaired on-line/in-place is an effective means of handling those components that must await a process unit shutdown for repair. Such recordkeeping is a necessary tool in establishing alternative leak detection and repair programs, such as a percent leaking requirement or a skip-period monitoring plan. Furthermore, this type of recordkeeping would be beneficial to State enforcement officers considering a request of unscheduled process unit shutdown for repair of an excessive number of leaks. For these reasons, records should be maintained of all leaks. In the case of effective on-the-spot repair, tagging is not considered productive for the quarterly leak detection and repair programs selected as RACT; for the reasons cited above, however, maintaining records is necessary.

A.4 REFERENCES

1. Memorandum from Stelling, J. H. E., Radian Corporation, to SOCMI Fugitive NSPS file. November 1, 1982. 11 p. Estimates of VOC emissions from SOCMI.

2. U. S. Environmental Protection Agency. Fugitive Emission Sources of Organic Compounds -- Additional Information on Emissions, Emission Reductions, and Costs. Research Triangle Park, N.C. Publication No. EPA-450/3-82-010. April 1982.

3. Wetherold, R. G., L. P. Provost, and C. D. Smith. (Radian Corporation.) Assessment of Atmospheric Emissions from Petroleum Refining, Appendix B: Detailed Results. (Prepared for U. S. Environmental Protection Agency.) Research Triangle Park, N.C. Publication No. EPA-600/2-80-075c. April 1980.

4. Blacksmith, J. R., et al. (Radian Corporation.) Problem Oriented Report: Frequency of Leak Occurrence for Fittings in Synthetic Organic Chemical Plant Process Units. (Prepared for U. S. Environmental Protection Agency.) Research Triangle Park, N.C. Publication No. EPA-600/2-81-003. September 1980.

5. Langley, G. J. and R. G. Wetherold. (Radian Corporation.) Evaluation of Maintenance for Fugitive VOC Emissions Control. (Prepared for U. S. Environmental Protection Agency.) Research Triangle Park, N.C. Publication No. EPA-600/52-81-080. September 1980.

6. DuBose, D. A. and G. E. Harris. (Radian Corporation.) Response Factors of VOC Analyzers to a Meter Reading of 10,000 ppmv for Selected Organic Chemicals. (Prepared for U. S. Environmental Protection Agency.) Research Triangle Park, N.C. Publication No. EPA-600/2-81-051. March 1981.

7. Reference 6.

8. Reference 6.

9. DuBose, D. A., G. E. Brown and G. E. Harris. (Radian Corporation.) Response of Portable VOC Analyzers to Chemical Mixtures. (Prepared for U. S. Environmental Protection Agency.) Research Triangle Park, N.C. Publication No. EPA-600/2-81-110. June 1981.

10. Langley, G. J., et al. (Radian Corporation.) Analysis of SOCMI VOC Fugitive Emissions Data. (Prepared for U. S. Environmental Protection Agency.) Research Triangle Park, N.C. Publication No. EPA-600/2-81-111. June 1981.

11. Reference 5.

12. Williamson, H. J., et al. (Radian Corporation.) Model for Evaluating the Effects of Leak Detection and Repair Programs on Fugitive Emissions. Technical Note DCN 81-290-403-06-05-03. September 1981.

13. Harvey, C. M. and A. C. Nelson. (PEDCo Environmental, Inc.) VOC Emission Data - High Density Polyethylene Process Unit. (Prepared for U. S. Environmental Protection Agency.) Research Triangle Park, N.C. Publication No. EPA-600/2-81-109. June 1981.

14. Letter and attachments from Johnson, J. M., Exxon Company, to Walsh, R. T., EPA:CPB. July 28, 1977. 14 p. Review of "Control of Hydrocarbon from Miscellaneous Refinery Sources" draft report.

15. Memorandum from Stelling, John, Radian Corporation, to SOCMI Fugitives NSPS File. November 1, 1982. 4 p. Cost effectiveness of leak detection and repair programs using different leak definitions.

16. Capone, S. V. and M. Petroccia. (GCA Corporation.) Guidance to State and Local Agencies in Preparing Regulations to Control Volatile Organic Compounds from Ten Stationary Source Categories. (Prepared for U. S. Environmental Protection Agency.) Research Triangle Park, N.C. Publication No. EPA-450/2-79-004. September 1979.

APPENDIX B

COMMENT LETTERS RECEIVED ON DRAFT CONTROL TECHNIQUES GUIDELINE DOCUMENT

APPENDIX B

This appendix contains letters received commenting on the draft control techniques guidelines document for fugitive emissions from synthetic organic chemical, polymer, and resin manufacturing plants. Twenty-two letters were received from industry representatives and trade groups. Table B-1 contains a listing of the commenters and their affiliations.

TABLE B-1. LIST OF COMMENTERS AND AFFILIATIONS

Comment No.	Commenter and Affiliation
1*	Mr. W. M. Reiter, Corporate Director Corporate Environmental Affairs Allied Corporation P.O. Box 2332R Morristown, New Jersey 07960 *EPA response attached.
2	Mr. Henry L. Ramm Environmental Engineer Government and Regulatory Affairs Dept. Rohm and Haas Company Independence Mall West Philadelphia, Pennsylvania 19105
3	Mr. D. E. Park, Director Environmental Affairs Ethyl Corporation P.O. Box 341 Baton Rouge, Louisiana 70821
4	Mr. J. J. Moon, Manager Environmental and Consumer Protection Division Phillips Petroleum Company Bartlesville, Oklahoma 74004
5	Mr. John T. Barr Air Products & Chemicals, Inc. Box 538 Allentown, Pennsylvania 18105
6	Mr. J. C. Edwards, Manager Clean Environment Program Tennessee Eastman Company Eastman Kodak Kingsport, Tennessee 37662
7	Mr. Allen R. Ellett, Environmental Specialist Environmental Affairs and Product Safety The Standard Oil Company Midland Building Cleveland, Ohio 44115

TABLE B-1. LIST OF COMMENTERS AND AFFILIATIONS (Continued)

Comment No.	Commenter and Affiliation
8	Mr. James W. Lewis, Manager Special Environmental Projects The BF Goodrich Company Chemical Group 6100 Oak Tree Boulevard Cleveland, Ohio 44131
9	Mr. A. H. Nickolaus Texas Chemical Council 1000 Brazos, Suite 200 Austin, Texas 78701
10	Mr. F. M. Parker, Environmental Coordinator Chevron U.S.A., Inc. 575 Market Street San Francisco, California 94105
11	Mr. H. R. Norsworthy, Manager-Manufacturing Synpol, Inc. P.O. Box 667 Port Neeches, Texas 77651
12	Mr. R. B. Tabakin, Manager Environmental Affairs American Cyanamid Company One Cyanamid Plaza Wayne, New Jersey 07470
13	Mr. E. J. Burkett, Manager Corporate Environmental Engineering The Goodyear Tire & Rubber Company Akron, Ohio 44316
14	Mr. W. F. Blank, Manager Pollution Control Corporate Environmental Affairs Allied Chemical P.O. Box 2332R Morristown, New Jersey 07960
15	Mr. Thomas V. Malorzo Senior Regulations Analyst Diamond Shamrock Corporation 717 North Harwood Street Dallas, Texas 75201

TABLE B-1. LIST OF COMMENTERS AND AFFILIATIONS (Continued)

Comment No.	Commenter and Affiliation
16	Mr. A. H. King, P.E. Environmental Consultant The Firestone Tire & Rubber Company 1200 Firestone Parkway Akron, Ohio 44317
17	Mr. R. W. Fourie, Manager Environmental Programs, Shell Oil Company One Shell Plaza P.O. Box 4320 Houston, Texas 77210
18	Mr. William P. Gulledge Manager, Environmental/Scientific Programs Chemical Manufacturers Association 2501 M Street, N.W. Washington, D.C. 20037
19	Mr. Steven A. Tasher Legal Department E.I. du Pont de Nemours & Company, Inc. Wilmington, Delaware 19898
20	Mr. C. D. Malloch Regulatory Management Director Monsanto Company 800 N. Lindbergh Boulevard St. Louis, Missouri 63166
21	Mr. Bonner L. LaFleur, Chairman Environmental Impact Committee, Southern Rubber Group P.O. Drawer 1361 Lake Charles, Louisiana 70602
22	Mr. M. J. Rhoad Managing Director International Institute of Synthetic Rubber Producers, Inc. 2077 South Gessner Road Houston, Texas 77063

12-29
12/29

#1

Allied Corporation
Corporate Environmental Affairs
P.O. Box 2332R
Morristown, New Jersey 07960

December 23, 1981

Mr. Don R. Goodwin, Director
Emission Standards and Engineering Division (MD-13)
Office of Air Quality Planning and Standards
U. S. Environmental Protection Agency
Research Triangle Park, North Carolina 27711

Dear Don:

I have just initiated review of the draft CTG entitled, "Control of Volatile Organic Compound Fugitive Emissions from Synthetic Organic Chemical, Polymer, and Resin Manufacturing Equipment."

I am somewhat disturbed, as it appears that the contributions that were made by NAPCTAC committee members and in some cases your comments apparently have been completely disregarded in the preparation of this document. I recognize that the CTG is labelled draft, however, our comments were provided many months ago. Further, the release of such a flawed document to the States and EPA Regions constructs a foundation for improper and technically unsound control assessments. I recognize that this is not a "final" document, however, the label "draft" may be lost in the pressure of permitting.

Further, the document does not use available SOCMI and Polymer plant data contributed by your contracts and industry sources (e.g. Allied Corporation). The failure to use available control techniques data is contrary to §108 of the Clean Air Act. I quote from §108(b)(1)

> "Simultaneously with the issuance of criteria under subsection (a), the Administrator shall, after consultation with appropriate advisory committees and Federal departments and agencies, issue to the States and appropriate air pollution control agencies information on air pollution control techniques, which information shall include data relating to the cost of installation and operation, energy requirements, emission reduction benefits, and environmental impact of the emission control technology. Such information shall include such data as are available on available technology and alternative methods of prevention and control of air pollution. Such information shall also include data on alternative fuels, processes, and operating methods which will result in elimination of significant reduction of emissions". (Emphasize added)

My specific concerns are as follows:

1) The document does not reflect the constructive comments made by NAPCTAC members.

2) The document does not reflect the advances made by EPA in their study of fugitive emission problems. Data collected by Radian Corporation of numerous SOCMI plants has been entirely neglected. The contribution made by Allied Corporation and other industrial firms directly to EPA and via trade organizations has not been included.

3) Our concern relative to the handling of safety valves has been disregarded. This document again supports the installation of a block valve before the safety valve, a step which could eliminate insurance coverage for the facility and more significantly, jeapordize the lives of many workers.

4) The document can be misinterpreted by the local regulator to the point where he might include flanges, agitator seals, and emissions from secondary sources such as cooling towers for control. This circumstance could arise since there is no clear and emphasized exclusion within the document. Rather there is a review of the losses from such sources with a simple caveat (difficult to find) indicating that these areas may not be covered by the CTG recommendation.

I feel that the document does not reflect a professional evaluation of the fugitive emission problem associated with polymer and organic chemical plants. Rather it is an attempt to extrapolate from refinery data. I strongly recommend that you consider withdrawing the document, or at least clearly indicating to State and Federal regulators who have received the document that the document in its present state is not to be used in formulating RACT.

I will provide chapter by chapter comment as rapidly as possible.

I am taking the liberty to share these comments with other NAPCTAC members and sollicit their comments.

Have a Merry Christmas and a Happy New Year.

Very truly yours,

Bill Reiter

W. M. Reiter
Corporate Director
Pollution Control

/pab

CC: R. O. Blosser
R. J. Castelli
F. Dubrowski
E. H. Haskell
E. E. Lemke
Dr. J. M. Lents
R. A. Moon, Jr.
W. Reilly
B. A. Steiner

UNITED ST ES ENVIRONMENTAL PROTECTION AG CY

JAN 6 1982

Mr. W. M. Reiter
Corporate Director, Pollution Control
Corporate Environmental Affairs
Allied Corporation
Post Office Box 2332R
Morristown, New Jersey 07960

Dear Bill:

In response to your letter of December 23, 1981, outlining several concerns with the draft control techniques guideline (CTG) document entitled "Control of Volatile Organic Compound Fugitive Emissions from Synthetic Organic Chemical, Polymer, and Resin Manufacturing Equipment," I would like to draw your attention to the following points. First, the draft CTG document does reflect constructive comments made by NAPCTAC members. For example, the preliminary draft CTG document discussed at the March 1981 NAPCTAC meeting included a model regulation. The NAPCTAC recommended that model regulations not be included in CTG documents; and, you will note, a model regulation is not included in the draft CTG document you received. Also, a number of the NAPCTAC members recommended that the CTG document accommodate alternative approaches to quarterly inspections for locating equipment leaks and exemptions for small process plants. Again, you will note that the draft CTG document you received accommodates skip-period monitoring and "an allowable percentage of valves leaking" as alternatives to quarterly inspections. In addition, the document accommodates exemptions for small process plants with less than a hundred valves in gas and/or light liquid service.

Second, the draft CTG document includes fugitive emission data from the synthetic organic chemical manufacturing industry (SOCMI) to the extent these data had been received, compiled, and assessed in May 1981, when the draft document was forwarded to the Office of Management and Budget for review under Executive Order 12291. Specifically, you will note that Tables A-13, A-14, and A-15 in Appendix A summarize SOCMI fugitive emission data gathered in ethylene plants, cumene plants, and vinyl acetate plants. Preliminary assessment of these data supported extrapolation from the petroleum refining industry to the SOCMI concerning fugitive emissions from process equipment.

ESED:OD:FPORTER:hh:Rm741:x5631:1/5/82

CONCURRENCES								
SYMBOL	ESD							
SURNAME	Porter							
DATE	1/5/82							

EPA Form 1320-1 (12-70) OFFICIAL FILE CO

Since May 1981, additional SOCMI fugitive emission data have been received and compiled. While we have not completed an assessment of these data, it does appear that some adjustment of various emission factors included in the draft CTG document may be warranted to reflect differences between the petroleum refining industry and the SOCMI. Currently, we plan to complete our assessment of these data over the next month or two and then publish a Federal Register notice in the spring summarizing our technical conclusions regarding fugitive emissions in the SOCMI. These conclusions will, of course, be incorporated in the final CTG document we develop.

Third, your concern relative to the handling of safety valves has not been disregarded. As I mentioned in my letter of May 12, 1981, we find a number of companies, such as Exxon and Union Oil, who routinely follow the practice outlined in the draft CTG document and we find that the ASME Boiler and Pressure Vessel Code permits this practice. In addition, I should like to point out that rather than use a block valve, one could use a three-way valve vented to a second safety relief valve. In this manner, the process would always have access to a safety relief valve.

Fourth, we do not think State or local air pollution control agencies could misinterpret the draft CTG document and include flanges, agitator seals, and cooling towers in a leak detection program. You will note, for example, that these items are not included in the recommendation for reasonably available control technology summarized on page 4-1 of the draft CTG document which states: "Leak detection should consist of quarterly monitoring the following components in VOC service with a VOC detection instrument: pumps in light liquid service, valves in light liquid service, valves in gas service, compressors, and safety/relief valves in gas service."

I have tried to indicate that we have accommodated the suggestions made by committee members and industry representatives. We may have missed some and we will review your chapter-by-chapter comments carefully when they are received.

We appreciate your in-depth review of our technical documents very much. We do our best to provide solid technical work and comments by those experienced in the design and operation of chemical plants are essential to this effort.

Best wishes for the New Year.

Sincerely yours,

Don R. Goodwin
Director
Emission Standards and
Engineering Division

bcc: R. O. Blosser
R. J. Castelli
F. Dubrowski
E. H. Haskell
E. E. Lemke
J. M. Lents
R. A. Moon, Jr.
W. Reilly
B. A. Steiner

ROHM AND HAAS COMPANY

January 8, 1982

Mr. F. Porter
U. S. Environmental Protection Agency
Office of Air Quality and Planning & Standards
Research Triangle Park, NC 27711

Dear Mr. Porter:

The Rohm and Haas Company is a member of the Chemical Manufacturers Association, and we support the CMA critique of draft documents issued for the control of volatile organic compound fugitive emission from synthetic organic chemical, polymer, and resin manufacturing equipment. As an adjunct to their review, the following comments are offered.

1. Model Regulations in Control Techniques Guidelines (CTG)

Formerly CTG's containing model regulations tended to be more of a regulatory rule than a guidance document because a state agency, not having the expertise or technical manpower available to your office, would in many cases adopt the model regulation as listed, even if it was not justified. By not including a model regulation in the August 1981 draft CTG you are bringing the document towards its intended purpose of a guidance document. The state and local agencies have the responsibility for first line control and should be encouraged to decide what level of control is necessary. We support the deletion of the model regulations section.

2. Appendix B, Tables I and II

We agree with the listing of specific chemicals in Appendix B, Table I as this explicit listng makes clear exactly what processes are referred to. However, as worded, some categories are not specific. The terms "acrylic acid and esters," "ethanolamines," phenolsulfonic acids," "polybutenes," "tetrachloroethanes," "toluenesulfonic acids," "toluidines," "trichlorobenzenes" could be construed as covering broad classes of compounds. It is requested that each compound to be covered by these rules be listed separately, i.e., "acrylic acid, ethyl acrylate, butyl acrylate, ethanolamine, diethanolamine," etc. The more general terms should be deleted.

3. Data Base for CTG Draft

The data for fugitive emissions from synthetic organic chemical plants are significantly different, and in many cases lower, than the petroleum refiners fugitive emission data base. The draft CTG should be revised using the SOCMI data base so that the document is accurate and does mislead the users to develop unneeded and unproductive emission control regualtions.

Sincerely,

H. L. Ramm
Environmental Engineer
Government and Regulatory Affairs Dept.

cm
01CM21

ETHYL CORPORATION

January 11, 1982

PLEASE ADDRESS REPLY
TO: P. O. BOX 341
BATON ROUGE, LA. 70821

Mr. F. L. Porter
Emission Standards and Engineering Division (MD-13)
Environmental Protection Agency
Research Triangle Park, North Carolina 27711

Dear Mr. Porter:

Re: Control Techniques Guideline: Volatile Organic Compound Fugitive Emissions from Synthetic Organic Chemical, Polymer, and Resin Manufacturing Equipment

The following is in response to the request for comments on the draft document (46 FR 59630).

Ethyl Corporation considers the proposed guidelines overly restrictive and excessive in record keeping, reporting and monitoring requirements. The control strategies suggested are extremely difficult to implement and enforce.

Ethyl's corporate environmental staff have carefully reviewed the revised draft of these guidelines and do not find many significant changes from the previous document. Many of the technical weaknesses of the previous draft have not been corrected.

Fugitive emissions from the Synthetic Organic Chemicals Manufacturing Industry are not of large anough magnitude to warrant such extensive documentation and control. These emissions are by nature de minimis. The guidelines propose over-regulation of these emissions.

Regulations to reduce such emissions, if necessary, should establish clear-cut objectives and specify reduction requirements. The means to achieve the reduction should be an industry decision.

The cost estimate in the guidelines is not valid. It is based on a 10 percent interest rate, which is unrealistic in the present market. The labor cost based on "wages plus 40 percent" for overhead is also low. The overhead often is 100% of wages. The total basis for valve cost is a one-inch globe valve. Many different types and sizes of valves are used

in SOCMI. The cost of a valve does not increase linearly as the size, but exponentially. Also, the majority of valves in service are larger than one inch.

We support the use of the bubble concept for emission control strategies. This concept could encompass these de minimis fugitive emissions without the excessive control proposed in the guidelines.

In considering these comments we urge EPA to modify the guidelines. As proposed, the burden of compliance on industry and enforcement is unduly excessive.

Very truly yours,

ETHYL CORPORATION

D. E. Park

D. E. Park, Corporate Director
Environmental Affairs

DEP:jht

#4

PHILLIPS PETROLEUM COMPANY

BARTLESVILLE, OKLAHOMA 74004
918 661-5956

Corporate Engineering

JOHN J MOON
Manager, Environment and Consumer Protection

January 15, 1982

Mr. Fred L. Porter (2)
Emission Standard & Engineering Division (MD-13)
Environmental Protection Agency
Research Triangle Park, NC 27711

Dear Mr. Porter:

Phillips appreciates the opportunity to comment on the draft of "Control of Volatile Organic Chemical, Polymer, and Resin Manufacturing Equipment" dated August, 1981 transmitted by your letter of December 1, 1981. After reviewing the draft our comments are as follows:

Section 2.1 - To state that the equipment in process units in the synthetic organic chemical manufacturing industry (SOCMI) is similar to equipment in the polymer and resin manufacturing industry is only partly true. The polymer and resin plants are basically quite different from the SOCMI. A SOCMI facility handles gas and/or light liquid through most of the facility while in a polymer or resin facility only a small part of the facility handles gas and/or light liquids.

Section 3.1.2.3 - Most safety/relief valves in chemical plants relieve into a vapor recovery system or into a flare system. These valves should be excluded from the monitoring requirement for volatile emissions.

If a block valve is installed up stream of a relief valve the block valve has to be locked open. Only an authorized person can unlock the block valve and he has to stay with the block valve until it is again locked open.

Section 3.1.3.3 - The allowable interval before repair of 15 days does not allow maintenance enough time if parts have to be ordered. It is suggested that 30 to 45 days would be more appropriate in these cases.

Section 3.1.3.5 - The reduction efficiency expression A x B x C x D^8 is misleading. The reference number 8 should be placed after the preceeding sentence that describes the expression.

Section 3.2.2 - The 2% allowable number of valves leaking appears to be unrealistic. Table 3-2 estimates 10% of valves in gas service and 12% of valves in light liquid service leak. Table 4-16 "Summary of Valve Maintenance Test Results" shows that only 56.4% of total valves were repaired successfully. These data would seem to indicate that 5 to 6% would be a more appropriate performance level.

Section 5.1 - The capital cost of implementing Reasonable Available Control Technology (RACT) did not include the cost of an initial survey and inspection of plant components. This survey and inspection of a large facility can be a mammoth job and very costly.

Section 5.3.2 - The amount of recovery credit for VOC saved for unit C ($211,100) does not agree with the amount stated in Table 5-7 ($216,730).

If you have questions on any of the above, please contact A. C. Oliver at (918) 661-5735.

Very truly yours,

J. J. Moon

JJM/ACO/pkc

Air Products

Air Products and Chemicals, Inc.
Box 538, Allentown, PA 18105
(215) 481-4911

11 January 1982

Mr. Fred L. Porter
Emission Standards and Engineering Div. (MD-13)
EPA
Research Triangle Park, NC 27711

Dear Mr. Porter:

We have reviewed the August 1981 draft guideline for Control of Volatile Organic Compound Fugitive Emissions for Synthetic Organic Chemical, Polymer, and Resin Manufacturing Equipment, and offer you our comments and suggestions on this draft.

This draft is a useful attempt to provide guidance to regulatory bodies which are establishing rules on fugitive emissions. It assumes that these regulations will be prepared, but it does not furnish guidance as to which type of emissions deserve priority treatment; it assumes that all emissions are equally undesirable. This is not correct. The Agency has on several occasions published documents illustrating the difference in the photodegradation rates and ozone yields of various organic substances. Therefore, it would be helpful to the agencies considering the need for regulations and the priority to be assigned to various substances to devote a section to this issue. You may remember our discussion on this point at the RTP hearing in March of last year. See Docket A-79-32.

The primary weakness of this draft is the total dependence on the similarity between the refining and the chemical industries for the data base. See pages 2-18-20. In the above-referenced docket, we have submitted comments on the disparity of the two industries. In brief, chemical plants are smaller, operate at lower temperatures and pressures, and process more valuable streams. Certainly, the size of a valve or pump has a direct effect on the rate of leakage to be expected, and thus on its effect on the environment. We realize the problems involved in obtaining representative data for such a variety of processes, but believe that the Agency should not rely totally on data from the refinery industry. You have data on many chemical operations (see the EPA-450/3-80-028 series, for example) and should attempt to apply as accurate data as possible, rather than rely on surrogates.

Along this line, we would suggest that the alternative control strategies discussed in Chapter 3 provide for an exemption from regulation based on size as well as on the number of valves and pumps. The value of a substance usually increases as the equipment size decreases. Thus, the operator has a strong economic incentive not to lose the material. A cost-effectiveness analysis would suggest that regulating efforts be concentrated on the larger potential emitters (page 3-21).

It is for these reasons that we believe that the calculations in Appendix D are overly optimistic and that the projected reductions in emissions will not be achieved on an average basis. The leak rates simply are not representative of the entire chemical industry, but of the refinery industry.

We support the concept of the skip-test procedure. We would suggest that the users of this guide need further assistance in selecting the values for the monitor-skip periods, however, there should be some discussion of how these periods are to be chosen, and some illustrations of the effects of choosing other arbitrary values of i and m.

In regard to the 2% figure as an index of compliance (page 3-17), it can be seen from table 3-2 that this value depends heavily on the service in which the equipment operates. Some flexibility should be allowed for this factor. Similarly, it would help the regulator to have some further illustrations of the quantitative effect of alternate repair times (page 3-8).

Another place where more guidance would be useful is in selecting the leak rate where a forced turnaround would be required. An inexperienced reader would conclude that a rate above 2% would justify this action. More data on average and excessive leak rates would be helpful here.

There are several other underlying factors which bear heavily on the effectiveness of this control strategy. One is the arbitrary volatility split, which may have some significance in the refinery industry, but is not relevant to the chemical industry. Another is the relative response to the various substances by the detection instrument. This wide range of sensitivities, coupled with the difference in photochemical reaction rates, produces an enormous difference in the actual emissions, and their impact on the environment, from various substances. It is not clear that a casual reader of this guide will be aware of these facts.

We hope that these comments will be useful to you as you revise this draft. The fact that the Agency apparently is choosing not to utilize conventional regulatory procedures in establishing these regulations makes it important that the guidelines be as accurate, effective, and flexible as possible.

Please call us directly if you have any questions regarding these comments and suggestions.

Very truly yours,

AIR PRODUCTS AND CHEMICALS, INC.

John T. Barr
Regulatory Response

JTB:jes

January 15, 1982

Emission Standards and Engineering
Division (MD-13)
Environmental Protection Agency
Research Triangle Park, North Carolina 27711

Attention Mr. Fred Porter

Reference: Draft (August, 1981) Control Techniques Guideline Document for the Control of Volatile Organic Compound Fugitive Emissions from Synthetic Organic Chemical, Polymer, and Resin Manufacturing Equipment

Eastman Kodak Comany is a manufacturer of photographic products, chemicals, fibers and plastics with major manufacturing facilities in seven states. As a multistate employer of approximately 100,000 people, we support the objectives of the Clean Air Act and EPA's efforts to achieve the goals of this Act. The proposed Control Techniques Guideline (CTG) could have a significant impact on our operations since Eastman Kodak Company produces many of the chemicals, polymers, and resins listed in Appendix B of the CTG. Therefore, we have the following comments on the draft Control Techniques Guideline document.

We commend EPA for making several adjustments in the draft CTG in response to previous public comments. Adjustments which we support are:

1. The exclusion of Chapter Six which contained a model regulation. The CTG is as its title implies, a guideline and not a regulation. Therefore, it is more appropriate to have state specific regulations.

2. The opportunity to apply alternative control strategies.

3. Alternate monitoring requirements for unsafe and difficult to reach components.

4. The exemption of process units with less than 100 valves in gas service and light liquid service from regulations requiring control of fugitive VOC emissions.

However, there are certain other parts in the draft (August, 1981) CTG that could be improved. For example:

1. The draft CTG uses the refining industry data to estimate Synthetic Organic Chemical Manufacturing Industry (SOCMI) uncontrolled fugitive emissions, control costs, and the proposed emission reductions. The CTG assumes fugitive emissions in the refining industry represent fugitive

EASTMAN KODAK COMPANY • KINGSPORT, TENNESSEE 37662 • 615 246-2111
Eastman Chemicals Division

emissions in SOCMI. However, in EPA contracted studies data have been obtained showing SOCMI uncontrolled fugitive emissions are much less than the refining industry uncontrolled fugitive emissions. For example, EPA's Report 600/2-81-111 entitled Analysis of SOCMI VOC Emissions Data which studies data from 24 process units in the SOCMI, reveals SOCMI fugitive emissions are substantially less than refinery fugitive emissions. The CTG should be revised to reflect the SOCMI da now available.

2. The draft CTG suggests that components which have a measurable VOC concentration of 10,000 ppmv or greater should be considered leaking components and repaired. However, the Chemical Manufacturers Association (CMA) in its comments presented on August 7, 1981, showed that the control efficiency for a 100,000 ppmv screening value for valves in gas service was more cost effective and had a control efficiency near the 10,000 ppmv screening value.

3. The draft CTG suggests a quarterly monitoring schedule. CMA's August 1981, comments showed that annual monitoring instead of quarterly monitoring only lowered the control efficiency by two percent for valv in gas service. CMA also showed that annual monitoring with a 100,000 ppmv screening value for valves in gas service could be implemented at a more reasonable cost to industry.

   Also, a report on an EPA 10-month study of fugitive emissions at an Allied Corporation high-density polyethylene unit in Baton Rouge, Louisiana, indicates that a repetitive monitoring program on a quarter or monthly basis would be far less cost effective and could exceed $20,000/Mg VOC. It was concluded that a repetitive monthly or quarter program provides no additional benefit and is not cost effective.

4. The draft CTG on Page 3-21 suggests a state agency might wish to consider a provision in their RACT regulations which would allow the agency director to order an early unit shutdown. Also on Page 4-2 the draft CTG states, "There would be no adverse air pollution impacts associated with RACT." However, early shutdowns could cause increased emissions during the shutdown process over what would occur if the process were to continue to operate. Therefore, the draft CTG should address the economic and environmental effects of early shutdowns.

5. The control cost analysis in the draft CTG used monitoring time estimates made in 1977. Appendix A on Page A-7 of the draft CTG gives an average monitoring time of 3.4 person-minutes per source for a screening program at 24 SOCMI process units. This average monitoring time for the components monitored in the SOCMI study was longer than t monitoring time estimated in 1977. Therefore, the cost analysis in th draft CTG is underestimating monitoring labor cost. The cost analysis should use the value of 3.4 person-minutes.

In summary, we suggest the following changes in the CTG:

1. An analysis of SOCMI fugitive emissions should be made rather than relying on refining industry data. Then a decision of whether a CTG is needed for SOCMI could be appropriately made. If a CTG is needed, a cost effectiveness estimate should be based on SOCMI data.

2. If a CTG is justifiable, the monitoring of valves in gas service should be performed on an annual basis with a screening value of 100,000 ppmv.

3. The draft CTG should address the economic and environmental effects of early shutdowns.

4. The cost analysis should utilize a monitoring time of 3.4 person-minutes per source.

Very truly yours,

J. C. Edwards

J. C. Edwards
Manager, Clean Environment Program
Tennessee Eastman Company
Division of Eastman Kodak Company

af

SOHIO THE STANDARD OIL COMPANY

MIDLAND BUILDING, CLEVELAND, OHIO 44115

R E FARRELL
DIRECTOR
ENVIRONMENTAL AFFAIRS
AND
PRODUCT SAFETY

January 15, 1982

Mr. Fred L. Porter
Environmental Protection Agency
Emissions Standards and Engineering
Division (MD-13)
Research Triangle Park, NC 27711

Subject: Draft CTG - Control of Volatile Organic Compound Fugitive Emissions from Synthetic Organic Chermical, Polymer, and Resin Manufacturing Equipment.

Dear Mr. Porter:

The Standard Oil Company of Ohio (Sohio) has reviewed the above cited document, and would like to submit the following comments on it.

Basis for Regulation

The guideline appears to be developed based on emission data and rates determined from the Radian survey of 13 petroleum refineries. On page 2-20, it says that the operation of SOCMI process equipment is not expected to differ greatly from refinery operations, so emissions would be expected to be simlar. We feel that this is not the case. The data summarized in Appendix A shows that in most cases the percentage of leaking sources in chemical plants is much less than the percentage of leaking sources in a petroleum refinery. (See table A-1, page A-13.) It is our opinion that this table identifies enough difference to change the economics significantly.

Emissions from chemical plants will vary depending on the chemical feedstocks and products. Some plants, such as acrylonitrile plants currently have very strict work place limits under OSHA, and hence must be careful to repair leaks to avoid high worker exposure. Other plants produce chemicals which tend to polymerize, and "self seal" small leaks. Based on these considerations chemical plants are not similar to petroleum refineries and should not be regulated as such.

. Pump Seal Requirements

Double mechanical seals are not feasible on all pumps in a chemical plant, as the barrier fluid will contaminate the process stream if the seal leaks. Tandem seals (double mechanical seals in which the barrier fluid is not under pressure) are allowed if the seal oil is degassed and incinerated. This is a very costly approach, because it is doubtful if enough seals will be leaking at any given time to support combustion. Therefore, the incinerator would have to continuously fire alternate fuel. Significant amounts of other gasseous air pollutants (SO_X, NO_X, TSP) would be generated to control a rather insignificant amount of hydrocarbons. We feel that this requirement should be eliminated based on cost and these other environmental impacts.

. Relief Valves

The guideline mentions monitoring relief valves. This poses a health and safety hazard to the monitoring team, as if a valve were to relieve as a team was monitoring it, serious injury may result. This may happen at any time, since these valves are designed to automatically vent during upset or overpressure events. We feel that any attempt to require monitoring safety valves is unwarranted, and these references should be removed from the guideline.

. Flanges

Flanges are not a source of leaks. This has been shown in both refinery and chemical plant surveys. Any reference to monitoring these should be removed from the guidelines.

. Inaccessible Sources

The guideline mentions that some sources in a chemical plant are inaccessible, and should not have to be monitored as frequently as accessible sources. We feel that it is dangerous to be standing on a ladder while monitoring inaccessible valves, and that it would also take appreciably more time to monitor these sources than the normally accessible sources. This would seriously impact the economics of the requirement to monitor these sources at all. We would recommend removing the requirement that these sources be monitored.

. Use of Draft Reports

In Chapter 2 references 1, 30, and 40, Chapter 3 reference 3, Chapter 4 reference 2, and Chapter 6 reference 5 are all draft reports. If these reports were never issued as final reports, they should not be quoted in a document that will be used to develop regulations. The use of these documents creates a "house of cards" on which the regulations will be based.

Sohio appreciates this opportunity to comment on this draft guideline. If you have any questions concerning these comments, please contact me at (216) 575-5136.

Sincerely,

Allen R. Ellett

Allen R. Ellett
Environmental Specialist

ARE/dmb

The BFGoodrich Company
Chemical Group
6100 Oak Tree Boulevard
Cleveland, Ohio 44131
216-447-6000

#8

January 11, 1982

Emission Standards and Engineering Division (MD-13)
U. S. Environmental Protection Agency
Research Triangle Park, North Carolina 27711

Attention: Mr. Fred Porter

Dear Mr. Porter:

Re: Draft CTG Document: Control of VOC Fugitive Emissions from Synthetic Organic Chemical, Polymer, and Resin Manufacturing Equipment, August, 1981

We appreciate the opportunity to comment on the subject document. We respectfully submit these comments pursuant to your letter of December 1, 1981 and the Federal Register notification of December 7, 1981.

Our comments are directed to Page B-6 of Appendix B, List of Chemicals Defining Synthetic Organic Chemical, Polymer and Resin Manufacturing Industries. We request that the following chemicals be deleted from this list:

Table I: Synthetic Organic Chemicals Manufacturing Industry

OCPDB No.	Chemical
3520	Vinyl Chloride

Table II: Polymer and Resin Manufacturing Industry

Styrene-Butadiene Latex

For vinyl chloride, this request is based upon the fact that fugitive emissions from this process are already regulated by the National Emission Standard for Hazardous Air Pollutants - Vinyl Chloride, 40 CFR 61.65 (b). The fugitive emissions from the vinyl chloride process are already stringently controlled and all the controls listed in the subject support document are already in place. Therefore, no further control can be expected by application of the RACT controls contained in the subject document. The potential duplication of reporting would be burdensome and and serve no purpose.

For styrene-butadiene latex, our request is based upon the small potential for VOC fugitive emission reductions and associated costs for this small reduction. We assume the only reason styrene-butadiene latex is still listed in Table II is because the Agency was developing a CTG document for this process. We base this assumption on the fact that styrene-butadiene

copolymers were listed in the January, 1981, draft fugitive guideline document.

At that time, both styrene-butadiene crumb rubber and styrene-butadiene latex were included in the CTG document "Control of Volatile Organic Compound Emissions from Manufacture of Styrene-Butadiene Copolymer". However, the SBR crumb rubber category was dropped from the document pursuant to our testimony at the April 29, 1981 National Air Pollution Control Technique Advisory Committee (NAPCTAC) meeting. The additional controls were not cost effective.

Fugitive emissions associated with the styrene-butadiene latex manufacture are from styrene unloading/charging pumps, butadiene unloading/charging pumps, and flanges and valves in the liquid lines between the storage tanks and the reactors. These emissions are similar to the emissions from the emulsion crumb rubber process. We believe, therefore, that the Agency should eliminate styrene-butadiene latex since styrene-butadiene crumb rubber was deleted from the category and the fugitive emissions from the two processes are similar.

Sincerely,

THE BFGOODRICH COMPANY
CHEMICAL GROUP

James W Lewis

James W. Lewis
Manager, Special Environmental
Projects

JWL/des

TEXAS CHEMICAL COUNCIL
1000 BRAZOS, SUITE 200, AUSTIN, TEXAS 78701-2476, (512) 477-4465

January 15, 1982

Emission Standards and Engineering Division (MD-13)
Environmental Protection Agency
Research Triangle Park, North Carolina 27711

Attention: Fred Porter (2)

RE: Comments On The Draft CTG:
Fugitive Emissions From Synthetic
Organic Chemical, Polymer & Resin
Manufacturing Equipment
46 FR 59630, December 7, 1981

Dear Mr. Porter:

Attached are the Texas Chemical Council's comments on the subject fugitive emission control guideline.

Sincerely Yours,

A. H. Nickolaus

A. H. Nickolaus
Chairman, CTG Subcommittee

CC: J. S. Matey - CMA
P. J. Sienknecht - Dow
J. D. Martin - Union Carbide
J. B. Cox - Exxon
Roger Wallis - TACB
Air Policy Committee
TCC Files

AHN/rtg

Attachments

COMMENTS BY THE TEXAS CHEMICAL COUNCIL

ON THE

DRAFT CONTROL TECHNIQUE GUIDELINE (CTG)

FOR THE CONTROL OF VOLATILE ORGANIC COMPOUND FUGITIVE EMISSIONS

FROM SYNTHETIC ORGANIC CHEMICAL, POLYMER & RESIN MFG. EQUIPMENT, DATED AUGUST 1981

The Texas Chemical Council (TCC) is an association of 85 chemical companies having more than 67,000 employees in Texas and representing approximately 90% of the chemical industry in the state. Thus the draft CTG for the control of volatile organic compound (VOC) fugitive emissions is of vital concern to us.

The draft CTG does not fulfill its stated purpose (Chapter 1) to "review existing information and data concerning technology and costs for fugitive emission control in the Synthetic Organic Chemical Industry (SOCMI)". It is based on data from petroleum refineries and does not incorporate the SOCMI data (Ref. 1-8) developed specifically for this purpose. These SOCMI data show:

- Leak frequencies and rates in the chemical industry are different from, and significantly less than, petroleum refining so the proposed control strategies are largely inappropriate.
- "Uncontrolled" emission levels are sufficiently close to the controlled levels sought by the EPA so that a CTG may be unnecessary.
- The cost of emission control is greatly understated.

Thus the draft CTG needs extensive revision to make it accurate and technically sound.

Most of the deficiencies in this document have been discussed in the previous TCC comments listed in Table 1. The discussion following summarizes and/or references those that are especially pertinent. Since extensive reference is made to our July 27, 1981 comments (Ref. 17) on the SOCMI studies, a copy of them is attached (see Attachment 1). Also, reference numbers 1 through 16 in this letter have been kept the same as those in our July 27th comment to help avoid confusion.

I. Why The CTG Should Be Redone

The EPA's approach to fugitive emission control is based on certain key conditions and suppositions. Several of these are not in agreement with the facts developed in the SOCMI studies. The differences and consequences are discussed in Attachment 1. Also see page two of Ref. 10 and pages 25-29 of Ref. 11 for a further discussion of screening values relative to the definition of a leak.

In addition to the comments already made, we continue to be puzzled by the data shown in Figure 3-7 of the Maintenance Study (Ref. 1) in which a control sample group of 60 valves actually decreased in emission rate over a median 77 day period. This is contrary to the EPA's theory of leak occurrence, and we would appreciate an explanation.

We have also reviewed the High-Density Polyethylene Plant data (Ref. 8) and in addition to concluding that more frequent inspection and monitoring did not reduce the percentage of valves leaking (Ref. 17), we note the percentage of valves leaking is high also. These data indicate a good performance level of 2% of valves leaking is too stringent for RACT (See Figure 1).

We believe the discussion in Attachment 1 gives ample reason for redoing this CTG. We note that although the SOCMI Screening Study (Ref. 2) was published in September 1980, the SOCMI Maintenance Study (Ref. 1) in May 1981, and the Analysis Study (Ref. 3, 6, 7) in June 1981, not one SOCMI data point was used in this draft CTG published in August 1981 to estimate SOCMI emissions, to develop a SOCMI control strategy, or to estimate SOCMI control costs. The latest references in Chapters II and III are 1979. The CMA and TCC comments in March 1981 on the preliminary draft CTG were almost completely ignored.

If model plants are to be used, a set more representative of SOCMI should be developed. These should give greater consideration to a wide range of leak frequencies and to the relationships summarized on page 5 of Ref. 3, 6, and 7. Contrary to the statement in Par. 2.3.1 of the CTG the model units do not represent different levels of process complexity. Each contains the same components in almost the same ratios; the only difference is in the numbers of each. Further, in Table II-3 of the reference they are based on (Ref. 1 in Chapter 2), Model Units A, B, and C are identified as Small, Medium, and Large Model Plants.

II. Is A CTG Needed?

In Reference 18 the CMA estimated that SOCMI emissions based on SOCMI data are probably less than 30% of EPA's estimate based on petroleum refinery data. Their comments on this are quoted on the following page, and their complete submission is attached (Attachment II) for your review.

"Using the data from Table I we calculated a SOCMI emissions total of 55 gg/yr. However, the BID using refinery data estimated SOCMI fugitive emissions of 200 gg/yr. This further confirmed previous CMA assertions that SOCMI emissions are approximately 30 percent of the refinery emissions. This is true, even though emissions are calculated using only data from the "high leak" processes -- ethylene, vinyl acetate and cumene. The actual SOCMI industry is in large part comprised of "low" and "non-leak" processes. Of the approximately 1,000 SOCMI plants in the data base, the ethylene and cumene plants represent less than 5 percent of the total number.'

'If emissions were calculated using a true mix of the plants, including "low" and "non-leak" processes, the SOCMI emissions would be considerably below 55 gg/yr. In fact, the uncontrolled SOCMI emissions might well approach EPA's proposed regulatory goal of 26 gg/yr. We conclude the present uncontrolled fugitive emissions from SOCMI are de minimis. The data from these reports demonstrate no real need for the NSPS or the CTG."

The TCC agrees with CMA's conclusions, and we urge the EPA to seriously reappraise the need for this CTG.

III. Control Costs Are Greatly Underestimated

The analysis of RACT control costs in Chapter 5 greatly underestimate them. Using screening times and leak rates based on SOCMI data in Reference 2 we estimate the minimum cost of EPA's proposed program for Model Unit B to be $980/Mg VOC instead of a $247/Mg credit - a difference of $1227/Mg. Details and basis for our estimate are shown in Table 2.

IV. Comment On EPA's RACT Recommendations

In Chapters 3 and 4 the CTG makes various recommendations of what they consider to be reasonably available control technology (RACT). The TCC believes that in many if not most cases existing SOCMI maintenance and operating practices result in emission levels equal to or better than EPA's proposed program. For this reason any RACT recommendation the EPA makes should allow these practices to continue. The TCC also believes that differences between the SOCMI data in References 1 through 8 and the basis used by the EPA in developing their proposed control strategy are such that the whole strategy should be re-analyzed. However, we are pessimistic about this being done, so our comments and recommendations following are intended to make the best of what the EPA has recommended, not to endorse them.

A. Monitoring Frequency

1. We recommend the basic monitoring frequency be once per year with those units that do not achieve an "allowable percentage of valves leaking" increasing their frequency to semi-annually or quarterly.

2. We also recommend that those units which meet this good performance level for two or three annual inspections be allowed to drop the program entirely - provided they continue their same general operating and maintenance practices.

3. We also recommend the program start with an initial monitoring and that the second monitoring one year later be used to determine if a unit must start a more frequent monitoring period. Starting this way would give a plant time to assess their situation, make feasible engineering and operating improvements, or gear up for more frequent monitoring. Since we believe most SOCMI units will pass the initial screening test, a great deal of unnecessary work will be avoided. After the second annual monitoring, units would go from semi-annual or quarterly to annual periods and vice versa per the skip-period monitoring plan in Section 3.2.3 or some appropriate modification of it.

B. Allowable Percentage Of Valves Leaking

The CTG mentions a two percent allowable percentage of valves leaking as a reasonable performance level. This is the same as the NSPS and is too low for RACT. It should be on the order of 4% or higher and based on a valid cost-effectiveness analysis, SOCMI maintenance effectiveness, the high-density polyethylene data, etc. This number is critical to the reasonableness of RACT and should be set based on mass emissions and the best computer analysis of SOCMI data.

C. Action Level (Leak Definition)

The EPA has recommended 10,000 ppm or greater observed during monitoring as the definition of a leak. From the start the TCC has argued that this level is too low and extensive comments and reasons have been set forth in Reference 10 (page 2) and Reference 11 (pages 25-29). We recommend the EPA define a leak in terms of a component's mass emission rate and that they not specify a single rate for the CTG but give the states a choice of several. The concentration level corresponding to the mass emission rate for the chemicals in question could then be used for screening purposes. Giving states a choice of several levels would let them tailor a control plan to fit their needs.

D. Capping Of Open-Ended Lines

Okay. See comments page 24 of Reference 11.

E. Weekly Pump Inspection

Okay. See comments page 18 of Reference 11.

F. Allowable Internal Before Repair

Generally okay. See comments on possible delay beyond scheduled unit shutdown on pages 18-21 of Reference 11.

G. Definition Of Light Liquid

Based on petroleum refining splits, a light liquid is defined as one having a vapor pressure greater than 0.3 kPa (0.044 psia) at 20°C. We believe a more rational basis would be in terms of the vapor pressure at 20°C that equals the concentration units equivalent to the action level. For example, for the EPA's proposed 10,000 ppm level this would be 0.01 atmospheres or 1.0 kPa (0.147 psia).

H. Unsafe & Difficult To Reach Components

The discussion of this in Par. 3.3.1 suggests that for safety reasons the state may wish to require less frequent monitoring of certain components in hazardous service. This has been added based on TCC/CMA comments but doesn't quite capture our concern. Certain processes are carried out at such extreme conditions that access is not allowed anytime the unit is in operation. Thus monitoring while the unit is in operation is not possible. This and some alternative monitoring possibilities are discussed on page 33 of Ref. 11.

I. Exclusion For Small Valves

Par. 2.3.1 of the CTG states that fugitive emissions are not related to capacity, throughput, age, temperature, or pressure. We do not find this stated in the reference document (Ref. 14, pages 11-49). What we did find was a statement that source and stream types could be grouped such that three equations were adequate for predicting leak rates from screened sources (see pages 11-12). But this is not quite the same and in Reports 3,6 and 7 significant effects were found for pressure and ambient temperature when analyzing SOCMI data.

Further we have recent data relevant to valve size from a refinery hydroprocessing unit handling light hydrocarbons at high pressures and temperatures - out of some 5,000 valves screened, 200 leaked (>10,000 ppmv) but none of these were in valves 2" or smaller although there were numerous valves 2" and smaller in the unit. We request the EPA to re-analyze their data specifically on this point to determine if small size valves can't be excluded from the monitoring requirement.

A. H. Nickolaus

A. H. Nickolaus
January 14, 1982

AHN/rtg

REFERENCES

1. "Evaluation of Maintenance for Fugitive VOC Emissions Control", EPA-600/52-81-080, May, 1981.

2. Blacksmith, Harris, and Langley, "Frequency of Leak Occurrence for Fittings in Synthetic Organic Chemical Plant Process Units", September, 1980.

3., 6., & 7.

"Analysis of SOCMI VOC Fugitive Emissions Data", EPA-600/2-81-111, June, 1981.

4. "Response Factors of VOC Analyzers at a Meter Reading 10,000 ppmv for Selected Organic Compounds", EPA-600/2-81/-51, March, 1981.

5. "Response of Portable VOC Analyzers to Chemical Mixtures", EPA-600/2-81-110, June, 1981.

8. "VOC Fugitive Emissions Data -- High Density Polyethylene Process Unit", EPA-600/2-81-109, June, 1981.

9. "Flare Sampling and Analysis Methods Development - Nineteenth Monthly Progress Report", April 1-30, 1981.

10. "Texas Chemical Council Comments on EPA's Preliminary Draft CTG For Control of Volatile Organic Fugitive Emissions From Synthetic Organic Chemical, Polymer, And Resin Manufacturing Equipment" given by A. H. Nickolaus at the March 17-18, 1981 National Air Pollution Control Technical Advisory Committee (NAPCTAC) meeting.

11. CMA & TCC, "Comments of The Chemical Manufacturers Association and The Texas Chemical Council on EPA's Proposed NSPS for VOC Fugitive Emission Sources Under The Clean Air Act, Docket No. A-79-32", April 6, 1981.

13. Letter: A. H. Nickolaus (TCC) to Don R. Goodwin (EPA), "Draft Control Technique Guideline Document For Control of VOC Emissions From Manufacture of Polyethylene, Polypropylene, and Polystyrene Resins, May 29, 1981, Page 3.

14. "VOC Fugitive Emissions in SOCMI-BID For Proposed Standards", EPA-450/3-80-033a, November, 1980.

15. "Emission Factors and Frequency of Leak Occurrence for Fittings in Refinery Process Units", EPA-600/2-79-044, February, 1979.

16. Based on emission rates in Table 4-4 of the BID (Ref. 14) and the number of valves in gas and light liquid service in the Model B plant (Table 6-1 of the BID).

17. A. H. Nickolaus (TCC) to Central Docket Section (A-130) Attn: Docket No. A-79-32, "RE: Proposed VOC Fugitive Emission Regulations For SOCMI Sources, Comments on Reports No. 1 thru 8 (46 FR 21789, April 14, 1981)", July 27, 1981.

18. J. S. Matey (Chemical Manufacturers Association) to Central Docket Section (A-130) Attn: Docket No. A-79-32, "RE: Proposed ··· VOC Fugitive Emission Sources ··· April 14, 1981 Review of Background Reports", August 7, 1981.

TABLE 1

TEXAS CHEMICAL COUNCIL (TCC) COMMENTS
TO THE EPA DURING THE DEVELOPMENT
OF VOC FUGITIVE EMISSIONS MONITORING REGULATIONS

May 17, 1979	-	Letter From H. H. McClure (TCC) to David R. Patrick (EPA). Comments on the March 1979 Hydroscience Report on Fugitive Loss Control Option.
February 1, 1980	-	Letter From H. H. McClure (TCC) to Jack R. Farmer (EPA). Comments on the Draft Background Information Document.
June 30, 1980	-	Letter From TCC to EPA. Comments on the Draft BID and Recommended SOCMI Standard.
July 28, 1980	-	Letter From H. H. McClure (TCC) to Walter Barber (EPA). "Texas Chemical Council Data On Capital 'Creep'".
July 30, 1980	-	Letter From H. H. McClure (TCC) to Walter Barber (EPA). "TCC/EPA Conference on Proposed SOCMI Fugitive Emission NSPS".
March 3, 1981	-	TCC Testimony At the Public Hearing on the SOCMI Fugitive Emissions Monitoring NSPS.
March 17, 1981	-	TCC Testimony at the March 17-18, 1981 NAPCTAC Meeting on the Preliminary Draft CTG.
March 23, 1981	-	TCC Clarifying Comments on Questions Raised at the NAPCTAC Meeting. Letter From A. H. Nickolaus (TCC) to Don R. Goodwin (EPA).
April 6, 1981	-	CMA/TCC Joint Written Comment on the Proposed NSPS (Docket No. A-79-32).
June 12, 1981	-	Letter From A. H. Nickolaus (TCC) to Don R. Goodwin (EPA) on Questions Raised at the Petroleum Refining NSPS Review before the NAPCTAC on June 3, 1981.
July 27, 1981	-	TCC Comments on the SOCMI Studies to Docket No. A-79-32.

AHN/rtg

1-14-82

TABLE 2

COST EFFECTIVENESS FOR MODEL UNIT B

	CTG TABLES 5-6,10	TCC ESTIMATE
VOC EMISSIONS, MG/YR		
"UNCONTROLLED"	260	78
CONTROLLED	90.4	50.9
REDUCTION	169.6	27.1
ANNUAL COSTS BEFORE CREDITS		
PUMPS	$9,486	$9,486
VALVES		
GAS	1,836	4,168
LIGHT LIQUID	1,771	4,020
SAFETY/RELIEF VALVES	1,128	1,128
OPEN-ENDED VALVES		
GAS SERVICE	698	1,584
LIGHT LIQUID SERVICE	3,532	8,018
HEAVY LIQUID SERVICE	2,535	2,535
COMPRESSORS	1,240	1,240
INSTRUMENT COSTS	5,494	5,494
TOTAL	$27,720	$37,673
RECOVERY CREDIT @ $410/MG	$69,540	$11,111
NET COST	($41,823)	$26,562
COST EFFECTIVENESS, $/MG	(247)	980

BASIS FOR TCC ESTIMATE

Emissions: 30% of CTG Based on SOCMI Data - See Attachment 2.

Monitoring Time: 1.7 Man-minutes Per Component - Table 2-2 Ref. 2.

Labor Efficiency: 75% Based on Experience, Allows Time for Training, Safety Meetings, Breaks, Etc.

Maintenance Efficiency: 71.3% per Ref. 1