BO-328

EPA-450/2-77-022
November 1977
(OAQPS NO. 1.2-079)

OAQPS GUIDELINES

CONTROL OF VOLATILE ORGANIC EMISSIONS FROM SOLVENT METAL CLEANING

U.S. ENVIRONMENTAL PROTECTION AGENCY
Office of Air and Waste Management
Office of Air Quality Planning and Standards
Research Triangle Park, North Carolina 27711

BO-
328

RADIAN LIBRARY
DURHAM, N.C.

This report is issued by the Environmental Protection Agency to report technical data of interest to a limited number of readers. Copies are available free of charge to Federal employees, current contractors and grantees, and nonprofit organizations - in limited quantities - from the Library Services Office (MD-35), Research Triangle Park, North Carolina 27711; or, for a fee, from the National Technical Information Service, 5285 Port Royal Road, Springfield, Virginia 22161.

Publication No. EPA-450/2-77-022

PREFACE

The purpose of this document is to inform regional, State, and local air pollution control agencies of the different techniques available for reducing organic emissions from solvent metal cleaning (degreasing). Solvent metal cleaning includes the use of equipment from any of three broad categories: cold cleaners, open top vapor degreasers, and conveyorized degreasers. All of these employ organic solvents to remove soluble impurities from metal surfaces.

The diversity in designs and applications of degreasers make an emission limit approach inappropriate; rather, regulations based on equipment specifications and operating requirements are recommended. Reasonably available control technology (RACT) for these sources entails implementation of operating procedures which minimize solvent loss and retrofit of applicable control devices. Required control equipment can be as simple as a manual cover or as complex as a carbon adsorption system, depending on the size and design of the degreaser. Required operating procedures include covering degreasing equipment whenever possible, properly using solvent sprays, reducing the amount of solvent carried out of the unit on cleaned work by various means, promptly repairing leaking equipment, and most importantly properly disposing of wastes containing volatile organics. Not all controls and procedures will be applicable to all degreasers, although in general specific operating requirements and control devices will be applicable to the majority of designs within each category of degreasers. Control of open top and conveyorized vapor degreasing is the most cost effective, followed by waste solvent disposal for all degreasing operations, manufacturing cold cleaning and maintenance cold cleaning.

switches are:

1. Vapor level control thermostat,
2. Condenser water flow switch and thermostat,
3. Sump thermostat,
4. Solvent level control,
5. Spray safety switch.

The first four safety switches listed above turn off the sump heat while the fifth turns off the spray.

The most important safety switch is the vapor level control thermostat. This device is activated when solvent vapor zone rises above the designed operating level. This can occur if the coolant flow is interrupted, for example. When the hot vapors are sensed, the sump heater is turned off thus minimizing vapor escape. This thermostat should be a manual reset type for manually operated degreasers. For conveyorized degreasers, the vapor level control thermostat should activate an alarm system. These controls should be checked frequently.

The condenser water flow switch and thermostat turn off the sump heat when either the condenser water stops circulating or the condenser water becomes warmer than specified. If the condenser water flow switch and thermostat is properly adjusted, then it will serve as a back-up for the safety vapor thermostat and also assure efficient operation of the condenser coils. In summer months, the cooling water for condensing coils often becomes too warm. In this case, the thermostats in a condenser water flow switch can signal a need for improvement, such as increasing the water flow rate. This problem occurred during a test performed for EPA.[16]

As oils, greases and other contaminants build up in the solvent, the boiling point of the mixture increases. Both the sump thermostat and solvent

TABLE 1. CONTROL SYSTEMS FOR COLD CLEANING

Control System A

Control Equipment:

1. Cover

2. Facility for draining cleaned parts

3. Permanent, conspicuous label, summarizing the operating requirements

Operating Requirements:

1. Do not dispose of waste solvent or transfer it to another party, such that greater than 20 percent of the waste (by weight) can evaporate into the atmosphere.* Store waste solvent only in covered containers.

2. Close degreaser cover whenever not handling parts in the cleaner.

3. Drain cleaned parts for at least 15 seconds or until dripping ceases.

Control System B

Control Equipment:

1. Cover: Same as in System A, except if (a) solvent volatility is greater than 2 kPa (15 mm Hg or 0.3 psi) measured at 38°C (100°F),** (b) solvent is agitated, or (c) solvent is heated, then the cover must be designed so that it can be easily operated with one hand. (Covers for larger degreasers may require mechanical assistance, by spring loading, counterweighting or powered systems.)

2. Drainage facility: Same as in System A, except that if solvent volatility is greater than about 4.3 kPa (32 mm Hg or 0.6 psi) measured at 38°C (100°F), then the drainage facility must be internal, so that parts are enclosed under the cover while draining. The drainage facility may be external for applications where an internal type cannot fit into the cleaning system.

3. Label: Same as in System A

4. If used, the solvent spray must be a solid, fluid stream (not a fine, atomized or shower type spray) and at a pressure which does not cause excessive splashing.

5. Major control device for highly volatile solvents: If the solvent volatility is > 4.3 kPa (33 mm Hg or 0.6 psi) measured at 38°C (100°F), or if solvent is heated above 50°C (120°F), then one of the following control devices must be used:

a. Freeboard that gives a freeboard ratio*** $\geq$ 0.7

b. Water cover (solvent must be insoluble in and heavier than water)

c. Other systems of equivalent control, such as a refrigerated chiller or carbon adsorption.

Operating Requirements:

Same as in System A

*Water and solid waste regulations must also be complied with.
**Generally solvents consisting primarily of mineral spirits (Stoddard) have volatilities < 2 kPa.
***Freeboard ratio is defined as the freeboard height divided by the width of the degreaser.

Two levels of control for each type of degreaser have been identified here as examples of reasonably available control technology (RACT). In general, control level A shows proper operating practice and simple, inexpensive control equipment. Control level B consists of level A plus additional requirements to improve the effectiveness of control. The degree of emission reduction for both individual items and control levels are discussed in the text. Specific requirements can be modified to achieve whatever level of control is necessary. Control systems for cold cleaners are shown in Table 1, those for open top vapor degreasers in Table 2, and those for conveyorized degreasers in Table 3.

Two exemptions are recommended. First, conveyorized degreasers smaller than 2.0 m^2 of air/vapor interface should be exempt from a requirement for a major control device. This would not be cost effective and would tend to move the small conveyorized degreaser users to open top vapor degreasers which emit more solvent per unit work load. Second, open top vapor degreasers smaller than 1 m^2 of open area should be exempt from the application of refrigerated chillers or carbon adsorbers. Again, requirement for these would not be cost effective.

TABLE 3. CONTROL SYSTEMS FOR CONVEYORIZED DEGREASERS

Control System A

Control Equipment: None

Operating Requirements:

1. Exhaust ventilation should not exceed 20 m^3/min per m^2 (65 cfm per ft^2) of degreaser opening, unless necessary to meet OSHA requirements. Work place fans should not be used near the degreaser opening.

2. Minimize carry-out emissions by:

a. Racking parts for best drainage.
b. Maintaining verticle conveyor speed at < 3.3 m/min (11 ft/min).

3. Do not dispose of waste solvent or transfer it to another party such that greater than 20 percent of the waste (by weight) can evaporate into the atmosphere. Store waste solvent only in covered containers.

4. Repair solvent leaks immediately, or shutdown the degreaser.

5. Water should not be visibly detectable in the solvent exiting the water separator.

Control System B

Control Equipment:

1. Major control devices; the degreaser must be controlled by either:

a. Refrigerated chiller,
b. Carbon adsorption system, with ventilation $\geq$ 15 m^2/min per m^2 (50 cfm/ft^2) of air/vapor area (when down-time covers are open), and exhausting <25 ppm of solvent by volume averaged over a complete adsorption cycle, or
c. System demonstrated to have control efficiency equivalent to or better than either of the above.

2. Either a drying tunnel, or another means such as rotating (tumbling) basket, sufficient to prevent cleaned parts from carrying out solvent liquid or vapor.

3. Safety switches

a. Condenser flow switch and thermostat - (shuts off sump heat if coolant is either not circulating or too warm).
b. Spray safety switch - (shuts off spray pump or conveyor if the vapor level drops excessively, e.g. > 10 cm (4 in.)).
c. Vapor level control thermostat - (shuts off sump heat when vapor level rises too high).

4. Minimized openings: Entrances and exits should silhouette work loads so that the average clearance (between parts and the edge of the degreaser opening) is either <10 cm (4 in.) or <10 percent of the width of the opening.

5. Down-time covers: Covers should be provided for closing off the entrance and exit during shutdown hours.

Operating Requirements:

1. to 5. Same as for System A

6. Down-time cover must be placed over entrances and exits of conveyorized degreasers immediately after the conveyor and exhaust are shutdown and removed just before they are started up.

TABLE 2. COMPLETE CONTROL SYSTEMS FOR OPEN TOP VAPOR DEGREASERS

Control System A

Control Equipment:

1. Cover that can be opened and closed easily without disturbing the vapor zone.

Operating Requirements:

1. Keep cover closed at all times except when processing work loads through the degreaser.

2. Minimize solvent carry-out by the following measures:

a. Rack parts to allow full drainage.
b. Move parts in and out of the degreaser at less than 3.3 m/sec (11 ft/min).
c. Degrease the work load in the vapor zone at least 30 sec. or until condensation ceases.
d. Tip out any pools of solvent on the cleaned parts before removal.
e. Allow parts to dry within the degreaser for at least 15 sec. or until visually dry.

3. Do not degrease porous or absorbent materials, such as cloth, leather, wood or rope.

4. Work loads should not occupy more than half of the degreaser's open top area.

5. The vapor level should not drop more than 10 cm (4 in) when the work load enters the vapor zone.

6. Never spray above the vapor level.

7. Repair solvent leaks immediately, or shutdown the degreaser.

8. Do not dispose of waste solvent or transfer it to another party such that greater than 20 percent of the waste (by weight) will evaporate into the atmosphere. Store waste solvent only in closed containers.

9. Exhaust ventilation should not exceed 20 m^3/min per m^2 (65 cfm per ft^2) of degreaser open area, unless necessary to meet OSHA requirements. Ventilation fans should not be used near the degreaser opening.

10. Water should not be visually detectable in solvent exiting the water separator.

Control System B

Control Equipment:

1. Cover (same as in system A).

2. Safety switches

a. Condenser flow switch and thermostat - (shuts off sump heat if condenser coolant is either not circulating or too warm).
b. Spray safety switch - (shuts off spray pump if the vapor level drops excessively, about 10 cm (4 in).

3. Major Control Device:

Either: a. Freeboard ratio greater than or equal to 0.75, and if the degreaser opening is > 1 m^2 (10 ft^2), the cover must be powered,
b. Refrigerated chiller,
c. Enclosed design (cover or door opens only when the dry part is actually entering or exiting the degreaser.),
d. Carbon adsorption system, with ventilation $\geq$ 15 m^3/min per m^2 (50 cfm/ft^2) of air/vapor area (when cover is open), and exhausting <25 ppm solvent averaged over one complete adsorption cycle, or
e. Control system, demonstrated to have control efficiency, equivalent to or better than any of the above.

4. Permanent, conspicuous label, summarizing operating procedures #1 to #6.

Operating Requirements:

Same as in System A

Page

3.1.1.3 Refrigerated Chillers 3-6

3.1.1.4 Carbon Adsorption 3-9

3.1.1.5 Safety Switches 3-14

3.1.2 Controls to Minimize Carry-Out 3-16

3.1.3 Controls for Both Solvent Bath and Carry-Out Emissions Combined 3-18

3.1.3.1 Automated Cover-Conveyor System 3-18

3.1.3.2 Refrigeration Condensation 3-20

3.1.4 Control of Waste Solvent Evaporation 3-22

3.1.4.1 Current Practices 3-22

3.1.4.2 Recommended Practices 3-23

3.1.5 Other Control Devices 3-27

3.1.5.1 Incineration 3-28

3.1.5.2 Liquid Absorption 3-28

3.2 Complete Control Systems 3-29

3.2.1 Cold Cleaning Control Systems 3-30

3.2.2 Control Systems for Open Top Vapor Degreasing 3-32

3.2.3 Control Systems for Conveyorized Degreasers 3-32

3.3 References 3-37

Chapter 4.0 Cost Analysis 4-1

4.1 Introduction 4-1

4.1.1 Purpose 4-1

4.1.2 Scope 4-1

4.1.3 Model Plants 4-2

4.1.4 Capital Cost Estimates 4-3

4.1.5 Annualized Costs 4-3

TABLE OF CONTENTS

		Page
Preface		iii
Chapter 1.0	Introduction and Summary	1-1
1.1	Need to Regulate Solvent Metal Cleaning	1-1
1.2	Regulatory Approach	1-2
Chapter 2.0	Sources and Types of Emissions	2-1
2.1	Industry Description	2-1
2.2	Types of Degreasers and Their Emissions	2-4
2.2.1	Cold Cleaners	2-7
2.2.1.1	Design and Operation	2-7
2.2.1.2	Emissions	2-12
2.2.2	Open Top Vapor Degreasers	2-16
2.2.2.1	Design and Operation	2-16
2.2.2.2	Emissions	2-25
2.2.3	Conveyorized Degreasing	2-33
2.2.3.1	Design and Operation	2-33
2.2.3.2	Emissions	2-39
2.4	References	2-45
Chapter 3.0	Emission Control Technology	3-1
3.1	Emission Control Devices	3-1
3.1.1	Emission Control Devices	3-1
3.1.1.1	Improved Cover	3-2
3.1.1.2	High Freeboard	3-5

Page

6.1 Observation of Control Equipment and Operating Practices 6-2

6.2 Material Balance 6-2

6.3 Other Emission Tests 6-3

Chapter 7.0 Enforcement Aspects 7-1

7.1 Regulatory Approaches 7-2

7.1.1 Emission Standards 7-2

7.1.2 Equipment Standards 7-3

7.1.3 Operational Standards 7-4

7.1.4 Solvent Exemption Standards 7-5

7.2 Affected Facilities - Priorities 7-5

7.2.1 Definitions of Affected Facilities 7-5

7.2.2 Priorities of Enforcement 7-5

Appendix A.0 Emission Test Results

Appendix B.0 Calculations

Page

4.2 Cold Cleaners 4-4

4.2.1 Model Plant Parameters 4-4

4.2.2 Control Costs 4-6

4.3 Open Top Vapor Degreasers 4-8

4.3.1 Model Plant Parameters 4-8

4.3.2 Control Costs 4-8

4.3.3 Cost Effectiveness 4-14

4.4 Conveyorized Degreasers 4-16

4.4.1 Model Plant Parameters 4-16

4.4.2 Control Costs 4-18

4.4.3 Cost Effectiveness 4-20

4.5 References 4-24

Chapter 5.0 Adverse Environmental Effects of Applying The Technology 5-1

5.1 Air Impacts 5-1

5.2 Water Impacts 5-1

5.2.1 Waste Solvent Disposal 5-1

5.2.2 Steam Condensate from Carbon Adsorption 5-2

5.2.2.1 Chlorinated Solvent in Steam Condensate 5-2

5.2.2.2 Stabilizers in Steam Condensate 5-3

5.2.3 Effluents from Water Separators 5-4

5.3 Solid Waste Impact 5-4

5.4 Energy Impact 5-5

5.5 Other Environmental Concerns 5-6

5.6 References 5-8

Chapter 6.0 Compliance Testing Methods and Monitoring Techniques 6-1

LIST OF FIGURES

		Page
Figure 2-1	Cold Cleaner	2-9
Figure 2-2	Cold Cleaner Emission Points	2-13
Figure 2-3	Open Top Vapor Degreaser	2-18
Figure 2-4	Basic Principle for Water Separator for Vapor Degreaser	2-20
Figure 2-5	Open Top Degreaser with Offset Condenser Coils	2-21
Figure 2-6	Two Compartment Degreaser with Offset Boiling Chamber	2-22
Figure 2-7	Two Compartment Degreaser	2-23
Figure 2-8	Degreaser with Lip Exhaust	2-24
Figure 2-9	Open Top Vapor Degreaser Emission Points	2-26
Figure 2-10	Cross Rod Conveyorized Degreaser	2-35
Figure 2-11	Monorail Conveyorized Degreaser	2-36
Figure 2-12	Vibra Degreaser	2-37
Figure 2-13	Ferris Wheel Degreaser	2-38
Figure 2-14	Mesh Belt Conveyorized Degreaser	2-40
Figure 2-15	Conveyorized Degreaser Emission Points	2-42
Figure 3-1	Refrigerated Freeboard Chiller	3-7
Figure 3-2	Carbon Adsorber	3-10
Figure 3-3	Adsorption Cycle	3-11
Figure 3-4	Desorption Cycle	3-12
Figure 3-5	Elevator Design of Degreaser - Vapor Type	3-19
Figure 3-6	Vapor Pressures of Several Solvents	3-21
Figure 3-7	External Still	3-25
Figure 4-1	Cost-Effectiveness of Alternative Control Options for Existing Open Top Vapor Degreasers	4-15
Figure 4-2	Cost-Effectiveness of Alternative Control Options for Existing Monorail Degreasers	4-21
Figure 4-3	Cost-Effectiveness of Alternative Control Options for Existing Cross-Rod Degreasers	4-23

LIST OF TABLES

		Page
Table 1	Control Systems for Cold Cleaning	v
Table 2	Control Systems for Open Top Vapor Degreasers	vi
Table 3	Control Systems for Conveyorized Degreasers	vii
Table 2-1	Common Metal Cleaning Solvents	2-3
Table 2-2	National Degreasing Solvent Consumption (1974)	2-5
Table 2-3	Emissions from Solvent Degreasers (1974)	2-6
Table 3-1	Control Systems for Cold Cleaning	3-31
Table 3-2	Complete Control Systems for Open Top Vapor Degreasers	3-33
Table 3-3	Control Systems for Conveyorized Degreasers	3-35
Table 4-1	Cost Parameters for Model Cold Cleaners	4-5
Table 4-2	Control Costs for Typical Cold Cleaners	4-7
Table 4-3	Cost Parameters for Model Open Top Vapor Degreasers	4-9
Table 4-4	Control Cost for Typical Size Open Top Vapor Degreaser	4-10
Table 4-5	Control Cost for Small Open Top Vapor Degreaser	4-11
Table 4-6	Cost Parameters for Model Conveyorized Degreasers	4-17
Table 4-7	Control Costs for Typical Conveyorized Degreasers	4-19

1.0 INTRODUCTION AND SUMMARY

The purpose of EPA's series of control technique guideline documents is to provide guidance on emission reduction techniques which can be applied to existing sources in specific industries. The documents are to be used to assist States in revising their implementation plans (SIP's) to attain and maintain National Ambient Air Quality Standards (NAAQS). This document discusses volatile organic compound (VOC) emissions and applicable control techniques for organic solvent metal cleaning operations (degreasing with solvents).

1.1 NEED TO REGULATE SOLVENT METAL CLEANING

Solvent metal cleaning is a significant source of volatile organic compounds (VOC) and tends to be concentrated in urban areas where the oxidant NAAQS is likely to be exceeded. In 1975 solvent metal cleaning emitted about 725 thousand metric tons of organics. This represents about four percent of the national organic emissions from stationary sources. Presently, solvent metal cleaning is the fifth largest stationary source of organic emissions. Although emissions from solvent degreasing (i.e., metal cleaning) represent about four percent of nationwide VOC sources, the proportion is significantly higher in most urban areas, because of their high concentration of metalworking industries. For example,

to upper atmospheric ozone depletion. These reasons and others support the decision to concentrate on positive reduction rather than substitution.

Positive emission reduction from solvent metal cleaning should be attained through use of proper operating practices and retrofit control equipment. Proper operating practices are those which minimize solvent loss to the atmosphere. These include covering degreasing equipment whenever possible, proper use of solvent sprays, various means of reducing the amount of solvent carried out of the degreaser on cleaned work, prompt repair of leaking equipment, and most importantly, proper disposal of wastes containing volatile organic solvents. In addition to proper operating practices there are many control devices which can be retrofit to degreasers; however, because of the diversity in their designs, not all degreasers require all control devices. Small degreasers using room temperature solvent may require only a cover, whereas a large degreaser using boiling solvent may require a refrigerated freeboard chiller or a carbon adsorption system. Two types of control equipment which will be applicable to many degreaser designs are drainage facilities for cleaned parts and safety switches and thermostats which prevent large emissions due to equipment malfunction. The many degreaser designs along with the emissions characteristic of those designs and the factors affecting those emissions are described in Chapter 2. Control devices for each type of emission and control systems for each degreaser design are described in Chapter 3.

the Southern California Air Quality Management District estimates that 14.8 percent of the stationary organic emissions in Los Angeles County are attributable to solvent degreasing.

Control technology is available to reduce hydrocarbon emissions from existing solvent metal cleaning operations. However, this technology has not been broadly applied largely because of unawareness of economic incentives and the absence of regulatory requirements. In 1974, for example, 16 states covered degreasing operations with solvent regulations identical or similar to Rule 66 of the Los Angeles County Air Pollution Control District. Since then, additional state and local agencies have adopted the same types of statutes. Generally, up to 3,000 pounds of VOC emissions per day are allowed from sources using solvents considered non-photochemically reactive under Rule 66 criteria. Since solvent metal cleaning operations rarely release more than that amount, they have usually complied with Rule 66 regulations merely by substitution. Regulatory incentive to institute control technology rather than substitution is necessary to achieve positive emission reduction.

1.2 REGULATORY APPROACH

Photochemical oxidant control strategies in the past have relied heavily on the substitution of solvents of relatively low photochemical reactivity to reduce emissions of higher reactivity VOC. Thus, total emissions did not necessarily decrease, only the make-up of those emissions changed. One problem with this approach was that many solvents classed as low reactivity materials have since been found to be moderately and in some cases highly reactive. EPA's current direction and the direction of this document is toward positive reductions of all VOC emissions. This is not only more rational from a standpoint of conservation but some low reactivity solvents are now suspected of contributing

2.0 SOURCES AND TYPES OF EMISSIONS

2.1 INDUSTRY DESCRIPTION

Solvent metal cleaning describes those processes using non-aqueous solvents to clean and remove soils from metal surfaces. These solvents, which are principally derived from petroleum, include petroleum distillates, chlorinated hydrocarbons, ketones, and alcohols. Organic solvents such as these can be used alone or in blends to remove water insoluble soils for cleaning purposes and to prepare parts for painting, plating, repair, inspection, assembly, heat treatment or machining.

Solvent metal cleaning is usually chosen after experience has indicated that satisfactory cleaning is not obtained with water or detergent solutions. Availability, low cost and familiarity combine to make water the first consideration for cleaning; however, water has several limitations as a cleaning agent. For example, it exhibits low solubility for many organic soils, a slow drying rate, electrical conductivity, a high surface tension and a propensity for rusting ferrous metals and staining non-ferrous metals. All of these limitations can be overcome with the use of organic solvents.

A typical industrial degreasing solvent would be expected to dissolve oils, greases, waxes, tars, and in some cases water. Insoluble matter such as sand, metal chips, buffing abrasives or fibers, held by the soils, are flushed away.

Table 2-1

COMMON METAL CLEANING SOLVENTS****

Type of Solvent/ Solvent	Solvency for Metal Working Soils	Toxicity (ppm)	Flash Point	Evaporation Rate**	Water Solubility (% wt.)	Boiling Point (Range)	Pounds Per Gal.	Price Per Gal.
Alcohols								
Ethanol (95%)	poor	1000*	60°F	24.7	∞	165-176°F	6.76	$ 1.59
Isopropanol	poor	400*	55°F	19	∞	179-181°F	6.55	$ 1.26
Methanol	poor	200*	58°F	45	∞	147-149°F	6.60	$ 1.11
Aliphatic Hydrocarbons								
Heptane	good	500*	<20°F	26	<0.1	201-207°F	5.79	$ 0.86
Kerosene	good	500	149°F	0.63	<0.1	354-525°F	6.74	$ 0.66
Stoddard	good	200	105°F	2.2	<0.1	313-380°F	6.38	$ 0.62
Mineral Spirits 66	good	200	107°F	1.5	<0.1	318-382°F	6.40	$ 0.62
Aromatic Hydrocarbons								
Benzene***	good	10*	10°F	132	<0.1	176-177°F	7.36	--
SC 150	good	200	151°F	0.48	<0.1	370-410°F	7.42	$ 1.06
Toluene	good	200*	45°F	17	<0.1	230-232°F	7.26	$ 0.90
Turpentine	good	100*	91°F	2.9	<0.1	314-327°F	7.17	$ 2.40
Xylene	good	100*	81°F	4.7	<0.1	281-284°F	7.23	$ 0.96
Chlorinated Solvents								
Carbon Tetrachloride***	excellent	10*	none	111	<0.1	170-172°F	13.22	$ 3.70
Methylene Chloride	excellent	500*	none	363	0.2	104-105.5°F	10.98	$ 2.83
Perchloroethylene	excellent	100*	none	16	<0.1	250-254°F	13.47	$ 3.33
1,1,1-Trichloroethane	excellent	350*	none	103	<0.1	165-194°F	10.97	$ 2.78
Trichloroethylene	excellent	100*	none	62.4	<0.1	188-190°F	12.14	$ 3.13
Fluorinated Solvents								
Trichlorotrifluoro-ethane (FC-113)	good	1000*	none	439	<0.1	117°F	13.16	$ 7.84
Ketones								
Acetone	good	1000*	<0°F	122	∞	132-134°F	6.59	$ 1.45
Methyl ethyl ketone	good	200*	28°F	45	27	174-176°F	6.71	$ 1.74

*Federal Register, June 27, 1974, Vol. 39, No. 125.
**Evaporation Rate determined by weight loss of 50 mls in a 125 ml beaker on an analytical balance (Dow Chemical Co. method).
***Not recommended or sold for metal cleaning (formerly standards in industry).
****Primary source from The Solvents and Chemicals Companies "Physical Properties of Common Organic Solvents" and Price List (July 1, 1975).

A broad spectrum of organic solvents is available. Choices among the solvents are based on the solubility of the soil, toxicity, flammability, evaporation rate, effect on non-metallic portions of the part cleaned and numerous other properties. The most important properties of solvents commonly used in metal cleaning are summarized in Table 2-1.

As would be expected, the metal working industry is the major user of solvent metal cleaning. Eight SIC codes (Numbers 25 and 33 to 39) cover these industry categories. Examples of industries within these classifications are automotive, electronics, appliances, furniture, jewelry, plumbing, aircraft, refrigeration, business machinery and fasteners. All are frequent users of organic solvents for metal cleaning. However, the use of solvents for metal cleaning is not limited to these industries; solvent metal cleaning is also used in non-metal working industries such as printing, chemicals, plastics, rubber, textiles, glass, paper and electric power. Often, the function of the organic solvents in these industries is to provide maintenance cleaning of electric motors, fork lift trucks, printing presses, etc. Even in non-manufacturing industries, solvent metal cleaning is commonplace. Most automotive, railroad, bus, aircraft, truck and electric tool repair stations use these solvents. In short, most businesses perform solvent metal cleaning, at least part time, if not regularly. The number of companies routinely using solvent metal cleaning operations probably exceeds one million. Furthermore, large scale users may often have over 100 separate degreasing operations at one plant location.

Solvent metal cleaning is broken into three major categories: cold cleaning, open top vapor degreasing and conveyorized degreasing. In cold cleaning operations, all types of solvents are used depending on the type of parts to be cleaned. Vapor degreasing uses halogenated solvents because

Table 2-2

National Degreasing Solvent Consumption* (1974)

Solvent Type	Solvent Consumption (10^3 metric tons)		
	Cold cleaning	Vapor degreasing	All degreasing
Halogenated:			
Trichloroethylene	25	128	153
1,1,1 Trichloroethane	82	80	162
Perchloroethylene	13	41	54
Methylene Chloride	23	7	30
Trichlorotrifluoroethane	10	20	30
	153	276	429
Aliphatics	222		222
Aromatics:			
Benzene	7		
Toluene	14		
Xylene	12		
Cyclohexane	1		
Heavy Aromatics	12		
	46	0	46
Oxygenated:			
Ketones:			
Acetone	10		
Methyl Ethyl Ketone	8		
Alcohols:			
Butyl	5		
Ethers	6		
	29	~0	29
Total Solvents:	450**	276***	726
Range of Accuracy:	(±125)	(±25)	(±145)

*See Appendix B.1 for background on the above estimates.

**Includes 25,000 metric tons from non boiling convevorized degreasers.

***Includes 75,000 metric tons from conveyorized vapor degreasers.

they are not flammable and their vapors are much heavier than air.

The most recent estimates are that there are 1,300,000 cold cleaning units in the United States, with about 70 percent of these devoted to maintenance or servicing operations and the remainder used for manufacturing operations. There are also an estimated 22,000 open top vapor degreasers and 4,000 conveyorized degreasers. Of the estimated 726,000 metric tons per year of solvent used for degreasing, roughly 60 percent is for cold cleaning, 25 percent for open top vapor degreasing and 15 percent for conveyorized degreasing. Tables 2-2 and 2-3 summarize the above information. Emissions are discussed in detail in the next chapter.

2.2 TYPES OF DEGREASERS AND THEIR EMISSIONS

There are three basic types of organic solvent degreasers: cold cleaners, open top vapor degreasers, and conveyorized degreasers. Cold cleaners are usually the simplest and least expensive. Their solvent is usually near room temperature, but is sometimes heated. The temperature, however, always remains below the solvent's boiling point. A cold cleaner is a tank of solvent usually including a cover for nonuse periods. Inside is a work surface or basket suspended over the solvent. An open top vapor degreaser resembles a large cold cleaner; however, the solvent is heated to its boiling point. This creates a zone of solvent vapor that is contained by a set of cooling coils. Both the cold cleaner and the open top vapor degreaser clean individual batches of parts; thus, they are termed "batch loaded". A conveyorized degreaser is loaded continuously by means of various types of conveyor systems, and may either operate as a vapor degreaser as a cold cleaner.

2.2.1 Cold Cleaners

Cold cleaner operations include spraying, brushing, flushing and immersion. The solvent occasionally is heated in cold cleaners but always remains well below its boiling point.

Cold cleaners are defined here not to include nonboiling conveyorized degreasers which are covered in Section 2.3. Wipe cleaning is also not included.

Cold cleaners are estimated to result in the largest total emission of the three categories of degreasers. This is primarily because of the extremely large number of these units (over 1 million nationally) and because much of the disposed of waste solvent is allowed to evaporate. It is estimated that cold cleaners emit 380 thousand metric tons of organics per year, this being about 55 percent of the national degreasing emissions (see Appendix B.1). Cold cleaning solvents nationally account for almost all of the aliphatic, aromatic, and oxygenated degreasing solvents and about one-third of halogenated degreasing solvents.

Despite the large aggregate emission, the average cold cleaning unit generally emits only about one-third ton per year of organics, with about one-half to three-fourths of that emission resulting from evaporation of the waste solvent at a disposal site.

2.2.1.1 Design and Operation -

Table 2-3

Emissions from Solvent Degreasers (1974)

Type Degreaser	Estimated National Emission (10^3Mt/yr)	Approximate No. of Units Nationally	Averaged Emission Rate per Unit (Mt/yr)
Cold Cleaners	380*	1,220,000	0.3
Open Top Vapor Degreasers	200	21,000	10
Conveyorized Degreasers	100	3,700	27

*380 emission = 450 consumption (from Table 2-2) minus 25 for wiping losses, 25 for conveyorized cold cleaning and 20 for non-evaporative waste solvent disposal (incineration and non-evaporating landfill encapsulation).

BO-328

EPA-450/2-77-022
November 1977
(OAQPS NO. 1.2-079)

OAQPS GUIDELINES

CONTROL OF VOLATILE ORGANIC EMISSIONS FROM SOLVENT METAL CLEANING

U.S. ENVIRONMENTAL PROTECTION AGENCY
Office of Air and Waste Management
Office of Air Quality Planning and Standards
Research Triangle Park, North Carolina 27711

BO-
328

RADIAN LIBRARY
DURHAM, N.C.

This report is issued by the Environmental Protection Agency to report technical data of interest to a limited number of readers. Copies are available free of charge to Federal employees, current contractors and grantees, and nonprofit organizations - in limited quantities - from the Library Services Office (MD-35), Research Triangle Park, North Carolina 27711; or, for a fee, from the National Technical Information Service, 5285 Port Royal Road, Springfield, Virginia 22161.

Publication No. EPA-450/2-77-022

PREFACE

The purpose of this document is to inform regional, State, and local air pollution control agencies of the different techniques available for reducing organic emissions from solvent metal cleaning (degreasing). Solvent metal cleaning includes the use of equipment from any of three broad categories: cold cleaners, open top vapor degreasers, and conveyorized degreasers. All of these employ organic solvents to remove soluble impurities from metal surfaces.

The diversity in designs and applications of degreasers make an emission limit approach inappropriate; rather, regulations based on equipment specifications and operating requirements are recommended. Reasonably available control technology (RACT) for these sources entails implementation of operating procedures which minimize solvent loss and retrofit of applicable control devices. Required control equipment can be as simple as a manual cover or as complex as a carbon adsorption system, depending on the size and design of the degreaser. Required operating procedures include covering degreasing equipment whenever possible, properly using solvent sprays, reducing the amount of solvent carried out of the unit on cleaned work by various means, promptly repairing leaking equipment, and most importantly properly disposing of wastes containing volatile organics. Not all controls and procedures will be applicable to all degreasers, although in general specific operating requirements and control devices will be applicable to the majority of designs within each category of degreasers. Control of open top and conveyorized vapor degreasing is the most cost effective, followed by waste solvent disposal for all degreasing operations, manufacturing cold cleaning and maintenance cold cleaning.

Two levels of control for each type of degreaser have been identified here as examples of reasonably available control technology (RACT). In general, control level A shows proper operating practice and simple, inexpensive control equipment. Control level B consists of level A plus additional requirements to improve the effectiveness of control. The degree of emission reduction for both individual items and control levels are discussed in the text. Specific requirements can be modified to achieve whatever level of control is necessary. Control systems for cold cleaners are shown in Table 1, those for open top vapor degreasers in Table 2, and those for conveyorized degreasers in Table 3.

Two exemptions are recommended. First, conveyorized degreasers smaller than 2.0 m^2 of air/vapor interface should be exempt from a requirement for a major control device. This would not be cost effective and would tend to move the small conveyorized degreaser users to open top vapor degreasers which emit more solvent per unit work load. Second, open top vapor degreasers smaller than 1 m^2 of open area should be exempt from the application of refrigerated chillers or carbon adsorbers. Again, requirement for these would not be cost effective.

TABLE 1. CONTROL SYSTEMS FOR COLD CLEANING

Control System A

Control Equipment:

1. Cover

2. Facility for draining cleaned parts

3. Permanent, conspicuous label, summarizing the operating requirements

Operating Requirements:

1. Do not dispose of waste solvent or transfer it to another party, such that greater than 20 percent of the waste (by weight) can evaporate into the atmosphere.* Store waste solvent only in covered containers.

2. Close degreaser cover whenever not handling parts in the cleaner.

3. Drain cleaned parts for at least 15 seconds or until dripping ceases.

Control System B

Control Equipment:

1. Cover: Same as in System A, except if (a) solvent volatility is greater than 2 kPa (15 mm Hg or 0.3 psi) measured at 38°C (100°F),** (b) solvent is agitated, or (c) solvent is heated, then the cover must be designed so that it can be easily operated with one hand. (Covers for larger degreasers may require mechanical assistance, by spring loading, counterweighting or powered systems.)

2. Drainage facility: Same as in System A, except that if solvent volatility is greater than about 4.3 kPa (32 mm Hg or 0.6 psi) measured at 38°C (100°F), then the drainage facility must be internal, so that parts are enclosed under the cover while draining. The drainage facility may be external for applications where an internal type cannot fit into the cleaning system.

3. Label: Same as in System A

4. If used, the solvent spray must be a solid, fluid stream (not a fine, atomized or shower type spray) and at a pressure which does not cause excessive splashing.

5. Major control device for highly volatile solvents: If the solvent volatility is > 4.3 kPa (33 mm Hg or 0.6 psi) measured at 38°C (100°F), or if solvent is heated above 50°C (120°F), then one of the following control devices must be used:

a. Freeboard that gives a freeboard ratio*** $\geq$ 0.7

b. Water cover (solvent must be insoluble in and heavier than water)

c. Other systems of equivalent control, such as a refrigerated chiller or carbon adsorption.

Operating Requirements:

Same as in System A

*Water and solid waste regulations must also be complied with.
**Generally solvents consisting primarily of mineral spirits (Stoddard) have volatilities < 2 kPa.
***Freeboard ratio is defined as the freeboard height divided by the width of the degreaser.

TABLE 2. COMPLETE CONTROL SYSTEMS FOR OPEN TOP VAPOR DEGREASERS

Control System A

Control Equipment:

1. Cover that can be opened and closed easily without disturbing the vapor zone.

Operating Requirements:

1. Keep cover closed at all times except when processing work loads through the degreaser.

2. Minimize solvent carry-out by the following measures:

a. Rack parts to allow full drainage.
b. Move parts in and out of the degreaser at less than 3.3 m/sec (11 ft/min).
c. Degrease the work load in the vapor zone at least 30 sec. or until condensation ceases.
d. Tip out any pools of solvent on the cleaned parts before removal.
e. Allow parts to dry within the degreaser for at least 15 sec. or until visually dry.

3. Do not degrease porous or absorbent materials, such as cloth, leather, wood or rope.

4. Work loads should not occupy more than half of the degreaser's open top area.

5. The vapor level should not drop more than 10 cm (4 in) when the work load enters the vapor zone.

6. Never spray above the vapor level.

7. Repair solvent leaks immediately, or shutdown the degreaser.

8. Do not dispose of waste solvent or transfer it to another party such that greater than 20 percent of the waste (by weight) will evaporate into the atmosphere. Store waste solvent only in closed containers.

9. Exhaust ventilation should not exceed 20 m^3/min per m^2 (65 cfm per ft^2) of degreaser open area, unless necessary to meet OSHA requirements. Ventilation fans should not be used near the degreaser opening.

10. Water should not be visually detectable in solvent exiting the water separator.

Control System B

Control Equipment:

1. Cover (same as in system A).

2. Safety switches

a. Condenser flow switch and thermostat - (shuts off sump heat if condenser coolant is either not circulating or too warm).
b. Spray safety switch - (shuts off spray pump if the vapor level drops excessively, about 10 cm (4 in).

3. Major Control Device:

Either: a. Freeboard ratio greater than or equal to 0.75, and if the degreaser opening is > 1 m^2 (10 ft^2), the cover must be powered,
b. Refrigerated chiller,
c. Enclosed design (cover or door opens only when the dry part is actually entering or exiting the degreaser.),
d. Carbon adsorption system, with ventilation $\geq$ 15 m^3/min per m^2 (50 cfm/ft^2) of air/vapor area (when cover is open), and exhausting <25 ppm solvent averaged over one complete adsorption cycle, or
e. Control system, demonstrated to have control efficiency, equivalent to or better than any of the above.

4. Permanent, conspicuous label, summarizing operating procedures #1 to #6.

Operating Requirements:

Same as in System A

TABLE 3. CONTROL SYSTEMS FOR CONVEYORIZED DEGREASERS

Control System A

Control Equipment: None

Operating Requirements:

1. Exhaust ventilation should not exceed 20 m^3/min per m^2 (65 cfm per ft^2) of degreaser opening, unless necessary to meet OSHA requirements. Work place fans should not be used near the degreaser opening.

2. Minimize carry-out emissions by:

a. Racking parts for best drainage.
b. Maintaining verticle conveyor speed at < 3.3 m/min (11 ft/min).

3. Do not dispose of waste solvent or transfer it to another party such that greater than 20 percent of the waste (by weight) can evaporate into the atmosphere. Store waste solvent only in covered containers.

4. Repair solvent leaks immediately, or shutdown the degreaser.

5. Water should not be visibly detectable in the solvent exiting the water separator.

Control System B

Control Equipment:

1. Major control devices; the degreaser must be controlled by either:

a. Refrigerated chiller,
b. Carbon adsorption system, with ventilation ≥ 15 m^2/min per m^2 (50 cfm/ft^2) of air/vapor area (when down-time covers are open), and exhausting <25 ppm of solvent by volume averaged over a complete adsorption cycle, or
c. System demonstrated to have control efficiency equivalent to or better than either of the above.

2. Either a drying tunnel, or another means such as rotating (tumbling) basket, sufficient to prevent cleaned parts from carrying out solvent liquid or vapor.

3. Safety switches

a. Condenser flow switch and thermostat - (shuts off sump heat if coolant is either not circulating or too warm).
b. Spray safety switch - (shuts off spray pump or conveyor if the vapor level drops excessively, e.g. > 10 cm (4 in.)).
c. Vapor level control thermostat - (shuts off sump heat when vapor level rises too high).

4. Minimized openings: Entrances and exits should silhouette work loads so that the average clearance (between parts and the edge of the degreaser opening) is either <10 cm (4 in.) or <10 percent of the width of the opening.

5. Down-time covers: Covers should be provided for closing off the entrance and exit during shutdown hours.

Operating Requirements:

1. to 5. Same as for System A

6. Down-time cover must be placed over entrances and exits of conveyorized degreasers immediately after the conveyor and exhaust are shutdown and removed just before they are started up.

TABLE OF CONTENTS

		Page
Preface		iii
Chapter 1.0	Introduction and Summary	1-1
1.1	Need to Regulate Solvent Metal Cleaning	1-1
1.2	Regulatory Approach	1-2
Chapter 2.0	Sources and Types of Emissions	2-1
2.1	Industry Description	2-1
2.2	Types of Degreasers and Their Emissions	2-4
2.2.1	Cold Cleaners	2-7
2.2.1.1	Design and Operation	2-7
2.2.1.2	Emissions	2-12
2.2.2	Open Top Vapor Degreasers	2-16
2.2.2.1	Design and Operation	2-16
2.2.2.2	Emissions	2-25
2.2.3	Conveyorized Degreasing	2-33
2.2.3.1	Design and Operation	2-33
2.2.3.2	Emissions	2-39
2.4	References	2-45
Chapter 3.0	Emission Control Technology	3-1
3.1	Emission Control Devices	3-1
3.1.1	Emission Control Devices	3-1
3.1.1.1	Improved Cover	3-2
3.1.1.2	High Freeboard	3-5

Page

3.1.1.3 Refrigerated Chillers 3-6

3.1.1.4 Carbon Adsorption 3-9

3.1.1.5 Safety Switches 3-14

3.1.2 Controls to Minimize Carry-Out 3-16

3.1.3 Controls for Both Solvent Bath and Carry-Out Emissions Combined 3-18

3.1.3.1 Automated Cover-Conveyor System 3-18

3.1.3.2 Refrigeration Condensation 3-20

3.1.4 Control of Waste Solvent Evaporation 3-22

3.1.4.1 Current Practices 3-22

3.1.4.2 Recommended Practices 3-23

3.1.5 Other Control Devices 3-27

3.1.5.1 Incineration 3-28

3.1.5.2 Liquid Absorption 3-28

3.2 Complete Control Systems 3-29

3.2.1 Cold Cleaning Control Systems 3-30

3.2.2 Control Systems for Open Top Vapor Degreasing 3-32

3.2.3 Control Systems for Conveyorized Degreasers 3-32

3.3 References 3-37

Chapter 4.0 Cost Analysis 4-1

4.1 Introduction 4-1

4.1.1 Purpose 4-1

4.1.2 Scope 4-1

4.1.3 Model Plants 4-2

4.1.4 Capital Cost Estimates 4-3

4.1.5 Annualized Costs 4-3

Page

4.2 Cold Cleaners 4-4

4.2.1 Model Plant Parameters 4-4

4.2.2 Control Costs 4-6

4.3 Open Top Vapor Degreasers 4-8

4.3.1 Model Plant Parameters 4-8

4.3.2 Control Costs 4-8

4.3.3 Cost Effectiveness 4-14

4.4 Conveyorized Degreasers 4-16

4.4.1 Model Plant Parameters 4-16

4.4.2 Control Costs 4-18

4.4.3 Cost Effectiveness 4-20

4.5 References 4-24

Chapter 5.0 Adverse Environmental Effects of Applying The Technology 5-1

5.1 Air Impacts 5-1

5.2 Water Impacts 5-1

5.2.1 Waste Solvent Disposal 5-1

5.2.2 Steam Condensate from Carbon Adsorption 5-2

5.2.2.1 Chlorinated Solvent in Steam Condensate 5-2

5.2.2.2 Stabilizers in Steam Condensate 5-3

5.2.3 Effluents from Water Separators 5-4

5.3 Solid Waste Impact 5-4

5.4 Energy Impact 5-5

5.5 Other Environmental Concerns 5-6

5.6 References 5-8

Chapter 6.0 Compliance Testing Methods and Monitoring Techniques 6-1

Page

6.1 Observation of Control Equipment and Operating Practices 6-2

6.2 Material Balance 6-2

6.3 Other Emission Tests 6-3

Chapter 7.0 Enforcement Aspects 7-1

7.1 Regulatory Approaches 7-2

7.1.1 Emission Standards 7-2

7.1.2 Equipment Standards 7-3

7.1.3 Operational Standards 7-4

7.1.4 Solvent Exemption Standards 7-5

7.2 Affected Facilities - Priorities 7-5

7.2.1 Definitions of Affected Facilities 7-5

7.2.2 Priorities of Enforcement 7-5

Appendix A.0 Emission Test Results

Appendix B.0 Calculations

LIST OF TABLES

		Page
Table 1	Control Systems for Cold Cleaning	v
Table 2	Control Systems for Open Top Vapor Degreasers	vi
Table 3	Control Systems for Conveyorized Degreasers	vii
Table 2-1	Common Metal Cleaning Solvents	2-3
Table 2-2	National Degreasing Solvent Consumption (1974)	2-5
Table 2-3	Emissions from Solvent Degreasers (1974)	2-6
Table 3-1	Control Systems for Cold Cleaning	3-31
Table 3-2	Complete Control Systems for Open Top Vapor Degreasers	3-33
Table 3-3	Control Systems for Conveyorized Degreasers	3-35
Table 4-1	Cost Parameters for Model Cold Cleaners	4-5
Table 4-2	Control Costs for Typical Cold Cleaners	4-7
Table 4-3	Cost Parameters for Model Open Top Vapor Degreasers	4-9
Table 4-4	Control Cost for Typical Size Open Top Vapor Degreaser	4-10
Table 4-5	Control Cost for Small Open Top Vapor Degreaser	4-11
Table 4-6	Cost Parameters for Model Conveyorized Degreasers	4-17
Table 4-7	Control Costs for Typical Conveyorized Degreasers	4-19

LIST OF FIGURES

		Page
Figure 2-1	Cold Cleaner	2-9
Figure 2-2	Cold Cleaner Emission Points	2-13
Figure 2-3	Open Top Vapor Degreaser	2-18
Figure 2-4	Basic Principle for Water Separator for Vapor Degreaser	2-20
Figure 2-5	Open Top Degreaser with Offset Condenser Coils	2-21
Figure 2-6	Two Compartment Degreaser with Offset Boiling Chamber	2-22
Figure 2-7	Two Compartment Degreaser	2-23
Figure 2-8	Degreaser with Lip Exhaust	2-24
Figure 2-9	Open Top Vapor Degreaser Emission Points	2-26
Figure 2-10	Cross Rod Conveyorized Degreaser	2-35
Figure 2-11	Monorail Conveyorized Degreaser	2-36
Figure 2-12	Vibra Degreaser	2-37
Figure 2-13	Ferris Wheel Degreaser	2-38
Figure 2-14	Mesh Belt Conveyorized Degreaser	2-40
Figure 2-15	Conveyorized Degreaser Emission Points	2-42
Figure 3-1	Refrigerated Freeboard Chiller	3-7
Figure 3-2	Carbon Adsorber	3-10
Figure 3-3	Adsorption Cycle	3-11
Figure 3-4	Desorption Cycle	3-12
Figure 3-5	Elevator Design of Degreaser - Vapor Type	3-19
Figure 3-6	Vapor Pressures of Several Solvents	3-21
Figure 3-7	External Still	3-25
Figure 4-1	Cost-Effectiveness of Alternative Control Options for Existing Open Top Vapor Degreasers	4-15
Figure 4-2	Cost-Effectiveness of Alternative Control Options for Existing Monorail Degreasers	4-21
Figure 4-3	Cost-Effectiveness of Alternative Control Options for Existing Cross-Rod Degreasers	4-23

1.0 INTRODUCTION AND SUMMARY

The purpose of EPA's series of control technique guideline documents is to provide guidance on emission reduction techniques which can be applied to existing sources in specific industries. The documents are to be used to assist States in revising their implementation plans (SIP's) to attain and maintain National Ambient Air Quality Standards (NAAQS). This document discusses volatile organic compound (VOC) emissions and applicable control techniques for organic solvent metal cleaning operations (degreasing with solvents).

1.1 NEED TO REGULATE SOLVENT METAL CLEANING

Solvent metal cleaning is a significant source of volatile organic compounds (VOC) and tends to be concentrated in urban areas where the oxidant NAAQS is likely to be exceeded. In 1975 solvent metal cleaning emitted about 725 thousand metric tons of organics. This represents about four percent of the national organic emissions from stationary sources. Presently, solvent metal cleaning is the fifth largest stationary source of organic emissions. Although emissions from solvent degreasing (i.e., metal cleaning) represent about four percent of nationwide VOC sources, the proportion is significantly higher in most urban areas, because of their high concentration of metalworking industries. For example,

the Southern California Air Quality Management District estimates that 14.8 percent of the stationary organic emissions in Los Angeles County are attributable to solvent degreasing.

Control technology is available to reduce hydrocarbon emissions from existing solvent metal cleaning operations. However, this technology has not been broadly applied largely because of unawareness of economic incentives and the absence of regulatory requirements. In 1974, for example, 16 states covered degreasing operations with solvent regulations identical or similar to Rule 66 of the Los Angeles County Air Pollution Control District. Since then, additional state and local agencies have adopted the same types of statutes. Generally, up to 3,000 pounds of VOC emissions per day are allowed from sources using solvents considered non-photochemically reactive under Rule 66 criteria. Since solvent metal cleaning operations rarely release more than that amount, they have usually complied with Rule 66 regulations merely by substitution. Regulatory incentive to institute control technology rather than substitution is necessary to achieve positive emission reduction.

1.2 REGULATORY APPROACH

Photochemical oxidant control strategies in the past have relied heavily on the substitution of solvents of relatively low photochemical reactivity to reduce emissions of higher reactivity VOC. Thus, total emissions did not necessarily decrease, only the make-up of those emissions changed. One problem with this approach was that many solvents classed as low reactivity materials have since been found to be moderately and in some cases highly reactive. EPA's current direction and the direction of this document is toward positive reductions of all VOC emissions. This is not only more rational from a standpoint of conservation but some low reactivity solvents are now suspected of contributing

to upper atmospheric ozone depletion. These reasons and others support the decision to concentrate on positive reduction rather than substitution.

Positive emission reduction from solvent metal cleaning should be attained through use of proper operating practices and retrofit control equipment. Proper operating practices are those which minimize solvent loss to the atmosphere. These include covering degreasing equipment whenever possible, proper use of solvent sprays, various means of reducing the amount of solvent carried out of the degreaser on cleaned work, prompt repair of leaking equipment, and most importantly, proper disposal of wastes containing volatile organic solvents. In addition to proper operating practices there are many control devices which can be retrofit to degreasers; however, because of the diversity in their designs, not all degreasers require all control devices. Small degreasers using room temperature solvent may require only a cover, whereas a large degreaser using boiling solvent may require a refrigerated freeboard chiller or a carbon adsorption system. Two types of control equipment which will be applicable to many degreaser designs are drainage facilities for cleaned parts and safety switches and thermostats which prevent large emissions due to equipment malfunction. The many degreaser designs along with the emissions characteristic of those designs and the factors affecting those emissions are described in Chapter 2. Control devices for each type of emission and control systems for each degreaser design are described in Chapter 3.

2.0 SOURCES AND TYPES OF EMISSIONS

2.1 INDUSTRY DESCRIPTION

Solvent metal cleaning describes those processes using non-aqueous solvents to clean and remove soils from metal surfaces. These solvents, which are principally derived from petroleum, include petroleum distillates, chlorinated hydrocarbons, ketones, and alcohols. Organic solvents such as these can be used alone or in blends to remove water insoluble soils for cleaning purposes and to prepare parts for painting, plating, repair, inspection, assembly, heat treatment or machining.

Solvent metal cleaning is usually chosen after experience has indicated that satisfactory cleaning is not obtained with water or detergent solutions. Availability, low cost and familiarity combine to make water the first consideration for cleaning; however, water has several limitations as a cleaning agent. For example, it exhibits low solubility for many organic soils, a slow drying rate, electrical conductivity, a high surface tension and a propensity for rusting ferrous metals and staining non-ferrous metals. All of these limitations can be overcome with the use of organic solvents.

A typical industrial degreasing solvent would be expected to dissolve oils, greases, waxes, tars, and in some cases water. Insoluble matter such as sand, metal chips, buffing abrasives or fibers, held by the soils, are flushed away.

A broad spectrum of organic solvents is available. Choices among the solvents are based on the solubility of the soil, toxicity, flammability, evaporation rate, effect on non-metallic portions of the part cleaned and numerous other properties. The most important properties of solvents commonly used in metal cleaning are summarized in Table 2-1.

As would be expected, the metal working industry is the major user of solvent metal cleaning. Eight SIC codes (Numbers 25 and 33 to 39) cover these industry categories. Examples of industries within these classifications are automotive, electronics, appliances, furniture, jewelry, plumbing, aircraft, refrigeration, business machinery and fasteners. All are frequent users of organic solvents for metal cleaning. However, the use of solvents for metal cleaning is not limited to these industries; solvent metal cleaning is also used in non-metal working industries such as printing, chemicals, plastics, rubber, textiles, glass, paper and electric power. Often, the function of the organic solvents in these industries is to provide maintenance cleaning of electric motors, fork lift trucks, printing presses, etc. Even in non-manufacturing industries, solvent metal cleaning is commonplace. Most automotive, railroad, bus, aircraft, truck and electric tool repair stations use these solvents. In short, most businesses perform solvent metal cleaning, at least part time, if not regularly. The number of companies routinely using solvent metal cleaning operations probably exceeds one million. Furthermore, large scale users may often have over 100 separate degreasing operations at one plant location.

Solvent metal cleaning is broken into three major categories: cold cleaning, open top vapor degreasing and conveyorized degreasing. In cold cleaning operations, all types of solvents are used depending on the type of parts to be cleaned. Vapor degreasing uses halogenated solvents because

Table 2-1

COMMON METAL CLEANING SOLVENTS****

Type of Solvent/ Solvent	Solvency for Metal Working Soils	Toxicity (ppm)	Flash Point	Evaporation Rate**	Water Solubility (% wt.)	Boiling Point (Range)	Pounds Per Gal.	Price Per Gal.
Alcohols								
Ethanol (95%)	poor	1000*	60°F	24.7	∞	165-176°F	6.76	$ 1.59
Isopropanol	poor	400*	55°F	19	∞	179-181°F	6.55	$ 1.26
Methanol	poor	200*	58°F	45	∞	147-149°F	6.60	$ 1.11
Aliphatic Hydrocarbons								
Heptane	good	500*	<20°F	26	<0.1	201-207°F	5.79	$ 0.86
Kerosene	good	500	149°F	0.63	<0.1	354-525°F	6.74	$ 0.66
Stoddard	good	200	105°F	2.2	<0.1	313-380°F	6.38	$ 0.62
Mineral Spirits 66	good	200	107°F	1.5	<0.1	318-382°F	6.40	$ 0.62
Aromatic Hydrocarbons								
Benzene***	good	10*	10°F	132	<0.1	176-177°F	7.36	--
SC 150	good	200	151°F	0.48	<0.1	370-410°F	7.42	$ 1.06
Toluene	good	200*	45°F	17	<0.1	230-232°F	7.26	$ 0.90
Turpentine	good	100*	91°F	2.9	<0.1	314-327°F	7.17	$ 2.40
Xylene	good	100*	81°F	4.7	<0.1	281-284°F	7.23	$ 0.96
Chlorinated Solvents								
Carbon Tetrachloride***	excellent	10*	none	111	<0.1	170-172°F	13.22	$ 3.70
Methylene Chloride	excellent	500*	none	363	0.2	104-105.5°F	10.98	$ 2.83
Perchloroethylene	excellent	100*	none	16	<0.1	250-254°F	13.47	$ 3.33
1,1,1-Trichloroethane	excellent	350*	none	103	<0.1	165-194°F	10.97	$ 2.78
Trichloroethylene	excellent	100*	none	62.4	<0.1	188-190°F	12.14	$ 3.13
Fluorinated Solvents								
Trichlorotrifluoro-ethane (FC-113)	good	1000*	none	439	<0.1	117°F	13.16	$ 7.84
Ketones								
Acetone	good	1000*	<0°F	122	∞	132-134°F	6.59	$ 1.45
Methyl ethyl ketone	good	200*	28°F	45	27	174-176°F	6.71	$ 1.74

*Federal Register, June 27, 1974, Vol. 39, No. 125.
**Evaporation Rate determined by weight loss of 50 mls in a 125 ml beaker on an analytical balance (Dow Chemical Co. method).
***Not recommended or sold for metal cleaning (formerly standards in industry).
****Primary source from The Solvents and Chemicals Companies "Physical Properties of Common Organic Solvents" and Price List (July 1, 1975).

they are not flammable and their vapors are much heavier than air.

The most recent estimates are that there are 1,300,000 cold cleaning units in the United States, with about 70 percent of these devoted to maintenance or servicing operations and the remainder used for manufacturing operations. There are also an estimated 22,000 open top vapor degreasers and 4,000 conveyorized degreasers. Of the estimated 726,000 metric tons per year of solvent used for degreasing, roughly 60 percent is for cold cleaning, 25 percent for open top vapor degreasing and 15 percent for conveyorized degreasing. Tables 2-2 and 2-3 summarize the above information. Emissions are discussed in detail in the next chapter.

2.2 TYPES OF DEGREASERS AND THEIR EMISSIONS

There are three basic types of organic solvent degreasers: cold cleaners, open top vapor degreasers, and conveyorized degreasers. Cold cleaners are usually the simplest and least expensive. Their solvent is usually near room temperature, but is sometimes heated. The temperature, however, always remains below the solvent's boiling point. A cold cleaner is a tank of solvent usually including a cover for nonuse periods. Inside is a work surface or basket suspended over the solvent. An open top vapor degreaser resembles a large cold cleaner; however, the solvent is heated to its boiling point. This creates a zone of solvent vapor that is contained by a set of cooling coils. Both the cold cleaner and the open top vapor degreaser clean individual batches of parts; thus, they are termed "batch loaded". A conveyorized degreaser is loaded continuously by means of various types of conveyor systems, and may either operate as a vapor degreaser as a cold cleaner.

Table 2-2

National Degreasing Solvent Consumption* (1974)

Solvent Type	Solvent Consumption (10^3 metric tons)		
	Cold cleaning	Vapor degreasing	All degreasing
Halogenated:			
Trichloroethylene	25	128	153
1,1,1 Trichloroethane	82	80	162
Perchloroethylene	13	41	54
Methylene Chloride	23	7	30
Trichlorotrifluoroethane	10	20	30
	153	276	429
Aliphatics	222		222
Aromatics:			
Benzene	7		
Toluene	14		
Xylene	12		
Cyclohexane	1		
Heavy Aromatics	12		
	46	0	46
Oxygenated:			
Ketones:			
Acetone	10		
Methyl Ethyl Ketone	8		
Alcohols:			
Butyl	5		
Ethers	6		
	29	~0	29
Total Solvents:	450**	276***	726
Range of Accuracy:	(±125)	(±25)	(±145)

*See Appendix B.1 for background on the above estimates.

**Includes 25,000 metric tons from non boiling convevorized degreasers.

***Includes 75,000 metric tons from conveyorized vapor degreasers.

Table 2-3

Emissions from Solvent Degreasers (1974)

Type Degreaser	Estimated National Emission (10^3Mt/yr)	Approximate No. of Units Nationally	Averaged Emission Rate per Unit (Mt/yr)
Cold Cleaners	380*	1,220,000	0.3
Open Top Vapor Degreasers	200	21,000	10
Conveyorized Degreasers	100	3,700	27

*380 emission = 450 consumption (from Table 2-2) minus 25 for wiping losses, 25 for conveyorized cold cleaning and 20 for non-evaporative waste solvent disposal (incineration and non-evaporating landfill encapsulation).

2.2.1 Cold Cleaners

Cold cleaner operations include spraying, brushing, flushing and immersion. The solvent occasionally is heated in cold cleaners but always remains well below its boiling point.

Cold cleaners are defined here not to include nonboiling conveyorized degreasers which are covered in Section 2.3. Wipe cleaning is also not included.

Cold cleaners are estimated to result in the largest total emission of the three categories of degreasers. This is primarily because of the extremely large number of these units (over 1 million nationally) and because much of the disposed of waste solvent is allowed to evaporate. It is estimated that cold cleaners emit 380 thousand metric tons of organics per year, this being about 55 percent of the national degreasing emissions (see Appendix B.1). Cold cleaning solvents nationally account for almost all of the aliphatic, aromatic, and oxygenated degreasing solvents and about one-third of halogenated degreasing solvents.

Despite the large aggregate emission, the average cold cleaning unit generally emits only about one-third ton per year of organics, with about one-half to three-fourths of that emission resulting from evaporation of the waste solvent at a disposal site.

2.2.1.1 Design and Operation -

Typical Model - A typical cold cleaner is shown in Figure 2-2. The dirty parts are cleaned manually by spraying and by soaking in the dip tank. The solvent in the dip tank is often agitated to enhance the cleaning action. After cleaning, the basket of cleaned parts may be suspended over the solvent to allow the parts to drain, or the cleaned parts may be drained on an external drainage rack (not shown) which routes the drained solvent back into the cleaner. The cover is intended to be closed whenever parts are not being handled in the cleaner. The cold cleaner described and shown in Figure 2-1 is most often used for maintenance cleaning of metal parts. A typical size of such a maintenance cold cleaner is about 0.4 m^2 (4 ft^2) of opening and about 0.1 m^3 (30 gallon) capacity.

Applications - The two basic types of cold cleaners are maintenance cleaners and manufacturing cleaners. The maintenance cold cleaners are usually simpler, less expensive, and smaller. They are designed principally for automotive and general plant maintenance cleaning.

Manufacturing cold cleaners usually perform a higher quality of cleaning than do maintenance cleaners and are thus more specialized. Manufacturing cold cleaning is generally an integral stage in metalworking production. Manufacturing cold cleaners are fewer in number than maintenance cleaners but tend to emit more solvent per unit because of the larger size and work load. Manufacturing cleaners use a wide variety of solvents, whereas maintenance cleaners use mainly petroleum solvents such as mineral spirits (petroleum distillates, and Stoddard solvents). Some cold cleaners can serve both maintenance and manufacturing purposes and thus are difficult to classify.

The type of cold cleaner to be used for a particular application depends on two main factors: (1) the work load and (2) the required cleaning

Figure 2-1

COLD CLEANER

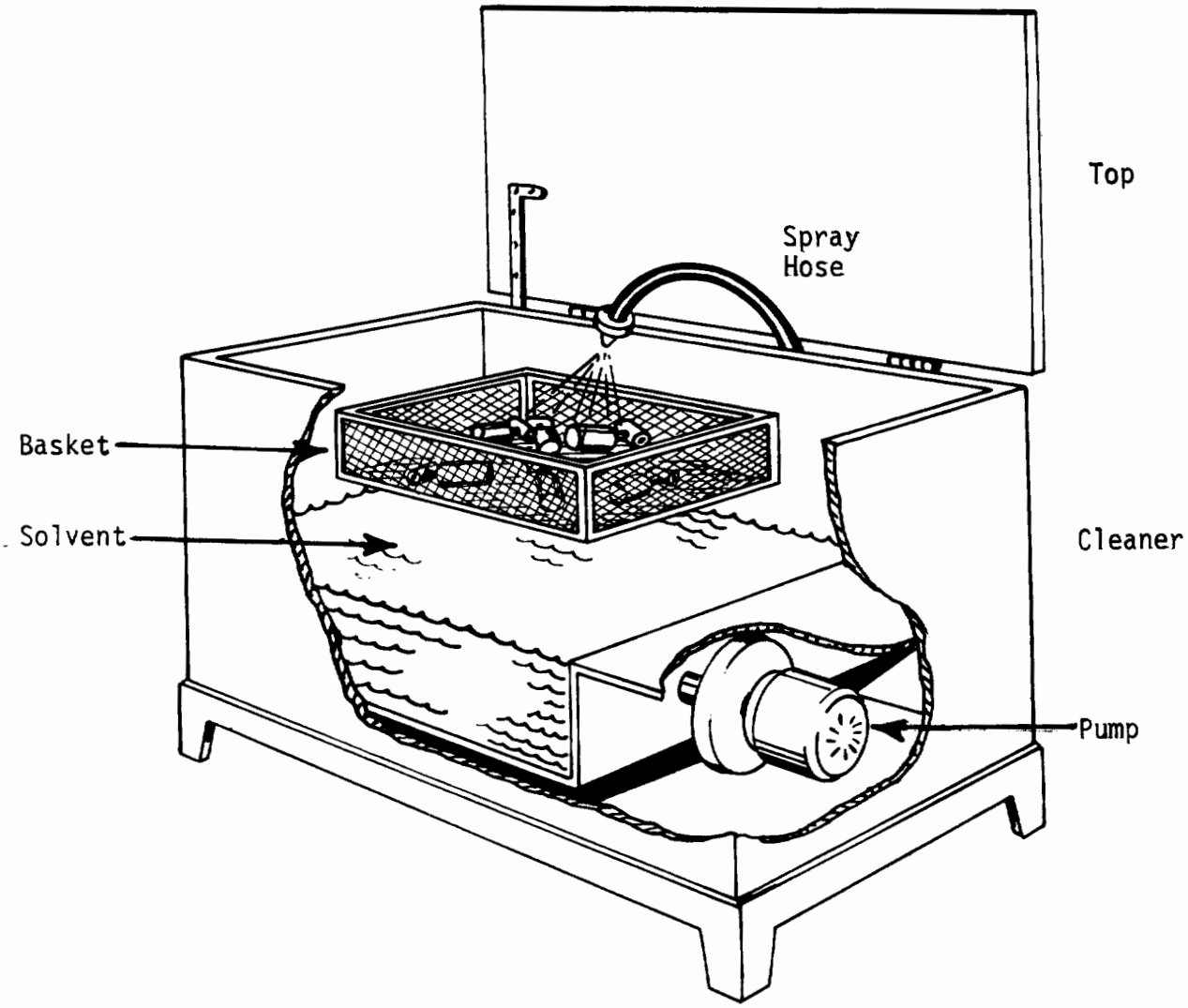

effectiveness. Work load is a function of tank size, frequency of cleaning, and type of parts. Naturally, the larger work loads require larger degreasers. The more frequently the cold cleaner is used, the greater the need to automate and speed up the cleaning process; more efficient materials handling systems help automate, while agitation speeds cleaning. Finally, the type of parts to be cleaned is important because more thorough cleaning and draining techniques are necessitated for more complexly shaped parts.

The required cleaning effectiveness establishes the choice of solvent and the degree of agitation. For greater cleaning effectiveness, more powerful solvents and more vigorous agitation are used. Generally, emissions will increase with agitation and with higher solvency.

Equipment Design - Although classifying cold cleaners according to maintenance or manufacturing application is a convenient initial approach, manufacturing cold cleaners vary so widely in design that no one typical design can adequately describe them. Thus, a more specific classification of manufacturing cold cleaners must also consider the equipment design. The most important design factors are tank design, agitation technique, and the material handling of parts to be cleaned.

The two basic tank designs are the simple spray sink and the drip tank. The simple spray sink is usually less expensive. It is more appropriate for cleaning applications that are not difficult and require only a relatively low degree of cleanliness. The dip tank provides more thorough cleaning through soaking of dirty parts. Dip tanks also can employ agitation, which improves cleaning efficiency.

Agitation is generally accomplished through use of pumping, compressed air, vertical motion or ultrasonics. In the pump agitated cold cleaner, the solvent is rapidly circulated in the soaking tank. Air agitation involves

dispersing compressed air from the bottom of the soaking tank; the air bubbles providing a scrubbing action. In the vertically agitated cold cleaner, dirty parts move up and down while submerged in order to enhance the cleaning process. Finally, in the ultrasonically agitated tank, the solvent is vibrated by high frequency sound waves. Ultrasonically agitated liquids often need to be heated to specific temperatures to achieve optimum cavitation. Cavitation is the implosion of microscopic vapor cavities within the liquid solvent. The implosions, which are caused by pressure differentials of the sound waves in the solvent, break down the dirt film on the parts.

The designs for material handling in cold cleaning systems are almost endless, but they are generally divided into manual and batchloaded conveyorized systems. (Continuously loaded conveyorized systems are described separately in Section 2.3). Manual loading is used for simple, small-scale cleaning operations and is self explanatory. Batchloaded conveyorized systems are for use in the more complex, larger-scale cleaning operations. These systems may include an automated dip, which automatically lowers, pauses, and raises the work load. They may also include systems, such as a roller conveyor, to transfer the work load to other operations. In another variation, two or more dip tanks may be used in series. These tanks may contain increasingly pure solvent in a "cascade" cleaning system. The consecutive dip tanks may also contain different cleaning solutions for more complex operations and may even be combined with vapor cleaning and aqueous systems.

The materials handling technique can be important in reducing emissions from cold cleaning. Regardless of the system, the work loads need to be handled so that the solvent has sufficient time to drain from the cleaned parts into an appropriate container. Drainage facilities are described in Section 3.1.2.

2.2.1.2 Emissions -

Solvent evaporates both directly and indirectly from the cold cleaners. The emission rates vary widely; nevertheless, the average emission rate, calculated from national consumption data, is estimated to be about 0.3 metric ton per year. Maintenance and manufacturing cold cleaners are estimated to emit approximately 0.25 and 0.5 metric tons per year, respectively (see Appendix B.2.2). Data from the Safety Kleen Corporation reports only 0.17 metric tons per year for thier cold cleaner. However, their emissions are expected to be lower than others because most of the waste solvent from Safety Kleen units is distilled and recycled by the company.

Emissions from a cold cleaner occur through: (1) bath evaporation, (2) solvent carry-out, (3) agitation, (4) waste solvent evaporation, and (5) spray evaporation. These are depicted in Figure 2-2 and discussed in the following sections.

Bath Evaporation - Bath evaporation can be greatly reduced through use of a cover. Generally, the cover should be closed whenever the parts are not being handled in the cold cleaner. Although covers are standard equipment on most cold cleaners, keeping the cover closed requires conscientious effort on the part of the operator and his supervision. As will be discussed in Section 3.1.1, there are various means of inducing the operator to close the cover more frequently.

Where solvents much more volatile than mineral spirits are used, adequate freeboard height is important to reduce evaporation. Freeboard height is the distance from the solvent to the top edge of the cold cleaner. The requirement for freeboard height is most commonly expressed as freeboard ratio, with freeboard ratio being defined as the ratio of freeboard height to degreaser width (not length).

Excessive drafts in the workshop can significantly increase solvent bath evaporation. Thus, room and exhaust ventilation should be no greater than is

1. use of a manual cover;
2. use of a manual or powered cover in combination with extended freeboard;
3. refrigerated chiller;
4. carbon adsorber;

As in the case of cold cleaners, incremental costs for housekeeping controls on open top vapor degreasers are not presented because they appear to be negligible.

With regard to conveyorized vapor degreasers, control cost estimates will be presented for facilities that primarily use trichloroethylene or perchloroethylene solvents. The control cost estimates will reflect the use of the following techniques:

a. carbon adsorber
b. refrigerated chillers

Again, incremental costs for housekeeping are not presented because they appear to be negligible.

4.1.3 Model Plants

Control cost estimates are presented for typical model degreasers in the metal cleaning industry. Specific model plant parameters will be presented in the subsequent portions of this chapter. Admittedly, control costs may vary from one installation to another, perhaps even appreciably from the costs described for the models in this chapter. However, the difficulty of obtaining actual plant control costs requires use of model plants. To the extent possible, EPA has incorporated actual plant cost information into the cost analysis.

necessary to provide safe levels for the operator's health and plant's protection.

Agitation Emissions - Agitation increases emissions. The rate of emission depends upon: (1) use of the cover, (2) agitation system adjustments and (3) volatility of the solvent. If the cover is kept closed during agitation, then emissions usually are insignificant. However, agitation emissions can increase dramatically with the cover open. This is especially true with ultrasonic agitation of solvents heated to their optimum cavitation temperature. The bath should also be agitated for no longer than necessary to complete the cleaning. Poor adjustment of the agitation system may also increase emissions. In particular, the air flow into air agitated cleaners should be about 0.01 to 0.03 m^3 per minute per square meter of opening.

EPA tests on cold cleaners indicate that the volatility of the solvent greatly affects emissions due to agitation. Emissions of low volatility solvents increase significantly with agitation; however, contrary to what one might expect, agitation causes only a small increase in emissions of high volatility solvents. This is believed to be due to the already high unagitated evaporation rate of high volatility solvents (see Appendix A). Little difference was found between the effects of pump agitation and air agitation.

Carry-Out Emissions - Carry-out emissions depend on the existence and use of a drainage facility. Drainage facilities are racks or shelves used for draining excess solvent off cleaned parts. The drainage facility is standard equipment for some cold cleaners and is easily and inexpensively retrofitted for most other cold cleaners. Drainage facilities are described further in Section 3.1.2.

Although installation of a drainage facility is usually no problem, it will sometimes require a special effort to fully use the facility. As recommended from ASTM D-26, cleaned parts should drain at least 15 seconds.[1] For rapid pace work, such as automotive repair, this time may be perceived as too

delaying; nonetheless, the 15 second drain time should be adhered to.

Waste Solvent Evaporation - Waste solvent evaporation is the greatest source of emissions from cold cleaning. The amount of waste solvent disposed of depends on the size of the cold cleaner and on the frequency of disposal. When the cleaning job removes large quantities of oil and other contaminants, or requires a high degree of cleanliness, the solvent will be disposed of more frequently. Conversely, if the cold cleaner is equipped with an effective filter, as many cold cleaners present are, then solid impurities are removed and disposal is required less frequently.

Waste solvent evaporation depends not only upon the amount but also upon the method of disposal. Acceptable methods of handling waste solvent include proper incineration, distillation, and chemical landfilling, where the waste solvent is buried in enclosed containers and encapsulated by impermeable soil. Disposal routes that result in total emission to the environment include flushing into sewers, spreading waste solvent for dust control, such as on dirt roads, and landfilling where the solvent can evaporate or leach into the soil. Waste solvent evaporation is discussed further in Section 3.1.4.

Spray Evaporation - Evaporation from solvent spraying will increase with the pressure of the spray, the fineness of the spray, and the tendency to splash and overspray out of the tank. Evaporation is also greater when the spray is used constantly and when volatile solvents are used. Preferrably, the spraying pressure should be less than 10 psig, and the spray should be a solid, fluid stream.[2] The solvent loss from overspraying and splashing can usually be eliminated by sensible design and careful operation.

Solvent Type - The type of solvent is a factor that greatly affects the emission rate from the cold cleaner. The volatility of the solvent at the operating temperature is the single most important variable.

More toxic organics are rarely used in degreasers, but when they are they tend to be much better controlled to protect workers and to comply with OSHA regulations. These include carbon tetrachloride, benzene and methyl ethyl ketone.

The price of the solvent influences the care that is taken to conserve it. Thus, more expensive solvents are emitted less. In addition, the higher the price of the solvent, the more likely that the wastes will be recovered, and the more economical control will become.

2.2.2 Open Top Vapor Degreasers

Vapor degreasers clean through the condensation of hot solvent vapor on colder metal parts. Open top vapor degreasers are batch loaded, i.e., they clean only one work load at a time.

Open top vapor degreasers are estimated to result in the second largest emission of the three categories of degreasers. It is estimated that open top vapor degreasers emit 200 thousand metric tons of organics per year, this being about 30 percent of the national degreasing emissions (see Appendix B.3).

2.2.2.1 Design and Operation -

The Cleaning Process - In the vapor degreaser, solvent vapors condense on the parts to be cleaned until the temperature of the parts approaches the boilin point of the solvent. The condensing solvent both dissolves oils and provides a washing action to clean the parts. The selected solvents boil at much lower temperatures than do the contaminants; thus, the solvent/soil mixture in the degreaser boils to produce an essentially pure solvent vapor.

The simplest cleaning cycle involves lowering the parts into the vapor zone so that the condensation action can begin. When condensation ceases, the parts are slowly withdrawn from the degreaser. Residual liquid solvent on the

parts rapidly evaporates as the parts are removed from the vapor zone. The cleaning action is often increased by spraying the parts with solvent (below the vapor level) or by immersing them into the liquid solvent bath.

Basic Design - A typical vapor degreaser, shown in Figure 2-3, is a tank designed to produce and contain solvent vapor. At least one section of the tank is equipped with a heating system that uses steam, electricity, or fuel combustion to boil the solvent. As the solvent boils, the dense solvent vapors displace the air within the equipment. The upper level of these pure vapors is controlled by condenser coils located on the sidewalls of the degreaser. These coils, which are supplied with a coolant such as water, are generally located around the entire inner surface of the degreaser, although for some smaller equipment they are limited to a spiral coil at one end of the degreaser. Most vapor degreasers are also equipped with a water jacket which provides additional cooling and prevents convection of solvent vapors up hot degreaser walls.

The cooling coils must be placed at some distance below the top edge of the degreaser to protect the solvent vapor zone from disturbance caused by air movement around the equipment. This distance from the top of the vapor zone to the top of the degreaser tank is called the freeboard and is generally established by the location of the condenser coils. The freeboard is customarily 50 to 60 percent of the width of the degreaser for solvents with higher boiling points, such as perchloroethylene, trichloroethylene, and 1,1,1-trichloroethane. For solvents with lower boiling points, such as trichlorotrifluoroethane and methylene chloride, degreasers have normally been designed with a freeboard equal to at least 75 percent of the degreaser width. Higher freeboards than those recommended will further reduce solvent emissions; however, there comes a point where difficulty associated with moving parts into and out

Figure 2-3

OPEN TOP DEGREASER

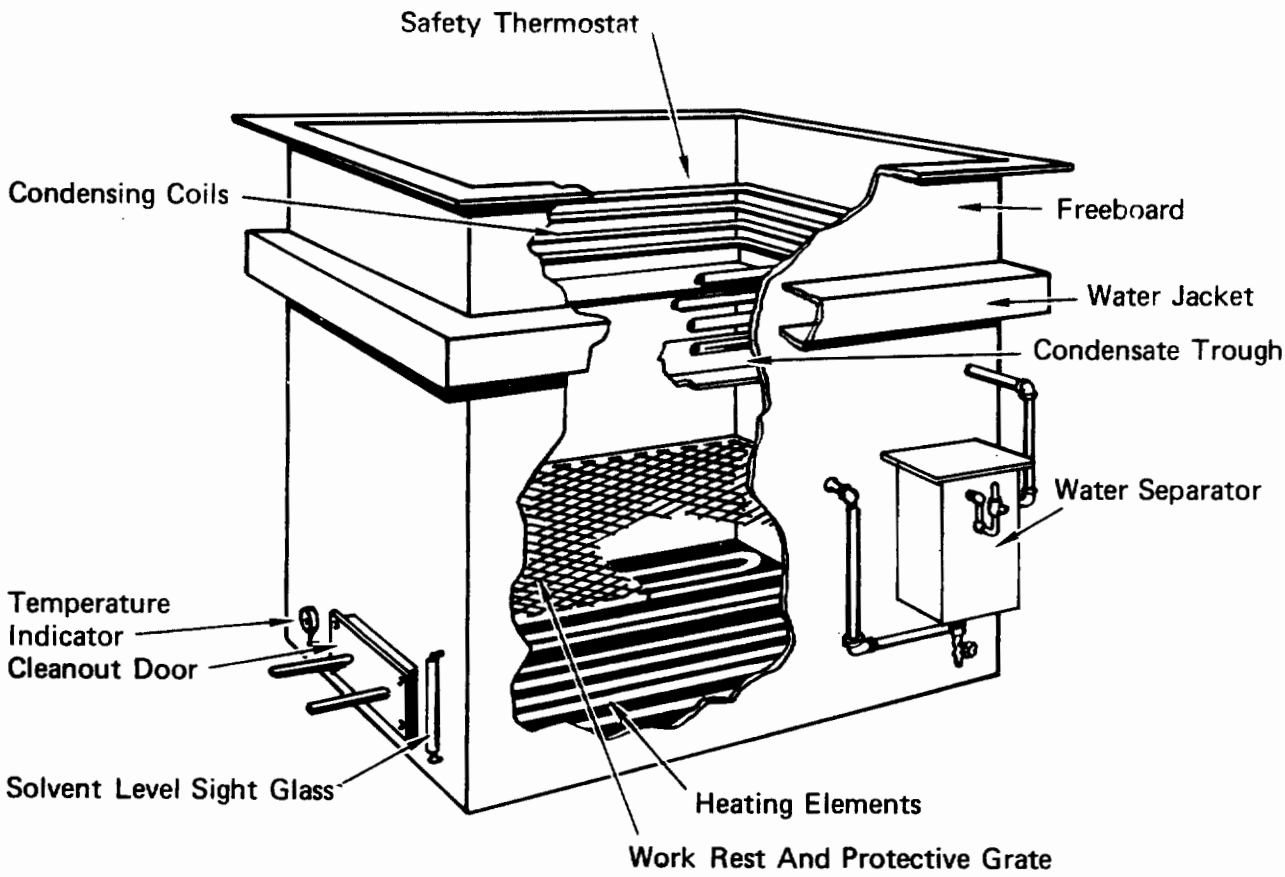

of a degreaser with a high freeboard outweighs the benefit of increased emission control.

Nearly all vapor degreasers are equipped with a water separator such as that depicted in Figure 2-4. The condensed solvent and moisture are collected in a trough below the condenser coils and directed to the water separator. The water separator is a simple container which allows the water (being immiscible and less dense than solvents) to separate from the solvent and decant from the system while the solvent flows from the bottom of the chamber back into the vapor degreaser.

Variations in Design - Figure 2-5, 2-6 and 2-7 show the most popular open top vapor degreasers in use. These units range in size from table top models with open top dimensions of 1 foot by 2 feet up to units which are 110 feet long and 6 feet wide. A typical open top vapor degreaser is about 3 feet wide by 6 feet long.

Historically, degreasers of the typical size and smaller have been supplied with a single piece, unhinged, metal cover. The inconvenience of using this cover has resulted in general disuse or, at best, use only during prolonged periods when the degreaser would not be operated, for example on weekends. More recently, small open top degreasers have been equipped with manually operated roll-type plastic covers, canvas curtains, or hinged and counter-balanced metal covers. Larger units have been equipped with segmented metal covers. Finally, most of the larger open top vapor degreasers (200 square feet and larger) and some of the smaller degreasers have had manually controlled powered covers.

Lip exhausts such as those shown in Figure 2-8 are not uncommon although in use on less than half of the existing open top vapor degreasers. These exhaust systems are designed to capture solvent vapors escaping from the degreasers and carry them away from the operating personnel. To the extent

Figure 2-4

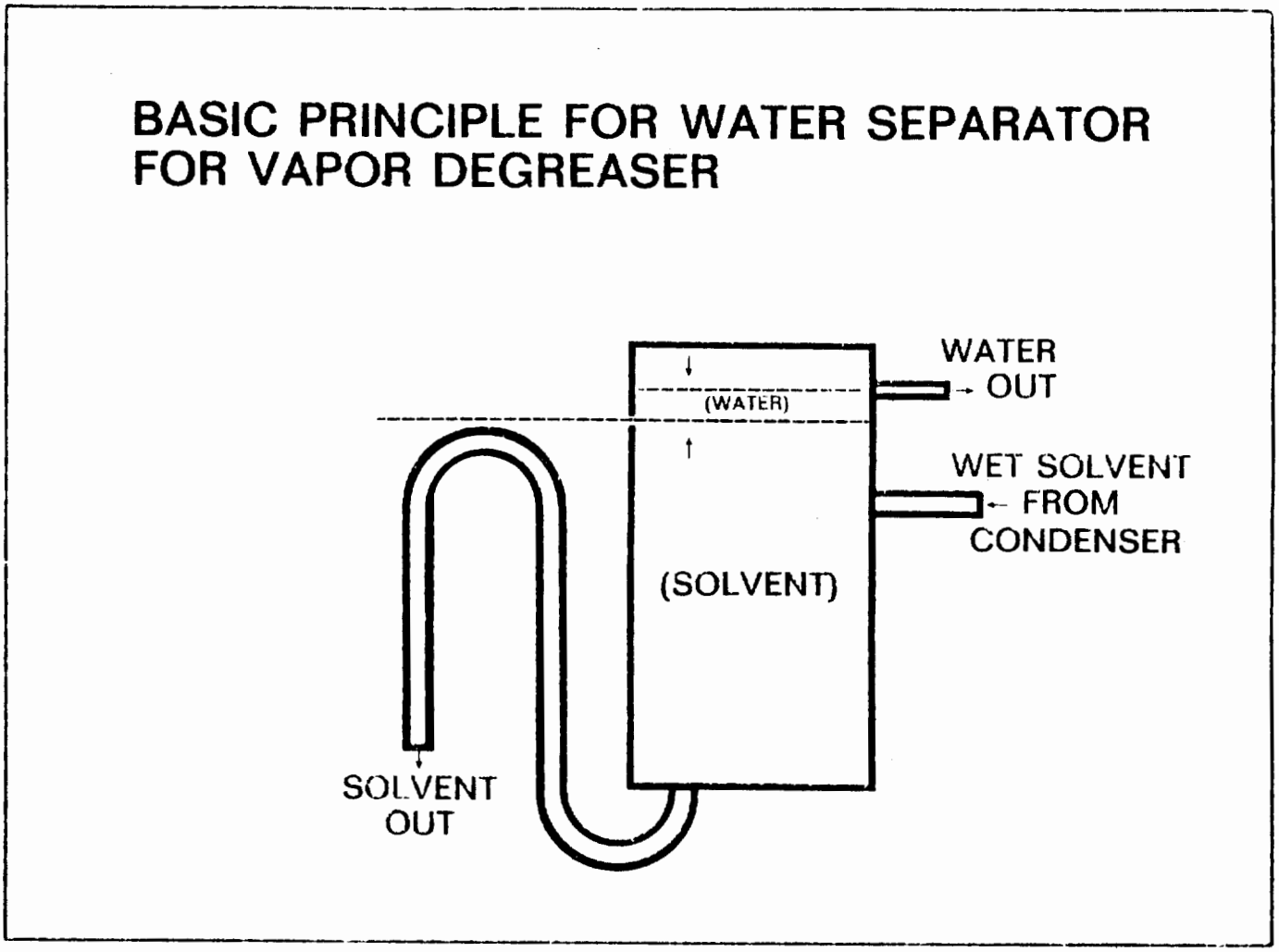
BASIC PRINCIPLE FOR WATER SEPARATOR
FOR VAPOR DEGREASER
WATER
OUT
(WATER)
WET SOLVENT
FROM
CONDENSER
(SOLVENT)
SOLVENT
OUT

Figure 2-5
OPEN TOP DEGREASER WITH OFFSET CONDENSER COILS

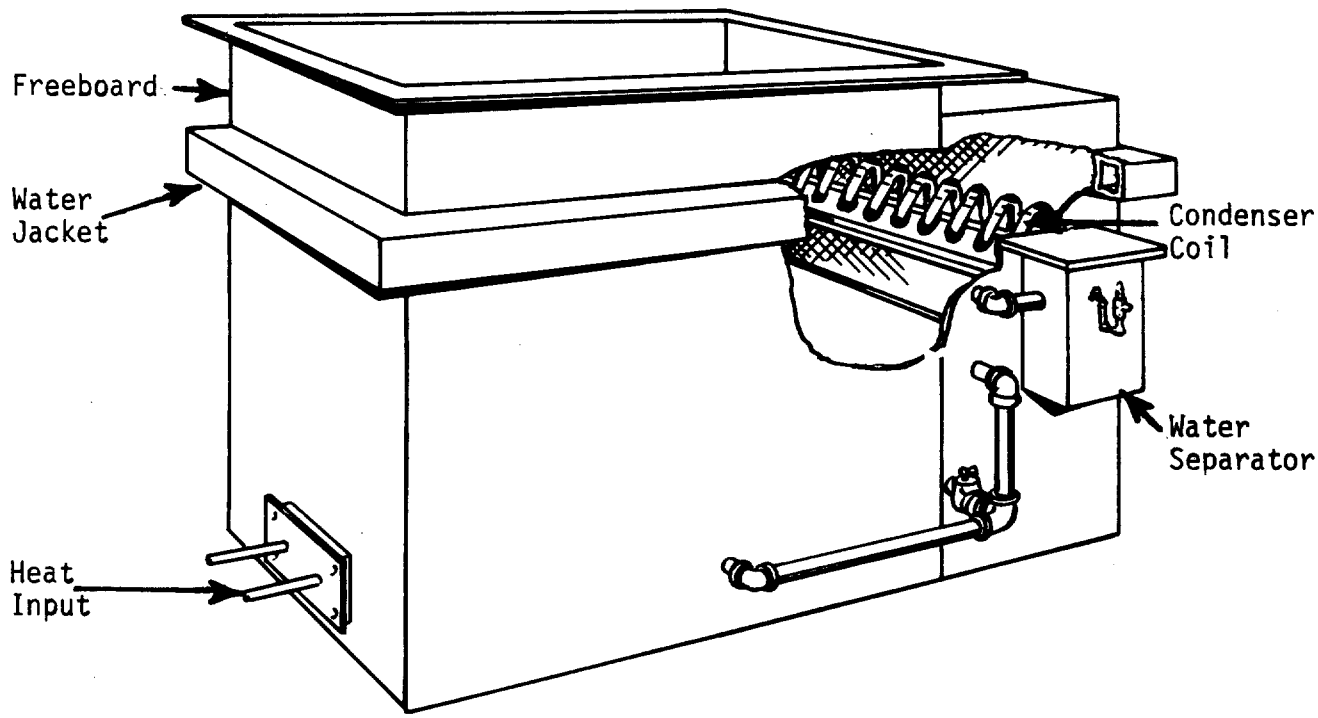

Figure 2-6
TWO COMPARTMENT DEGREASER WITH OFFSET BOILING CHAMBER

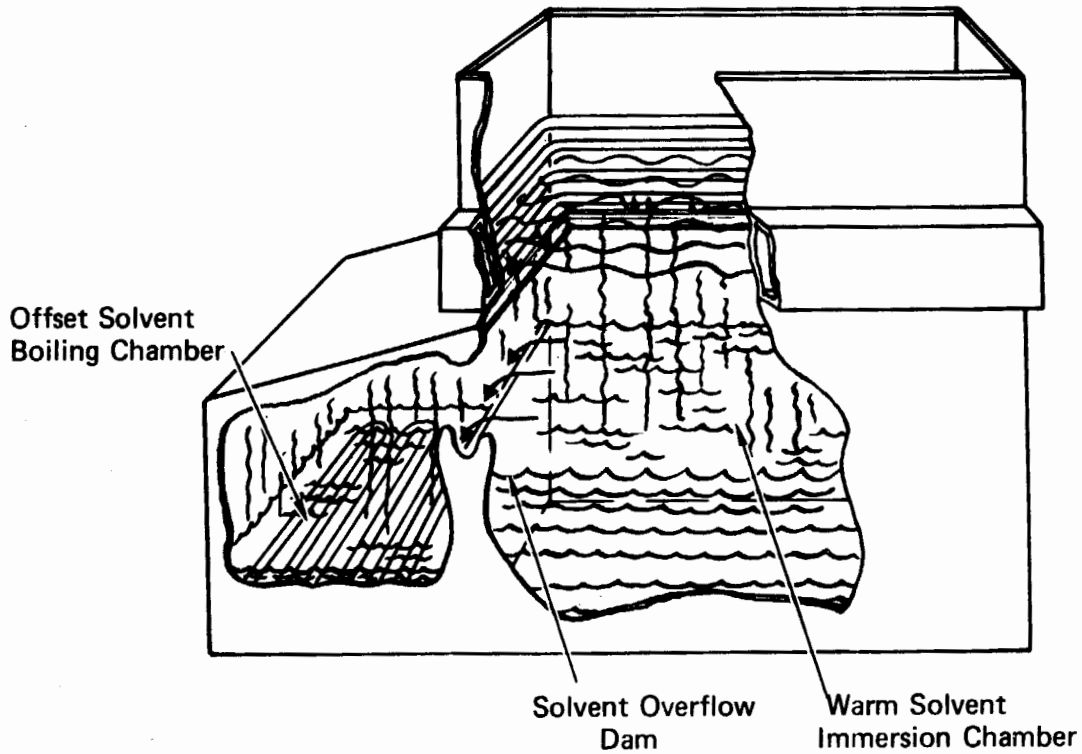

Figure 2-7
TWO COMPARTMENT DEGREASER

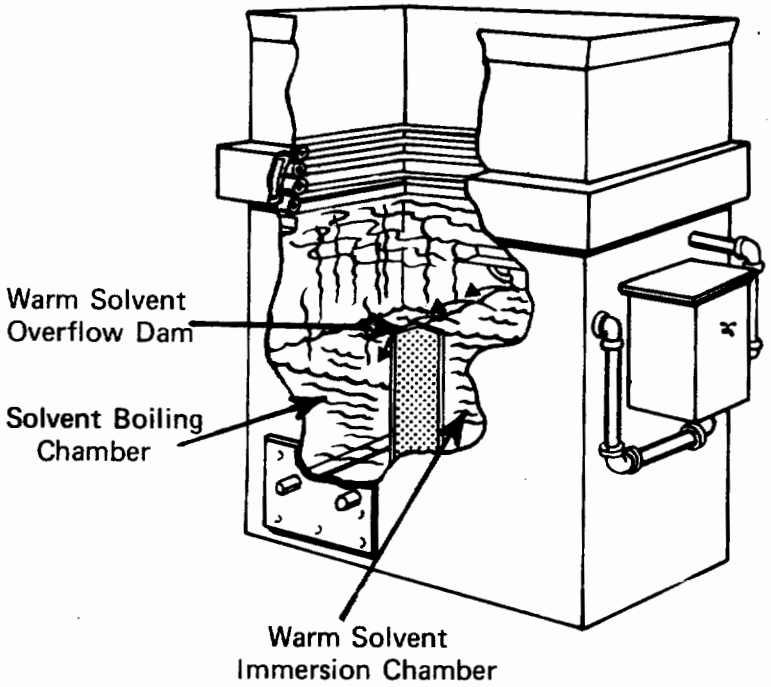

Figure 2-8
DEGREASER WITH LIP EXHAUST

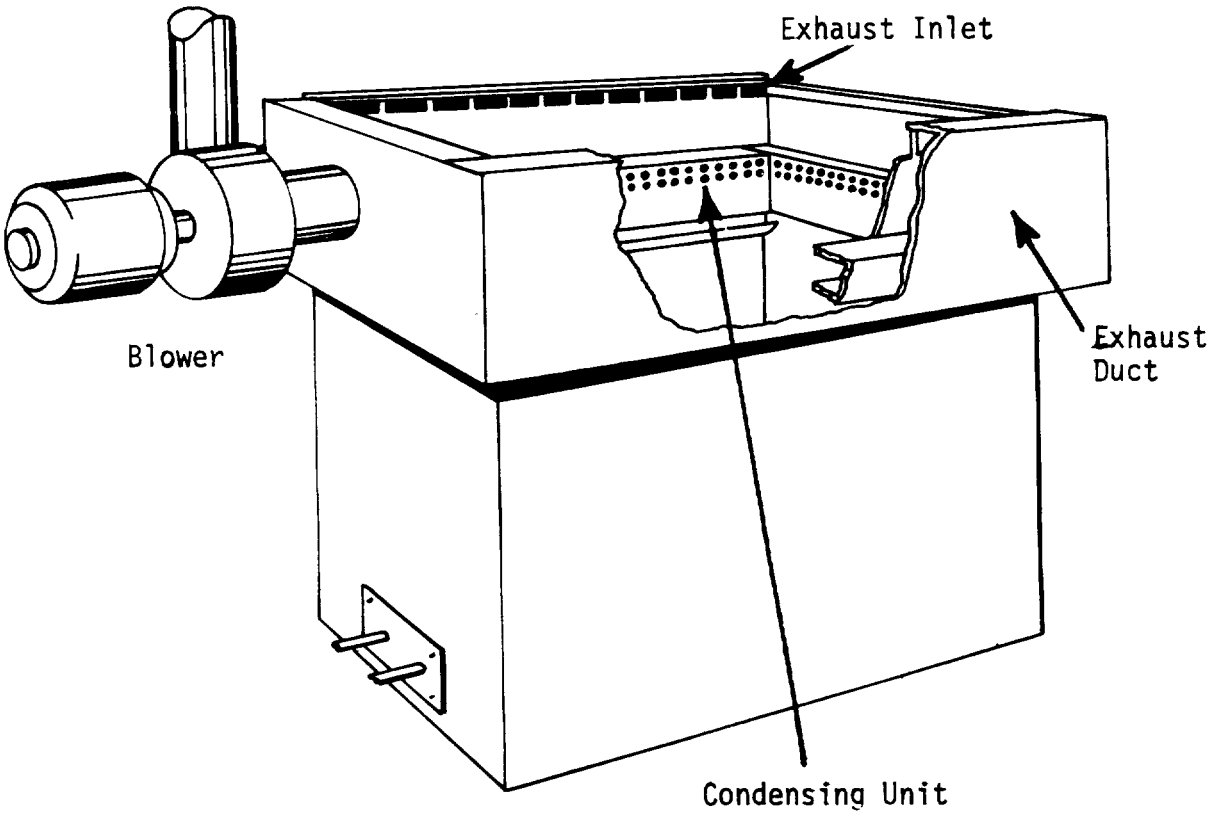

that they disturb the vapor zone, they increase solvent losses.[3] For properly designed exhaust systems, the covers close below the lip exhaust inlet level.

Applications - Open top vapor degreasers are usually less capital intensive than conveyorized systems, but more capital intensive than cold cleaning equipment. They are generally located near the work which is to be cleaned at convenient sites in the plant, whereas conveyorized vapor degreasers tend to be located at central cleaning stations requiring transport of parts for cleaning. Open top degreasers operate manually and are generally used for only a small portion of the workday or shift.

Open top vapor degreasers are found primarily in metal working plants, as described previously. Furthermore, the larger the plant the more likely it will use vapor degreasers instead of cold cleaners. Vapor degreasers are generally not used for ordinary maintenance cleaning of metal parts, because cold cleaners can usually do this cleaning at a lower cost. An exception may be maintenance cleaning of electrical parts by means of vapor degreasers because a high degree of cleanliness is needed and there is intricacy of design.

2.2.2.2 Emissions -

Unlike cold cleaners, open top vapor degreasers lose a relatively small proportion of their solvent in the waste material and as liquid carry-out. Rather, most of the emissions are those vapors that diffuse out of the degreaser. As with cold cleaning, open top vapor degreasing emissions depend heavily on the operator. The major types of emissions from open top vapor degreasers are depicted in Figure 2-9.

An average open top vapor degreaser emits about 2.5 kilograms per hour per m^2 of opening (0.5 pounds per hour ft^2). This estimate is derived from

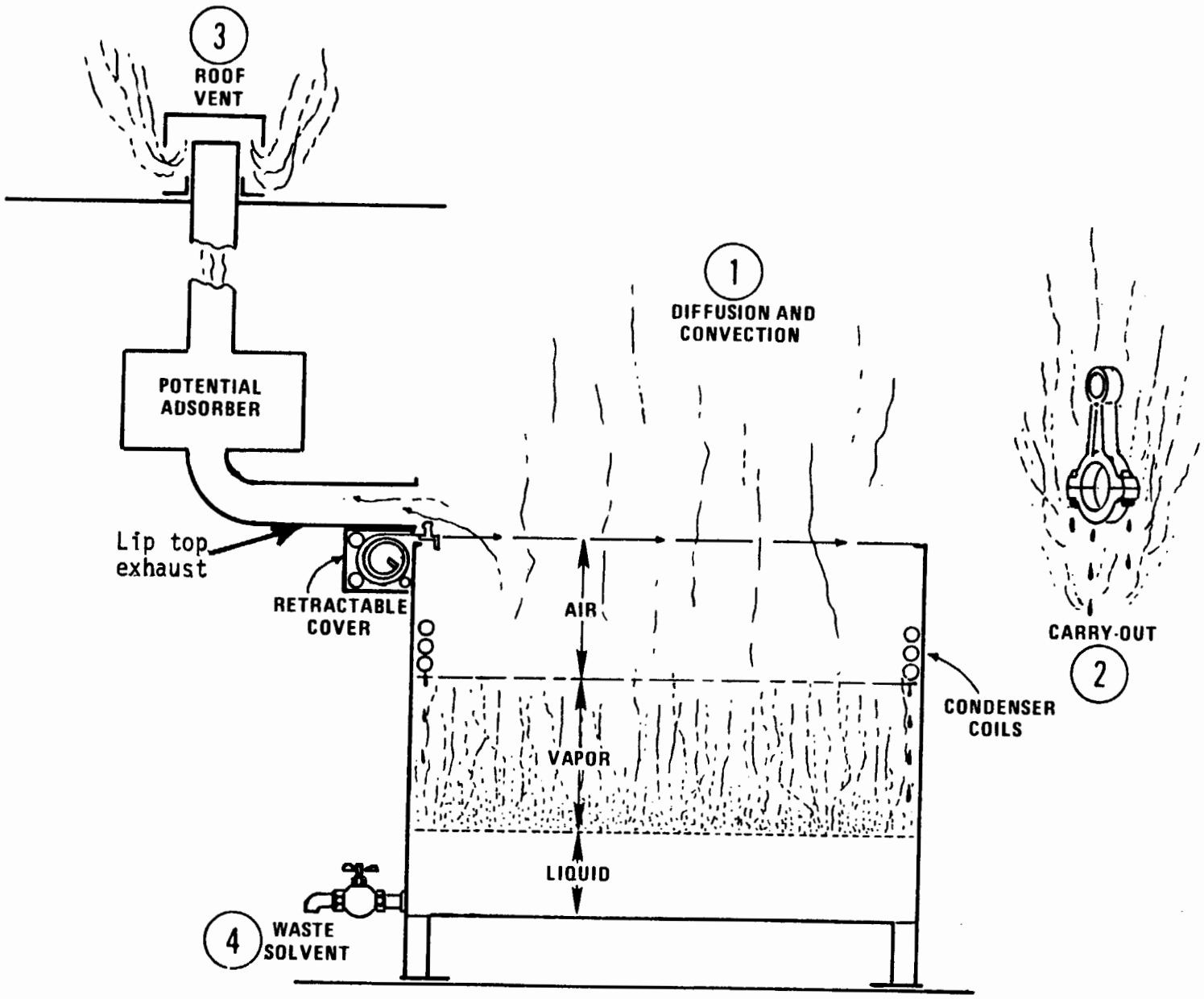

Figure 2-9. OPEN TOP DEGREASER EMISSION POINTS

national consumption data on vapor degreasing solvents and from seven EPA emission tests summarized in Appendix A. Assuming an average open top vapor degreaser would have an open top area of about 1.67 m^2 (18 ft^2), a typical emission rate would be 4.2 kilograms per hour or 9,500 kilograms per year (9 pounds per hour or 10 tons per year).

Diffusion Losses - Diffusion is the escape of solvent vapors from the vapor zone out of the degreaser. Solvent vapors mix with air at the top of the vapor zone. This mixing increases with drafts and with disturbances from cleaned parts being moved into and out of the vapor zone. The solvent vapors thus diffuse into the room air and into the atmosphere. These solvent losses include the convection of warm solvent-laden air upwards out of the degreaser.

Diffusion losses from the open top vapor degreaser can be minimized by the following actions:

a. Closing the cover,

b. Minimizing drafts,

c. Providing sufficient cooling by the condensing coils,

d. Spraying only below the vapor level,

e. Avoiding excessively massive work loads,

f. Maintaining an effective water separator,

g. Promptly repairing leaks.

The cover must be closed whenever the degreaser is not in use. This includes shutdown hours and times between loads. Cover design is also important. Improved designs for the cover can make it easier to use thereby facilitating more frequent closure. Covers should also be designed to be closed while a part is being cleaned in the degreaser.

Drafts can be minimized by avoiding the use of ventilation fans near the

degreaser opening and by placing baffles on the windward side of the degreaser. A baffle is simply a vertical sheet of material placed along the top of the degreaser to shield the degreaser from drafts.

Sufficient cooling by the condensing coils should be attained by following design specifications for the degreaser. Cooling rate is a function of solvent type, heat input rate, coolant temperature and coolant flow. If the vapor level does not rise above the midpoint of the cooling coils, then the cooling rate is probably adequate.[4]

The solvent must not be sprayed above the vapor level because such spraying will cause solvent vapors to mix with the air and be emitted. When this occurs, the operator should wait for the vapor level to return to normal and then should cautiously operate the spray wand only below the vapor level.

A massive work load will displace a large quantity of solvent vapor. The work load should not be so massive that the vapor level drops more than about 10 cm (4 inches)[5] as the work load is removed from the vapor zone. Otherwise, excessive quantities of solvent vapors will mix with the air as the vapor level falls and rises.

The water separator should be kept properly functioning so that water does not return to the surface of the boiling solvent sump. Water can combine with the solvent to form an azeotrope, a constant boiling mixture of solvent and water that has a lower vapor density and higher volatility than does pure solvent vapor.[6]

Lastly, it is important for any leaks to be repaired properly and promptly. Special attention should be paid to leaks of hot solvent because hot solvent evaporates quickly. These leaks may be greater than they appear or go completely unnoticed.

Carry-Out Emissions - Carry-out emissions are the liquid and vaporous solvent entrained on the clean parts as they are taken out of the degreaser. Crevices

and cupped portions of the cleaned parts may contain trapped liquids or vapors even after the parts appear to be dried. Also, as the hot cleaned part is withdrawn from the vapor zone, it drags up solvent vapors and heats solvent-laden air causing it to convect upwards out of the degreaser.

There are seven factors which directly effect the rate of carry-out emissions:

a. Porosity or absorbency of work loads,

b. Size of work loads in relation to the degreaser's vapor area,

c. Racking parts for drainage,

d. Hoist or conveyor speed,

e. Cleaning time in the vapor zone,

f. Solvent trapped in cleaned parts,

g. Drying time.

Porous or absorbent materials such as cloth, leather, wood or rope will absorb and trap condensed solvent. Such materials should never enter a vapor zone.

The work load preferably should not occupy more than one-half of the degreaser's working area.[7] Otherwise, vapors will be pushed out of the vapor zone by means of a piston effect.

Proper racking of parts is necessary to minimize entrainment (cupping) of solvent. For example, parts should be positioned vertically with cups or crevices facing downward.

A maximum hoist speed of 3.3 meters per minute (11 feet per minute) has been generally accepted as reasonable by the degreasing industry.[8] Rushing work loads into and out of the degreaser will force solvent vapors out into the air and leave liquid solvent on the cleaned parts which can subsequently evaporate into the air.

Cleaning time is the period the work load remains in the vapor zone. If this is not long enough to allow the work load to reach the temperature of the condensing vapor, the parts will not dry properly when removed from the vapor zone. The work load should remain in the vapor zone until the vapors no longer condense on the parts.[9] Usually 30 seconds is sufficient; however, massive work loads may require longer periods.[10]

Before the cleaned parts emerge from the vapor zone, they should be tipped and/or rotated to pour out any collected liquid solvent. The work load should be removed from the vapor zone slowly (at a vertical speed not to exceed 11 feet per minute).[11]

Drying time is critical. It should be long enough to allow the solvent to vaporize from the clean part but not significantly longer. When a hot dried part rests just above the vapor level, it causes solvent-laden air to heat up and rise. Typically a work load can dry in 15 seconds.[12]

Waste Solvent Evaporation - Solvent emissions may also result from disposing of waste solvent sludge in ways where the solvent can evaporate into the atmosphere. The volume of waste solvent in sludge from vapor degreasers is much less than that from cold cleaners for equivalent work loads for two reasons. First, the solvent in the vapor degreaser sump can be allowed to become much more contaminated than the solvent used in a cold cleaner because the contaminants, with high boiling points, stay in the sump rather than vaporize into the vapor zone. Second, vapor degreasing solvents are halogenated and as such are generally more expensive; thus, they are more often distilled and recycled than cold cleaning solvents.

Although the waste solvent evaporation from vapor degreaser sludge is usually less than the diffusion and carry-out losses, it still contributes about 5 to 20 percent of the degreaser's total solvent emissions.[13] When

the solvent in the sump accumulates too much oil and other contaminants problems can occur. The most serious is coating of the heater surfaces, leading to overheating and subsequent chemical degradation of the solvent. Thus, the solvent sludge must be cleaned out of the degreaser periodically and replaced with fresh solvent.

There are four practices that can reduce and nearly eliminate the atmospheric evaporation from waste solvent disposal:

a. Boil-down,

b. Use of in-house distillation,

c. Use of contract reclamation services,

d. Transfer to acceptable disposal facilities.

Boil-down is a technique of distilling pure solvent from the contaminated mixture in the degreaser. As the contaminated solvent is boiled in the sump pure solvent vaporizes and condenses on the cooling coils where it is routed to and stored in a holding tank. Boil-down can usually reduce the solvent content in the contaminated material to less than 40 to 45 percent by volume. When production schedules permit further boil-down time, considerably lower levels can be achieved.[14]

In-house distillation can be an efficient and often profitable method of treating waste solvent. Distilled solvents can normally be reused although additional stabilizers must be added sometimes. Distillation systems vary from centralized centers to relatively small external stills for one or more vapor degreasers. Through distillation, the solvent content of the waste solvent sludge can be reduced to about 20 percent by weight (12-15 percent by volume) in most operations.[15] Additional steam stripping can reduce this further.

Presently most vapor degreaser operators do not use in-house distillation

but transfer their waste solvent to another system or company. Even if the waste solvent is distilled, there are oils and contaminants, called still bottoms, that require disposal. The preferable disposal methods, for minimizing solvent evaporation into the atmosphere, are distillation plants and special incineration plants. Disposal in landfills after evaporation is also used but is less desirable. Waste solvent disposal is discussed in greater detail in Section 3.1.4.

Exhaust Emissions - Exhaust systems are often used on larger than average open top vapor degreasers. These systems are called lip or lateral exhausts and they draw in solvent-laden air around the top perimeter of the degreaser. Although a collector of emissions, an exhaust system can actually increase evaporation from the bath, particularly if the exhaust rate is excessive. Some exhaust systems include carbon adsorbers to collect the exhaust solvent for reuse; thus, exhaust emissions can be nearly eliminated if the adsorption system functions properly.

In some poorly designed exhaust systems, the ventilation rate can be too high. If the air/vapor interface is disrupted by high ventilation rates, more solvent vapors will mix with air and be carried out by the exhaust system. A rule of thumb used by manufacturers of degreaser equipment and control systems is to set the exhaust rate at 50 cubic feet per minute per square foot of degreaser opening (15 m^3 per minute $\cdot$ m^2).[16]

The primary objective of exhausting is to assure that the threshold limit value (TLV) as adopted by OSHA is not exceeded. The exhaust level recommended above is satisfactory for OSHA requirements on ventilation except when the qual of operation of the degreaser is rated as "average" or "poor." Poor operation noted by OSHA to include excess carry-out of the vapor and liquid solvent, contamination of the solvent, or improper heat balance. In these cases, and

for solvents with a TLV $\leq$ 100 ppm, the minimum OSHA ventilation requirement is 75 or 100 cubic feet per minute per square foot of degreaser opening. Consequently, atmospheric emissions from poorly operated degreasers are increased even further.

2.2.3 Conveyorized Degreasing

There are several types of conveyorized degreasers, operating both with cold and vaporized solvents. An average conveyorized degreaser emits about 25 metric tons per year of solvent; however, because of their limited numbers they contribute only about 15 percent of the total solvent degreasing emissions. Because of their large work capacity conveyorized degreasers actually emit less solvent per part cleaned than either open top vapor degreasers or cold cleaners. Controls discussed in Chapter 3 can reduce this amount still further.

2.2.3.1 Design and Operation -

In conveyorized equipment, most, and sometimes all, of the manual parts handling associated with open top vapor degreasing has been eliminated. Conveyorized degreasers are nearly always hooded or covered. The enclosure of a degreaser diminishes solvent losses from the system as the result of air movement within the plant. Conveyorized degreasers are used by a broad spectrum of metalworking industries but are most often found in plants where there is enough production to provide a constant stream of products to be degreased.

There are seven main types of conveyorized degreasers: monorail, cross-rod, vibra, ferris wheel, belt, strip, and circuit board cleaners. While most of the seven types of conveyorized degreasers may be used with cold or vaporized solvent, the first four are almost always vapor degreasers.

The cross-rod degreaser (Figure 2-10)obtains its name from the rods between the two power driven chains from which parts are supported as they are conveyed through the equipment. The parts are contained in pendant baskets or, where tumbling of the parts is desired, perforated cylinders. These cylinders are rotated by a rack and pinion design within the solvent and/or the vapor zone. This type of equipment lends itself particularly well to handling small parts which need to be immersed in solvent to obtain satisfactory cleaning or requires tumbling to provide solvent drainage from cavities in the parts.

A monorail vapor degreaser (Figure 2-11) is usually chosen when the parts to be cleaned are being transported between manufacturing operations using a monorail conveyor. This design lends itself to automatic cleaning with solvent spray and vapor. The parts can be moved in one side and out the other, as illustrated, or they can turn 180^{0} while in the vapor or spray portions of the equipment and exit the equipment through a tunnel parallel to the entrance.

In a vibra degreaser (Figure 2-12) dirty parts are fed through a chute which directs them into a pan flooded with solvent. The pan is connected to a spiral elevator. The pan and spiral elevator are vibrated, causing the parts to move from the pan up the spiral to the exit chute. The parts condense solvent vapor as they are vibrated up the spiral and dry as soon as they leave the vapor zone. These degreasers are capable of processing quantities of small parts. Since the vibratory action creates considerable noise, acoustical insulation of the equipment is needed or the system must be enclosed in a noise-control booth.

Three other typical units are the ferris wheel, belt, and strip degreasers. The ferris wheel degreaser (Figure 2-13) is one of the least expensive and

Figure 2-10
CROSS-ROD CONVEYORIZED DEGREASER

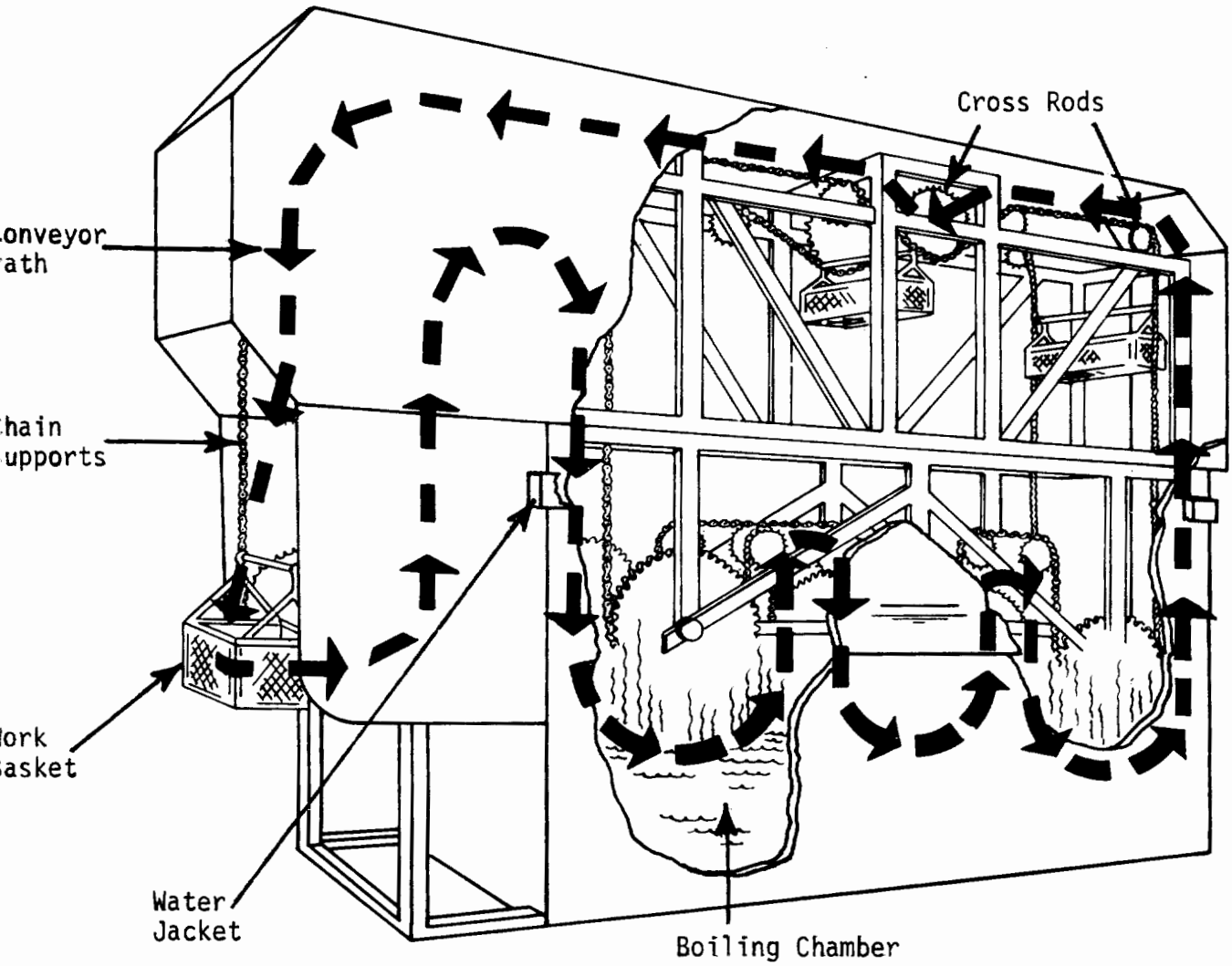

Figure 2-11
MONORAIL CONVEYORIZED DEGREASER

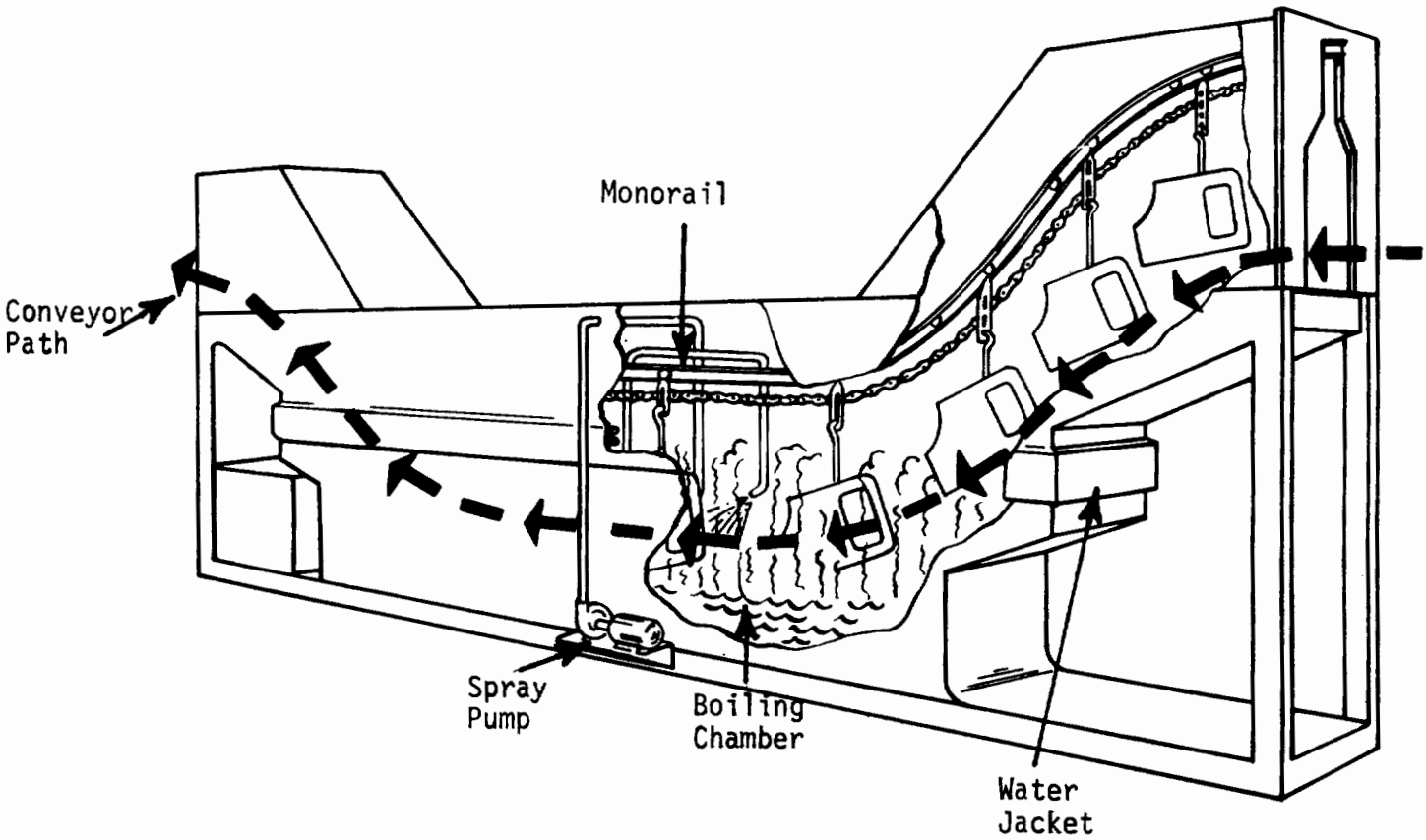

Figure 2-12

VIBRA DEGREASER

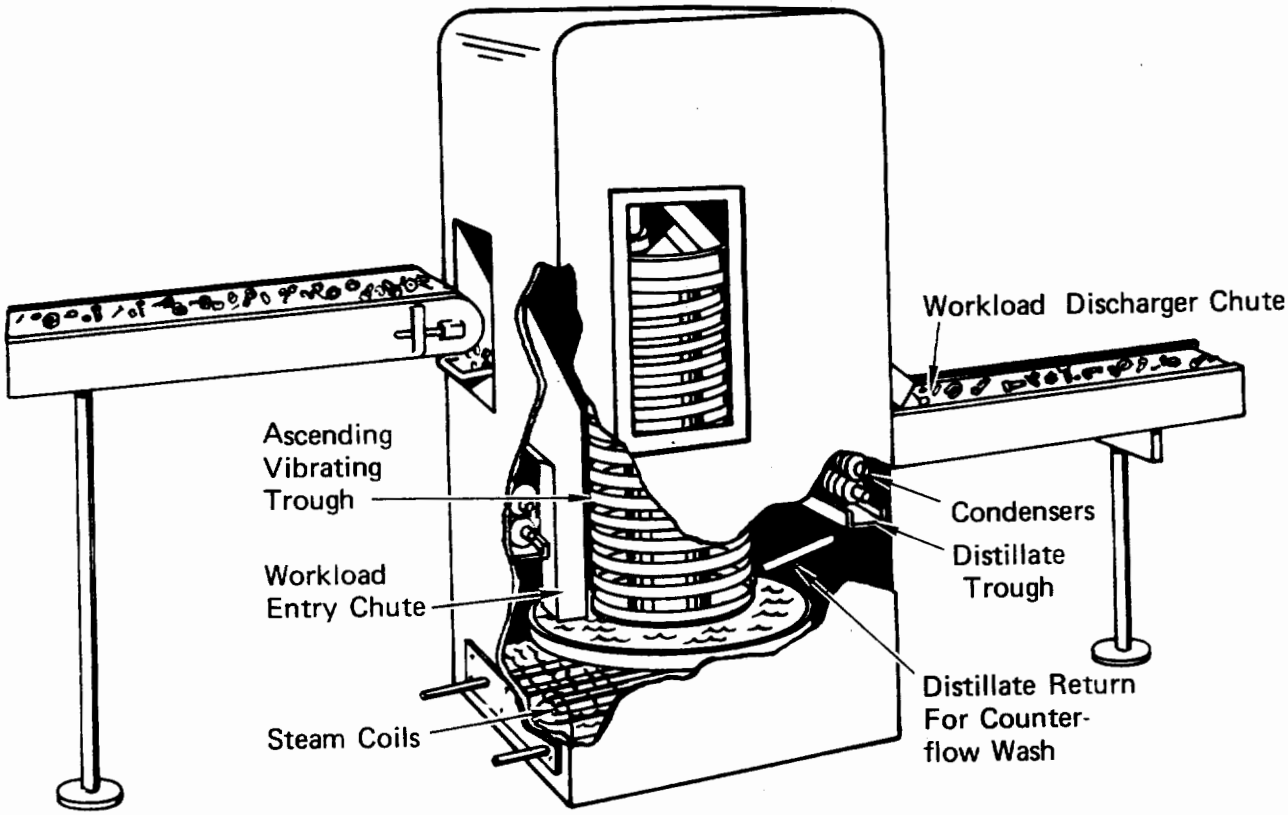

Figure 2-13
FERRIS WHEEL DEGREASER

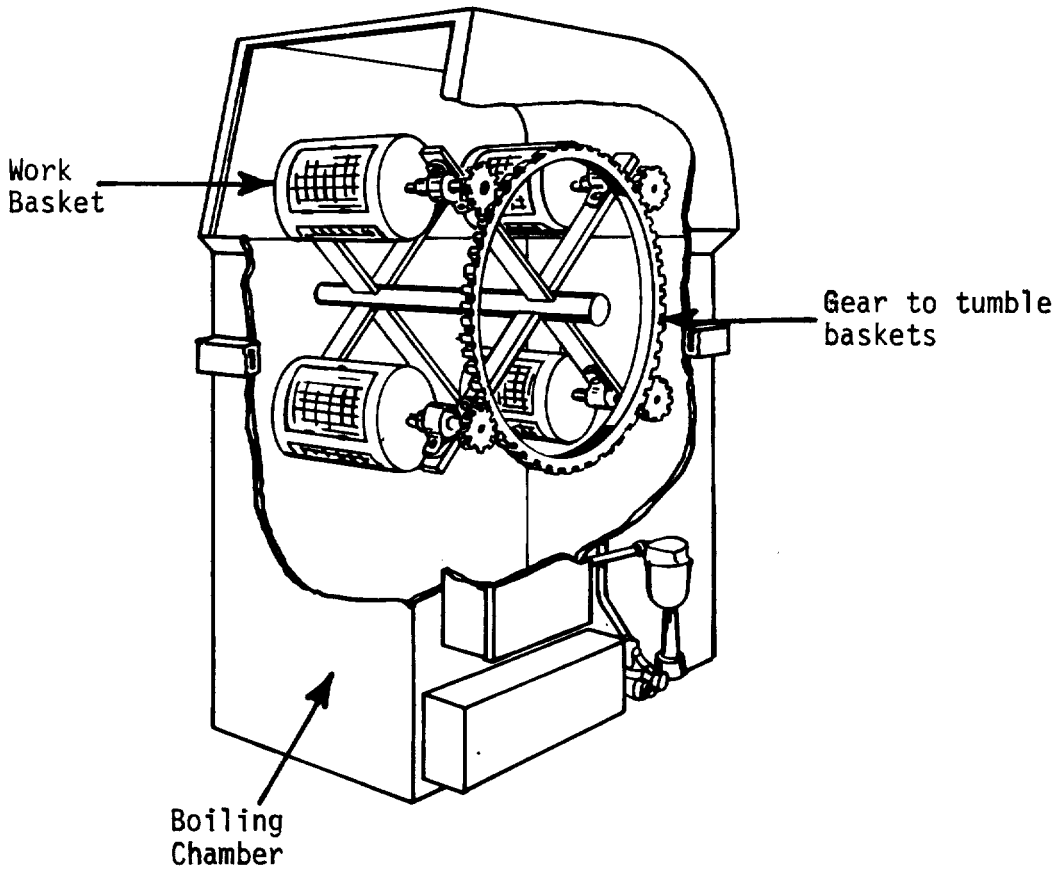

smallest conveyorized degreasers. It generally uses perforated baskets, as does the cross-rod degreaser. The belt degreaser is designed to enable simple and rapid loading and unloading of parts (see Figure 2-14). A strip degreaser resembles a belt degreaser, except that the strip itself is being cleaned. The strip degreaser is an integral step in the fabrication and coating of some sheet metal products.

Circuit board cleaners are conveyorized degreasers which use one of the previously described designs specifically in the production of printed circuit boards. There are three types of circuit board cleaners: developers, strippers, and defluxers. In the production of circuit boards, ultraviolet rays are projected through a film of an electrical circuit pattern to create an image on a copper sheet covered with resist. The developer degreaser dissolves off the unexposed resist. This copper covered board is then dipped in an acid bath to etch away the copper that is not covered by the hard, developed resist. Next, the stripper degreaser dissolves off the developed resist. Then a wave of solder passes over the bare copper circuit and bonds to it. Lastly, the defluxer degreaser dissolves off the flux left after the solder hardens. Because of the nature of the materials being cleaned, circuit board cleaners can use cold (room temperature) solvents, as well as vapor degreasing processes.

2.2.3.2 Emissions -

About 85 percent of the conveyorized degreasers are vapor types, leaving 15 percent as conveyorized non-boiling degreasers. Circuit board cleaners represent most of the non-boiling conveyorized degreasers.[17] An average emission rate from a conveyorized vapor degreaser is about 25 metric tons per year, while that for non-boiling conveyorized degreasers is almost 50 metric tons per year. However, most new designs for non-boiling conveyorized

Figure 2-14
MESH BELT CONVEYORIZED DEGREASER

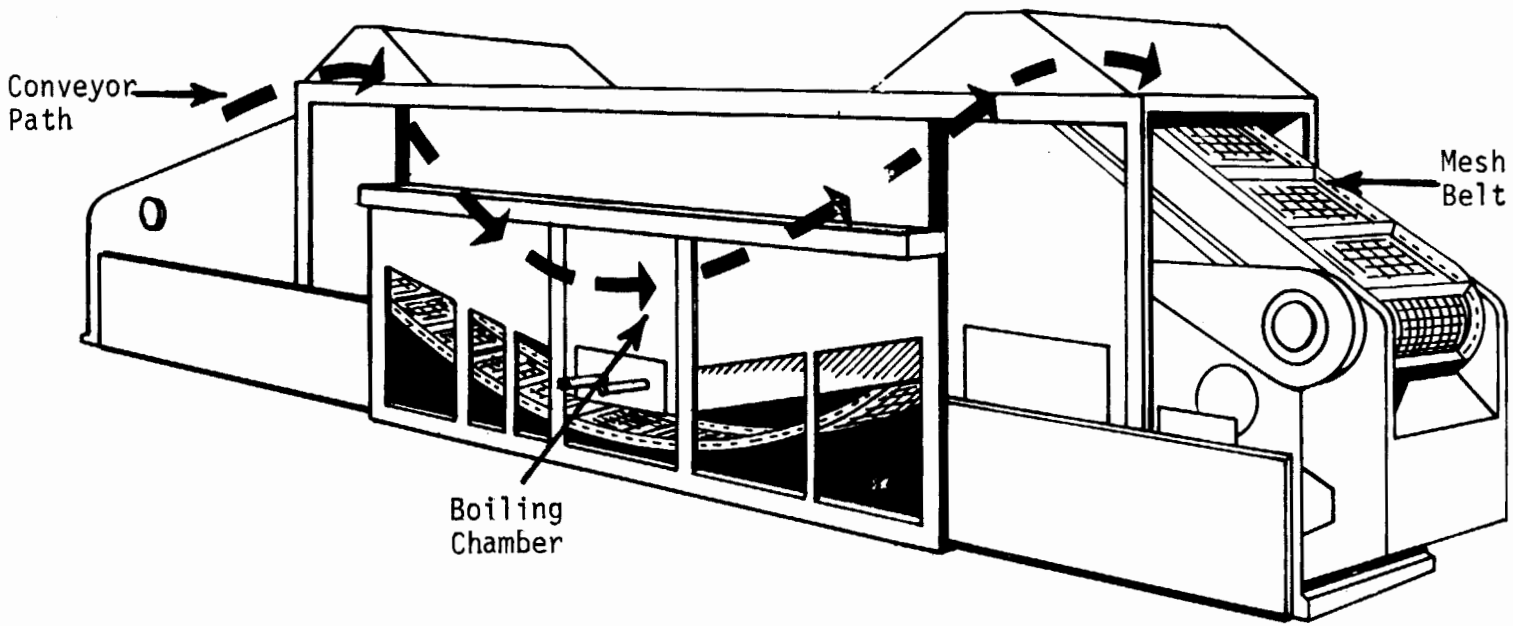

degreasers are far more efficient than the older designs.[18] It is estimated that the vapor types presently contribute about 75 percent of the conveyorized degreaser emissions nationally and the non-boiling types contribute the remaining 25 percent. On the national scale, about 75,000 metric tons/year are emitted from conveyorized vapor degreasers, and about 25,000 metric tons/year are from conveyorized non-boiling degreasers (see Appendix B.4). The major types of emissions from conveyorized degreasers are depicted in Figure 2-15.

Bath Evaporation - For an equivalent work load, the diffusion and convection of solvent vapors from the solvent bath are considerably less for conveyorized degreasers than for open top degreasers. This is because the conveyorized degreasers are normally enclosed except for a relatively small entrance and exit.

Because conveyorized degreasers are generally automated, operating practice is a minor factor while design and adjustment are major factors affecting emissions. Proper adjustment of the degreasing system primarily affects bath evaporation and exhaust emissions, while operation and degreaser design affect carry-out and waste solvent evaporation.

The main adjustment affecting the bath evaporation rate is the heating and cooling balance. Basically, the cooling supplied by the primary condensing coils should be sufficient to condense all the vaporized solvent. Also, the heating rate needs to be large enough to prevent the vapor level from dropping as cold parts enter the vapor zone.

With regard to equipment design, bath evaporation can be reduced by minimizing the entrance and exit areas and by regulating the spray system.[19] Naturally the smaller the area of opening, the lower the loss of solvent vapors. Partial covers can be placed over the openings which silhouette the parts to be cleaned yet give enough margin for safe passage. Sprays should be designed or adjusted so that they do not cause turbulence at the air/vapor interface. Spray pressure should the minimum necessary for proper performance

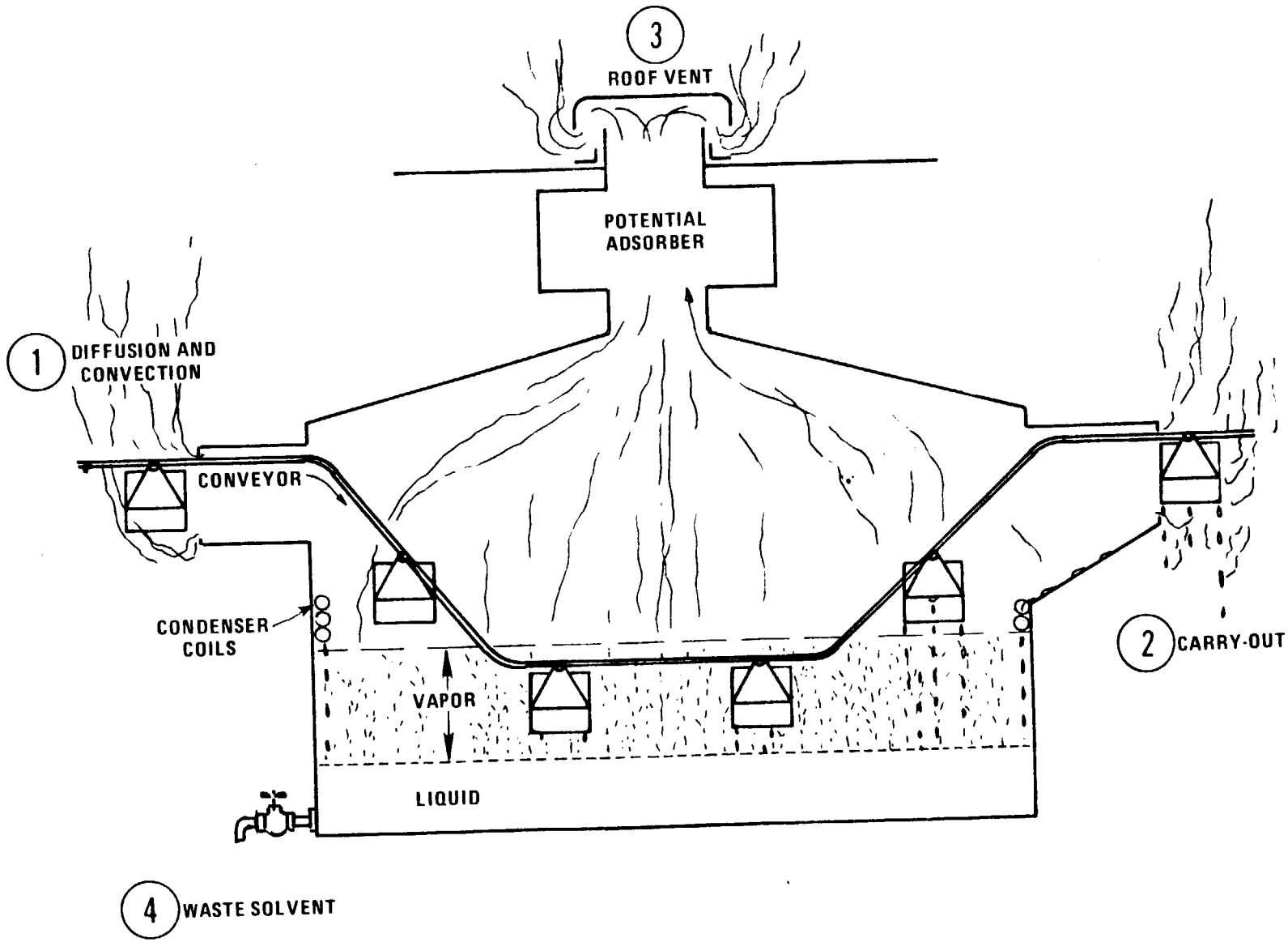

Figure 2-15. CONVEYORIZED DEGREASER EMISSION POINTS

One well designed system uses the high pressure spray in a contained and partially submerged chamber.

Poor operation can increase convective losses from the solvent bath. For instance, if work baskets are overloaded the vapor zone may collapse increasing air vapor mixing and, thus, emissions. This can be avoided by following the manufacturer's specification for allowable work load in tons per hour, which is determined through an energy balance of the system. The heating capacity of the solvent boiler must be greater than the heat loss due to solvent condensation on the work load. Evaporative losses from the bath also increase when there is delay in solvent leak repair.

Carry-Out Emissions - Carry out of vapor and liquid solvent is usually the major emission from conveyorized degreasers. It is difficult to reduce carry-out emissions, because the amount of work load is inherently large.

Two factors affecting carry-out emissions are the drainage of cleaned parts and their drying time. Parts drainage is improved by proper racking, as was discussed for open top vapor degreasing. Racking is especially critical in conveyorized degreasers, because there is little an operator can do to reduce carry-out from a poorly designed system. The degreaser design should allow sufficient space and time for the cleaned parts to dry completely. Some designs include a shroud extending from the exit to form a drying tunnel. Again the conveyor speed should not exceed 3.3 meters per minute (11 feet per minute) vertical rise.[20]

Exhaust Emissions - In some cases the emissions can be high because of an excessive ventilation rate. As with open top vapor degreasers the ventilation rate should not be much greater than 15 $m^3/min \cdot m^2$ (50 cfm/ft^2) of air/solvent interface.[21]

Waste Solvent Evaporation - Evaporation from waste solvent disposal is the smallest emission from conveyorized degreasers. Most conveyorized degreasers are designed to distill their own solvent. An external still is attached to the conveyorized degreaser so that used solvent can be constantly pumped out, distilled and returned. Thus, the wastes will usually consist only of still bottoms. Still, because of the high volume, waste solvent emissions from conveyorized degreasers are significant, typically equalling 10 to 20 percent of the total emissions from a conveyorized degreaser.[22]

As was discussed earlier, the method of disposal of the still bottoms or undistilled waste solvent will determine the amount of solvent that evaporates into the atmosphere.

REFERENCES

1. T. J. Kearney, "Reply to J. C. Bollinger letter of September 3, 1976," letter of October 1976.
2. American Society for Testing and Materials (ASTM), Committee D-26, "Recommended Practice for New Source Performance Standards to Control Solvent Metal Cleaning Emissions."
3. Surprenant, K. S. and Richards, D. W. of Dow Chemical Company, "Study to Support New Source Performance Standards for Solvent Metal Cleaning Operations," Volume 2, Appendix C-12, prepared for Emission Standards and Engineering Division (ESED), under Contract # 68-02-1329, Task Order #9, June 30, 1976.
4. Information provided by K. S. Surprenant by telephone to J. C. Bollinger EPA, March 3, 1977.
5. Dow Chemical Company, "Modern Vapor Degreasing," operating manual, Form # 100-5185-72.
6. ASTM, D-26., "Handbook of Vapor Degreasing," ASTM Special Technical Publication 310 A, Philadelphia, April, 1976.
7. Detrex Chemical Ind., Inc., Detroit, "Todays' Concepts of Solvent Degreasing," operating manual.
8. ASTM, D-26, Op. Cit.
9. Ibid.
10. Surprenant, Op. Cit.
11. American Society for Testing and Materials Op. Cit.
12. Surprenant, Op. Cit.
13. "Trip Report - Meeting of ASTM Committee D-26 on Halogenated Organic Solvents, Gatlinburg, Tenn.", EPA memorandum from J. L. Shumaker to D. R. Patrick, June 30, 1977.

3.0 EMISSION CONTROL TECHNOLOGY

This chapter describes individual emission control devices applicable to solvent degreasers, and then shows how these can be combined to form complete control systems. Estimates are also provided of the control efficiency (i.e., percent emission reduction) of individual control devices along with a range of control efficiency for the complete control systems.

It is important to keep in mind that optimum control systems will not be equivalent for each degreaser design or even each application of a particular design. All of the major devices discribed in this chapter will yield optimum control in certain instances; however, because degreaser designs and applications vary, one or more of these devices could be completely unsuitable for a given degreaser. Processes must be evaluated individually to determine the optimum control system. The individuality of systems is such that control efficiencies estimated in this chapter are not directly comparable and should not be used to rate one device against another. They are given only as general levels of control which one could expect from appropriately applied technology.

3.1 EMISSION CONTROL DEVICES

3.1.1 Solvent Bath Emissions

There are five main devices that can reduce emissions from the solvent bath:

1. Improved cover,
2. High freeboard,

14. Information provided by Detrex Chemical Industries, Inc., Letter from L. Schlossberg to J. L. Shumaker, June 28, 1977.

15. Surprenant, Op. Cit.

16. ASTM, D-26, Op. Cit.

17. Bollinger, J. C., "Maximum Impact of NSPS on 1985 National Degreasing Emissions," December, 1975.

18. Information provided by Bob Porter of Hollis Engineering Company, Nashua, N. H. by telephone to J. C. Bollinger, EPA, March 28, 1977.

19. American Society, Op. Cit.

20. ASTM, D-26, Op. Cit.

21. Information, K. S. Surprenant, Op. Cit.

22. Ibid.

halogenated solvent. The water cover cannot be used in many applications, however because the water may corrode the metal surface of the cleaned parts or may cause chemical degradation of halogenated solvent.

Covers on cold cleaners which use flammable solvents generally have a fusible link in the support arm. This link is designed to open if the solvent catches fire, thus allowing the cover to close and smother the flames. Unfortunately, some designs require disassembly of the mechanism for normal closing of the cover. These designs cause unnecessary emissions and should be avoided.

Not all cold cleaner designs include a soaking feature. Some of the smaller maintenance units are designed with an enclosed sump from which solvent is pumped to a sink for cleaning parts. The sink drains back to the sump, minimizing the time during which solvent can evaporate. Although the solvent is contained, these units generally include a cover on the sink as a fire prevention feature. It is doubtful that closing this cover can effect a significant additional emission reduction.

Even though conveyorized degreasers are basically covered by design, additional cover related control can be achieved by minimizing the openings and covering the openings during shutdown hours. ASTM has recommended that there not be more than 6 inches (15 cm) clearance between the parts on the conveyor and the sides of the opening.[1] This clearance can be specifically defined as the average distance between the edge of the openings and the part, and termed the "average silhouette clearance." Average silhouette clearance can be appreciably less than 6 inches (15 cm) for parts that are not unusually large. EPA recommends an average silhouette clearance of 4 inches (10 cm) or 10 percent of the opening's width.

3. Refrigerated chillers,

4. Carbon adsorption,

5. Safety switches.

3.1.1.1 Improved Cover -

The cover is the single most important control device for open top vapor degreasers. Although covers are normally provided on open top degreasers as standard equipment, they can usually be made more easy to use, and hence more frequently used, if they are mechanically assisted, powered or automated.

For vapor degreasers the cover should open and close in a horizontal motion, so that the air/vapor interface disturbance is minimized. These types of covers include roll type plastic covers, canvas curtains and guillotine covers. It is usually advantageous on larger open top vapor degreasers to power the cover. This may be done pneumatically or electrically, usually by manual control with an automatic cut off. The most advanced covering systems are automated in coordination with the hoist or conveyor. The cover can be designed so it will close while the parts are being cleaned and dried. Thus, the cover would only be opened for a short period of time when the parts are actually entering or exiting the degreaser. This is further described in Section 3.1.3.1.

On cold cleaners, covers are frequently mechanically assisted by means of spring loading or counterweighing. A pedal operated or powered system can make the cover even more convenient to use. For specific applications, two additional types of covers can be used; these are the submerged cover and the water cover. The submerged cover (commercially termed "turbulence baffle") is a horizontal sheet of material submerged about two inches below the surface of the liquid solvent that is vigorously pump agitated. The water cover is simply a layer of water about two to four inches thick over a

The effectiveness of a down-time cover on conveyorized degreasers should be significant, although it is difficult to quantify. One test found that about 18 percent of the total emissions was due to evaporation during down-time.[4] It is expected that most of this loss could be eliminated by a down-time cover.

3.1.1.2 High Freeboard -

The freeboard primarily serves to reduce drafts near the air/solvent interface. An acceptable freeboard height is usually determined by the freeboard ratio, the freeboard height divided by the width (not length) of the degreaser's air/solvent area.

Normally the freeboard ratio is 0.5-0.6 for the open top vapor degreasers, except for very volatile solvents, such as methylene chloride or fluorocarbon solvents, where a minimum freeboard ratio of 0.75 is used. In fact, the American Society for Testing and Materials has recommended that a minimum freeboard ratio of 0.75 be an alternative control for open top degreasers using all solvents.[5]

For an open top vapor degreaser that is idling (has no work load), the emission reduction from raising a freeboard ratio from 0.5 to 0.75 may typically be 25-30 percent. In fact, an increase in ratio from 0.5 to 1.0 may yield about a 50 percent reduction in emissions. These are EPA estimates based on a test by Dow Chemical.[6] The total emission reduction due to the freeboard will generally be less for open top vapor degreasers under normal work load, because the freeboard is less effective in reducing the carry-out emissions than solvent bath emissions.

The freeboard height seems to have little effect on cold cleaners using solvents with low volatilities, such as mineral spirits, but provides significant benefits for cold cleaners using higher volatility solvents, such as the halogenated ones. OSHA requires at least a 6 inch (15 cm) freeboard for cold cleaners.[7]

Covers can be easily made for the entrance and exit to the conveyorized degreaser so that they can be closed immediately after shutting down the degreaser. These covers can be made of any material that impedes drafts into the degreaser and should cover at least 80 to 90 percent of the opening. Closing these covers is most important during the hours immediately after shutdown, because the hot solvent is cooling and evaporation continues. Even after the solvent sump has cooled, the down-time cover may be significantly effective for more volatile vapor degreasing solvents.

A cover on an open top vapor degreaser has been shown to reduce total emissions by approximately 20-40 percent depending upon the frequency of its use.[2]

It is impossible to estimate a single control efficiency for the cold cleaning cover, because the emission reduction varies too greatly with respect to the solvent volatility, draft velocity, freeboard ratio, operating temperature and agitation. However, it can be estimated that bath evaporation rate varies directly with the solvent volatility at operating temperature. Although a closed cover can nearly eliminate the bath evaporation, the cover can do nothing to reduce the carry-out or waste solvent emissions. Thus, a normally closed cover becomes effective only when bath evaporation accounts for an appreciable portion of the total emission. More specifically, when solvent volatility is moderate to high (approximately > 0.3 psi at 100°F (2.1 kPa at 38°C)), it is significantly effective to close the cover at all times when parts are not being cleaned manually in the cold cleaner. It is especially important that the cover be closed when the bath is agitated or heated. If none of these conditions apply, then the cover should at least be closed during long periods of cold cleaner disuse, such as during shutdown hours and idle periods > 1/2 hour.[3]

Figure 3-1
REFRIGERATED FREEBOARD CHILLER

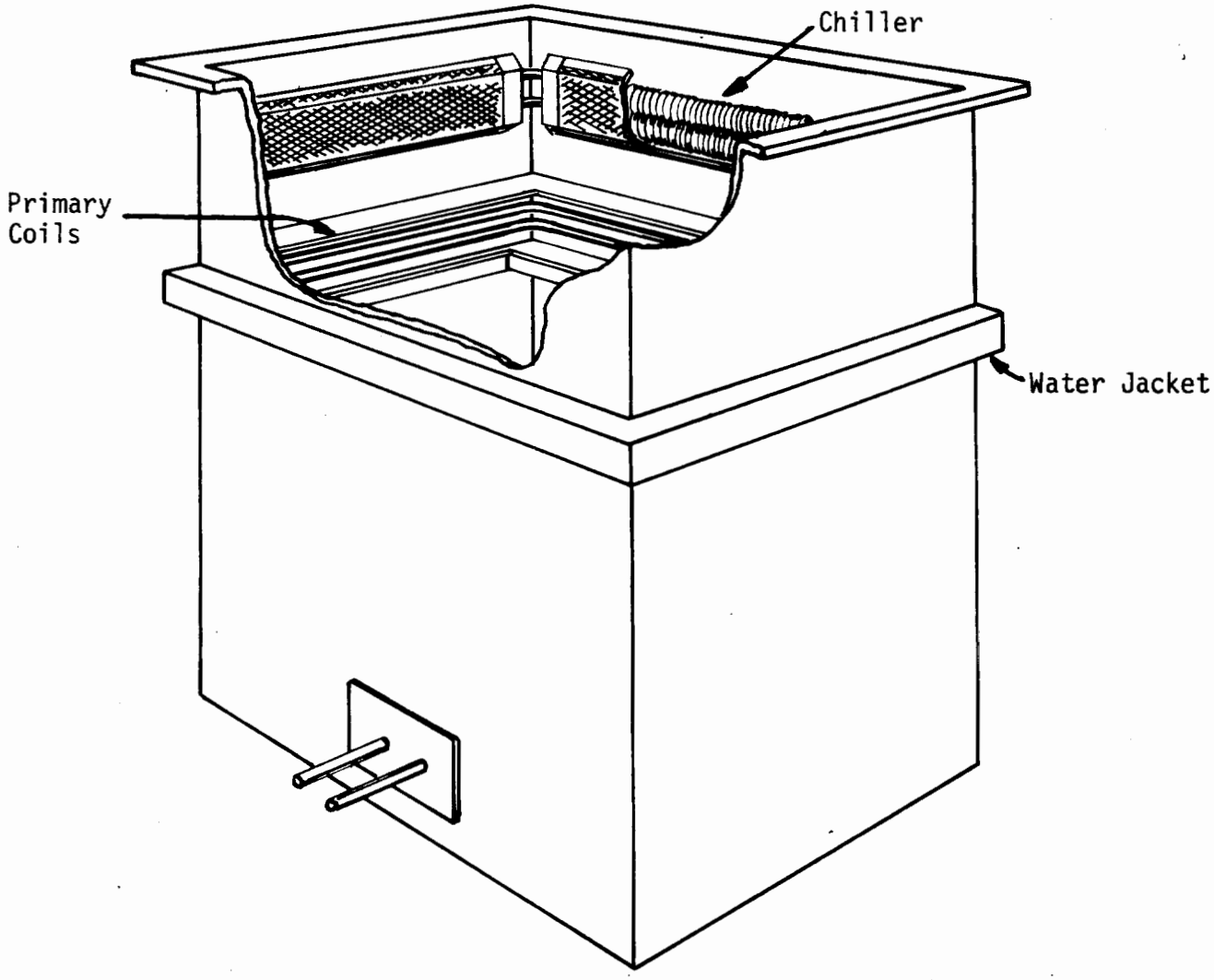

3.1.1.3 Refrigerated Chillers -

The vapors created within a vapor degreaser are prevented from overflowing the equipment by means of condenser coils and a freeboard water jacket. Refrigerated freeboard chillers add to this basic system a second set of condenser coils located slightly above the primary condenser coils of the degreaser (see Figure 3-1). Functionally, the primary condenser coils control the upper limit of the vapor zone. The refrigerated freeboard chilling coils on the other hand impede the diffusion of solvent vapors from the vapor zone into the work atmosphere by chilling the air immediately above the vapor zone and creating a cold air blanket. The cold air blanket results in a sharper temperature gradient. This reduces the mixing of air and solvent vapors by narrowing the air/vapor mixing zone. Finally, the chilling produces a stable inversion layer which decreases the upward convection of solvent laden air.

Freeboard chillers operate with refrigerant temperatures in the range of -30 to 5°C. Although there is a patent* on units which operate below 0°C, most major manufacturers of vapor degreasing equipment offer both above and below freezing freeboard chillers.

The recommended operating temperature for below freezing chillers is -30 to -25°C. Because of these low temperatures, designs must include a timed defrost cycle to remove the ice from the coils and restore the heat exchange efficiency. Although the liquid water formed during the defrost cycle is directed to the water separator, some water contamination of the vapor degreasing solvents is not uncommon. Water contamination of vapor degreasing solvents can have an adverse effect on water soluble stabilizer systems, although major stabilizer depletions from this are rare. Water, however, contributes to equipment corrosion and can diminish the working life of the equipment significantly.

*US Patent 3,375,177 issued to AutoSonics Inc., March 26, 1968,

energy consumption may be too great when used on larger open top vapor degreasers. The refrigerated condenser coil offers portability of the open top vapor degreaser by excluding the need for plumbing to cool condenser coils with tap water.

Tests have been performed for EPA on three below freezing refrigerated freeboard chillers. Emission reductions of 16, 43, and 62 percent were measured.[10] The chiller which achieved only a 16 percent reduction in emissions was installed around 1968 and the design was not representative of present designs. This degreaser also had a low "uncontrolled" emission rate of 0.14 lb/hr ft^2, partly due to the use of a cover. The units which achieved 43 and 62 percent reduction in emissions are thought to be more representative of present designs.

EPA has not performed tests on above freezing freeboard chillers or refrigerated condensing coils. However, tests are planned which should help quantify the effectiveness of these controls.

Chillers are not normally used on cold cleaners. While it is certain that a chiller would reduce emissions, especially from units using the more volatile solvents, this control is generally too expensive for a normal cold cleaner. A chiller on a cold cleaner should have about the same effectiveness as a normally closed cover, but it would cost considerably more. In fact, a chiller could well cost more than the cold cleaner itself. Still, some manufacturing cold cleaners with unusually high emission rates could find a chiller appropriate.

3.1.1.4 Carbon Adsorption -

Carbon adsorption systems are widely used to capture solvent emissions from metal cleaning operations. On appropriate degreasing processes, these devices can achieve high levels of emission control. Equipment design and operation (as illustrated in Figures 3-2, 3-3, and 3-4) are fairly well

Refrigerated freeboard chillers are normally sized by specifying the cooling capacity per length of perimeter. The above freezing refrigerated freeboard chiller is normally designed to achieve a minimum of 500 Btu/hr (865 W/m·°K) cooling capacity per foot of air/vapor interface perimeter, while the below freezing refrigerated freeboard chiller is normally designed to the following specifications:

Degreaser Width	Minimum Cooling Capacity (Btu/hr ft of perimeter)
< 3.5 ft. (1.1 m)	200
> 3.5 ft. (1.1 m)	300
> 6 ft. (1.8 m)	400
> 8 ft. (2.4 m)	500
> 10 ft. (3.0 m)	600

Normally each pass of finned cooling coil is expected to remove 100 Btu/hr ft (173 W/m·°K).[8] The previous specifications are typical design standards used by manufacturers of chillers. EPA test data indicate that these design standards will provide satisfactory emission control, but at present data are insufficient to confirm that they yield optimum emission control.

In addition to these, a third type of refrigerated chiller, known as the refrigerated condenser coil, is available. Refrigerated condenser coils do not provide an extra set of chilling coils as the freeboard chillers do, but replace the primary condenser coils. If the coolant in the condenser coils is refrigerated enough, it will create a layer of cold air above the air/vapor interface. DuPont and Rucker Ultrasonics have recommended that the cooling rate of refrigerated condenser coils be equal to 100-120 percent of the heat input rate in the boiling sump, in order to give optimum emission control.[9] The refrigerated condenser coils are normally used only on small open top vapor degreasers (especially with fluorocarbon solvent), because

Figure 3-2. CARBON ADSORBER

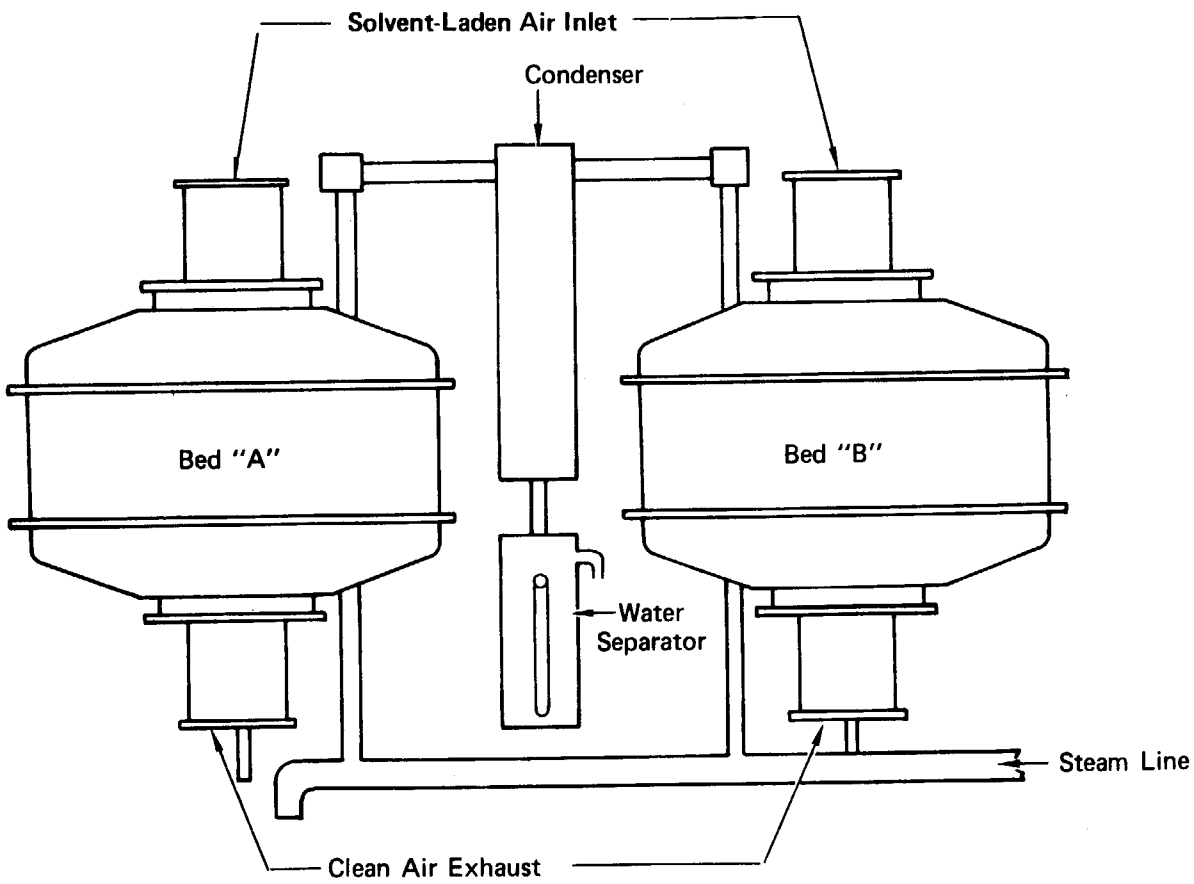

Figure 3-3
ADSORPTION CYCLE

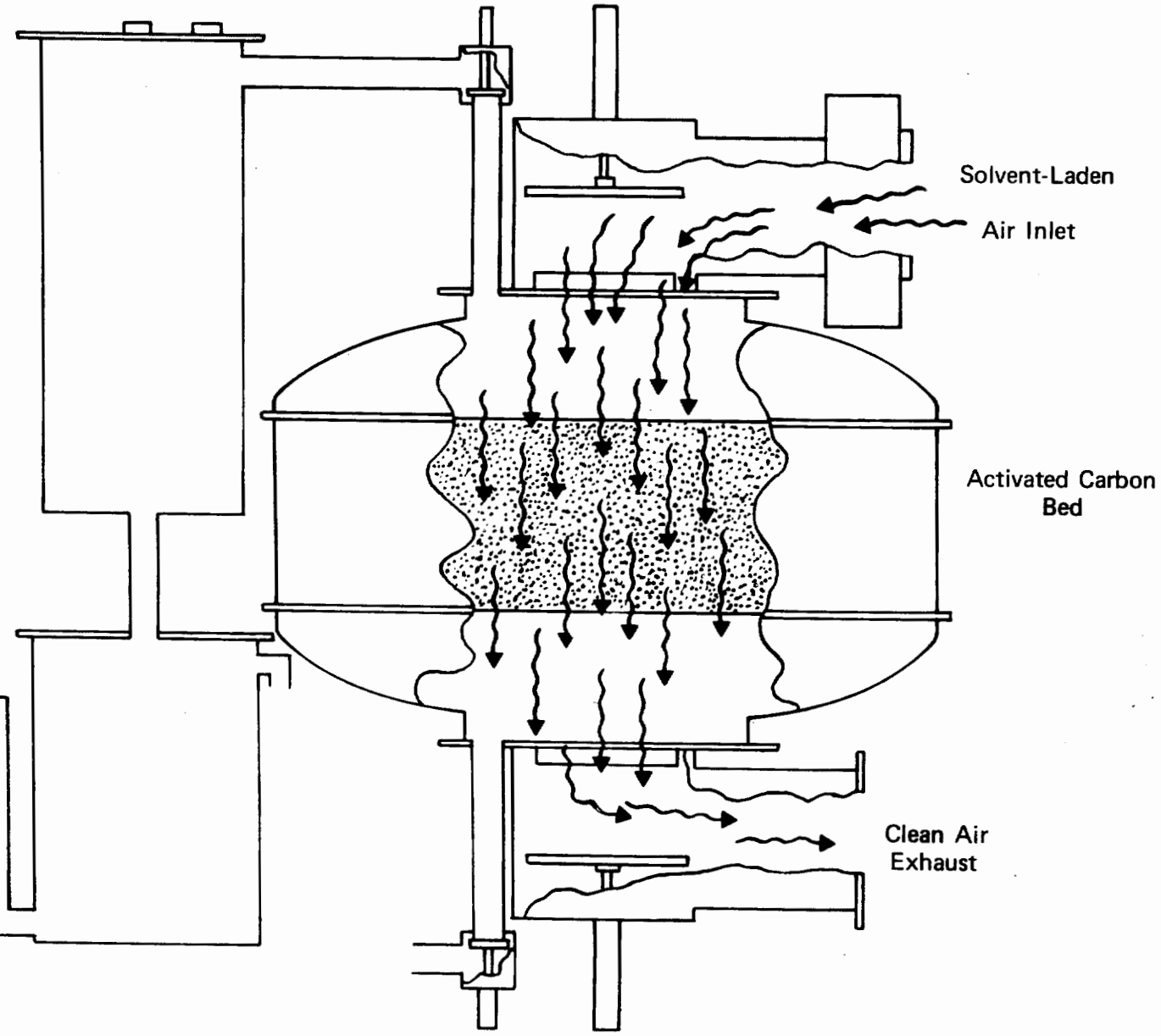

standardized and described in detail in general literature, in the Dow Report[11] and in the report by JACA Corporation.[12]

A well designed and maintained carbon adsorption system will normally capture in excess of 95 percent of the organic input to the bed. Carbon adsorption systems for solvent metal cleaning normally will achieve about 40-65 percent reduction of the total solvent emission.[13] One reason for the difference between the theoretical and actual is that the ventilation apparatus of the control system cannot capture all of the solvent vapors and deliver them to the adsorption bed. As has been discussed earlier, major loss areas are drag-out on parts, leaks, spills, and disposal of waste solvent, none of which are greatly affected by the ventilation system. Improved ventilation design can increase an adsorber's overall emission control efficiency. Higher ventilation rate alone, however, will not necessarily be advantageous, since increased turbulence could disrupt the air/vapor interface causing an increase in emissions, all of which would not be captured by the collection systems. The effectiveness of the ventilation system can also be improved through use of drying tunnels and other devices which decrease losses due to dragout.

Poor operation has been found to decrease the control efficiency of carbon adsorption systems. Examples are dampers that do not open and close properly, use of carbon that does not meet specifications, poor timing of the desorption cycles, and excessive inlet flow rates. Desorption cycles must be frequent enough to prevent breakthrough of the carbon beds, but not so frequent as to cause excessive energy waste. The degreaser's air/vapor interface may be disturbed as a result of excessive adsorber inlet flow. This can increase losses due to low adsorber inlet collection efficiency. Good

Figure 3-4
DESORPTION CYCLE

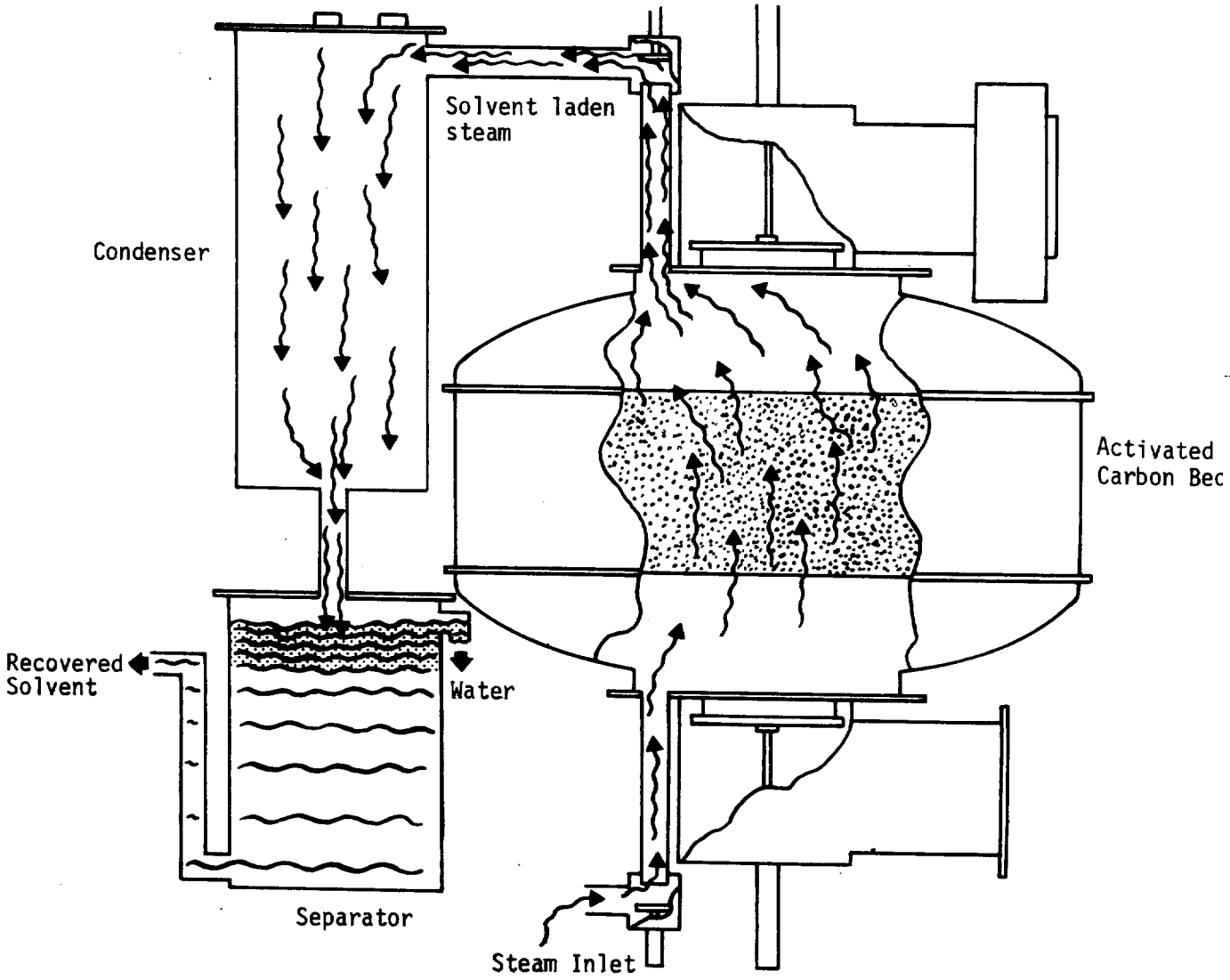

operating practice and proper maintenance will eliminate all of the above problems.

Carbon adsorption systems can effect the highest achievable level of emission control for many degreasing operations. Its positive aspects are well known. There are, however, a few negative aspects that should be mentioned. First, where solvent mixtures are used, the collected solvent emissions will be richer in the more volatile components. Thus, the recovered solvent mixture is rarely identical to that used in the cleaning system. Second, there are solvent components that are water soluble. Examples are acetone or ethyl alcohol used as co-solvents with trichlorotrifluoroethane and various stabilizers added to many solvents to inhibit decomposition. These water soluble components will be selectively extracted by the steam during the desorption process. In these cases, fresh solvent, stabilizers and/or co-solvents must be added to the recovered solvent before it is reused.

Tests performed on carbon adsorption systems controlling an open top vapor degreaser and a conveyorized non-boiling degreaser, measured 60 and 65 percent emission reduction respectively.[14] These levels of control are typical of properly designed, adjusted and maintained adsorption systems on degreasing operations which are suitable for this type of control. Three other carbon adsorption systems were tested and found to have low control efficiencies. Two of these systems achieved 21 percent and 25 percent emission reductions. A third was found to actually increase emissions by 8 percent.[15] These tests exemplify the need for proper application, design, operation, and maintenance of carbon adsorption systems.

3.1.1.5 Safety Switches -

Safety switches are devices used on vapor degreasers to prevent emissions during malfunctions and abnormal operation. The five main types of safety

switches are:

1. Vapor level control thermostat,
2. Condenser water flow switch and thermostat,
3. Sump thermostat,
4. Solvent level control,
5. Spray safety switch.

The first four safety switches listed above turn off the sump heat while the fifth turns off the spray.

The most important safety switch is the vapor level control thermostat. This device is activated when solvent vapor zone rises above the designed operating level. This can occur if the coolant flow is interrupted, for example. When the hot vapors are sensed, the sump heater is turned off thus minimizing vapor escape. This thermostat should be a manual reset type for manually operated degreasers. For conveyorized degreasers, the vapor level control thermostat should activate an alarm system. These controls should be checked frequently.

The condenser water flow switch and thermostat turn off the sump heat when either the condenser water stops circulating or the condenser water becomes warmer than specified. If the condenser water flow switch and thermostat is properly adjusted, then it will serve as a back-up for the safety vapor thermostat and also assure efficient operation of the condenser coils. In summer months, the cooling water for condensing coils often becomes too warm. In this case, the thermostats in a condenser water flow switch can signal a need for improvement, such as increasing the water flow rate. This problem occurred during a test performed for EPA.[16]

As oils, greases and other contaminants build up in the solvent, the boiling point of the mixture increases. Both the sump thermostat and solvent

level control prevent the sump from becoming too hot, thus causing solvent decomposition. The sump thermostat cuts off the heat when the sump temperature rises significantly above the solvent's boiling point. The solvent level control turns off the heat when the liquid level of the boiling sump drops down to the height of the sump heater coils. Without these controls, excessive heat could decompose the solvent, emitting such things as hydrochloric acid.

The spray safety switch is not used as often as the other safety switches, but it can offer a significant benefit. Specifically, if the vapor level drops below a specified level, then the pump for the spray application will be cut off until the normal vapor level is resumed. Thus, the spray safety switch prevents spraying above the vapor level which causes excessive emissions.[17]

The effectiveness of the five safety switches cannot be quantified because their operation results from poor degreaser maintenance and use. Nevertheless, considering the fact that vapor degreasers do not always receive proper attention and maintenance, it is expected that the safety switches will provide a significant reduction in emissions for typical vapor degreasing operations.

3.1.2 Controls to Minimize Carry-out

Carry-out emissions are the solvent emissions that result when clean parts still containing liquids or vapors are extracted from the vapor degreaser. As described in chapter 2, good operating practices are the primary method of reducing carry-out emissions. Furthermore, there are devices that can help minimize the carry-out from cold cleaners and conveyorized degreasers, but not generally from open top vapor degreasers.

The main control device for carry-out emissions from cold cleaners is a simple drainage facility. The two types of drainage facilities are the external and internal drainage racks (or shelves). The external drainage rack is attached to the side of the cold cleaner at the top. The liquid solvent from the cleaned parts drains into a trough and is returned to the cold cleaning bath. This control is inexpensive and easily retrofitted. An internal drainage facility is located beneath the cover. It may be a basket that is suspended over the solvent bath, or a shelf from which the solvent drains. Particularly with solvents of higher volatilities (i.e., much greater than that of mineral spirits), an internal drainage facility can prevent a significant solvent emission. The internal drainage facility sometimes cannot be reasonably retrofitted, because there may not be enough room inside the cold cleaner to drain parts while cleaning other parts.

The main control devices for carry-out emissions from conveyorized degreasers are a drying tunnel and rotating baskets. A drying tunnel is simply an extension from the exit of the conveyorized degreaser. This tunnel extension gives cleaned parts more time to dry completely. The drying tunnel should work particularly well in combination with carbon adsorption. Drying tunnels can be retrofitted, if there is adequate space. Rotating baskets may be used on cross-rod degreasers and ferris wheel degreasers. A rotating basket is a perforated cylinder containing parts to be cleaned that is slowly rotated through the cleaning system, so that the parts cannot trap liquid solvent. Rotating baskets are designed into the conveyorized system and hence are not easily retrofitted.

Conveyors themselves can contribute to carry-out emissions. Some designs cause less emissions than others. In general, these emissions are directly proportional to the surface area entering and leaving the cleaning

zone. One design, uses small pushers to move parts along fixed rods which support the work. This design is advertised to carry-out 70 percent less solvent than conventional wire mesh conveyors.

The effectiveness of control devices that help minimize carry-out emissions cannot be quantified. The amount of carry-out depends too much on the type of work loads (shape and crevices) and the quality of operation. Nevertheless, it is obvious that if the exiting cleaning parts visibly show liquid solvent, then carry-out emissions will be substantial.

3.1.3 Controls for Solvent Bath and Carry-out Emissions Combined

Two control systems reduce both solvent bath and carry-out emissions. They are the automated cover-conveyor system and a refrigeration condensation system. Both systems are relatively new designs and infrequently used in practice. They are somewhat complex and expensive in relation to most other control devices.

3.1.3.1 Automated Cover-Conveyor System -

The purpose of an automated cover-conveyor system is to close the cover of an open top vapor degreaser when parts are being cleaned and dried. Thus, the cover is open only for the short period of time when dry parts are actually entering or exiting. (It is possible to use this system on a cold cleaner but the solvent volatility and losses would generally have to be very high to justify the expense of such a system.) The automated cover must be capable of closing while the part is inside the degreaser. If the part is conveyed by means of a cable and hoist, then the cover can close horizontally and be split into two parts so that it closes at the center where the cable is located. If the parts are conveyed by means of a shelf that automatically lowers and rises, then the vapor degreaser can be covered by a permanent enclosure with a vertical door, (See Figure 3-5).

Figure 3-5

Elevator Design of Degreaser—Vapor Type

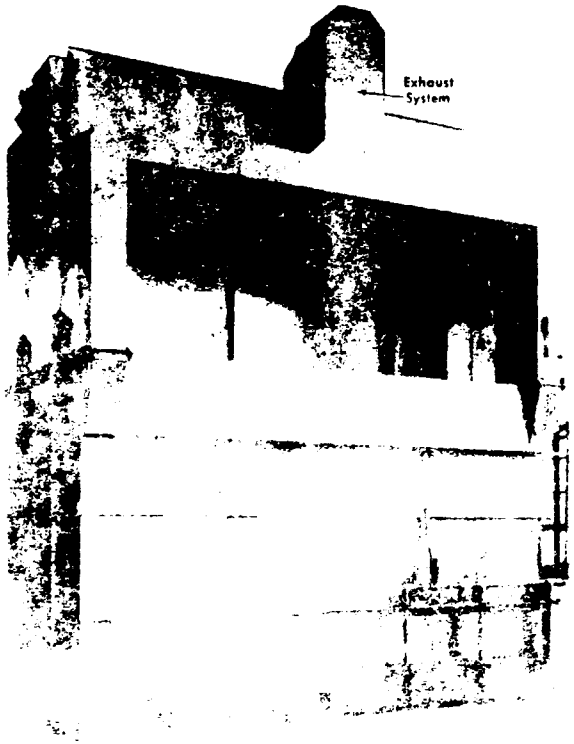

Above—Automatic Door Open for Loading or Unloading.

Below—Automatic Door Closed and Elevator Down in Cleaning Position.

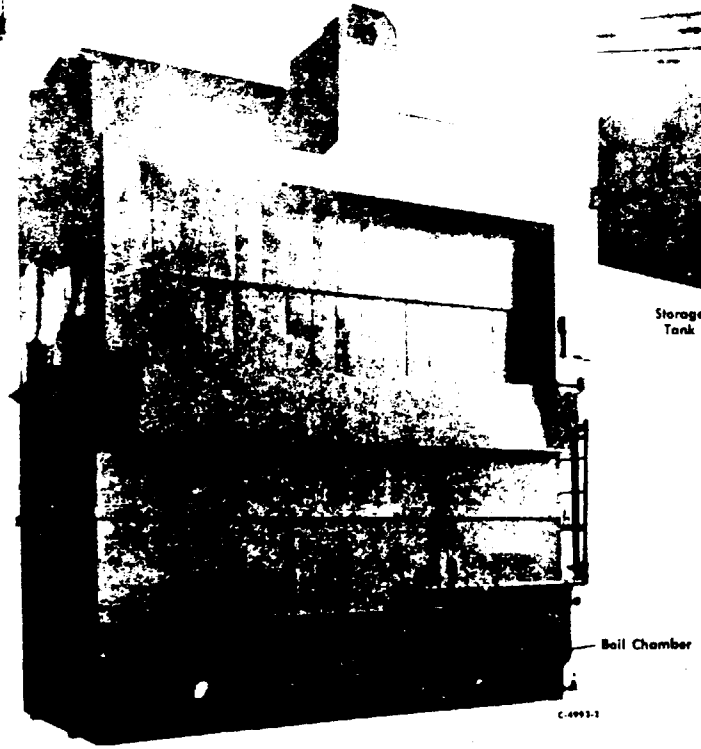

Above—Rear View.

Automated conveyor systems include adjustable timing delays for cleaning and drying and automatic cut-offs to position the work load for cooking and drying.

Because emissions could occur only for the short period of time when dry parts are entering or exiting the automated degreaser, it is expected that an automated cover-conveyor system would provide highly effective control.

3.1.3.2 Refrigeration Condensation -

Direct condensation of solvent vapors from exhaust air streams is a possible although perhaps difficult means of recovering solvent. Some insight into the problem is gained by examining Figure 3-6.[20]

Condensation will occur when an air/vapor stream is refrigerated to a temperature where the solvent's equilibrium vapor pressure is less than its actual vapor pressure. The actual vapor pressure is calculated by multiplying the percent solvent vapor concentration (by volume) by the total pressure (usually atmospheric). For example, 1000 ppm of perchloroethylene at atmospheric pressure yields an actual vapor pressure of 0.76 mm Hg (0.1 percent concentration multiplied by 760 mm Hg). Extrapolating from the graph, 0.76 mm Hg intersects curve #9 at -25°C; thus, condensation occurs below -25°C for perchloroethylene at 1000 ppm and 1 atmosphere.

Although solvent concentrations may reach 1000 ppm momentarily, the average concentration of chlorinated solvent vapors from typical operations is about 300 ppm (0.23 millimeters Hg).[21] Consequently, direct condensation of perchloroethylene would not usually occur until the temperature of the air/vapor stream was reduced to at least -40°C.

There are two major problems with refrigeration condensation. First, at these low temperatures, ice forms rapidly on the heat exchange surfaces, reducing the heat exchange efficiency. The ice formation also requires the remova

Figure 3-6. Vapor Pressures of Several Solvents

1	Methylene chloride	6	Ethylene dichloride (1,2-dichloroethane)	11	
2	1,1-Dichloroethane	7	Trichloroethylene	12	
3	Chloroform	8	1,1,2-Trichloroethane	13	
4	1,1,1-Trichloroethane	9	Perchloroethylene	14	
5	Carbon tetrachloride	10	Stoddard Solvent	15	

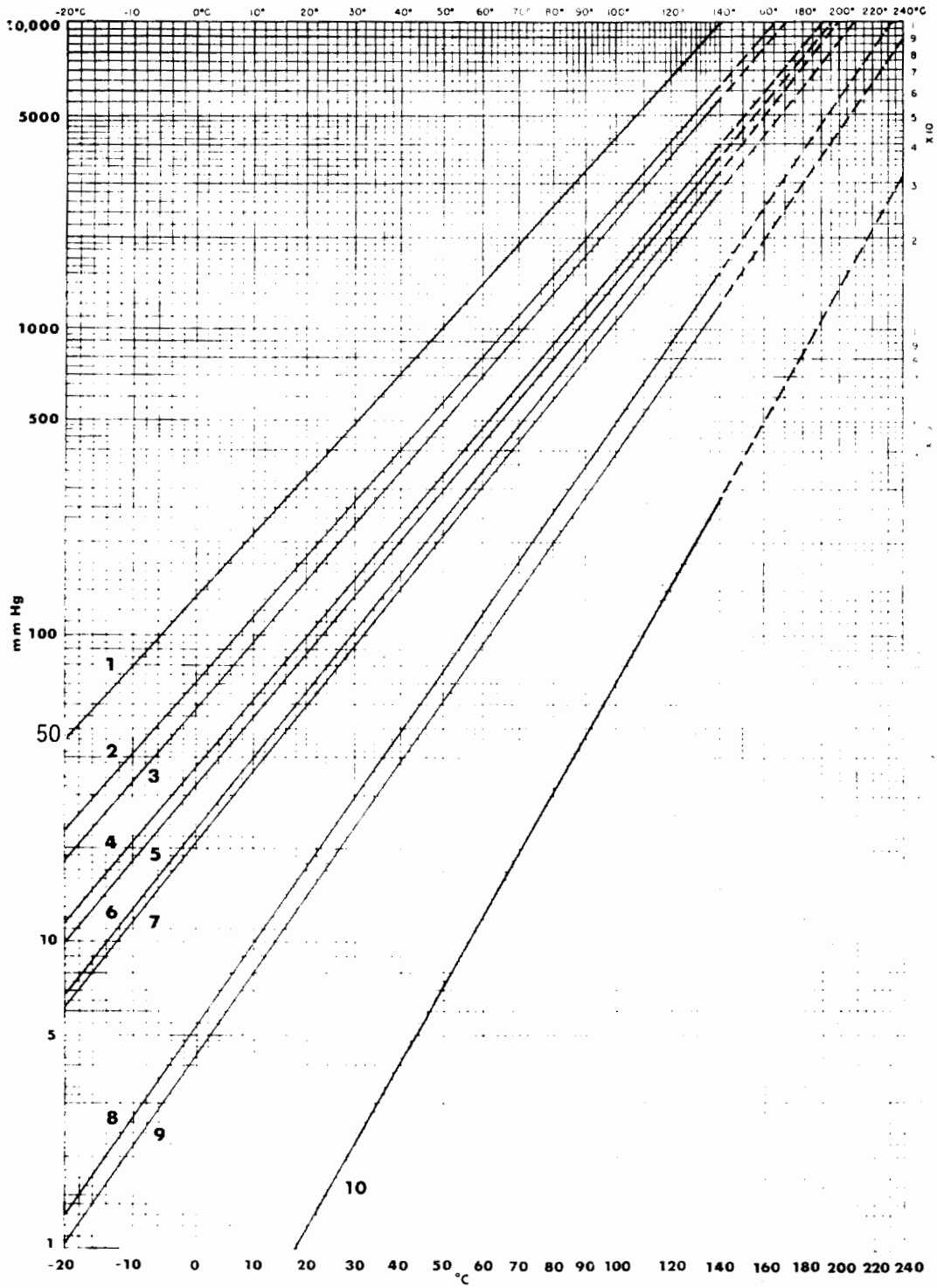

of a large amount of heat (1300 Btu's per pound) which will add significantly to the cost of this control. Second, when condensation occurs a fine mist of liquid solvent is formed. The problem is in removing this mist from the air stream.

This analysis indicates that it would be difficult to control emissions from degreasers with refrigeration condensation. However, this rests on two assumptions: (1) 1 atmosphere pressure is maintained and (2) vapors cannot be collected in higher concentrations. Still, this does not preclude its successful use. An example is one design which was reported after the initial EPA test program had been completed. The equipment manufacturer, Autosonics Inc., reported successful emission control using a prototype of their design, called the "Zero-Emission" vapor degreaser. This system employs refrigeration condensation along with carbon adsorption and is reported to be able to capture solvent vapors with unusually high efficiency. EPA tests on this degreaser are planned.

3.1.4 Control of Waste Solvent Evaporation

3.1.4.1 Current Practices -

Emissions from waste solvent occur through a number of diverse routes, none of which can be easily monitored or quantified. Based on the limited information currently available (see Appendix B.5), it is estimated that about 280 thousand metric tons of waste solvent were disposed of from metal degreasing operations in 1974. This is approximately one-third of the total metal degreasing emissions.

Most of this waste is disposed of in a manner such that it can evaporate into the atmosphere. A large fraction is indiscriminately dumped into drains or onto the grounds surrounding the using facility. Some waste solvent is stored in open containers and evaporates. A small amount of waste solvent finds its way to municipal or chemical landfills that make no

attempt to encapsulate the solvent. Some larger companies have used deep well injection, but overall this is considered an insignificant disposal route for waste solvent from degreasing. It has been estimated that these four disposal routes account for ∿35 percent of the total waste solvent load.

It is convenient for automotive maintenance facilities to dispose of their waste solvent along with their waste crankcase oil. Perhaps as much as 15 percent of the total waste solvent load (or ∿33 percent of the waste solvent from maintenance cold cleaners) enters this route. Crankcase oil is reprocessed, rerefined, used for dust control on unpaved roads or handled in other ways, none of which pay significant attention to the solvent fraction.

Properly controlled incineration is one of the few disposal routes which does not result in organic emissions to the atmosphere. However, only a small fraction (∿5 percent) of waste solvent is believed to be disposed of in this manner.

Solvent reclamation is the most environmentally acceptable route for waste solvent. It is believed that ∿45 percent of the waste solvent load is being reclaimed through distillation.[22,23] Primarily, halogenated solvents are distilled; petroleum related solvents, such as mineral spirits, are more difficult and less profitable to distill, because such solvents are flammable and inexpensive, compared to halogenated solvents.

3.1.4.2 Recommended Practices -

Reclamation Services - Reclamation services collect waste solvent, distill it, and return the reclaimed portion to the solvent user. Charges vary but are roughly equal to one half the market value of the solvent. In industrial areas where large numbers of users are present, solvent scavenging and reclamation is being practiced profitably. In rural areas, where users are

separated by large distances, collection and transportation is a limiting factor. However, suitable collection systems could be devised and reclamation service could be expanded beyond the industrial areas. For example, it would be possible for the rural user to store waste solvent in sealed containers until sufficient volume is acquired to make collection economical.

Another alternative is offered by the Safety Kleen Corporation. This firm provides a service of supplying both the solvent and cold cleaning equipment to users. The solvent used is periodically collected and replaced with fresh solvent by the company and the used solvent is distilled at central locations. The firm operates in industrial areas throughout the U.S.

In-House Reclamation - Many large users practice in-house reclamation. In vapor degreasing, the use of stills is fairly common. For instance, nearly all conveyorized vapor degreasers and large open top degreasers are equipped with stills, (see Figure 3-7). These stills have been customarily used because they reduce the maintenance cost of cleaning the vapor degreasing system, enable the system to remove soils collected without interrupting the cleaning process and recover valuable quantities of solvent. The Dow Report estimated that the total yearly cost of in-house reclamation of chlorinated solvents can be recovered from the first 350 gallons distilled. Nonchlorinated solvents, because of their flammability and lower recovery value, would require 6 to 12 times this quantity.

Bottoms from all distillation columns are of a hazardous nature, containing metals, sludge, residual solvent, etc. They must be disposed of properly in chemical landfills or preferably through a properly controlled high temperature incineration facility.

Each solvent class exhibits its own peculiar problems in distillation. Chlorinated solvents are partially stripped of their stabilizers during

Figure 3-7
EXTERNAL STILL

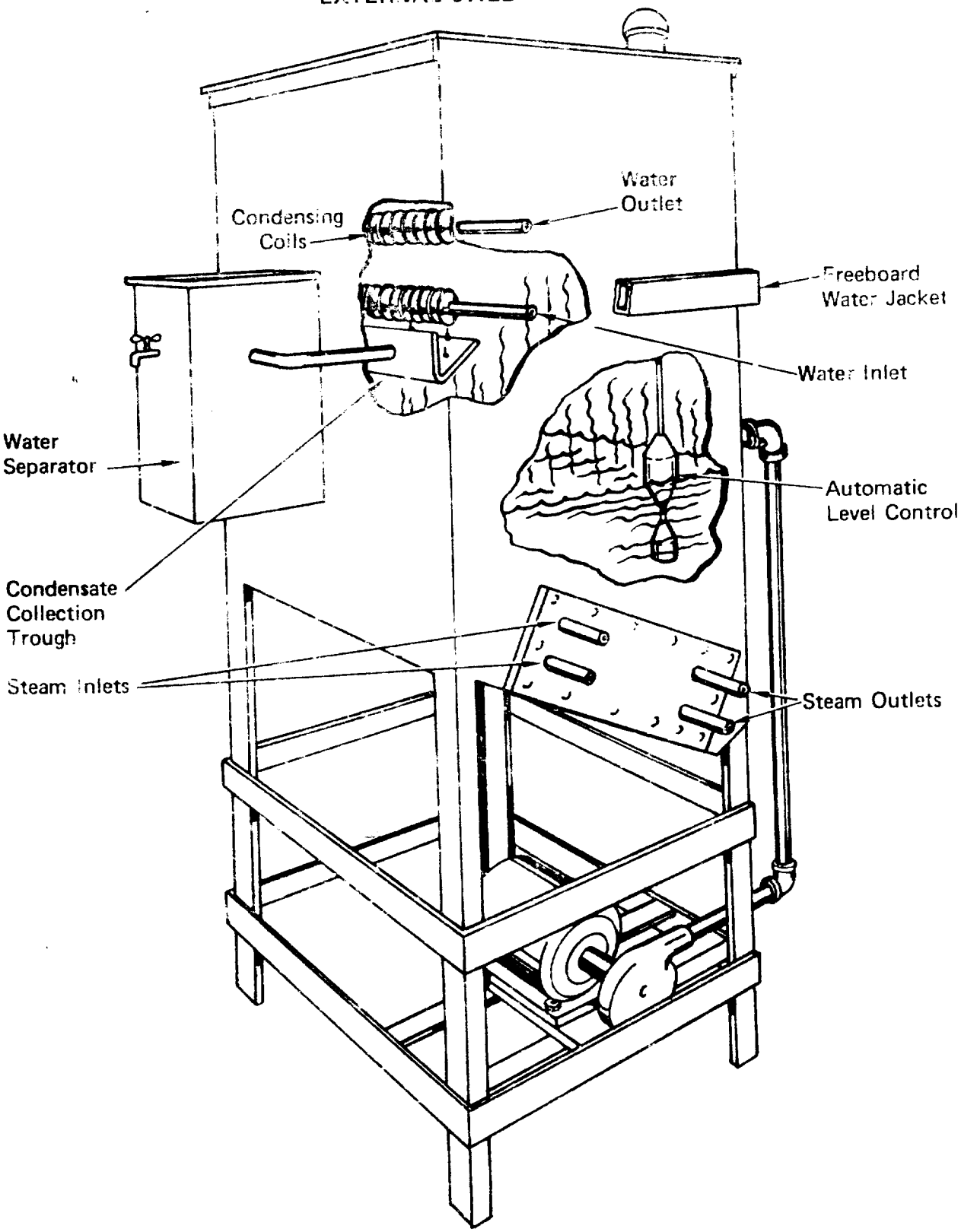

distillation. These must be replaced to avoid chemical decomposition of the recovered solvent. Nonchlorinated solvents are quite flammable and require equipment designed to prevent fires and explosions. Solvent blends usually consist of solvents of different boiling points; thus, the solvent initially recovered has a higher portion of lower boiling point solvents. Certain contaminates can also greatly increase the difficulty of distilling any solvent. For example, azeotropes can form between contaminates and solvents during distillation, making separation difficult. Also, adverse chemical reactions can occur. For these reasons distillation service companies generally analyze waste solvent. The company using in-house distillation can often eliminate analysis and avoid many of the problems encountered by services which distill a mixture of solvents from different users, because the solvents and the contaminants are known.

Direct Incineration - Direct incineration in a properly controlled facility is another environmentally acceptable disposal route for waste solvent. Incineration does not, however, produce a useable product and often requires significant amounts of supplementary fuel. For these reasons, it is not as attractive as reclamation. Nonchlorinated solvents are fuel oil grade waste and after simple filtration of hazardous contaminates could provide the heat value necessary for incineration of chlorinated compounds. However, their fuel value will be considerably less than their solvent value.

There are approximately 25 to 50 facilities in the United States capable of acceptably incinerating chlorinated solvents. Such facilities require high temperatures (~1200°C), sufficient residence time (about 2 seconds), and sophisticated exhaust gas cleaning equipment to remove halogenated compounds (primarily HCl), particulates, and other contaminants. Capital investment to

build this type of incinerator is significant (1.5 to 5 million dollars for 6 gallon of waste per minute capacity). Operating costs have been estimated at less than 2¢/lb of solvent incinerated.[24]

Chemical Landfills - Currently there are chemical landfills and encapsulation processes approved for the disposal of waste solvent. However, disposal in this manner could result in loss of volatile organics. These facilities can prevent emissions if extreme care is taken to eliminate evaporation and permeation. One method has been to seal the waste solvent in lined drums and surround the drums with 4 to 20 ft. of packed clay. No testing has been done to assure that even this method will control organic emissions. It is believed that most chemical landfills are not adequate for the disposal of waste solvent.

It is not the purpose of this report to evaluate waste solvent disposal facilities in depth, rather only to show that they are available, even though the degree of their excessibility varies geographically. EPA's Office of Solid Waste Management Programs is currently preparing regulations, under the Resource Conservation and Recovery Act of 1976, to cover transportation, storage, treatment and disposal of hazardous waste. These regulations are targeted for promulgation in April of 1978 and hopefully will apply to all waste solvents from degreasing.

3.1.5 Other Control Devices

Two other control devices could conceptually be used to reduce solvent bath emissions: incineration and liquid absorption. Generally, incineration appears to be too expensive and energy intensive, and liquid absorption presents special technical problems and could even cause increased atmospheric emissions.

3.1.5.1 Incineration -

Incineration has been used for many years to control emissions of organics to the atmosphere. For degreasing operations, it could be applied most easily to systems using petroleum hydrocarbons and oxygenated solvents which readily combust to carbon dioxide and water. Application to systems using halogenated hydrocarbons would be more difficult. Although halogenated hydrocarbons are non-flammable under normal conditions, they can be pyrolyzed at temperatures in the incineration range. The pyrolytic decomposition of chlorinated hydrocarbons, for example, will release chlorine, hydrochloric acid, and phosgene depending upon the conditions of oxidation. These products would have to be removed from the off-gas stream of the incinerator using sophisticated gas cleaning equipment before exhausting to the atmosphere.

The cost of incineration could also be high. First, capital requirements are generally large, particularly in comparison to the relatively low cost of most degreasers. Furthermore, costs would be significantly increased with the addition of gas cleaning equipment, were that needed. Next, solvent concentrations in exhaust streams are frequently below the range required to sustain combustion; thus, supplemental fuel would be required. Scarce fuel resources would make this a limiting factor.

3.1.5.2 Liquid Absorption -

Liquid absorption is a well known process that has been investigated for use in solvent metal cleaning. For example, trichloroethylene vapors in air could be substantially reduced by absorption in mineral oil. However, at an absorption column temperature of 30°C (86°F), the air stream leaving the column might contain about 120 ppm mineral oil. Thus, the process could result in control of one hydrocarbon but emission of another at a nearly equal or possibly greater rate.[10]

Chilling the absorbing fluid would reduce its concentration in the exhaust air. However, cooling to a temperature below 0°C (32°F) would cause ice formation in the column since water is insoluble in mineral oil. Although this could be avoided by prerefrigeration of the air stream, the use of refrigeration would greatly increase energy consumption. Finally, the energy requirement for recovering the solvent from the mineral oil is great. Thus, it appears that this method of emission control is impractical except for the recovery of (1) high concentrations of solvent vapors in air, (2) very valuable vapors or (3) highly toxic chemical vapors.[19]

3.2 COMPLETE CONTROL SYSTEMS

A complete emission control system utilizes both control equipment and operating procedures. Although controls can be combined in many ways to form many different control systems, two basic control systems for each type degreaser are presented here. Generally, control system A consists of proper operating practices and simple, inexpensive control equipment. Control system B consists of system A plus other devices that increase the effectiveness of control. The details of control system A or B can be modified to arrive at the level of control needed.

The emission control efficiency of reasonably well designed and maintained control systems is estimated from the present test data base. Control systems which are seriously defective are not uncommon. A few such systems were even recommended unintentionally by control system vendors to EPA as being exemplary; it required close inspection and sometimes emission measurements to discover that the systems were defective.

3.2.1 Cold Cleaning Control Systems

The most important emission control for cold cleaners is the control of waste solvent. The waste solvent needs to be reclaimed or disposed of so that a minimum evaporates into the atmosphere. Next in importance are the operating practices of closing the cover and draining cleaned parts. Several other control techniques become significant only in a small fraction of applications. The control devices and operating practices for control systems A and B are summarized in Table 3-1.

There is not a large difference in effect between system A and B, because most of the cold cleaning emissions are controlled in system A. If the requirements of system A were followed conscientiously by nearly all of the cold cleaning operators, there would be little need for the additional system B requirements. However, because cold cleaning operators can tend to be lax in keeping the cover closed, equipment requirements #1 and #4 in system B are added. Similarly, the modifications for #2 and the equipment requirements in #3 would effect significant emission reductions in a few applications.

Although the effectiveness of the control systems depends greatly on the quality of operation, average cases have been approximated, (see Appendix B.2) System A could reduce cold cleaning emissions by 50 (±20) percent and system B may reduce it by 53 (±20) percent. The lower end of the range represents the emission reduction projected for poor compliance, and the higher end represents excellent compliance. As can be readily seen from these estimates, the expected benefit from system B is only slightly better than that for system A for an average cold cleaner, assuming low volatility solvents. This difference is small because the additional devices required in system B generally control only bath evaporation, which represents about

TABLE 3-1. CONTROL SYSTEMS FOR COLD CLEANING

Control System A

Control Equipment:

1. Cover

2. Facility for draining cleaned parts

3. Permanent, conspicuous label, summarizing the operating requirements

Operating Requirements:

1. Do not dispose of waste solvent or transfer it to another party, such that greater than 20 percent of the waste (by weight) can evaporate into the atmosphere.* Store waste solvent only in covered containers.

2. Close degreaser cover whenever not handling parts in the cleaner.

3. Drain cleaned parts for at least 15 seconds or until dripping ceases.

Control System B

Control Equipment:

1. Cover: Same as in System A, except if (a) solvent volatility is greater than 2 kPa (15 mm Hg or 0.3 psi) measured at 38°C (100°F),** (b) solvent is agitated, or (c) solvent is heated, then the cover must be designed so that it can be easily operated with one hand. (Covers for larger degreasers may require mechanical assistance, by spring loading, counterweighting or powered systems.)

2. Drainage facility: Same as in System A, except that if solvent volatility is greater than about 4.3 kPa (32 mm Hg or 0.6 psi) measured at 38°C (100°F), then the drainage facility must be internal, so that parts are enclosed under the cover while draining. The drainage facility may be external for applications where an internal type cannot fit into the cleaning system.

3. Label: Same as in System A

4. If used, the solvent spray must be a solid, fluid stream (not a fine, atomized or shower type spray) and at a pressure which does not cause excessive splashing.

5. Major control device for highly volatile solvents: If the solvent volatility is > 4.3 kPa (33 mm Hg or 0.6 psi) measured at 38°C (100°F), or if solvent is heated above 50°C (120°F), then one of the following control devices must be used:

a. Freeboard that gives a freeboard ratio*** $\geq$ 0.7

b. Water cover (solvent must be insoluble in and heavier than water)

c. Other systems of equivalent control, such as a refrigerated chiller or carbon adsorption.

Operating Requirements:

Same as in System A

*Water and solid waste regulations must also be complied with.
**Generally solvents consisting primarily of mineral spirits (Stoddard) have volatilities < 2 kPa.
***Freeboard ratio is defined as the freeboard height divided by the width of the degreaser.

20 to 30 percent of the total emission from an average cold cleaner. For cold cleaners with high volatility solvents, bath evaporation may contribute ~50 percent of the total emission; it is estimated that system B may achieve 69 (±20) percent control efficiency, whereas system A might experience only 55 (±20) percent control.

3.2.2 Control Systems for Open Top Vapor Degreasing

The basic elements of a control system for open top vapor degreasers are proper operating practices and use of control equipment. There are about ten main operating practices. The control equipment includes a cover, safety switches and a major control device, either high freeboard, refrigerated chiller, enclosed design or carbon adsorption. Two control systems for open top vapor degreasers are outlined in Table 3-2.

The vapor level thermostat is not included because it is already required by OSHA on "open surface vapor degreasing tanks." The sump thermostat and solvent level control are used primarily to prevent solvent degradation and protect the equipment and thus are also not included here. The emission reduction by these controls is a secondary effect in any event. The two safety switches presented serve primarily to reduce vapor solvent emissions.

System A may reduce open top vapor degreasing emissions by 45 (±15) percent, and system B may reduce them by 60 (±15) percent. For an average size open top vapor degreaser, system A and B would reduce emissions from 9.5 m tons/year down to about 5.0 and 3.8 m tons/year, respectively. It is clear that system B is appreciably more effective than system A.

3.2.3 Control Systems for Conveyorized Degreasers

Control devices tend to work most effectively on conveyorized degreasers, mainly because they are enclosed. Since these control devices can usually result in solvent savings, they often will net an annualized profit.

TABLE 3-2. COMPLETE CONTROL SYSTEMS FOR OPEN TOP VAPOR DEGREASERS

Control System A

Control Equipment:

1. Cover that can be opened and closed easily without disturbing the vapor zone.

Operating Requirements:

1. Keep cover closed at all times except when processing work loads through the degreaser.

2. Minimize solvent carry-out by the following measures:

a. Rack parts to allow full drainage.
b. Move parts in and out of the degreaser at less than 3.3 m/sec (11 ft/min).
c. Degrease the work load in the vapor zone at least 30 sec. or until condensation ceases.
d. Tip out any pools of solvent on the cleaned parts before removal.
e. Allow parts to dry within the degreaser for at least 15 sec. or until visually dry.

3. Do not degrease porous or absorbent materials, such as cloth, leather, wood or rope.

4. Work loads should not occupy more than half of the degreaser's open top area.

5. The vapor level should not drop more than 10 cm (4 in) when the work load enters the vapor zone.

6. Never spray above the vapor level.

7. Repair solvent leaks immediately, or shutdown the degreaser.

8. Do not dispose of waste solvent or transfer it to another party such that greater than 20 percent of the waste (by weight) will evaporate into the atmosphere. Store waste solvent only in closed containers.

9. Exhaust ventilation should not exceed 20 m^3/min per m^2 (65 cfm per ft^2) of degreaser open area, unless necessary to meet OSHA requirements. Ventilation fans should not be used near the degreaser opening.

10. Water should not be visually detectable in solvent exiting the water separator.

Control System B

Control Equipment:

1. Cover (same as in system A).

2. Safety switches

a. Condenser flow switch and thermostat - (shuts off sump heat if condenser coolant is either not circulating or too warm).
b. Spray safety switch - (shuts off spray pump if the vapor level drops excessively, about 10 cm (4 in).

3. Major Control Device:

Either: a. Freeboard ratio greater than or equal to 0.75, and if the degreaser opening is > 1 m^2 (10 ft^2), the cover must be powered,
b. Refrigerated chiller,
c. Enclosed design (cover or door opens only when the dry part is actually entering or exiting the degreaser.),
d. Carbon adsorption system, with ventilation $\geq$ 15 m^3/min per m^2 (50 cfm/ft^2) of air/vapor area (when cover is open), and exhausting <25 ppm solvent averaged over one complete adsorption cycle, or
e. Control system demonstrated to have control efficiency, equivalent to or better than any of the above.

4. Permanent, conspicuous label, summarizing operating procedures #1 to #6.

Operating Requirements:

Same as in System A

Two recommended control systems for conveyorized degreasers are shown in Table 3-3. Control system A requires only proper operating procedures which can be implemented, in most cases, without large capital expenditures. Control system B, on the other hand, requires a major control device.

Major control devices can provide effective and economical control for conveyorized degreasers. A refrigerated chiller will tend to have a high control efficiency, because room drafts generally do not disturb the cold air blanket. A carbon adsorber also tends to yield a high control efficiency, because collection systems are more effective and inlet streams contain higher solvent concentrations for conveyorized degreasers than for open top vapor degreasers.

Small scale conveyorized degreasing applications can result in significantly high annualized costs from using a major control device. Consequently, many operators may be motivated to use the less expensive open top vapor degreaser in place of a conveyorized one, even though more solvent is emitted for an equivalent work load. Thus, it is reasonable to exempt conveyorized degreasers wit less than 2.0 m^2 of air/vapor interface from requirement of a major control device.

The remaining three control devices recommended in system B should entail nominal expense in relation to their potential solvent savings. Because of the wide diversity of applications for conveyorized degreasing, there may be a few applications where the drying tunnel or a minimized opening may be impractical; thus, occasional exceptions may have to be made for these two requirements. For example, a plant might not have enough space available to permit use of a drying tunnel; also, hanging parts may occasionally swing from a conveyor line more than the clearance allowed by the control requirement.

The control efficiency for system A is estimated at 25 ($\pm$5) percent and for system B, 60 ($\pm$10) percent. Emissions from a typical conveyorized degreaser

TABLE 3-3. CONTROL SYSTEMS FOR CONVEYORIZED DEGREASERS

Control System A

Control Equipment: None

Operating Requirements:

1. Exhaust ventilation should not exceed 20 m^3/min per m^2 (65 cfm per ft^2) of degreaser opening, unless necessary to meet OSHA requirements. Work place fans should not be used near the degreaser opening.

2. Minimize carry-out emissions by:

a. Racking parts for best drainage.
b. Maintaining verticle conveyor speed at < 3.3 m/min (11 ft/min).

3. Do not dispose of waste solvent or transfer it to another party such that greater than 20 percent of the waste (by weight) can evaporate into the atmosphere. Store waste solvent only in covered containers.

4. Repair solvent leaks immediately, or shutdown the degreaser.

5. Water should not be visibly detectable in the solvent exiting the water separator.

Control System B

Control Equipment:

1. Major control devices; the degreaser must be controlled by either:

a. Refrigerated chiller,
b. Carbon adsorption system, with ventilation $\geq$ 15 m^2/min per m^2 (50 cfm/ft^2) of air/vapor area (when down-time covers are open), and exhausting <25 ppm of solvent by volume averaged over a complete adsorption cycle, or
c. System demonstrated to have control efficiency equivalent to or better than either of the above.

2. Either a drying tunnel, or another means such as rotating (tumbling) basket, sufficient to prevent cleaned parts from carrying out solvent liquid or vapor.

3. Safety switches

a. Condenser flow switch and thermostat - (shuts off sump heat if coolant is either not circulating or too warm).
b. Spray safety switch - (shuts off spray pump or conveyor if the vapor level drops excessively, e.g. > 10 cm (4 in.)).
c. Vapor level control thermostat - (shuts off sump heat when vapor level rises too high).

4. Minimized openings: Entrances and exits should silhouette work loads so that the average clearance (between parts and the edge of the degreaser opening) is either <10 cm (4 in.) or <10 percent of the width of the opening.

5. Down-time covers: Covers should be provided for closing off the entrance and exit during shutdown hours.

Operating Requirements:

1. to 5. Same as for System A

6. Down-time cover must be placed over entrances and exits of conveyorized degreasers immediately after the conveyor and exhaust are shutdown and removed just before they are started up.

may decrease from 27 to ∿20 and ∿11 (metric) tons/yr for systems A and B, respectively. Thus, system B offers a much greater emission reduction per degreaser for conveyorized degreasers than for cold cleaners or open top vapor degreasers.

3.3 REFERENCES

1. American Society for Testing and Materials (ASTM), Committee D-26, "Recommended Practice for New Source Performance Standards to Control Solvent Metal Cleaning Emissions."
2. Surprenant, K. S. and Richards, D. W. of Dow Chemical Company, "Study to Support New Source Performance Standards for Solvent Metal Cleaning Operations," Vol. 2, prepared for Emission Standards and Engineering Division (ESED), under Contract # 68-02-1329, Task Order #9, June 30, 1976.
3. Ibid.
4. Ibid, Appendix C-9.
5. American Society for Testing Materials, Op. Cit.
6. Surprenant, K. S., Op. Cit, Appendix C-12.
7. Information provided by H. A. Rowan of Magnus Division of Economics Lab. Inc., S. Plainfield, N. J., by telephone to J. C. Bollinger, EPA March 28, 1977.
8. Information provided by J. Picorney of Baron Blakeslee Inc., Chicago, by telephone to J. C. Bollinger, EPA, November 18, 1976.
9. "Trip Report - Collins (now Rucker Ultrasonics) Inc., Concord, Calif." EPA memorandum from J. C. Bollinger to D. R. Patrick, November 5, 1976.
10. Surprenant, K. S., Op. Cit., Appendices C-3, C-5, and C-7.
11. Ibid, pg. 4-5.
12. JACA Corp., Fort Washington, Pa., "Air Pollution Control of Hydrocarbon Emissions - Solvent Metal Cleaning Operations," prepared for EPA, Office of Technology Transfer, Seminar: "Upgrading Metal Machining, Fabricating, and Coating Operations to Reduce Pollution."
13. Surprenant, K. S., Op. Cit., pg. 4-59.
14. Ibid, Appendices C-10 and C-11.

15. Ibid, Appendices C-4, C-5, and C-8.

16. Ibid, Appendix C-7.

17. Kearney, T. J., Detrex Chem. Inc., letter to J. F. Durham, EPA, February 17, 1976.

18. Surprenant, K. S., Op. Cit.

19. Ibid.

20. Ibid, pg. 4-16.

21. Ibid, pg. 4-18.

22. Information provided by F. X. Barr, Graymills Co., Chicago, by telephone to J. L. Shumaker, EPA, January 13, 1977.

23. Information provided by K. S. Surprenant, Dow Chemical, Midland, Michigan by telephone to J. L. Shumaker, EPA, January 11, 1977.

24. Information provided by Hydroscience, Inc., Knoxville, Tennessee by telephone to J. L. Shumaker, EPA, March 24, 1977.

4.0 COST ANALYSIS

4.1 INTRODUCTION

4.1.1 Purpose

The purpose of this chapter is to present estimated costs for applying alternative emission control techniques in the metal cleaning, or degreasing industry. Cost data will be provided for hydrocarbon controls on cold cleaners, open top vapor degreasers, and conveyorized vapor degreasers. These cost data will be presented for model new facilities as well as for model existing plants.

4.1.2 Scope

With regard to cold cleaners, control cost estimates will reflect the use of the following techniques:

1. drainage facility;
2. mechanically assisted cover (spring loaded).

The scope of this section includes both low volatility solvents, such as mineral spirits, and high volatility solvents such as 1,1,1- trichloroethane. Costs will be presented for only one size cold cleaner facility.

No incremental costs for housekeeping controls are presented in this chapter. A reasonable judgment is that such costs are negligible, particularly considering that they are offset by savings in recovering additional solvent from improved housekeeping.

With regard to open top vapor degreasers, control cost estimates will be presented for two sizes of facilities that primarily use trichloroethylene solvent or 1,1,1-trichloroethane solvents. The control cost estimates will reflect the following techniques:

1. use of a manual cover;
2. use of a manual or powered cover in combination with extended freeboard;
3. refrigerated chiller;
4. carbon adsorber;

As in the case of cold cleaners, incremental costs for housekeeping controls on open top vapor degreasers are not presented because they appear to be negligible.

With regard to conveyorized vapor degreasers, control cost estimates will be presented for facilities that primarily use trichloroethylene or perchloroethylene solvents. The control cost estimates will reflect the use of the following techniques:

a. carbon adsorber
b. refrigerated chillers

Again, incremental costs for housekeeping are not presented because they appear to be negligible.

4.1.3 Model Plants

Control cost estimates are presented for typical model degreasers in the metal cleaning industry. Specific model plant parameters will be presented in the subsequent portions of this chapter. Admittedly, control costs may vary from one installation to another, perhaps even appreciably from the costs described for the models in this chapter. However, the difficulty of obtaining actual plant control costs requires use of model plants. To the extent possible, EPA has incorporated actual plant cost information into the cost analysis.

Cost information is presented both for typical new model degreasers as well as for typical existing model facilities. Model degreasers depicting size, design, and solvent usage have been developed. The purpose of this is to show the relative variation in control equipment costs with these factors. Although the degreaser models chosen for the analysis are believed to be representative of degreasers used throughout the industry, no attempt has been made to span the range of existing degreaser designs and sizes.

4.1.4 Capital Cost Estimates

Control cost estimates comprise installed capital costs and annualized operating costs. The installed capital cost estimates reflect the cost of designing, purchasing, and installing a particular control device. These estimates include costs for both major and auxiliary equipment, rearrangement or removal of any existing equipment, site preparation, equipment installation and design engineering. No attempt has been made to include costs for lost production during equipment installation or start-up. For degreasing operations, most of the controls discussed will take a matter of hours for installation which should minimize delays in production. All capital costs reflect first quarter 1977 costs. In general, information for capital costs has been developed through contacts with degreaser equipment manufacturers. In addition, an EPA contractor study[1] and EPA in-house files have been used to develop the capital costs.

4.1.5 Annualized Costs

Annualized cost estimates include costs for operating labor, maintenance and utilities, credits for solvent recovery, depreciation, interest, administrative overhead, property taxes, and insurance. Operating cost estimates

have been developed on the basis of the EPA contractor study cited above. The number of annual operating hours was assumed to be 2250 hours. The cost of electricity is assessed at 4 cents per kilowatt-hour.[2] Solvent prices used were $0.20 per kilogram for mineral spirits, and $0.43 for trichloroethylene and $0.41 for the chlorinated blended solvent used in cold cleaning. These solvent prices are based on recent quotations from the Chemical Marketing Reporter.[3] Maintenance costs for all controls (except housekeeping) were estimated to be 4 percent of the purchase cost of the equipment. Estimates of depreciation and interest costs have been developed by EPA based on the use of the capital recovery factor, an interest rate of 10 percent, and an equipment life of 10 years. In addition to costs for depreciation and interest, other capital charges include a 4 percent charge for administrative overhead, property taxes, and insurance.

4.2 COLD CLEANERS

4.2.1 Model Plant Parameters

The model parameters that were used in developing control costs for cold cleaners are shown in Table 4-1. These parameters are based on industry contacts and EPA studies of the solvent degreasing industry. The most common type of cleaning is represented by low volatile solvent cleaning. Also shown is high volatile solvent cleaning, which is important from the standpoint of higher emission rates. The emission rates in Table 4-1 represent typical values. The recovered solvent values and the cost of solvent are used to estimate solvent credits which will reduce the annualized control costs. The assumed composition for the high volatility solvent blend is 60 percent 1,1,1-trichloroethane, 20 percent xylene, and 20 percent mineral spirits.

Table 4-1. COST PARAMETERS FOR MODEL COLD CLEANERS

	Low Volatility Solvents	High Volatility Solvents
Working Area, m^2	0.5	0.5
Solvent Used	Mineral Spirits	Blended Solvent
Uncontrolled Emission Rate, metric tons per year	0.25	0.40
Emission Rate with House-keeping Requirements, metric tons per year	0.16	0.32
Solvent Recovered by Control System, metric tons per year	0.024	0.096
Solvent cost, $ per kg	0.20	0.41

Source: EPA assumptions based on industry contacts, contractor studies and in-house files.

4.2.2 Control Costs

Costs for control of emissions from cold cleaners have been developed for the following cases for model new and existing cold cleaners:

1. drainage facility for low volatility solvent cleaning
2. drainage facility plus a mechanically assisted cover for high volatility solvent cleaning.

The drainage facility consists of an external rack equipped with a drain line to return recovered solvent to the storage tank, which supplies the solvent for cleaning. The mechanically assisted cover consists of a spring loaded plunger which helps the operator to easily open and close the cover.

The costs for these equipment features are presented in Table 4-2. Estimates are presented for installed capital costs, annualized costs, and the cost per kilogram of hydrocarbon controlled. The capital costs for the drainage facility are the same for an existing cleaner as for a new one because of the ease with which it can be retrofitted. The capital costs for the cover are for the spring loaded plunger which can be retrofitted onto the cover of an existing cleaner. These costs were provided to EPA by a manufacturer of cold cleaning equipment.[4,5] One hour of labor is assumed as the requirement for installing the spring loaded plunger.

The cost of hydrocarbon control per kilogram of recovered solvent is quite sensitive to the value of the recovered solvent. Note that the low volatility solvent cleaner in Table 4-2 incurs a cost of $0.021 per kilogram whereas the high volatility solvent cleaner saves $0.31 per kilogram for the new facility and $0.267 per kilogram for the existing facility.

Table 4-2. CONTROL COSTS FOR TYPICAL COLD CLEANERS
(Vapor to Air Area of 0.5m2)

	Low Volatility Solvent	High Volatility Solvent
I. Model New Facilities		
Installed Capital ($)	25	45
Direct operating costs ($/yr)	1.00	1.30
Capital charges ($/yr)	4.30	7.72
Solvent cost (credit) ($/yr)	(4.80)	(9.36)
Annualized cost (credit) ($/yr)	0.50	(3.[illegible])
Controlled emissions (metric tons/year)	0.024	0.096
Cost (credit), $ per Kg controlled	.021	(0.[illegible])
II. Model Existing Facilities		
Installed capital ($)	25	45
Direct operating costs ($/yr)	1.00	2.60
Capital charges ($/yr)	4.30	7.15
Solvent cost (credit) ($/yr)	(4.80)	(9.36)
Annualized cost (credit) ($/yr)	0.50	(5.[illegible])
Controlled emissions (metric tons/year)	0.024	0.096
Cost (credit), $ per Kg controlled	0.021	(0.267)

Source: Reference 4, 5 for estimates of capital and annualized costs

4.3 OPEN TOP VAPOR DEGREASERS

4.3.1 Model Plant Parameters

The model parameters that were used in developing control costs for two sizes of open top vapor degreasers are displayed in Table 4-3. The two sizes represented are characterized by working area and solvent emissions. These parameters were selected as a result of industry contacts and EPA studies of the industry. The emission rates in Table 4-3 represent typical values. The working area is used to determine costs for covers, refrigerated chillers, and freeboard extensions. The assumption used to estimate costs is that the length of the working area is twice the width. The recovered solvent values and the cost of solvent are used to estimate solvent credits which are deducted from the annualized costs of the control devices.

4.3.2 Control Costs

Costs for control of emissions from open top vapor degreasers have been developed for the following cases for model new and existing degreasers:

1. manual cover;
2. manual or powered cover for working area exceeding 1.0 m^2 in combination with extended freeboard;
3. refrigerated chiller;
4. carbon adsorber.

Table 4-4 presents the costs for these controls on the average sized degreaser, and Table 4-5 presents costs for the smaller degreaser. Costs are presented in terms of installed capital costs, annualized costs, and the cost per kilogram of hydrocarbon controlled.

Table 4-3. COST PARAMETERS FOR MODEL OPEN TOP VAPOR DEGREASERS

	Typical Degreaser	Small Degreaser
Working Area, m^2	1.67	0.83
Uncontrolled Emission Rate, metric tons per year	9.5	4.75
Emission rate with housekeeping requirements, metric tons per year	6.7	3.35
Solvent recovered by control system, metric tons per year		
a) Manual cover	2.0	1.0
b) High freeboard and powered cover	2.7	1.35[1]
c) Chiller	3.0	1.50
d) Carbon adsorber	3.3	1.65
Solvent Cost, $ per kg	0.43	0.43

(1) Manual cover and high freeboard.

SOURCE: EPA assumptions based on industry contact, contractor studies, and in-house files.

Table 4-4 CONTROL COSTS FOR TYPICAL SIZE [illegible] TOP VAPOR DEGREASER
(Vapor to Air Area of 1.67 m^2)

Control Technique	Manual Cover	Carbon Adsorption	Refrigerated Chiller	Extended Freeboard & Powered Cover
I. Model New Facilities				
Installed capital ($)	250[1]	7400[2]	4900[3]	6500[4]
Direct operating cost ($/yr)	10	451	259	100
Capital charges ($/yr)	43	268	840	430
Solvent cost (credit) ($/yr)	(860)	(1419)	(1290)	(1161)
Net annualized cost (credit) ($/yr)	(807)	300	(191)	(631)
Controlled emissions (metric tons/yr.)	2.0	3.3	3.0	2.7
Cost (credit) per Kg controlled	(0.404)	0.091	(0.064)	(0.234)
II. Model Existing Facilities				
Installed capital ($)	700[1]	10,300[2]	6500[3]	9000[4,5]
Direct operating cost ($/yr)	10	451	259	100
Capital charges ($/yr)	51	1,765	1115	1372
Solvent cost (credit) ($/yr)	(860)	(1419)	(1290)	(1161)
Net annualized cost (credit) ($/yr)	(799)	797	84	311
Controlled emissions (metric tons/yr.)	2.0	3.3	3.0	2.7
Cost (credit), $ per Kg controlled	(0.40)	0.242	0.028	0.115

(1) Reference 7
(2) Reference 1
(3) Reference 1
(4) References 7 and 3.

Table 4-5. CONTROL COSTS FOR SMALL OPEN TOP VAPOR DEGREASER
(Vapor to Air Area of 0.8 m^2)

Control Technique	Manual Cover	Carbon Adsorption	Refrigerated Chiller	Extended Freeboard and Manual Cover
I. Model New Facilities				
Installed capital ($)	230[1]	7400[2]	2700[3]	430[4]
Direct operating costs ($/yr)	9	404	158	17
Capital charges ($/yr)	40	1268	463	74
Solvent cost (credit) ($/yr)	(430)	(710)	(645)	(581)
Net annualized cost (credit) ($/yr)	(381)	962	(24)	(490)
Controlled emissions (metric tons/yr.)	1.0	1.65	1.5	1.35
Cost (credit), $ per Kg controlled	(0.381)	0.583	(0.016)	(0.363)
II. Model Existing Facilities				
Installed capital ($)	270[1]	10,300[2]	4030[3]	570[4]
Direct operating costs ($/yr)	9	404	158	17
Capital charges ($/yr)	46	1,765	691	98
Solvent cost (credit) ($/yr)	(430)	(710)	(645)	(581)
Net annualized cost (credit) ($/yr)	(375)	1,459	204	(466)
Controlled emissions (metric tons/yr.)	1.0	1.65	1.5	1.35
Cost (credit), $ per Kg controlled	(0.375)	0.884	0.136	(0.345)

(1) Reference 7.
(2) Reference 1
(3) Reference 1
(4) References 7 and 8.

With regard to Tables 4-4 and 4-5, the installed capital for the carbon adsorber in the existing facility represents the worst retrofit situation to be encountered for this control device. This would occur if no steam capacity is available for solvent desorption, and space is limited. Retrofit capital would include a small steam boiler and an elevated platform to provide space. For most retrofit situations, the installed capital would be somewhere between the costs for a new facility and the estimates shown for the existing facilities.

The retrofit factor for carbon adsorbers applied to existing degreasers was developed from an actual facility.[6] The cost of the carbon adsorber for the facility was $13,990; the boiler, $4,000; and the platform above ground level in the plant to house both the boiler and the adsorber, $3,300. The ratio of the boiler and platform costs to the carbon adsorber costs is approximately 0.50.

The retrofit factor for the refrigerated chillers is also approximately 50 percent, or in other words, retrofit costs are 50 percent more for existing degreasers than for new units. The basis for this is the study cited earlier (see reference 1).

Retrofit costs for freeboard extensions, or high freeboards, and covers are difficult to determine in some situations. Based on contacts with two manufacturers of these devices, approximate installation requirements are 10 man-hours for manual covers,[7] 16 man-hours for freeboards, and 16 man-hours for powered covers.[8]

The installed capital in Table 4-4 for the powered cover with extended freeboard in an existing facility includes $5,500[9] for digging a concrete pit. The purpose of the pit is to allow room for a hoist or a conveyor

bringing parts to the cleaner. Such a problem most likely would not exist for small degreasers. Consequently, a provision for this type of retrofit penalty is provided in Table 4-4 but not in Table 4-5.

Another difference to be noted in capital costs for the powered cover-extended freeboard design is that the powered cover is required only for this degreaser with working area in excess of 1.0 m^2. Otherwise, the degreaser would be required to install only a manual cover. Note the difference in capital between the manual cover-extended freeboard design in Table 4-5 and the powered cover design in Table 4-4 for new facilities.

In both Tables 4-4 and 4-5, the costs of hydrocarbon control per kilogram of recovered solvent are reported. These values will be used to develop the cost-effectiveness curves later in this chapter. As these tables indicate, the costs of hydrocarbon control vary considerably depending upon the size of the degreaser, the type of control, and the amount of recovered solvent. As an illustration, carbon adsorber costs range from $0.091 per kilogram (Table 4-4) in a new facility for the typical degreaser to $0.583 per kilogram (Table 4-5) for the small degreaser. This is an indication that carbon adsorbers should be much less expensive for larger open top vapor degreasers. Conversely, the extended freeboard and manual cover combination is less expensive for the smaller degreasers than the similar combination with the powered cover on larger degreasers. This conclusion is shown by the difference in savings between $0.234 per kilogram for the typical degreaser in a new facility (Table 4-4) and $0.363 per kilogram for the small degreaser (Table 4-5).

4.3.3 Cost-Effectiveness

The purpose of this section is to provide a graphical analysis of the cost-effectiveness of alternative control options for various types of open top vapor degreasers. This analysis will attempt to relate the annualized cost per kilogram of hydrocarbon removal with degreaser size for each control option.

Figure 4-1 is a presentation of the typical relationship for control of hydrocarbon emissions from open top vapor degreasers. Curves are shown for carbon adsorbers, refrigerated chillers, powered covers with extended freeboards, and manual covers. The size range shown in Figure 4-1 represents the approximate range of most degreasers (0.8 square meters to 18 square meters) based on EPA data, contractor studies, and contacts with degreaser manufacturers. The efficiencies of the control devices shown represent the capability of the control device for reducing emissions from a well maintained degreaser (which has carried out all good housekeeping practices). Although detailed costs are presented for two model degreasers in Section 4.3, several more estimates were derived in order to define the curves with reasonable precision.

The curves represent the retrofit costs for existing facilities. However, this constraint was somewhat relaxed for the powered cover option which does not include the cost of the concrete pit shown in Table 4-4. The reason for this is that the powered cover option with a lower control efficiency may be an acceptable option in those situations where the concrete pit is not necessary. On the other hand, if the pit were required, then the refrigerated chiller with a higher control efficiency (45 percent) becomes more attractive.

Figure 4-1. Cost-Effectiveness of Alternative Control Options for Existing Open Top Vapor Degreasers

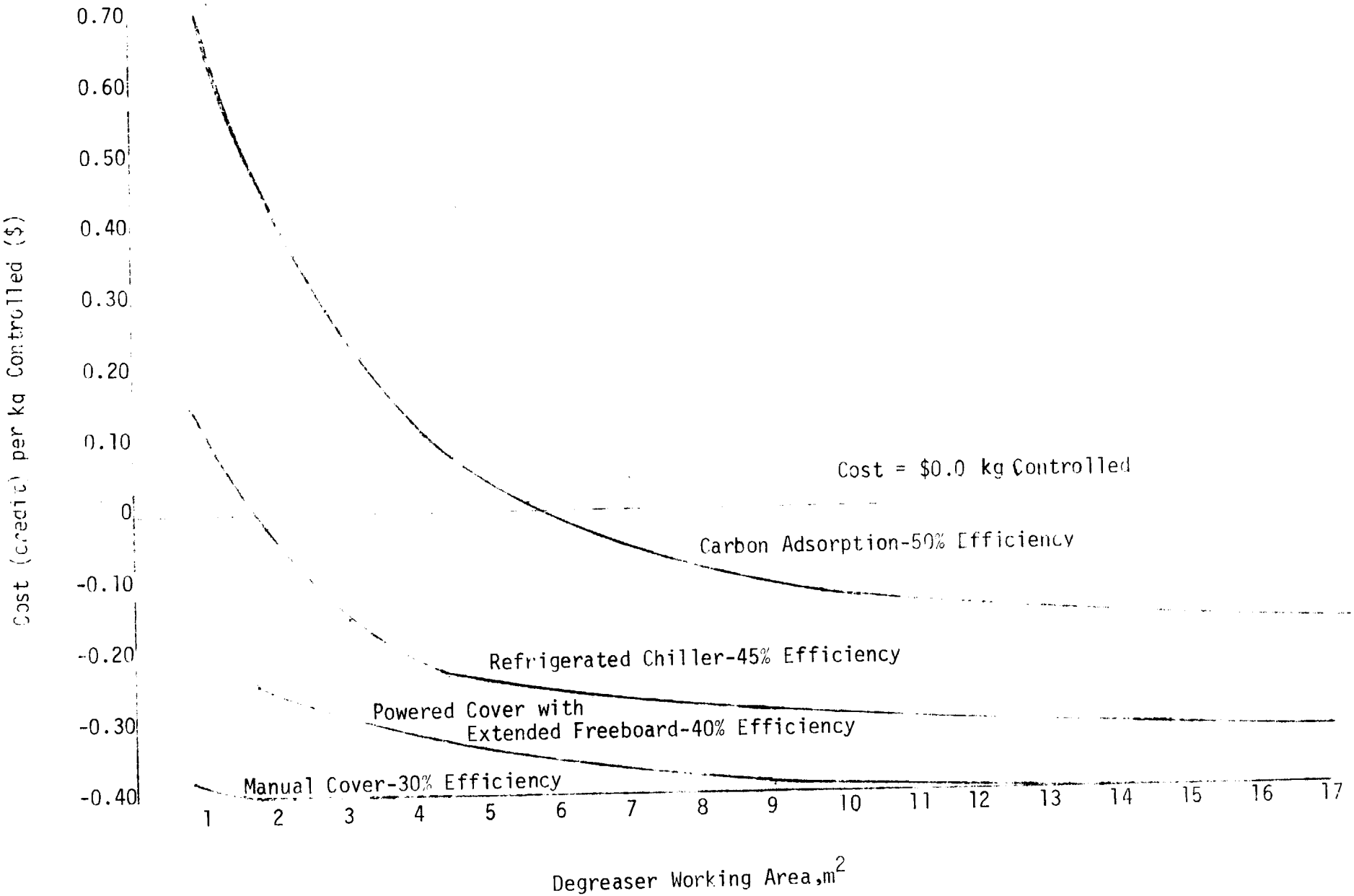

For example, Table 4-4 shows for the degreaser with 1.67 square meters a cost of $0.028 per kilogram for the chiller and $0.115 for the powered cover with the concrete pit.

An important concept for control of degreaser emissions is the fact that credits for recovered solvent offset to some extent the annualized costs of installing, operating, and maintaining a control device. In reviewing Figure 4-1, the reader will observe the extent to which solvent credits can more than offset the annualized costs of the control device. This is graphically illustrated by the horizontal dashed line of $0. per kilogram. This dashed line indicates that application of carbon adsorbers will result in an out-of-the-pocket expense to the operator of the degreaser for a size below an approximate 6 square meters in working area. Similarly, refrigerated chillers will do the same for degreasers smaller than approximately 2 square meters.

4.4 CONVEYORIZED DEGREASERS

4.4.1 Model Plant Parameters

The model plant parameters that were used in developing control costs for conveyorized degreasers are displayed in Table 4-6 for monorail and cross-rod designs. These parameter selections are based on industry contacts and EPA studies of the industry, in the same manner as cold cleaners and open top vapor degreasers. The emission rates in Table 4-6 represent typical values. The working area is used to determine costs for refrigerated chillers. The assumption used to estimate chiller costs is that length of the working area, or interface, is 2.7 times the width. The basis for this is an emission test study performed on a monorail degreaser.[1] The recovered solvent values and the cost of solvent are used to estimate solvent credits which will reduce the annualized control costs of the control devices.

Table 4-6. COST PARAMETERS FOR MODEL CONVEYORIZED DEGREASERS

	Monorail	Cross-Rod
Working Area, m^2	3.9	3.9
Uncontrolled emission rate, metric tons per year	35	14
Emission rate with housekeeping requirements, metric tons per year	26	10.5
Solvent recovered by control system, metric tons per year	13.1	5.25
Solvent cost, $ per kg	0.43	0.43

Source: EPA assumptions based on industry contacts, contractor studies and in-house files.

4.4.2 Control Costs

Costs for control of emissions from conveyorized degreasers have been developed for the following control devices:

1. carbon adsorbers
2. refrigerated chillers.

Table 4-7 presents the costs for the model conveyorized degreasers. Costs are presented in terms of installed capital costs, annualized costs, and the cost per kilogram of hydrocarbon controlled. The installed capital for the carbon adsorber in the existing facility represents the worst retrofit situation to be encountered. This would occur if no steam capacity is available for regeneration of adsorbed solvent and space is limited. Retrofit capital includes a small steam boiler and an elevated platform for the carbon adsorber. The retrofit factor applied to the new source costs for the carbon adsorber is the same as the retrofit factor used for open top vapor degreasers.

Most existing facilities already have steam raising capacity to operate a still to reclaim dirty solvent. These facilities could possibly schedule their steam boiler to desorb the carbon bed during periods when the still is not used. For most retrofit situations, the installed capital would lie somewhere between the costs shown for new and existing facilities.

The figure of $8,550 shown for the existing facility on the monorail degreaser compares reasonably well with a figure of $8,294 (1975 dollars) on an actual facility.[11] The latter would be $9,123 in 1977 dollars based on the use of the Chemical Engineering Plant Index. The retrofit factor used to estimate costs for chillers is the same as the one used for the chillers on open top vapor degreasers.

Table 4-7. CONTROL COSTS FOR TYPICAL CONVEYORIZED DEGREASERS
(Vapor to Air Vapor Area of 3.8 m^2)

Control Technique	Monorail Degreaser: Carbon Adsorber	Monorail Degreaser: Refrigerated Chiller	Cross-Rod Degreaser: Carbon Adsorber	Cross-Rod Degreaser: Refrigerated Chiller
I. Model New Facilities				
Installed capital ($)	11,800	5,725	11,[illegible]	[illegible]
Direct operating costs ($/yr)	970	430	[illegible]4	[illegible]
Capital charges ($/yr)	2,[illegible]4	[illegible]2	[illegible]24	[illegible]
Solvent cost (credit) ($/yr)	(5,633)	(5,633)	([illegible])	[illegible]
Annualized cost (credit) ($/yr)	(2,639)	(4,221)	[illegible]	[illegible]
Controlled emissions (metric tons/yr.)	13.1	13.1	5.25	5.25
Cost (credit), $ per Kg controlled	(0.201)	([illegible])	[illegible]	[illegible]
II. Model Existing Facilities				
Installed capital ($)	17,600	[illegible]	17,[illegible]	[illegible]
Direct operating costs ($/yr)	970	430	[illegible]54	[illegible]
Capital charges ($/yr)	3,[illegible]	1,465	[illegible]	[illegible]
Solvent cost (credit) ($/yr)	(5,633)	(5,633)	(2,[illegible])	[illegible]
Annualized cost (credit) ($/yr)	(1,635)	(3,734)	[illegible]	[illegible]
Controlled emissions (metric tons/yr)	13.1	13.1	[illegible]	[illegible]
Cost (credit), $ per Kg controlled	(0.125)	(0.[illegible]5)	[illegible]	[illegible]

Source: Reference 1 for estimates of capital and annualized costs.

The cost of hydrocarbon control per kilogram shown in Table 4-7 for the carbon adsorber on a new facility costs $0.10 per kilogram for the cross-rod degreaser. On the other hand, the application of a carbon adsorber results in a saving of $0.201 for the monorail degreaser. On the retrofitted facility, the application of the carbon adsorber costs $0.289 per kilogram for the cross-rod degreaser but results in a savings of $0.125 for the monorail degreaser. It must be noted that the difference in cost for the two degreaser models is sensitive to the emission rate and potential solvent recovered because the annualized costs of installing and operating a carbon adsorber are assumed to remain approximately the same in both cases. This is an important consideration in the impact of control upon the owner of the degreasers.

The refrigerated chiller appears to be inexpensive to the user regardless of the type of degreaser and the degree of retrofit. This is demonstrated by the savings shown for all cases in Table 4-7.

4.4.3 Cost-Effectiveness

This section provides a graphical analysis of the cost-effectiveness for alternative control options on conveyorized degreasers. This analysis will relate the annualized cost per kilogram of hydrocarbon control to degreaser size for each control option.

Figure 4-2 shows a relationship of cost versus size for carbon adsorbers and refrigerated chillers on monorail degreasers. The assumptions regarding the size range and control efficiencies are similar to those outlined for open top degreasers. The size range of most monorail degreasers is 1.9 to 18 square meters. As shown in Figure 4-2, the application of carbon adsorption results in an out-of-the-pocket expense for degreasers smaller than approximatel 2 square meters in working area. By the same token, carbon adsorbers can

Figure 4-2. Cost-effectiveness of Alternative Control Options for Existing Monorail Degreasers

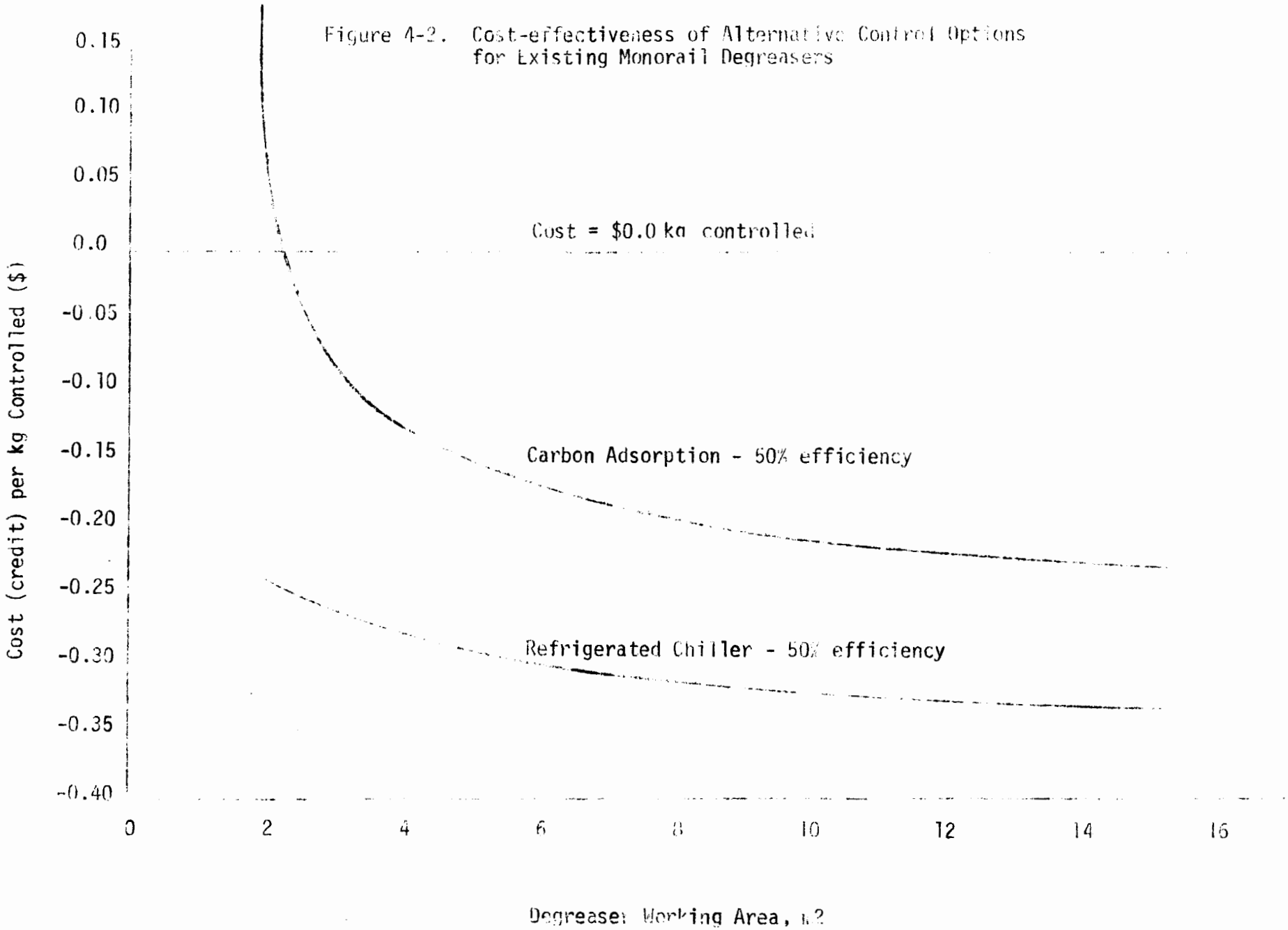

be quite cost-effective for degreasers with large air to vapor working areas.

Figure 4-3 shows a similar relationship for cross-rod degreasers. There are two important differences between Figure 4-3 and Figure 4-2 for the monorail degreasers. First, the size range is narrower for the cross-rod degreasers. The range for most cross-rod degreasers is 1.9 square meters to 4.8 square meters. For monorail degreasers the range is 1.9 to 18 square meters. Second, controls are generally more expensive for cross-rod degreasers than for monorail degreasers. In particular,the cost of carbon adsorption appears to be more than offsetting solvent credits along the entire size range. This is shown by the position of the carbon adsorption curve in relation to the horizontal line of $0. per kilogram control in Figure 4-3. The information depicted in the two figures for monorail and cross-rod degreasers demonstrates the variation in costs with degreaser design that can be anticipated for conveyorized degreasers.

Figure 4-3. Cost-effectiveness of Alternative Control Options for Existing Cross-Rod Degreasers

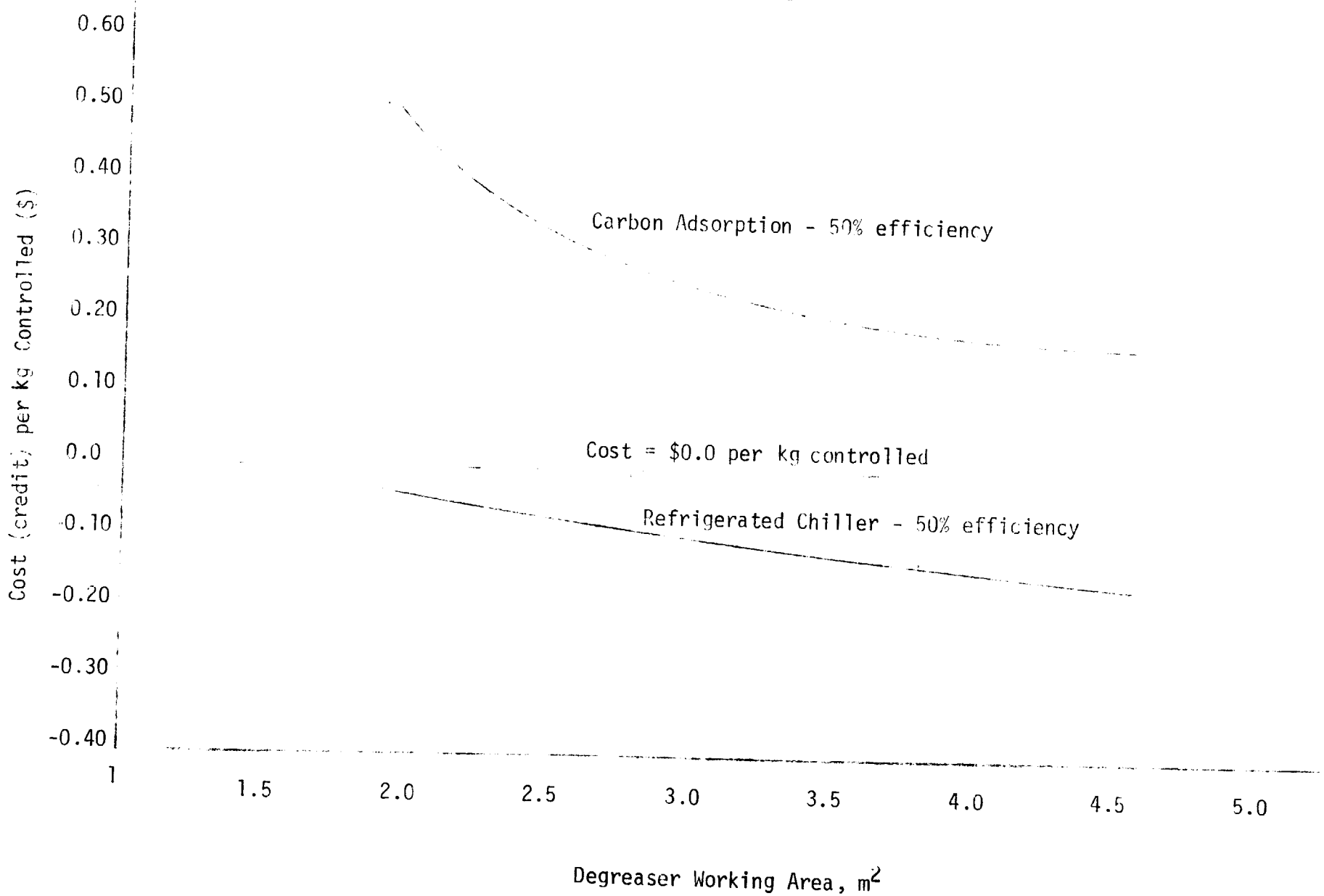

4.6 REFERENCES

1. Surprenant, K.S., and Richards, D.W., "Study to Support New Source Performance Standards for Solvent Metal Cleaning Operations" prepared for the Environmental Protection Agency, Contract No. 68-02-1329, Dow Chemical Company, Midland, Michigan, June 30, 1976.

2. Anon., "Typical Electric Bills 1976," Federal Power Commission.

3. Chemical Marketing Reporter, Schnell Publishing Co., March 7, 1977.

4. Private communication, Frank L. Bunyard, OAQPS, Environmental Protection Agency, to Jerry Shields, Manager of Marketing, Graymills, Chicago, August, 1976.

5. Private communication, Frank L. Bunyard, OAQPS, Environmental Protection Agency, to Jerry Shields, Manager of Marketing, Graymills, Chicago, August, 1976.

6. Surprenant and Richards, op. cit., Appendix C-4.

7. Private communication, Frank L. Bunyard, OAQPS, Environmental Protection Agency to Parker Johnson, Vice President of Sales, Baron Blakeslee Corp., Cicero, Illinois, March 16, 1977.

8. Private communication, Frank L. Bunyard, OAQPS, Environmental Protection Agency to Dick Clement, Detrex Chemical, Detroit, Michigan, March 21, 1977..

9. Surprenant and Richards, op. cit., page 4-97.

10. Surprenant and Richards, op. cit., Appendix C-7.

11. Ibid., page 10.

CHAPTER 5. ADVERSE ENVIRONMENTAL EFFECTS OF APPLYING THE TECHNOLOGY

5.1 AIR IMPACTS

No significant adverse air impacts should result from solvent degreasing regulations, although gross negligence with maintenance and operation of control devices could increase emissions in individual cases. Examples are carbon adsorption systems operating with spent or saturated adsorbent, maladjusted refrigeration systems and excessive ventilation rates. Proper maintenance and operation of these controls will eliminate increases and effect significant reductions in emissions.

Improper incineration of waste solvent is another possible area where emissions could increase. If chlorinated waste solvents are incinerated without subsequent gas cleaning, hydrochloric acid, chlorine, phosgene and other potentially harmfully emissions could result. Sophisticated gas cleaning equipment is required to control these emissions.

Boiler emissions may increase due to the steam required to distill waste solvent and regenerate carbon beds, but in general these increases will be insigificant compared to the emission reductions obtained by this equipment.

5.2 WATER IMPACTS

5.2.1 Waste Solvent Disposal

The major potential water pollutants from solvent degreasers are waste

solvents. Waste solvent can enter natural water systems through sewer disposal or as leachate from landfills. Additional air pollution controls are not expected to allow sewer or improper landfill disposal because much of the solvent would eventually evaporate. Thus, water pollution would probably be diminished by additional air pollution control.

5.2.2 Steam Condensate from Carbon Adsorption

The largest impact on water quality resulting from the control of solvent metal cleaning comes from the use of carbon adsorption. Steam used to desorb the solvent is condensed with the solvent and separated by gravity. Water soluble stabilizers* and some solvent will remain with the water and eventually enter the sewer system.

Stabilizers are organic chemicals added in very small quantities to chlorinated solvents to protect them from decomposition. Stabilizers evaporate from the degreaser as does the chlorinated solvent and both are amenable to collection by adsorption. Furthermore, many stabilizers are water miscible and thus will be removed almost completely from the process during steam desorption. Chlorinated solvents are only slightly water miscible but small quantities will remain with the water.

5.2.2.1 Chlorinated Solvent in Steam Condensate -

Solvent discharge into the sewer can typically reach 190 kg (0.13 m^3 or 35 gallons) per year. This assumes solvent at a concentration of 900 ppm in the condensate and a total of about 40,000 gallons per year of steam condensat

---

*Stabilizers may also be referred to as inhibitors or additives. Some stabilizers are normally lost into the water of the degreaser's water separator, but the quantity of this water is negligible compared to that from steam stripped adsorption systems.

In comparison, the reduction in atmospheric emissions from the degreaser by using the carbon adsorber would typically be 14,000 kg (10 m^3 or 2500 gallons) per year. Therefore, in this case potential sewer emissions of solvent (before evaporating) are less than about 1.5 percent of the degreaser emissions prevented by the carbon adsorber. The above estimates are based on two tests which measured the solvent content in waste water from adsorbers used on chlorinated solvents.[1,2]

5.2.2.2. Stabilizers in Steam Condensate -

In addition to chlorinated compounds, steam condensate will contain small amounts of solvent stabilizers. When the condensate is disposed of most of these stabilizers, because of their volatile nature, will eventually evaporate

The highest sewer stabilizer emission would probably occur with 1,1,1-trichloroethane which requires considerable amounts of water soluble stabilizers. Assuming a solvent recovery rate of 10 m^3 per year (2500 gallons per year), 5 percent stabilizers in the 1,1,1-trichloroethane blend and 40 percent of the stabilizer being water soluble, the stabilizer effluent to the sewer would be 0.2 m^3 per year (50 gallons per year). This would be the worst case; however, and it may not be representative of any actual degreasing processes. The captured solvent vapor does not necessarily contain as high a precentage of stabilizers as does the original liquid solvent. For this reason even systems using 1,1,1-trichloroethane may not emit this amount. Furthermore, other major solvents contain less water soluble stabilizers than 1,1,1-trichloroethane; therefore, the average stabilizer emission would be less than 0.2 m^3 per year.

A method for assessing the impact of the stabilizers would be to analyze the toxicity, water solubility, percent composition, volatility, and BOD (relates to the decomposition rate) for each stabilizer. Unfortunately, percent compositions are generally considered trade secrets by solvent

manufacturers. However, a literature search yielded some data which is given in Appendix B 6.2.

After studying the effects of some of the more toxic substances, it was concluded that only diisobutylene and triethylamine, which are used in trichloroethylene, present any significant potential problem with regard to fish toxicity.[3] Two other stabilizers of possible concern are acrylonitrile and epichlorohydrin, although the data on them are not yet conclusive.

If the quantity of stabilizers and solvent dissolved in the steam condensate were found to be significant, then air sparging could dramatically reduce the levels of all these compounds. During sparging it may be advantageous to vent the off-gas back into the adsorber. Thus, atmospheric emission of the sparge off-gas would be controlled. Furthermore, more stabilizer would tend to remain in the recovered solvent. Although sparging appears to be an inexpensive means of treating the waste water, the data thus far have not indicated a significant environmental need.

5.2.3 Effluents from Water Separators

Water separators on vapor degreasers and distillation units collect a small amount of contaminated water. This is generally less than a gallon or two per day per degreaser, and should not create a significant impact on water quality. De-icing of refrigerated control systems which operate below 32°F, will increase this, but probably not enough to create a problem. Steam stripping of still bottoms in distillation units to reduce solvent content will also increase this amount, but again probably not enough to create a problem.

5.3 SOLID WASTE IMPACT

There appears to be no significant solid waste impact resulting from control of solvent degreasers. The quantity of waste solvent would not increase as a result of controls but should decrease because of increased practice of

distillation and incineration.

Carbon used in carbon adsorber beds is discarded periodically. Vendors and users have estimated the life of carbon at up to 30 years but replacement is generally recommended every 10 to 15 years. Assuming there are up to 7,000 degreasers, using 50 kg of carbon each and averaging a 10 percent annual replacement rate, disposal of carbon from adsorbers could reach 35,000 kg annually for the nation. This amount would never be realized, however, because spent carbon can easily be reactivated. Most major activated carbon manufacturers are equipped for this task.

5.4 ENERGY IMPACT

Carbon adsorbers, refrigerated chillers and distillation units are the principal energy consuming control devices used for controlling degreasing emissions.

A carbon adsorber consumes the greatest amount of energy because of steam required for desorption; however, this energy expenditure is far less than the energy required to manufacture replacement solvent. A typical carbon adsorption system on a degreaser may consume 35 kw (120,000 Btu per hour) of energy and recover 7 kg per hour (15 pounds per hour) of solvent. This energy consumption estimate is based on the following assumptions: 4 kw per kg solvent for steam production, 3 to 12 kw (10,000 to 40,000 Btu per hour) for fan power. A carbon adsorber may typically increase the energy consumption of a vapor degreasing system by 20 percent.[4]

A typical refrigerated freeboard chiller may increase a degreaser's energy consumption by 5 percent. The chiller would consume 0.7 to 2.2 kw (2500 to 7500 Btu per hour) if it ran at 100 percent output. The above values are derived from assuming an average of 1 to 3 horsepower for compressor ratings. A chiller

may reduce emissions by about 1.5 kg per hour (3 lbs per hour) on a typical open top vapor degreaser having a 1.7 m^2 (18 square feet) opening. Thus, roughly 0.5 kw · hr may be spent to save 1.5 kg of solvent.[5]

Solvent distillation requires about 0.1 to 0.2 kw hr/kg of recovered solvent (150 to 300 Btu/pound). Assuming a steam cost of 0.78 cents/kw·hr (2.30 $\$/10^6$ Btu), then the energy costs 0.08 to 0.15 ¢/kg of distilled solvent (0.035 to 0.07 ¢/lb). Considering that chlorinated solvent costs about 45 ¢/kg (20 ¢/lb), the cost of the distillation energy appears to be an insignificant expenditure.[6]

Other vapor control devices are the powered cover and powered hoist. Their energy consumption is insigificant because the electric motors are small and are used only for short durations.

The energy value of the solvent saved is much greater than the energy expended to conserve the solvent. The energy value of the solvent is composed of the solvent manufacturing process energy plus the heat of combustion lost when the processed petroleum feedstock is not used as fuel, plus other energy consumed to replace the lost solvent. The heat value of the feedstock alone is greater than the energy required to recover the solvent. Without doubt control of solvent emissions, by any method, would have a favorable impact on energy consumption.

5.5 OTHER ENVIRONMENTAL CONCERNS

The only other consideration might be blower noise associated with carbon adsorbers. This noise does not affect the environment external to the plant, although it would be noticeable inside the plant near the adsorber. Noise levels have not been measured because they have not appeared significant when compared to the normal noise level in machine shops and other manufacturing areas where

carbon adsorbers are found. While noise does not seem to present a significant environmental problem, it is worthy of consideration when choosing the in-plant location for a carbon adsorber. This problem could be resolved by utilizing existing noise suppression technology.

REFERENCES

1. Scheil, George W., Midwest Research Institute. "Source Test Trichloroethylene Degreaser Adsorber." EPA Project Report No. 76-DEG-1.

2. Scheil, George W. "Test of Industrial Dry Cleaning Operation," EPA Report No. 76-DRY-2.

3. Surprenant, K.S. and Richards, D.W., Dow Chemical. "Study to Support New Source Performance Standards for Solvent Metal Cleaning Operations," Prepared for EPA, Contract No. 68-02-1329, Task Order No. 9.

4. IBID. pg. 7-8.

5. IBID. pg. 7-9.

6. IBID. pg. 7-9.

CHAPTER 6. COMPLIANCE TEST METHODS AND MONITORING TECHNIQUES

It is not expected that emission testing will play a significant part in a compliance program for degreasers. This results from the difficulty in measuring emissions and in enforcing emission standards, as discussed in Chapter 7. Instead, equipment and operating practice standards appear to be more realistic options. In these, compliance relies principally upon observation to determine if control equipment is designed and functioning properly and to ensure that operating practices, as observed under normal conditions, are being properly followed.

Although the compliance emphasis should be on equipment and operating practice standards, the emission rate of a degreaser system may be useful supplementary information. For example, if emissions are greater than average for a system of a certain size, it is an indication that the system is inadequately or improperly controlled. Emission rates can be estimated roughly with an analysis of solvent purchase and inventory records and more accurately with a material balance test.

Other emission tests that could be useful in compliance programs are tests for leaks and tests of carbon adsorption off gas streams. The costs of these tests will often be offset by solvent savings from reduced emissions. An investigator with some familiarity with degreasers and carbon adsorption systems can frequently identify defective systems with a brief inspection and,

thus, avoid the expense of emission testing.

6.1 OBSERVATION OF CONTROL EQUIPMENT AND OPERATING PRACTICES

If the degreasing regulation specifies equipment and operating standards, the compliance test is basically one of visual observation. The observation control equipment and operating practices mainly involves checking through a list of requirements; however, a basic understanding of degreasing systems is necessary. The details to observe are described in Sections 3.1 and 3.2 of this report.

6.2 MATERIAL BALANCE

A material balance test seeks to quantify the amount of solvent input into a degreaser over a sufficiently long time period so that an average emission rate can be calculated. The major advantages of the material balance method are: (1) the total system is checked, (2) the test is simple and does not require expensive, complicated test equipment, and (3) records are usually kept of solvent use, and generally all solvent added is make-up for solvent emitted.

The disadvantage of the material balance method is that it is time consuming. Because many degreasers are operated intermittently and because there is inaccuracy in determining liquid levels, an extended test time is needed to ensure that calculated emission rates are true averages.

In order to perform a material balance test, the following general procedure should be followed:

1. Fill the solvent sump (or bath) to a marked level.

2. Begin normal operation of the degreaser, recording the quantity of make-up solvent and hours of operation.

3. Conduct the test for about four weeks, or until the solvent loss is great enough to minimize the error in measurement.

4. Refill the solvent sump to the original, marked level, recording the volume of solvent added. The total volume of solvent added during the test period approximately equals the solvent emitted.

Although a highly accurate material balance is not usually necessary, the following modifications will improve the accuracy of the test.

1. Clean the degreaser sump before testing.

2. Record the amount of solvent added to the tank with a flow meter.

3. Record the weight and type of work load degreased each day.

4. At the end of the test run, pump out the used solvent and measure the amount with a flow meter. Also, approximate the volume of metal chips and other material remaining in the emptied sump, if significant.

5. Bottle a sample of the used solvent and analyze it to find the percent that is oil and other contaminants. The oil and solvent proportions can be estimated by weighing samples of used solvent before and after boiling off the solvent. Calculate the volume of oils in the used solvent. The volume of solvent displaced by this oil along with the volume of make-up solvent added during operations is equal to the solvent emission.

Proper maintenance and adjustment should be performed on the degreaser and control system before the test period.

6.3 OTHER EMISSION TESTS

An emission measurement test on the off-gas stream from a carbon adsorber may occasionally be necessary. However, this has value only in evaluating the adsorption efficiency not the control efficiency of the system. This test will give no indication of the effectiveness of the adsorber's collection

system; neither will it guantify emissions from waste solvent evaporation, leakage losses, carry-out or sump evaporation.

The better sampling systems for organic solvents use gas chromatography (GC). Techniques for using GC are discussed in EPA-450/2-76-028, "Control of Volatile Organic Emissions from Stationary Sources. Volume 1: Control Methods for Surface Coating Operations." A specific method for perchloroethylene is also detailed as EPA Method 23: "Determination of Total Non-Methane Hydrocarbons as Perchloroethylene from Stationary Sources." Finally, a method for another chlorinated hydrocarbon is EPA Method 106: "Determination of Vinyl Chloride from Stationary Sources." For stack measurments, velocity and flow rate can be determined using EPA Methods 1 and 2.

One EPA emission test measured carbon adsorber inlet and outlet concentrations both with a flame ionization detector and with a gas chromatograph, using integrated gas-bag samples. The methodology and test results are detailed in EPA Project Report No. 76-DEG-1.

Useful tools in locating leaks and other points of emission are the halide torch and the Drager tube. The halide torch is useful as a locating device that will detect sources of halogenated hydrocarbon vapors. The Drager tube will quantify the vapor concentration in ppm and is useful in survey work. These should be useful and relatively inexpensive means to locate sources and quantify by magnitude the hydrocarbon loss. They would allow a maintenance check of control equipment operation and prevent inadvertent losses.

CHAPTER 7. ENFORCEMENT ASPECTS

Emission standards are generally not practical to enforce for solvent degreasing for three reasons: (1) there is an extremely large number of solvent degreasers, (2) emission tests are time consuming, and (3) there are complexities in specifying acceptable emission rates. In order to avoid use of emission standards and to provide quick, inexpensive compliance testing, equipment and operational standards are recommended.

Even though visual inspection is relatively quick and inexpensive, it can not easily determine whether or not the equipment and operation is in compliance. For example, on cold cleaners it must be determined whether or not it is practical to install an internal drainage facility. Also, for highly volatile solvents in cold cleaners, one must decide whether or not the cover can be classified as easily operable. Another example is in deciding what is significant liquid carry-out. Even though Chapters 3 and 6 give background on making decisions for visual inspection, the inspector still needs an adequate background knowledge of degreasing operations to deal with some of the less definite aspects of enforcement.

Because most emission controls serve to reduce the emissions inside the plant, it is reasonable to consider combining enforcement by OSHA and EPA for control of solvent degreasers. The possibilities of a cooperative enforcement program with OSHA and EPA are being explored.

7.1 REGULATORY APPROACHES

There are four types of regulations which can be considered for solvent metal cleaning: (1) emission standards, (2) equipment specification standards, (3) operational requirement standards, and (4) solvent exemption standards. Equipment and operational standards appear to be superior to either emission standards or solvent exemption standards. Each of these approaches is discussed in the following sections.

7.1.1 Emission Standards

Emission standards require an emission measurement. A material balance is the most accurate measurement method for compliance testing but could require over a month for one test. If solvent consumption records kept by the degreasing operator are accurate and complete, they could satisfy the requirement for a material balance test.

If enforcement were only to determine whether or not degreasing systems are designed properly, then one emission test would be sufficient for each degreaser model. However, adjustment, maintenance, and operation of degreasers varies so greatly that the actual level of emission control cannot be expected to be similar, even for identical degreaser models. Thus, individual degreasers rather than models must be evaluated.

An emission standard may be a simple emission rate or it may be related to another variable, such as work load tonnage, heat input, idling mode emission or uncontrolled emission rate. The three most reasonable alternatives for emission standards are: (1) simple emission rate, (2) emission rate per open area of degreaser and (3) emission rate per work load tonnage. These alternatives are briefly discussed below.

The simple emission rate standard provides a conventional regulation

that is readily understood. However, different values of acceptable emission rates would have to be provided for each type of degreaser. It would also not be reasonable to require the same emission rate for large degreasers as for small degreasers; this would require an emission rate based on the open area of the degreaser.

Although emission rate is related to the area of the air/vapor interface, an important consideration is the amount of work load processed. Thus, possible improvement to an emission standard would be to relate it to the work tonnage, for example, a specified amount of solvent emission could be allowed per ton of work load cleaned. This type of standard would be particularly useful if the work loads were consistent in their surface-to-weight ratio and their tendency to entrain solvent; however, this is rarely the case. For example, degreasing a ton of hollow rivets would result in much greater solvent emissions than would degreasing a ton of cannon balls.

Generally, for an emission standard to apply fairly to all degreasing applications, it must relate to the amount and type of work load. Preferably, the emission standard should also consider the type of degreaser and its size. Even if an emission standard could be devised to satisfy these requirements, it would be difficult to enforce and very burdensome for degreasing operators to have to record quantities and types of parts cleaned.

7.1.2 Equipment Standards

Equipment standards can be easily enforced and fairly applied to the large variety of degreasing applications. Equipment standards would not require the same performance by a degreasing operation with a large work load as that with a small work load.

The equipment requirement must be specific enough to ensure effective control but not so restrictive that it would discourage new control technology.

For example, the high freeboard, refrigerated chiller, and carbon adsorption ventilation rate can be specified to ensure sufficient emission control. The specifications usually represent an engineering judgement by experts in the degreasing fields and could be revised as new test data are collected. Another type of specification for control equipment is the exemption of degreasers that are too small for control equipment to be economically reasonable. Particularly in the case of refrigerated chillers and carbon adsorbers, installation could be too expensive for small degreasers and could even cost more than the degreaser itself, thus, a lower level cut-off of approximately 1 m^2 for open top vapor degreasers is recommended. Because of the continuing developments in emission control for solvent degreasing, provision must be made to approve control systems that do not satisfy the requirements specified in this document but may still be effective. Section 3.2 describes equipment and operational standards that can be formulated.

7.1.3 Operational Standards

As with equipment standards, operational standards can apply to almost all degreasing applications, regardless of their size and type of work load. Operators will play a key role in achieving emission control; however, they will have little incentive to follow complex standards. Thus, the standard must be simple, understandable, and precise. The numerous operational requirements can be more easily remembered by the operator if a permanent, conspicuous label is attached to the degreaser summarizing them. The difficulty of enforcement may be minimized by educating the supervision and the operator to the fact that proper operation and control equipment maintenance will usually provide a net profit from solvent savings.

7.1.4 Solvent Exemption Standards

There is very little flexibility in converting from non-exempt to exempt solvents. A recent EPA notice (42 FR 35314) has suggested that the only materials that should be allowed exemptions are methane, ethane, 1,1,1-trichloroethane, and trichlorotrifluoroethane. This choice is further limited because of differences in solvency, flammability, cost, chemical stability and boiling temperature. In general, the exempt solvent approach to regulating solvent metal cleaning is not recommended, because it does not achieve positive emission reduction. The rationale for this is discussed further in Chapter 1.

7.2 AFFECTED FACILITIES - PRIORITIES

Since there is a wide diversity of solvent degreasers, the definition of facilities affected by degreasing regulations must be accurate. Although all solvent degreasers may be subject to potential regulations, there are an extremely large number of degreasers; thus, those with greater emissions should be given higher priority for enforcement.

7.2.1 Definitions of Affected Facilities

The following defines the three types of solvent degreasers that can be regulated.

1. Cold cleaner: batch loaded, non-boiling solvent degreaser
2. Open top vapor degreaser: batch loaded, boiling solvent degreaser
3. Conveyorized degreaser: continuously loaded, conveyorized solvent degreaser, either boiling or non-boiling.

7.2.2 Priorities of Enforcement

Individual degreasers that yield the greatest emission reduction at reasonable cost should have the highest priority for enforcement. Within

that grouping, priority operations are vapor degreasing and waste solvent disposal from all degreasing operations. The lowest priority is assigned to cold cleaners, especially maintenance type with low volatility solvents, such as those used with automotive repair.

An emission reduction of 5 to 15 tons per year can be achieved by controlling a typical open top vapor degreaser or conveyorized degreaser. In comparison, emissions from individual cold cleaners usually cannot be reduced by more than 0.1 tons per year (see Appendix B). Even though conveyorized degreaser emissions can be reduced more than open top vapor degreasing emissions on the average, regulation of conveyorized degreasers before open top vapor degreasers is not recommended, because conveyorized degreasers emit significantly less solvent than do open top vapor degreasers for an equivalent work load. Thus, it would not be advantageous to encourage degreaser operators to choose open top vapor degreasers in order to avoid regulations on conveyorized degreasers.

Waste solvent is a high priority area for control. Controls could be directed towards solvent users, solvent producers, and/or solvent disposal facilities. It is the responsibility of the solvent user to properly dispose of his waste. Facilities which accept waste solvent must use disposal methods which minimize evaporation. It is recommended that solvent producers label new solvents to indicate regulations on waste disposal. For example, a label could read that waste solvent should not be disposed of so that it can evaporate into the air or pollute the waters. In addition to regulating degreasing waste solvent disposal a more comprehensive enforcement program which would cover disposal of all waste solvent and similar volatile organic materials should be considered.

Although enforcement of regulations on cold cleaners is made difficult by their large numbers, it can be practical when enforcement trips are combined with other purposes, or if there are numerous cold cleaners and other solvent degreasers at a particular plant.

APPENDIX A. TEST RESULTS

APPENDIX A: TEST RESULTS

CONTENTS

		Page
A.1	Test results from Dow Report	A-1
A.2	EPA Cold Cleaner Test Report	A-3

A.1 TEST RESULTS FROM THE DOW REPORT

Under contract to the EPA the Dow Chemical Company tested eleven solvent metal cleaners. Detailed reports of each test are contained in the Appendices to the document: "Study to Support New Source Performance Standards for Solvent Metal Cleaning Operations," prepared under EPA contract no. 68-02-1329 by K. S. Surprenant and D. W. Richards and dated April 30, 1976. A summary of the results is given in Table A-1.

TABLE A-1: TEST RESULTS FROM DOW REPORT

SATISFACTORY CONTROL SYSTEMS

Dow Report* Appendix#	User	Degreaser*	Vapor Area	Solvent	Uncontrolled Emission Rate (gal/unit)	Uncontrolled Emission Rate (lb/ft^2·hr)	Controlled Emission (gal/unit)	Controlled Emission (lb/ft^2·hr)	Controlled Efficiency n%	Control System	Comments
C-5	Pratt Whitney	OTVD	65" x 110" 49.6 ft^2	1,1,1	97.5 gal/wk	0.16	58.4 gal/wk	0.10	40%	Cover-pneumatically powered	Uncovered for 24 hrs/day and 7 day/wk
C-2	Eaton	OTVD	-	Tri. 1,1,1	129 lb/ton 111 lb/ton	- -	99 lb/ton 80 lb/ton	- -	23% 28%	Cover (manual)	No much information on the test.
C-12	Dow Lab	OTVD	24.2"x22" 3.7 ft^2	1,1,1		0.373 0.373 0.373		0.373 0.273 0.167	0 27% 55%	FR = 0.5 = 0.75 = 1.0	Idle (no work loads), moderate draft
			24.2"x22" 3.7 ft^2	1,1,1		0.955 0.955 0.955		- 0.051 0.054	- 46% 43%	FR = 0.5 0.75 1.0	Idle, quiet air
C-3	Hamilton Standard	OTVD (#203)	15 ft^2	Methylene Chloride	7.5 gal opday 6.43 gal/day	0.186	4.53 gal/opday 3.67 gal/day	0.112 .	>40% >43%	Cold Trap FR = 0.83 (covered during disuse)	Work load when CT on was 50% more than when CT off →n> 40%.
		OTVD (O&R)	11.1 ft^2	Methylene Chloride	3.63 gal/opday 2.9 gal/day	0.450	2.60 gal/opday 1.73 gal/day	0.322	28% 40%	Cold Trap FR = 0.75 (never covered)	Inaccurate results. The O&R deg is expected to have a higher n, due to being uncovered. O&R had only 3 work loads per operating day whereas #203 had 28 to 43 wkld/opday.
C-10	Vic	OTVD	12'x4.5' 54 ft^2	Tri.	108 gal/wk	0.605	38 gal/wk	0.213	65%	Carbon adsorption	Ventilation rate of 103 cfm/ft^2. Accuracy of record-keeping is reported by Dow to be poor. Thus, accuracy of results would be poor.
C-7	Schlage Lock	CVD-Monorail	41.3 ft^2	Perc.	19.5 gal/wday	0.79	7.5 gal/wday	0.304	62%	Chiller	Range of n is 45 to 65%.
C-11	W. Electric Hawthorne	CND defluxer	-	Tri.	0.063 gal/ft^2 of circuit board 23.8 gal/wday	-	0.025 gal/ft^2 10.4 gal/wday	-	60%	Carbon adsorption	
UNSATISFACTORY CONTROL SYSTEMS											
C-5	Pratt Whitney	OTVD	56"x90" 35 ft^2	1,1,1	58 gal/wk	0.138	49 gal/wk	0.117	16%	Cold Trap	FR = 59%, Cold Trap design tested here was reported as an obsolete model. Covered during disuse.
C-8	Super Radiator	OTVD	6'x12' 72 ft^2	Perc.	49 gal/day	1.53	37 gal/day	1.14	-8%	Carbon Adsorption	Defective adsorption system - breakthrough; insufficient FR 0.04 ≤FR≤ 0.1. Only 37 cfm/ft^2
C-4	Hewlette Packard	CND Monorail Developer		1,1,1	0.33 gal/board		0.26 gal/board		21%	Carbon Adsorption	Low control efficiency of the adsorption system is thought to be because of poor ventilation design.
C-9	J. L. Thompson	CVD Crossrod		Tri	1.4 gal/hr		1.06 gal/hr		25%	Carbon Adsorption	Material balance results
					50.5 gal/wk		49.5 gal/wk		50%	Carbon Adsorption	Results from purchase records

Abbreviations: OTVD = Open Top Vapor Degreaser, CVD = Conveyorized Vapor Degreaser, CND = Conveyorized Non-boiling Degreaser, Opday = Day degreaser is in operation, wday = working day, CT = Cold Trap, FR = Freeboard Ratio lb/ton = pounds of solvent emitted per ton of parts degreased, WKLD = work load, 1,1,1 = methyl chloroform, Tri. = trichloroethylene, Perc. = perchloroethylene.

*The appendix of the Dow Report describes each test in detail.

A.2 EPA COLD CLEANER TEST REPORT

TEST REPORT

EVAPORATIVE EMISSIONS STUDY ON COLD CLEANERS

By

Walter Pelletier
Peter R. Westlin

U.S. ENVIRONMENTAL PROTECTION AGENCY
Office of Air Quality Planning and Standards
Research Triangle Park, North Carolina 27711
May, 1977

A.2 EPA COLD CLEANER TEST REPORT

TEST REPORT

EVAPORATIVE EMISSIONS STUDY ON COLD CLEANERS

By

Walter Pelletier
Peter R. Westlin

U.S. ENVIRONMENTAL PROTECTION AGENCY
Office of Air Quality Planning and Standards
Research Triangle Park, North Carolina 27711
May, 1977

SUMMARY

A preliminary study of cold cleaner solvent emissions was undertaken, the purposes of which were to quantify hydrocarbon solvent evaporation losses from typical air-agitated, pump-agitated, and unagitated cold cleaners; and to establish relationships between evaporation rates and several controlled test parameters. These parameters included solvent volatility, room draft velocity, freeboard ratio, and cold cleaner operation.

Results of these tests indicate that highly volatile solvents, such as perchloroethylene, used in different types of cold cleaners with different types of solvent agitation produce comparable evaporation rates. Solvents emissions from air-agitated, pump-agitated, and unagitated units showed similar test results with perchloroethylene as the solvent. With less volatile solvents, such as Mineral Spirits, agitated cold cleaners showed significantly greater solvent emissions than did the unagitated. In addition, these test results demonstrate a tendency for solvent emissions to increase as the room draft velocity is increased. Closing the cover on a cold cleaner drastically reduces solvent emissions as is also shown in these tests.

An increase in solvent emissions with a decrease in freeboard ratio in unagitated units is indicated by these test results. Also indicated is an effect on solvent emissions caused by the shape of the solvent-to-air interface area of unagitated tanks. For these tests, a square solvent-to-air interface surface resulted in greater solvent emissions than did a rectangular one. This result may be affected by the orientation of the tank to the room draft air movement.

The effect of solvent volatility on evaporation rates is shown as increased volatility produces increased solvent emissions. The largest difference between solvent emission rates is shown between tests with the highly volatile, relatively pure perchloroethylene and the mineral spirits mixtures.

TABLE OF CONTENTS

Page No.

I. INTRODUCTION 1

II. EQUIPMENT AND SOLVENTS 1

III. TEST PROCEDURES. 2

IV. DISCUSSION OF RESULTS. 5

Appendix A: Test Data. 16

Appendix B: Solvent Analyses 21

I. INTRODUCTION

The Emission Measurement Branch of the Emission Standards and Engineering Division undertook a laboratory study of cold cleaners used for parts degreasing. The purpose of the study was twofold: first, to quantify hydrocarbon solvent evaporation losses from typical air-agitated, pump-agitated, and unagitated cold cleaners; and second, to establish relationships between evaporation rate and several test parameters including solvent volatility, room draft velocity, and free-board ratio.

In this preliminary study, a minimum number of data have been collected. In most cases, each data value represents only one test run, the curves are plotted with only two or three points, and comparisons are made based on only two or three test runs. The results included in this report should be regarded as preliminary and, at best, only indications of trends that can occur with cold cleaner solvent emissions.

The tests were conducted at the IRL laboratory under controlled conditions. Four different cold cleaner models were used for this study: an air-agitated Kleer-Flo model 90 unit, a pump-agitated Gray Mills model 500 cleaner, a Kleer-Flo model A-15 unagitated unit, and a Gray Mills model SL-32 unagitated cleaner. The four different solvents used for these tests were perchloroethylene, 102 mineral spirits, 112 mineral spirits, and 140 mineral spirits.

The results are expressed in milliliters of solvent lost per hour per square meter of surface area (ml/hr . m^2) and in grams of solvent lost per hour per square meter of surface area (g/hr . m^2). These data are used to develop curves displaying the relationships between evaporation rate and the test parameters.

II. EQUIPMENT AND SOLVENTS

A schematic of the Kleer-Flo model 90, an air-agitated cold cleaner, is

shown in Figure 1. The air for agitation was supplied by an industrial compressor, and the rate of air injection was set at a relatively constant 4 to 5 liters per minute with the use of a calibrated orifice meter. Although not used in any calculations, the air injection temperature was monitored with a dial thermometer.

The pump-agitated cold cleaner used in these tests was the Gray Mills model 500 unit. This unit was connected to a timer-switch set to run the pump agitator for 20 minutes out of every 65 minutes in a repeating cycle for all test runs. This was done to avoid over-heating the solvents and to more realistically represent the operation of the cleaner.

Tests of unagitated cold cleaners were performed using two different sized units. One was a Kleer-Flo model A-15 shown in Figure 2. The other cleaner was a Gray Mills model SL-32. Calibrated thermocouples were used to measure solvent temperature and ambient temperature for these test runs as well as for the other test runs.

III. TEST PROCEDURES

The measurements made for each test included solvent volume, room and solvent temperatures, room draft velocity, and solvent density. Temperatures were measured with chromel-alumel thermocouples calibrated at the water-ice point and at water boiling temperature corrected for barometric pressure. Recorders were used to monitor these temperatures over an extended period of time. The temperatures reported in this report represent runs averages that have ranges of about $\pm$ 5°K. Accuracy of the measured values is estimated at $\pm$ 1°K.

Room draft velocity was measured with an Alnor thermo-anemometer held 30 cm above the top of the tank. The measurements are estimated to have a $\pm$ 10 percent accuracy for draft velocities above 30 m/min while below this

Figure 1: Schematic Diagram of
Kleer-Flo Model #90
Cold Cleaner

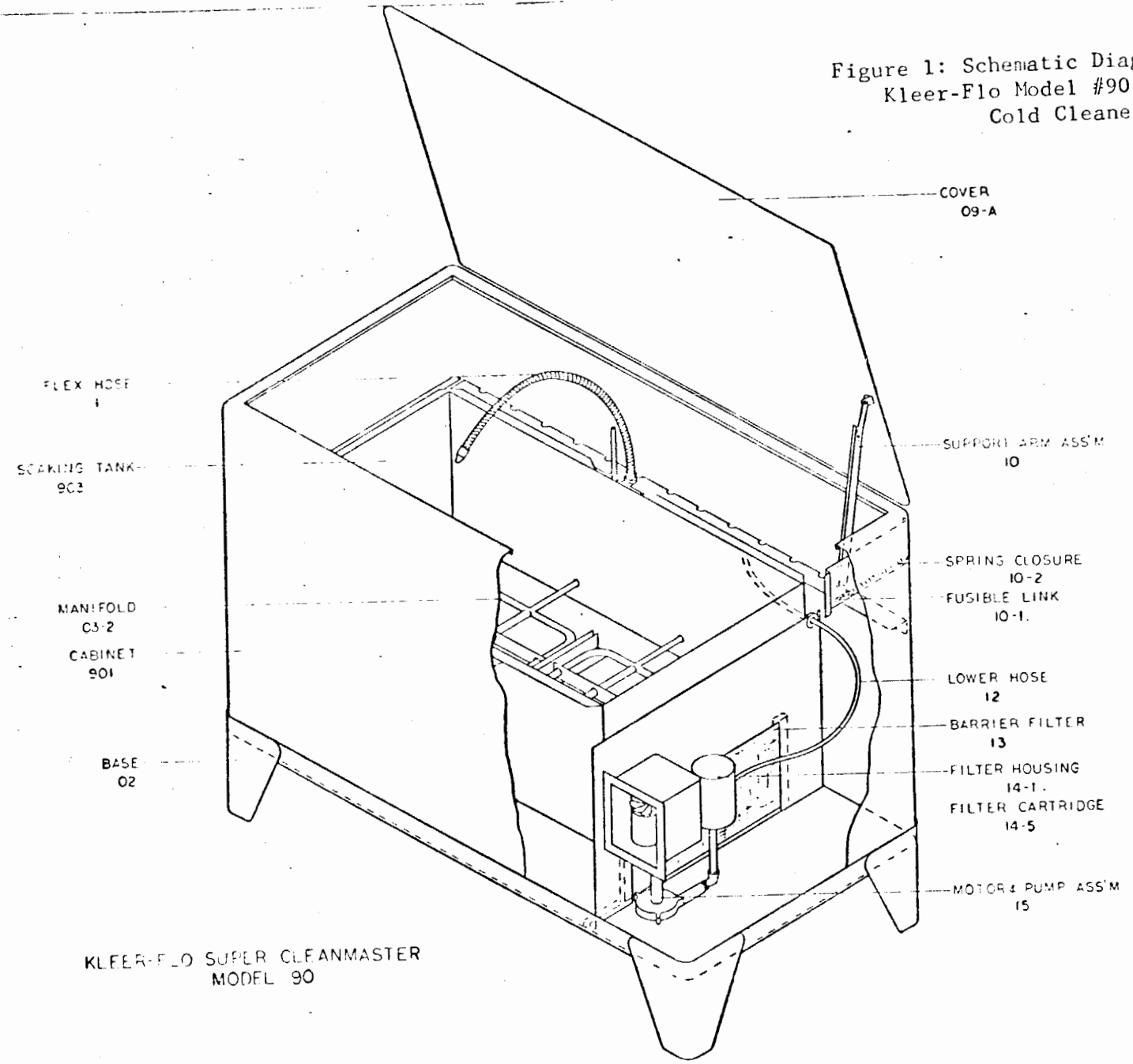

NOT SHOWN

CASTERS 02-2
DRYING SHELF 07
BASKET 08
COVER KNOB 09-2
BRUSH BR-1
BRUSH HOLDER 09-3
WORK SHELVES
RIGHT HAND
LEFT HAND 06
AIR GUN 03-14
AIR HOSE 03-13
AIR VALVE 03-9
MOTOR LOUVRE 04
SWITCH 04-2
INDICATOR LIGHT 04
RESERVIOR COVER 05-

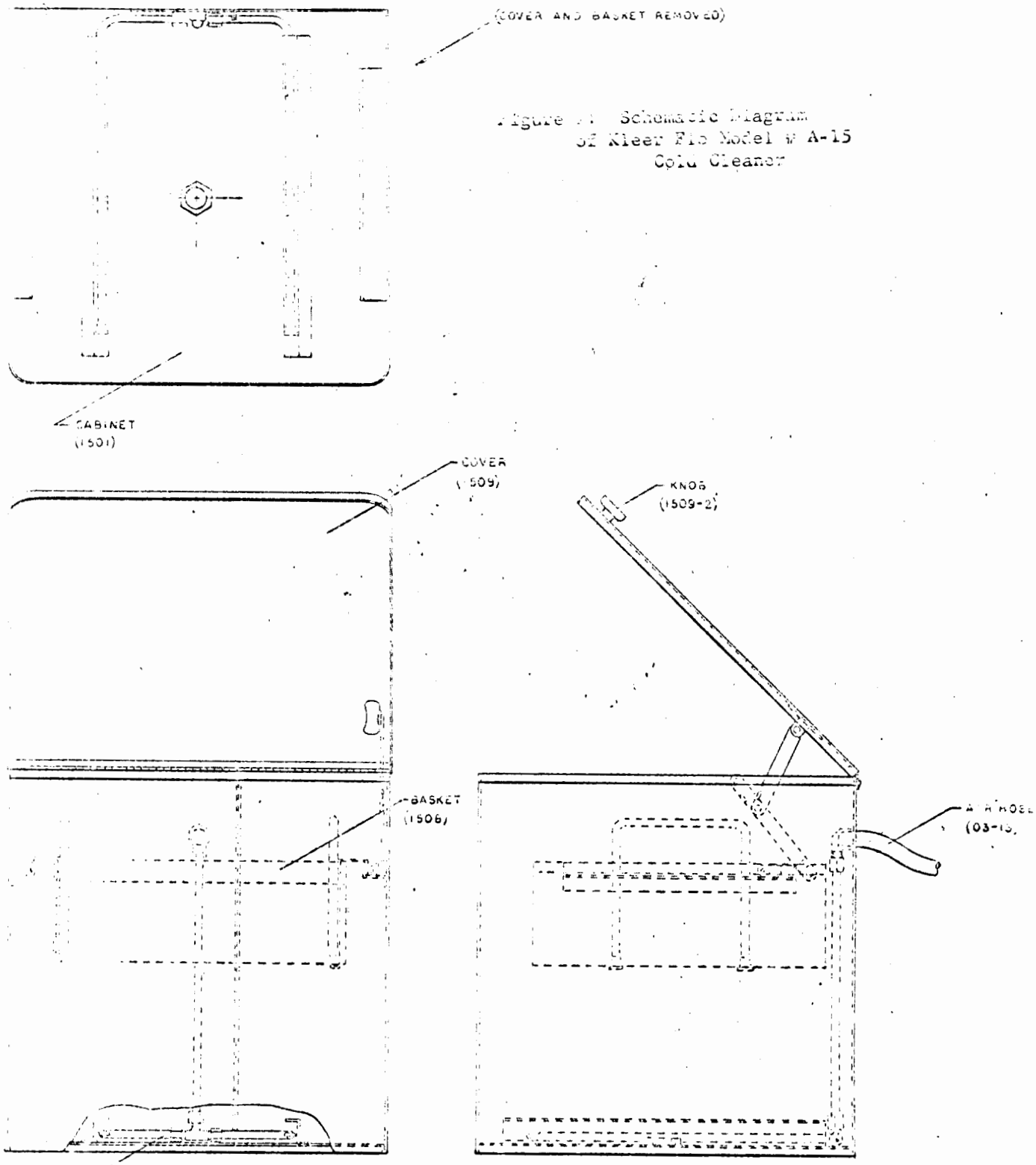

Figure [illegible]: Schematic Diagram of Kleer Flo Model # A-15 Cold Cleaner

MODEL
6-19-73

level, the accuracy falls to about ± 20 percent.

Solvent density was determined gravimetrically before and after each test run. Solvent volumes were measured with calibrated containers. Accuracy of these measurements is estimated to be about ± 2 percent. Samples of solvents were collected for analysis of distillation characteristics and volatility. These data are shown in Appendix B.

Prior to initiation of the test, the cold cleaner units were partially filled with solvent and operated, if applicable, for a short period. This conditioning step filled any reservoirs with solvent. After the cleaner was drained, a measured amount of solvent was placed in the cleaner and the test conditions were set as desired. Draft velocity was maintained with a laboratory-hood exhaust fan and small, caged, portable fans. At the end of the test period, the solvent was drained from the cold cleaner in the same manner as was completed earlier. The volumes were measured with calibrated containers and the volumes were recorded. Test conditions such as solvent temperature, ambient temperature and humidity, and other test parameters were recorded.

IV. DISCUSSION OF RESULTS

Tables 1 and 2 show the results of tests with the air-agitated and pump-agitated cold cleaners, respectively. The test data for the two unagitated units are shown in Tables 3 and 4. Figure 3 shows a plot of the relationship between evaporation rate of perchloroethylene and room draft velocity for these cleaners. The scatter in the results shown on this figure indicates that the type of cold cleaner and the agitation method have little effect on the evaporation rate of a highly volatile solvent such as perchloroethylene. One result that is evident is that the evaporation rate of solvent increases with an increase in room draft velocity for all types of cleaners. The data show that for the air-agitated unit,

TABLE 1. EVAPORATION RATE TEST RESULTS FOR THE AIR-AGITATED COLD CLEANING UNIT

Solvent	Cover Position	Room Draft (m/min)	Evaporation Rate ($ml/hr \cdot m^2$)	Evaporation Rate ($g/hr \cdot m^2$)
Perchloroethylene	Open	27	615	992
Perchloroethylene	Open	85	1758	2848
Perchloroethylene	Closed	83	143	231
113 Mineral Spirits	Open	4	83	65
140 Mineral Spirits	Open	3	34	26
140 Mineral Spirits	Open	22	75	57

TABLE 2. EVAPORATION RATE TEST RESULTS FOR THE PUMP-AGITATED COLD CLEANING UNIT

Solvent		Room Draft (m/min)	Evaporation Rate (ml/hr . m^2)	Evaporation Rate (g/hr . m^2)
Perchloroethylene		64	1167	1891
Perchloroethylene		28	464	751
Perchloroethylene	No Agitation	27	423	677
102 Mineral Spirits		59	244	186
140 Mineral Spirits		3	64	49

TABLE 3. EVAPORATION RATE TEST RESULTS FOR AN UNAGITATED COLD CLEANING UNIT

GRAY MILLS MODEL SL-32
(Dimensions: 81 cm x 41 cm x 25 cm Deep)

$$\left(\text{Freeboard Ratio} = \frac{\text{Freeboard Height}}{41}\right)$$

Solvent	Freeboard Ratio	Room Draft (m/min)	Evaporation Rate (ml/hr . m^2)	Evaporation Rate (g/hr . m^2)
Perchloroethylene	0.27	57	1156	1873
Perchloroethylene	0.50	52	824	1311
Perchloroethylene	0.29	3	56	89
Perchloroethylene	0.50	3	8	12
102 Mineral Spirits	0.50	52	142	109
102 Mineral Spirits	0.29	3	9	7
102 Mineral Spirits	0.50	3	8	6
140 Mineral Spirits	0.29	3	11	8
140 Mineral Spirits	0.50	3	4	3

TABLE 4. EVAPORATION RATE TEST RESULTS FOR AN UNAGITATED COLD CLEANER

KLEER-FLO MODEL A-15
(Dimensions: 33 cm x 33 cm x 32 cm Deep)

$$\left(\text{Freeboard Ratio} = \frac{\text{Freeboard Height}}{33}\right)$$

Solvent	Freeboard Ratio	Room Draft (m/min)	Evaporation Rate (ml/hr . m^2)	Evaporation Rate (g/hr . m^2)
Perchloroethylene	0.20	58	1508	2442
Perchloroethylene	0.42	53	1210	1937
Perchloroethylene	0.20	3	88	141
Perchloroethylene	0.42	3	20	31
Perchloroethylene	0.74	3	27	43
102 Mineral Spirits	0.42	53	159	124
102 Mineral Spirits	0.20	3	26	20
102 Mineral Spirits	0.42	3	27	20
102 Mineral Spirits	0.74	3	24	18
140 Mineral Spirits	0.20	3	9	7
140 Mineral Spirits	0.42	3	11	9
140 Mineral Spirits	0.74	3	11	8

FIGURE 3 GRAPHICAL PLOT OF PERCHLOROETHYLENE VERSUS ROOM DRAFT AIR VELOCITY FOR AIR-AGITATED, PUMP-AGITATED, AND UNAGITATED COLD CLEANERS

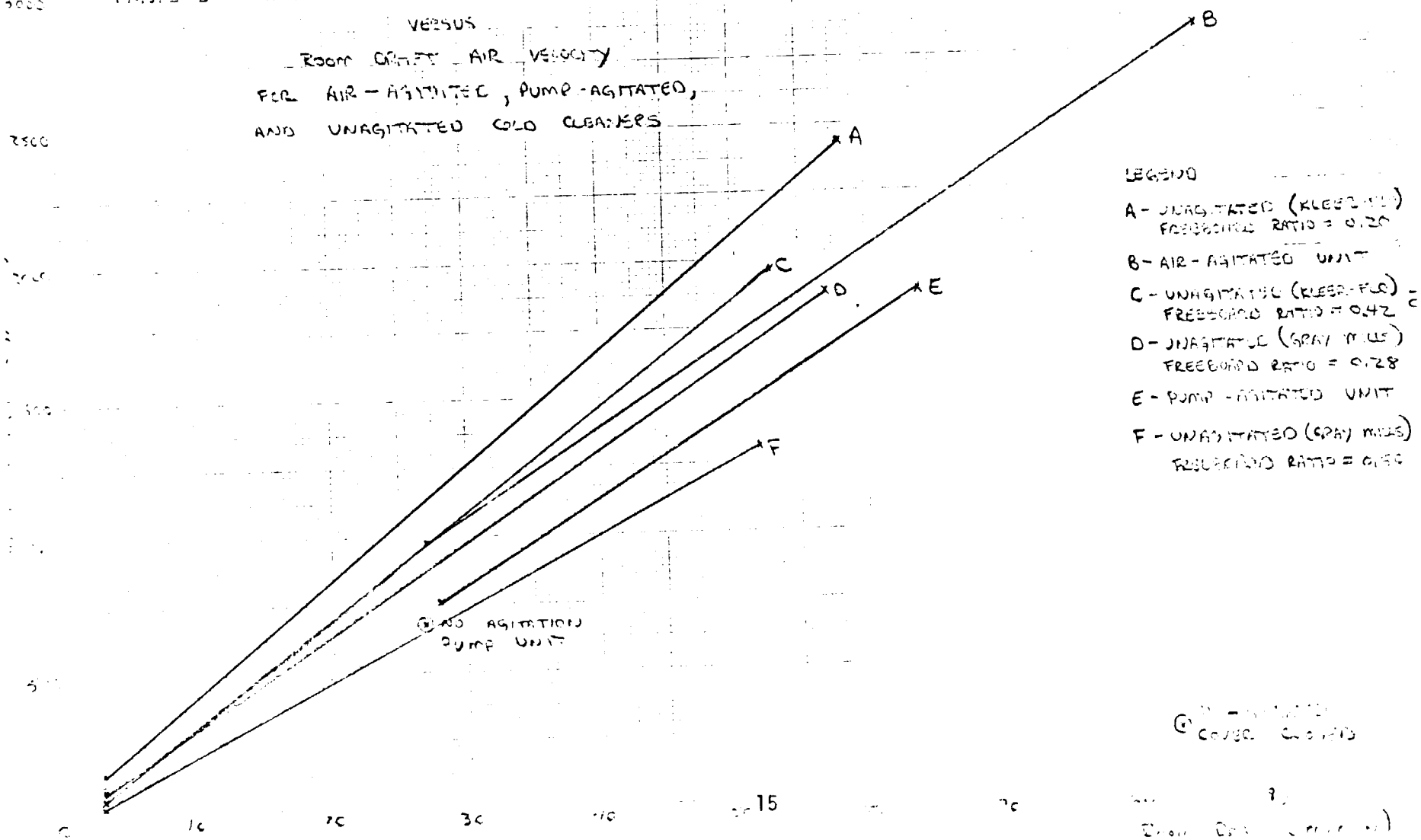

the evaporation rate of perchloroethylene increases from about 1000 g/hr . m^2 at a room draft velocity of 27 m/min to over 2800 g/hr . m^2 at 85 m/min. Tests with the other models showed similar results.

A third test run was made with the perchloroethylene in the air-agitated cold cleaner with the lid closed. At a draft velocity of about 85 m/min, the evaporation rate with the cover open was over 2800 g/hr . m^2, while with the cover closed, the evaporation rate was reduced to about 230 g/hr . m^2. This represents better than a 90 percent reduction in emissions.

Results of tests with less volatile minerals spirits showed somewhat different relationships. At room draft velocities below 5 m/min, the agitated cold cleaners showed significantly greater evaporation rates of mineral spirits than did the unagitated models. For example, under similar test conditions and room draft velocities under 5 m/min, the emissions from the air-agitated cold cleaner were about 25 g/hr . m^2 of 140 mineral spirits, the pump-agitated unit emissions were about 50 g/hr . m^2, while the unagitated unit emissions were less than 10 g/hr . m^2. Data from tests at higher draft velocities are limited, but a similar result can be shown for the evaporation rates of 102 mineral spirits at 50 to 60 m/min draft velocity from the pump-agitated unit and from the two unagitated models.

For these tests freeboard ratio is defined as the height from the surface of the solvent to the top of the tank (freeboard height) divided by the length of the shorter side of the tank. Figure 4 shows the relationship of the evaporation rate of perchloroethylene versus freeboard ratio. The figure demonstrates the tendency for solvent emissions to decrease as the freeboard ratio is increased.

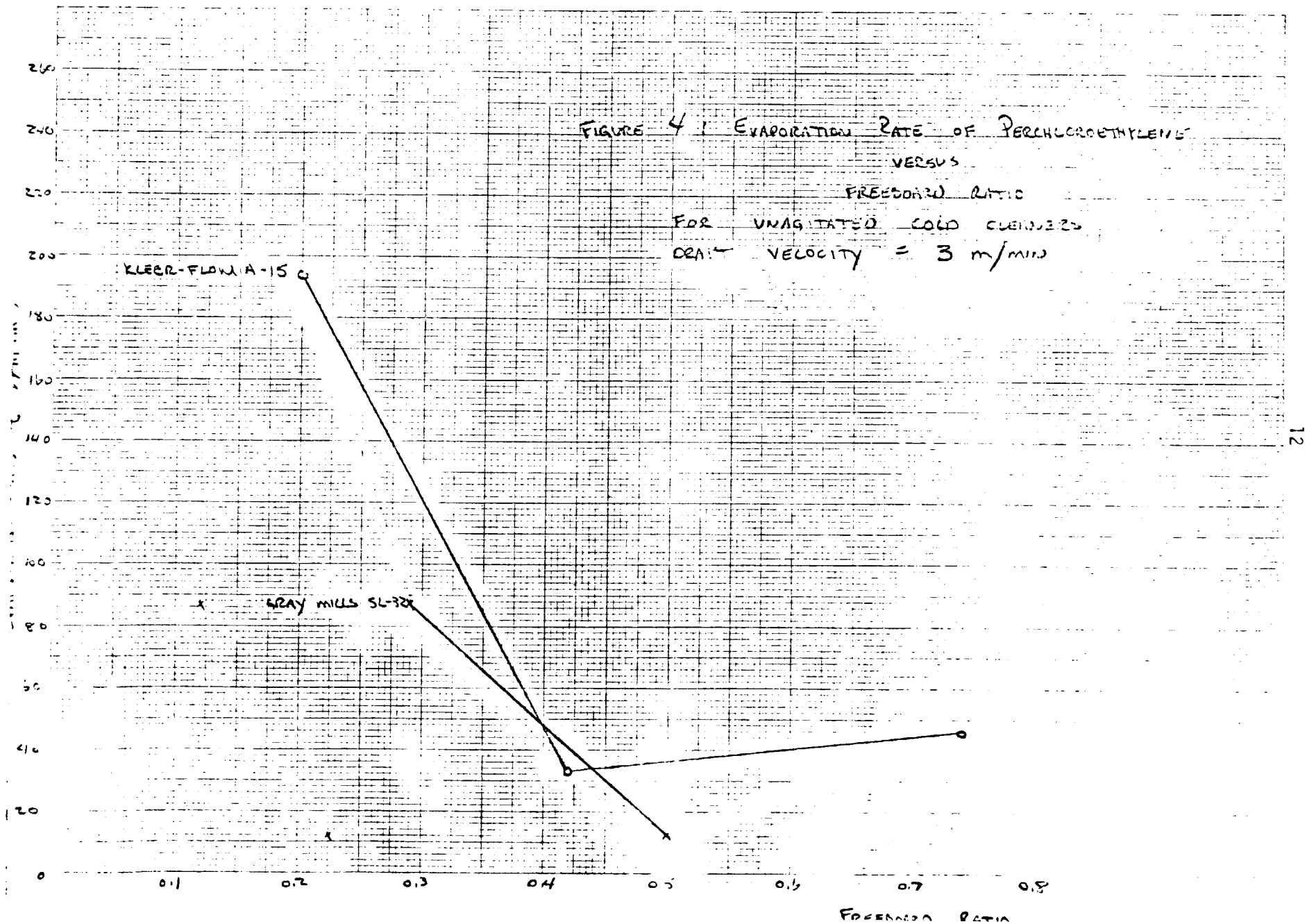

FIGURE 4: EVAPORATION RATE OF PERCHLOROETHYLENE VERSUS FREEBOARD RATIO FOR UNAGITATED COLD CLEANERS DRAFT VELOCITY = 3 m/min

Figure 5 displays the relationship between evaporation rate of various grades of Mineral Spirits solvents and freeboard ratio. Solvent losses for these tests were extremely small and the inherent imprecision in measuring these small differences probably account for the lack of clear trends on this figure. One notable result demonstrated is that the Kleer-Flo A-15 cold cleaner showed greater evaporation losses under the same conditions than did the Gray Mills cold cleaner. This difference may be due to the difference in the shape of the two units. The Kleer-Flo model has a square solvent-to-air interface area, while the Gray Mills unit has a rectangular ($\simeq$ 2:1 length to width ratio) interface area. These data are normalized as to the solvent area, and the conditions under which these data were conducted were identical, so any difference between test results from the two tanks may be because of the shape difference. In addition, the Gray Mills tank was oriented the same way for all tests; that is, the room draft direction was parallel with the short sides of the tank. Turning the tank so that the room draft direction is parallel with the long sides of the tank would likely produce different results.

The effect of solvent volatility, in terms of solvent initial boiling temperature, an evaporation rate is demonstrated in Figure 7. For this figure, an increase in initial boiling temperature corresponds to a decrease in solvent volatility. The slopes of the three curves on Figure 7 indicate that evaporation rates decrease with decreasing solvent volatility. The Kleer-Flo A-15 model cold cleaner was used for these tests. It is not apparent that the square surface shape of this unit had any effect on these results.

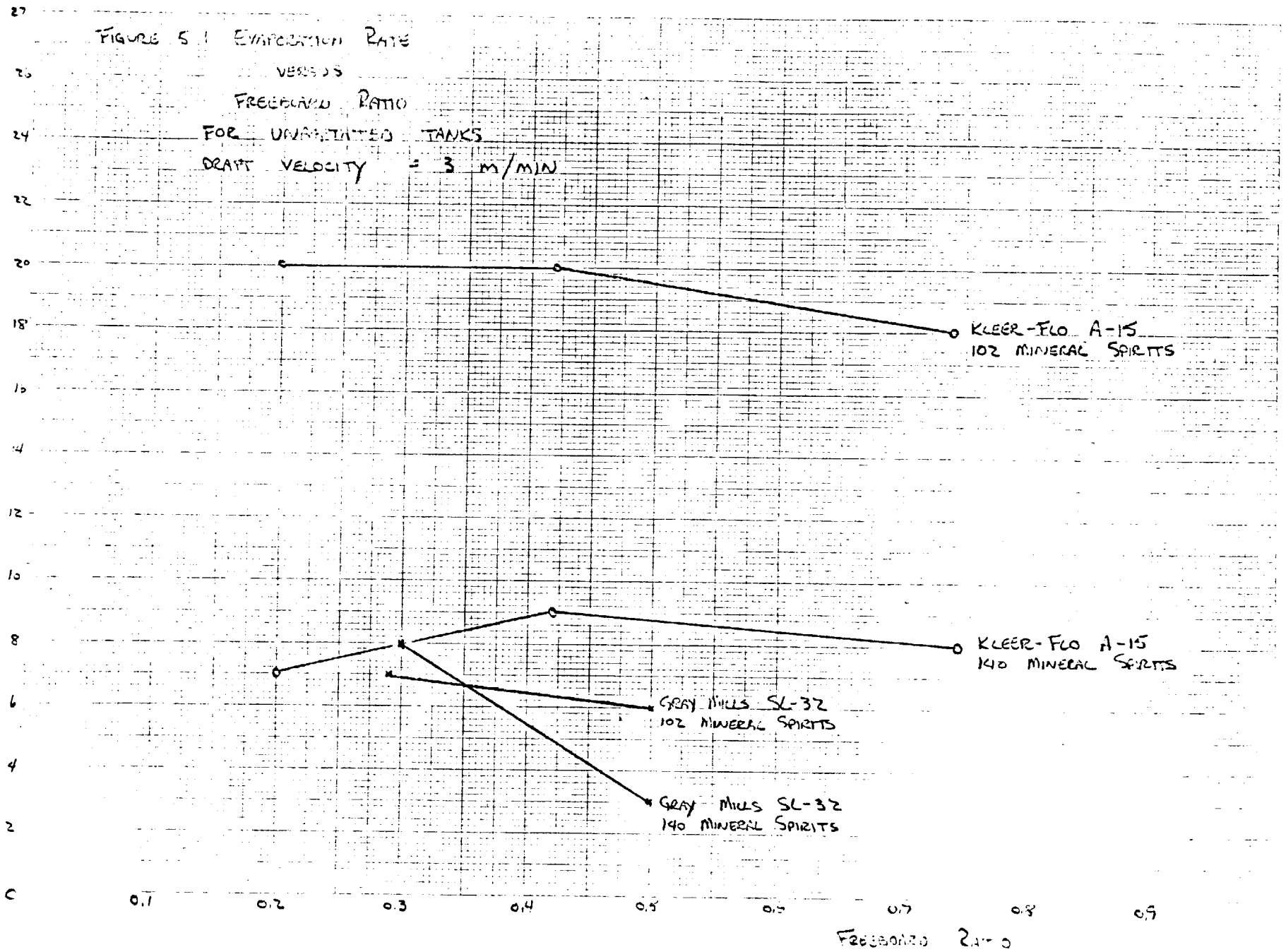

FIGURE 5 : EVAPORATION RATE VERSUS FREEBOARD RATIO FOR UNAGITATED TANKS DRAFT VELOCITY = 3 M/MIN

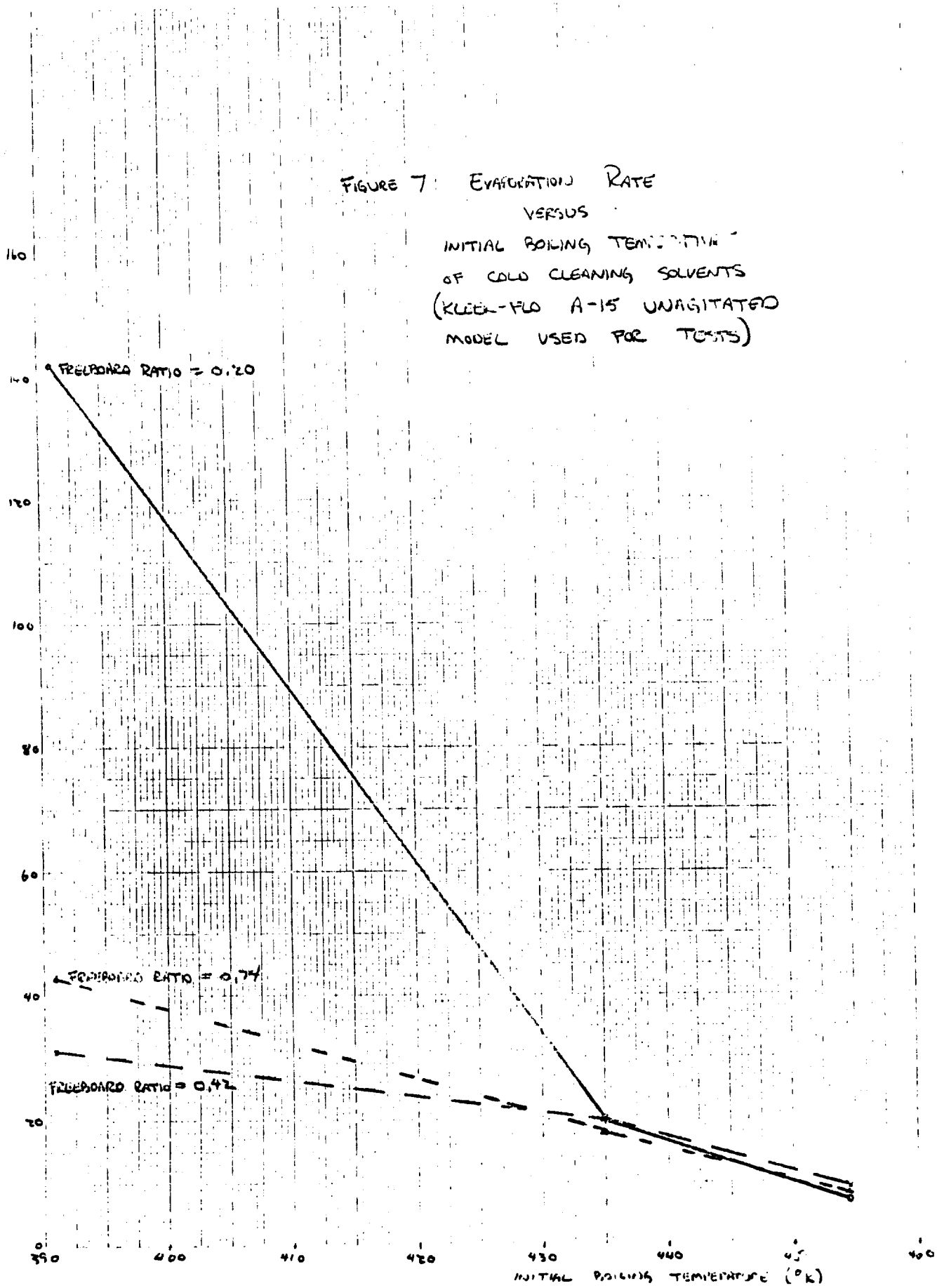

FIGURE 7: EVAPORATION RATE VERSUS INITIAL BOILING TEMPERATURE OF COLD CLEANING SOLVENTS (KLEEN-FLO A-15 UNAGITATED MODEL USED FOR TESTS)

APPENDIX A

TEST DATA

TABLE A. EVAPORATION TEST RESULTS FOR THE KLEER-FLO MODEL 90 AIR-AGITATED COLD CLEANER

(Surface Area of Agitated Section = 0.398 m^2, Total Solvent Surface Area = 0.974 m^2)

Run	Solvent	Ave. Room Temp. (°K)	Ave. Solvent Temp. (°K)	Ave. Injected Air Temp. (°K)	Ave. Injected Air Moisture (%)	Ave. Injected Air Rate (l/min)	Ave. Room Draft (m/min)	Solvent Density (g/ml)	Test Run Time (hrs:min)	Volume Loss (l)	Evaporation Rate (ml/hr . m^2)	Evaporation Rate (g/hr . m^2)
1-A Open	Perchloroethylene	293	291	291	1.6	4.9	27	1.61	19:08	8.34	616	992
2-A Open	Perchloroethylene	290	289	290	0.8	4.0	85	1.62	16:40	28.54	1758	2848
3-A Closed	Perchloroethylene	293	292	292	0.4	4.2	83	1.62	16:16	2.26	143	231
4-A Open	112 Mineral Spirits	293	389	288	1.5	4.4	4	0.78	47:19	3.81	83	65
5-A Open	140 Mineral Spirits	293	293	291	1.7	4.8	3	0.77	89:53	3.00	34	26
6-A Open	140 Mineral Spirits	295	295	293	1.5	5.0	22	0.77	74:25	5.41	75	57

TABLE B. EVAPORATION TEST RESULTS FOR THE GRAY MILLS MODEL 500 PUMP-AGITATED COLD CLEANER

(Surface Area = 0.415 m^2)

Run	Solvent	Ave. Room Temp. (°K)	Ave. Solvent Temp. (°K)	Ave. Room Draft	Solvent Density (g/ml)	Test Run Time (hr:min)	Volume Loss (l)	Evaporation Rate (ml/hr . m^2)	Evaporation Rate (g/hr . m^2)
1-B	Perchloroethylene	292	293	64	1.62	21:18	10.32	1167	1891
2-B	Perchloroethylene	293	295	28	1.62	43:08	8.34	464	751
3-B	Perchloroethylene No Agitation	299	298	27	1.60	93:35	16.4	423	677
4-B	102 mineral Spirits	288	292	59	0.76	95:47	9.7	244	186
5-B	140 Mineral Spirits	292	295	3	0.77	90:27	2.4	64	49

TABLE C. EVAPORATION TEST RESULTS FOR THE GRAY MILLS MODEL SL-32 UNAGITATED COLD CLEANER

(Surface Area = 0.332 m^2)

Solvent	Ave. Room Temp. (°K)	Ave. Solvent Temp. (°K)	Ave. Room Draft (m/min)	Freeboard Ratio	Solvent Density (g/ml)	Test Run Time (hr:min)	Volume Loss (l)	Evaporation Rate (ml/hr . m^2)	Evaporation Rate (g/hr . m^2)
Perchloroethylene	290	292	57	0.27	1.62	16:09	6.2	1156	1873
Perchloroethylene	292	294	52	0.50	1.59	16:20	4.5	824	1311
Perchloroethylene	298	298	3	0.29	1.60	137:15	2.5	56	89
Perchloroethylene	292	292	3	0.50	1.61	116.27	0.3	8	12
102 Mineral Spirits	290	293	52	0.50	0.77	98:59	4.7	142	109
102 Mineral Spirits	295	293	3	0.29	0.76	137:50	0.4	9	7
102 Mineral Spirits	297	296	3	0.50	0.76	141:25	0.4	8	6
140 Mineral Spirits	296	294	3	0.29	0.77	115:20	0.4	11	8
140 Mineral Spirits	299	297	3	0.50	0.76	164:30	0.2	4	3

TABLE D. EVAPORATION TEST RESULTS FOR THE KLEER-FLO MODEL A-15 UNAGITATED COLD CLEANER

(Surface Area = 0.109 m^2)

Run	Solvent	Ave. Room Temp. (°K)	Ave. Solvent Temp. (°K)	Ave. Room Draft (m/min)	Freeboard Ratio	Solvent Density (g/ml)	Test Run Time (hr:min)	Volume Loss (l)	Evaporation Rate (ml/hr . m^2)	Evaporation Rate (g/hr . m^2)
1-D	Perchloroethylene	290	292	58	0.20	1.62	16:09	2.7	1508	2442
2-D	Perchloroethylene	292	294	53	0.42	1.60	16:20	2.2	1210	1937
3-D	Perchloroethylene	298	299	3	0.20	1.60	92:40	0.9	88	141
4-D	Perchloroethylene	292	292	3	0.42	1.61	117:17	0.3	20	31
5-D	Perchloroethylene	300	299	3	0.74	1.60	71:25	0.2	27	43
6-D	102 Mineral Spirits	290	293	53	0.42	0.78	98:59	1.7	159	124
7-D	102 Mineral Spirits	295	293	3	0.20	0.76	92:40	0.3	26	20
8-D	102 Mineral Spirits	297	296	3	0.42	0.76	140:55	0.4	27	20
9-D	102 Mineral Spirits	299	297	3	0.74	0.77	93:10	0.2	24	18
10-D	140 Mineral Spirits	295	295	3	0.20	0.77	114:40	0.1	9	7
11-D	140 Mineral Spirits	299	298	3	0.42	0.76	164:15	0.2	11	9
12-D	140 Mineral Spirits	295	295	3	0.74	0.77	75:30	0.1	11	8

APPENDIX B

SOLVENT ANALYSES

UNITED STATES ENVIRONMENTAL PROTECTION AGENCY

DATE: May 4, 1977

SUBJECT: Analysis of Mineral Spirits and Perchlorethylene

FROM: R. H. Jungers, Chief RHJ
Source, Fuels, & Molecular Chemistry Section, ACB (MD-78)

TO: R. Shigehara, OAQPS/EMB (MD-13)
W. Pellitier, OAQPS/EMB (MD-13)

Seventeen samples were submitted to this laboratory on a Sample Request and Report Form dated April 21, 1977. Reid Vapor Pressure and Distillation analysis was requested. Distillations were run on all but one sample where a specific request was made that it not be run. Reid Vapor Pressure was requested and attempted on all samples but only three samples had enough pressure for positive measure. This analysis was conducted using the ASTM Method D-323.

REPORT OF ANALYSIS
TRACE ELEMENTS
ppm - for solid samples
ug/ml - for liquid samples

Mark (x) for specific analysis
Mark (x) in block to left of Ident. No. when requesting all analysis on that line

Ident No.	Hg	Be	Cd	As	V	Mn	Ni	Sb	Cr	Zn	Cu	Pb	Se	B	F	Li	Ag	Sn	Fe	Sr	Na	K	Ca	Si	Mg	Ba					Analysis Initial

Analysis Method: 1-NAA, 2-SSMS, 3-OES, 4-AA, 5-ASV, 6-XRF, and 7-other

Comments:

Other Analysis - Use Table B to fill analysis requested (above each column)

Mark (x) for specific analysis requested

Ident No.	DISTILLATION °F	IBP	10%	50%	90%	EP		RVP #		
~~661~~		~~238~~ J.A	~~236~~ J.A	~~237~~ J.A	~~240~~ J.A	~~286~~ J.A				
~~662~~										
661		246	244	245	246	286		0.9		
662		246	245	245	246	290		0.8		
Analyst	J.A							J.A		
Method	~~[illegible]~~ D-86							D-323		

REPORT OF ANALYSIS
TRACE ELEMENTS
ppm - for solid samples
ug/ml - for liquid samples

Mark (x) for specific analysis
Mark (x) in blank to left of sample No. when requesting all analysis on that line

Sample No.	Hg	Be	Cd	As	V	Mn	Ni	Sb	Cr	Zn	Cu	Pb	Se	B	F	Li	Ag	Sn	Fe	Sr	Na	K	Ca	Si	Mg	Ba					

Analysis Method: 1-NAA, 2-SSMS, 3-OES, 4-AA, 5-ASV, 6-XRF, and 7-other

Comments:

Other Analysis - Use Table B to fill analysis requested (above each column)

Mark (x) for specific analysis requested

Sample No.	DISTILLATION °F	IBP	10 %	50 %	90 %	EP		RVP#		
602		326	330	352	393	415				
603		332	333	353	386	428				
604		339	340	353	383	423				
605		332	333	351	384	423				
606		327	328	351	382	409				
607		245	245	245	245	286		0.0		
609		322	325	333	359	388				
610		325	325	333	357	392				
639		330	~~324~~ 330	342	370	409				
608								0.5		
Analyst	CHR + J.A.							J.A.		
Method	~~D-86~~ D-86							D-323		

Comments:

SOURCE SAMPLE REQUEST & REPORT
(MUST BE FILLED OUT FOR EACH TEST RUN)

SAMPLING DATE | YR | MO | DAY |

FIRST IDENT. NO. USED S-77-002-656

LAST IDENT. NO. USED S-77-002-660

TEST NO. #2

RUN NO.

INDUSTRY Emission Measurement Branch (USE TABLE A)

COMPANY IRL Building

ADDRESS

SAMPLING METHOD

UNIT PROCESS OPERATION

AIR POLLUTION CONTROL

FUEL USED

☐ INLET ☐ OUTLET

GAS VOLUME SAMPLED (METER VOL IN FT^3)

IDENT NO	DESCRIPTION OF SAMPLE OR SAMPLE FRACTION	SAMPLE WT (SOLID) MG	SAMPLE VOL (LIQUID) ML	ANALYSIS REQUESTED - GENERAL COMMENTS (APPROX CONCENTRATIONS - POSSIBLE INTERFERENCES ETC) (INDICATE SPECIFIC ANALYSIS ON BACKSIDE)
S-77-002-656	Mineral Spirits - 140 (init) Run 4-A		500	Reid Vapor Pressure - Distillation Analysis
657	Mineral Spirits - 102 (final) Run 3-U		530	"
658	Mineral Spirits - 140 (final) Run 4-A		500	"
659	Mineral Spirits - 140 (init) Run 4-U		500	"
660	Mineral Spirits - 140 (final) Run 4-U		500	"
	REID VAPOR PRESSURE TO LOW TO DETERMINE BY ASTM D-323 ON MINERAL SPIRIT SAMPLES			

COMMENTS:

SAMPLING CONTRACTOR (IF APPLICABLE)

PROJECT OFFICER Walter Pelletier

REQUEST REVIEWED BY [signature]

DATE OF REQUEST 4-21-77

DATE ANALYSIS REQUESTED

DATE OF REQUEST (TO BE FILLED IN BY SSFAB)

EPA(DUP)245

Samples of Mineral Spirits and Perchloroethylene From EMB.

	Distillation °F					
Sample No.	IBP	10%	50%	90%	EP	RVP LBS.
S-77-002-602	326	330	352	383	415	
-603	332	333	353	386	428	
-604	339	340	353	383	423	
-605	332	333	351	384	423	
-606	327	328	351	382	409	
-607	245	245	245	245	286	0.0
-608	Distillation Not Requested					0.5
-609	322	325	333	359	388	
-610	325	325	333	357	392	
S-77-002-639	330	330	342	370	409	
S-77-002-656	369	372	378	393	417	
-657	317	327	342	371	411	
-658	368	371	379	395	423	
-659	364	371	379	395	423	
-660	369	372	380	394	420	
-661	246	244	245	246	286	0.9
-662	246	245	245	246	290	0.8

REPORT OF ANALYSIS
TRACE ELEMENTS
ppm - for solid samples
ug/ml - for liquid samples

Mark (x) for specific analysis
Mark (x) in block to left of Ident. No. if requesting all analysis on that line

Ident No.	Hg	Be	Cd	As	V	Mn	Ni	Sb	Cr	Zn	Cu	Pb	Se	B	F	Li	Ag	Sn	Fe	Sr	Na	K	Ca	Si	Mg	Ba

Analysis Method: 1-NAA, 2-SSMS, 3-OES, 4-AA, 5-ASV, 6-XRF, and 7-other

Comments:

Other Analysis - Use Table B to fill analysis requested (above each column)

Mark (x) for specific analysis

Ident No.	DISTILLATION °F	IBP	10 %	50 %	90 %	EP				
656		369	372	378	393	417				
657		317	327	342	371	411				
658		368	371	379	394	417				
659		364	371	379	395	423				
660		369	372	380	394	420				
Analyst	J.A.									
Method	D-86									

Comments:

SOURCE SAMPLE REQUEST & REPORT

(MUST BE FILLED OUT FOR EACH TEST RUN)

SAMPLING DATE 77 (YR) 4 (MO) 27 (DAY)

FIRST IDENT. NO. USED 5-77-002-661

LAST IDENT. NO. USED 5-77-002-662

TEST NO ____

RUN NO ____

INDUSTRY EPA. IRL Building (USE TABLE A)

UNIT PROCESS OPERATION ____

COMPANY ____

AIR POLLUTION CONTROL ____

ADDRESS ____

FUEL USED ____

☐ INLET ☐ OUTLET

SAMPLING METHOD ____

GAS VOLUME SAMPLED (METER VOL IN FT^3) ____

IDENT NO	DESCRIPTION OF SAMPLE OR SAMPLE FRACTION	SAMPLE WT (SOLID) MG	SAMPLE VOL (LIQUID) ML	ANALYSIS REQUESTED - GENERAL COMMENTS (APPROX CONCENTRATIONS - POSSIBLE INTERFERENCES ETC) (INDICATE SPECIFIC ANALYSIS ON BACKSIDE)
661	Perchloroethylene Run # 5-A (init)		480	Reid Vapor Pressure - Distillation
662	Perchloroethylene Run # 5-A (final)		500	"

COMMENTS: ____

SAMPLING CONTRACTOR ____ (IF APPLICABLE)

PROJECT OFFICER Walter Pellitier

REQUEST REVIEWED BY ____

DATE OF REQUEST ____

DATE ANALYSIS REQUESTED ____

DATE OF REQUEST ____ (TO BE FILLED IN B

EPA(DUR)245

SOURCE SAMPLE REQUEST & REPORT
(MUST BE FILLED OUT FOR EACH TEST RUN)

SAMPLING DATE 77 | 2 | 3 (YR | MO | DAY)

FIRST IDENT. NO USED S-77-002-602

LAST IDENT. NO. USED S-77-002-~~602~~ 639

TEST NO. #1

RUN NO.

INDUSTRY Emission Measurement Branch (USE TABLE A)

COMPANY IRL Building

ADDRESS

SAMPLING METHOD

UNIT PROCESS OPERATION

AIR POLLUTION CONTROL

FUEL USED

[ ] INLET [ ] OUTLET

GAS VOLUME SAMPLED (METER VOL IN FT^3)

IDENT NO	DESCRIPTION OF SAMPLE OR SAMPLE FRACTION	SAMPLE WT (SOLID) MG	SAMPLE VOL (LIQUID) ML	ANALYSIS REQUESTED - GENERAL COMMENTS (APPROX CONCENTRATIONS - POSSIBLE INTERFERENCES ETC) (INDICATE SPECIFIC ANALYSIS ON BACKSIDE)
S-77-002-602	Mineral Spirits - 102 (initial) Run 3-P		490	Reid Vapor Pressure - Distillation Analysis
603	Mineral Spirits - 102 (taken at 3:50 PM)		510	"
604	Mineral Spirits - 102 (final) Run 3 P		490	"
605	Mineral Spirits - 102 (init) Run #3-U (fr 0.5)		475	"
606	Mineral Spirits - 102 (final) Run #3-U (fr 0.5)		475	"
607	Perchloroethene (final) Run 1-U (fr 0.5)		500	"
608	Perchloroethene (Initial)		160	Reid Vapor Pressure only
609	Mineral Spirits - 112 (init) Run #5-A		520	Reid Vapor Pressure - Distillation Analysis
610	Mineral Spirits - 112 (final) Run #5-A		500	"
631	Mineral Spirits - 102 (init) Run #3-U (fr 0.25)		500	"

COMMENTS:

SAMPLING CONTRACTOR (IF APPLICABLE)

PROJECT OFFICER Walter Pelletier

REQUEST REVIEWED BY Roger Shigel

DATE OF REQUEST 4/21/77

DATE ANALYSIS REQUESTED

DATE OF REQUEST (TO BE FILLED IN BY SFAB)

EPA(DUR)245

APPENDIX B. CALCULATIONS

APPENDIX B

CALCULATIONS

CONTENTS

Page

B.1 Degreasing Emission Summary B-1

B.2 Cold Cleaner Emissions B-3

B.2.1 National Cold Cleaner Emissions (1974) B-3

B.2.2 Emission Rate Per Cold Cleaner B-4

B.2.3 Projected Emission Reductions B-5

B.3 Open Top Vapor Degreaser Emissions B-7

B.3.1 National Open Top Vapor Degreaser Emissions (1974) B-7

B.3.2 Emissions Per Average Unit B-7

B.3.3 Projected Emission Reductions B-7

B.4 Conveyorized Degreaser Emissions B-9

B.4.1 National Conveyorized Degreaser Emissions (1974) B-9

B.4.2 Emissions Per Average Unit B-9

B.4.3 Projected Emission Reductions B-9

B.5 Degreasing Waste Solvent Disposal B-11

B.6 Calculations Relating to Adverse Environmental Affects B-13

B.6.1 Increased Boiler Emissions B-13

B.6.2 Stabilizers in Chlorinated Solvents B-14

B.6.3 Utilities Consumption of Carbon Adsorbers B-16

B.6.4 Fuel Costs of Incineration for Manufacturing Cold Cleaners B-17

B.7 References B-18

B.1 DEGREASING EMISSION SUMMARY, 1974 (All units = 10^3 metric tons/yr)

1. Total Organic Emissions from Degreasing 700

Cold Cleaning	380	(55%)
Open Top Vapor Degreasing	200	(28%)
Conveyorized Degreasers (25 CND & 75 CVD)	100	(14%)
Wiping Losses	20	(3%)

2. Contribution to National HC Emissions

$$\frac{\text{Degreasing Emissions (1974)}}{\text{National HC Emission (1975)}} = \frac{700}{28000} = 2.5\%$$

$$\frac{\text{Degreasing Emissions}}{\text{National HC Emissions from Stationary Sources (1975)}} = \frac{700}{17000} = 4.1\%$$

3. Solvent consumption data were collected from several sources and tabulated in Table B-1. The consumption estimates were averaged to estimate the solvent consumption of each type of degreaser. These data were the basis for our emission estimates.

U.S. Consumption of Degreasing Solvents

Table B-1

1974 (10^3 metric tons/year)

Solvent Type	Weighed Average	Monsanto-S.A.D.[1] Tom Hoogheem-1974	U.S. Tariff Comm.[2] Report for 1974	Dow Final Report[3] Survey for 1974	Dow Chart for 1974	Detrex Estimates[4] 1975	Detrex Estimates[4] Projected 1974	J. S. Gunnin[5] Shell Chemical Solvent Bus. Ctr.
	VD+CC=Total	VD + CC = Total	VD + CC = Total	VD + CC = Total	VD Only	VD	VD	
Halogenated								
Trichloroethylene	128+25=153	157	142 + 8 = 150	103 + 39 = 142	143	114	124	
1,1,1 Trichloroethane	80+82=162	90 + 78 = 168	73 +106 = 179	110 + 63 = 173	73	63	53	No Data
Perchloroethylene	41+13= 54	43 + 11 = 54	40 + 19 = 59	41 + 9 = 50	40	45	40	
Methylene Chloride	7+23= 30	10 + 46 = 56	7 + 18 = 25	7.5 +6.3 = 13.8	9	8	6	
Trichlorotrifluoroethane	20+10= 30	- - = 17	- - = -	34 + 18 = 52	20	20	18	
Total	276+153=429	-	-	296 +135 = 431	285	250	241	
Aliphatic	222	225						218
Aromatic								
Benzene	7	7						-
Toluene	14	14						-
Xylene	12	12	No Data	No Data	No Data	No Data	No Data	-
Cyclohexane	1	1						
Heavy Aromatics	12	-						12
Total	46	-						-
Oxygenated								
Ketones								
Acetone	10	10		10				
Methyl Ethyl Ketone	8	7.5	No Data	8	No Data	No Data		No Data
Alcohols								
Butyl	5	3.3		7				
Ethers	6	6		-				
Total	29	26.8		-				
TOTAL	726							

Breakdown:	Expected Accuracy:	Ranges:
Vapor Deg. Solvents = VD = 276 ≈ 275	±10 percent →	VD = 275 ±25 = 250 to 300 (x 10^3 metric ton/yr)
Cold Clean. Solvents = CC = 153+222+46+29	±15%±30%±50% →	CC = (153+25) + (220 ±65) + (75+ 35)
= 153+222+75		= (153 + 155 + 38) to (180 + 285 + 112)
= 153+297		= 323 to 557
= 450		= 450 ± 127

B.2 COLD CLEANER EMISSIONS

B.2.1 National Cold Cleaner Emissions (1974)

Given: (a) Gross cold cleaning solvent consumption = 450 Gg/yr* 1974

(b) about 5% of this is from wiping operations, which are not considered cold cleaner (CC) emissions

(c) about 25 Gg/yr of this is from conveyorized non-boiling degreasers (CND). (See subsection B.4.1)

(d) Waste solvent disposal (WSD) amounts to 280 Gg/yr. Approximately 7% of this is incinerated or landfilled in such a manner that no emissions occur. (See Section 3.1.4)

Calculate: Cold Cleaner Emissions Estimate

450	= Gross cold cleaning solvent consumption
- 25	= for wiping losses
- 25	= CND losses
400	= Cold cleaner emissions if all WSD evaporates
- 20	= controlled emissions due to proper waste solvent disposal
380 (±100) Gg/yr	= estimated emissions from cold cleaners-1974

*Gg = 10^3 metric tons

B.2.2 Emission Rate Per Cold Cleaner

Given: (a) 880,000 Maintenance cold cleaners (1974)

340,000 Manufacturing cold cleaners (1974)

1.22×10^6 Total cold cleaners 1974

(b) A manufacturing cold cleaner has twice the average emission of a maintenance cold cleaner.

Calculate: Individual cold cleaner emission rates

(a) $\frac{380\ (\pm 100)\ Gg/yr}{1.22 \times 10^6\ units} = 0.31\ (\pm 0.08)$ Mg/yr per unit

= 660 lb/yr per unit

≈ 100 (±20) gal/yr per unit

(b) IF: X = average maintenance cold cleaner emission

2X = average manufacturing cold cleaner emission

Ta_1 = national maintenance cold cleaner emissions

Ta_2 = national manufacturing cold cleaner emissions

THEN: $X \times 880\ (\times 10^3) = Ta_1$

$2X \times 340\ (\times 10^3) = Ta_2$

$Ta_1 + Ta_2 = 380\ (\pm 100)(\times 10^3$ metric ton/yr) in 1974

AND: $Ta_1 = 215\ (\times 10^3$ metric ton/yr)

$Ta_2 = 165\ (\times 10^3$ metric ton/yr)

X = 0.24 metric ton/yr = (490 lb/yr)

2X = 0.48 metric ton/yr = (980 lb/yr)

(c) "Safety Kleen" maintenance cold cleaners and others:

Let X_{sk} = average emission from a Safety Kleen cleaner

X_o = average emission from other maintenance cold cleaners

Then:

$X_{sk} = \frac{24 \times 10^3\ metric\ ton/yr}{140,000} = 0.17$ metric ton/sk cleaner = 380 lb/yr

$X_o = \frac{203-24}{880-140} = 0.24$ metric ton = 530 lb/yr

B.2.3 Projected Emission Reductions*

A. Cold Cleaner System A

Assumptions & Estimations:

1. Average typical cold cleaner emits about 0.3 metric tons/yr.

2. An average of 55% of cold cleaning emissions is due to evaporation of waste solvent. This could be reduced to

10% with excellent compliance
30% with average compliance
40% with poor compliance.

3. 45% of the emissions occur directly from the cold cleaner. 20% is through bath evaporation (including agitated & spray evaporation) and 25% is through carry out. Cover closing can reduce bath evaporation from 20% to 4% with excellent compliance
9% with average compliance
18% with poor compliance.

Drainage practice could reduce carry-out from

25% to 5% with excellent compliance
11% with average compliance
18% with poor compliance.

Conclusion:

With excellent compliance system A could reduce emissions by 100-10-4-5= 80%. With average compliance, emissions could be reduced by 100-30-9-11= 50%, With poor compliance, emissions could be reduced by 100-40-14-18= 28%.

*The previous and the following projected estimates represent the best engineering judgement that can be made given the limited data base. These estimates are not to be interpreted as test data; thus, a wide range is given for most estimates.

B. Cold Cleaner System B

Note that excellent compliance would not vary much between systems A and B.

Assumptions & Estimations--same as for system A except:

1. Mechanically assisted covers, the "major control device" and spray specifications and agitation restrictions are estimated to reduce bath evaporation from 20% to 2% with excellent compliance
6% with average compliance
10% with poor compliance

Conclusion:

With excellent compliance system B could reduce emissions by 100-10-25= 83%. With average compliance, emissions could be reduced by 100-30-6-11= 53%. With poor compliance, emissions could be reduced by 100-40-10-18= 32%.

C. Cold Cleaners Using High Volatility Solvent

Recommended controls would effect higher emission reductions on units using highly volatile solvents. It is estimated that with average * compliance emission reduction would increase to 55% for system A and to 69% for system B.

Note: Table 3-14 in the Dow Report estimates emissions from a typical, maintenance cold cleaner. Although the overall emission rates are on the high side, the percentage of emissions from waste solvent evaporation (refilling), carry-out and bath evaporation calculate to 58%, 28%, and 16% respectively. This compares reasonably with the previous estimates of 55%, 25% and 20% for all types of cold cleaners, (considering that manufacturing, cold cleaners tend to have a higher proportion of bath evaporation than do maintenance cleaners).

B.3 OPEN TOP VAPOR DEGREASER EMISSIONS

B.3.1 National Open Top Vapor Degreaser Emissions (1974)

Gross vapor degreasing solvent consumption is 275 (±25) Gg*/yr. Approximately 200 (±20) Gg/yr of this is from Open Top Vapor Degreasing (OTVD) and 75 Gg/yr is from Conveyorized Vapor Degreasing (CVD). These estimates are similar to previous estimates that CVD emit about 65 Gg/yr and OTVD, 210 Gg/yr.

B.3.2 Emissions Per Average Unit

1. If there are 21,000 OTVD (1974), an average OTVD would emit about 200 (±20) Gg/yr ÷ 21,000 = 9.5 MT/yr.

2. If an average OTVD has an open area 18 (±3) ft^2 = 1.67 (±0.3) m^2 then emission per area would average 5,7 $MT/yr \cdot m^2$ (These averages probably are within ± 25 percent accuracy.)

B.3.3 Projected Emission Reductions

Estimates have been made of the total control efficiencies (η_+), the cont efficiencies from improved operating practices (η_o) and control efficiencies from control equipment (η_e) for control systems A and B.

	System A			System B		
	Compliance:			Compliance:		
%	poor	average	excellent	poor	average	excellent
η_o	15	25	35	20	30	40
η_e	20	30	40	30	45	60
η_+	32	47	61	44	62	76
Approx. η_+	30	45	60	45	60	75

Note: $(1 - \eta_+) = (1 - \eta_o)(1 - \eta_e)$

*Gg = 10^3 metric tons

2. Given 9.5 mT/yr per average OTVD,

	Emission Per uncontrolled unit	Emission per controlled unit (mT/yr)		
		poor	average	excellent
System A	9.5	6.5	5.2	3.7
System B	9.5	5.3	3.8	2.4

B.4 CONVEYORIZED DEGREASER EMISSIONS

B.4.1 National Conveyorized Degreaser Emissions (1974)

Given: (a) Emissions from conveyorized vapor degreasers (CVD) is 75 Gg*/yr.

(b) It is estimated that between 25 to 35 percent of the conveyorized degreasers are Conveyorized Non-Boiling Degreasers (CND).[8] This estimate appears somewhat high, thus choose 25 percent which is on the lower end of the range.

Calculate:

(a) CND emit 25 Gg/yr

(b) CVD emit 75 Gg/yr

(c) Total conveyorized degreaser emission are 100 Gg/yr.

B.4.2 Emissions Per Average Unit

1, Estimate that there are about 3170 CVD and 530 CND nationally in 1974.[9,10]

2, An average emission rate for a CVD would be $\frac{75{,}000 \text{ Mg/yr}}{3{,}170 \text{ units}} = 23.7$ MT/yr

3, Average emission from a CND would be $\frac{25{,}000}{530} = 47.2$ MT/yr.

B.4.3 Projected Emission Reductions

Estimates have been made of total control efficiencies (η_+), the control efficiencies from improved operating practices (η_o) and the control efficiencies from control equipment for control systems A and B.

Control Efficiencies (η) (%)		System A Compliance: poor	average	excellent	System B Compliance: poor	avg.	excl.
Improved operation	η_o	20	25	30	20	25	30
Control equipment	η_e	-	-	-	40	50	60
Total	η_+	20	25	30	52	62.5	72
approximated		-	-	-	50	60	70

Note: $(1-\eta_+) = (1-\eta_o)\ (1-\eta_e)$

*Gg = 10^3 MT

B-9

2. Emission control for typical units:

	Emission rate (MT/yr)		
	Uncontrolled	Controlled with System A	Controlled with System B
Conveyorized Vapor Deg.	24	18 (17 to 19)	9 (7 to 11)
Con. Non-boiling Deg.	∿48	36 (34 to 38)	18 (13 to 23)
Average CD	27	20 (19 to 21)	10 (7.5 to 13)

B.5 DEGREASING WASTE SOLVENT DISPOSAL

It has been estimated that 280 (±80) thousand metric tons/yr of waste solvent are disposed of by the solvent metal cleaning industry in 1974. The calculation is based on the following assumptions and estimates.*

Assumptions

1. Percent virgin solvent that becomes waste solvent for each category of degreasers. (EPA and Dow Chemical estimates)

a.	Degreasing industry collectively	30% to 50%
b.	Cold cleaners collectively	45% tO 70%
c.	Maintenance cold cleaners	50% to 75%
d.	Manufacturing cold cleaners	40% to 60%
e.	Conveyorized vapor degreasers	10% to 20%
f.	Open top vapor degreasers	20% to 25%

2. Virgin solvent consumption. (EPA estimates)

a.	Cold cleaners (excluding 10% as wiping losses)	
	Maintenance (56%)	215,000 Mt/yr
	Manufacturing (44%)*	165,000 Mt/yr
b.	Open top vapor degreasers	200,000 Mt/yr
c.	Conveyorized degreasers (vapor and cold)	100,000 Mt/yr

Waste Solvent Estimates

1.	Maintenance cold cleaners	= 134,000 Mt/yr
	(or 215,000 x .625 = 134,000 Mt/yr)	
2.	Manufacturing cold cleaners	= 83,000 Mt/yr
	(165,000 x .50)	
3.	Conveyorized vapor degreasers	= 15,000 Mt/yr
	(100,000 x .15)	

*The accuracy of the estimates is not expected to be better than ± 30%.

4. Open top vapor degreasers = 45,000 Mt/yr

(200,000 x .225)

Total waste solvent = 277,000 Mt/yr(±85,000 Mt/yr)

B-12

B.6 CALCULATIONS RELATING TO ADVERSE ENVIRONMENTAL EFFECTS

B.6.1 Increased Boiler Emissions-Computation

The objective is to determine the magnitude of increased boiler emissions caused by use of a carbon adsorber. The carbon adsorber generally has the highest energy consumption compared to that of other control devices. A typical carbon adsorber could be a Vic #536 AD. According to the J. L. Thompson test report by Dow, the steam usage may be 113 lb. per desorption cycle which converts to 113,000 Btu/cycle. Taking an average of two desorption cycles per day, the consumption becomes about 225,000 Btu/day or 28,000 Btu/hr.

Assume that high sulfur fuel oil were to be used to fire the boiler. Take residual fuel oil with 2% sulfur content. According to "Compilation of Air Pollution Emission Factors" (AP 42) such fuel combustion would emit the following pollutants per 10^3 gal. fuel oil: 310 lb SO_2, 23 lb particulates, 60 lb NO_x, 4 lb CO and 3 lb HC (hydrocarbons).

Relate the emissions to an hourly emission rate. To produce 28,000 Btu/hr at 75% conversion efficiency would require 37,000 Btu/hr of fuel. Choosing #5 fuel oil, we have 148,000 Btu/gal. Thus, increased fuel consumption would be about 0.25 gal/hr.* Increased pollutant emission would then be 0.08 lb/hr (0.036 kg/hr) SO_2, 0.005 lb/hr (0.002 kg/hr) particulates, 0.008 lb/hr (0.00035 kg/hr) NO_x, 0.0005 lb/hr (0.0002 kg/hr) CO and 0.0004 lb/hr (0.0002 kg/hr) HC.

Compare the increased emissions to the emission reduction caused by the carbon adsorber. A typical adsorber system that is properly designed and maintained may save 50 gal/wk $\approx$ 15 lb/hr = 6.8 kg/hr. Thus, the total increased boiler emissions equals about 0.6% of the emission reduction caused by a typical carbon adsorber.

*$\frac{37{,}000 \text{ Btu/hr}}{148{,}000 \text{ Btu/gal}}$ = 0.25 gal/hr of fuel

B.6.2 Stabilizers in Chlorinated Solvents

	% Solubility in water	Fish Toxicity ppm	BOD-20 % of Theory	Boiling Point °C
Trichloroethylene				
Epichlorohydrin	6	15	50	
Butylene Oxide				50-60
Glycidol	25-58			
Acrylonitrile		20		
Diisopropylamine	Sl.S*			
Triethylamine	5.5	30	0	
Ethyl Acetate	9	>100	80	
Diisobutylene	Sl.S	1	0	
Thymol	Sl.S			
N-Methyl Pyrrole				
Acetaldehyde Dimethyl Hydrazone				
Tetrahydrofuran	100	>100	45	
Sec. Butanol	13	>100	85	
N-Propanol	S	1900†		
1,1,1 Trichloroethane				
1,2 Butylene Oxide	10	>100	60	
Butylene				
Nitroethane	non-misc.			115
Nitromethane	10	1000	30	
3-Methoxy Propronitrile				
1,3-Dioxolane	100	300	0	
1,4-Dioxane	100	>100	30	
N-Methyl-Pyrrole				
Toluene	S	3100†	60	112
Methyl Ethyl Ketone	27-37	>1000	75	80
Isobutyl Alcohol	10	>100	80	
Tertiary Butanol	~20			~120
Sec. Butanol	13	>100	85	
Acrylonitrile			75	
Acetonitrile	100	>100		82
Isopropyl Nitrate				
Tertiary Amyl Alcohol	partially S			
1,3,5 Trioxane		14**		115
2 Methyl-3-Butynol-2				

*Sl. = slightly and s. = soluable
**TDL - oral human

†Concentration giving 50% fatality to rats when feed orally, i.e. LD 50.

	% Solubility in water	Fish Toxicity ppm	BOD-20 % of Theory	Boiling Point °C
Methylene Chloride				
Propylene Oxide	40-60	>100	75	34
Butylene Oxide				
Amylene	Sl.S	30	5	
Cyclohexane	0			
Methylene Chloride	2	2100†		
Perchloroethylene				
Thymol	Sl.S			
4-Methyl Morpholine	100	2700†		115
P-Tertiary Amyl Phenol	partially	3100†		
3-N-Propoxy Propionitrile				
Isopropyl Alcohol	100	>100	80	82
Epichlorohydrin	6	15	50	
Diallylamine				112

Estimated Stabilizer Emissions into Sewer

	% Stabilizers in Solvent blend	Approximate Solubility %	Sewer Emission Rate gal/wk	Sewer Emission Rate m^3/wk
Worst Case:	5%	40%	1.0	0.004
Average Case:	2%	30%	0.2	0.0008
			Atmospheric Emission Reducti	
Typical Emission Control:			50 gal/wk	0.2 m^3/w

B.6.3 UTILITIES CONSUMPTION OF CARBON ADSORBERS

Reference to Dow Report Appendix:	Test Site	Model Adsorber Vic #	Ventilation Rate Both Beds Adsorbing (cfm)	Solvent Recovered (gal/wk)	Water Consumption (10^3 gal/yr)	Steam Consumption (10^6 Btu/yr)	Electricity (10^3 kw)
C-10	Vic Manuf. Co.	572AD	5500	70	630	310	30
C-8	Super Radiator Co.	554AD	≈3000	*	1380	380	30
C-9	J. L. Thompson Co.	536AD	940	25 to 50*	230	54	4
C-11	W. Electric Co.	536AD	≈1300	85	1380	520	13
Average			2700		900	320	19

*Defective control systems

B.6.4 Fuel Cost of Incineration for Manufacturing Cold Cleaners

Assume a ventilation rate of 50 cubic ft/minute/ft^2 of open top area, an average tank area of 6 ft^2, 8 hours of operation per weekday and 2 1/2 dollars/million BTU fuel cost. Using an air density of 0.075 lbs/ft^2, a specific heat of 0.25 BTU/lbs°F for air, and a maximum temperature of 800°F, an approximate annual fuel cost would be about $1200/year, as summarized below.

Exhaust volume = 300 cfm x 60 min/hr x 8 hr/day x 240 day/yr = 35×10^6 ft^3/yr

Heat required = 35×10^6 ft^3 x 0.075 lb/ft^3 x 0.25 BTU/lb°F x 740°F = 485×10^6 BTU/yr

Annual fuel cost = 485×10^6 BTU/yr x 2.50 $/$10^6$ BTU = 1215 $\approx$ 1200 $/yr

B.7 REFERENCES

1. Information provided by Tom Hoogheem, Monsanto Research Corp., Dayton, Ohio, by telephone to J. C. Bollinger, EPA, on December 1 and 6, 1976.
2. Surprenant, K. S. and Richards, D. W. of Dow Chemical Company, "Study to Support New Source Performance Standards for Solvent Metal Cleaning Operations," 2 vol., prepared for Emission Standards and Engineering Division (ESED), under Contract # 68-02-1329, Task Order #9, June 30, 1976, pp. 7-3.
3. Ibid.
4. Kearney, T. J., Detrex Chemical Ind., letter to J. C. Bollinger, EPA, January 9, 1976.
5. Information provided by J. S. Gunnin, Shell Chemical Co., Houston, by telephone to J. C. Bollinger, EPA, September 16, 1976.
6. Op. Cit., Surprenant, K. S., pp. 7-3.
7. Bollinger, John C., "Trip Report - ASTM, Consultant and Two Waste Solvent Plants," memo to David R. Patrick reporting on trip to ASTM D-26 meeting of January 26, 1977.
8. Bollinger, J. C., "Maximum Impact of NSPS on 1985 National Degreasing Emissions," December 1975.
9. Ibid.
10. Surprenant, K. S., Op. Cit.
11. Ibid. pp. 7-3.

TECHNICAL REPORT DATA
(Please read Instructions on the reverse before completing)

1. REPORT NO. EPA 450/2-77-022	2.	3. RECIPIENT'S ACCESSION NO.
4. TITLE AND SUBTITLE Control of Volatile Organic Emissions from Solvent Metal Cleaning		5. REPORT DATE November 1977
		6. PERFORMING ORGANIZATION CODE
7. AUTHOR(S) John C. Bollinger* Jeffrey L. Shumaker, ESED		8. PERFORMING ORGANIZATION REPORT N OAQPS 1.2-079
9. PERFORMING ORGANIZATION NAME AND ADDRESS U. S. Environmental Protection Agency Office of Air and Waste Management Office of Air Quality Planning and Standards Research Triangle Park, North Carolina 27711		10. PROGRAM ELEMENT NO.
		11. CONTRACT/GRANT NO.
12. SPONSORING AGENCY NAME AND ADDRESS		13. TYPE OF REPORT AND PERIOD COVERE
		14. SPONSORING AGENCY CODE

15. SUPPLEMENTARY NOTES

*No longer with EPA

16. ABSTRACT

This report provides the necessary guidance to control emissions of volatile organic compounds (VOC) from solvent metal cleaning operations. Emissions are characterized and reasonably available control technology (RACT) is defined for each of the three major categories of solvent metal cleaners: cold cleaners, open top vapor degreasers, and conveyorized degreasers. Information on the cost of control, environmental impact and enforcement issues is also included.

17. KEY WORDS AND DOCUMENT ANALYSIS

a. DESCRIPTORS	b. IDENTIFIERS/OPEN ENDED TERMS	c. COSATI Field/Group
Air Pollution Solvent Metal Cleaning (Degreasing) Emissions and Controls Regulatory Guidance	Air Pollution Controls Stationary Sources Organic Vapors Degreasing	

18. DISTRIBUTION STATEMENT Unlimited	19. SECURITY CLASS (This Report) Unclassified	21. NO. OF PAGES 203
	20. SECURITY CLASS (This page) Unclassified	22. PRICE

EPA Form 2220-1 (9-73)

ENVIRONMENTAL PROTECTION AGENCY
Technical Publications Branch
Office of Administration
Research Triangle Park, North Carolina 27711

OFFICIAL BUSINESS
AN EQUAL OPPORTUNITY EMPLOYER

POSTAGE AND FEES PAID
ENVIRONMENTAL PROTECTION AGENCY
EPA - 335

U.S.MAIL

Return this sheet if you do NOT wish to receive this material ☐ or if change of address is needed ☐. (Indicate change, including ZIP code.)

PUBLICATION NO. EPA-450/2-77-022