Note: EPA no longer updates this information,
but it may be useful as a reference or resource.

AP42 Section All

Title: Technical Procedures for Developing AP42 Emission Factors and Preparing AP42 Sections

US EPA, April 1980

Technical Procedures for Developing AP-42 Emission Factors and Preparing AP-42 Sections

U.S. ENVIRONMENTAL PROTECTION AGENCY
Air Management Technology Branch
Office of Air Quality Planning and Standards
Research Triangle Park, North Carolina 27711

April 1980

TECHNICAL PROCEDURES FOR DEVELOPING AP-42 EMISSION FACTORS AND PREPARING AP-42 SECTIONS

by

Air Management Technology Branch
Monitoring and Data Analysis Division

U. S. Environmental Protection Agency
Office of Air Quality Planning and Standards
Research Triangle Park, North Carolina 27711

April 1980

DISCLAIMER

This report has been reviewed by the Office of Air Quality Planning and Standards, U.S. Environmental Protection Agency, and approved for publication. Mention of trade names or commercial products does not constitute endorsement or recommendation for use.

CONTENTS

		Page
Figures		v
1.	Introduction	1
2.	Purpose of AP-42	3
	2.1 Estimates of areawide emission	4
	2.2 Emission estimates for a specific facility	5
	2.3 Emissions in relation to ambient air quality	6
3.	Internal Procedures	7
	3.1 Reasons and methods for initiating section preparation/revision	7
	3.2 Overview of section preparation/revision	8
	3.3 Publication	10
4.	Guide to Section Preparation/Revision	12
	4.1 Description of a typical AP-42 section	12
	4.2 Summary of specifications and format definition	19
	4.3 General	22
	4.4 Sources of emission data/data collection	23
	4.5 Data reduction	25
	4.6 Data presentation	26
	4.7 General industry information	27
	4.8 Background files	27
	4.9 Agency/outside review	29
	4.10 Final revision	30
5.	Technical Specifications and Rationale	32
	5.1 Data standards/test methods	32
	5.2 Statistical methods	35
	5.3 Quality rating/statistical confidence	37
	5.4 Units	39
	5.5 Nomenclature	41

CONTENTS (continued)

		Page
5.6	Reporting format	41
5.7	Figures	45
5.8	Criteria/noncriteria pollutants	48
5.9	Controlled/uncontrolled emissions	49
5.10	Condensibles	50
5.11	Organic emissions	52
5.12	Lead	53

FIGURES

Number		Page
1	Flow Diagram of AP-42 Section Preparation or Revision	9
2	Example of a Typical AP-42 Section	13
3	Example of a "Standard" Figure Employing Both Box and Equipment Illustrations	47

SECTION 1

INTRODUCTION

The document "Compilation of Air Pollutant Emission Factors" (AP-42), published by the U.S. Environmental Protection Agency (EPA) since 1972, is a compilation of emission factor reports. An emission factor relates the quantity (weight) of pollutants emitted to a unit of activity of the source.

Supplements to AP-42 have been published for both new emission source categories* and as updates to existing emission source categories. As more information about sources and control of emissions becomes available, AP-42 is updated by EPA in a timely and consistent manner.

This manual describes the procedures and technical criteria for AP-42 reporting. It is a guide for the EPA personnel and contractors who prepare AP-42 sections.

The emission factors reported in AP-42 have many uses. They provide persons working in air pollution control with documented, technically acceptable estimates of emission rates for sources. Three separate uses for emission factors can be identified:

1. Estimates of areawide emissions
2. Emission estimates for a specific facility
3. Evaluation of emissions in relation to ambient air quality

*The term "emission source category" is used to indicate a separable emission factor report. Reports may be categorized by industry, by process, by product, by fuel, or by other common denominators.

A more detailed description of the purpose and uses of AP-42 is given in Section 2.

Section 3 outlines procedures to be followed by the Source Analysis Section (SAS) in preparing or revising an AP-42 section; it includes reasons for initiation, overview of section preparation, and review and publication procedures.

Section 4 details the actual tasks involved in section preparation or revision: gathering and reduction of data; writing, documentation, and review of the draft section; and incorporation of comments into the final section. These tasks, which begin after authorization of the work by the SAS chief, are done by EPA or by a contractor.

Section 5 describes the standard procedures to follow in such areas as nomenclature, figure presentation, units, and reporting format. It also describes the technical specifications for reporting about lead, organics, and condensibles.

SECTION 2

PURPOSE OF AP-42

Persons working in air pollution control need some way to estimate the quantity of emissions released to the atmosphere by different operations. Realizing this need, EPA has compiled all emission factor information into a single report, AP-42.

An emission factor is an estimate of the rate at which a pollutant is released to the atmosphere as a result of some activity (such as combustion or industrial production) divided by the level of that activity. In addition to reporting emission factors, AP-42 presents empirical formulas for use in calculating emission factors that include the impact of local conditions. Data obtained from source tests, material balance studies, and engineering estimates are used to calculate the emission factors in AP-42.

The author of an AP-42 section considers how the emission factor will be used and identifies for the user any qualifications or limitations of the data. The emission factors represent the best available information on average emissions from specific source categories. Statistical averages (such as AP-42 emission factors) seldom specifically represent any of the individual data used to compute the average; they may describe none of the specific parts of the sample population. The averages are useful, however, for many decisionmaking purposes.

The emission factors are used for three purposes, which are described in the following subsections.

2.1 ESTIMATES OF AREAWIDE EMISSION

The primary use of AP-42 emission factors is in the compilation of emission inventories for criteria pollutants.

When compiling an inventory, emission factors are applied to numerous emission sources within a source category. The resultant inventory of areawide emissions is quite accurate. Because AP-42 emission factors are for an "average" facility, individual plant differences cancel out each other when numerous like sources are considered. Where one or a few facilities produce a large percentage of the areawide emissions, the inventory applies facility-specific emission rates rather than emission factors.

In cases where a source category either constitutes a large percentage of overall emissions of a pollutant or contains a relatively small number of sources, the emission category (e.g., anthracite combustion) is divided into subcategories (e.g., traveling grate). For example, factors for combustion emissions from large boilers give specific information about the type of boiler and fuel being used, because most emissions from boilers are produced by only one or two facilities for which detailed information is generally available. Emissions from concrete or asphalt batching plants do not generally constitute a major percentage of the emissions in the inventory, and they are produced by numerous sources. Application of an "average" factor to these sources introduces only a small potential error into the overall inventory.

Emission inventories are compiled for numerous statutory reasons, as well as simply to find out which sources constitute the major emitters of specific pollutants. The State Implementation Plan (SIP) regulations require that emission inventories be compiled for present and future years. The latest SIP submittals must show reasonable further progress toward the attainment of the National Ambient Air Quality Standards (NAAQS).

Control agencies in nonattainment areas must estimate emissions on an annual basis to show reasonable progress toward attainment.

Estimates based on emission factors are used in the SIP process to identify major emission sources that need more stringent regulation. The estimates are also used as a starting point for regulation development. For example, the factors are used to estimate uncontrolled emissions for the purpose of defining reasonably available control technology (RACT) in a process weight table.

2.2 EMISSION ESTIMATES FOR A SPECIFIC FACILITY

The AP-42 emission factors are sometimes used to estimate facility-specific emissions. Although many of these uses are legitimate, some (i.e., use in enforcement litigation) are clearly improper. Legitimate facility-specific uses include the following:

- Comparison with emission estimates submitted by the owner of the facility
- Prediction of emissions from a proposed facility
- Emission estimates where the cost of source testing is not justified
- Submittal when other emission estimates are not available

The AP-42 factors are not be used when stack test data exist for the facility.

Because the factors are used for facility-specific estimates, especially for estimates of emissions from proposed facilities, the AP-42 section notes the conditions under which the emission factor is not directly applicable. These qualifications are clearly footnoted at the bottom of the emission factor table, as well as being described in the text.

Statutory requirements for which AP-42 emission factors may be used include PSD and NEDS submittals. A mechanism is needed to estimate the impact of the pollutants from a proposed facility before it is built, and the emission factors in AP-42 provide the best source of these data. Because most of the factors in AP-42 represent uncontrolled emissions, controls corresponding to the best available control technologies (BACT) are included in the final estimate of the impact of the facility. In non-attainment areas, a similar process is used to estimate the lowest achievable emission rate (LAER).

2.3 EMISSIONS IN RELATION TO AMBIENT AIR QUALITY

The Clean Air Act requires eventual attainment of ambient levels for the criteria pollutants. Pollutant emission rates can be used in conjunction with dispersion modeling as a tool to estimate ambient levels of pollutants.

In many cases, however, the relationship between what is emitted by a source and what is measured in ambient air is very complicated. Numerous dispersion models are used to establish this relationship. Models inherently assume that the model input represents actual emissions to the atmosphere. For instance, pollutants that are emitted as a vapor because of a high stack temperature but that condense upon reaching the air are assumed to have reached ambient conditions. Certain stack test methods that do not fully account for condensibles may lead to incorrect predictions of ambient levels.

Prediction of ambient concentrations is an important use of AP-42 emission factors. The input requirements of dispersion models are considered in the preparation of AP-42 emission factor reports. Although the reports are not designed around the specific needs of dispersion models, when changes in report format or units can ease the use of the factor in modeling, these changes are considered.

SECTION 3

INTERNAL PROCEDURES

The Source Analysis Section of the Air Management Technology Branch (AMTB) of EPA's Office of Air Quality Planning and Standards (OAQPS) is responsible for all aspects of emission factor reporting, including the development of new emission factor reports and the periodic revision of existing reports. The AMTB is not responsible for source testing associated with the development of emission factors or for mobile source emission factor development. Most source testing related directly to emission factor development or revision is performed by the Industrial and Environmental Research Laboratory (IERL) or the Emission Standards and Engineering Division (ESED).

3.1 REASONS AND METHODS FOR INITIATING SECTION PREPARATION/ REVISION

Personnel at SAS/ATMB acquire data from other groups for use in AP-42, but do not themselves generate data for emission factor development.

The AP-42 sections are prepared or revised for one of the following reasons:

Outside requests for better source and emission factor information, or for information on a category not covered by AP-42, come from other branches within OAQPS, EPA laboratories, EPA regional offices, state agencies, trade associations, special interest groups, or even from individuals. The requests take the form of directives, letters, verbal requests, or comments on published emission factors.

New information is developed for background documents prepared by ESED before setting New Source Performance Standards and for reports by various EPA laboratories.

Contractor or consultant expertise on a source category may prompt section preparation or revision. This expertise may have developed during previous work for EPA or other clients.

Although most AP-42 work is done for these reasons, any person may give SAS relevant information that leads to a section revision. An SAS Project Officer analyzes the proposed work in terms of its relationship to existing needs and priorities, contract funding or availability of SAS personnel, the likely magnitude of the effort, and other criteria. Based on these criteria, the Project Officer establishes priorities for AP-42 revisions and makes recommendations to the SAS Chief.

The tasks of section preparation are done either by in-house personnel or by a contractor, depending on cost, time, and contractor qualifications. These tasks include compilation or generation of data, data evaluation, and preparation of the draft section and background document. No matter who prepares the draft section, the SAS engineer assigned to the project proceeds thereafter as if he or she had prepared the section. Other internal tasks include EPA review, coordination of outside review, final editing, formatting, and publication.

3.2 OVERVIEW OF SECTION PREPARATION/REVISION

A flow diagram of the process of section preparation or revision is shown in Figure 1. The first task is assembly of all available data on the emission source and the pollutants it emits. This task includes a complete review of the background documents for the existing emission factor report. Potential data sources are listed below:

Literature search, including the National Technical Information Service (NTIS)

AP-42 reference file

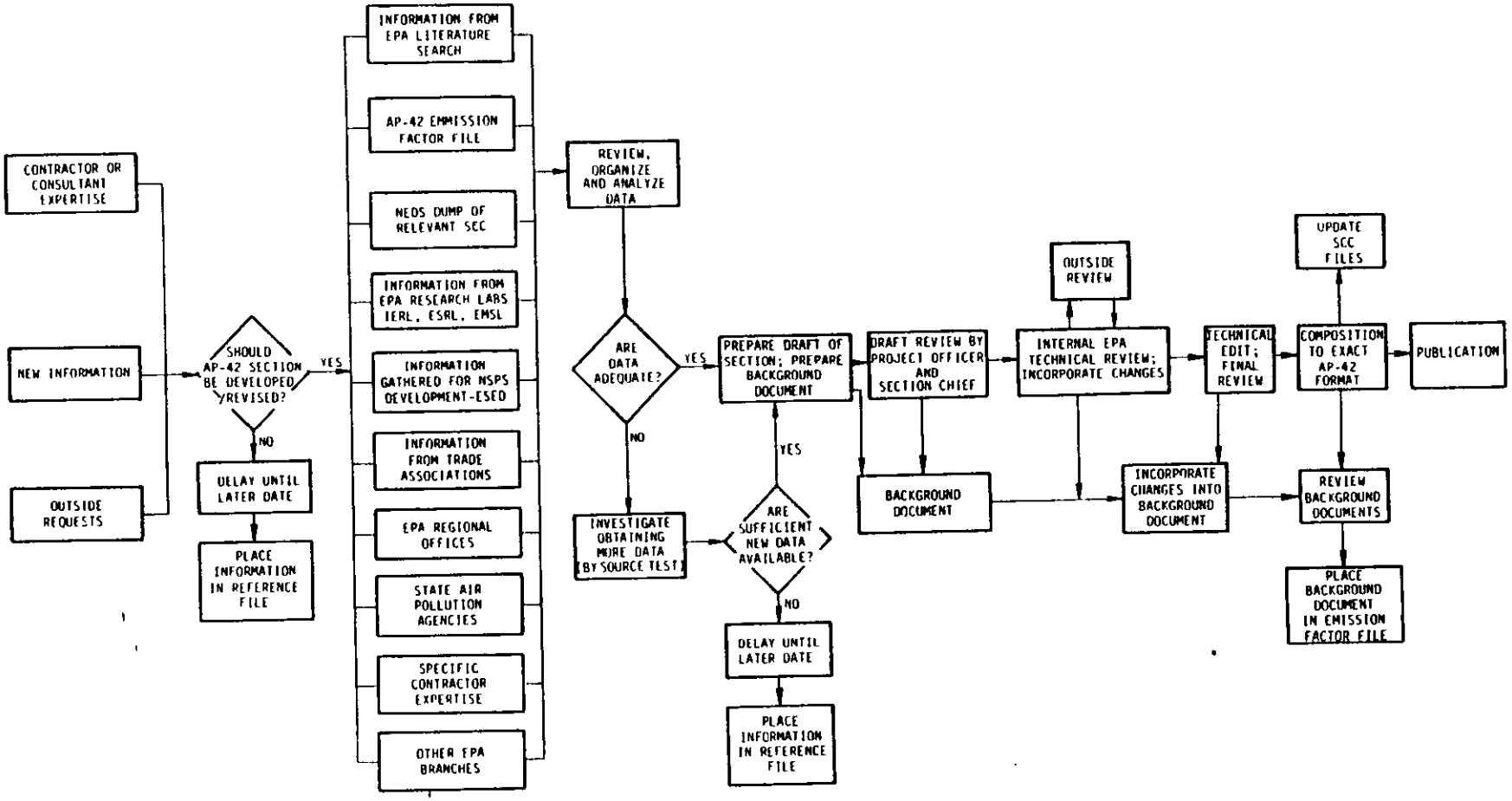

Figure 1. Flow diagram of AP-42 section preparation or revision.

National Emission Data System

EPA research laboratories

New Source Performance Standard (NSPS) information

Trade associations

EPA Regional offices

State air pollution control agencies

Contractor expertise

Other EPA branches

After assembly, the data are reviewed, organized, and analyzed. Using the standards given in Sections 5.1, 5.2, and 5.3, the SAS Project Officer decides whether the collected data are sufficient to justify preparation or revision of the section. This review by the SAS Project Officer occurs even when a contractor has compiled the data. If the data are not sufficient, other sources are searched.

When sufficient data to calculate the emission factor(s) have been gathered, a draft of the new or revised section is prepared. The draft is reviewed by both the Project Officer and the SAS Chief and corrected before being distributed for technical review. At this time a background document, containing all primary references, calculations, and other pertinent information, is prepared.

Comments by EPA and outside reviewers are incorporated into the draft by the contractor. The draft may then be distributed for further review. When these steps are completed, the section is ready for publication.

3.3 PUBLICATION

Publication of an AP-42 section entails editing, formatting, clearance, and final printing. The section is first edited by a technical editor who reviews grammar, clarity, and overall

format. The editorial comments are returned to the author and checked for technical correctness.

After editing, the section is prepared for publication in AP-42 format. This format is described in Section 5.6. Changes are again reviewed by the author. When the section is deemed acceptable for publication by the author and the Project Officer, final technical clearance is requested from the Chief SAS.

When clearance is received, the Project Officer sends the section to the EPA group responsible for publication. The revised sections are usually held until several are completed for publication by SAS.

The background document is completed by the author during the preparation of the AP-42 section. As a final check, the author reviews the background document to confirm that it corresponds to the approved section and that all changes made to the draft AP-42 section are also included in the background document. Copies of the final version of the section, the background document, and the references are placed in the AP-42 reference file.

SECTION 4

GUIDE TO SECTION PREPARATION/REVISION

This section is a guide for the individuals who prepare or revise emission factor reports. On an ongoing basis, new emission factor reports or revisions are prepared for publication in AP-42. Since the AP-42 document has many authors, a standardized system of section preparation and revision is designed to make the information in the document consistent.

4.1 DESCRIPTION OF A TYPICAL AP-42 SECTION

The typical AP-42 section consists of the following elements:

- General process description with flow diagram
- Discussion of emissions and controls
- Emission factor table and/or equations for calculating emission factors
- References

Figure 2 shows a typical AP-42 section.

Few of the users of AP-42 use the section in the order in which it is now presented. The user often turns first to the table to obtain the emission factor. If the information is not clear, the user may then consult the illustration or the text. If something is still not clear, the references are consulted.

The emission factor table enables a user to extract an emission factor for a source and gives the user all the information needed to apply the factor correctly. The user is

8.15 LIME MANUFACTURING

by Tom Lahre

8.15.1 General[1-4]

Lime is the high-temperature product of the calcination of limestone. There are two kinds of lime: high-calcium lime (CaO) and dolomitic lime (CaO · MgO). Lime is manufactured in various kinds of kilns by one of the following reactions:

$$CaCO_3 + \text{heat} \rightarrow CO_2 + CaO \text{ (high calcium lime)}$$

$$CaCO_3 \cdot MgCO_3 + \text{heat} \rightarrow CO_2 + CaO \cdot MgO \text{ (dolomitic lime)}$$

In some lime plants, the resulting lime is reacted (slaked) with water to form hydrated lime.

The basic processes in the production of lime are (1) quarrying the raw limestone, (2) preparing the limestone for the kilns by crushing and sizing, (3) calcining the limestone, (4) processing the quicklime further by hydrating, and (5) miscellaneous transfer, storage, and handling operations. A generalized material flow diagram for a lime manufacturing plant is given in Figure 8.15-1. Note that some of the operations shown may not be performed in all plants.

The heart of a lime plant is the kiln. The most prevalent type of kiln is the rotary kiln, accounting for about 90 percent of all lime production in the United States. This kiln is a long, cylindrical, slightly inclined, refractory-lined furnace through which the limestone and hot combustion gases pass countercurrently. Coal, oil, and natural gas may all be fired in rotary kilns. Product coolers and kiln-feed preheaters of various types are commonly employed to recover heat from the hot lime product and and hot exhaust gases, respectively.

The next most prevalent type of kiln in the United States is the vertical, or shaft, kiln. This kiln can be described as an upright heavy steel cylinder lined with refractory material. The limestone is charged at the top and calcined as it descends slowly to the bottom of the kiln where it is discharged. A primary advantage of vertical kilns over rotary kilns is the higher average fuel efficiency. The primary disadvantages of vertical kilns are their relatively low production rates and the fact that coal cannot be used without degrading the quality of the lime produced. Although still prevalent in Europe, there have been few recent vertical kiln installations in the United States because of the high production requirements of domestic manufacturers.

Other, much less common, kiln types include rotary hearth and fluidized-bed kilns. The rotary hearth kiln, or "calcimatic" kiln, is a circular-shaped kiln with a slowly revolving donut-shaped hearth. In fluidized-bed kilns, finely divided limestone is brought into direct contact with hot combustion air in a turbulent zone, usually above a perforated grate. Dust collection equipment must be installed on fluidized-bed kilns for process economics because of the high lime carryover into the exhaust gases. Both kiln types can achieve high production rates, but neither can operate with coal.

About 10 percent of all lime produced is converted to hydrated (slaked) lime. There are two kinds of hydrators: atmospheric and pressure. Atmospheric hydrators, the most prevalent kind, are used to produce high calcium and normal dolomitic hydrates. Pressure hydrators, on the other hand, are only employed when a completely hydrated dolomitic lime is needed. Atmospheric hydrators operate continuously, whereas pressure hydrators operate in a batch mode. Generally, water sprays or wet scrubbers are employed as an integral part of the hydrating process to prevent product losses. Following hydration, the resulting product may be milled and conveyed to air separators for further drying and for removal of the coarse fractions.

Figure 2. Example of a typical AP-42 section.

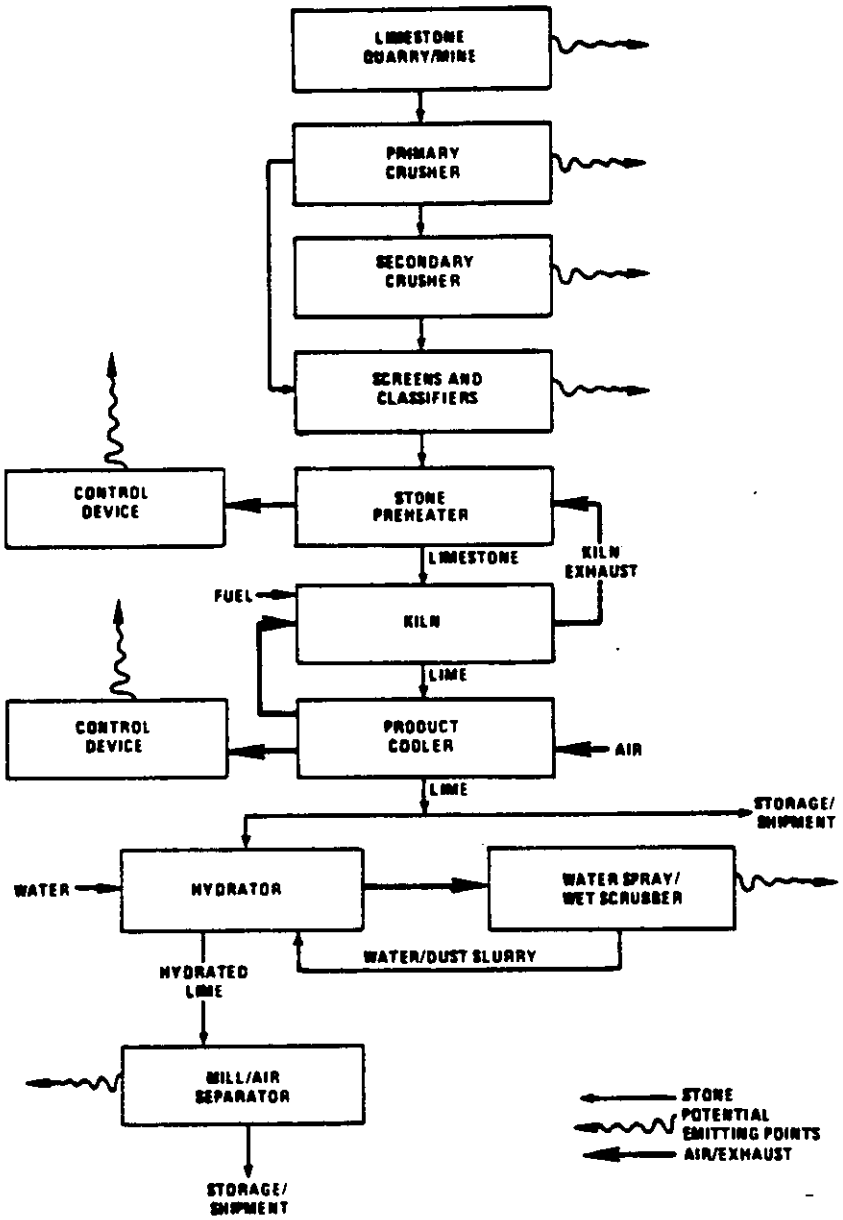

Figure 8.15-1. Generalized lime manufacturing plant.

Figure 2 (continued).

In the United States, the major use of lime is in chemical and metallurgical applications. Two of the largest uses in these areas are as steel flux and in alkali production. Other lesser uses include construction, refractory, and agricultural applications.

8.15.2 Emissions and Controls[3-5]

Potential air pollutant emitting points in lime manufacturing plants are shown in Figure 8.15-1. Particulate is the only pollutant of concern from most of the operations; however, gaseous pollutants are also emitted from kilns.

The largest source or particulate is the kiln. Of the various kiln types in use, fluidized-bed kilns have the highest uncontrolled particulate emissions. This is due primarily to the very small feed size combined with the high air flow through these kilns. Fluidized-bed kilns are well controlled for maximum product recovery. The rotary kiln is second to the fluidized-bed kiln in uncontrolled particulate emissions. This is attributed to the small feed size and relatively high air velocities and dust entrainment caused by the rotating chamber. The rotary hearth, or "calcimatic" kiln ranks third in dust production, primarily because of the larger feed size combined with the fact that the limestone remains in a stationary position relative to the hearth during calcination. The vertical kiln has the lowest uncontrolled dust emissions due to the large lump-size feed and the relatively slow air velocities and slow movement of material through the kiln.

Some sort of particulate control is generally employed on most kilns. Rudimentary fallout chambers and cyclone separators are commonly used for control of the larger particles; fabric and gravel bed filters, wet (commonly venturi) scubbers, and electrostatic precipitators are employed for secondary control. Table 8.15-1 yields approximate efficiencies of each type of control on the various types of kilns.

Nitrogen oxides, carbon monoxide, and sulfur oxides are all produced in kilns, although the latter are the only gaseous pollutant emitted in significant quantities. Not all of the sulfur in the kiln fuel is emitted as sulfur oxides because some fraction reacts with the materials in the kiln. Some sulfur oxide reduction is also effected by the various equipment used for secondary particulate control. Estimates of the quantities of sulfur oxides emitted from kilns, both before and after controls, are presented in Table 8.15-1.

Hydrator emissions are low because water sprays or wet scrubbers are usually installed for economic reasons to prevent product loss in the exhaust gases. Emissions from pressure hydrators may be higher than from the more common atmospheric hydrators because the exhaust gases are released intermittently over short time intervals, making control more difficult.

Product coolers are emission sources only when some of their exhaust gases are not recycled through the kiln for use as combustion air. The trend is away from the venting of product cooler exhaust, however, to maximize fuel use efficiencies. Cyclones, baghouses, and wet scrubbers have been employed on coolers for particulate control.

Other particulate sources in lime plants include primary and secondary crushers, mills, screens, mechanical and pneumatic transfer operations, storage piles, and unpaved roads. If quarrying is a part of the lime plant operation, particulate may also result from drilling and blasting. Emission factors for some of these operations are presented in Sections 8.20 and 11.2.

Emission factors for lime manufacturing are presented in Table 8.15-1.

Figure 2 (continued).

Table 8.15-1. EMISSION FACTORS FOR LIME MANUFACTURING
EMISSION FACTOR RATING: B

Source	Emissions[a]							
	Particulate		Sulfur dioxide		Nitrogen oxides		Carbon monoxide	
	lb/ton	kg/MT	lb/ton	kg/MT	lb/t	kg/MT	lb/ton	kg/MT
Crushers, screens, conveyors, storage piles, unpaved roads	b	b	Neg.	Neg.	Neg.	Neg.	Neg.	Neg.
Rotary kilns								
Uncontrolled[c]	340	170	d	d	3	1.5	2	1
After settling chamber or large diameter cyclone	200	100	d	d	3	1.5	2	1
After multiple cyclones	85[e]	43[e]	d	d	3	1.5	2	1
After secondary dust collection[f]	1	0.5	g	g	3	1.5	2	1
Vertical kilns								
Uncontrolled	8	4	NA[h]	NA[h]	NA	NA	NA	NA
Calcimatic kilns[i]								
Uncontrolled	50	25	NA	NA	0.2	0.1	NA	NA
After multiple cyclones	6	3	NA	NA	0.2	0.1	NA	NA
After secondary dust collection[j]	NA	NA	NA	NA	0.2	0.1	NA	NA
Fluidized-bed kilns	NA[k]	NA[k]	NA	NA	NA	NA	NA	NA
Product coolers								
Uncontrolled	40[l]	20[l]	Neg.	Neg.	Neg.	Neg.	Neg.	Neg.
Hydrators	0.1[m]	0.05[m]	Neg.	Neg.	Neg.	Neg.	Neg.	Neg

[a]All emission factors for kilns and coolers are per unit of lime produced. Divide by two to obtain factors per unit of limestone feed to the kiln. Factors for hydrators are per unit of hydrated lime produced. Multiply by 1.25 to obtain factors per unit of lime feed to the hydrator. All emissions data are based on References 4 through 6.

[b]Emission factors for these operations are presented in Sections 8.20 and 11.2.

[c]No particulate control except for settling that may occur in the stack breeching and chimney base.

[d]When low-sulfur (less than 1 percent, by weight) fuels are used, only about 10 percent of the fuel sulfur is emitted as SO_2. When high-sulfur fuels are used, approximately 80 percent of the fuel sulfur is emitted as SO_2.

[e]This factor should be used when coal is fired in the kiln. Limited data suggest that when only natural gas or oil is fired, particulate emissions after multiple cyclones may be as low as 20 to 30 lb/ton (10 to 15 kg/MT).

[f]Fabric or gravel bed filters, electrostatic precipitators, or wet (most commonly venturi) scrubbers. Particulate concentrations as low as 0.2 lb/ton (0.1 kg/MT) have been achieved using these devices.

[g]When scrubbers are used, less than 5 percent of the fuel sulfur will be emitted as SO_2, even with high-sulfur coal. When other secondary collection devices are used, about 20 percent of the fuel sulfur will be emitted as SO_2 with high-sulfur fuels and less than 10 percent with low-sulfur fuels.

[h]Not available.

[i]Calcimatic kilns generally employ stone preheaters. All factors represent emissions after the kiln exhaust passes through a preheater.

[j]Fabric filters and venturi scrubbers have been employed on calcimatic kilns. No data are available on particulate emissions after secondary control.

[k]Fluidized-bed kilns must employ sophisticated dust collection equipment for process economics, hence, particulate emissions will depend on the efficiency of the control equipment installed.

[l]Some or all of the cooler exhaust is typically used in the kiln as combustion air. Emissions will result only from that fraction that is not recycled to the kiln.

[m]This is a typical particulate loading for atmospheric hydrators following water sprays or wet scrubbers. Limited data suggest particulate emissions from pressure hydrators may be approximately 2 lb/ton (1 kg/MT) of hydrate produced, after wet collectors.

Figure 2 (continued).

References for Section 8.15

1. Lewis, C.J. and B.B. Crocker. The Lime Industry's Problem of Airborne Dust. J. Air Pol. Control Asso. Vol. 19, No. 1. January 1969.

2. Kirk-Othmer Encyclopedia of Chemical Technology. 2nd Ed. Vol 12. New York, John Wiley and Sons. 1967. p. 414-459.

3. Screening Study for Emissions Characterization From Lime Manufacture. Vulcan-Cincinnati. Cincinnati, Ohio. Prepared for U.S. Environmental Protection Agency, Research Triangle Park, N.C. Under Contract No. 68-02-0299. August 1974.

4. Evans, L.B. et al. An Investigation of the Best Systems of Emission Reduction For Rotary Kilns and Lime Hydrators in the Lime Industry. Standards Support and Environmental Impact Statement. Office of Air Quality Planning and Standards. U.S. Environmental Protection Agency. Research Triangle Park, N.C. February 1976.

5. Source Test Data on Lime Plants from Office of Air Quality Planning and Standards. U.S. Environmental Protection Agency. Research Triangle Park, N.C. 1976.

6. Air Pollutant Emission Factors. TRW Systems Group. Reston, Virginia. Prepared for the National Air Pollution Control Administration, U.S. Department of Health, Education, and Welfare. Washington, D.C. under Contract No. CPA 22-69-119. April 1970. P. 2-2 through 2-19.

Figure 2 (continued).

assumed to be familiar with the source operations and only to need information about the qualifications placed on the factors. The most important part of an AP-42 section, therefore, is the emission factor table. It must be able to stand alone for use by the informed user. The two principal ingredients in table preparation are as follows:

> Emission factors for as many subcategories as possible. For example, subcategorization by throughput, age of facility, or control device is included. When information does not exist for a particular subcategory, this is stated.
>
> Footnotes qualifying all factors that need special explanation. This can be as brief as a note to be sure to read the text before applying a particular factor.

When the process is simple, a process flow diagram may not be necessary. When needed, it is designed to complement the emission factor table. Terminology used in the table is carried through to the diagram. Sources of emissions not covered in the table, either because the emissions are minor or because the data are unavailable, are included on the flow diagram for the user's information. Other information, such as illustrations instead of blocks in the diagram, is included if it does not detract from the primary purpose of complementing the emission factor table.

The process description explains the flow diagram or gives a very general idea of the process. It is not intended to give a complete explanation of the industry. The description may refer the reader to specific references where this information can be obtained.

The emission and controls section explains the information given in the emissions table. No factors are given in the text that are not given in the table. In the table, a footnote directs the user to specific information in the text that helps to explain an emission factor.

The reference section is extremely important to the user who wishes to apply the emission factor in detail to a specific

source. Although AP-42 does not apply factors to single sources with great accuracy, the factors can be used with the references to develop reasonably accurate information about a specific emission source. A good reference section and a background document containing the basic information allow the user to find specific data sources as needed.

4.2 SUMMARY OF SPECIFICATIONS AND FORMAT DEFINITION

The specification and format topics discussed throughout this document are summarized below. Additional explanations are found in the sections that are noted.

Size. The sections are designed to be updated periodically and are therefore written in discrete units. Authors can make the best use of space by designing the section to fit an even number of pages.

Table format. The emission factor table must be able to stand alone. All emission points and pollutants are contained in the same table. Qualifications of the data are mentioned in footnotes to the table.

References. All data used to develop the emission factors are referenced at the end of the section. It is also desirable to include general references on the industry to supplement the general process description. Only "primary" data sources are referenced. All data sources are traced back to the primary source. Examples of reference format are given in Section 5.6 of this report.

Emission factor file. This file contains the background documents for all AP-42 sections. The background file contains a copy of the final version, all references used in the section, and documentation of all calculations. A more complete description of the reference file is given in Section 4.8 of this report.

Agency/outside review. All new or revised sections must be reviewed within the agency and by outside organizations before release. Several reviews may be conducted within a single review group. Ultimate responsibility lies with the SAS Chief and the Emission Factor Project Officer. A more complete description is found in Section 4.9 of this report.

Data standards/test methods. Minimum standards for data are given in Section 5.1. The quality of the data from acceptable tests is rated by a scale of A to D. When AP-42 sections are revised, all data (including old data) are subject to minimum standards and rated.

Statistical methods. If the number of A-rated source tests is sufficient, B-, C-, and D-rated tests are not used to calculate the emission factor. If the number of A-rated tests is not sufficient, B-rated tests are used. Tests that are C- and D-rated are never combined with A- or B-rated tests; these lower rated tests are used as a last resort only. Tests for each individual facility are reduced to a single value (arithmetic mean), and the arithmetic mean of these values is the emission factor. If the data are suitable for other statistical reduction methods, the use of such methods should be clearly footnoted. These methods are more fully described in Section 5.2 of this report.

Quality rating/statistical confidence. A letter rating system from A to E is applied to individual factors within the emission factor table. This rating system is different from the 0- to 40-point system previously used in AP-42. Although these ratings do not represent a numerical statistical confidence, they do give the user a general idea of the quality of the emission factor. Guidance for the application of these ratings is given in Section 5.3 of this report.

Units. An activity factor is a measurement of source activity; it is multiplied by the emission factor to calculate the emissions from that source. The activity factor that best relates to emissions is used. Consideration is also given to accepted standards of measurement in the industry and in enforcement regulations. Process input is generally preferred over process output as an activity factor. More complete guidelines are given in Section 5.4 of this report.

Nomenclature. Each abbreviation or chemical formula is introduced in parentheses at first mention. The use of vague or general terms is avoided when specific terms can be used. A glossary giving single definitions of terms that are industry-specific is included, and chemical names and pollutant classifications are standardized. Nomenclature guidelines are given in Section 5.5 of this report.

Reporting format. The essence of the section is contained in the emission factor table. Figures, general process description, subsections on emissions and controls, and references complement the emission factor table. Specific format guidelines are given in Section 5.6 of this report. An example of an emission factor report is shown in Figure 2 (page 13).

Figures. A flow diagram relates directly to the emission factor table. Both box and equipment schematics may be used. Control devices generally are not shown in the flow diagram. Additional figures or illustrations relate directly to the flow diagram. More complete guidelines are given in Section 5.7 of this report.

Criteria/noncriteria pollutants. Only emission factors for criteria pollutants are to be added to AP-42; however, other pollutants currently in AP-42 will be retained. Information on hazardous pollutants is placed in the text. More detailed information is contained in Section 5.8 of this report.

Controlled/uncontrolled emissions. Emission factors in AP-42 should represent uncontrolled emissions. Information on controls is contained in the text. More detailed information is contained in Section 5.9 of this report.

Condensibles. Particulate emission factors, except those for lead, represent EPA Method 5 front-half catches. If back-half catch values are reported, they are indicated as such and not as "condensibles." More complete guidelines are contained in Section 5.10 of this report. Lead emission factors are expressed as the total of front- and back-half catches unless otherwise noted. Guidelines for reporting lead are separately contained in Section 5.12 of this report.

Organic emissions. Organic emission factors are reported as nonmethane VOC (NMVOC) and methane. Other information and breakdowns are presented in footnotes or in the text. Complete guidelines are contained in Section 5.11 of this report.

Lead emissions. Lead emission factors will be added to the emission factor tables as sections are prepared or revised. Lead is reported as elemental lead representing both front- and back-half catches of EPA Method 5. Data on chemical compositions or weight-percent of particulate emissions are given in a footnote or in the text.

4.3 GENERAL

This section presents an overview of purposes and objectives to be met during the preparation or revision of an AP-42 section. The three major goals are as follows:

Consideration of the needs of the user

Conformity of the AP-42 section to the existing document

Adequate documentation of all work

4.3.1 User Needs

Throughout the preparation of an AP-42 section, the needs of the user are the primary consideration. These needs include the selection of activity factors that are normally available to the user. The author may break the factor down into several factors, each being more specific to the source. User needs are considered in deciding whether to break down an emission factor, as well as in format decisions, figure presentation, and selection of units.

The author prepares a list of the uses of emission factors contained in the section before beginning its preparation or revision. As the section develops, the presentation is evaluated in terms of these uses.

4.3.2 Document Uniformity

The individual section being prepared is only a small part of a much larger document, AP-42. A new or revised section must conform in many ways to the present emission factor reports.

4.3.3 Documentation

Material included in a new or revised section must be documented. All sections will undoubtedly be revised in the future, and the starting point for these revisions will be the existing

section and its documentation. If the documentation is incomplete, unnecessary problems and potential errors may occur.

Many users take the information in AP-42 as a starting point for research. These investigations may result in future improvements in the factors and are encouraged. The researchers need to trace the factors back to their original source for proper evaluation of the information. Proper documentation of the AP-42 source data is essential to this purpose.

4.4 SOURCES OF EMISSION DATA/DATA COLLECTION

Many potential sources of emission data are investigated in the preparation of an AP-42 section.

Literature search. A literature search for source test and background information is conducted for the emission source in question. This search is conducted through the EPA or other library systems and includes data bases such as the National Technical Information Service.

AP-42 emission factor file. The AP-42 emission factor file is reviewed for all sections being updated. This file is the beginning point for any section update effort. The file contains the background document on each section as well as the references. The background file contains additional pertinent information accumulated by various EPA personnel. The background file is located in the Office of Source Analysis Section of AMTB and is readily accessible to the EPA engineers or to the contractor.

National Emissions Data System. The NEDS point source records located at OAQPS, National Air Data Branch (NADB)* yield information on distributions of various kinds of process equipment and control devices. The NEDS are also used to identify plants where source tests have been performed, as well as to identify states that have developed their own emission factors for a given Source Classification Code (SCC) category. Several select and sort options are available to retrieve needed information.

---

* The National Air Data Branch is located at Research Triangle Park, North Carolina 27711. The phone is (919) 541-5491.

EPA research laboratories. The various EPA research laboratories may engage in work and produce reports that contain emission factor information. These laboratories include the Environmental Monitoring and Support Laboratory (EMSL) in Cincinnati, Ohio, and Research Triangle Park (RTP), North Carolina; the Industrial Environmental Research Laboratory in Cincinnati and RTP; and the Environmental Sciences Research Laboratory (ESRL) in RTP. Although often more research oriented than the Emission Standards and Engineering Division, these research laboratories develop and report emission data that are usable in AP-42.

The IERL at RTP maintains a computerized file on source tests called the Environmental Assessment Data System (EADS). This system contains data on particle size and control technology, as well as other information that is useful in the preparation of an AP-42 section.

SAS maintains a liaison with EPA research laboratories and has input to them with regard to emission factor data needs. The SAS liaison collects data from these units by obtaining copies of monthly highlights, attending briefings and seminars put on by the laboratories, and maintaining an active liaison with specific personnel working in project areas of interest to SAS.

Information gathered for NSPS development. The Emission Standards and Engineering Division is responsible for promulgating New Source Performance Standards. Toward this goal, ESED produces both a Stationary Source Environmental Impact Statement (SSEIS) and numerous backup source test reports.

The ESED monthly reports are reviewed for data on the industry in question. In addition, the Industrial Studies Branch (ISB) maintains a backup file of articles on each source category for which standards are being developed. This file is checked for information that may be pertinent to the AP-42 section development.

Trade associations. Trade associations, which are usually aware of AP-42 and its uses, generally possess the most current process information available and may have information on successful process modifications and control devices. They are usually willing to supply information when it is available. They are to be consulted for comments on the draft review of the section.

EPA regional offices. The EPA regional offices can be approached for general data and source test reports if there is reason to believe such data exist. This source of data is pertinent when a region contains a disproportionate number of a particular source category. Examples would be anthracite coal in Region III, sulfite paper mills in Regions I and X, and bagasse-fired boilers in Regions IV and IX.

The initial request for information is directed to the SAS project officer, who makes the initial contact with the regional office. Specific information should be requested in the initial contact. It is helpful to find a contact who has visited a number of the sources of concern; this person can offer invaluable, detailed information (on equipment configurations, control devices, and emissions) that may not be available from source tests or general literature. The EPA regional office personnel involved in surveillance and analysis (S&A) are helpful for this reason.

State air pollution control agencies. State agencies are contacted if a source category is concentrated in the state. Initial contact is made with the head of the agency. As with regional offices, it is desirable to find a contact who has visited several of the sources of concern. [Office of Management and Budget (OMB) regulations dictate that no more than 10 state agencies may be contacted with the same request.] When directly soliciting states for information, all states may be contacted via the respective regional offices.

Contractor expertise. Certain contractors may have acquired expertise in the field because of past work relating to a source category. This expertise can be of assistance to the author in the preparation or revision of an AP-42 section.

Other EPA branches. Other divisions of EPA, such as the Division of Stationary Source Enforcement (DSSE), should be contacted for information on the source category.

4.5 DATA REDUCTION

Data gathered for emission factor development come from many sources and in many forms. The quality of the data varies from precise to an educated guess. Standard methods are used in the reduction of these data to a single-value emission factor. The data reduction is well documented, and the user is informed of deviations from the procedures set forth in Sections 5.1, 5.2, and 5.3.

Section 5.1 presents minimum standards for test data. Acceptable data are rated from A to D depending on the quality of the data. This rating system is outlined in Section 5.1. All similarly rated tests from a facility are combined by computing the arithmetic mean of the data.

Data from different facilities with similar quality ratings are combined by computing the arithmetic mean of the data. Rules for combining data with different quality ratings are outlined in Section 5.2.

A letter rating system ranging from A to E is applied to the emission factor table. Although this emission factor rating is influenced by the test data rating, it is a different rating system. Rules for applying this subjective rating are contained in Section 5.3.

4.6 DATA PRESENTATION

The essence of an AP-42 section is contained in the emission factor table. This table (including footnotes) is prepared before either the figures or the text. The process flow diagram relates directly to the emission factor table. The flow diagram may show process operations not listed in the emission factor table if there are no emissions from the process operation, but all processes listed in the emissions factor table are shown in the flow diagram. Other illustrations are included if they relate directly to the flow diagram. The text relates to both the emission factor table and to the process flow diagram.

The units of measurement chosen are those that best relate to emissions and that are reasonably available to the user. Both metric units and English units are used; English units are generally used first, followed by the metric equivalents. Abbreviations and chemical formulas are used, but their full meaning is always indicated at first usage. Specific process jargon is avoided unless fully explained.

A more complete guide to data presentation is given in Section 5 of this report.

4.7 GENERAL INDUSTRY INFORMATION

Although general industry information is not the primary purpose of AP-42, some information helps in the application of the emission factors. The aim of the general industry information is to familiarize the user with the basic workings of the source category--what it does, how it does it, what raw materials it uses. The description is usually quite brief, consisting of a page or less. The references provide a more detailed description of the industry should the user wish to consult them. The author assumes in preparing an AP-42 section that the user has no prior knowledge of the specific source category. The author may assume that the reader has an engineering background and is knowledgeable in the subject of emissions from air pollution sources.

4.8 BACKGROUND FILES

The emission factor file is maintained by AMTB in Durham, North Carolina. The emission factor file is the file in which SAS/AMTB keeps all of its records on AP-42. It consists of a background file for each AP-42 section. The AP-42 section background file contains all information maintained by SAS/AMTB for a single AP-42 emission factor report or section.

A section background file contains the following information:

The section reference file, which contains documents that are directly referenced in AP-42.

Unreferenced documents, reports, articles that provide supplemental information on processes reported in AP-42.

New documents, reports, and data placed on file for use in making future revisions.

The emission factor documentation, which shows the data and calculations used to produce the emission factors. This document is prepared by the author of the section and submitted at the same time as the draft of a new or revised section.

A copy of the AP-42 section, as it appears in the published document.

The emission factor documentation submitted by the author provides a record of the sources of data, the data used to produce the factor, and the actual calculations. Specifically, the emission factor documentation contains the following:

A list of the references from which the factor data were taken (also listed in the AP-42 section). Only primary documents are used.

A list of all data, with specific references to page or table numbers.

A complete record of all calculations, including units.

A complete record of all assumptions, technical procedures, and rationale used in calculating or reducing the data.

The emission factor documentation is a complete and adequate record of how each emission factor was produced. A copy of the documentation is provided to persons who call or write requesting such information.

The purpose of the AP-42 section background file and parent emission factor file is twofold: quick location of supporting references when the applicability or accuracy of factors is questioned, and knowledge of the background and basis of the current factors when deciding whether new data make changes necessary.

Data and references are filed according to the section numbering system used in AP-42. Each section folder contains the following information on its cover:

Chapter and section names and numbers.

A list of the references cited in the section and contained within the folder.

A list of on-the-shelf references, such as AP or APTD documents, and of textbooks that are commonly available and whose inclusion in the section would be redundant. All references must, of course, be primary references.

A list of references found elsewhere in the reference file (with location).

A list of those references that cannot be found, such as old or out-of-date publications and personal communications.

A list of documents, such as bulky test reports and contract reports, that can be found in other, clearly designated sections of the emission factor files (e.g., special contract section, source test report section, etc.).

All references for a section are accounted for in one of the above categories. The references themselves are clearly identified (title, author, date, page, etc.) and numbered, with the corresponding date of the AP-42 revision in which they are used plainly included in the heading.

The reference file includes as many of the referenced documents as possible. For instance, transcripts are made of personal communications. When only a few pages from a lengthy reference are cited, they are copied and included in the file. When pertinent source test results are summarized in a few pages, this information is copied and included. The advantage of copying tables, graphs, and test results is the ability to indicate the information that is used directly on the reference. This saves time (and may alleviate ambiguity) when someone else revises the section at a later date. Background documents and calculations produced during the development of the section are also included in the section background file.

4.9 AGENCY/OUTSIDE REVIEW

After the draft section is prepared, it is reviewed by the Project Officer and the SAS Chief. This review is for technical clarity, accuracy, and thoroughness. The author continues to

incorporate suggestions until the section is approved. During this time, the section is also reviewed by other people within SAS.

The draft section is then sent for review outside of SAS. This review is handled by SAS or is delegated to the contractor. The review is performed by some or all of the reviewers discussed in the following paragraphs.

The draft sections are reviewed by air pollution control personnel as well as by industry. At least two such reviews are desirable. Persons are selected to review a section depending on the source category in question. Within EPA, other units or laboratories are asked to review the section if they supplied any of the data that were used.

Other reviewers include EPA regional offices and state agencies that have a particular expertise. Trade associations are also approached for review comments. The Encyclopedia of Associations can be consulted, if an appropriate association is not already known.* In general, anyone who supplied data for the section is asked to review the draft report.

When no outside group has expertise in a particular category--fireplaces, for example--outside review is unnecessary.

4.10 FINAL REVISION

The author reviews all comments and incorporates valid ones into the section. When significant changes are made in response to review comments, a second draft is circulated for outside review. All comments and recommendations are seen by the SAS project officer, who approves any proposed revisions. The author makes approved changes before submittal.

---

*Encyclopedia of Association. 12th ed. Vol. 1: National Organizations of the United States. Gale Research Company, Detroit, Michigan, 1978.

Upon incorporation of the comments, the Project Officer and the SAS Chief again review the section and give final approval. The final approved verion is then sent for publication. During section revision, the emission factor documentation is completed. This documentation is submitted to SAS for inclusion in the background file when the final approved version is submitted.

SECTION 5

TECHNICAL SPECIFICATIONS AND RATIONALE

Because the AP-42 document consists of many sections produced at different times by different authors, uniform reporting practices are essential. This section sets forth reporting standards and reporting specifications to be followed in data collection, units, nomenclature, reporting format, and figure presentation. Technical guidance and rationale are provided for those areas of concern for which specifications cannot be described.

5.1 DATA STANDARDS/TEST METHODS

Emission factors in AP-42 are based on data obtained from several sources, including published technical papers and reports, documented emission testing results, and personal communications. Data provided by individual sources vary from single values, to ranges of minimum and maximum values, and finally to data from replicated source tests. Some data sources provide complete details about their collecting and analyzing procedures, whereas others provide only sketchy information in this regard.

The author selects data on the basis of the quantity and quality of data that are available. The following data are always excluded from consideration:

1. Test series averages reported in units that cannot be converted to the selected reporting units (see Section 5.4).

2. Test series representing incompatible test methods (i.e., comparison of EPA Method 5 front-half with EPA Method 5 front- and back-half).

3. Test series of controlled emissions for which the control device is not specified.

4. Test series in which the source process is not clearly identified and described.

5. Test series in which it is not clear whether the emissions measured were controlled or uncontrolled.

If there is no reason to exclude particular data from consideration, each data set is assigned a rating. A rating system is needed because some data are used when little other information is available, but are excluded when sufficient high-quality data exist. The data are rated as follows:

A - Tests performed by a sound methodology and reported in enough detail for adequate validation. These tests are not necessarily EPA reference method tests, although such reference methods are certainly to be used as a guide.

B - Tests that are performed by a generally sound methodology but lack enough detail for adequate validation.

C - Tests that are based on an untested or new methodology or that lack a significant amount of background data.

D - Tests that are based on a generally unacceptable method but may provide an order-of-magnitude value for the source.

The author uses the following criteria to evaluate source test reports for sound methodology and adequate detail:

1. Source operation. The manner in which the source was operated is well documented in the report. The source was operating within typical parameters during the test.

2. Sampling procedures. If actual procedures deviated from standard methods, the deviations are well documented. Procedural alterations are often made in testing an uncommon type of source. When this occurs, an evaluation is made of how such alternative procedures could influence the test results.

3. Sampling and process data. Many variations can occur without warning during testing, and sometimes without being noticed. Such variations can induce wide deviations in sampling results. If a large spread between test results cannot be explained by information contained in the test report, the data are suspect and are given a lower rating.

4. Analysis and calculations. The test reports contain original raw data sheets. The nomenclature and equations used are compared to those specified by EPA, to establish equivalency. The depth of review of the calculations is dictated by the reviewers' confidence in the ability and conscientiousness of the tester, which in turn is based on factors such as consistency of results and completeness of other areas of the test report.

An A-rated test may be a stack test, a material balance, or some other methodology, as long as it is generally accepted as a sound method of measuring emissions from that source. In some cases (e.g., some VOC sources), a material balance calculation may be rated A and a stack test may only be rated B or C.

Because only one combined value is used to calculate the AP-42 emission factor for each facility, only the results of tests of equal rating are retained when multiple-series tests are run at the same facility.

Although the rating system described above is subjective, it provides a basis for excluding poor data when sufficient good data are available. The compiler also attempts to ascertain how representative the tested facility is of the entire industry. For example, source tests performed for the preparation of New Source Performance Standards (NSPS) may not be representative of the industry as a whole. If a substantial portion of the data used in the derivation of an emission factor comes from NSPS tests, this fact is footnoted at the bottom of the emission factor table.

When an AP-42 section is revised, the data standards are applied to the data used to calculate the current factor. Because some potentially good data may have been excluded as a result of poor documentation in the past, all new data is clearly

documented and the reasons for the A through D ratings clearly stated in the background information. When data rated lower than B are used in calculating an emission factor, the table is footnoted with an explanation of any limitations the emission factor may have.

5.2 STATISTICAL METHODS

The AP-42 emission factors are based on data from published and unpublished reports, technical papers, and personal communications with individual investigators. Emission data extracted from the source documents may have been determined by emission source testing, material balance, or engineering analysis.

The emission factors thus represent statistical averages or single values that have been determined by engineering judgment to be representative of the available data for a specific source category.

In the ideal situation, a large number of A-rated source test sets representing a cross section of the industry are reduced to a single value for each individual source by computing the arithmetic mean of each test set. The emission factor is then computed by calculating the arithmetic mean of the individual source value. No B-, C-, or D-rated test sets are in the calculation of the emission factor because the number of A-rated tests is sufficient. This ideal method of calculating an emission factor is not always possible because of lack of A-rated data.

The number of A-rated tests needed to represent a cross section varies among industries. The following variables influence this number.

1. The total number of facilities in the Nation (sample size vs. total population)

2. The variability of emissions within the industry

3. The variability of emissions within each facility

4. The representativeness of the sample of the total industry

Because this judgment is subjective, the rationale behind the decision is documented in the background information. If possible, estimates of these variables are made. At a minimum, the author attempts to estimate the total number of facilities in the Nation.

Specific data that are included in the background document include but are not limited to the following.

1. Number of facilities tested

2. Estimate of number of facilities in the United States

3. Range of emissions in the United States (minimum, maximum)

4. Range of emissions for each facility tested (minimum, maximum, and number of tests)

5. A description of how the sample was chosen (i.e., random, tests for NSPS, etc.) and an estimate of whether this may cause bias in the data.

If the number of A-rated tests is so limited that the inclusion of B-rated tests would improve the emission factor, then B-rated test data are included in the compilation of the arithmetic mean. No C- or D-rated test data are averaged with A- or B-rated test data. The rationale for inclusion of any B-rated test data is documented in the background information. As more A-rated test data become available, the B-rated test data are dropped from the emission factor calculation. A footnote is added to the emission factor table to inform the user of the limitations on the emission factor.

If no A- or B-rated test series are available, the emission factor is the arithmetic mean of the C- and D-rated test data. When C- and D-rated test data are used, limitations on the use of the emission factor are clearly footnoted in the emission factor table. The C- and D-rated test data are used only as a last resort, to provide an order-of-magnitude value.

Throughout the statistical process, test results at an individual source are reduced to a single value by using the arithmetic mean, and individual source emission factors are combined by computing the arithmetic mean. In some industries, the median may more accurately represent an "average" value. In these cases, the more correct statistical method is used; the rationale for its use is documented in the background information and a footnote is added to the emission factor table. In the absence of such a footnote, the user can conclude that the emission factor represents an arithmetic mean.

The author attempts to reduce the data to a single emission factor rather than a range of values. Should the ranging values lend themselves to categorization, the author may present several emission factors that are based on a facility variable (e.g., age, throughput, fuel).

5.3 QUALITY RATING/STATISTICAL CONFIDENCE

In AP-42, emission factors for each criteria pollutant emitted from each of the emission points associated with an industrial process are grouped into a single table. The reliability of these emission factors is indicated by an overall Emission Factor Rating ranging from A (excellent) to E (poor). These ratings take into account the type and amount of data from which the factors were calculated.

The use of a statistical confidence interval may seem desirable as a more quantitative measure of the reliability of an emission factor. Because of the way an emission factor data base is generated, however, prudent application of statistical procedures precludes the use of confidence intervals unless the following conditions are met:

> The sample of sources from which the emission factor was determined is representative of the total population of such sources.

The data collected at an individual source are representative of that source (i.e., no temporal variability resulting from source operating conditions could have biased the data).

The method of measurement was properly applied at each source tested.

Because of the almost impossible task of assigning a meaningful confidence limit to the above variables and to other industry-specific variables (i.e., variability in determining fuel characteristics), the use of a statistical confidence interval for an emission factor is not practical. Therefore, some subjective quality rating is necessary. The following emission factor ratings are applied to the emission factor table.

A - Excellent. Developed only from A-rated test data taken from many randomly chosen facilities in the industry population. The source category* is specific enough to minimize variability within the source category population.

B - Above average. Developed only from A-rated test data from a reasonable number of facilities. Although no specific bias is evident, it is not clear if the facilities tested represent a random sample of the industries. As in the A rating, the source category is specific enough to minimize variability within the source category population.

C - Average. Developed only from A- and B-rated test data from a reasonable number of facilities. Although no specific bias is evident, it is not clear if the facilities tested represent a random sample of the industry. As in the A rating, the source category is specific enough to minimize variability within the source category population.

D - Below average. The emission factor was developed only from A- and B-rated test data from a small number of facilities, and there may be reason to suspect that these facilities do not represent a random sample of the industry. There also may be evidence of variability within the source category population. Limitations on the use of the emission factor are footnoted in the emission factor table.

---

*Source category: A category in the emission factor table for which an emission factor has been calculated; generally a single process.

E - Poor. The emission factor was developed from C- and D-rated test data, and there may be reason to suspect that the facilities tested do not represent a random sample of the industry. There also may be evidence of variability within the source category population. Limitations on the use of these factors are always footnoted.

Because the application of these factors is subjective, the reasons for each rating is documented in the background information. The ratings of A through E no longer represent the 0- to 40-point system previously applied to the entire emission factor table.

The calculation of individual confidence limits for all variables associated with an emission factor for use as the basis of the A to E ratings is encouraged if the author wants to do so. Documentation for this determination is presented in the background information.

5.4 UNITS

An emission factor is an estimte of the rate at which a pollutant is released to the atmosphere as a result of some activity, divided by the level of that activity (activity factor). The units chosen for an activity factor depend on the data available to the user and the data available to the person preparing the emission factor. The activity factor chosen depends on how the industry in question tabulates production data and on how emission tests were performed. Units may be as various as "tons solvent in ink," "tons of wood treated," and "bales of cotton." When both input and output rates are readily available from the industry, the rate that best relates to emissions and is most available to the user should be selected.

With a few exceptions, values throughout AP-42 are presented in both English and metric units. The most notable exception is the NEDS Emission Factor Listing in Appendix C, which is in English units only. Other exceptions are isolated cases where only English or only metric units are presented. The Federal

Government encourages the use of the modernized metric system (the International System of Units, better known as SI units) in all Federal documents unless otherwise specified.

The following guidelines are followed when choosing an activity factor.

1. Use the one that best relates to the pollutant emitted.

2. Give preference to accepted standards of measurement to which the user has easy access.

3. Give consideration to units specified in enforcement regulations.

4. Give preference to process output units over process input units.

When an appropriate activity factor has been decided upon, the author obtains the approval of the Project Officer.

In certain industries, the most appropriate activity factor or factors for more source-specific breakdowns is available to some users but not to others. In these cases the activity factor is given for the overall facility, with source-specific breakdowns if information is available. One of the dual factors is labeled as "preferred" to avoid confusion or double counting.

English units are used first, followed by the equivalent Metric units in both the text and tables. Although this order is preferred, the author does not choose units that the user must convert for common usage. For example, the author retains such accepted units as "g/mi" for mobile source emissions. English units are given in units that conform to the National Emission Data System (NEDS).

Metric units conform to those set forth in the Standard for Metric Practice.* A unit that is no longer accepted is the metric ton (MT); the equivalent megagram (Mg) is a standard unit.

---

*Standard for Metric Practice. American Society for Testing and Materials, Philadelphia. Revised July 1976 and September 1977.

5.5 NOMENCLATURE

"Nomenclature" refers to the set of terms and symbols used throughout AP-42. Each industry may support a vocabulary of terms (jargon) that is entirely unique and specific, but some industries also share a common terminology.

Terms and symbols that are used to signify different things or concepts may confuse the reader. The following nomenclature guidelines are used to minimize this confusion.

1. Introduce each abbreviation or chemical formula within parentheses at first mention--sulfur dioxide (SO_2); thereafter, use the abbreviation or formula freely except at the beginning of a sentence or in a title.

2. Avoid the use of vague or general terms where specific terms, or the addition of qualifying adjectives, would produce greater clarity.

3. Include a glossary at the end of each section before the list of references. Give simple definitions of terms that are part of the jargon or special vocabulary of the process being described, or of common terms that have different meanings in that context. As with abbreviations or chemical formulas, do not use any jargon without first giving its equivalent technical term or a definition.

4. Standardize the chemical names that appear in the emission factor tables.

5. The term "hydrocarbon" is no longer used to identify the overall group of pollutants now identified as Volatile Organic Compounds (VOC's). Consult Section 5.11, Organic Emissions, for proper terminology.

6. Include legal definitions that are necessary to the proper use of the factor in an emission inventory. Definitions of terms used throughout the document (such as VOC) are not necessary.

5.6 REPORTING FORMAT

The format of AP-42 is such that each section can be easily updated, republished, and distributed. This format permits revision of the parent report as new data become available. An example of a typical AP-42 section is given in Figure 2 (page 13).

AP-42 is a compilation of emission factor reports. Each emission factor report is organized as follows:

General description of the process

Discussion of emissions (and occasionally typical control devices)

Emission factor tables (contained in the emission discussion section)

List of references

The tabulated emission factor data contained in the emission discussion section comprise the primary offering of the document, essentially standing alone as far as technical content is concerned. The text, illustrations, and flow diagrams explain and qualify the tabulated emission factor data. In addition to the standard format, some sections contain detailed process descriptions and tables. Section 7.1 of AP-42, Primary Aluminum Production, is an example of such a section.

The mobile source section does not follow the section format outlined here. The large number of variables involved in mobile source emissions requires the use of numerous emission factors and other tables.

The EPA has no single, authorized, definitive guidance on publication format, grammar, punctuation, rhetorical style, or editorial policy. The general format to be followed in the figures, tables, references, and footnotes is the so-called ORD format, which is that specified by the Handbook for Preparing Office of Research and Development Reports.* The format this document specifies is not completely consistent with that used in AP-42; where a conflict occurs, the author follows the format used in the most recently released AP-42 supplement.

---

* Handbook for Preparing Office of Research and Development Reports, Revised, EPA-600/9-78-32, U.S. Environmental Protection Agency, Office of Research and Development, Cincinnati, Ohio 45268, December 1978.

The following format guidelines are to be applied:

1. Submit the draft section as it would look in final form. Type is IBM Selectric Prestige Elite, space-and-a-half. Currently, AP-42 is printed on 8 x 10-1/2 inch paper, but it is likely the next edition will be on 8-1/2 x 11 inch paper; consult the Project Officer for guidance on paper size.

2. Submit tables and figures on separate pages. Figures are fit on 8 x 10-1/2 inch paper with proper margins. See Section 5.7, Figures, for more information. Tables will be composed by EPA prior to printing.

3. Figures complement the emission factor tables. The text complements the figures and tables. The "Emissions" section fully explains the emission factor tables. The "Process Description" section fully explains the flow diagram.

4. All references are primary references only (the original source of the data), and they are included in the background document.

References and footnotes to tables and text credit the source of the information and guide interested users to more information on the subject. One common referencing error is the failure to supply sufficient information to direct the emission factor user to the referenced material. Another error is the failure to cite the primary source of the material, as opposed to a source that obtained the information from some other source. References that are consistently clear and direct are of the most use to readers and future researchers.

Telephone conversations are not generally cited as references. If used, a record of the conversation is written and placed in the background file.

The following are selected examples of the reference format used in AP-42.

Legislation--

The Rehabilitation Act of 1973, §504, 29 U.S.C. §794. Federal Register Notice (Vol. 36, p. 6934).

Federal Certification Test Results for 1971 Model Year, 36 FR 6934, April 10, 1971.

Code of Federal Regulations Notice (Title 40, Part 60, Subpart N): "Standards of Performance for Iron and Steel Plants," 40 CFR 60.N.

EPA Publications--

With EPA number:

J. A. Peters and T. R. Blackwood, Source Assessment: Beef Cattle Feedlots, EPA-600/2-77-107, U.S. Environmental Protection Agency, Research Triangle Park, NC, June 1977.

One of a bound collection of papers:

D. C. Henderson, "Commercial Bakeries as a Major Source of Reactive Volatile Organic Gases," Emission Inventory/Factor Workshop: Volume I, EPA-450/3-78-042a, U.S. Environmental Protection Agency, Research Triangle Park, NC, August 1978.

With contract number:*

Particulate and Lead Emission Measurements From Lead Oxide Plants, EPA Contract No. 68-02-9999, Bimbo Research Corp., Dayton, OH, August 1973.

Source test:

Source Testing of a Waste Heat Boiler, EPA-75-CBK-3, U.S. Environmental Protection Agency, Research Triangle Park, NC, January 1975.

With three or more authors:

V. S. Katari, et al., Trace Pollutant Emissions From the Processing of Metallic Ores, EPA-650/2-74-115, U.S. Environmental Protection Agency, Research Triangle Park, NC, October 1974.

Unnumbered:

S. Wyatt, et al., Preferred Standards Path Analysis on Lead Emissions From Stationary Sources, Office of Air Quality Planning and Standards, Research Triangle Park, NC, September 1974.

* Some older EPA documents do not have an EPA report number. Only these older documents may be referenced by contract number.

Periodical--

R. E. Lee, et al., "Concentration and Size of Trace Metal Emissions From a Power Plant, a Steel Plant, and a Cotton Gin," Environmental Science and Technology, 9(7): 643-647, July 1975.

Paper--

P. L. Taylor, "Characterization of Copper Smelter Flue Dust," Presented at the 69th Annual Meeting of the Air Pollution Control Association, Portland, OR, June 1976.

Book--

K. J. Yost, et al., Flow of Cadmium and Trace Metals, Volume I, Purdue University, West Lafayette, IN, June 1973.

Private Report--

Final Report of the API Task Force on Used Oil Disposal, American Petroleum Institute Committee on Air and Water Conservation, New York, NY, May 1970.

Privileged Information--

Confidential test data from a major steel producer, Environment Specialists, Ltd., Cincinnati, OH, December 10, 1941.

Personal or Official Conversation--

Written (or Telephone) communication from (or between) Gerald Gipson, U.S. Environmental Protection Agency, Research Triangle Park, NC, and (or to) John Doe, Bureau of Mines, U.S. Department of the Interior, Washington, DC, September 15, 1947.

5.7 FIGURES

Figures provided in AP-42 include process flow diagrams, nomograms and graphs, and equipment illustrations. Their principal function is to augment the presentation of emission factors and to provide an overview of the processes. The extent of their usage depends entirely on the particular processes discussed.

In AP-42 the purpose of flow diagrams and other illustrations is to assist the user in the proper application of the emission factors. Any figure that directly assists a user to

apply these factors is essential. The author assumes that the user is not familiar with the industry in question, but that he or she has a background in air pollution.

If a process is simple or well known, a process description in the text may be sufficient. If the process is complicated or obscure, a process flow diagram is necessary to assist in the description of the process. If two similar processes have different emission rates, an illustration showing how to distinguish between the processes is presented.

The following guidelines are to be applied in designing process flow diagrams:

1. The flow diagram relates directly to the emission factor table. The terminology is identical, and all emission points listed in the emission factor table are shown in the flow diagram.

2. Either box or equipment flow schematics, or a combination of both, are used.

3. When an equipment schematic is needed and it cannot be presented with sufficient detail within the flow diagram, a separate figure is included with a reference to the flow diagram.

4. In general, controls are not specified on the flow diagram; the location of possible controls, however, and manner of release (e.g., fugitive) is indicated.

5. Inclusion of a process flow diagram or other illustrations is based on whether the information is necessary to apply the emission factors properly.

6. All information on the figures is designed to be clearly legible after final reproduction.

Figure 3 is an example of a process flow diagram employing both box and equipment illustrations. The proper format is the one that best enables the user to apply the emission factors given in the table.

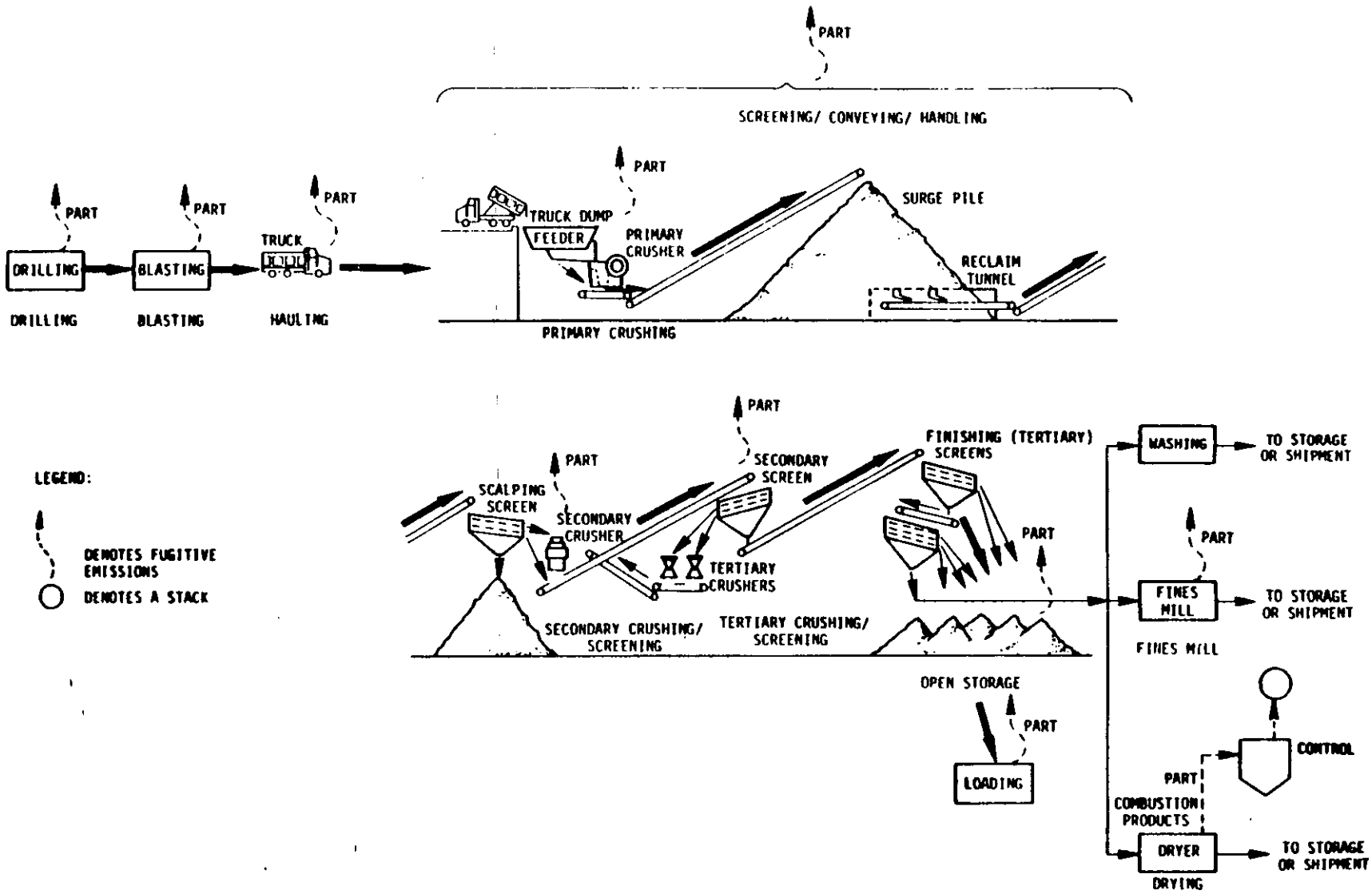

Figure 3. Example of a "standard" figure employing both box and equipment illustrations.

5.8 CRITERIA/NONCRITERIA POLLUTANTS

Criteria pollutants [SO_x, NO_x, HC (VOC), particulates, CO, and Pb] are those air pollutants that, in the judgment of the EPA Administrator, may reasonably be expected to endanger public health or welfare. Through the regulatory process, the U.S. EPA establishes ambient air quality standards for these pollutants. Individual states are responsible for achieving and maintaining these standards through EPA-approved State Implementation Plans (SIP's). The author of an AP-42 section provides emission factors for all criteria pollutants emitted by a source process. To accomplish this goal, the author ascertains what pollutants are emitted and whether data exist to quantify them.

Recently, noncriteria air pollutants have been found to have adverse health effects (i.e., to cause an increase in mortality or serious, irreversible illness). Because ambient air quality standards for criteria pollutants generally do not apply to the control of the noncriteria pollutants, Congress, through the 1977 Amendments to the Clean Air Act, designated certain noncriteria pollutants as hazardous air pollutants. These hazardous pollutants have not been included in AP-42 because they are not covered by ambient air quality standards and are not controlled under SIP's.

Complete emission inventories for hazardous pollutants are generally not available. Although AP-42 now contains emission factors for a few noncriteria pollutants, the document is intended primarily to give emission factors for criteria pollutants. Noncriteria pollutants that are already covered in AP-42 will not be dropped, but no new noncriteria pollutants will be added to the emission factor tables. Information on hazardous pollutants may be included in the text if data are available.

If more specific information on criteria pollutants (such as particle size or chemical composition) will help the user, this information may also be included in the text.

5.9 CONTROLLED/UNCONTROLLED EMISSIONS

Uncontrolled emissions are those that occur beyond the point of product recovery or of process-enriching controls. These emissions are either directed to a pollution control device or emitted directly to the atmosphere as fugitive or stack-discharged emissions. Controlled emissions are those nonfugitive emissions that are emitted from an emission control device.

In some cases, a control device is common to an entire industry and is considered an integral part of a process or system; it is inappropriate to classify emissions from such a device as controlled. Chillers added to solvent operations for vapor recovery and cyclones used to recover catalyst in petroleum catalytic cracker systems are typical of such devices. The primary purpose of the equipment determines whether it is considered a control device or part of the process equipment.

Unless test data are lacking, emission factors listed in AP-42 represent uncontrolled emissions. When AP-42 sections are reviewed, emission factors now listed as controlled will be converted to uncontrolled factors whenever possible. If this conversion would be based on poor data, however, the current factor will be retained.

The text contains information on controls; where appropriate, Control Technique Guidelines (CTG) or other documents are referenced. The text also notes the probability of rapidly developing control technology and the likelihood that typical control efficiencies will change.

When information on typical control efficiencies is included in the text, a range is preferred over a specific number. A control device often reduces emissions of another pollutant in addition to the one for which it was designed. This is known as secondary or coincidental control. For example, electrostatic precipitators (ESP's) have been known to reduce SO_x and lead emissions in addition to particulate emissions. Such secondary

control may be less efficient than that provided for the primary control, but the control is nevertheless real and measurable. Secondary emission reductions are noted in the text.

5.10 CONDENSIBLES

Condensibles are materials that are emitted in the vapor state and later condense to form homogeneous and/or heterogeneous aerosol particles. Condensation depends on three key physicochemical variables: temperature, concentration, and equilibrium vapor pressure. Meteorological conditions in the atmosphere dictate the ambient formation rate of condensed particles. Condensible materials may (1) readily condense to particulate form; (2) condense, then reevaporate; or (3) remain indefinitely in the atmosphere in the vapor state.

Condensible particulates may be organic, inorganic, or a combination of both. They often contain sulfates, polycyclic organic materials (POM), or heavy metals such as lead, cadmium, or arsenic. Condensed materials are more likely to be found in smaller sized particles (<2μm), as measured by ambient sampling methods, than in larger particles (>2μm).

In EPA Method 5, the established method of measuring particulate emissions from stationary sources, emissions are collected in two fractions known as the front- and back-half catches, indicating the section of the Method 5 sampling train in which the particulates are collected.

These two fractions are also often referred to as the filterable and condensible fractions. This distinction is misleading. Filterable particulates are those that are trapped by the fiberglass filter in the front half of the sampling train. Particles ~0.3 micrometer or larger are included in the filterable particulate catch. Materials that condense to solid or liquid form at or above the front-half filtration temperature (120 ± 14°C or 248 ± 25°F) are also included. Smaller particles and vapors (especially water) pass through the filter to a series of cold water impingers in the back half of the train.

Materials that are found in the back-half catch include water and condensed forms of organics, metals, and other chemicals. These materials, like water, pass through the front half of the sampling train as vapors, but condense in the back half where a temperature of near 0°C is maintained in the cold water impingers. The impinger water containing the condensible catch may be washed with chloroform and ether to remove the extractable or organic fraction. The condensibles remaining in the water are known as the nonextractable or inorganic fraction.

Because condensed materials are removed in both the front- and back-half catches of Method 5, the use of the terms "filterable" and "condensible" to describe the two catches is not accurate. Source test evidence, however, suggests that the larger portion of emitted condensed material (by weight) is in the back-half catch. There is also some indication that the back-half collection conditions may cause some chemical or physical changes that would not occur upon reaching standard conditions in the atmosphere.

Filterable particulate emissions, as measured by the front-half catch of Method 5, are normally controlled at the source by systems that operate at temperatures well above ambient levels. This temperature level is necessary to keep water and other materials in a source stream from condensing inside the control device and fouling the operation. Filterable particulates can be controlled efficiently (95% plus) by cyclones, ESP's, fabric filters, and wet scrubbers. The first three systems would have relatively little effect on condensible particulates because they are generally operated at temperatures above 275°F (the upper limit of the front-half of Method 5). Most condensible material would remain vaporized and pass through the control device. Wet scrubbers, however, reduce the gas stream temperature to below 200°F (94°C); thus they could theoretically remove some of the condensible material.

Through new source testing, the EPA and others have found that most industries emit condensible particulates, the amount depending primarily on the specific industry, operating conditions at individual sites, and the trace-element content of the feedstock. Under some conditions the contribution of condensed vapors to total mass emissions can be significant. For example, calculations show that condensed sulfates constitute one-third of the total emitted mass from a coal-fired boiler burning coal with a 10 percent ash content and a 1 percent sulfur content and having a control system with a particulate removal efficiency of 99 percent. In other processes (e.g., smelters) the fraction of total mass emitted from the stack as hot vapors that later condense at cooler ambient temperatures far exceeds the fraction exiting in solid form.

Because the back-half catch may represent different things to different industries, the terms "filterable" and "condensible" are not used in AP-42 to refer to EPA Method 5 front-half and back-half catches. The following guidelines are to be applied in presenting particulate emission factors:

1. When presenting particulate emission factors, report only the front-half catch.

2. Report back-half catches as such if the information is available and would be useful to the reader.

3. Never combine different test methods (front-half, back-half, combination) when calculating an emission factor.

4. If back-half or front- and back-half catches are reported, refer to them as such, not as condensibles.

5. Calculate emission factors for lead as outlined in Section 5.12.

5.11 ORGANIC EMISSIONS

In relation to air pollution, VOC has been defined as any organic compound that, when released to the atmosphere, remains in the gaseous state in the ambient air. The following standards for reporting VOC emissions in AP-42 are to be applied:

1. The terms "hydrocarbon" and "hydrocarbons" are not to be used to name or identify the pollutant in AP-42 factor reporting. The term "volatile organic compounds" is used for this purpose.

2. The factor reports separately the quantity of methane, if it is emitted by a source, and the summed quantity of the gaseous nonmethane organics.

3. The value for both methane and nonmethane organics is the actual weight of the emitted substances. Reporting the equivalent carbon of the nonmethane organic substances by the term "as methane," "as hexane," "as propane," etc., is not acceptable practice.

4. Where the nonmethane substance that is emitted by a process or operation is a known single organic compound, the compound is identified by a footnote to the emission factor table.

5. All AP-42 emission factors for volatile organic compounds will conform to these standards. Background documentation, prepared for AP-42 files maintained by SAS/AMTB, will show that the factors do conform.

6. The AP-42 document will not report any characterization of the organic species for the nonmethane VOC portion of the factor except as specified in 4. Such characterization will be reported as a supplement to EPA-450/3-78-119, the VOC Species Data Manual (known as the KVB report). AP-42 authors are required to report the NMVOC constituent species for entry in a supplement to the VOC Species Data Manual where such information is reported in any reference document that is used in the preparation of the factors.

5.12 LEAD

Lead emissions result from combustion furnace operations, smelting processes, mechanical processing operations, and fugitive dust sources. The most significant source is the combustion of leaded gasoline. Other sources include the combustion of waste oil, the combustion of coal and fuel oil, and the incineration of municipal wastes. Industrial sources include the production of lead alkyls (tetraethyl and tetramethyl lead), primary

and secondary ferrous and nonferrous metals and alloys, lead oxides, lead acid batteries, cable coverings, can soldering cement, type metals, metallic lead products, and leaded glass.

The most common chemical forms of lead emissions from all sources are elemental lead (Pb) or lead oxides (PbO, PbO_2, Pb_2O_3, etc.). Other emissions include lead sulfide (PbS), lead sulfate ($PbSO_4$), lead halide particulates (alpha and beta forms), and organic alkyl lead vapors (tetraethyl lead, tetramethyl lead).

Lead may be emitted as a dust having particle diameters ranging from <1 μg to 150 μm. Particle sizes of 10 μm or less are generally considered to be inhalable and therefore hazardous to health. Lead is also emitted in fumes, mists, and vapors.

Leaded gasoline contains about from 1.0 to 2.5 g of lead per gallon, about 75 percent of which is emitted to the atmosphere through the exhaust. The rest is deposited in the exhaust system or in the crankcase oil. Lead in the crankcase oil may eventually be emitted to the atmosphere if the waste oil is used as fuel.

A standard method for measuring lead emissions at the source has not yet been adopted. At the present time, lead emissions are generally measured at the source by a modified version of EPA Reference Method 5 for particulates. Fiberglass, membrane, or paper filters are used to trap the particulate lead in the front half of the sampling train, and impingers containing nitric acid are used to trap lead condensates in the back half. Lead particulates are then extracted from the front-half catch with nitric acid and combined with the back-half catch to give total lead. Analysis is by atomic absorption.

The following guideline is to be used in the preparation or revision of AP-42 sections describing processes from which lead is emitted.

1. As a section is prepared or revised, incorporate the lead emission factors contained in Appendix E of AP-42 into the emission factor tables of the individual section.

2. Lead emission factors are to be expressed as the weight of elemental lead, not as the weight of the compounds that are actually emitted.

3. The emission factor table is to be footnoted to caution the user not to compare the lead emission weight to the particulate matter emission weight.

4. The lead emission factor is the sum of both the front- and back-half catches of EPA Method 5. If not, indicate the measurement method in a footnote.

5. If data are available on the chemical compounds that are emitted, present this information in a footnote to the emission factor table.

6. If the weight percent of lead compounds in the particulate emissions is known, present this information in a footnote.