MRI REPORT

Development of Particulate Emission Factors for Uncontrolled Abrasive Blasting Operations

Revised Source Test Report

Note: This is a reference cited in *AP 42, Compilation of Air Pollutant Emission Factors, Volume I Stationary Point and Area Sources.* AP42 is located on the EPA web site at www.epa.gov/ttn/chief/ap42/

The file name refers to the reference number, the AP42 chapter and section. The file name "ref02_c01s02.pdf" would mean the reference is from AP42 chapter 1 section 2. The reference may be from a previous version of the section and no longer cited. The primary source should always be checked.

For U.S. Environmental Protection Agency
Office of Air Quality Planning
And Standards (MD-17)

EPA Contract No. 68-D2-0159
Work Assignment No. II-01
MRI Project No. 4602-01

February 7, 1995

MIDWEST RESEARCH INSTITUTE 425 Volker Boulevard, Kansas City, MO 64110-2299 • (816) 753-7600

This document is printed on recycled paper.

MRI REPORT

Development of Particulate Emission Factors for Uncontrolled Abrasive Blasting Operations

Revised Source Test Report

For U.S. Environmental Protection Agency
Office of Air Quality Planning
And Standards (MD-17)
Research Triangle Park, NC 27711

Attn: Ron Myers

EPA Contract No. 68-D2-0159
Work Assignment No. II-01
MRI Project No. 4602-01

February 7, 1995

MIDWEST RESEARCH INSTITUTE 425 Volker Boulevard, Kansas City, MO 64110-2299 • (816) 753-7600

CONTENTS

Preface iii
List of Figures vii
List of Tables viii

1. Introduction 1-1
2. Summary of Results 2-1
3. Facility Description and Operation 3-1
   3.1 Wind tunnel 3-1
   3.2 Blasting Operations and Equipment 3-3
4. Test Matrix and Methodology 4-1
   4.1 Test matrix 4-1
   4.2 Emission test methods 4-1
5. Facility Operation and Source Activity Monitoring 5-1
   5.1 Facility operating data 5-1
   5.2 Source characterization measurements 5-1
6. Emission Test Results 6-1
   6.1 Total particulate emission rate 6-1
   6.2 Metals concentrations 6-2
   6.3 Particle size distributions and size-specific emission rates 6-8
7. Development of Particulate Emission Factors 7-1
   7.1 Particulate matter 7-1
   7.2 Metals 7-5
8. References 8-1

Appendices

A. Description of sampling and analysis procedures A-1
B. List of samples taken for analysis B-1
C. Field sampling data C-1
D. Faculty operating data D-1
E. Calibration data E-1
F. Supplemental source characterization data F-1
G. QA review G-1

LIST OF FIGURES

Number		Page
3-1	Schematic of low speed wind tunnel.	3-2
3-2	Cutaway view of abrasive blaster	3-7
3-3	Illustration of sand blasting equipment	3-8
6-1	Cumulative particle size distributions for clean surface	6-14
6-2	Cumulative particle size distributions for painted surface	6-15
6-3	Cumulative particle size distributions for oxidized surface	6-16

LIST OF TABLES

Number		Page
2-1	Summary of particulate emission factors	2-2
2-2	Summary of emission factors for total metal particulate	2-3
2-3	Summary of emission factors for PM-10 metal particulate	2-4
2-4	Summary of emission factors for PM-2.5 metal particulate	2-5
3-1	Blasting equipment specifications	3-5
3-2	Blasting operating procedures	3-6
5-1	Facility operating data during testing	5-2
5-2	Particle size distribution and abrasion loss of unused abrasive (silica sand)	5-4
5-3	Coating thickness of paint on mild steel cleaned by abrasive blasting	5-5
5-4	Summary of sampling and analysis parameters and methods	5-6
6-1	Summary data and particulate emission results	6-3
6-2	Summary of total particulate metal concentrations	6-6
6-3	Particle size testing results	6-10
6-4	Summary of particulate concentration data obtained during testing	6-17
6-5a	Metal (Cd, Cr, and Fe) analysis results for particle size sampling train	6-18
6-5b	Metal (Mn, Ni, and Pb) analysis results for particle size sampling train	6-20
7-1	Total particulate emission factors	7-2
7-2	PM-10 emission factors	7-3
7-3	PM-2.5 emission factors	7-4
7-4	Summary of total, PM-10, and PM-2.5 cadmium concentrations and emissions	7-6
7-5	Summary of total, PM-10, and PM-2.5 chromium concentrations and emissions	7-7
7-6	Summary of total, PM-10, and PM-2.5 iron concentrations and emissions	7-8
7-7	Summary of total, PM-10, and PM-2.5 manganese concentrations and emissions	7-9
7-8	Summary of total, PM-10, and PM-2.5 nickel concentrations and emissions	7-10
7-9	Summary of total, PM-10, and PM-2.5 lead concentrations and emissions	7-11
7-10	Summary of emission factors for total metal particulate	7-12
7-11	Summary of emission factors for PM-10 metal particulate	7-13
7-12	Summary of emission factors for PM-2.5 metal particulate	7-14

SECTION 1

INTRODUCTION

The 1990 Clean Air Act Amendments (1990 CAAA) require that the emission factors published by the U.S. Environmental Protection Agency (EPA) in the document *Compilation of Air Pollutant Emission Factors* (AP-42) be updated periodically. The EPA has determined that a new section of AP-42 is required to address uncontrolled abrasive blasting, for which emission factors are not currently available. This requires that uncontrolled emission factors be developed for both particulate matter (including PM-10*) and selected heavy metals listed as Hazardous Air Pollutants (HAPs) under the 1990 CAAA.

The objective of this study was to develop uncontrolled fugitive emission factors for abrasive blasting operations. The factors were to be based on actual air emissions data from a pilot-scale test facility within which full-scale abrasive blasting (surface cleaning) was performed. This necessitated the construction and use of a low speed wind tunnel that was large enough to house commercially available abrasive (sand) blasting equipment.

This report presents the results of the study. Conventional EPA stack sampling and analysis procedures were used in each test to determine particulate and HAP metals generated by abrasive blasting. The ten HAP metals consisted of arsenic (As), beryllium (Be), cadmium (Cd), cobalt (Co), chromium (Cr), manganese (Mn), nickel (Ni), lead (Pb), antimony (Sb), and selenium (Se). Iron (Fe) was also determined in the emission testing. Duplicate test runs were conducted at each of nine test conditions covering the nominal range of wind speeds and types of cleaned surfaces.

---

* PM-10 is defined as those particles less than or equal to 10 μm in aerodynamic diameter (equivalent unit density spheres).

Emissions and facility operating data were collected for each test condition. Finally uncontrolled particulate emission factors were developed for each test condition.

The subsequent sections of this report present results for the test as follows:

Section 2.0 Summary of Results
Section 3.0 Facility Description and Operation
Section 4.0 Test Matrix and Methodology
Section 5.0 Facility Operation and Source Activity Monitoring
Section 6.0 Emission Test Results
Section 7.0 Development of Particulate Emission Factors
Section 8.0 References

The appendices provide documentation and supporting data and are organized as follows:

Appendix A Description of Sampling and Analysis Procedures
Appendix B List of Samples Taken for Analysis
Appendix C Field Sampling Data
Appendix D Facility Operating Data
Appendix E Calibration Data
Appendix F Supplemental Source Characterization Data
Appendix G Quality Assurance Review

Raw data sheets have not been included in this report but are available upon request.

SECTION 2

SUMMARY OF RESULTS

Table 2-1 provides an overall summary of the particulate emission factors developed in this study using a low speed wind tunnel facility within which uncontrolled commercial abrasive blasting was simulated. Standard EPA stack sampling and analysis procedures were used to determine particulate emission rates. More detailed information on the test results and facility operating conditions is provided in subsequent sections of this report.

As shown by Table 2-1, the emission factors for total particulate (TP)* matter tend to increase with wind speed for each of the three types of mild steel surfaces blasted. The emission factors for PM-10, on the other hand, show a tendency to decrease when the wind speed exceeds 10 mph. No substantial difference in particulate emissions was observed, however, by either the type of surface cleaned or coating removed by the abrasive.

The emission factors for five HAP metals plus Fe are summarized in Tables 2-2, 2-3, and 2-4 for the TP, PM-10, and PM-2.5 particle size fractions, respectively. Results for the other five metals (As, Be, Co, Sb, and Se) were generally not detected above blank levels.

---

* Because the emissions contained no condensible fraction, the total particulate matter was collected entirely as "filterable particulate" matter.

TABLE 2-1. SUMMARY OF PARTICULATE EMISSION FACTORS[a]

Operating condition	Test runs	Total particulate emission factor (kg/kg sand)	PM-10 emission factor (kg/kg sand)[b]	PM-2.5 emission factor (kg/kg sand)[c]	Result of mass balance (% closure)[d]
Preliminary Test Runs[e]					
5 MPH	5/6	0.30	–	–	110
10 MPH	3/4	0.049	–	–	100
15 MPH	1/2	0.60	–	–	70
Average Emission Factor		0.32			
Clean Surface					
5 MPH	17/18	0.029	0.017	0.0024	100
10 MPH	9/10	0.068	0.0081	0.0022	95
15 MPH	23/24	0.092	0.0045	0.00090	86
Average Emission Factor		0.063	0.0099	0.0018	
Painted Surface					
5 MPH	15/16	0.027	0.0059	0.0010	99
10 MPH	7/8	0.070	0.052	0.00086	98
15 MPH	21/22	0.091	0.0091	0.0013	79
Average Emission Factor		0.063	0.022	0.0011	
Oxidized Surface					
5 MPH	19/20	0.025	0.0057	0.0018	100
10 MPH	11/12	0.026	0.014	0.0011	100
15 MPH	25/26	0.089	0.0030	0.00026	82
Average Emission Factor		0.047	0.0074	0.0011	

[a] All results to two significant figures. Sand blasting only.

[b] Particles ≤ 10 μm in aerodynamic diameter (equivalent unit density spheres).

[c] Particles ≤ 2.5 μm in aerodynamic diameter (equivalent unit density spheres).

[d] $$\text{Percent closure} = \frac{\text{total sand recovered} + \text{total particulate emissions}}{\text{total sand fed to tunnel}} \times 100$$

[e] No target surface—operation of blaster alone.

TABLE 2-2. SUMMARY OF EMISSION FACTORS FOR TOTAL METAL PARTICULATE

Operating condition	Test run	Total emission factor (kg/kg sand)					
		Cadmium	Chromium	Iron	Manganese	Nickel	Lead
Clean Surface							
5 MPH	17/18	1.8e-06	2.5e-06	2.8e-04	1.5e-06	2.0e-06	1.8e-06
10 MPH	9/10	7.0e-07	6.5e-06	5.1e-04	2.9e-06	4.9e-06	1.3e-06
15 MPH	23/24	1.8e-06	9.6e-06	4.2e-04	2.3e-06	8.0e-06	3.9e-06
Average Emission Factor		1.4e-06	6.2e-06	4.0e-04	2.3e-06	5.0e-06	2.4e-06
Painted Surface							
5 MPH	15/16	9.5e-07	4.3e-06	2.9e-04	2.0e-06	2.0e-06	7.1e-06
10 MPH	7/8	1.1e-06	8.7e-06	3.5e-04	4.0e-06	4.7e-06	1.4e-05
15 MPH	21/22	6.3e-06	1.9e-05	5.1e-04	4.0e-06	2.7e-05	2.0e-05
Average Emission Factor		2.8e-06	1.1e-05	3.8e-04	3.3e-06	1.1e-05	1.4e-05
Oxidized Surface							
5 MPH	19/20	6.4e-07	1.4e-06	6.2e-04	4.2e-06	1.3e-06	1.6e-05
10 MPH	11/12	1.2e-06	5.2e-06	1.6e-03	1.2e-05	7.1e-06	7.8e-06
15 MPH	25/26	1.6e-06	7.2e-06	1.3e-03	4.5e-06	8.3e-06	2.3e-05
Average Emission Factor		1.1e-06	4.6e-06	1.2e-03	7.1e-06	5.5e-06	1.5e-05

TABLE 2-3. SUMMARY OF EMISSION FACTORS FOR PM-10 METAL PARTICULATE

Operating condition	Test run	PM-10 emission factor (kg/kg sand)					
		Cadmium	Chromium	Iron	Manganese	Nickel	Lead
Clean Surface							
5 MPH	17/18	1.8e-06	2.4e-06	2.1e-04	1.3e-06	2.0e-06	1.8e-06
10 MPH	9/10	-a	6.4e-06	3.1e-04	2.1e-06	4.4e-06	1.3e-06
15 MPH	23/24	1.3e-06	9.5e-06	2.7e-04	1.6e-06	7.6e-06	3.9e-06
Average Emission Factor		-a	6.1e-06	2.6e-04	1.7e-06	4.7e-06	2.3e-06
Painted Surface							
5 MPH	15/16	4.8e-07	4.0e-06	1.8e-04	1.4e-06	1.9e-06	3.5e-06
10 MPH	7/8	-a	8.0e-06	2.8e-04	3.2e-06	4.2e-06	1.0e-05
15 MPH	21/22	2.9e-06	1.8e-05	3.0e-04	3.0e-06	2.6e-05	7.9e-06
Average Emission Factor		-a	6.1e-06	2.6e-04	1.7e-06	4.7e-06	2.3e-06
Oxidized Surface							
5 MPH	19/20	3.7e-7	1.4e-06	3.8e-04	2.4e-06	1.2e-06	7.0e-06
10 MPH	11/12	-a	5.1e-06	8.2e-04	6.6e-06	6.3e-06	5.6e-06
15 MPH	25/26	2.2e-07	6.9e-06	4.8e-04	2.0e-06	7.8e-06	8.4e-06
Average Emission Factor		-a	4.5e-06	5.6e-04	3.7e-06	5.1e-06	7.0e-06

[a] Cadmium was not detected in any of the particle sizing fractions and therefore the calculations could not be performed.

TABLE 2-4. SUMMARY OF EMISSION FACTORS FOR PM-2.5 METAL PARTICULATE

		PM-2.5 emission factor (kg/kg sand)					
Operating condition	Test run	Cadmium	Chromium	Iron	Manganese	Nickel	Lead
Clean Surface							
5 MPH	17/18	1.4e-06	1.5e-06	1.1e-04	1.5e-07	1.1e-06	1.1e-06
10 MPH	9/10	-a	3.3e-06	2.0e-04	2.4e-07	1.6e-06	1.2e-06
15 MPH	23/24	8.0e-07	5.4e-06	1.8e-04	7.0e-08	3.0e-06	3.9e-06
Average Emission Factor		-a	3.4e-06	1.7e-04	1.5e-07	1.9e-06	2.1e-06
Painted Surface							
5 MPH	15/16	2.1e-07	2.1e-06	1.0e-04	2.9e-06	8.6e-07	2.8e-06
10 MPH	7/8	-a	4.0e-06	1.6e-04	1.2e-06	1.5e-06	5.6e-06
15 MPH	21/22	7.6e-08	7.4e-06	1.5e-04	1.2e-07	8.1e-06	6.3e-06
Average Emission Factor		-a	4.5e-06	1.4e-04	5.4e-07	3.5e-06	4.9e-06
Oxidized Surface							
5 MPH	19/20	3.1e-07	3.2e-07	1.4e-04	4.2e-07	4.2e-07	4.5e-06
10 MPH	11/12	-a	3.0e-06	1.9e-04	2.4e-07	3.4e-06	4.9e-06
15 MPH	25/26	3.1e-09	3.7e-06	2.2e-04	8.6e-08	4.0e-06	6.6e-06
Average Emission Factor		-a	2.4e-06	1.8e-04	2.5e-07	2.6e-06	5.3e-06

[a] Cadmium was not detected in any of the particle sizing fractions and therefore the calculations could not be performed.

SECTION 3

FACILITY DESCRIPTION AND OPERATION

As stated in Section 1, the overall objective of the study was to develop uncontrolled abrasive blasting emission factors for particulate matter (including PM-10). The following describes the pilot-scale test facility (wind tunnel) along with the procedures used to operate the tunnel and collect the facility operating data.

3.1 WIND TUNNEL

A low speed wind tunnel housing abrasive blasting equipment was selected as the pilot-scale test facility to simulate uncontrolled blasting operations in this study. This selection was based on the rationale that a suitably designed wind tunnel: (a) would be of sufficient size to accommodate full-scale abrasive blasting operations; (b) would provide appropriate airflow to simulate typical wind speeds while maintaining near steady-state flow conditions, and (c) would accommodate the use of standard EPA stack testing equipment and procedures. The design and construction of this wind tunnel are described in the following paragraphs and illustrated in Figure 3-1.

The low speed wind tunnel used during testing was 66 ft (21 m) long with an 8- x 8-ft (2.4- x 2.4-m)-square cross section constructed of durable wood materials. Two high capacity, axial blade fans operating in parallel were used to induce airflows through the tunnel at average (centerline) speeds up to approximately 15 mph (6.8 m/s). Each fan was rated at 52,000 cfm at 1.0 in w.c. static pressure at standard conditions using a 20-hp electric motor. Lower airflows near 5 mph (2.3 m/s) and 10 mph (4.6 m/s) were achieved and controlled by reducing the fan rotational speed with different diameter pulleys. Both sides of the fans were screened for safety considerations and equipment protection.

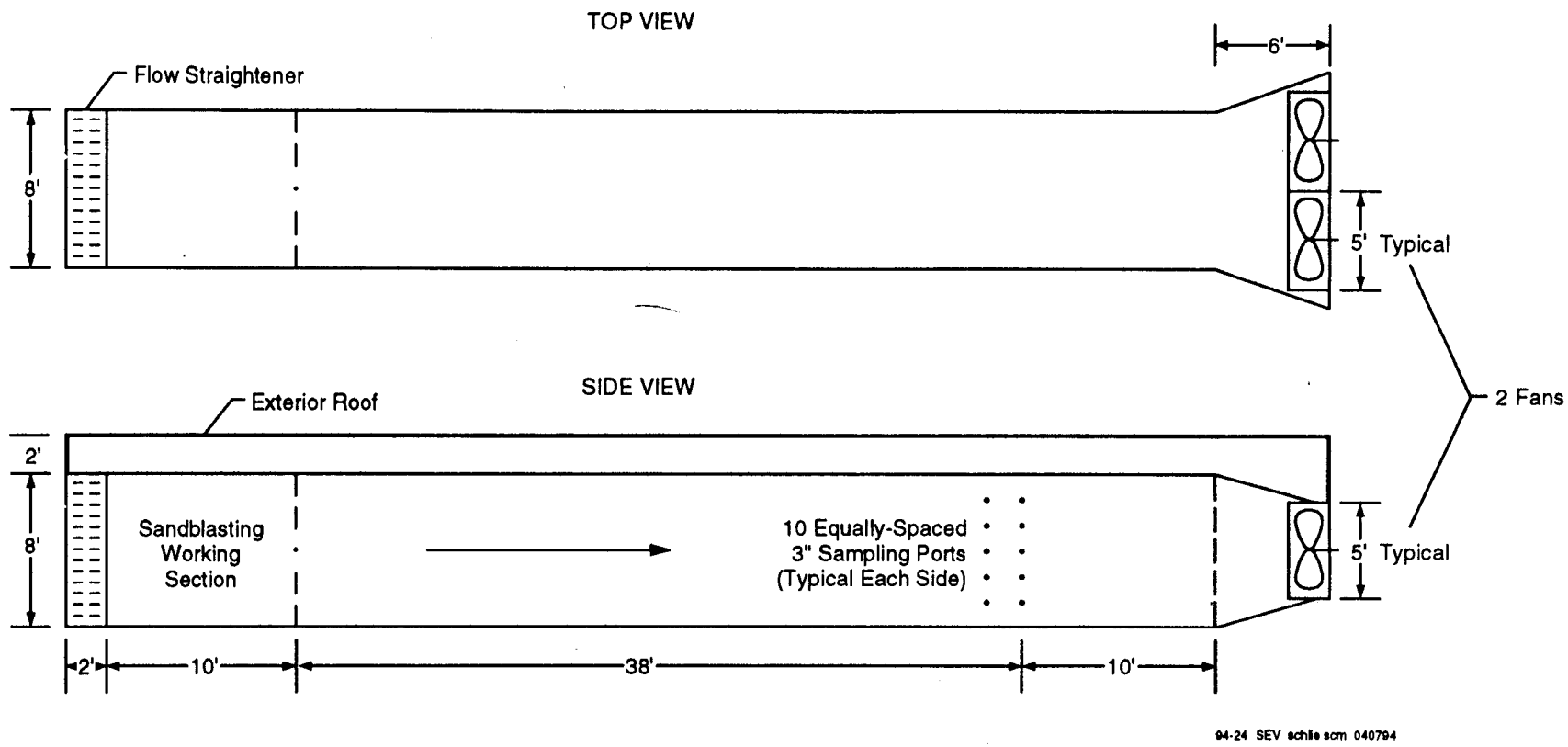

Figure 3-1. Schematic of low speed wind tunnel.

The wind tunnel walls were constructed of marine-grade plywood with standard wood studs used as the basic support structure. The interior seams of the tunnel were sealed with caulk and covered with trim board. A flow straightener 2 ft (0.6 m) in length with 1 ft x 1 ft sq partitions was installed on the inlet to help establish uniform airflow distribution. Doors at each end of the wind tunnel were provided for easy and safe access. Twenty sampling ports were installed in the tunnel walls at 5 equivalent diameters downstream of the blasting area and 1.25 equivalent diameters upstream of the fan per EPA Reference Method 1.

Instrumentation was installed to monitor the key operating parameters of the wind tunnel for documentation and troubleshooting purposes. Voltage and current meters for each fan were provided to monitor electric power. Pressure taps and inclined manometers were provided at two locations to monitor static pressure.

3.2 BLASTING OPERATIONS AND EQUIPMENT

Compressed air was used to propel silica sand onto three types of mild steel surfaces inside the wind tunnel. The metal parts were either painted automobile hoods, clean (previously blast-cleaned) automobile hoods, or heavily rusted tank sides. The automobile hoods were scrap parts from late 1970s to early 1980s vintage General Motors and Ford products coated with an enamel paint typical of the period.

Commercial dry sand blasting equipment was rented especially for use in this project. A professional sand blasting consultant with 30 years of experience was available to train MRI staff in the proper technique and safe operation of the blasting equipment. The consultant had extensive experience with the commercial rental equipment that was used, and was responsible for establishing blasting conditions representative of commercial-scale (i.e., appropriate levels for air pressure and sand feed rate). Subsequently, the blasting equipment was operated consistently during testing at the appropriate air pressure and sand feed rate in a deliberate attempt to stabilize the blasting operation.

During testing, a light inside the wind tunnel signaled the operator to begin blasting operations approximately 1 min prior to the sampling period. Blasting continued throughout the sampling period until the light was extinguished. Clean, filtered breathing air was supplied to a pressurized helmet and cape worn by the

blasting operator. The helmet and cape also protected the operator from rebounding sand particles.

Specifications of the blasting equipment used for testing are presented in Table 3-1; detailed information concerning the blasting operating procedures are presented in Table 3-2; and a cutaway view of the blaster (pot) is presented in Figure 3-2. Illustration of the use of the sand blasting equipment is provided in Figure 3-3, showing the nozzle positioned perpendicular to the airflow.

TABLE 3-1. BLASTING EQUIPMENT SPECIFICATIONS

1. Compressor
   - Rotary screw type
   - Diesel, three-cylinder
   - 90-100 psi

2. Blasting pot
   - 3 ft^3 ≈ 250 lb sand
   - 90-95 psig line pressure
   - Pressure regulator removed to reduce pressure losses
   - Media regulator valve
   - Choke valve to break up media clogs in regulator
   - Safety valve to prevent pressurizing pot during media filling operations

3. Nozzle
   - 85-90 psig at nozzle
   - No. 4, 1/4-in aperture, long venturi
   - Silicon carbide construction
   - 50-ft of 1-in (inside diameter) blast hose
   - 1-in (inside diameter) at hose entrance to nozzle

4. Medium
   - U.S. Silica brand
   - Flint shot sand
   - –30/+50 mesh
   - Packaged in 100 lb bags

TABLE 3-2. BLASTING OPERATING PROCEDURES

1. Before blasting operations:
   a. Compressor was fueled, started, and air lines purged of water condensate.
   b. 700-800 sand stockpiled near blasting pot. Blasting pot was filled with about 250 lb of sand; lines were attached.
   c. Breathing air cartridge was purged of water condensate.
   d. Automobile hoods or rusted steel tank parts were placed inside the wind tunnel working section. Parts were secured to wind tunnel walls with rubber straps, as necessary.
   e. Clock was set to start on 12:00 position.
   f. Blasting operator was suited up and entered the wind tunnel.
   g. Wind tunnel door was closed.
   h. Fans were turned on and current and voltage readings for each fan were recorded.
   i. Weather conditions were recorded.
   j. Weight of sand charged to the blasting pot and sand conditions were recorded.
2. During blasting:
   a. A switch inside the monitoring van turned on the clock and lights inside the wind tunnel.
   b. Blasting operations continued until the lights and clock were turned off.
   c. Blasting operator cleaned the metal parts to a "near-white" condition.
   d. A blasting assistant remained outside, near the wind tunnel working section, to operate the blasting pot choke valve to relieve occasional media clogs, as necessary.
   e. Blasting assistant recorded compressor, air cartridge, and wind tunnel operating conditions.
3. During sampling port changes:
   a. Area previously blasted was measured and recorded.
   b. Blasted parts were turned around or replaced.
   c. Approximately 200 lb of sand was added to the blasting pot.
   d. Air filter cartridge was purged of water condensate.
4. After blasting operations:
   a. Fans were turned off.
   b. Sand-blasted parts were removed from the wind tunnel.
   c. A sample of the residual sand inside the wind tunnel was taken.
   d. Residual sand was cleaned out of the wind tunnel and weighed.
   e. Residual sand inside the blasting pot was cleaned out and weighed.
   f. Final readings were recorded for clock-elapsed time and compressor engine hours.

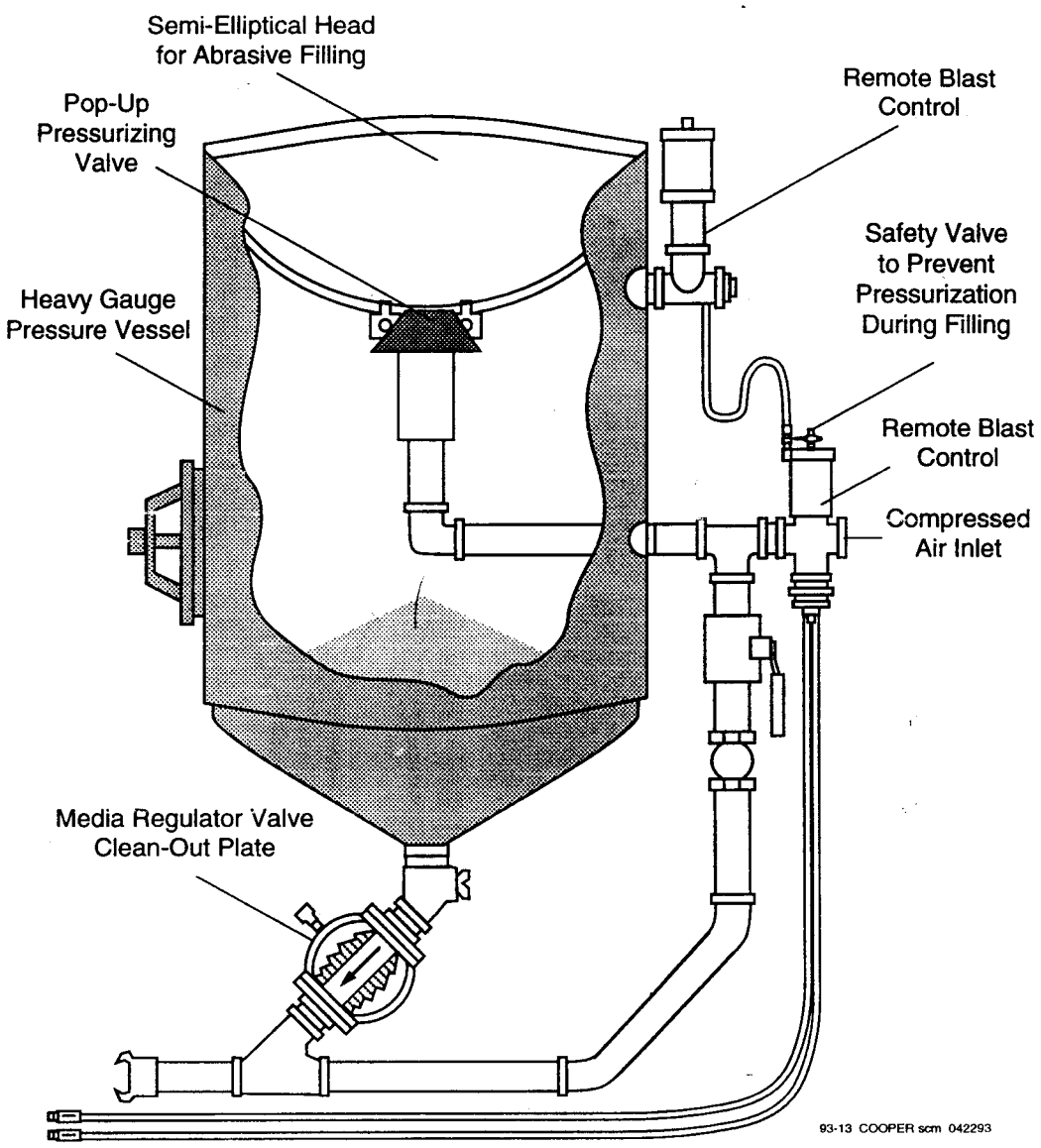

Figure 3-2. Cutaway view of abrasive blaster.

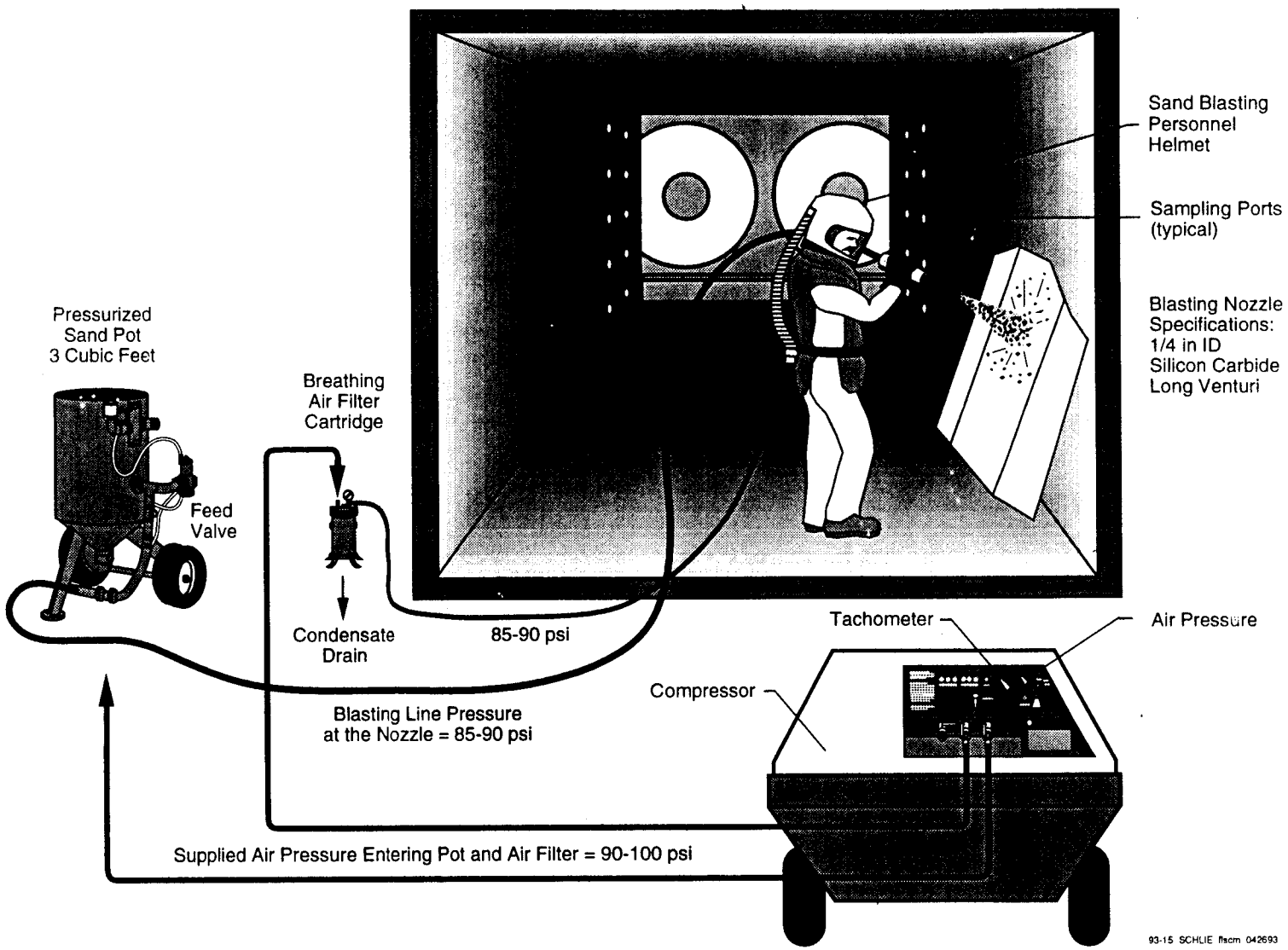

Figure 3-3. Illustration of sandblasting equipment.

SECTION 4

TEST MATRIX AND METHODOLOGY

The experimental matrix and methods used during the wind tunnel tests conducted in the program are described below.

4.1 TEST MATRIX

The experimental design for the study is shown in Table 4-1. The types of surfaces cleaned and the wind velocities achieved during each test series are also specified in Table 4-1 along with the number of runs performed.

As shown in Table 4-1, testing consisted of a total of 24 sample sets encompassing three different wind speeds and three types of mild steel surfaces. Only metal surfaces were evaluated. The test matrix also included duplicate runs of abrasive only (without a target surface) which were used to characterize the "background" dust concentration and composition without the contribution of the surface being cleaned. The tests involved only the use of 30 × 50 mesh silica sand as the blasting medium.

4.2 EMISSION TEST METHODS

The test program consisted of replicate runs for each test condition outlined in Table 4-1 plus the collection and analysis of required quality control (QC) samples. Standard EPA methods were used where possible; these are summarized as follows:

- *Particulate matter emissions* were determined using EPA Reference Method 5, "Determination of Particulate Matter Emissions from Stationary Sources." All weight fractions of the train (front half) were combined to determine total particulate emissions.

TABLE 4-1. EXPERIMENTAL TEST DESIGN FOR DRY ABRASIVE (SAND) BLASTING[a]

Type of surface cleaned	Nominal wind velocity (mph)	No. of test runs/variable	Total test runs	Parameters determined[b]
None[c]	5, 10, 15	2	6	TP, PSD
Clean mild steel	5, 10, 15	2	6	TP, PSD, metals
Painted mild steel	5, 10, 15	2	6	TP, PSD, metals
Oxidized mild steel	5, 10, 15	2	6	TP, PSD, metals
Total tests			24	

[a] A commonly available 30 × 50 mesh silica sand was used.

[b] TP = total particulate matter; PSD = particle size distribution (including PM-10); metals = total and size-specific Sb, As, Be, Cd, Cr, Co, Pb, Mn, Ni, and Se listed as HAPs plus other elements of interest.

[c] Preliminary testing with abrasive only. Abrasive only tests were performed to determine "background" without the influence of any type of cleaned surface. Metals composition of emissions assumed to be identical to bulk sand.

- *PM-10 and particle size distribution (PSD)* were determined using a modified version of EPA Reference Method 201A, "Determination of PM-10 Emissions (Constant Sampling Rate Procedure)." This procedure involves the use of a multistage inertial sizing instrument (Andersen, HCSS), operated at a constant flow rate (Farthing and Dawes, 1988).

- *Hazardous air pollutant (HAP) metals* were determined both on a total and size-specific basis using the EPA multiple metals method, "Methodology for the Determination of Metal Emissions in Exhaust Gases from Hazardous Waste Incineration and Similar Combustion Processes" (EPA/530-SW-91-010, December 1990). Because volatile metals were not expected to be present in the sample collected, the acidified impinger solutions were **deleted** from the sampling and analysis procedure. Materials collected in the sample train were digested using a Parr® Bomb or a microwave digestion technique. Samples were then analyzed using inductively coupled plasma atomic emission spectroscopy (ICP) per SW-846 Method 6010 (EPA, 1986). HAP metals of interest are: arsenic (As); beryllium (Be); cadmium (Cd); chromium (Cr); cobalt (Co); manganese (Mn); nickel (Ni); lead (Pb): antimony (Sb); and selenium (Se). Iron (Fe) was also determined in the emission testing.

Appendix A of this report provides complete details on the sampling and analysis procedures that were followed.

SECTION 5

FACILITY OPERATION AND SOURCE ACTIVITY MONITORING

The facility operation and source activity data collected in the program are summarized in the following sections. These data were used to calculate the particulate emission factors shown in Section 7.

5.1 FACILITY OPERATING DATA

The operation of the wind tunnel facility and the blasting equipment during testing represented typical wind speeds and sand blasting practices as discussed in Section 3.2. During each run, facility operating data were recorded every 15 min for several parameters at several points in the facility. Table 5-1 presents the averages of these readings for each test run. More detailed information concerning facility operation is included in Appendix D.

5.2 SOURCE CHARACTERIZATION MEASUREMENTS

Several types of measurements were conducted to characterize the abrasive (sand) used, the surfaces cleaned (before and after cleaning), and blasting operation. For the abrasive (sand) evaluated, composite samples were collected and analyzed for: moisture content; particle size distribution (by mechanical sieving); durability (Modified ASTM C 131); and major elements and metals composition. The sieving and abrasion loss results for unused sand are summarized in Table 5-2 with additional data on chemical composition, etc., provided in Appendix F.

TABLE 5-1. FACILITY OPERATING DATA DURING TESTING[a]

Parameter	Units	Run 1/2	Run 3/4	Run 5/6	Run 7/8	Run 9/10	Run 11/12
Date	1993	3/23	3/24	3/25	3/29	3/29	3/30
Nominal wind speed	mph	15	5	10	10	10	10
Parts cleaned	Type	None	None	None	Painted	Clean	Oxidized
Relative humidity	%	75	80	65	72	72	67
Air temperature	°F	40	42	45	68	68	67
Barometric pressure	in Hg	28.93	28.94	29.05	28.68	28.68	28.47
Fan speed[b]	rpm	789	258	498	–	–	–
Fan current[b]	Amperes	52	17	21	21	20	20
Fan voltage[b]	Volts	205	205	205	205	205	205
Static pressure, south	in WC[c]	–	–	0.52	0.50	0.45	0.52
Static pressure, north	in WC[c]	–	–	0.35	0.30	0.29	0.31
Sand charged into blaster	lb	700	700	765	749	723	659
Sand recovery from blaster	lb	9.5	27	29	77	66	30
Net sand fed	lb	690.5	673	736	672	657	629
Sand recovery from tunnel							
Total recovered	lb	67.5	663	605	614	578	613
% of net sand fed	%	9.8	98.5	82.2	91.4	88.0	97.5
Blaster operating time	min	70	70	70	65.5	66.5	65.5
Net sand use rate	lb/min	10	9.5	10.5	10.3	9.9	9.6
Area cleaned	ft^2	NA	NA	NA	177	NA	68.8
Sand use parameter	lb/ft^2	NA	NA	NA	3.8	NA	9.1
Cleaning rate	ft^2/min	NA	NA	NA	2.7	NA	1.1
Surface profile	mils	–	–	–	–	–	–

(continued)

TABLE 5-1 (Continued)

Parameter	Units	Run 15/16	Run 17/18	Run 19/20	Run 21/22	Run 23/24	Run 25/26
Date	1993	4/2	4/2	4/5	4/5	4/6	4/6
Nominal wind speed	mph	5	5	5	15	15	15
Parts cleaned	Type	Painted	Cleaned	Oxidized	Painted	Cleaned	Oxidized
Relative humidity	%	65	50	64	51	81	64
Barometric pressure	in Hg	29.10	29.02	29.08	29.03	28.98	28.97
Air temperature	°F	40	46	38	52	40	52
Fan speed[b]	rpm	254	–	256	796	798	–
Fan current[b]	Amperes	16	17	16	56	57	57
Fan voltage[b]	Volts	206	208	205	196	196	197
Static pressure, south	in WC[c]	0.14	0.12	0.14	> 1	> 1	> 1
Static pressure, north	in WC[c]	0.10	0.08	0.10	1.1	1.1	1.1
Sand charged into blaster	lb	800	501	803	670	628	762
Sand recovery from blaster	lb	39	69	70	47	1	42
Net sand used	lb	761	432	733	623	627	720
Sand recovery from tunnel							
Total recovered	lb	730	432	712	437	479	529
% of net sand fed	%	95.9	100	97.1	70.1	76.4	73.5
Blaster operating time	min	66	66.5	65	64.5	64.0	66.0
Net sand use rate	lb/min	11.5	6.5	11.3	9.7	9.8	10.9
Area cleaned	ft^2	199	–	117	204	–	113
Sand use parameter	lb/ft^2	3.8	–	6.3	3.1	–	6.4
Cleaning rate	ft^2/min	3.0	–	1.8	3.2	–	1.7
Surface profile	mils	1.9/2.0	2.25	2.5/2.5	1.8/2.9	2.05	2.35

[a] Test consisted of collecting duplicate samples for each test condition, and are referred to as Run 1/2, Run 3/4, etc.; Run 13/14 voided because rain caused nonrepresentative blasting operation.

[b] Average for two fans.

[c] Inches water column.

TABLE 5-2. PARTICLE SIZE DISTRIBUTION AND ABRASION LOSS OF UNUSED ABRASIVE (SILICA SAND)

Sieve No.	Particle size range (μmP)[a]	Weight percent in stated size range
40	> 420	57.5
100	149-420	42.2
200	75-149	0.3
Pan	< 75	Nil
Modified L.A. abrasion loss:[b] 0.3% < 200 mesh		

[a] μmP = microns physical diameter. Due to negligible amount of sample penetrating the 200-mesh sieve, sonic sieving could not be performed on the < 75 μmP material.

[b] Per modified ASTM C 131—see Appendix A for method.

The coating film thickness for the painted steel parts that were blasted during testing was determined using ASTM Method G12-83. This method determines coating thickness by an instrument that measures thickness by nondestructive techniques, based on variations in magnetic attraction between its detection unit and the magnetic base material. This method was developed for pipeline coatings on steel, but is suitable for measuring thickness of dry, nonmagnetic coatings on either a flat or curved base, such as those used during testing. The coating thicknesses of the individual paint specimens tested are summarized in Table 5-3.

The surface profile of the blast cleaned painted and oxidized steel parts was determined after blasting using ASTM Method D4417. This method determines the profile of the surface cleaned with use of a special compressible foam tape that is impressed into the surface with a burnishing tool. This creates a reverse image or replica of the surface profile that is measured with a special spring-loaded micrometer. This method was developed for field measurement of the surface profile of blast cleaned steel using sand, steel shot, steel grit, or other nonmetallic abrasive media. The data obtained from these analyses were included in Table 5-1 shown previously.

For the surfaces cleaned during testing, a sample of each was collected and analyzed by a combination of Scanning Election Microscopy (SEM) and Energy Dispersive X-Ray (EDX) spectroscopy to determine the surface elemental composition. Results from this determination are provided in Appendix F.

TABLE 5-3. COATING THICKNESS OF PAINT ON MILD STEEL CLEANED BY ABRASIVE BLASTING

Specimen No.	Surface film thickness (mils)[a]
1	1.8-2.0
2[b]	None detected
3[c]	N/A
4	5-6
5	2.8-3.0
6	2.8-3.0
7	0.8-1.0
8[d]	None detected
9[d]	None detected
Average[e]	3

[a] 1 mil = 0.001 in = 0.0254 mm. N/A = not applicable.

[b] Rusted specimen.

[c] Blast cleaned specimen.

[d] Paint chips.

[e] Average of all non-zero, mid-range values.

Finally, the sand use (throughput) rate of the blasting operation was determined gravimetrically and checked by means of a predictive equation. The spent abrasive was also collected from the interior of the tunnel and a mass balance performed. A summary of the characterization methods for the abrasives and surfaces tested in the experimental program along with the test methods used in emission sampling is provided in Table 5-4.

TABLE 5-4. SUMMARY OF SAMPLING AND ANALYSIS PARAMETERS AND METHODS

Sample	Sampling frequency for each run	Sampling method	Sample size	Analytical parameters	Preparation method	Analytical method
Abrasive material	One composite sample assembled from subsamples of each lot of material used.	ASTM D75 and ASTM C702	Variable	Moisture content	Oven drying	Gravimetric
				Particle Size	NA	Mechanical sieving and sonic sieving[a]
				Durability	NA	Modified ASTM C 131
				Metals[b]	Acid digestion (SW846-3050)	ICP[c]
Test surface	One sample for each specimen type used in testing program	Saber saw	Variable	Elemental and surface characteristics	None	SEM and EDX as needed[d]
	One sample per run	NA	0.1 in^2	Coating thickness	NA	ASTM G12-83[i]
	One sample per run	NA	0.1 in^2	Surface profile	NA	ASTM D4477, Method C[j]
Wind tunnel emissions	62.5 min integrated sample per run	MM5 (PM/MM)[e]	(f)	Metals[g]	Acid digestion (SW846-3050)	ICP[c]
				Particulate matter	Desiccation	Gravimetric
				Moisture	NA	Gravimetric
				Temperature	NA	Thermocouple
				Velocity	NA	Pitot tube
	62.5 min integrated sample per run	PSD and PM-10[h]	Variable	Particle size distribution	Desiccation	Gravimetric[c]
				Metals[g]	Acid digestion (SW846-3050)	ICP[c]

[a] Sonic sieving was planned but not performed (see Table 5-2).
[b] Metals included in analysis were As, Be, Cd, Co, Cr, Mn, Ni, Pb, Sb, Se, and Fe.
[c] ICP = inductively coupled plasma emission spectroscopy per EPA Method 6010 (SW846).
[d] SEM = Scanning Electron Microscopy; EDX = Energy Dispersive X-ray Spectroscopy.
[e] MM5 = Modified Method 5 for multiple metals and particulate matter as specified in EPA Method 0012 (SW846).
[f] Exact volume of gas sampled was dependent on isokinetic sampling rate.
[g] Metals included in analysis were As, Be, Cd, Co, Cr, Mn, Ni, Pb, Sb, Se, and Fe.
[h] Impactor/cyclone used to collect particulate matter by particle size distribution (e.g., > 10, 5-10, 1-5, < 1 μmA) according to EPA Method 201A and Method 0012 (SW846).
[i] Instrument that measures thickness by nondestructive techniques, based on variations in magnetic attraction between its detection unit and the magnetic base material.
[j] Compressible foam tape impressed into the blast cleaned surface forming a reverse image of the profile with the peak-to-valley height on the tape measured with a micrometer.

SECTION 6

EMISSION TEST RESULTS

Determination of emission results for total particulate, PM-10, PM-2.5, and the ten HAP metals plus iron were performed using standard EPA stack sampling data reduction procedures and calculations. The following outlines the basic calculation scheme used for the determination of emission results in the experimental program.

6.1 TOTAL PARTICULATE EMISSION RATE

The concentration of particulate matter measured by the MM5 sampling train is given by:

$$C_s = \frac{M_n 10^{-3}}{V_{ms}} \tag{6-1}$$

where: C_s = concentration of particulate matter or HAP metal (g/dry std m^3)

M_n = total particulate matter or HAP metal collected on probe and filter (mg)

V_{ms} = volume of gas sampled as measured by dry gas meter, corrected to standard conditions (dry std m^3)

To be consistent with EPA Reference Methods, all concentrations and volumes are expressed in terms of dry standard conditions (20°C and 760 mmHg).

The total mass emission rate determined during each test run is calculated by the expression:

$$E_t = 60\ C_s\ Q_{sd}\ 10^{-3} \qquad (6\text{-}2)$$

where: E_t = total particulate emission rate (kg/h)

C_s = concentration of total particulate matter measured in the wind tunnel (g/dry std m^3)

Q_{sd} = volumetric flow rate through wind tunnel, corrected to standard conditions (dry std m^3/min)

Table 6-1 gives the measured concentrations and emission rates for total particulate matter.

6.2 METALS CONCENTRATIONS

The results for the total particulate metals, as determined from analysis of the MM5 sampling train filters and probe rinses are shown in Table 6-2. The reported concentrations have been blank-corrected based on the analytical results from the blank train runs. The following is a summary of the procedure used for blank correcting analyte masses as described in the method provided in *EPA Methods Manual for Compliance with BIF Regulations*, EPA/530-SW-91-010, PB-91-120-006, December 1990 ("Methodology for the Determination of Metals Emissions in Gases from Hazardous Waste Incinerators and Similar Combustion Sources").

If the blank train front-half analysis result m_{fhb} was between 0 and A µg, where A is equal to 1.4 µg/in^2 multiplied by the actual area of the filter used in the sampling train, the front-half blank correction value was set equal to m_{fhb}. Because 4.9-inch diameter filters were used, A is equal to 26.4 µg.

TABLE 6-1. SUMMARY DATA AND PARTICULATE EMISSION RESULTS[a]

	Gas volume sampled (dscm)	Percent moisture	Average gas temp. (°C)	% Iso-kinetic sampling	Gas flow rate (dscm/min)	Total particulate concentration (mg/dscm)	Particulate emission rate (kg/hr)
Run 1							
PM/MM	0.908	0.9	6	100.3	3050	575.5	105.17
HCSS	0.981	0.9	6	97.3	3050	707.2	
Run 2							
PM/MM	0.965	0.9	7	96.6	3026	1216.4	220.27
HCSS	0.895	1.0	6	100.0	3018	1371.7	
Run 3							
PM/MM	0.820	0.9	5	99.7	879	158.8	8.37
HCSS	0.820	0.9	6	99.7	879	77.0	
Run 4							
PM/MM	0.759	0.7	6	93.1	1082	259.2	16.84
HCSS	0.919	0.7	6	91.2	1083	17.0	
Run 5							
PM/MM	0.951	0.8	9	102.2	1807	817.7	88.31
HCSS	0.947	1.1	9	102.0	1803	735.7	
Run 6							
PM/MM	0.944	1.3	9	89.1	2070	686.8	85.63
HCSS	1.077	1.1	11	100.5	2081	1203.0	
Run 7							
PM/MM	0.942	2.3	19	100.7	1815	215.4	23.43
HCSS	0.962	1.6	19	103.1	1825	292.0	
Run 8							
PM/MM	0.999	2.3	19	101.3	1914	139.6	16.03
HCSS	0.963	1.5	19	97.0	1926	1768.6	
Run 9							
PM/MM	0.920	2.6	25	105.4	1695	121.8	12.39
HCSS	0.958	2.1	25	109.9	1702	128.7	
Run 10							
PM/MM	0.993	3.2	25	102.5	1881	215.6	24.33
HCSS	0.975	1.9	25	99.5	1902	157.1	
Run 11							
PM/MM	0.900	1.8	19	100.5	1739	55.2	5.75
HCSS	0.960	1.7	19	107.7	1741	123.5	
Run 12							
PM/MM	0.930	2.2	19	101.5	1778	75.8	8.08
HCSS	1.001	1.3	19	108.5	1791	160.8	

(continued)

TABLE 6-1 (Continued)

	Gas volume sampled (dscm)	Percent moisture	Average gas temp. (°C)	% Iso-kinetic sampling	Gas flow rate (dscm/min)	Total particulate concentration (mg/dscm)	Particulate emission rate (kg/hr)
Run 15							
PM/MM	0.783	0.8	3	99.9	839	199.2	10.01
HCSS	1.227	0.8	3	110.0	837	144.0	
Run 16							
PM/MM	0.793	0.8	4	99.9	845	134.8	6.83
HCSS	1.258	0.5	4	111.6	847	171.1	
Run 17							
PM/MM	0.963	0.2	8	99.4	728	114.0	4.97
HCSS	1.122	0.7	8	116.2	725	96.8	
Run 18							
PM/MM	0.873	0.7	8	100.2	654	131.3	5.15
HCSS	1.114	0.5	8	127.6	655	117.6	
Run 19							
PM/MM	1.211	0.9	6	100.2	926	137.1	7.61
HCSS	1.196	0.9	6	97.8	919	159.3	
Run 20							
PM/MM	1.149	0.4	8	99.7	883	145.2	7.68
HCSS	1.201	0.5	8	102.2	883	146.9	
Run 21							
PM/MM	0.737	1.0	11	100.0	2487	138.6	20.65
HCSS	0.983	1.1	11	119.9	2484	178.3	
Run 22							
PM/MM	0.748	1.4	11	99.6	2553	178.2	27.25
HCSS	0.967	0.8	11	114.2	2565	409.0	
Run 23							
PM/MM	0.723	0.9	5	102.1	2410	106.6	15.39
HCSS	1.016	0.7	5	127.4	2414	217.6	
Run 24							
PM/MM	0.806	0.9	6	101.3	2705	207.8	33.68
HCSS	1.007	0.7	6	112.5	2710	300.0	

(continued)

TABLE 6-1 (Continued)

	Gas volume sampled (dscm)	Percent moisture	Average gas temp. (°C)	% Iso-kinetic sampling	Gas flow rate (dscm/min)	Total particulate concentration (mg/dscm)	Particulate emission rate (kg/hr)
Run 25							
PM/MM	0.697	1.4	12	104.3	2270	217.4	29.57
HCSS	0.983	1.0	12	130.7	2278	218.0	
Run 26							
PM/MM	0.790	1.5	13	106.2	2532	173.1	26.25
HCSS	0.988	0.7	13	117.4	2547	290.0	

[a] Testing consisted of collecting duplicate samples for each test condition; as such, data are presented as a pair for each condition. Runs 1 through 6 represent preliminary data without a cleaned surface. PM/MM = Method 5 sampling train for total particulate and metals. HCSS = Andersen high capacity stack sampling system. HCSS data not used to determine total particulate emissions.

TABLE 6-2. SUMMARY OF TOTAL PARTICULATE METAL CONCENTRATIONS

	Gas sample volume (dscm)	Metal					
		Cd	Cr	Fe	Mn	Ni	Pb
Run 7	0.942						
Rinses, µg		1.8	0.5	219	3.1	0.0	12.6
Filter, µg		< 0.003	12.2	428	4.4	6.0	13.0
Total, µg		1.8	12.7	647	7.5	6.0	25.6
Concentration, µg/dscm		1.9	13.5	687	8.0	6.4	27.2
Run 8	0.999						
Rinses, µg		3.5	11.3	475	6.2	4.3	19.4
Filter, µg		< 0.003	18.7	603	5.8	12.5	24.9
Total, µg		3.5	30.0	1,078	12.0	16.8	44.3
Concentration, µg/dscm		3.5	30.0	1,079	12.0	16.8	44.3
Run 9	0.920						
Rinses/Filter, µg		1.7	12.3	866	4.8	2.6	3.7
Concentration, µg/dscm		1.8	13.4	941	5.2	2.8	4.0
Run 10	0.993						
Rinses/Filter, µg		1.7	19.0	1,587	9.2	21.6	2.7
Concentration, µg/dscm		1.7	19.1	1,598	9.3	21.8	2.7
Run 11	0.900						
Rinses/Filter, µg		2.1	11.6	3,284	16.7	23.2	17.8
Concentration, µg/dscm		2.3	12.9	3,649	18.6	25.8	19.8
Run 12	0.930						
Rinses/Filter, µg		3.3	11.8	3,839	19.9	8.5	17.4
Concentration, µg/dscm		3.5	12.7	4,128	21.4	9.1	18.7
Run 15	0.783						
Rinses/Filter, µg		3.9	21.7	1,526	9.0	10.8	32.3
Concentration, µg/dscm		5.0	27.7	1,949	11.5	13.8	41.3
Run 16	0.793						
Rinses/Filter, µg		5.3	19.8	1,262	10.1	9.1	37.1
Concentration, µg/dscm		6.7	25.0	1,591	12.7	11.5	46.8
Run 17	0.963						
Rinses/Filter, µg		6.4	9.1	1,063	5.6	4.4	6.3
Concentration, µg/dscm		6.6	9.4	1,104	5.8	4.6	6.5
Run 18	0.873						
Rinses/Filter, µg		7.8	10.1	1,116	6.4	11.2	7.8
Concentration, µg/dscm		8.9	11.6	1,279	7.3	12.8	8.9
Run 19	1.211						
Rinses/Filter, µg		5.4	10.1	7,456	28.7	8.3	87.0
Concentration, µg/dscm		4.5	8.3	6,157	23.7	6.9	71.8

TABLE 6-2 (Continued)

	Gas sample volume (dscm)	Metal					
		Cd	Cr	Fe	Mn	Ni	Pb
Run 20	1.149						
Rinses/Filter, µg		3.2	8.6	974	27.1	8.9	89.9
Concentration, µg/dscm		2.8	7.5	847	23.6	7.7	78.2
Run 21	0.737						
Rinses/Filter, µg		7.8	33.7	629	5.2	45.6	23.8
Concentration, µg/dscm		10.6	45.7	853	7.1	61.9	32.3
Run 22	0.748						
Rinses/Filter, µg		8.6	16.6	697	5.0	24.3	27.3
Concentration, µg/dscm		11.5	22.2	932	6.7	32.5	36.5
Run 23	0.723						
Rinses/Filter, µg		2.1	14.6	470	2.6	8.2	4.1
Concentration, µg/dscm		2.9	20.2	650	3.6	11.3	5.7
Run 24	0.806						
Rinses/Filter, µg		2.6	10.5	650	3.6	13.1	6.4
Concentration, µg/dscm		3.2	13.0	807	4.5	16.3	7.9
Run 25	0.697						
Rinses/Filter, µg		2.5	13.7	1,979	7.7	16.4	37.2
Concentration, µg/dscm		3.6	19.7	2,839	11.0	23.5	53.4
Run 26	0.790						
Rinses/Filter, µg		2.5	9.0	2,168	6.8	9.6	35.3
Concentration, µg/dscm		3.2	11.4	2,744	8.6	12.2	44.7

If m_{fhb} was greater than A (26.4 µg), the greater of the following was used as the blank correction,

1. A (26.4 µg)
2. The lesser of m_{fhb} or 5% of the actual sampling train front half analysis result, m_{fh}.

If the m_{fhb} was less than the detection limit, the correction value was set equal to zero.

Upon review of the metal analysis results, it was decided that further data reduction for As, Be, Co, Sb, and Se would not be required for the following reasons:

- Arsenic (As) was detected on the HCSS thimble at the same level as that of the blank thimble sample. Arsenic was detected (at low levels) in only four other samples.
- Beryllium (Be) was detected only on the HCSS thimbles, at the same level as that of the blank thimble sample.
- Cobalt (Co) was detected only on two MM5 sampling train samples from Runs 19 and 20.
- Selenium (Se) was not detected in any of the sampling train samples.
- Antimony (Sb) was detected only on the sample from the Run 8 MM5 sampling train.

6.3 PARTICLE SIZE DISTRIBUTIONS AND SIZE-SPECIFIC EMISSION RATES

6.3.1 Particulate Matter

For each run conducted, the particle size distribution data were reported for each of the four separation stages. The data reduction included two computation steps. Input data included sample flow rate and temperature, gas composition, and the individual stage (net) weight gains. Particle size-related data reduction procedures

were in accordance with the "Operating Manual for Andersen Samplers, Inc., HCSS, Heavy Grain Loading Impactor, Particle Sizing Stack Samplers," January 1, 1980. All calculations were performed in terms of microns aerodynamic diameter (μmA).

For each run, the first computation steps involved calculation of overall (total) particulate mass, separation stage cutpoints (D_{50} size),* fractional and cumulative particle masses, and the geometric mean diameter for each stage. These calculations were performed using a computer program originally developed by Johnson et al. (1978) and improved by MRI (Hansen and Kinsey, 1983). Impactor calibration constants developed by the instrument manufacturer were used to calculate impactor stage D_{50} cutpoints. Table 6-3 gives the particle size results for each run for each stage including the net weight collected, the fractional and cumulative percent particle size distributions, the D_{50} cutpoint values, and the geometric mean diameters.

The second computation step involved determining PM-10 and PM-2.5 concentrations based on the cumulative particle size distribution. This was accomplished by averaging the cumulative percent results for the paired HCSS runs, and graphically determining the cumulative percent distribution values for 10 μmA and 2.5 μmA (aerodynamic diameter). Figures 6-1 through 6-3 graphically present the cumulative percent and particle size (D_{50}) results for each paired HCSS run along with the average cumulative percent values for 10 μmA and 2.5 μmA, respectively. The average cumulative percent values for 10 μmA and 2.5 μmA were multiplied by the total particulate concentration from the Method 5 results to determine the PM-10 and PM-2.5 concentrations, respectively. The total particulate, PM-10, and PM-2.5 concentration and emission results are summarized in Table 6-4.

6.3.2 Metals

As stated previously, each of the particulate fractions collected from the HCSS was analyzed for the eleven metals. For each run conducted, the particle size distribution for each metal of interest was reported based on the data for each of the four separation stages. Data reduction was similar to that performed to obtain the total particle size results. Tables 6-5a and 6-5b give the particle size results for each metal including the net weight collected on each stage, the cumulative percent size distributions, and the geometric mean diameter for each stage.

---

* D_{50} is defined as the particle diameter representing a 50% collection efficiency for each stage of an inertial sizing device (e.g., impactor or cyclone).

TABLE 6-3. PARTICLE SIZE TESTING RESULTS

Results[a]	Impactor stage 1	2	3 Cyclone	4 Filter
Nominal size range (μmA)[b]	> 10	5-10	1-5	< 1
Run 1				
Net weight (mg) collected	567.61	1.91	1.41	0.00
Fraction (% of total)	99.42	0.33	0.25	0.00
Cumulative % (with filter)	99.42	99.75	100.00	100.00
D_{50} size (μmA)[c]	9.91	5.58	1.13	<1.13
Geometric mean diameter[d] (μmA)	14.08	7.44	2.51	0.11
Run 2				
Net weight (mg) collected	1080.00	8.59	0.00	0.20
Fraction (% of total)	99.19	0.79	0.00	0.02
Cumulative % (with filter)	99.19	99.98	99.98	100.00
D_{50} size (μmA)[c]	9.98	5.63	1.15	<1.15
Geometric mean diameter[d] (μmA)	14.13	7.50	2.54	0.11
Run 3				
Net weight (mg) collected	42.39	0.00	0.50	4.90
Fraction (% of total)	88.70	0.00	1.05	10.25
Cumulative % (with filter)	88.70	88.70	89.75	100.00
D_{50} size (μmA)[c]	10.98	6.37	1.48	<1.48
Geometric mean diameter[d] (μmA)	14.82	8.37	3.07	0.12
Run 4				
Net weight (mg) collected	9.61	1.00	0.00	0.00
Fraction (% of total)	90.57	9.43	0.00	0.00
Cumulative % (with filter)	90.57	100.00	100.00	100.00
D_{50} size (μmA)[c]	10.97	6.36	1.47	<1.47
Geometric mean diameter[d] (μmA)	14.81	8.35	3.06	0.12
Run 5				
Net weight (mg) collected	465.81	107.41	2.91	0.00
Fraction (% of total)	80.85	18.64	0.50	0.00
Cumulative % (with filter)	80.85	99.50	100.00	100.00
D_{50} size (μmA)[c]	10.03	5.67	1.17	<1.17
Geometric mean diameter[d] (μmA)	14.16	7.54	2.57	0.11
Run 6				
Net weight (mg) collected	929.19	3.50	2.59	0.00
Fraction (% of total)	99.35	0.37	0.28	0.00
Cumulative % (with filter)	99.35	99.72	100.00	100.00
D_{50} size (μmA)[c]	10.03	5.67	1.17	<1.17
Geometric mean diameter[d] (μmA)	14.16	7.54	2.58	0.11
Run 7				
Net weight (mg) collected	83.89	137.30	9.81	0.30
Fraction (% of total)	36.27	59.36	4.24	0.13
Cumulative % (with filter)	36.27	95.63	99.87	100.00
D_{50} size (μmA)[c]	9.89	5.54	1.14	<1.14
Geometric mean diameter[d] (μmA)	14.06	7.40	2.51	0.11

(continued)

TABLE 6-3 (Continued)

Results[a]	Impactor stage 1	2	3 Cyclone	4 Filter
Run 8				
Net weight (mg) collected	89.89	1045.50	261.80	3.10
Fraction (% of total)	6.42	74.66	18.70	0.22
Cumulative % (with filter)	6.42	81.08	99.78	100.00
D_{50} size (μmA)[c]	9.90	5.54	1.14	<1.14
Geometric mean diameter[d] (μmA)	14.07	7.41	2.51	0.11
Run 9				
Net weight (mg) collected	83.20	12.39	3.39	2.40
Fraction (% of total)	82.07	12.22	3.34	2.37
Cumulative % (with filter)	82.07	94.29	97.63	100.00
D_{50} size (μmA)[c]	9.87	5.51	1.14	<1.14
Geometric mean diameter[d] (μmA)	14.05	7.38	2.51	0.11
Run 10				
Net weight (mg) collected	113.00	5.70	5.30	2.00
Fraction (% of total)	89.68	4.53	4.20	1.59
Cumulative % (with filter)	89.68	94.21	98.41	100.00
D_{50} size (μmA)[c]	9.82	5.47	1.13	<1.13
Geometric mean diameter[d] (μmA)	14.01	7.33	2.48	0.11
Run 11				
Net weight (mg) collected	51.11	33.80	7.69	5.00
Fraction (% of total)	52.37	34.63	7.88	5.12
Cumulative % (with filter)	52.37	87.00	94.88	100.00
D_{50} size (μmA)[c]	9.87	5.52	1.13	<1.13
Geometric mean diameter[d] (μmA)	14.05	7.38	2.50	0.11
Run 12				
Net weight (mg) collected	55.59	66.89	9.20	0.90
Fraction (% of total)	41.93	50.45	6.94	0.68
Cumulative % (with filter)	41.93	92.38	99.32	100.00
D_{50} size (μmA)[c]	9.73	5.42	1.09	<1.09
Geometric mean diameter[d] (μmA)	13.95	7.26	2.43	0.10
Run 15				
Net weight (mg) collected	120.00	14.50	11.00	0.00
Fraction (% of total)	82.47	9.97	7.56	0.00
Cumulative % (with filter)	82.47	92.44	100.00	100.00
D_{50} size (μmA)[c]	9.12	4.99	0.88	<0.88
Geometric mean diameter[d] (μmA)	13.51	6.74	2.10	0.09
Run 16				
Net weight (mg) collected	127.59	18.20	25.89	5.60
Fraction (% of total)	71.97	10.27	14.60	3.16
Cumulative % (with filter)	71.97	82.24	96.84	100.00
D_{50} size (μmA)[c]	9.04	4.93	0.86	<0.86
Geometric mean diameter[d] (μmA)	13.44	6.68	2.06	0.09

(continued)

TABLE 6-3 (Continued)

Results[a]	Impactor stage 1	2	3 Cyclone	4 Filter
Run 17				
Net weight (mg) collected	11.89	69.91	6.50	1.10
Fraction (% of total)	13.30	78.20	7.27	1.23
Cumulative % (with filter)	13.30	91.50	98.77	100.00
D_{50} size (μmA)[c]	9.42	5.21	0.98	<0.98
Geometric mean diameter[d] (μmA)	13.73	7.00	2.26	0.10
Run 18				
Net weight (mg) collected	72.09	11.00	11.91	12.70
Fraction (% of total)	66.94	10.21	11.06	11.79
Cumulative % (with filter)	66.94	77.15	88.21	100.00
D_{50} size (μmA)[c]	9.45	5.23	0.99	<0.99
Geometric mean diameter[d] (μmA)	13.75	7.03	2.28	0.10
Run 19				
Net weight (mg) collected	125.41	15.20	14.70	1.50
Fraction (% of total)	79.97	9.70	9.38	0.96
Cumulative % (with filter)	79.97	89.67	99.04	100.00
D_{50} size (μmA)[c]	9.29	5.11	0.94	<0.94
Geometric mean diameter[d] (μmA)	13.63	6.89	2.19	0.10
Run 20				
Net weight (mg) collected	103.11	14.80	16.80	10.50
Fraction (% of total)	71.01	10.19	11.57	7.23
Cumulative % (with filter)	71.01	81.20	92.77	100.00
D_{50} size (μmA)[c]	9.29	5.11	0.94	<0.94
Geometric mean diameter[d] (μmA)	13.63	6.89	2.19	0.10
Run 21				
Net weight (mg) collected	129.00	8.59	6.09	0.60
Fraction (% of total)	89.40	5.96	4.22	0.42
Cumulative % (with filter)	89.40	95.36	99.58	100.00
D_{50} size (μmA)[c]	9.90	5.57	1.13	<1.13
Geometric mean diameter[d] (μmA)	14.07	7.42	2.51	0.11
Run 22				
Net weight (mg) collected	293.70	13.50	16.50	1.60
Fraction (% of total)	90.29	4.15	5.07	0.49
Cumulative % (with filter)	90.29	94.44	99.51	100.00
D_{50} size (μmA)[c]	9.98	5.62	1.15	<1.15
Geometric mean diameter[d] (μmA)	14.13	7.49	2.55	0.11
Run 23				
Net weight (mg) collected	174.89	6.09	0.50	0.50
Fraction (% of total)	96.10	.35	0.27	0.27
Cumulative % (with filter)	96.10	99.45	99.73	100.00
D_{50} size (μmA)[c]	9.87	5.55	1.11	<1.11
Geometric mean diameter[d] (μmA)	14.05	7.40	2.48	0.11

(continued)

TABLE 6-3 (Continued)

Results[a]	Impactor stage 1	2	3 Cyclone	4 Filter
Run 24				
Net weight (mg) collected	232.59	5.50	7.09	3.30
Fraction (% of total)	93.60	2.21	2.85	1.33
Cumulative % (with filter)	93.60	95.82	98.67	100.00
D_{50} size (μmA)[c]	9.90	5.58	1.12	<1.12
Geometric mean diameter[d] (μmA)	14.07	7.43	2.50	0.11
Run 25				
Net weight (mg) collected	171.59	3.70	1.00	0.20
Fraction (% of total)	97.22	2.10	0.57	0.11
Cumulative % (with filter)	97.22	99.32	99.89	100.00
D_{50} size (μmA)[c]	9.94	5.59	1.14	<1.14
Geometric mean diameter[d] (μmA)	14.10	7.45	2.53	0.11
Run 26				
Net weight (mg) collected	225.50	8.11	1.91	0.00
Fraction (% of total)	95.75	3.44	0.81	0.00
Cumulative % (with filter)	95.75	99.19	100.00	100.00
D_{50} size (μmA)[c]	9.94	5.59	1.14	<1.14
Geometric mean diameter[d] (μmA)	14.10	7.45	2.53	0.11

[a] Additional support data are provided in Appendix C. Testing consisted of collecting duplicate samples for each test condition; as such, data are presented as duplicates for each condition. Runs 1 through 6 represent preliminary data.

[b] μmA = Aerodynamic particle diameter, in micrometers, assuming a particle density of 1 g/cm^3.

[c] D_{50} = the particle diameter associated with the 50% collection efficiency for each inertial sizing stage as determined by theoretical calculations or by calibration.

[d] Geometric mean diameter (GMD) = the single value representation of the particle size range collected on each inertial sizing stage, as determined by the equation (assuming that largest particle is 20 μmA and smallest particle with a measurable mass is 0.01 μmA):

$$(GMD)^n = \sqrt{(D_{50})_n \times (D_{50})_{n+1}}$$

where
n = Stage of concern

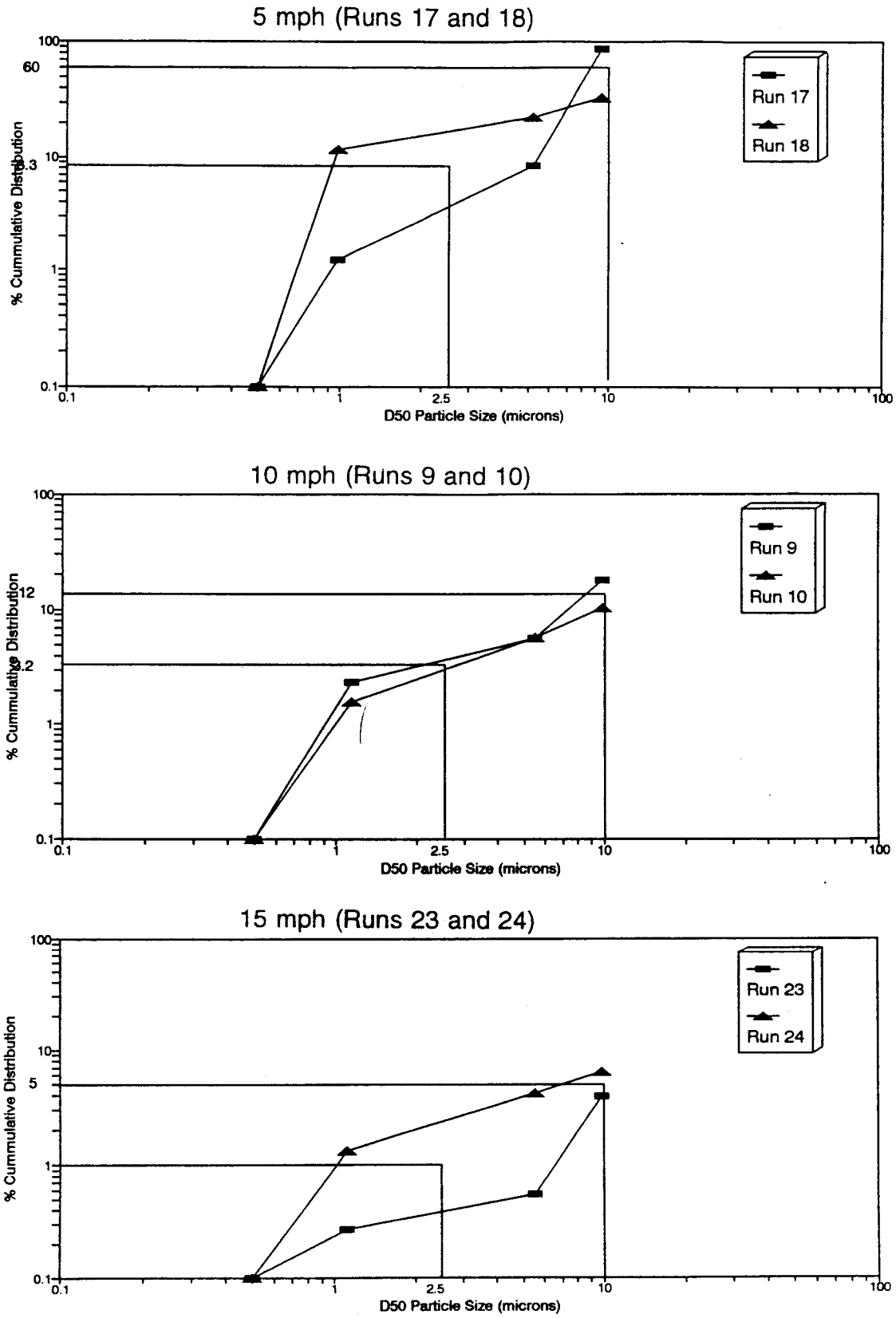

Figure 6-1. Cumulative particle size distributions for clean surface.

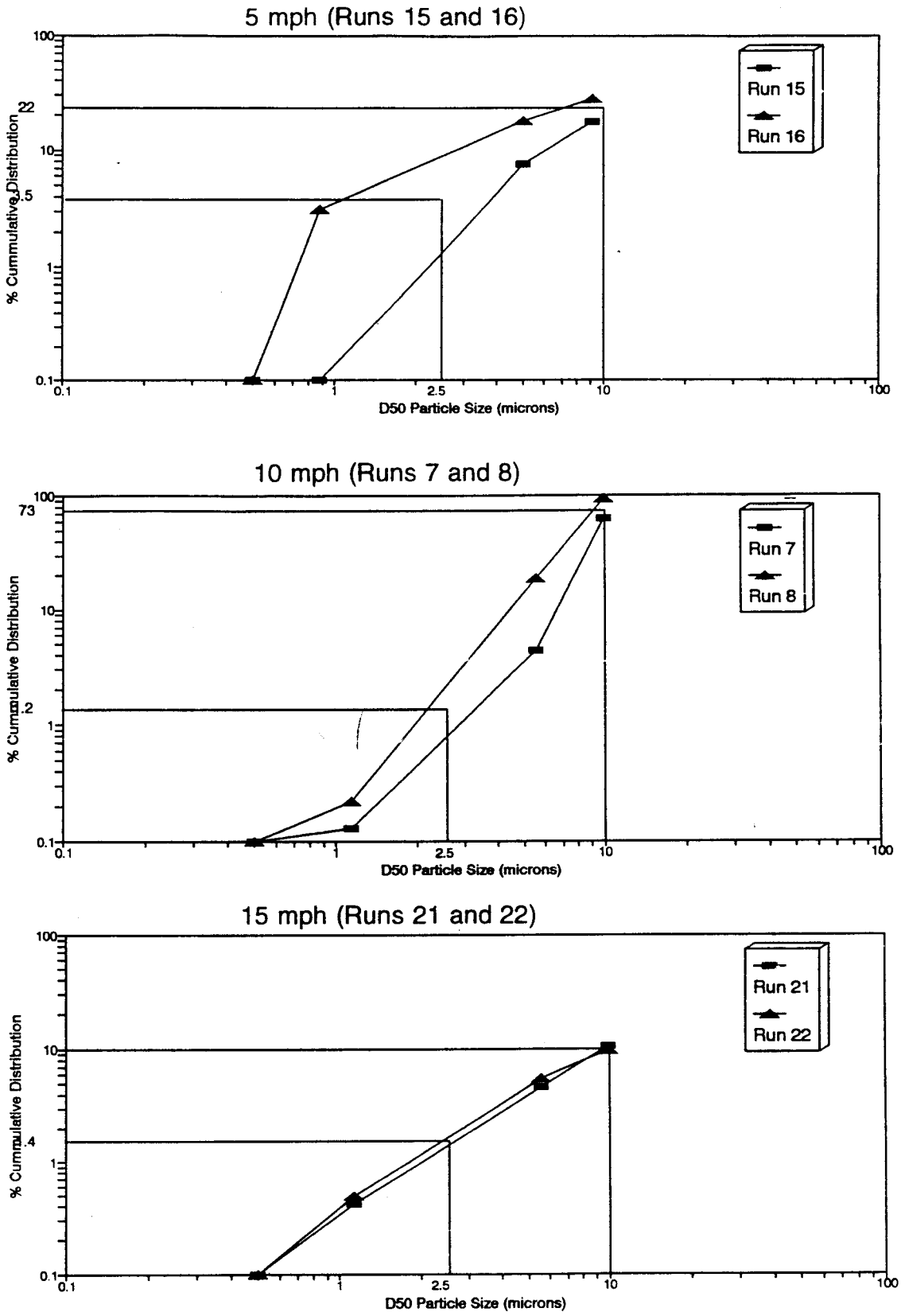

Figure 6-2. Cumulative particle size distributions for painted surface.

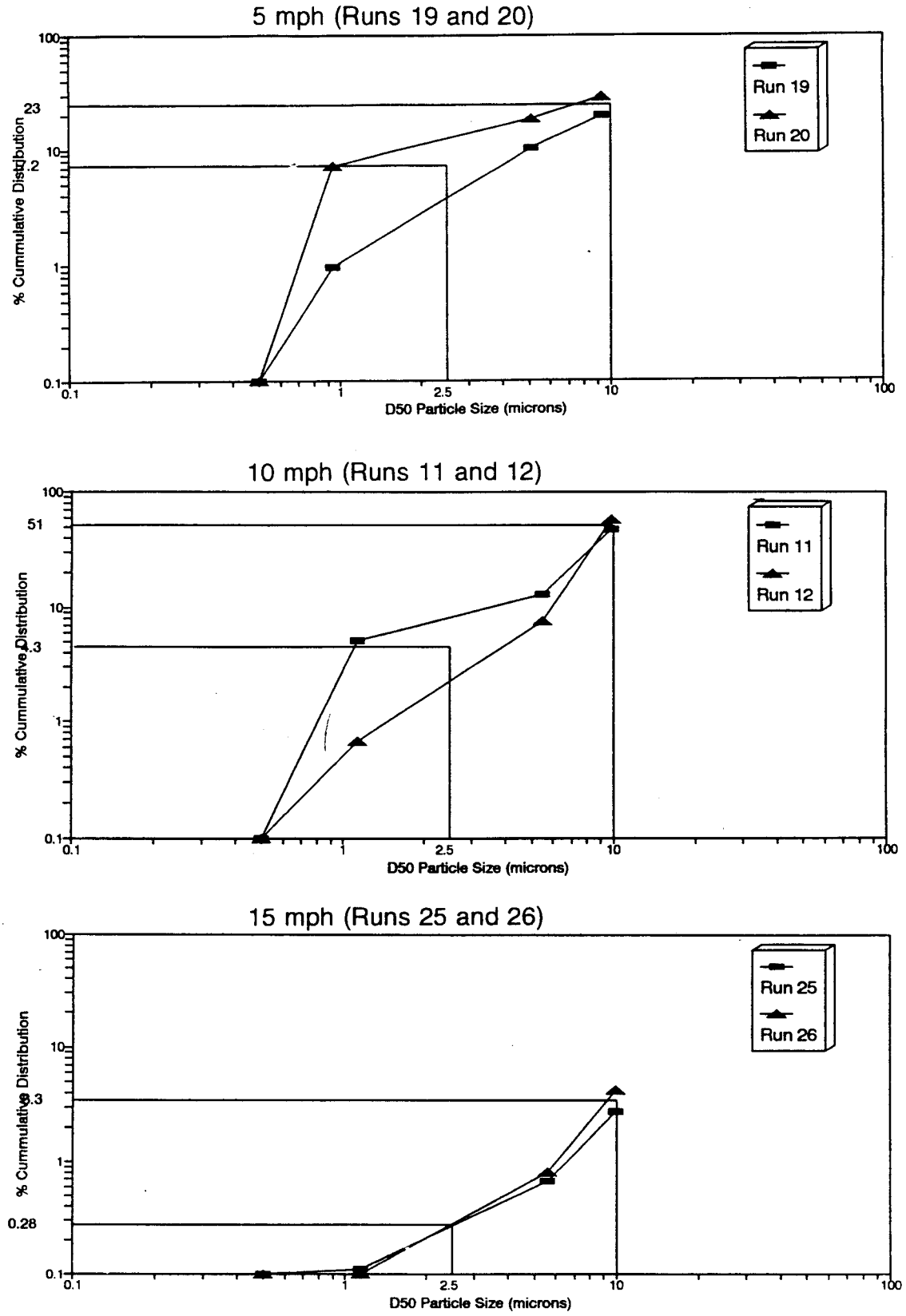

Figure 6-3. Cumulative particle size distributions for oxidized surface.

TABLE 6-4. SUMMARY OF PARTICULATE CONCENTRATION DATA OBTAINED DURING TESTING

Operating condition	Test runs	Total particulate concentration (mg/dscm)[a]	Gas flow rate (dscm/min)	Total particulate emissions (kg/h)	Percentage of particulate emissions ≤ 10 μmA[b]	PM-10 concentration (mg/dscm)	PM-10 emissions (kg/h)	Percentage of particulate emissions ≤ 2.5 μmA[b]	PM-2.5 concentration (mg/dscm)	PM-2.5 emissions (kg/h)
Clean Surface										
5 MPH	17/18	122.7	690	5.06	60	73.6	3.05	8.3	10.18	0.42
10 MPH	9/10	168.7	1,802	18.4	12	20.2	2.19	3.2	5.40	0.58
15 MPH	23/24	157.2	2,562	24.5	5	7.86	1.21	1.0	1.57	0.24
Average		149.5				33.9			5.72	
Painted Surface										
5 MPH	15/16	167.0	842	8.42	22	36.7	1.86	3.5	5.85	0.30
10 MPH	7/8	177.5	1,876	19.7	73	129.6	14.6	1.2	2.13	0.24
15 MPH	21/22	158.4	2,525	23.9	10	15.8	2.40	1.4	2.22	0.34
Average		167.6				60.7			3.40	
Oxidized Surface										
5 MPH	19/20	141.2	901	7.65	23	32.5	1.76	7.2	10.17	0.55
10 MPH	11/12	65.5	1,766	6.92	51	33.4	3.54	4.3	2.82	0.30
15 MPH	25/26	195.3	2,413	27.9	3.3	6.44	0.93	0.28	0.55	0.08
Average		134.0				24.1			4.51	

[a] Average total particulate concentration as measured by the two MM5 sampling trains for particulate and metals.
[b] Aerodynamic diameter.

TABLE 6-5a. METAL (Cd, Cr, AND Fe) ANALYSIS RESULTS FOR PARTICLE SIZE SAMPLING TRAIN

		Geometric mean dia. (µmA)	Cd weight (µg)	Cd cum. (%)	Cd (100-cum. %)	Cr weight (µg)	Cr cum. (%)	Cr (100-cum. %)	Fe weight (µg)	Fe cum. (%)	Fe (100-cum. %)
Run 7	1st Stage	9.89	<0.003	0.73	99.27	4.7	5.75	94.25	234.7	21.43	78.57
	2nd Stage	5.54	<0.003	1.47	98.53	3.3	9.78	90.22	121.5	32.52	67.48
	3rd Stage	1.14	<0.003	2.20	97.80	55.3	77.38	22.62	283.9	58.44	41.56
	Thimble	0.50	0.4	100.00	0.00	18.5	100.00	0.00	455.2	100.00	0.00
Run 8	1st Stage	9.90	<0.003	33.33	66.67	10.6	6.22	93.78	330.5	20.68	79.32
	2nd Stage	5.54	<0.003	66.67	33.33	44.2	32.16	67.84	420.1	46.98	53.02
	3rd Stage	1.14	<0.003	100.00	0.00	66.6	71.24	28.76	306.9	66.18	33.82
	Thimble	0.50	0	100.00	0.00	49	100.00	0.00	540.3	100.00	0.00
Run 9	1st Stage	9.87	<0.003	33.33	66.67	1.5	2.80	97.20	506.3	40.12	59.88
	2nd Stage	5.51	<0.003	66.67	33.33	3.8	9.91	90.09	168.2	53.45	46.55
	3rd Stage	1.14	<0.003	100.00	0.00	29.1	64.30	35.70	161.5	66.24	33.76
	Thimble	0.50	0	100.00	0.00	19.1	100.00	0.00	426	100.00	0.00
Run 10	1st Stage	9.82	<0.004	33.33	66.67	0.7	0.78	99.22	456	34.11	65.89
	2nd Stage	5.47	<0.004	66.67	33.33	4.6	5.93	94.07	192	48.48	51.52
	3rd Stage	1.13	<0.004	100.00	0.00	68.2	82.21	17.79	307.6	71.49	28.51
	Thimble	0.50	0	100.00	0.00	15.9	100.00	0.00	381.1	100.00	0.00
Run 11	1st Stage	9.87	<0.004	3.57	96.43	0.7	1.24	98.76	1132.3	46.44	53.56
	2nd Stage	5.52	<0.004	7.14	92.86	0.8	2.65	97.35	517.9	67.68	32.32
	3rd Stage	1.13	<0.004	10.71	89.29	34.2	63.19	36.81	291.5	79.63	20.37
	Thimble	0.50	0.1	100.00	0.00	20.8	100.00	0.00	496.7	100.00	0.00
Run 12	1st Stage	9.73	<0.004	33.33	66.67	1.4	2.85	97.15	1541.3	49.89	50.11
	2nd Stage	5.42	<0.004	66.67	33.33	7.8	18.74	81.26	696.3	72.44	27.56
	3rd Stage	1.09	<0.004	100.00	0.00	22.3	64.15	35.85	386.1	84.93	15.07
	Thimble	0.50	0	100.00	0.00	17.6	100.00	0.00	465.4	100.00	0.00
Run 15	1st Stage	9.12	0.5	45.29	54.71	14	7.08	92.92	732.9	33.78	66.22
	2nd Stage	4.99	0.3	72.46	27.54	2.1	8.14	91.86	242.1	44.94	55.06
	3rd Stage	0.88	<0.004	72.83	27.17	139.6	78.72	21.28	641.1	74.50	25.50
	Thimble	0.50	0.3	100.00	0.00	42.1	100.00	0.00	553.3	100.00	0.00
Run 16	1st Stage	9.04	1.3	56.52	43.48	14.7	6.76	93.24	1072.8	40.55	59.45
	2nd Stage	4.93	0.4	73.91	26.09	5.6	9.34	90.66	314.1	52.42	47.58
	3rd Stage	0.86	0.4	91.30	8.70	169.1	87.16	12.84	885.7	85.90	14.10
	Thimble	0.50	0.2	100.00	0.00	27.9	100.00	0.00	373	100.00	0.00
Run 17	1st Stage	9.42	<0.004	3.57	96.43	0.6	1.24	98.76	146.2	11.83	88.17
	2nd Stage	5.21	<0.004	7.14	92.86	2.7	6.82	93.18	507.6	52.91	47.09
	3rd Stage	0.98	<0.004	10.71	89.29	25.4	59.30	40.70	159.3	65.80	34.20
	Thimble	0.50	0.1	100.00	0.00	19.7	100.00	0.00	422.6	100.00	0.00
Run 18	1st Stage	9.45	0.2	39.37	60.63	2	1.47	98.53	580.9	34.17	65.83
	2nd Stage	5.23	<0.004	40.16	59.84	3.1	3.76	96.24	178.8	44.69	55.31
	3rd Stage	0.99	<0.004	40.94	59.06	99.1	76.84	23.16	470	72.34	27.66
	Thimble	0.50	0.3	100.00	0.00	31.4	100.00	0.00	470.2	100.00	0.00

TABLE 6-5a (Continued)

		Geometric mean dia. (µmA)	Cd weight (µg)	Cd cum. (%)	Cd (100-cum. %)	Cr weight (µg)	Cr cum. (%)	Cr (100-cum. %)	Fe weight (µg)	Fe cum. (%)	Fe (100-cum. %)
Run 19	1st Stage	9.29	0.4	36.23	63.77	3.8	1.38	98.62	1000	21.23	78.77
	2nd Stage	5.11	<0.004	36.59	63.41	1.5	1.92	98.08	1229.8	47.35	52.65
	3rd Stage	0.94	0.3	63.77	36.23	245.8	90.88	9.12	1929.8	88.32	11.68
	Thimble	0.50	0.4	100.00	0.00	25.2	100.00	0.00	550	100.00	0.00
Run 20	1st Stage	9.29	0.1	49.02	50.98	3.4	2.02	97.98	3572.8	54.34	45.66
	2nd Stage	5.11	<0.002	50.00	50.00	2.1	3.26	96.74	1142.8	71.72	28.28
	3rd Stage	0.94	<0.002	50.98	49.02	134.9	83.22	16.78	1231.3	90.45	9.55
	Thimble	0.50	0.1	100.00	0.00	28.3	100.00	0.00	628	100.00	0.00
Run 21	1st Stage	9.90	0.8	38.10	61.90	6	4.93	95.07	593.6	44.30	55.70
	2nd Stage	5.57	0.2	47.62	52.38	5	9.05	90.95	162.1	56.39	43.61
	3rd Stage	1.13	0.5	71.43	28.57	92.8	85.36	14.64	403.6	86.51	13.49
	Thimble	0.50	0.6	100.00	0.00	17.8	100.00	0.00	180.8	100.00	0.00
Run 22	1st Stage	9.98	2.3	69.70	30.30	11.7	7.84	92.16	688.5	35.06	64.94
	2nd Stage	5.62	0.7	90.91	9.09	5.4	11.46	88.54	287.9	49.72	50.28
	3rd Stage	1.15	0.3	100.00	0.00	111.8	86.39	13.61	563.9	78.43	21.57
	Thimble	0.50	0	100.00	0.00	20.3	100.00	0.00	423.5	100.00	0.00
Run 23	1st Stage	9.87	0.2	65.79	34.21	2.4	2.71	97.29	411.4	34.64	65.36
	2nd Stage	5.55	<0.002	66.45	33.55	0.6	3.39	96.61	113.2	44.17	55.83
	3rd Stage	1.11	<0.002	67.11	32.89	52.4	62.60	37.40	223.4	62.97	37.03
	Thimble	0.50	0.1	100.00	0.00	33.1	100.00	0.00	439.8	100.00	0.00
Run 24	1st Stage	9.90	0.1	24.88	75.12	2.5	3.62	96.38	404.2	35.51	64.49
	2nd Stage	5.58	<0.002	25.37	74.63	3.1	8.12	91.88	130	46.93	53.07
	3rd Stage	1.12	0.2	75.12	24.88	45.4	73.91	26.09	195.5	64.10	35.90
	Thimble	0.50	0.1	100.00	0.00	18	100.00	0.00	408.6	100.00	0.00
Run 25	1st Stage	9.94	0.1	95.24	4.76	1.9	4.46	95.54	1516.8	67.25	32.75
	2nd Stage	5.59	<0.003	98.10	1.90	0.4	5.40	94.60	360.4	83.23	16.77
	3rd Stage	1.14	<0.002	100.00	0.00	23.8	61.27	38.73	146.1	89.71	10.29
	Thimble	0.50	0	100.00	0.00	16.5	100.00	0.00	232.1	100.00	0.00
Run 26	1st Stage	9.94	0.2	66.23	33.77	2.9	4.32	95.68	1565.3	59.79	40.21
	2nd Stage	5.59	0.002	66.89	33.11	2.9	8.63	91.37	349.7	73.14	26.86
	3rd Stage	1.14	0.1	100.00	0.00	45.5	76.34	23.66	283.2	83.96	16.04
	Thimble	0.50	0	100.00	0.00	15.9	100.00	0.00	420	100.00	0.00

TABLE 6-5b. METAL (Mn, Ni, AND Pb) ANALYSIS RESULTS FOR PARTICLE SIZE SAMPLING TRAIN

		Geometric Mean dia. (µmA)	Mn weight (µg)	Mn cum. (%)	Mn (100-cum. %)	Ni weight (µg)	Ni cum. (%)	Ni (100-cum. %)	Pb weight (µg)	Pb cum. (%)	Pb (100-cum. %)
Run 7	1st Stage	9.89	2.7	21.77	78.23	5.2	13.47	86.53	11.9	27.55	72.45
	2nd Stage	5.54	2	37.90	62.10	2.7	20.47	79.53	4.9	38.89	61.11
	3rd Stage	1.14	6	86.29	13.71	27.9	92.75	7.25	3	45.83	54.17
	Thimble	0.50	1.7	100.00	0.00	2.8	100.00	0.00	23.4	100.00	0.00
Run 8	1st Stage	9.90	3	14.22	85.78	3.1	5.57	94.43	30.8	24.84	75.16
	2nd Stage	5.54	7.3	48.82	51.18	15.6	33.57	66.43	54.4	68.71	31.29
	3rd Stage	1.14	7.5	84.36	15.64	25.7	79.71	20.29	14.3	80.24	19.76
	Thimble	0.50	3.3	100.00	0.00	11.3	100.00	0.00	24.5	100.00	0.00
Run 9	1st Stage	9.87	2.4	33.80	66.20	3.7	13.75	86.25	1.9	7.63	92.37
	2nd Stage	5.51	1.3	52.11	47.89	1.8	20.45	79.55	2.4	17.27	82.73
	3rd Stage	1.14	2.8	91.55	8.45	13.4	70.26	29.74	1.6	23.69	76.31
	Thimble	0.50	0.6	100.00	0.00	8	100.00	0.00	19	100.00	0.00
Run 10	1st Stage	9.82	2.1	17.95	82.05	2.1	5.75	94.25	<0.04	0.28	99.72
	2nd Stage	5.47	2.3	37.61	62.39	3	13.97	86.03	<0.04	0.57	99.43
	3rd Stage	1.13	7.3	100.00	0.00	30.2	96.71	3.29	<0.04	0.85	99.15
	Thimble	0.50	0	100.00	0.00	1.2	100.00	0.00	14	100.00	0.00
Run 11	1st Stage	9.87	5.6	45.90	54.10	2.9	10.70	89.30	6.3	28.93	71.07
	2nd Stage	5.52	2.9	69.67	30.33	2.7	20.66	79.34	<0.04	29.11	70.89
	3rd Stage	1.13	3.7	100.00	0.00	15	76.01	23.99	<0.04	29.29	70.71
	Thimble	0.50	0	100.00	0.00	6.5	100.00	0.00	15.4	100.00	0.00
Run 12	1st Stage	9.73	7.2	45.00	55.00	2.6	11.45	88.55	5.6	27.40	72.60
	2nd Stage	5.42	5.1	76.88	23.13	4.1	29.52	70.48	2.2	38.16	61.84
	3rd Stage	1.09	3.7	100.00	0.00	8.3	66.08	33.92	<0.04	38.36	61.64
	Thimble	0.50	0	100.00	0.00	7.7	100.00	0.00	12.6	100.00	0.00
Run 15	1st Stage	9.12	5.4	25.47	74.53	7.9	8.81	91.19	21.1	42.28	57.72
	2nd Stage	4.99	2.1	35.38	64.62	1.5	10.48	89.52	4.7	51.70	48.30
	3rd Stage	0.88	11	87.26	12.74	67.9	86.18	13.82	1.3	54.31	45.69
	Thimble	0.50	2.7	100.00	0.00	12.4	100.00	0.00	22.8	100.00	0.00
Run 16	1st Stage	9.04	8	29.96	70.04	5.2	5.37	94.63	34.9	59.86	40.14
	2nd Stage	4.93	2.7	40.07	59.93	3	8.47	91.53	5.2	68.78	31.22
	3rd Stage	0.86	16	100.00	0.00	78.2	89.26	10.74	4	75.64	24.36
	Thimble	0.50	0	100.00	0.00	10.4	100.00	0.00	14.2	100.00	0.00
Run 17	1st Stage	9.42	0.8	15.69	84.31	0.018	0.09	99.91	<0.024	0.81	99.19
	2nd Stage	5.21	2.1	56.86	43.14	1.3	6.75	93.25	1.8	61.87	38.13
	3rd Stage	0.98	2.2	100.00	0.00	11.7	66.70	33.30	<0.024	62.69	37.31
	Thimble	0.50	0	100.00	0.00	6.5	100.00	0.00	1.1	100.00	0.00
Run 18	1st Stage	9.45	2.3	19.17	80.83	1.8	3.00	97.00	<0.024	0.11	99.89
	2nd Stage	5.23	1.1	28.33	71.67	3	8.00	92.00	<0.024	0.22	99.78
	3rd Stage	0.99	8.1	95.83	4.17	45.5	83.83	16.17	1.8	8.66	91.34
	Thimble	0.50	0.5	100.00	0.00	9.7	100.00	0.00	19.5	100.00	0.00

TABLE 6-5b (Continued)

		Geometric Mean dia. (µmA)	Mn weight (µg)	Mn cum. (%)	Mn (100-cum. %)	Ni weight (µg)	Ni cum. (%)	Ni (100-cum. %)	Pb weight (µg)	Pb cum. (%)	Pb (100-cum. %)
Run 19	1st Stage	9.29	14.4	34.78	65.22	3.7	2.74	97.26	54.3	53.87	46.13
	2nd Stage	5.11	5.1	47.10	52.90	1.7	4.00	96.00	13.4	67.16	32.84
	3rd Stage	0.94	21.6	99.28	0.72	124.1	96.00	4.00	11.1	78.17	21.83
	Thimble	0.50	0.3	100.00	0.00	5.4	100.00	0.00	22	100.00	0.00
Run 20	1st Stage	9.29	13.2	42.04	57.94	3.6	4.65	95.35	44.1	54.85	45.15
	2nd Stage	5.11	4.6	56.69	43.31	2	7.23	92.77	10.9	68.41	31.59
	3rd Stage	0.94	13.3	99.04	0.96	64.7	90.71	9.29	7.3	77.49	22.51
	Thimble	0.50	0.3	100.00	0.00	7.2	100.00	0.00	18.1	100.00	0.00
Run 21	1st Stage	9.90	2.8	25.93	74.07	2.5	4.35	95.65	21.2	54.72	45.28
	2nd Stage	5.57	1.1	36.11	63.89	2.6	8.87	91.13	2.1	60.14	39.86
	3rd Stage	1.13	6.9	100.00	0.00	48.5	93.22	6.78	<0.043	60.25	39.75
	Thimble	0.50	0	100.00	0.00	3.9	100.00	0.00	15.4	100.00	0.00
Run 22	1st Stage	9.98	3.4	24.46	75.54	3.5	4.84	95.16	35.6	64.49	35.51
	2nd Stage	5.62	1.7	36.69	63.31	3.6	9.82	90.18	4.7	73.01	26.99
	3rd Stage	1.15	8.8	100.00	0.00	56.6	88.11	11.89	2.1	76.81	23.19
	Thimble	0.50	0	100.00	0.00	8.6	100.00	0.00	12.8	100.00	0.00
Run 23	1st Stage	9.87	1.7	28.33	71.67	1.8	4.67	95.33	<0.043	0.26	99.74
	2nd Stage	5.55	0.6	38.33	61.67	0.008	4.70	95.30	<0.043	0.53	99.47
	3rd Stage	1.11	3.7	100.00	0.00	26.9	74.55	25.45	<0.043	0.79	99.21
	Thimble	0.50	0	100.00	0.00	9.8	100.00	0.00	16.2	100.00	0.00
Run 24	1st Stage	9.90	1.6	26.23	73.77	1.6	5.86	94.14	<0.043	0.23	99.77
	2nd Stage	5.58	0.8	39.34	60.66	2	13.19	86.81	<0.043	0.46	99.54
	3rd Stage	1.12	3.7	100.00	0.00	21.8	93.04	6.96	<0.043	0.69	99.31
	Thimble	0.50	0	100.00	0.00	1.9	100.00	0.00	18.7	100.00	0.00
Run 25	1st Stage	9.94	5	60.24	39.76	1	4.48	95.52	32.2	65.66	34.34
	2nd Stage	5.59	1.5	78.31	21.69	0.008	4.52	95.48	3.8	73.40	26.60
	3rd Stage	1.14	1.8	100.00	0.00	11.6	56.52	43.48	<0.043	73.49	26.51
	Thimble	0.50	0	100.00	0.00	9.7	100.00	0.00	13	100.00	0.00
Run 26	1st Stage	9.94	5	44.64	55.36	1.9	6.05	93.95	34.2	59.23	40.77
	2nd Stage	5.59	1.6	58.93	41.07	1.5	10.83	89.17	5.6	68.93	31.07
	3rd Stage	1.14	4.6	100.00	0.00	23.9	86.94	13.06	<0.043	69.00	31.00
	Thimble	0.50	0	100.00	0.00	4.1	100.00	0.00	17.9	100.00	0.00

It should be noted that the thimble analysis results for Cd, Cr, Fe, and Pb were blank corrected based on the analytical results from the blank thimble. The procedure described in the *EPA Methods Manual for Compliance with BIF Regulations*, EPA/530-SW-91-010, PB-91-120-006, December 1990, ("Methodology for the Determination of Metals Emissions in Gases from Hazardous Waste Incinerators and Similar Combustion Sources") was used as follows:

If the blank thimble analysis result m_{tb} was between 0 and A µg, where A is equal to 1.4 µg/in^2 multiplied by the actual area of the thimble used in the sampling train, the thimble blank correction value was set equal to m_{tb}. Because the thimbles were 80 mm long with a diameter of 33 mm, A is equal to 19.85 µg.

If m_{tb} was greater than A (19.85 µg), the greater of the following was used as the blank correction,

1. A (19.85 µg)
2. The lesser of m_{tb} or 5% of the actual thimble analysis result, m_t.

If m_{tb} was less than the detection limit, the correction value was set equal to zero.

The PM-10 and PM-2.5 concentrations of each metal were determined based on the cumulative particle size distribution. This was accomplished by averaging the cumulative percent results for the paired HCSS runs, and graphically determining the cumulative percent distribution values for 10 µmA and 2.5 µmA. For each metal, the average cumulative percent values for 10 µmA and 2.5 µmA were multiplied by the total particulate metal concentration from the MM5 results (Table 6-2) to determine the PM-10 and PM-2.5 concentrations.

SECTION 7

DEVELOPMENT OF PARTICULATE EMISSION FACTORS

To calculate appropriate emission factors for uncontrolled abrasive blasting, the emission rate of the pollutants of interest can be correlated to one or more parameters relating to source activity. At this point, the emission factors are expressed in terms of mass of pollutant emitted per unit mass of abrasive used. However, other forms of emission factors, expressed in appropriate terms and units of measure (e.g., area cleaned, wind speed), could also be determined from the data collected. The following outlines the basic calculation scheme used for the determination of emission factors in the experimental program.

The emission factor for each size fraction was calculated as follows:

$$e_x = \frac{E_x t}{w} \qquad (7\text{-}1)$$

where: e_x = emission factor for size fraction x (kg/Mg)

E_x = emission rate for size fraction x (g/h)

t = total run time (h)

w = weight of abrasive used (kg)

7.1 PARTICULATE MATTER

Table 7-1 presents the total particulate emission factors obtained in terms of kg of emissions per kg of sand fed. Also indicated in Table 7-1 are the mass balance results obtained in the study. Tables 7-2 and 7-3 present the PM-10 and PM-2.5 emission factor results, respectively.

TABLE 7-1. TOTAL PARTICULATE EMISSION FACTORS

Operating condition	Run	Total particulate concentration (mg/dscm)	Total particulate emission rate (kg/hr)	Net sand use rate (lb/min)	Total particulate emission factor (kg/kg sand)[a]	Result of mass balance (% closure)[b]
Preliminary Test Runs						
5 MPH	5/6	752.3	87.0	10.5	0.30	110
10 MPH	3/4	209.0	12.6	9.5	0.049	100
15 MPH	1/2	896.0	162.7	10.0	0.60	70
Average Emission Factor					0.32	–
Clean Surface						
5 MPH	17/18	122.7	5.06	6.5	0.029	100
10 MPH	9/10	168.7	18.4	9.9	0.068	95
15 MPH	23/24	157.2	24.5	9.8	0.092	86
Average Emission Factor					0.063	
Painted Surface						
5 MPH	15/16	167.0	8.42	11.5	0.027	99
10 MPH	7/8	177.5	19.7	10.3	0.070	98
15 MPH	21/22	158.4	23.9	9.7	0.091	79
Average Emission Factor					0.063	
Oxidized Surface						
5 MPH	19/20	141.2	7.65	11.3	0.025	100
10 MPH	11/12	65.5	6.92	9.6	0.026	100
15 MPH	25/26	195.3	27.9	11.5	0.089	82
Average Emission Factor					0.047	

[a] Rounded to two significant figures.

[b] $$\text{Percent closure} = \frac{\text{total sand recovered} - \text{total particulate emissions}}{\text{total sand fed to tunnel}} \times 100$$

TABLE 7-2. PM-10 EMISSION FACTORS[a]

Operating condition	Run	PM-10 concentration (mg/dscm)	PM-10 emission rate (kg/hr)	Net sand use rate (lb/min)	PM-10 emission factor (kg/kg sand)[b]
Clean Surface					
5 MPH	17/18	73.62	3.05	6.5	0.017
10 MPH	9/10	20.24	2.19	9.9	0.0081
15 MPH	23/24	7.86	1.21	9.8	0.0045
Average Emission Factor					0.0099
Painted Surface					
5 MPH	15/16	36.74	1.86	11.5	0.0059
10 MPH	7/8	129.58	14.59	10.3	0.052
15 MPH	21/22	15.84	2.40	9.7	0.0091
Average Emission Factor					0.022
Oxidized Surface					
5 MPH	19/20	32.48	1.76	11.3	0.0057
10 MPH	11/12	33.41	3.54	9.6	0.014
15 MPH	25/26	6.44	0.93	11.5	0.0030
Average Emission Factor					0.0074

[a] Particles ≤ 10 μm in aerodynamic diameter (unit density spheres).

[b] Rounded to two significant figures.

TABLE 7-3. PM-2.5 EMISSION FACTORS[a]

Operating condition	Run	PM-2.5 concentration (mg/dscm)	PM-2.5 emission rate (kg/hr)	Net sand use rate (lb/min)	PM-2.5 emission factor (kg/kg sand)[b]
Clean Surface					
5 MPH	17/18	10.18	0.42	6.5	0.0024
10 MPH	9/10	5.40	0.58	9.9	0.0022
15 MPH	23/24	1.57	0.24	9.8	0.00090
Average Emission Factor					0.0018
Painted Surface					
5 MPH	15/16	5.85	0.30	11.5	0.0010
10 MPH	7/8	2.13	0.24	10.3	0.00086
15 MPH	21/22	2.22	0.34	9.7	0.0013
Average Emission Factor					0.0011
Oxidized Surface					
5 MPH	19/20	10.17	0.55	11.3	0.0018
10 MPH	11/12	2.82	0.30	9.6	0.0011
15 MPH	25/26	0.55	0.08	11.5	0.00026
Average Emission Factor					0.0011

[a] Particles ≤ 2.5 μm in aerodynamic diameter (unit density spheres).

[b] Rounded to two significant figures.

7.2 METALS

The total particulate, PM-10, and PM-2.5 concentration and emission results are summarized in Tables 7-4 through 7-9 for cadmium, chromium, iron, manganese, nickel, and lead, respectively. Table 7-10 presents the total particulate emission factors for each metal expressed in terms of kg of emissions per kg of sand fed. Table 7-11 and 7-12 present the PM-10 and PM-2.5 emission factors for each metal, respectively.

TABLE 7-4. SUMMARY OF TOTAL, PM-10, AND PM-2.5 CADMIUM CONCENTRATIONS AND EMISSIONS

Operating condition	Test run	Gas flow rate (dscm/min)	Total Cd particulate concentration (µg/dscm)[a]	Total cadmium emissions (kg/hr)	Percentage Cd of particulate emissions < 10 µmA	PM-10 Cd emission concentration (µg/dscm)	PM-10 cadmium emissions (kg/hr)	Percentage Cd of particulate emissions < 2.5 µmA	PM-2.5 Cd emission concentration (µg/dscm)	PM-2.5 cadmium emissions (kg/hr)
Clean Surface										
5 MPH	17/18	690	7.8	0.00032	99	7.7	0.00032	78	6.0	0.00025
10 MPH	9/10	1802	1.8	0.00019	-b	-b	-b	-b	-b	-b
15 MPH	23/24	2562	3.1	0.00048	75	2.3	0.00036	45	1.4	0.00021
Average						-b			-b	
Painted Surface										
5 MPH	15/16	842	5.9	0.00030	50	3.0	0.00015	22	1.3	0.000066
10 MPH	7/8	1876	2.7	0.00030	-b	-b	-b	-b	-b	-b
15 MPH	21/22	2525	11.1	0.00167	45	5.0	0.00075	0.9	0.1	0.000015
Average						-b			-b	
Oxidized Surface										
5 MPH	19/20	901	3.7	0.00020	58	2.1	0.00011	49	1.8	0.00010
10 MPH	11/12	1766	2.9	0.00031	-b	-b	-b	-b	-b	-b
15 MPH	25/26	2413	3.4	0.00049	14	0.48	0.000069	0.2	0.01	0.00000098
Average						-b			-b	

[a] Average total particulate metal concentration as measured by the two PM/MM sampling trains for particulate and metals.
[b] Cadmium was not detected in any of the particle sizing fractions and therefore the calculations could not be performed.

TABLE 7-5. SUMMARY OF TOTAL, PM-10, AND PM-2.5 CHROMIUM CONCENTRATIONS AND EMISSIONS

Operating condition	Test run	Gas flow rate (dscm/min)	Total Cr particulate concentration (µg/dscm)[a]	Total chromium emissions (kg/hr)	Percentage Cr of particulate emissions < 10 µmA	PM-10 Cr emission concentration (µg/dscm)	PM-10 chromium emissions (kg/hr)	Percentage Cr of particulate emissions < 2.5 µmA	PM-2.5 Cr emission concentration (µg/dscm)	PM-2.5 chromium emissions (kg/hr)
Clean Surface										
5 MPH	17/18	690	10.5	0.00043	99	10.4	0.00043	60	6.3	0.00026
10 MPH	9/10	1802	16.3	0.00176	98	15.9	0.00172	50	8.1	0.00088
15 MPH	23/24	2562	16.6	0.00255	99	16.4	0.00253	56	9.3	0.00143
Average						14.3			7.9	
Painted Surface										
5 MPH	15/16	842	26.4	0.00133	93	24.5	0.00124	49	12.9	0.00065
10 MPH	7/8	1876	21.8	0.00245	92	20.0	0.00225	46	10.0	0.00113
15 MPH	21/22	2525	34.0	0.00514	93	31.6	0.00478	38	12.9	0.00195
Average						25.4			11.9	
Oxidized Surface										
5 MPH	19/20	901	7.9	0.00043	99	7.8	0.00043	43	3.4	0.00018
10 MPH	11/12	1766	12.8	0.00136	98	12.5	0.00133	58	7.4	0.00079
15 MPH	25/26	2413	15.6	0.00225	96	14.9	0.00216	52	8.1	0.001171
Average						11.7			6.3	

[a] Average total particulate metal concentration as measured by the two PM/MM sampling trains for particulate and metals.

TABLE 7-6. SUMMARY OF TOTAL, PM-10, AND PM-2.5 IRON CONCENTRATIONS AND EMISSIONS

Operating condition	Test run	Gas flow rate (dscm/min)	Total Fe particulate concentration (µg/dscm)[a]	Total iron emissions (kg/hr)	Percentage Fe of particulate emissions < 10 µmA	PM-10 Fe emission concentration (µg/dscm)	PM-10 iron emissions (kg/hr)	Percentage Fe of particulate emissions < 2.5 µmA	PM-2.5 Fe emission concentration (µg/dscm)	PM-2.5 iron emissions (kg/hr)
Clean Surface										
5 MPH	17/18	690	1,192	0.0493	77	917	0.0380	41	489	0.0202
10 MPH	9/10	1802	1,270	0.1373	60	762	0.0824	40	508	0.0549
15 MPH	23/24	2562	729	0.1120	65	474	0.0728	44	321	0.0493
Average						718			439	
Painted Surface										
5 MPH	15/16	842	1,770	0.0894	62	1,097	0.0554	35	620	0.0313
10 MPH	7/8	1876	883	0.0994	78	689	0.0775	46	406	0.0457
15 MPH	21/22	2525	893	0.1352	58	518	0.0784	29	259	0.0392
Average						768			428	
Oxidized Surface										
5 MPH	19/20	901	3,502	0.1893	61	2,136	0.1155	22	770	0.0416
10 MPH	11/12	1766	3,889	0.4120	52	2,022	0.2143	12	467	0.0494
15 MPH	25/26	2413	2,792	0.4042	37	1,033	0.1495	17	475	0.0687
Average						1,730			571	

[a] Average total particulate metal concentration as measured by the two PM/MM sampling trains for particulate and metals.

TABLE 7-7. SUMMARY OF TOTAL, PM-10, AND PM-2.5 MANGANESE CONCENTRATIONS AND EMISSIONS

Operating condition	Test run	Gas flow rate (dscm/min)	Total Mn particulate concentration (µg/dscm)[a]	Total manganese emissions (kg/hr)	Percentage Mn of particulate emissions < 10 µmA	PM-10 Mn emission concentration (µg/dscm)	PM-10 manganese emissions (kg/hr)	Percentage Mn of particulate emissions < 2.5 µmA	PM-2.5 Mn emission concentration (µg/dscm)	PM-2.5 manganese emissions (kg/hr)
Clean Surface										
5 MPH	17/18	690	6.6	0.00027	82	5.4	0.00022	10	0.7	0.000027
10 MPH	9/10	1802	7.3	0.00078	71	5.1	0.00056	8.3	0.6	0.000065
15 MPH	23/24	2562	4.1	0.00062	70	2.8	0.00044	3	0.1	0.000019
Average						4.5			0.5	
Painted Surface										
5 MPH	15/16	842	12.1	0.00061	72	8.7	0.00044	15	1.8	0.000092
10 MPH	7/8	1876	10.0	0.00113	80	8.0	0.00090	30	3.0	0.00034
15 MPH	21/22	2525	6.9	0.00105	75	5.2	0.00078	3	0.2	0.000032
Average						7.3			1.7	
Oxidized Surface										
5 MPH	19/20	901	23.7	0.00128	58	13.7	0.00074	10	2.4	0.00013
10 MPH	11/12	1766	30.7	0.00325	53	16.3	0.00172	1.9	0.6	0.000062
15 MPH	25/26	2413	9.8	0.00142	44	4.3	0.00062	1.9	0.2	0.000027
Average						11.4			1.1	

[a] Average total particulate metal concentration as measured by the two PM/MM sampling trains for particulate and metals.

TABLE 7-8. SUMMARY OF TOTAL, PM-10, AND PM-2.5 NICKEL CONCENTRATIONS AND EMISSIONS

Operating condition	Test run	Gas flow rate (dscm/min)	Total Ni particulate concentration (µg/dscm)[a]	Total nickel emissions (kg/hr)	Percentage Ni of particulate emissions < 10 µmA	PM-10 Ni emission concentration (µg/dscm)	PM-10 nickel emissions (kg/hr)	Percentage Ni of particulate emissions < 2.5 µmA	PM-2.5 Ni emission concentration (µg/dscm)	PM-2.5 nickel emissions (kg/hr)
Clean Surface										
5 MPH	17/18	690	8.7	0.00036	99	8.6	0.00036	53	4.6	0.00019
10 MPH	9/10	1802	12.3	0.00133	90	11.1	0.00120	32	3.9	0.00043
15 MPH	23/24	2562	13.8	0.00212	95	13.1	0.00202	38	5.2	0.00081
Average						10.9			4.6	
Painted Surface										
5 MPH	15/16	842	12.7	0.00064	93	11.8	0.00059	42	5.3	0.00027
10 MPH	7/8	1876	11.6	0.00131	90	10.4	0.00118	32	3.7	0.00042
15 MPH	21/22	2525	47.2	0.00715	95	44.8	0.00679	30	14.2	0.00215
Average						22.3			7.7	
Oxidized Surface										
5 MPH	19/20	901	7.3	0.00039	96	7.0	0.00038	33	2.4	0.00013
10 MPH	11/12	1766	17.5	0.00185	89	15.5	0.00165	48	8.4	0.00089
15 MPH	25/26	2413	17.9	0.00258	95	17.0	0.00246	49	8.7	0.00127
Average						13.2			6.5	

[a] Average total particulate metal concentration as measured by the two PM/MM sampling trains for particulate and metals.

TABLE 7-9. SUMMARY OF TOTAL, PM-10, AND PM-2.5 LEAD CONCENTRATIONS AND EMISSIONS

Operating condition	Test run	Gas flow rate (dscm/min)	Total Pb particulate concentration (µg/dscm)[a]	Total lead emissions (kg/hr)	Percentage Pb of particulate emissions < 10 µmA	PM-10 Pb emission concentration (µg/dscm)	PM-10 lead emissions (kg/hr)	Percentage Pb of particulate emissions < 2.5 µmA	PM-2.5 Pb emission concentration (µg/dscm)	PM-2.5 lead emissions (kg/hr)
Clean Surface										
5 MPH	17/18	690	7.7	0.00032	99	7.6	0.00032	63	4.9	0.00020
10 MPH	9/10	1802	3.4	0.00036	99	3.3	0.00036	89	3.0	0.00032
15 MPH	23/24	2562	6.8	0.00105	99	6.7	0.00103	99	6.7	0.00103
Average						5.9			4.9	
Painted Surface										
5 MPH	15/16	842	44.1	0.00223	49	21.6	0.00109	39	17.2	0.00087
10 MPH	7/8	1876	35.8	0.00402	73	26.1	0.00294	39	13.9	0.00157
15 MPH	21/22	2525	34.4	0.00521	40	13.8	0.00208	32	11.0	0.00167
Average						20.5			14.0	
Oxidized Surface										
5 MPH	19/20	901	88.5	0.00478	45	39.8	0.00215	29	25.7	0.00139
10 MPH	11/12	1766	19.3	0.00204	72	13.9	0.00147	63	12.1	0.00129
15 MPH	25/26	2413	49.1	0.00710	37	18.1	0.00263	29	14.2	0.00206
Average						23.9			17.3	

[a] Average total particulate metal concentration as measured by the two PM/MM sampling trains for particulate and metals.

TABLE 7-10. SUMMARY OF EMISSION FACTORS FOR TOTAL METAL PARTICULATE

Operating condition	Test run	Net sand use rate (lb/min)	Total cadmium emissions (kg/hr)	Total cadmium emission factor (kg/kg)	Total chromium emissions (kg/hr)	Total chromium emission factor (kg/kg)	Total iron emissions (kg/hr)	Total iron emission factor (kg/kg)	Total manganese emissions (kg/hr)	Total manganese emission factor (kg/kg)	Total nickel emissions (kg/hr)	Total nickel emission factor (kg/kg)	Total lead emissions (kg/hr)	Total lead emission factor (kg/kg)
Clean Surface														
5 MPH	17/18	6.5	0.00032	1.8e-06	0.00043	2.5e-06	0.0493	2.8e-04	0.00027	1.5e-06	0.00036	2.0e-06	0.00032	1.8e-06
10 MPH	9/10	9.9	0.00019	7.0e-07	0.00176	6.5e-06	0.1373	5.1e-04	0.00078	2.9e-06	0.00133	4.9e-06	0.00036	1.3e-06
15 MPH	23/24	9.8	0.00048	1.8e-06	0.00255	9.6e-06	0.1120	4.2e-04	0.00062	2.3e-06	0.00212	8.0e-06	0.00105	3.9e-06
Average Emission Factor				1.4e-06		6.2e-06		4.0e-04		2.3e-06		5.0e-06		2.4e-06
Painted Surface														
5 MPH	15/16	11.5	0.00030	9.5e-07	0.00133	4.3e-06	0.0894	2.9e-04	0.00061	2.0e-06	0.00064	2.0e-06	0.00223	7.1e-06
10 MPH	7/8	10.3	0.00030	1.1e-06	0.00245	8.7e-06	0.0994	3.5e-04	0.00113	4.0e-06	0.00131	4.7e-06	0.00402	1.4e-05
15 MPH	21/22	9.7	0.00167	6.3e-06	0.00514	1.9e-05	0.1352	5.1e-04	0.00105	4.0e-06	0.00715	2.7e-05	0.00521	2.0e-05
Average Emission Factor				2.8e-06		1.1e-05		3.8e-04		3.3e-06		1.1e-05		1.4e-05
Oxidized Surface														
5 MPH	19/20	11.3	0.00020	6.4e-07	0.00043	1.4e-06	0.1893	6.2e-04	0.00128	4.2e-06	0.00039	1.3e-06	0.00478	1.6e-05
10 MPH	11/12	9.6	0.00031	1.2e-06	0.00136	5.2e-06	0.4120	1.6e-03	0.00325	1.2e-05	0.00185	7.1e-06	0.00204	7.8e-06
15 MPH	25/26	11.5	0.00049	1.6e-06	0.00225	7.2e-06	0.4042	1.3e-03	0.00142	4.5e-06	0.00258	8.3e-06	0.00710	2.3e-05
Average Emission Factor				1.1e-06		4.6e-06		1.2e-03		7.1e-06		5.5e-06		1.5e-05

TABLE 7-11. SUMMARY OF EMISSION FACTORS FOR PM-10 METAL PARTICULATE

Operating condition	Test run	Net sand use rate (lb/min)	PM-10 cadmium emissions (kg/hr)	PM-10 cadmium emission factor (kg/kg)	PM-10 chromium emissions (kg/hr)	PM-10 chromium emission factor (kg/kg)	PM-10 iron emissions (kg/hr)	PM-10 iron emission factor (kg/kg)	PM-10 manganese emissions (kg/hr)	PM-10 manganese emission factor (kg/kg)	PM-10 nickel emissions (kg/hr)	PM-10 nickel emission factor (kg/kg)	PM-10 lead emissions (kg/hr)	PM-10 lead emission factor (kg/kg)
Clean Surface														
5 MPH	17/18	6.5	0.00032	1.8e-06	0.00043	2.4e-06	0.0380	2.1e-04	0.00022	1.3e-06	0.00036	2.0e-06	0.00032	1.8e-06
10 MPH	9/10	9.9	-a	-a	0.00172	6.4e-06	0.0824	3.1e-04	0.00056	2.1e-06	0.00120	4.4e-06	0.00036	1.3e-06
15 MPH	23/24	9.8	0.00036	1.3e-06	0.00253	9.5e-06	0.0728	2.7e-04	0.00044	1.6e-06	0.00202	7.6e-06	0.00103	3.9e-06
Average Emission Factor				-a		6.1e-06		2.6e-04		1.7e-06		4.7e-06		2.3e-06
Painted Surface														
5 MPH	15/16	11.5	0.00015	4.8e-07	0.00124	4.0e-06	0.0554	1.8e-04	0.00044	1.4e-06	0.00059	1.9e-06	0.00109	3.5e-06
10 MPH	7/8	10.3	-a	-a	0.00225	8.0e-06	0.0775	2.8e-04	0.00090	3.2e-06	0.00118	4.2e-06	0.00294	1.0e-05
15 MPH	21/22	9.7	0.00075	2.9e-06	0.00478	1.8e-05	0.0784	3.0e-04	0.00078	3.0e-06	0.00679	2.6e-05	0.00208	7.9e-06
Average Emission Factor				-a		1.0e-05		2.5e-04		2.5e-06		1.1e-05		7.3e-06
Oxidized Surface														
5 MPH	19/20	11.3	0.00011	3.7e-07	0.00043	1.4e-06	0.1155	3.8e-04	0.00074	2.4e-06	0.00038	1.2e-06	0.00215	7.0e-06
10 MPH	11/12	9.6	-a	-a	0.00133	5.1e-06	0.2143	8.2e-04	0.00172	6.6e-06	0.00165	6.3e-06	0.00147	5.6e-06
15 MPH	25/26	11.5	0.00007	2.2e-07	0.00216	6.9e-06	0.1495	4.8e-04	0.00062	2.0e-06	0.00246	7.8e-06	0.00263	8.4e-06
Average Emission Factor				-a		4.5e-06		5.6e-04		3.7e-06		5.1e-06		7.0e-06

[a] Cadmium was not detected in any of the particle sizing fractions and therefore the calculations could not be performed.

TABLE 7-12. SUMMARY OF EMISSION FACTORS FOR PM-2.5 METAL PARTICULATE

Operating condition	Test run	Net sand use rate (lb/min)	PM-2.5 cadmium emissions (kg/hr)	PM-2.5 cadmium emission factor (kg/kg)	PM-2.5 chromium emissions (kg/hr)	PM-2.5 chromium emission factor (kg/kg)	PM-2.5 iron emissions (kg/hr)	PM-2.5 iron emission factor (kg/kg)	PM-2.5 manganese emissions (kg/hr)	PM-2.5 manganese emission factor (kg/kg)	PM-2.5 nickel emissions (kg/hr)	PM-2.5 nickel emission factor (kg/kg)	PM-2.5 lead emissions (kg/hr)	PM-2.5 lead emission factor (kg/kg)
Clean Surface														
5 MPH	17/18	6.5	0.00025	1.4e-06	0.00026	1.5e-06	0.0202	1.1e-04	0.00003	1.5e-07	0.00019	1.1e-06	0.00020	1.1e-06
10 MPH	9/10	9.9	-a	-a	0.00088	3.3e-06	0.0549	2.0e-04	0.00007	2.4e-07	0.00043	1.6e-06	0.00032	1.2e-06
15 MPH	23/24	9.8	0.00021	8.0e-07	0.00143	5.4e-06	0.0493	1.8e-04	0.00002	7.0e-08	0.00081	3.0e-06	0.00103	3.9e-06
Average Emission Factor				-a		3.4e-06		1.7e-04		1.5e-07		1.9e-06		2.1e-06
Painted Surface														
5 MPH	15/16	11.5	0.00007	2.1e-07	0.00065	2.1e-06	0.0313	1.0e-04	0.00009	2.9e-07	0.00027	8.6e-07	0.00087	2.8e-06
10 MPH	7/8	10.3	-a	-a	0.00113	4.0e-06	0.0457	1.6e-04	0.00034	1.2e-06	0.00042	1.5e-06	0.00157	5.6e-06
15 MPH	21/22	9.7	0.00002	7.6e-08	0.00195	7.4e-06	0.0392	1.5e-04	0.00003	1.2e-07	0.00215	8.1e-06	0.00167	6.3e-06
Average Emission Factor				-a		4.5e-06		1.4e-04		5.4e-07		3.5e-06		4.9e-06
Oxidized Surface														
5 MPH	19/20	11.3	0.00010	3.1e-07	0.00010	3.2e-07	0.0416	1.4e-04	0.00013	4.2e-07	0.00013	4.2e-07	0.00139	4.5e-06
10 MPH	11/12	9.6	-a	-a	0.00079	3.0e-06	0.0494	1.9e-04	0.00006	2.4e-07	0.00089	3.4e-05	0.00129	4.9e-06
15 MPH	25/26	11.5	0.000001	3.1e-09	0.00117	3.7e-06	0.0687	2.2e-04	0.00003	8.6e-08	0.00127	4.0e-06	0.00206	6.6e-06
Average Emission Factor				-a		2.4e-06		1.8e-04		2.5e-07		2.6e-06		5.3e-06

[a] Cadmium was not detected in any of the particle sizing fractions and therefore the calculations could not be performed.

SECTION 8

REFERENCES

Andersen Samplers, Inc. (1980). Operating Manual for Andersen Samplers Inc., HCSS, Heavy Grain Loading Impactor Particle Sizing Stack Samplers. Atlanta, GA, January 1.

Farthing, W. E., and S. S. Dawes (1988). Application Guide for Source PM-10 Measurement with Constant Sampling Rate. EPA-600/3-88-005, U.S. Environmental Protection Agency, Research Triangle Park, NC.

Hansen, M. D., and J. S. Kinsey (1983). Characterization of Inhalable Particulate Matter Emissions from a Dry Process Cement Plant, Volumes I and II. EPA-600/X-85-332a and 332b, U.S. Environmental Protection Agency, Research Triangle Park, NC, February.

Johnson, J. W., et al. (1978). A Computer-Based Cascade Impactor Data Reduction System. EPA-600/7-78-042, U.S. Environmental Protection Agency, Research Triangle Park, NC, July.

Kinsey, J. S. (1991). Guidance Document for Selecting Antiskid Materials Applied to Ice- and Snow-Covered Roadways. EPA-450/3-90-007, U.S. Environmental Protection Agency, Research Triangle Park, NC, July.

U.S. Environmental Protection Agency (1990). Methods Manual for Compliance with the BIF Regulations: Burning Hazardous Waste in Boilers and Industrial Furnaces. EPA-530/SW-92-010, Cincinnati, OH, December 1990.

U.S. Environmental Protection Agency (1986). Test Methods for Evaluating Solid Waste. SW-846, Third Edition (or later edition), Washington, D.C., November.

APPENDIX A

DESCRIPTION OF SAMPLING AND ANALYSIS PROCEDURES

SECTION 4

SOURCE ACTIVITY MEASUREMENTS

To provide supporting data for the above tests, a number of ancillary measurements will also be made to characterize the blasting media and process. These measurements include the characterization of the abrasives used, the surfaces cleaned, and the blasting operation tested. Each is described in detail in the following sections.

4.1 CHARACTERIZATION OF ABRASIVES

As specified above, three different abrasives will be evaluated in the program: silica sand; steel shot; and Black Beauty®. Samples of each of these materials will be collected and analyzed for appropriate physical and chemical properties as outlined below.

4.1.1 Sample Collection and Splitting

Bulk samples of each abrasive type will be collected using the general procedures outlined in American Society for Testing and Materials (ASTM) Method D75. A single composite sample will be assembled from subsamples obtained from each lot of material

used. The composite sample will then be split using a riffle (Figure 4-1) to a size appropriate for further analysis according to the procedures outlined in ASTM Method C 702. The sample splits obtained in this manner will be analyzed for both moisture content and selected physical and chemical properties as described below.

4.1.2 Surface Moisture Content

After splitting, all abrasive samples are oven dried to determine surface moisture content prior to additional analyses. The procedure provided in Table 4-1 is used for this purpose.

4.1.3 Determination of Physical Characteristics

After drying, each sample will be split again using a riffle according to ASTM Method C 702. One split will be used to determine particle size distribution and chemical composition and the second split analyzed for durability (i.e., modified LA Abrasion Loss). Each analysis is discussed below.

4.1.3.1 Particle Size Analyses—

The particle size distribution (physical diameter) of each abrasive sample will be determined by a combination of dry mechanical sieving for the larger material and sonic sieving for subsilt size particles (i.e., percent < 200 mesh or 75 µm in physical diameter [µmP]). For mechanical sieving, the procedure provided in Table 4-2 is used to analyze the sample.

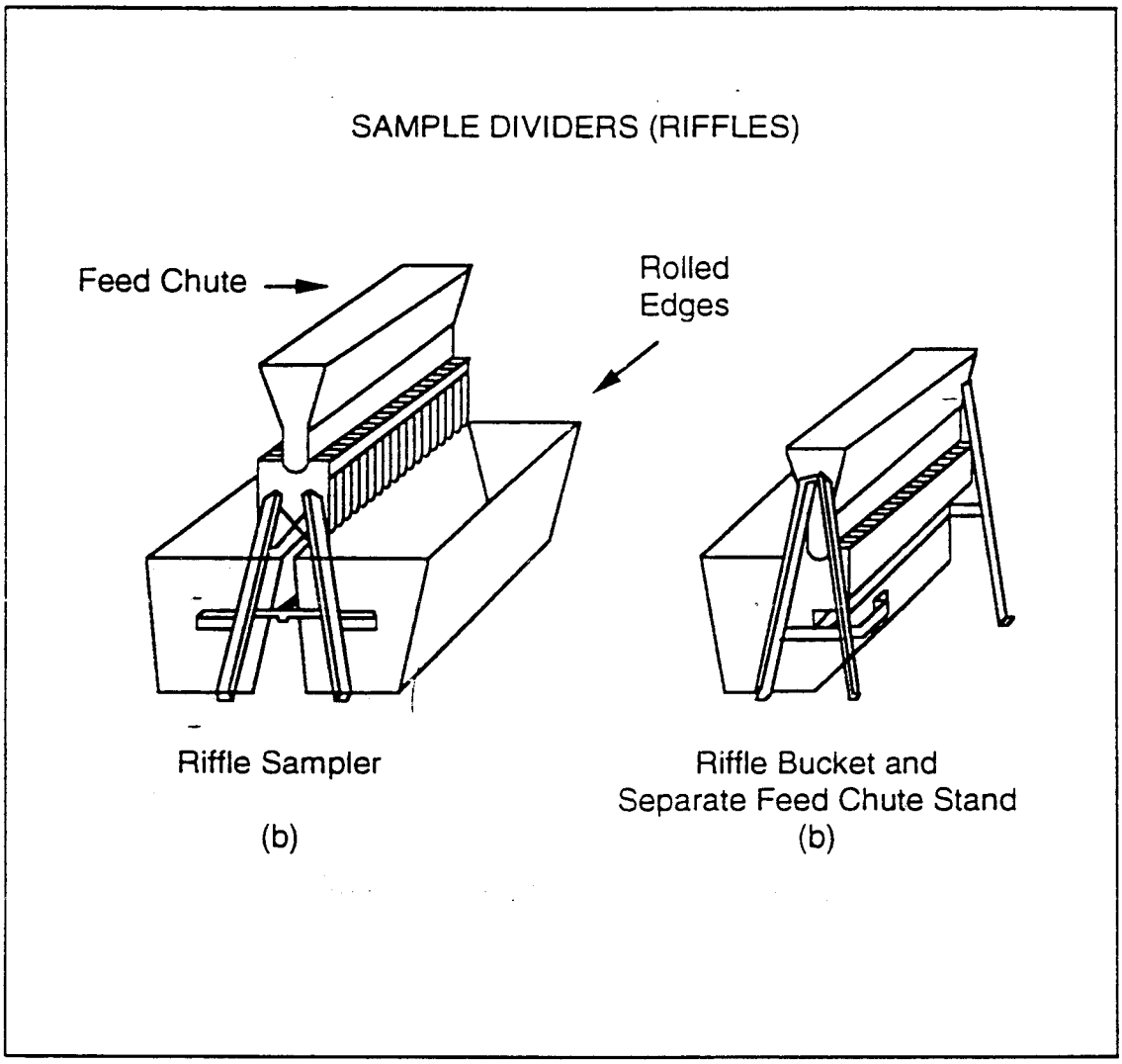

89-21 SEV grel schem 2 11/21/89

Figure 4-1. Sample riffle dividers.

TABLE 4-1. PROCEDURE FOR DETERMINING SURFACE MOISTURE CONTENT OF BULK AGGREGATE

1. Preheat the oven to approximately 110°C (230°F). Record oven temperature.

2. Record the make, capacity, and smallest division of the scale.

3. Weigh the empty laboratory sample containers which will be placed in the oven to determine their tare weight. Weigh containers with the lids on if they have lids. Record the tare weight(s). Check zero before each weighing.

4. Weigh the laboratory sample(s) in the container(s). For materials with high moisture content, ensure that any standing moisture is included in the laboratory sample container. Record the combined weight(s). Check zero before each weighing.

5. Place sample in oven and dry overnight. Materials composed of hydrated minerals or organic material like coal and certain soils should be dried for only 1-1/2 h.

6. Remove sample container from oven and (a) weigh immediately if uncovered, being careful of the hot container; or (b) place the tight-fitting lid on the container and let cool before weighing. Record the combined sample and container weight(s). Check zero reading on the balance before weighing.

7. Calculate the moisture as the initial weight of the sample and container minus the oven-dried weight of the sample and container divided by the initial weight of the sample alone. Record the value.

8. Calculate the sample weight to be used in additional analyses as the oven-dried weight of the sample and container minus the weight of the container. Record the value. (See Figure 4-2.)

MOISTURE ANALYSIS

Date: _____ Recorded by: _____

Sample No.: _____
Material: _____

Split Sample Balance:
Make _____
Capacity _____
Smallest Division _____

Total Sample Weight: _____
(Excl. Container)
Number of Splits: _____

Split Sample Weight (before drying)
Pan + Sample: _____
Pan: _____
Wet Sample: _____

Oven Temperature: _____
Date In _____ Date Out _____
Time In _____ Time Out _____
Drying Time _____

Sample Weight (after drying)
Pan + Sample: _____
Pan: _____
Dry Sample: _____

MOISTURE CONTENT
(A) Wet Sample Wt. _____
(B) Dry Sample Wt. _____
(C) Difference Wt. _____

$\frac{C \times 100}{A}$ = _____% Moisture

Figure 4-2. Example moisture analysis form.

TABLE 4-2. PROCEDURE FOR MECHANICAL SIEVING OF BULK AGGREGATE

1. Select the appropriate 20 cm (8-in) diameter, 5 cm (2-in) deep sieve sizes. Recommended U.S. Standard Series sizes are: 3/8 in, No. 4, No. 40, No. 100, No. 140, No. 200, and a pan. Comparable Tyler Series sizes can also be utilized. The No. 20 and the No. 200 are mandatory. The others can be varied if the recommended sieves are not available or if buildup on one particular sieve during sieving indicates that an intermediate sieve should be inserted.

2. Obtain a mechanical sieving device such as vibratory shaker or a Roto-Tap without the tapping function.

3. Clean the sieves with compressed air and/or a soft brush. Material lodged in the sieve openings or adhering to the sides of the sieve should be removed (if possible) without handling the screen roughly.

4. Obtain a scale (capacity of at least 1,600 g or 100 lb) and record make, capacity, smallest division, date of last calibration, and accuracy.

5. Weigh the sieves and pan to determine tare weights. Check the zero before every weighing. Record weights.

6. After nesting the sieves in decreasing order with pan at the bottom, transfer dried laboratory sample (preferably immediately after moisture analysis, as applicable) into the top sieve. The sample should weigh between ~ 400 and 1,600 g (0.9 to 3.5 lb). This amount will vary for finely textured materials; 100 to 300 g may be sufficient when 90% of the sample passes a No. 8 (2.36 mm) sieve. Brush fine material adhering to the sides of the container into the top sieve and cover the top sieve with a special lid normally purchased with the pan.

7. Place nested sieves into the mechanical sieving device and sieve for 10 min. Remove pan containing minus No. 200 and weigh. Repeat the sieving in 10-min intervals until the difference between two successive pan sample weighings (where the tare weight of the pan has been subtracted) is less than 3.0%. Do not sieve longer than 40 min.

8. Weigh each sieve and its contents and record the weight. Check the zero reading on the balance before every weighing.

9. Collect the pan sample and place the sample in a separate container if further analysis is expected.

10. Calculate the percent of mass less than the 200 mesh screen (75 µm physical diameter). This is the silt content. See Figure 4-3.

SILT ANALYSIS

Date: _____ Recorded by: _____

Sample No.: _____
Material: _____

Sample weight (after drying)
Pan + Sample: _____
Dry sample: _____
Final weight: _____

Split Sample Balance:
Make_____
Capacity_____
Smallest Division_____

$$\% \text{ silt} = \frac{\text{Net Weight} < 200 \text{ mesh}}{\text{Total Net Weight}} \times 100 = \_\_\_\_\_\%$$

SIEVING

Time: Start:	Weight (Pan Only)
Initial (tare):	
20 min:	
30 min:	
40 min:	

Screen	Tare weight (screen)	Final weight (screen + sample)	Net weight (sample)	%
3/8 in				
4 mesh				
10 mesh				
20 mesh				
40 mesh				
100 mesh				
140 mesh				
200 mesh				
Pan				

Figure 4-3. Example silt analysis form.

For the material passing the 200 mesh screen (i.e., silt or < 75 µmP) obtained by mechanical sieving, the distribution of particles in the smaller size fractions is determined by sonic classification using the procedure outlined in Table 4-3. A sample data form is shown in Figure 4-4.

4.1.3.2 Determination of Material Durability—

The durability of each abrasive will also be determined by analysis of applicable sample splits for modified LA Abrasion Loss. ASTM Method C 131 is used for this purpose as modified by MRI for application to fine aggregate materials (Kinsey, 1991). Modifications to the standard ASTM procedure are summarized in Table 4-4.

4.1.4 Determination of Chemical Characteristics

Selected subsamples obtained during mechanical and sonic sieving will also be analyzed for chemical composition. The separates to be analyzed (as possible) include the following specific size fractions: > 420 µmP (material retained on the 3/8 in, No. 4, and No. 40 sieves); 420-149 µmP (material retained on the No. 100 sieve); 149-75 µmP (material retained on the No. 140 and 200 sieve); 75-30 µmP; 30-10 µmP, and 10-5 µmP (if possible); and < 5 µmP or < 10 µmP (as appropriate).

The subsamples identified above will be analyzed for the 10 HAPs metals using Method 0012 as published in SW 846. Other metals of interest (e.g., Si for sand and Fe for steel shot) may also be determined, as deemed appropriate by MRI. These subsamples will be treated and analyzed in an identical manner to those obtained from the cascade impactor/cyclone system described below. Figure 4-5 illustrates the overall analytical scheme for the physical and elemental characterization of the abrasive samples.

TABLE 4-3. SONIC SIEVING PROCEDURE

1. Obtain a sonic sieving apparatus (ATM Model L3P or equivalent).

2. Select the appropriate sieves that are optionally available for use with the above apparatus. The sieves commonly utilized are the 53-µm, 20-µm, and 10-µm sieves. A 5-µm sieve may also be used depending on the sample analyzed.

3. Obtain an analytical balance with the smallest division being 0.01 mg.

4. The material to be sieved is the bottom pan (< 75 µm) catch from the mechanical silt analysis procedure (Figure 4-3).

5. Clean the sieves in a low wattage (< 800 W) ultrasonic bath, taking care to immerse the sieves edgewise only in the solvent. The use of Freon T.F. as a solvent is recommended because of its fast drying time. Once the sieves are clean, handle them only with cloth gloves to prevent contamination and static charge buildup. Latex gloves are not recommended.

6. Calibrate the balance with Class S weights prior to each weigh period, and periodically check the balance during its use. Tare weigh the sieves and the catch pan. Weigh each sieve and the catch pan three times, alternating sieves between each weighing, and record each weight.

7. After nesting the sieves in decreasing order of size, place the sample into the top sieve. The sample should weigh between 0.5 and 1.0 g. The sample weigh boat must be tare weighed prior to receiving the sample and again after the sample is introduced to the top sieve. The difference is subtracted from the sample weight and is recorded as material lost due to handling. Due to the hygroscopic nature of certain oven dried materials, the sample may gain moisture. Thus, the work must be done quickly without stopping for any length of time during the entire test cycle.

8. Once the material is placed on the top sieve, cover the top sieve with the sound wave generating diaphragm and place the sieves in the sonic shaker. The total sieving time is 5.0 min. With the sonic shaker in the sieve mode and the amplitude set on 2, sieve the material. Increase the amplitude to 5 after 1 min. After 1.5 min (elapsed time) switch the machine to the sift/pulse mode until the end of the test. If during the sift/pulse mode appreciable amounts of material collect on the sieve wall, carefully tap the sides where the particulate is adhering using a wooden rod.

9. After the 5-min sieving, remove the sieves and promptly weigh each sieve as rapidly as possible. Repeat the weighing two more times. Record each weight and do not interrupt this procedure.

10. Calculate the average tare and final weights of each sieve and pan. Subtract the tare from the final weight to find the average amount retained on each sieve and pan. Calculate both the mass and the percentage retained. Record these values on the data sheet (Figure 4-4).

MIDWEST RESEARCH INSTITUTE

Sonic Sieving

MRI Project No. _____ Date _____

Form No. _____ Recorded by _____

Test Material: _____ Dry Sample No. _____

Balance

Make _____

Capacity _____

Smallest Division _____

Screen	Tare (g)	Final (g)	Net Weight (g)	Average	%	Comments
___ µm						
___ µm						
___ µm						
Pan						
			Total Collected Sample			

(a) Weigh boat and dry sample _____ g

(b) Weigh boat tare _____ g

(c) Weigh boat after emptying _____ g

(d) Sample lost to weigh boat [c-b] _____ g

(e) Actual sample weight [a-c] _____ g

82-67 SEV lun trm 111992

Figure 4-4. Example sonic sieving form.

TABLE 4-4. MODIFICATIONS TO ASTM METHOD C 131-89
FOR AGGREGATE MATERIAL < 2.36 mm

The standard ASTM methodology should be used with the following modifications:

5. Apparatus

5.4.1 The weight of the test sample placed in the Testing Machine shall be 5,000 ± 10 g along with a charge of six (6) standard spheres.

8. Procedure

8.1 Split the sample into two equal fractions according to Method C 702. Sieve the first fraction according to the procedure outlined in Table A and record the results. Weigh the charge of spheres to be introduced into the testing machine and record the results.

8.2 Place the second sample fraction (as received) and the charge in the Los Angeles testing machine and rotate the machine at a speed of 30 to 33 rpm for 500 revolutions. After the prescribed number of revolutions, discharge the material from the machine, separate the charge, and sieve the sample material using the procedure shown in Table A. Record the results.

TABLE A. SAMPLE SIEVING PROCEDURE

1. Select the appropriate 8-in diameter, 2-in deep sieve sizes. Recommended U.S. Standard Series sizes are 3/8 in, No. 4, No. 20, No. 40, No. 100, No. 140, No. 200, and a pan. Comparable Tyler Series sizes can also be utilized. The No. 20 and the No. 200 are mandatory. The others can be varied if the recommended sieves are not available or if buildup on one particular sieve during sieving indicates that an intermediate sieve should be inserted.
2. Obtain a mechanical sieving device such as vibratory shaker or a Roto-Tap.
3. Clean the sieves with compressed air and/or a soft brush. Material lodged in the sieve openings or adhering to the sides of the sieve should be removed (if possible) without handling the screen roughly.
4. Obtain a scale (capacity of at least 1,600 g) and record make, capacity, smallest division, date of last calibration, and accuracy (if available).
5. Tare sieves and pan. Check the zero before every weighing. Record weights.
6. After nesting the sieves in decreasing order with pan at the bottom, dump dried laboratory sample (probably immediately after moisture analysis) into the top sieve. Brush fine material adhering to the sides of the container into the top sieve and cover the top sieve with a special lid normally purchased with the pan.
7. Place nested sieves into the mechanical device and sieve for 20 min. Remove the pan containing the minus No. 200 fraction and weigh. Replace pan beneath the sieves and sieve for another 10 min. Remove pan and weigh. When the differences between two successive pan sample weighings (where the tare of the pan has been subtracted) is less than 3.0%, the sieving is complete.
8. Weigh each sieve and its contents and record the weight. Check the zero before every weighing.
9. Collect the laboratory sample and place the sample in a separate container if further analysis is expected.

9. Calculation

9.1 Determine the abrasion loss as a percentage using the following equation:

$$aL = \frac{S_i - S_f}{S_i} \times 100$$

where:

aL	=	LA abrasion loss (weight percent)
S_i	=	Weight percent of material > 200 mesh (75 µm) in original sample
S_f	=	Weight percent of material > 200 mesh (75 µm) in sample after exposure in Los Angeles Testing Machine

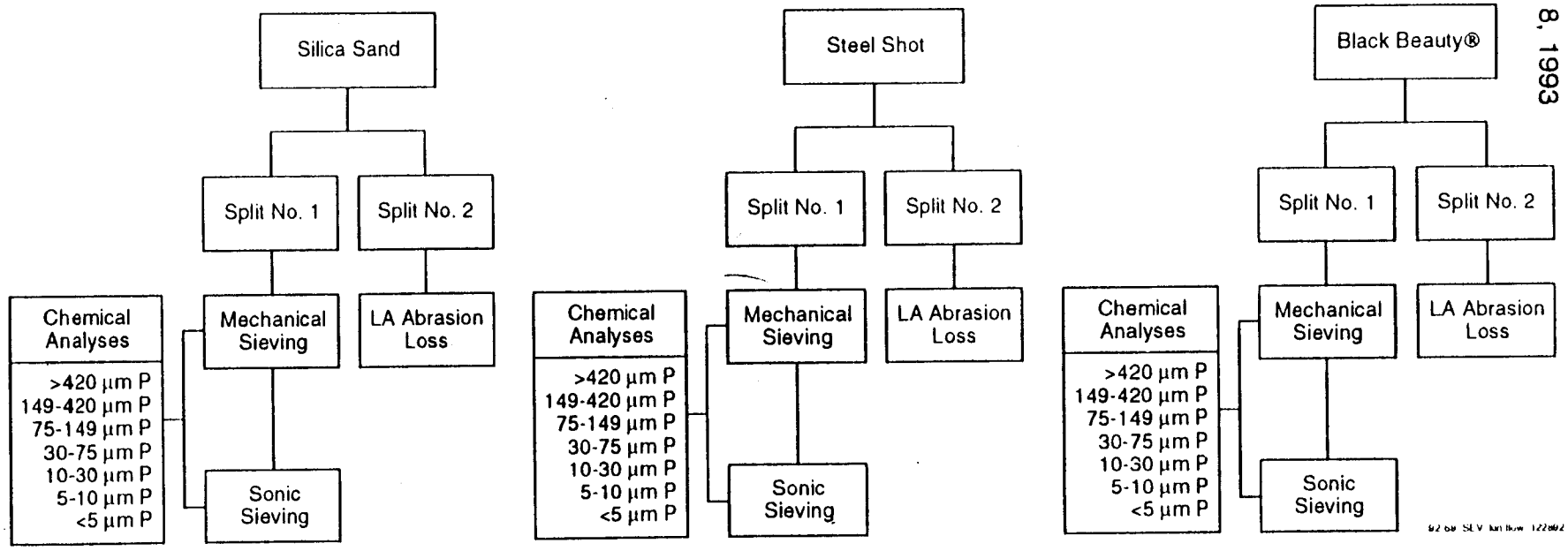

Figure 4-5. Analytical scheme for the physical and elemental characterization of composite abrasive samples.

4.2 SURFACE CHARACTERIZATION

Another ancillary measurement to be made during the experimental program is the chemical characterization of the surface being cleaned as well as any coatings or oxidized layers which may be present. This analysis will include both the determination of the elemental composition of the bulk material as well as the separate determination of the coating/oxidation layer being removed by the blast media.

To characterize the test surface prior to blasting, a representative sample(s) will be collected from the component being cleaned using a small hole saw. A polished section of this(ese) sample(s) will then be prepared using standard techniques and analyzed by a combination of Scanning Electron Microscopy (SEM) and Energy Dispersive X-ray (EDX) spectroscopy. This method is especially well suited to the elemental characterization of surfaces and surface layers such as that being discussed here.

Each prepared sample will be analyzed by MRI using a Philips Model 515 SEM equipped with an EDAX Model PV 9900 EDX system. The SEM/EDX system will be calibrated prior to each analysis using pure samples of copper and aluminum. Both the bulk material as well as any coating/oxidation layer will be evaluated separately to identify and quantitate their elemental composition. In addition, the depth of the coating/oxidation layer will also be determined using the magnification factor provided by the SEM. Photographs of each sample will also be taken to document the results of this determination.

4.3 SOURCE ACTIVITY DETERMINATION

The blasting operation will also be characterized as part of the experimental program. This effort will include the determination of both material flow rate through the blast nozzle (as a measure of source activity) as well as a mass balance of the total blasting process. Each determination is described below.

To quantify the material flow rate through the blast nozzle, the blast "pot" will be placed on a portable scale to measure the amount of material in the pot before and after each test run. Using the weight loss and the total operating time, an average material throughput rate can be obtained.

If weighing of the blast pot is found to be impractical, the empirical equation developed by the South Coast Air Quality Management District (California) may also be used which is expressed as follows (SCAQMD, 1988):

$$Q_a = Q_s \frac{(D_a)^2}{(D_s)^2} \frac{d_a}{d_s} \qquad (4\text{-}1)$$

where:

Q_a	=	mass flow rate of abrasive (lb/h) with nozzle diameter D_a (inches)
Q_s	=	mass flow rate of sand (lb/h) with nozzle diameter D_s (inches)
D_a	=	actual nozzle internal diameter (inches)
D_s	=	nozzle internal diameter (inches) from Table 4-5 for sand
d_a	=	density of abrasive (lb/ft^3)
d_s	=	density of sand (lb/ft^3) = 99 lb/ft^3

The above equation is used to estimate the flow rate for abrasives other than sand. Where sand is used, Table 4-5 provides the material flow rate through the system based on the applicable internal dimensions of the blast nozzle.

TABLE 4-5. FLOW RATE OF SAND THROUGH A BLASTING NOZZLE AS A FUNCTION OF NOZZLE PRESSURE AND INTERNAL DIAMETER[a]

Nozzle internal diameter (inches)	Sand flow rate through nozzle (lb/h)							
	Nozzle pressure (psig)							
	30	40	50	60	70	80	90	100
1/8	28	35	42	49	55	63	70	77
3/16	65	80	94	107	122	135	149	165
1/4	109	138	168	195	221	255	280	309
5/16	205	247	292	354	377	420	462	507
3/8	285	355	417	477	540	600	657	720
7/16	385	472	560	645	755	820	905	940
1/2	503	615	725	835	945	1050	1160	1265
5/8	820	990	1170	1336	1510	1680	1850	2030
3/4	1140	1420	1670	1915	2160	2400	2630	2880
1	2030	2460	2900	3340	3780	4200	4640	5060

[a] From SCAQMD, 1988.

A mass balance will also be performed for the blasting operation tested. This will be accomplished by collecting the spent abrasive from the wind tunnel using an industrial vacuum according to the procedure provided in Table 4-6.

TABLE 4-6. MASS BALANCE SAMPLE COLLECTION PROCEDURE

1. If large, loose material is present on the surface, it should be collected with a whisk broom and dustpan. Store the swept material in a clean, labeled container of suitable size (such as a metal or plastic 19 L [5 gal] bucket) with a sealable polyethylene liner. Increments of the same sample may be mixed within the container.

2. Vacuum sweep the collection area using a portable vacuum cleaner fitted with an empty tared (i.e., preweighed) filter bag. For heavy loadings more than one filter bag may be required for a single sample.

3. Carefully remove the bag from the vacuum sweeper and check for tears or leaks. If necessary, reduce samples from broom sweeping to a size amendable for analysis (see Section 6.1.1). Seal broom-swept material in a clean, labeled plastic jar for transport (alternatively, the swept material may be placed in the vacuum filter bag). Fold the unused portion of the filter bag, wrap a rubber band around the folded bag, and store the bag for transport.

4. Record the required information in the sampling logbook.

Using the flow rate through the nozzle, the amount of material collected from the wind tunnel, and the total particulate emission rate, the mass balance will be evaluated using the following expression:

$$\frac{Q_a\, t}{60} = W_{sa} + \frac{E_t\, t}{60} \qquad (4\text{-}2)$$

where:

Q_a = mass flow rate through the blast nozzle (lb/h or kg/h)

t = total operating time (min)

W_{sa} = weight of spent abrasive collected from wind tunnel (lb or kg)

E_t = total particulate emission rate (lb/h or kg/h)

Theoretically, the above equality should be satisfied (within appropriate experimental errors) to achieve a suitable closure for a mass balance for the overall blasting process.

SECTION 5

EMISSION SAMPLING AND ANALYTICAL PROCEDURES

The sampling and analytical methods to be used during the experimental program are detailed in this section. Either EPA Reference Test Methods or other accepted techniques will be used to determine: particulate emissions; emissions of HAP metals; particle size distribution (including PM-10); and HAP metals by particle size. Each of these techniques is described below.

5.1 PRELIMINARY PRETEST PROCEDURES

Following equipment setup, preliminary test data will be compiled to determine nozzle sizes and to calculate isokinetic sampling rates. Test location geometric measurements will be verified and sampling point distances recalculated as a QC check. A pitot traverse will then be performed to determine velocity profiles and the characteristics of the airstream flowing through the wind tunnel. The preliminary emission sampling parameters to be determined are as follows:

- Temperature (°C or °F)
- Pitot pressure differential (kP or inches water gage)
- Moisture (percent)
- Average gas velocity (mps or fps)
- Duct dimensions—diameter, width, and height (m or ft)

- Obstruction distance—upstream and downstream (m or ft)
- Sampling points—number and matrix

As part of the preliminary testing, sampling will be performed simultaneously for particulate and particle size distribution for the abrasive (sand) only (without a part being cleaned) case outlined in Table 3-1. Two runs will be conducted at each of three wind velocities during these preliminary tests to establish an experimental "background" without the influence of a cleaned surface. The sampling period for each run will be 30 min.

The results of the preliminary tests will also be used to evaluate sampling procedures and to determine a mass balance of the facility test operations. Acceptable sampling results and acceptable closure of the mass balance will need to be achieved before proceeding with the remainder of the testing. MRI will work closely with the EPA Work Assignment Manager concerning the results of the preliminary testing and any decision-making in adjusting/modifying test plan details for subsequent testing.

5.2 DETERMINATION OF PARTICULATE AND METALS

Sampling will be conducted simultaneously for particulate/metals as well as metals by particle size during the three runs for each test scenario shown previously in Table 3-1. The sampling and analytical procedures to be used are described below.

5.2.1 MM5 Sampling Train Description

The MM5 train used for particulates and metals is identical to a standard EPA Method 5 train (see Figure 5-1) with the addition of a glass probe tip. The sampling procedure will be as specified in the EPA multimetals method. As volatile metals are not

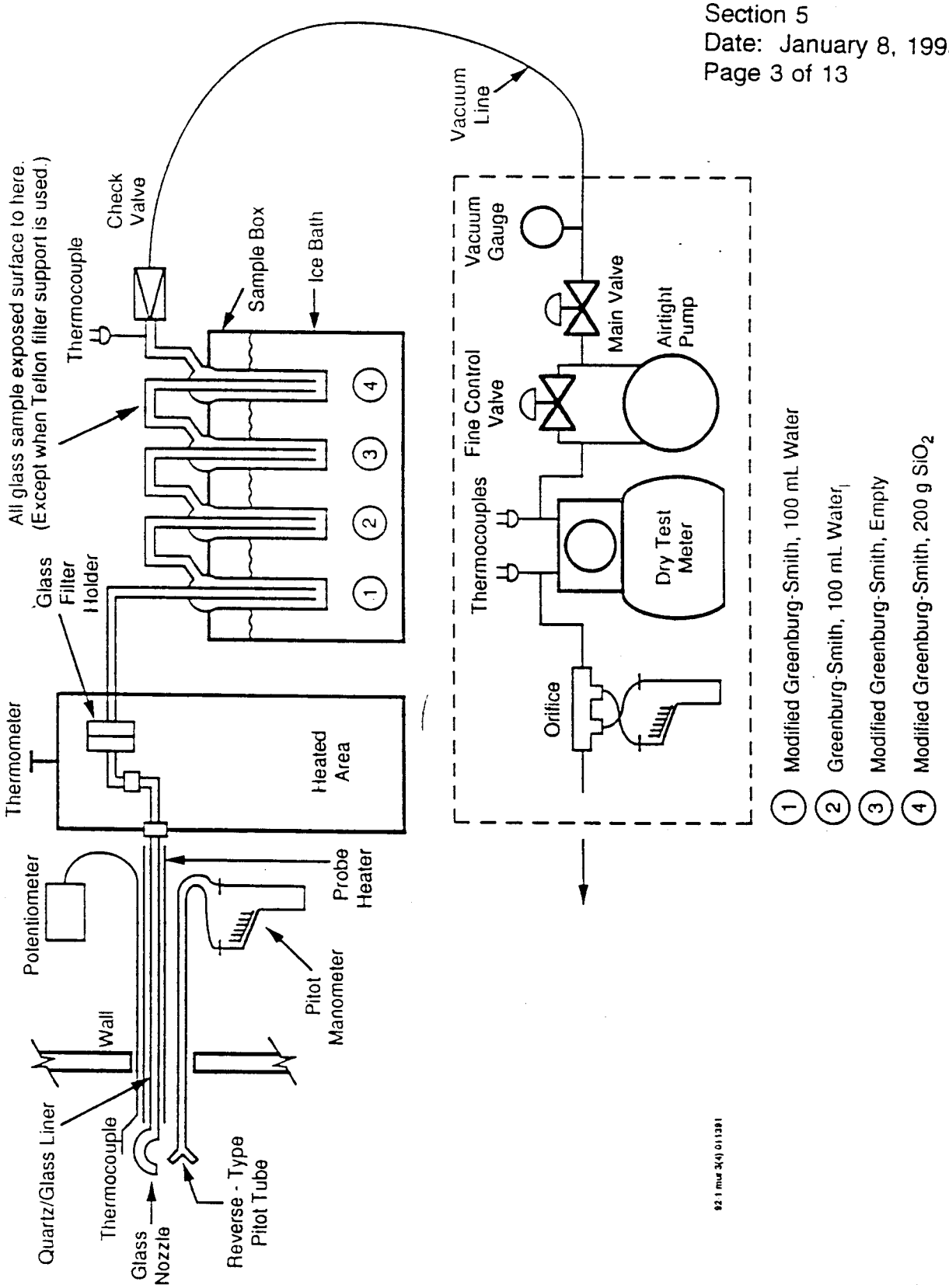

1. Modified Greenburg-Smith, 100 mL Water
2. Greenburg-Smith, 100 mL Water
3. Modified Greenburg-Smith, Empty
4. Modified Greenburg-Smith, 200 g SiO_2

Figure 5-1. Diagram of MM5 sampling train.

expected to be present in the samples collected, the acidified impinger solutions have been deleted from the sampling and analysis protocol.

The train components consist of a quartz nozzle, a borosilicate glass probe housed in a stainless steel sheath, a high efficiency quartz fiber filter on a Teflon-coated wire support mounted in a glass holder, four glass impingers, and a flow control module containing a leakless vacuum pump, a dry gas meter, an orifice meter and appropriate valves, gauges, and associated hardware to permit control and monitoring of the gas sampling rate. The four impingers are of the Greenburg-Smith design-modified as follows:

- The first impinger is a modified Greenburg-Smith impinger. The impinger is modified by removal of the nozzle/plate assembly, and the stem length is extended to within 1/2 in from the bottom of the impinger bottle.

- The second impinger is the standard Greenburg-Smith tip design.

- The third impinger is of the modified Greenburg-Smith tip design.

- The fourth impinger is of the modified Greenburg-Smith tip design.

The impingers will be charged as follows:

- Impinger one and two—100 mL of distilled-in-glass water
- Impinger three—empty
- Impinger four—approximately 200 g of blue indicating type silica gel

Because of the short run times expected for this test, a cyclone may not be used. The filter holder assembly is housed in a temperature controlled oven maintained at 120° ± 14°C.

5.2.1.1 MM5 Train Preparation—

Calibration—The MM5-PM equipment will be calibrated, checked for proper operation, and cleaned for use prior to arrival at MRI's Deramus Field Station. As a minimum, the following equipment will be calibrated using EPA methods:

1. Dry gas meter/orifice using calibrated critical orifices.
2. Wind tunnel temperature thermocouple.
3. Filter oven inlet thermocouple.
4. Thermocouple for dry gas meter temperature.
5. Probe nozzles.
6. Pitot tube as described.

Copies of all calibration data will be placed in the project calibration data file and will be submitted with the final report. The calibration procedures used by MRI are from the *Quality Assurance Handbook for Air Pollution Measurement Systems: Volume III—Stationary Source Specific Methods*, U.S. EPA 600/4-77-027b where applicable and from the latest procedures in EPA Method 5.

All surfaces in the sampling train that will come into contact with the sample gas stream will be thoroughly cleaned. The cleaning procedure is discussed in more detail later in this section. To minimize the potential for contamination of sampling train glassware, all glassware components will be sealed prior to being packed for storage and transport. All sample containers will be acid cleaned amber glass with Teflon-lined lids.

In order to ensure a leak-free fit, all MM5 sampling train joint fittings will be greaseless, using threaded glass and Teflon ferrules.

Filters—Weighed quartz filters will be used, but identification numbers will not be stamped on these filters. The filters will be placed in glass petri dishes which will be marked with identification numbers.

Glassware—All glassware will be cleaned using the procedures listed below:

1. Rinse with tap water.
2. Wash with soapy (Alconox) water.
3. Rinse three times with tap water.
4. Rinse three times with distilled water.
5. Soak in 10% HNO_3 for 4 h.
6. Rinse three times with distilled water.
7. Rinse three times with ASTM Type I water.
8. Air dry.
9. Cover all openings with Parafilm or Teflon tape.

5.2.1.2 Sample Collection—

Sample collection will follow EPA Method 5 procedures. A glass probe tip will be used as required for metals.

At the end of each test, after the final leak check, the sample train will be taken to the field laboratory to recover the sample, as follows:

- Container 1—Filter. Use Teflon-coated or nonmetallic tweezers to recover the filter. Place the filter in the labeled glass petri dish. Filter will be transferred to sample container after weighing.

- Container 2—Front-Half Rinse with Acetone. If all residual material cannot be removed, rinse and brush the probe nozzle, probe, and all glassware up to and including the front-half of the filter holder with acetone; repeat three times using a total of 150 mL.

- Container 3—Front-Half Rinse with Nitric Acid. Rinse and brush the probe nozzle, probe, and all glassware up to and including the front half of the filter holder with 0.1 N nitric acid; repeat three times.

- Weigh the impingers and dispose of their contents properly.

5.2.2 Total Particulate/Metals Sample Handling

The probe/front-half acetone wash and filter fractions for the MM5 sample train from all runs will be analyzed gravimetrically for total particulates per EPA Method 5. The probe/front-half acetone and nitric acid washes and filter fractions for the MM5 sample trains from all tests will be submitted for metal analysis. Field reagent blanks will be submitted, combined, and analyzed in the same manner as the train samples. Figure 5-2 presents a schematic for the metals analyses from the MM5 train.

5.2.3 Particulate Matter and Metals Analysis

The particulate analysis will be performed by MRI according to the procedures established in EPA Reference Method 5 (40 *CFR* 60, Appendix A). Gravimetric analysis of the filter will be done by desiccating the filter after which the filter will be weighed to a constant weight. (Constant weight means a difference of no more than 0.5 mg or 1% of total weight less tare weight, whichever is greater, between two consecutive weighings,

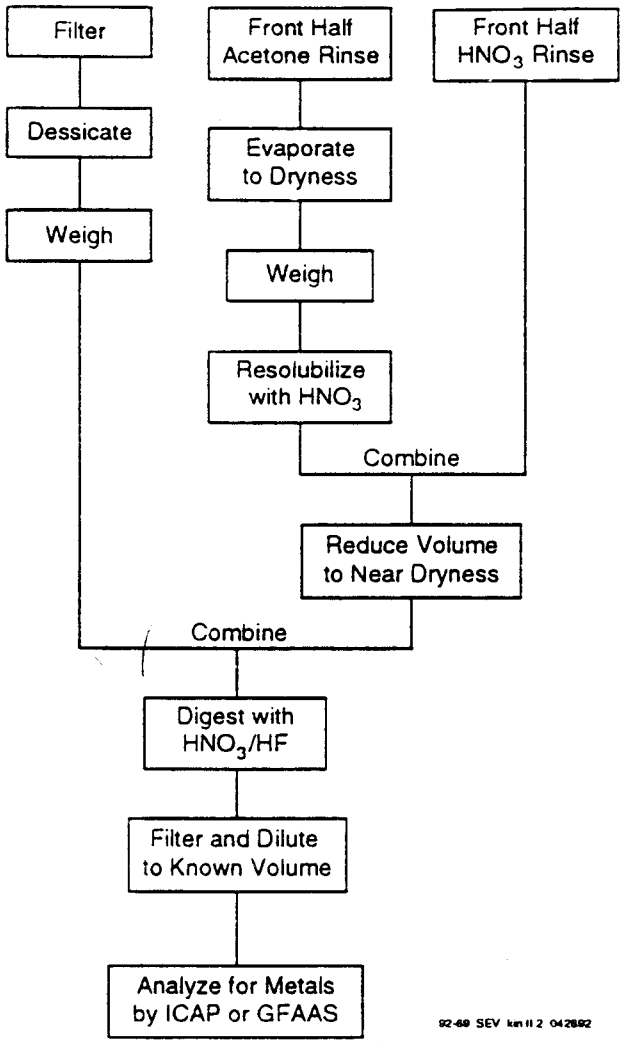

Figure 5-2. Analytical scheme for metals collected in MM5 sampling train.

with no less than 6 h of desiccation time between weighings.) The balance for the gravimetric analysis will be calibrated using Class S weights as described in detail in Section 7.5.1.

The probe rinse containers will be checked for any leakage during transport. The liquid is measured volumetrically to the nearest ±1 mL. The rinses will be transferred to acid cleaned, tared glass beakers. Evaporation will be conducted at ambient temperature and pressure. The beakers will be weighed to a constant weight with results reported to the nearest 0.1 mg. Weights will be reported separately for filters and probe rinses.

Samples from the MM5 sampling train will be analyzed for the 10 HAP metals described earlier plus other elements of interest for the particular test series conducted (e.g., Fe for a mild steel surface). The metals analysis procedures for the emission samples are summarized in the previous Figure 5-2 and will be performed in accordance with the detailed procedures contained in the EPA multiple metals method ("Methodology for the Determination of Metals Emissions in Exhaust Gases From Stationary Source Combustion Processes," December 1990 and in "Test Methods for Evaluating Solid Waste," SW-846, Third Edition, 1986).

5.3 DETERMINATION OF PARTICLE SIZE DISTRIBUTION AND SIZE-SPECIFIC METALS

5.3.1 MM5-PSD Sampling Train Description

The MM5-PSD sampling train used for the determination of particle size distribution, PM-10, and size-specific metals is identical to that described previously for the MM5 train with the addition of an inertial particle sizing device to the probe inlet. The general sampling procedure will be as specified in EPA Method 201A (Determination of PM-10 Emissions, Constant Sampling Rate Procedure) as published in 40 *CFR* Part 51,

Appendix M except that a multistage inertial sizing device will be used. Additional guidance on implementation of the method for particle sizes other than PM-10 will be as published by McCain et al. (1986) and Farthing and Dawes (1988).

Particle size distribution (PSD) data and metals by particle size will be determined by the use of an Anderson High Capacity Stack Sampler (HCSS) or equivalent.* The Anderson HCSS is a four-stage inertial sizing instrument which separates the particles into four size fractions (nominally > 10, 5 to 10, 1 to 5, and < 1 μm). The device consists of 2 impactor stages followed by a cyclone and back-up filter (Figure 5-3). Samples will be extracted through a glass nozzle.

5.3.1.1 MM5-PSD Train Preparation—

The preparation and weighing of the backup filters will be as specified previously for the MM5 train with additional preparation of the HCSS. The internal surfaces of the HCSS will be thoroughly cleaned before each use by scrubbing and brushing with hot soapy water, rinsing with hot tap water, rinsing with deionized distilled water, rinsing with acetone, and finally drying in a heated oven. Samples will be recovered by rinsing the surfaces with acetone. Brushing will not be done because of the potential for added contamination.

5.3.1.2 Sample Collection and Recovery—

The general sample collection and recovery procedure for the MM5-PSD sampling train will be identical to that specified for the MM5 train with the addition of sample recovery from the HCSS. A blank train will also be used to assess potential metals contamination from the collection surfaces. The sample recovery procedure for the HCSS

---

* Due to potential contamination of the size classified samples by the metallic collection substrate in the HCSS, a nonmetallic sizing instrument is preferable for this application. MRI is currently developing such a device which will be substituted for the HCSS if available at the time of sample collection.

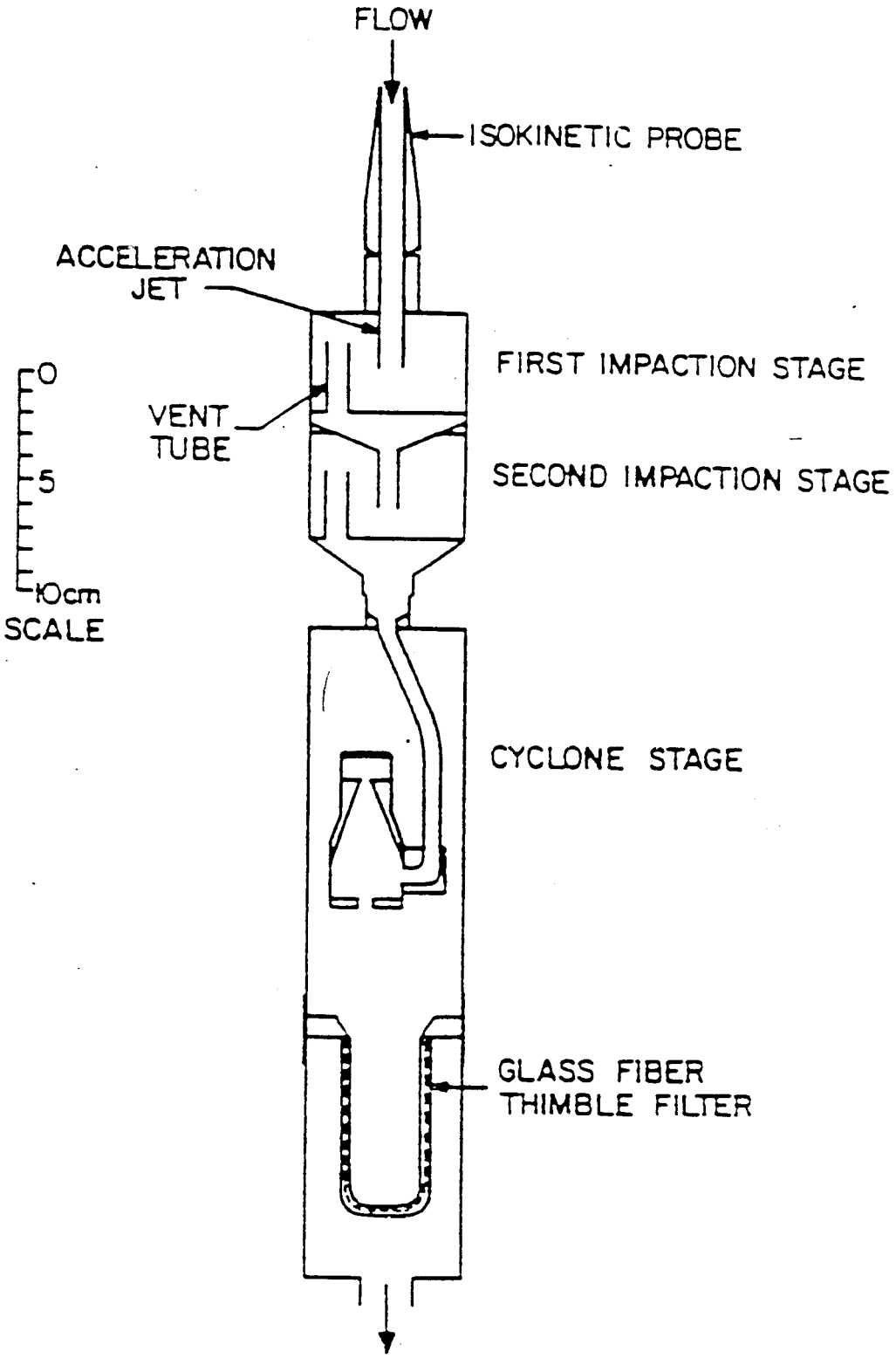

Figure 5-3. Schematic of Andersen HCSS.

will be in accordance with the "Operating Manual for Andersen Samplers, Inc., HCSS, Heavy Grain Loading Impactor, Particle Sizing Stack Samplers," January 1, 1980, except that a volatile organic solvent (i.e., acetone) will be used as the sample transfer medium.

The sample separates collected in the two impactor stages and cyclone will be quantitatively transferred to acid cleaned glass bottles by rinsing the internal surfaces with reagent grade acetone. The back-up filter will be removed from the sampler using Teflon-coated or nonmetallic tweezers and transferred to an appropriately sized acid-washed, wide mouth glass bottle.

5.3.2 Sample Handling

The sampling handling procedure used will be identical to that specified above for the MM5 sampling train. The acetone rinses from the HCSS stages will be treated in the same manner as the probe/front-half wash with respect to both gravimetric analysis and metals determination.

5.3.3 Gravimetric and Metals Analysis

The HCSS will be used to determine the aerodynamic particle size distribution by gravimetric analysis of the particulate matter collected on each of the four stages according to the general procedures established in EPA Method 5. For all test runs, each of the samples from the four stages will be analyzed separately for metals according to the same methods described in Section 5.2 above.

5.4 OXYGEN AND CARBON DIOXIDE SAMPLING

Because ambient air will be used, there will be no need for sampling and analysis for oxygen and carbon dioxide to determine the molecular weight of the sampled gas. The molecular weight of air will be assumed for all tests conducted.

APPENDIX B

LIST OF SAMPLES TAKEN FOR ANALYSIS

Table 1

List of Samples for Metals Analysis

1A. Particulate/Metals (PM/MM) and HCSS Sample Trains

	Run 7	Run 8	Run 9	Run 10	Run 11
PM/MM Acetone	7001	8001	9001	10001	11001
PM/MM Nitric Rinse	7002	8002	9002	10002	11002
PM/MM Filter	7003	8003	9003	10003	11003
HCSS 1st Stage/Rinse	7004	8004	9004	10004	11004
HCSS 2nd Stage/Rinse	7005	8005	9005	10005	11005
HCSS 3rd Stage/Rinse	7006	8006	9006	10006	11006
HCSS Thimble	7007	8007	9007	10007	11007
HCSS Filter/Rinse	7008	8008	9008	10008	11008
HCSS Probe Rinse	7009	8009	9009	10009	11009

	Run 12	Run 13	Run 14	Run 15	Run 16
PM/MM Acetone	12001	13001	14001	15001	16001
PM/MM Nitric Rinse	12002	13002	14002	15002	16002
PM/MM Filter	12003	13003	14003	15003	16003
HCSS 1st Stage/Rinse	12004	13004	14004	15004	16004
HCSS 2nd Stage/Rinse	12005	13005	14005	15005	16005
HCSS 3rd Stage/Rinse	12006	13006	14006	15006	16006
HCSS Thimble	12007	13007	14007	15007	16007
HCSS Filter/Rinse	12008	13008	14008	15008	16008
HCSS Probe/Rinse	12009	13009	14009	15009	16009

	Run 17	Run 18	Run 19	Run 20	Run 21
PM/MM Acetone	17001	18001	19001	20001	21001
PM/MM Nitric Rinse	17002	18002	19002	20002	21002
PM/MM Filter	17003	18003	19003	20003	21003
HCSS 1st Stage/Rinse	17004	18004	19004	20004	21004
HCSS 2nd Stage/Rinse	17005	18005	19005	20005	21005
HCSS 3rd Stage/Rinse	17006	18006	19006	20006	21006
HCSS Thimble	17007	18007	19007	20007	21007
HCSS Filter/Rinse	17008	18008	19008	20008	21008
HCSS Probe/Rinse	17009	18009	19009	20009	21009

Table 1 (Concluded)

	Run 22	Run 23	Run 24	Run 25	Run 26
PM/Metals Acetone Rinse	22001	23001	24001	25001	26001
PM/Metals Nitric Rinse	22002	23002	24002	25002	26002
PM/Metals Filter	22003	23003	24003	25003	26003
HCSS 1st Stage/Rinse	22004	23004	24004	25004	26004
HCSS 2nd Stage/Rinse	22005	23005	24005	25005	26005
HCSS 3rd Stage/Rinse	22006	23006	24006	25006	26006
HCSS Thimble	22007	23007	24007	25007	26007
HCSS Filter/Rinse	22008	23008	24008	25008	26008
HCSS Probe Rinse	22009	23009	24009	25009	26009
QA Samples					
Acetone Blank	1008				
Nitric Blank	1009				
HCSS Thimble Blank	1010				
HSCS Filter Blank	1011				
PM/Metals Condensate	1019				
HCSS Condensate	1020				

Table 2

List of Samples for Particulate Analysis by MRI

2A. Preliminary Tests

	Run 1	Run 2	Run 3	Run 4	Run 5	Run 6
PM Acetone Rinse	1001	2001	3001	4001	5001	6001
PM Filter	1002	2002	3002	4002	5002	6002
HCSS 1st Stage/Rinse	1003	2003	3003	4003	5003	6003
HCSS 2nd Stage/Rinse	1004	2004	3004	4004	5004	6004
HCSS 3rd Stage/Rinse	1005	2005	3005	4005	5005	6005
HCSS Filter	1006	2006	3006	4006	5006	6006
Acetone Blank	1008					
Nitric Blank	1009					
Thimble Blank	1010					
Filter Blank	1011					

Table 2

List of Samples for Particulate Analysis by MRI

2B. Emission Factor Tests for Particulate/Metals (PM/MM) and HCSS Sample Trains

	Run 7	Run 8	Run 9	Run 10	Run 11
PM/MM Acetone	7001	8001	9001	10001	11001
PM/MM Nitric Rinse	7002	8002	9002	10002	11002
PM/MM Filter	7003	8003	9003	10003	11003
HCSS 1st Stage/Rinse	7004	8004	9004	10004	11004
HCSS 2nd Stage/Rinse	7005	8005	9005	10005	11005
HCSS 3rd Stage/Rinse	7006	8006	9006	10006	11006
HCSS Thimble	7007	8007	9007	10007	11007
HCSS Filter/Rinse	7008	8008	9008	10008	11008
HCSS Probe/Rinse	7009	8009	9009	10009	11009

	Run 12	Run 13	Run 14	Run 15	Run 16
PM/MM Acetone	12001	13001	14001	15001	16001
PM/MM Nitric Rinse	12002	13002	14002	15002	16002
PM/MM Filter	12003	13003	14003	15003	16003
HCSS 1st Stage/Rinse	12004	13004	14004	15004	16004
HCSS 2nd Stage/Rinse	12005	13005	14005	15005	16005
HCSS 3rd Stage/Rinse	12006	13006	14006	15006	16006
HCSS Thimble	12007	13007	14007	15007	16007
HCSS Filter/Rinse	12008	13008	14008	15008	16008
HCSS Probe/Rinse	12009	13009	14009	15009	16009

	Run 17	Run 18	Run 19	Run 20	Run 21
PM/MM Acetone	17001	18001	19001	20001	21001
PM/MM Nitric Rinse	17002	18002	19002	20002	21002
PM/MM Filter	17003	18003	19003	20003	21003
HCSS 1st Stage/Rinse	17004	18004	19004	20004	21004
HCSS 2nd Stage/Rinse	17005	18005	19005	20005	21005
HCSS 3rd Stage/Rinse	17006	18006	19006	20006	21006
HCSS Thimble	17007	18007	19007	20007	21007
HCSS Filter/Rinse	17008	18008	19008	20008	21008
HCSS Probe/Rinse	17009	18009	19009	20009	21009

Table 2 (Concluded)

	Run 22	Run 23	Run 24	Run 25	Run 26
PM/Metals Acetone Rinse	22001	23001	24001	25001	26001
PM/Metals Nitric Rinse	22002	23002	24002	25002	26002
PM/Metals Filter	22003	23003	24003	25003	26003
HCSS 1st Stage/Rinse	22004	23004	24004	25004	26004
HCSS 2nd Stage/Rinse	22005	23005	24005	25005	26005
HCSS 3rd Stage/Rinse	22006	23006	24006	25006	26006
HCSS Thimble	22007	23007	24007	25007	26007
HCSS Filter/Rinse	22008	23008	24008	25008	26008
HCSS Probe/Rinse	22009	23009	24009	25009	26009

Table 3

Coor's Labs Sample and Analysis Required

3A. Samples to be Analyzed for Metals and Other Major Constituents

Sand Sieve > 420 μm	1012
Sand Sieve 149-420 μm	1013
Sand Sieve 75-149 μm	1014
Sand Sieve 30-75 μm	1015
Sand Sieve 10-30 μm	1016
Sand Sieve 50-10 μm	1017
Sand Sieve < 5 μm	1018

APPENDIX C

FIELD SAMPLING DATA

CONTENTS

Section		Page
1	Modified Method 5 Calcuiations	C-5
2	HCSS Calculations	C-85
3	HCSS Particulate Distribution Report	C-165

SECTION 1

MODIFIED METHOD 5 CALCULATIONS

FILE NAME - PREPART1
RUN # - PRELIMINARY PARTICULATE RUN 1
LOCATION - DERAMUS FIELD STATION
DATE - 3/23/93
PROJECT # - 9712M-51-16

PROG.=VER 06/09/89
04-28-1993 15:31:49

Initial Meter Volume (Cubic Feet)=	192.235
Final Meter Volume (Cubic Feet)=	224.762
Meter Factor=	1.023
Final Leak Rate (cu ft/min)=	0.000
Net Meter Volume (Cubic Feet)=	33.275
Gas Volume (Dry Standard Cubic Feet)=	32.049
Barometric Pressure (in Hg)=	29.12
Static Pressure (Inches H20)=	-0.50
Percent Oxygen=	20.5
Percent Carbon Dioxide=	0.0
Moisture Collected (ml)=	6.2
Percent Water=	0.9
Average Meter Temperature (F)=	75
Average Delta H (in H20)=	0.93
Average Delta P (in H20)=	0.254
Average Stack Temperature (F)=	43
Dry Molecular Weight=	28.82
Wet Molecular Weight=	28.72
Average Square Root of Delta P (in H20)=	0.4979
% Isokinetic=	100.3
Pitot Coefficient=	0.84
Sampling Time (Minutes)=	62.5
Nozzle Diameter (Inches)=	0.236
Stack Axis #1 (Inches)=	96.0
Stack Axis #2 (Inches)=	96.0
Rectangular Stack	
Stack Area (Square Feet)=	64.00
Stack Velocity (Actual, Feet/min)=	1,665
Flow Rate (Actual, Cubic ft/min)=	106,557
Flow rate (Standard, Wet, Cubic ft/min)=	108,682
Flow Rate (Standard, Dry, Cubic ft/min)=	107,701

Particulate Loading - Front Half

Particulate Weight (g)=	0.5223	Corr. to 7% O2 & 12% CO2
Particulate Loading, Dry Std. (gr/scf)=	0.2510	7.0273 25.0973
Particulate Loading, Actual (gr/cu ft)=	0.2536	
Emission Rate (lb/hr)=	231.65	

No Back Half Analysis

* * METRIC UNITS * *

FILE NAME - PREPART1 PROG.=VER 06/09/89
RUN # - PRELIMINARY PARTICULATE RUN 1 04-28-1993 15:31:50
LOCATION - DERAMUS FIELD STATION
DATE - 3/23/93
PROJECT # - 9712M-51-16

Initial Meter Volume (Cubic Meters)=	5.443
Final Meter Volume (Cubic Meters)=	6.364
Meter Factor=	1.023
Final Leak Rate (cu m/min)=	0.0000
Net Meter Volume (Cubic Meters)=	0.942
Gas Volume (Dry Standard Cubic Meters)=	0.908
Barometric Pressure (mm Hg)=	740
Static Pressure (mm H20)=	-13
Percent Oxygen=	20.5
Percent Carbon Dioxide=	0.0
Moisture Collected (ml)=	6.2
Percent Water=	0.9
Average Meter Temperature (C)=	24
Average Delta H (mm H20)=	23.7
Average Delta P (mm H20)=	6.4
Average Stack Temperature (C)=	6
Dry Molecular Weight=	28.82
Wet Molecular Weight=	28.72
Average Square Root of Delta P (mm H20)=	2.5095
% Isokinetic=	100.3
Pitot Coefficient=	0.84
Sampling Time (Minutes)=	62.5
Nozzle Diameter (mm)=	5.99
Stack Axis #1 (Meters)=	2.438
Stack Axis #2 (Meters)=	2.438
Rectangular Stack	
Stack Area (Square Meters)=	5.946
Stack Velocity (Actual, m/min)=	507
Flow rate (Actual, Cubic m/min)=	3,017
Flow rate (Standard, Wet, Cubic m/min)=	3,078
Flow rate (Standard, Dry, Cubic m/min)=	3,050

Particulate Loading - Front Half

Particulate Weight (g)=	0.5223	Corr. to 7% O2 & 12% CO2
Particulate Loading, Dry Std. (mg/cu m)=	575.5	16115.1 57554.0
Particulate Loading, Actual (mg/cu m)=	581.5	
Emission Rate (kg/hr)=	105.17	

No Back Half Analysis

FILE NAME - PREPART1
RUN # - PRELIMINARY PARTICULATE RUN 1
LOCATION - DERAMUS FIELD STATION
DATE - 3/23/93
PROJECT # - 9712M-51-16

PROG.=VER 06/09/89
04-28-1993 15:31:50

Point #	Delta P (in. H20)	Delta H (in. H20)	Stack T (F)	Meter T In(F)	Meter T Out(F)
1	0.420	2.77	41	74	74
2	0.300	1.00	43	72	72
3	0.350	0.90	42	71	71
4	0.340	1.00	42	71	71
5	0.230	0.84	42	73	71
6	0.160	0.58	43	73	72
7	0.210	0.65	43	73	71
8	0.260	0.90	43	73	72
9	0.290	0.90	43	74	72
10	0.160	0.58	43	76	73
11	0.200	0.73	43	75	74
12	0.170	0.62	44	75	74
13	0.170	0.62	44	75	74
14	0.170	0.62	43	76	74
15	0.120	0.44	43	77	74
16	0.250	0.90	44	76	75
17	0.270	0.98	44	77	75
18	0.260	0.95	43	77	75
19	0.230	0.85	44	78	75
20	0.200	0.73	44	79	75
21	0.280	1.00	44	76	76
22	0.320	1.15	43	77	75
23	0.370	1.35	43	78	75
24	0.350	1.28	43	79	75
25	0.260	1.00	46	82	77

Fraction	Final Wt. (g)	Tare Wt. (g)	Blank Wt. (g)	Net Wt. (g)
DRY CATCH	0.0000	0.0000	0.0000	0.0000
FILTER	1.5661	1.0466	0.0000	0.5195

Fraction	Final Wt. (g)	Tare Wt. (g)	Vol. (ml)	Net Wt. (g)
PROBE RINSE	161.9250	161.9222	0.0	0.0028
IMPINGERS	0.0000	0.0000	0.0	0.0000

Probe Rinse Blank (mg/ml)= 0.0000
Impinger Blank (mg/ml)= 0.0000

FILE NAME - PREPART2
RUN # - PRELIMINARY PARTICULATE RUN 2
LOCATION - DERAMUS FIELD STATION
DATE - 3/23/93
PROJECT # - 9712M-51-16

PROG.=VER 06/09/89
04-30-1993 10:27:07

Initial Meter Volume (Cubic Feet)=	80.550	
Final Meter Volume (Cubic Feet)=	112.850	
Meter Factor=	1.017	
Final Leak Rate (cu ft/min)=	0.010	
Net Meter Volume (Cubic Feet)=	32.849	
Gas Volume (Dry Standard Cubic Feet)=	31.610	
Barometric Pressure (in Hg)=	29.12	
Static Pressure (Inches H20)=	-0.50	
Percent Oxygen=	20.5	
Percent Carbon Dioxide=	0.0	
Moisture Collected (ml)=	39.5	
Percent Water=	1.0	**Saturated Stack**
Average Meter Temperature (F)=	75	
Average Delta H (in H20)=	0.92	
Average Delta P (in H20)=	0.248	
Average Stack Temperature (F)=	44	
Dry Molecular Weight=	28.82	
Wet Molecular Weight=	28.71	
Average Square Root of Delta P (in H20)=	0.4937	
% Isokinetic=	100.0	
Pitot Coefficient=	0.84	
Sampling Time (Minutes)=	62.5	
Nozzle Diameter (Inches)=	0.236	
Stack Axis #1 (Inches)=	96.0	
Stack Axis #2 (Inches)=	96.0	
Rectangular Stack		
Stack Area (Square Feet)=	64.00	
Stack Velocity (Actual, Feet/min)=	1,653	
Flow Rate (Actual, Cubic ft/min)=	105,775	
Flow rate (Standard, Wet, Cubic ft/min)=	107,662	
Flow Rate (Standard, Dry, Cubic ft/min)=	106,584	

Particulate Loading - Front Half

Particulate Weight (g)=	1.0887	Corr. to 7% O2 & 12% CO2
Particulate Loading, Dry Std. (gr/scf)=	0.5304	14.8514 53.0407
Particulate Loading, Actual (gr/cu ft)=	0.5342	
Emission Rate (lb/hr)=	484.49	

No Back Half Analysis

* * METRIC UNITS * *

FILE NAME - PREPART2
RUN # - PRELIMINARY PARTICULATE RUN 2
LOCATION - DERAMUS FIELD STATION
DATE - 3/23/93
PROJECT # - 9712M-51-16

PROG.=VER 06/09/89
04-30-1993 10:27:07

Initial Meter Volume (Cubic Meters)=	2.281	
Final Meter Volume (Cubic Meters)=	3.195	
Meter Factor=	1.017	
Final Leak Rate (cu m/min)=	0.0003	
Net Meter Volume (Cubic Meters)=	0.930	
Gas Volume (Dry Standard Cubic Meters)=	0.895	
Barometric Pressure (mm Hg)=	740	
Static Pressure (mm H20)=	-13	
Percent Oxygen=	20.5	
Percent Carbon Dioxide=	0.0	
Moisture Collected (ml)=	39.5	
Percent Water=	1.0	**Saturated Stack**
Average Meter Temperature (C)=	24	
Average Delta H (mm H20)=	23.4	
Average Delta P (mm H20)=	6.3	
Average Stack Temperature (C)=	7	
Dry Molecular Weight=	28.82	
Wet Molecular Weight=	28.71	
Average Square Root of Delta P (mm H20)=	2.4880	
% Isokinetic=	100.0	
Pitot Coefficient=	0.84	
Sampling Time (Minutes)=	62.5	
Nozzle Diameter (mm)=	5.99	
Stack Axis #1 (Meters)=	2.438	
Stack Axis #2 (Meters)=	2.438	
Rectangular Stack		
Stack Area (Square Meters)=	5.946	
Stack Velocity (Actual, m/min)=	504	
Flow rate (Actual, Cubic m/min)=	2,995	
Flow rate (Standard, Wet, Cubic m/min)=	3,049	
Flow rate (Standard, Dry, Cubic m/min)=	3,018	

Particulate Loading - Front Half

Particulate Weight (g)=	1.0887	Corr. to 7% O2 & 12% CO2
Particulate Loading, Dry Std. (mg/cu m)=	1216.3	34057.7 121634.5
Particulate Loading, Actual (mg/cu m)=	1225.2	
Emission Rate (kg/hr)=	219.96	

No Back Half Analysis

FILE NAME - PREPART2
RUN # - PRELIMINARY PARTICULATE RUN 2
LOCATION - DERAMUS FIELD STATION
DATE - 3/23/93
PROJECT # - 9712M-51-16

PROG.=VER 06/09/89
04-30-1993 10:27:08

Point #	Delta P (in. H20)	Delta H (in. H20)	Stack T (F)	Meter T In(F)	Meter T Out(F)
1	0.220	1.50	43	73	72
2	0.230	0.81	42	73	73
3	0.230	0.80	43	73	73
4	0.210	0.68	43	73	73
5	0.180	0.55	43	73	73
6	0.310	1.00	45	74	73
7	0.340	1.20	44	74	73
8	0.370	1.35	44	74	73
9	0.340	1.25	44	75	73
10	0.240	0.88	45	76	73
11	0.290	1.10	45	76	75
12	0.230	0.87	44	76	75
13	0.390	1.50	44	77	75
14	0.350	1.30	44	77	75
15	0.210	0.77	44	79	75
16	0.260	0.96	45	77	75
17	0.210	0.77	45	77	75
18	0.280	1.00	45	78	75
19	0.240	0.88	45	78	75
20	0.170	0.60	45	79	75
21	0.190	0.70	45	77	76
22	0.170	0.61	45	76	75
23	0.210	0.75	45	77	75
24	0.180	0.65	44	77	75
25	0.150	0.55	45	78	76

Fraction	Final Wt. (g)	Tare Wt. (g)	Blank Wt. (g)	Net Wt. (g)
DRY CATCH	0.0000	0.0000	0.0000	0.0000
FILTER	2.0940	1.0546	0.0000	1.0394

Fraction	Final Wt. (g)	Tare Wt. (g)	Vol. (ml)	Net Wt. (g)
PROBE RINSE	166.7431	166.6938	0.0	0.0493
IMPINGERS	0.0000	0.0000	0.0	0.0000

Probe Rinse Blank (mg/ml)= 0.0000
Impinger Blank (mg/ml)= 0.0000

FILE NAME - PREPART3 PROG.=VER 06/09/89
RUN # - PRELIMINARY PARTICULATE RUN 3 04-28-1993 15:42:26
LOCATION - DERAMUS FIELD STATION
DATE - 3/24/93
PROJECT # - 9712M-51-16

Initial Meter Volume (Cubic Feet)=	225.817	
Final Meter Volume (Cubic Feet)=	255.385	
Meter Factor=	1.023	
Final Leak Rate (cu ft/min)=	0.005	
Net Meter Volume (Cubic Feet)=	30.248	
Gas Volume (Dry Standard Cubic Feet)=	28.950	
Barometric Pressure (in Hg)=	29.07	
Static Pressure (Inches H20)=	-0.20	
Percent Oxygen=	20.5	
Percent Carbon Dioxide=	0.0	
Moisture Collected (ml)=	14.1	
Percent Water=	0.9	**Saturated Stack**
Average Meter Temperature (F)=	77	
Average Delta H (in H20)=	0.76	
Average Delta P (in H20)=	0.021	
Average Stack Temperature (F)=	42	
Dry Molecular Weight=	28.82	
Wet Molecular Weight=	28.72	
Average Square Root of Delta P (in H20)=	0.1434	
% Isokinetic=	99.7	
Pitot Coefficient=	0.84	
Sampling Time (Minutes)=	62.5	
Nozzle Diameter (Inches)=	0.419	
Stack Axis #1 (Inches)=	96.0	
Stack Axis #2 (Inches)=	96.0	
Rectangular Stack		
Stack Area (Square Feet)=	64.00	
Stack Velocity (Actual, Feet/min)=	479	
Flow Rate (Actual, Cubic ft/min)=	30,654	
Flow rate (Standard, Wet, Cubic ft/min)=	31,335	
Flow Rate (Standard, Dry, Cubic ft/min)=	31,052	

Particulate Loading - Front Half

Particulate Weight (g)=	0.1302	Corr. to 7% O2 & 12% CO2
Particulate Loading, Dry Std. (gr/scf)=	0.0693	1.9395 6.9267
Particulate Loading, Actual (gr/cu ft)=	0.0701	
Emission Rate (lb/hr)=	18.43	

No Back Half Analysis

* * METRIC UNITS * *

FILE NAME - PREPART3
RUN # - PRELIMINARY PARTICULATE RUN 3
LOCATION - DERAMUS FIELD STATION
DATE - 3/24/93
PROJECT # - 9712M-51-16

PROG.=VER 06/09/89
04-28-1993 15:42:27

Initial Meter Volume (Cubic Meters)=	6.394	
Final Meter Volume (Cubic Meters)=	7.231	
Meter Factor=	1.023	
Final Leak Rate (cu m/min)=	0.0001	
Net Meter Volume (Cubic Meters)=	0.857	
Gas Volume (Dry Standard Cubic Meters)=	0.820	
Barometric Pressure (mm Hg)=	738	
Static Pressure (mm H20)=	-5	
Percent Oxygen=	20.5	
Percent Carbon Dioxide=	0.0	
Moisture Collected (ml)=	14.1	
Percent Water=	0.9	**Saturated Stack**
Average Meter Temperature (C)=	25	
Average Delta H (mm H20)=	19.2	
Average Delta P (mm H20)=	0.5	
Average Stack Temperature (C)=	5	
Dry Molecular Weight=	28.82	
Wet Molecular Weight=	28.72	
Average Square Root of Delta P (mm H20)=	0.7227	
% Isokinetic=	99.7	
Pitot Coefficient=	0.84	
Sampling Time (Minutes)=	62.5	
Nozzle Diameter (mm)=	10.64	
Stack Axis #1 (Meters)=	2.438	
Stack Axis #2 (Meters)=	2.438	
Rectangular Stack		
Stack Area (Square Meters)=	5.946	
Stack Velocity (Actual, m/min)=	146	
Flow rate (Actual, Cubic m/min)=	868	
Flow rate (Standard, Wet, Cubic m/min)=	887	
Flow rate (Standard, Dry, Cubic m/min)=	879	

Particulate Loading - Front Half

Particulate Weight (g)=	0.1302	Corr. to 7% O2 & 12% CO2
Particulate Loading, Dry Std. (mg/cu m)=	158.8	4447.7 15884.5
Particulate Loading, Actual (mg/cu m)=	160.8	
Emission Rate (kg/hr)=	8.37	

No Back Half Analysis

FILE NAME - PREPART3
RUN # - PRELIMINARY PARTICULATE RUN 3
LOCATION - DERAMUS FIELD STATION
DATE - 3/24/93
PROJECT # - 9712M-51-16

PROG.=VER 06/09/89
04-28-1993 15:42:27

Point #	Delta P (in. H20)	Delta H (in. H20)	Stack T (F)	Meter T In(F)	Meter T Out(F)
1	0.014	0.50	42	77	77
2	0.022	0.80	43	77	76
3	0.022	0.80	43	77	76
4	0.022	0.80	43	78	76
5	0.024	0.87	42	78	76
6	0.020	0.73	42	77	77
7	0.026	0.95	42	77	77
8	0.026	0.95	42	77	77
9	0.028	1.00	42	78	76
10	0.028	1.00	42	79	76
11	0.012	0.43	41	77	76
12	0.025	0.90	41	77	76
13	0.035	1.20	42	79	77
14	0.030	1.10	41	78	76
15	0.025	0.91	41	78	76
16	0.015	0.54	42	77	76
17	0.016	0.58	41	77	76
18	0.015	0.54	41	77	75
19	0.017	0.62	41	77	75
20	0.016	0.58	41	78	76
21	0.016	0.58	41	77	76
22	0.022	0.80	41	77	76
23	0.015	0.54	41	77	76
24	0.018	0.65	41	78	76
25	0.015	0.55	41	79	76

Fraction	Final Wt. (g)	Tare Wt. (g)	Blank Wt. (g)	Net Wt. (g)
DRY CATCH	0.0000	0.0000	0.0000	0.0000
FILTER	1.1493	1.0457	0.0000	0.1036

Fraction	Final Wt. (g)	Tare Wt. (g)	Vol. (ml)	Net Wt. (g)
PROBE RINSE	165.5971	165.5705	0.0	0.0266
IMPINGERS	0.0000	0.0000	0.0	0.0000

Probe Rinse Blank (mg/ml)= 0.0000
Impinger Blank (mg/ml)= 0.0000

FILE NAME - PREPART4
RUN # - PRELIMINARY PARTICULATE RUN 4
LOCATION - DERAMUS FIELD STATION
DATE - 3/24/93
PROJECT # - 9712M-51-16

PROG.=VER 06/09/89
04-30-1993 10:29:55

Initial Meter Volume (Cubic Feet)=	113.515
Final Meter Volume (Cubic Feet)=	146.865
Meter Factor=	1.017
Final Leak Rate (cu ft/min)=	0.005
Net Meter Volume (Cubic Feet)=	33.917
Gas Volume (Dry Standard Cubic Feet)=	32.452
Barometric Pressure (in Hg)=	29.07
Static Pressure (Inches H20)=	-0.20
Percent Oxygen=	20.5
Percent Carbon Dioxide=	0.0
Moisture Collected (ml)=	4.9
Percent Water=	0.7
Average Meter Temperature (F)=	78
Average Delta H (in H20)=	1.39
Average Delta P (in H20)=	0.032
Average Stack Temperature (F)=	42
Dry Molecular Weight=	28.82
Wet Molecular Weight=	28.74
Average Square Root of Delta P (in H20)=	0.1764
% Isokinetic=	91.2
Pitot Coefficient=	0.84
Sampling Time (Minutes)=	62.5
Nozzle Diameter (Inches)=	0.418
Stack Axis #1 (Inches)=	96.0
Stack Axis #2 (Inches)=	96.0
Rectangular Stack	
Stack Area (Square Feet)=	64.00
Stack Velocity (Actual, Feet/min)=	589
Flow Rate (Actual, Cubic ft/min)=	37,707
Flow rate (Standard, Wet, Cubic ft/min)=	38,514
Flow Rate (Standard, Dry, Cubic ft/min)=	38,242

Particulate Loading - Front Half

Particulate Weight (g)=	0.2382	Corr. to 7% O2 & 12% CO2
Particulate Loading, Dry Std. (gr/scf)=	0.1130	3.1651 11.3039
Particulate Loading, Actual (gr/cu ft)=	0.1146	
Emission Rate (lb/hr)=	37.05	

No Back Half Analysis

* * METRIC UNITS * *

FILE NAME - PREPART4
RUN # - PRELIMINARY PARTICULATE RUN 4
LOCATION - DERAMUS FIELD STATION
DATE - 3/24/93
PROJECT # - 9712M-51-16

PROG.=VER 06/09/89
04-30-1993 10:29:56

Initial Meter Volume (Cubic Meters)=	3.214
Final Meter Volume (Cubic Meters)=	4.159
Meter Factor=	1.017
Final Leak Rate (cu m/min)=	0.0001
Net Meter Volume (Cubic Meters)=	0.960
Gas Volume (Dry Standard Cubic Meters)=	0.919
Barometric Pressure (mm Hg)=	738
Static Pressure (mm H20)=	-5
Percent Oxygen=	20.5
Percent Carbon Dioxide=	0.0
Moisture Collected (ml)=	4.9
Percent Water=	0.7
Average Meter Temperature (C)=	25
Average Delta H (mm H20)=	35.2
Average Delta P (mm H20)=	0.8
Average Stack Temperature (C)=	6
Dry Molecular Weight=	28.82
Wet Molecular Weight=	28.74
Average Square Root of Delta P (mm H20)=	0.8890
% Isokinetic=	91.2
Pitot Coefficient=	0.84
Sampling Time (Minutes)=	62.5
Nozzle Diameter (mm)=	10.62
Stack Axis #1 (Meters)=	2.438
Stack Axis #2 (Meters)=	2.438
Rectangular Stack	
Stack Area (Square Meters)=	5.946
Stack Velocity (Actual, m/min)=	180
Flow rate (Actual, Cubic m/min)=	1,068
Flow rate (Standard, Wet, Cubic m/min)=	1,091
Flow rate (Standard, Dry, Cubic m/min)=	1,083

Particulate Loading - Front Half

		Corr. to 7% O2	& 12% CO2
Particulate Weight (g)=	0.2382		
Particulate Loading, Dry Std. (mg/cu m)=	259.2	7258.3	25922.4
Particulate Loading, Actual (mg/cu m)=	262.8		
Emission Rate (kg/hr)=	16.82		

No Back Half Analysis

FILE NAME - PREPART4
RUN # - PRELIMINARY PARTICULATE RUN 4
LOCATION - DERAMUS FIELD STATION
DATE - 3/24/93
PROJECT # - 9712M-51-16

PROG.=VER 06/09/89
04-30-1993 10:29:56

Point #	Delta P (in. H20)	Delta H (in. H20)	Stack T (F)	Meter T In(F)	Meter T Out(F)
1	0.015	0.73	43	77	76
2	0.016	0.92	43	77	76
3	0.015	1.40	43	79	77
4	0.017	2.50	43	80	77
5	0.016	2.50	43	82	77
6	0.030	1.00	43	83	77
7	0.030	1.10	42	79	77
8	0.035	1.30	42	79	77
9	0.030	1.20	42	80	77
10	0.030	1.30	42	81	77
11	0.032	1.17	41	78	77
12	0.035	1.28	41	78	77
13	0.036	1.32	42	78	77
14	0.035	1.28	42	79	77
15	0.030	1.10	42	80	77
16	0.035	1.28	42	77	77
17	0.050	1.83	41	78	76
18	0.045	1.65	42	78	76
19	0.045	1.65	42	78	76
20	0.040	1.47	41	79	76
21	0.040	1.47	42	80	77
22	0.035	1.29	41	79	77
23	0.035	1.28	42	80	77
24	0.027	0.99	41	77	76
25	0.045	1.65	42	78	76

Fraction	Final Wt. (g)	Tare Wt. (g)	Blank Wt. (g)	Net Wt. (g)
DRY CATCH	0.0000	0.0000	0.0000	0.0000
FILTER	1.2736	1.0507	0.0000	0.2229

Fraction	Final Wt. (g)	Tare Wt. (g)	Vol. (ml)	Net Wt. (g)
PROBE RINSE	160.7628	160.7475	0.0	0.0153
IMPINGERS	0.0000	0.0000	0.0	0.0000

Probe Rinse Blank (mg/ml)= 0.0000
Impinger Blank (mg/ml)= 0.0000

FILE NAME - PREPART5
RUN # - PRELIMINARY PARTICULATE RUN 5
LOCATION - DERAMUS FIELD STATION
DATE - 3/26/93
PROJECT # - 9712M-51-16

PROG.=VER 06/09/89
04-28-1993 15:49:04

Initial Meter Volume (Cubic Feet)=	255.760	
Final Meter Volume (Cubic Feet)=	290.030	
Meter Factor=	1.023	
Final Leak Rate (cu ft/min)=	0.010	
Net Meter Volume (Cubic Feet)=	35.058	
Gas Volume (Dry Standard Cubic Feet)=	33.450	
Barometric Pressure (in Hg)=	29.16	
Static Pressure (Inches H20)=	-0.40	
Percent Oxygen=	20.5	
Percent Carbon Dioxide=	0.0	
Moisture Collected (ml)=	10.0	
Percent Water=	1.1	**Saturated Stack**
Average Meter Temperature (F)=	80	
Average Delta H (in H20)=	1.01	
Average Delta P (in H20)=	0.091	
Average Stack Temperature (F)=	47	
Dry Molecular Weight=	28.82	
Wet Molecular Weight=	28.70	
Average Square Root of Delta P (in H20)=	0.2958	
% Isokinetic=	102.0	
Pitot Coefficient=	0.84	
Sampling Time (Minutes)=	62.5	
Nozzle Diameter (Inches)=	0.311	
Stack Axis #1 (Inches)=	96.0	
Stack Axis #2 (Inches)=	96.0	
Rectangular Stack		
Stack Area (Square Feet)=	64.00	
Stack Velocity (Actual, Feet/min)=	993	
Flow Rate (Actual, Cubic ft/min)=	63,540	
Flow rate (Standard, Wet, Cubic ft/min)=	64,380	
Flow Rate (Standard, Dry, Cubic ft/min)=	63,655	

Particulate Loading - Front Half

Particulate Weight (g)=	0.7745	Corr. to 7% O2 & 12% CO2
Particulate Loading, Dry Std. (gr/scf)=	0.3566	9.9840 35.6570
Particulate Loading, Actual (gr/cu ft)=	0.3571	
Emission Rate (lb/hr)=	194.52	

No Back Half Analysis

* * METRIC UNITS * *

FILE NAME - PREPART5 PROG.=VER 06/09/89
RUN # - PRELIMINARY PARTICULATE RUN 5 04-28-1993 15:49:04
LOCATION - DERAMUS FIELD STATION
DATE - 3/26/93
PROJECT # - 9712M-51-16

Initial Meter Volume (Cubic Meters)=	7.242	
Final Meter Volume (Cubic Meters)=	8.212	
Meter Factor=	1.023	
Final Leak Rate (cu m/min)=	0.0003	
Net Meter Volume (Cubic Meters)=	0.993	
Gas Volume (Dry Standard Cubic Meters)=	0.947	
Barometric Pressure (mm Hg)=	741	
Static Pressure (mm H20)=	-10	
Percent Oxygen=	20.5	
Percent Carbon Dioxide=	0.0	
Moisture Collected (ml)=	10.0	
Percent Water=	1.1	**Saturated Stack**
Average Meter Temperature (C)=	27	
Average Delta H (mm H20)=	25.6	
Average Delta P (mm H20)=	2.3	
Average Stack Temperature (C)=	9	
Dry Molecular Weight=	28.82	
Wet Molecular Weight=	28.70	
Average Square Root of Delta P (mm H20)=	1.4908	
% Isokinetic=	102.0	
Pitot Coefficient=	0.84	
Sampling Time (Minutes)=	62.5	
Nozzle Diameter (mm)=	7.90	
Stack Axis #1 (Meters)=	2.438	
Stack Axis #2 (Meters)=	2.438	
Rectangular Stack		
Stack Area (Square Meters)=	5.946	
Stack Velocity (Actual, m/min)=	303	
Flow rate (Actual, Cubic m/min)=	1,799	
Flow rate (Standard, Wet, Cubic m/min)=	1,823	
Flow rate (Standard, Dry, Cubic m/min)=	1,803	

Particulate Loading - Front Half

Particulate Weight (g)=	0.7745	Corr. to 7% O2 & 12% CO2
Particulate Loading, Dry Std. (mg/cu m)=	817.7	22895.5 81769.7
Particulate Loading, Actual (mg/cu m)=	818.9	
Emission Rate (kg/hr)=	88.31	

No Back Half Analysis

FILE NAME - PREPART5
RUN # - PRELIMINARY PARTICULATE RUN 5
LOCATION - DERAMUS FIELD STATION
DATE - 3/26/93
PROJECT # - 9712M-51-16

PROG.=VER 06/09/89
04-28-1993 15:49:04

Point #	Delta P (in. H20)	Delta H (in. H20)	Stack T (F)	Meter T In(F)	Meter T Out(F)
1	0.060	0.64	47	74	73
2	0.095	1.00	47	75	74
3	0.105	1.10	47	75	74
4	0.150	1.60	47	76	74
5	0.100	1.00	47	78	74
6	0.040	0.43	46	77	76
7	0.075	0.82	47	79	76
8	0.140	1.60	47	79	76
9	0.145	1.60	47	80	76
10	0.105	1.10	47	82	77
11	0.050	0.55	47	79	77
12	0.100	1.10	47	82	78
13	0.150	1.20	48	83	78
14	0.135	1.50	47	84	79
15	0.095	1.00	48	86	79
16	0.045	0.50	48	82	80
17	0.040	0.44	48	85	81
18	0.055	0.60	48	86	81
19	0.055	0.60	48	87	81
20	0.065	0.70	48	88	82
21	0.075	0.80	47	86	83
22	0.100	1.80	47	87	83
23	0.100	1.40	48	89	83
24	0.095	1.10	48	91	84
25	0.095	1.00	48	91	84

Fraction	Final Wt. (g)	Tare Wt. (g)	Blank Wt. (g)	Net Wt. (g)
DRY CATCH	0.0000	0.0000	0.0000	0.0000
FILTER	1.7334	1.0521	0.0000	0.6813

Fraction	Final Wt. (g)	Tare Wt. (g)	Vol. (ml)	Net Wt. (g)
PROBE RINSE	167.6115	167.5183	0.0	0.0932
IMPINGERS	0.0000	0.0000	0.0	0.0000

Probe Rinse Blank (mg/ml)= 0.0000
Impinger Blank (mg/ml)= 0.0000

FILE NAME - PREPART6
RUN # - PRELIMINARY PARTICULATE RUN 6
LOCATION - DERAMUS FIELD STATION
DATE - 3/26/93
PROJECT # - 9712M-51-16

PROG.=VER 06/09/89
04-28-1993 15:54:19

Initial Meter Volume (Cubic Feet)=	147.408	
Final Meter Volume (Cubic Feet)=	186.528	
Meter Factor=	1.017	
Final Leak Rate (cu ft/min)=	0.002	
Net Meter Volume (Cubic Feet)=	39.785	
Gas Volume (Dry Standard Cubic Feet)=	38.040	
Barometric Pressure (in Hg)=	29.16	
Static Pressure (Inches H20)=	-0.40	
Percent Oxygen=	20.5	
Percent Carbon Dioxide=	0.0	
Moisture Collected (ml)=	13.7	
Percent Water=	1.1	**Saturated Stack**
Average Meter Temperature (F)=	80	
Average Delta H (in H20)=	1.31	
Average Delta P (in H20)=	0.120	
Average Stack Temperature (F)=	48	
Dry Molecular Weight=	28.82	
Wet Molecular Weight=	28.70	
Average Square Root of Delta P (in H20)=	0.3416	
% Isokinetic=	100.5	
Pitot Coefficient=	0.84	
Sampling Time (Minutes)=	62.5	
Nozzle Diameter (Inches)=	0.311	
Stack Axis #1 (Inches)=	96.0	
Stack Axis #2 (Inches)=	96.0	
Rectangular Stack		
Stack Area (Square Feet)=	64.00	
Stack Velocity (Actual, Feet/min)=	1,147	
Flow Rate (Actual, Cubic ft/min)=	73,377	
Flow rate (Standard, Wet, Cubic ft/min)=	74,324	
Flow Rate (Standard, Dry, Cubic ft/min)=	73,482	

Particulate Loading - Front Half

Particulate Weight (g)=	0.7398	Corr. to 7% O2 & 12% CO2
Particulate Loading, Dry Std. (gr/scf)=	0.2995	8.3859 29.9498
Particulate Loading, Actual (gr/cu ft)=	0.2998	
Emission Rate (lb/hr)=	188.61	

No Back Half Analysis

* * METRIC UNITS * *

FILE NAME - PREPART6 PROG.=VER 06/09/89
RUN # - PRELIMINARY PARTICULATE RUN 6 04-28-1993 15:54:20
LOCATION - DERAMUS FIELD STATION
DATE - 3/26/93
PROJECT # - 9712M-51-16

Initial Meter Volume (Cubic Meters)=	4.174	
Final Meter Volume (Cubic Meters)=	5.282	
Meter Factor=	1.017	
Final Leak Rate (cu m/min)=	0.0001	
Net Meter Volume (Cubic Meters)=	1.127	
Gas Volume (Dry Standard Cubic Meters)=	1.077	
Barometric Pressure (mm Hg)=	741	
Static Pressure (mm H20)=	-10	
Percent Oxygen=	20.5	
Percent Carbon Dioxide=	0.0	
Moisture Collected (ml)=	13.7	
Percent Water=	1.1	**Saturated Stack**
Average Meter Temperature (C)=	27	
Average Delta H (mm H20)=	33.3	
Average Delta P (mm H20)=	3.0	
Average Stack Temperature (C)=	9	
Dry Molecular Weight=	28.82	
Wet Molecular Weight=	28.70	
Average Square Root of Delta P (mm H20)=	1.7214	
% Isokinetic=	100.5	
Pitot Coefficient=	0.84	
Sampling Time (Minutes)=	62.5	
Nozzle Diameter (mm)=	7.90	
Stack Axis #1 (Meters)=	2.438	
Stack Axis #2 (Meters)=	2.438	
Rectangular Stack		
Stack Area (Square Meters)=	5.946	
Stack Velocity (Actual, m/min)=	349	
Flow rate (Actual, Cubic m/min)=	2,078	
Flow rate (Standard, Wet, Cubic m/min)=	2,105	
Flow rate (Standard, Dry, Cubic m/min)=	2,081	

Particulate Loading - Front Half

Particulate Weight (g)=	0.7398	Corr. to 7% O2 & 12% CO2
Particulate Loading, Dry Std. (mg/cu m)=	686.8	19230.9 68681.7
Particulate Loading, Actual (mg/cu m)=	687.5	
Emission Rate (kg/hr)=	85.63	

No Back Half Analysis

FILE NAME - PREPART6
RUN # - PRELIMINARY PARTICULATE RUN 6
LOCATION - DERAMUS FIELD STATION
DATE - 3/26/93
PROJECT # - 9712M-51-16

PROG.=VER 06/09/89
04-28-1993 15:54:20

Point #	Delta P (in. H20)	Delta H (in. H20)	Stack T (F)	Meter T In(F)	Meter T Out(F)
1	0.140	1.55	46	74	73
2	0.100	1.10	47	74	73
3	0.090	0.99	47	75	73
4	0.065	0.71	47	75	73
5	0.045	0.49	47	76	74
6	0.150	1.50	47	76	74
7	0.130	1.50	46	77	75
8	0.145	1.50	47	78	75
9	0.105	1.20	47	80	75
10	0.085	0.94	47	81	76
11	0.080	0.89	48	79	77
12	0.130	1.40	47	81	77
13	0.155	1.70	47	82	77
14	0.150	1.60	48	84	78
15	0.120	1.25	48	86	78
16	0.085	0.95	48	82	80
17	0.115	1.25	48	84	80
18	0.165	1.85	48	86	80
19	0.175	1.92	49	88	80
20	0.180	2.00	48	90	81
21	0.065	0.75	48	85	82
22	0.105	1.15	47	87	82
23	0.125	1.40	48	88	82
24	0.155	1.75	49	89	83
25	0.130	1.45	49	90	83

Fraction	Final Wt. (g)	Tare Wt. (g)	Blank Wt. (g)	Net Wt. (g)
DRY CATCH	0.0000	0.0000	0.0000	0.0000
FILTER	1.6817	1.0516	0.0000	0.6301

Fraction	Final Wt. (g)	Tare Wt. (g)	Vol. (ml)	Net Wt. (g)
PROBE RINSE	163.5801	163.4704	0.0	0.1097
IMPINGERS	0.0000	0.0000	0.0	0.0000

Probe Rinse Blank (mg/ml) = 0.0000
Impinger Blank (mg/ml) = 0.0000

FILE NAME - PARTMT7
RUN # - PARTICULATE/METALS RUN 7
LOCATION - DERAMUS FIELD STATION
DATE - 3/29/93
PROJECT # - 9712M-51-16

PROG.=VER 06/09/89
04-28-1993 16:02:13

Initial Meter Volume (Cubic Feet)=	290.499	
Final Meter Volume (Cubic Feet)=	325.010	
Meter Factor=	1.023	
Final Leak Rate (cu ft/min)=	0.005	
Net Meter Volume (Cubic Feet)=	35.305	
Gas Volume (Dry Standard Cubic Feet)=	33.260	
Barometric Pressure (in Hg)=	28.84	
Static Pressure (Inches H20)=	-0.47	
Percent Oxygen=	20.5	
Percent Carbon Dioxide=	0.0	
Moisture Collected (ml)=	16.8	
Percent Water=	2.3	**Saturated Stack**
Average Meter Temperature (F)=	81	
Average Delta H (in H20)=	1.00	
Average Delta P (in H20)=	0.099	
Average Stack Temperature (F)=	66	
Dry Molecular Weight=	28.82	
Wet Molecular Weight=	28.58	
Average Square Root of Delta P (in H20)=	0.3104	
% Isokinetic=	100.7	
Pitot Coefficient=	0.83	
Sampling Time (Minutes)=	62.5	
Nozzle Diameter (Inches)=	0.311	
Stack Axis #1 (Inches)=	96.0	
Stack Axis #2 (Inches)=	96.0	
Rectangular Stack		
Stack Area (Square Feet)=	64.00	
Stack Velocity (Actual, Feet/min)=	1,061	
Flow Rate (Actual, Cubic ft/min)=	67,892	
Flow rate (Standard, Wet, Cubic ft/min)=	65,577	
Flow Rate (Standard, Dry, Cubic ft/min)=	64,096	

Particulate Loading - Front Half

Particulate Weight (g)=	0.2029	Corr. to 7% O2 & 12% CO2
Particulate Loading, Dry Std. (gr/scf)=	0.0939	2.6305 9.3946
Particulate Loading, Actual (gr/cu ft)=	0.0887	
Emission Rate (lb/hr)=	51.60	

No Back Half Analysis

* * METRIC UNITS * *

FILE NAME - PARTMT7
RUN # - PARTICULATE/METALS RUN 7
LOCATION - DERAMUS FIELD STATION
DATE - 3/29/93
PROJECT # - 9712M-51-16

PROG.=VER 06/09/89
04-28-1993 16:02:13

Initial Meter Volume (Cubic Meters)=	8.226	
Final Meter Volume (Cubic Meters)=	9.203	
Meter Factor=	1.023	
Final Leak Rate (cu m/min)=	0.0001	
Net Meter Volume (Cubic Meters)=	1.000	
Gas Volume (Dry Standard Cubic Meters)=	0.942	
Barometric Pressure (mm Hg)=	733	
Static Pressure (mm H20)=	-12	
Percent Oxygen=	20.5	
Percent Carbon Dioxide=	0.0	
Moisture Collected (ml)=	16.8	
Percent Water=	2.3	**Saturated Stack**
Average Meter Temperature (C)=	27	
Average Delta H (mm H20)=	25.4	
Average Delta P (mm H20)=	2.5	
Average Stack Temperature (C)=	19	
Dry Molecular Weight=	28.82	
Wet Molecular Weight=	28.58	
Average Square Root of Delta P (mm H20)=	1.5643	
% Isokinetic=	100.7	
Pitot Coefficient=	0.83	
Sampling Time (Minutes)=	62.5	
Nozzle Diameter (mm)=	7.90	
Stack Axis #1 (Meters)=	2.438	
Stack Axis #2 (Meters)=	2.438	
Rectangular Stack		
Stack Area (Square Meters)=	5.946	
Stack Velocity (Actual, m/min)=	323	
Flow rate (Actual, Cubic m/min)=	1,922	
Flow rate (Standard, Wet, Cubic m/min)=	1,857	
Flow rate (Standard, Dry, Cubic m/min)=	1,815	

Particulate Loading - Front Half

Particulate Weight (g)=	0.2029	Corr. to 7% O2 & 12% CO2
Particulate Loading, Dry Std. (mg/cu m)=	215.4	6032.3 21544.0
Particulate Loading, Actual (mg/cu m)=	203.3	
Emission Rate (kg/hr)=	23.43	

No Back Half Analysis

FILE NAME - PARTMT7
RUN # - PARTICULATE/METALS RUN 7
LOCATION - DERAMUS FIELD STATION
DATE - 3/29/93
PROJECT # - 9712M-51-16

PROG.=VER 06/09/89
04-28-1993 16:02:14

Point #	Delta P (in. H20)	Delta H (in. H20)	Stack T (F)	Meter T In(F)	Meter T Out(F)
1	0.155	1.60	62	77	76
2	0.095	1.00	64	76	77
3	0.150	1.60	63	77	76
4	0.125	1.30	63	78	76
5	0.120	1.30	63	79	77
6	0.090	0.94	63	78	77
7	0.095	1.00	65	80	77
8	0.140	1.50	66	80	77
9	0.130	1.40	65	81	77
10	0.060	0.62	67	83	78
11	0.065	0.60	67	83	78
12	0.050	0.50	66	83	79
13	0.065	0.60	66	84	79
14	0.075	0.78	67	84	80
15	0.065	0.68	67	85	80
16	0.075	0.70	68	82	81
17	0.090	0.85	68	85	81
18	0.085	0.75	67	86	81
19	0.070	0.65	68	87	82
20	0.065	0.58	69	88	82
21	0.100	0.94	69	84	83
22	0.110	1.05	69	88	84
23	0.115	1.20	68	89	84
24	0.145	1.50	68	90	84
25	0.135	1.40	69	92	85

Fraction	Final Wt. (g)	Tare Wt. (g)	Blank Wt. (g)	Net Wt. (g)
DRY CATCH	0.0000	0.0000	0.0000	0.0000
FILTER	1.2370	1.0625	0.0000	0.1745

Fraction	Final Wt. (g)	Tare Wt. (g)	Vol. (ml)	Net Wt. (g)
PROBE RINSE	163.9256	163.8972	0.0	0.0284
IMPINGERS	0.0000	0.0000	0.0	0.0000

Probe Rinse Blank (mg/ml)= 0.0000
Impinger Blank (mg/ml)= 0.0000

FILE NAME - PARTMTL8
RUN # - PARTICULATE/METALS RUN 8
LOCATION - DERAMUS FIELD STATION
DATE - 3/29/93
PROJECT # - 9712M-51-16

PROG.=VER 06/09/89
04-30-1993 10:31:46

Initial Meter Volume (Cubic Feet)=	188.014	
Final Meter Volume (Cubic Feet)=	224.718	
Meter Factor=	1.017	
Final Leak Rate (cu ft/min)=	0.002	
Net Meter Volume (Cubic Feet)=	37.328	
Gas Volume (Dry Standard Cubic Feet)=	35.271	
Barometric Pressure (in Hg)=	28.84	
Static Pressure (Inches H20)=	-0.47	
Percent Oxygen=	20.5	
Percent Carbon Dioxide=	0.0	
Moisture Collected (ml)=	22.2	
Percent Water=	2.3	**Saturated Stack**
Average Meter Temperature (F)=	80	
Average Delta H (in H20)=	1.13	
Average Delta P (in H20)=	0.108	
Average Stack Temperature (F)=	66	
Dry Molecular Weight=	28.82	
Wet Molecular Weight=	28.58	
Average Square Root of Delta P (in H20)=	0.3247	
% Isokinetic=	101.3	
Pitot Coefficient=	0.84	
Sampling Time (Minutes)=	62.5	
Nozzle Diameter (Inches)=	0.311	
Stack Axis #1 (Inches)=	96.0	
Stack Axis #2 (Inches)=	96.0	
Rectangular Stack		
Stack Area (Square Feet)=	64.00	
Stack Velocity (Actual, Feet/min)=	1,118	
Flow Rate (Actual, Cubic ft/min)=	71,577	
Flow rate (Standard, Wet, Cubic ft/min)=	69,141	
Flow Rate (Standard, Dry, Cubic ft/min)=	67,582	

Particulate Loading - Front Half

Particulate Weight (g)=	0.1395	Corr. to 7% O2 & 12% CO2
Particulate Loading, Dry Std. (gr/scf)=	0.0609	1.7053 6.0905
Particulate Loading, Actual (gr/cu ft)=	0.0575	
Emission Rate (lb/hr)=	35.28	

No Back Half Analysis

* * METRIC UNITS * *

FILE NAME - PARTMTL8
RUN # - PARTICULATE/METALS RUN 8
LOCATION - DERAMUS FIELD STATION
DATE - 3/29/93
PROJECT # - 9712M-51-16

PROG.=VER 06/09/89
04-30-1993 10:31:47

Initial Meter Volume (Cubic Meters)=	5.324	
Final Meter Volume (Cubic Meters)=	6.363	
Meter Factor=	1.017	
Final Leak Rate (cu m/min)=	0.0001	
Net Meter Volume (Cubic Meters)=	1.057	
Gas Volume (Dry Standard Cubic Meters)=	0.999	
Barometric Pressure (mm Hg)=	733	
Static Pressure (mm H20)=	-12	
Percent Oxygen=	20.5	
Percent Carbon Dioxide=	0.0	
Moisture Collected (ml)=	22.2	
Percent Water=	2.3	**Saturated Stack**
Average Meter Temperature (C)=	27	
Average Delta H (mm H20)=	28.8	
Average Delta P (mm H20)=	2.7	
Average Stack Temperature (C)=	19	
Dry Molecular Weight=	28.82	
Wet Molecular Weight=	28.58	
Average Square Root of Delta P (mm H20)=	1.6363	
% Isokinetic=	101.3	
Pitot Coefficient=	0.84	
Sampling Time (Minutes)=	62.5	
Nozzle Diameter (mm)=	7.90	
Stack Axis #1 (Meters)=	2.438	
Stack Axis #2 (Meters)=	2.438	
Rectangular Stack		
Stack Area (Square Meters)=	5.946	
Stack Velocity (Actual, m/min)=	341	
Flow rate (Actual, Cubic m/min)=	2,027	
Flow rate (Standard, Wet, Cubic m/min)=	1,958	
Flow rate (Standard, Dry, Cubic m/min)=	1,914	

Particulate Loading - Front Half

Particulate Weight (g)=	0.1395	Corr. to 7% O2 & 12% CO2
Particulate Loading, Dry Std. (mg/cu m)=	139.7	3910.8 13967.0
Particulate Loading, Actual (mg/cu m)=	131.8	
Emission Rate (kg/hr)=	16.01	

No Back Half Analysis

FILE NAME - PARTMTL8
RUN # - PARTICULATE/METALS RUN 8
LOCATION - DERAMUS FIELD STATION
DATE - 3/29/93
PROJECT # - 9712M-51-16

PROG.=VER 06/09/89
04-30-1993 10:31:47

Point #	Delta P (in. H20)	Delta H (in. H20)	Stack T (F)	Meter T In(F)	Meter T Out(F)
1	0.125	1.35	61	77	76
2	0.170	1.85	63	76	76
3	0.095	1.05	63	76	76
4	0.075	0.80	62	77	76
5	0.075	0.77	64	77	76
6	0.100	1.10	64	77	76
7	0.115	1.25	65	78	76
8	0.140	1.40	66	79	76
9	0.155	1.70	65	80	76
10	0.120	1.20	65	81	77
11	0.100	1.00	66	79	77
12	0.125	1.35	67	82	77
13	0.160	1.65	67	83	78
14	0.165	1.75	67	84	78
15	0.135	1.40	67	86	79
16	0.100	1.00	67	82	79
17	0.060	0.60	67	84	79
18	0.105	1.00	67	84	80
19	0.140	1.40	68	85	80
20	0.100	1.10	69	86	80
21	0.075	0.80	70	84	82
22	0.065	0.69	69	85	81
23	0.085	0.90	69	86	81
24	0.075	0.79	69	87	82
25	0.045	0.40	69	87	82

Fraction	Final Wt. (g)	Tare Wt. (g)	Blank Wt. (g)	Net Wt. (g)
DRY CATCH	0.0000	0.0000	0.0000	0.0000
FILTER	1.1397	1.0505	0.0000	0.0892

Fraction	Final Wt. (g)	Tare Wt. (g)	Vol. (ml)	Net Wt. (g)
PROBE RINSE	167.1299	167.0796	0.0	0.0503
IMPINGERS	0.0000	0.0000	0.0	0.0000

Probe Rinse Blank (mg/ml)= 0.0000
Impinger Blank (mg/ml)= 0.0000

FILE NAME - PARTMTL9
RUN # - PARTICULATE/METALS RUN 9
LOCATION - DERAMUS FIELD STATION
DATE - 3/29/93
PROJECT # - 9712M-51-16

PROG.=VER 06/09/89
04-30-1993 10:33:33

Initial Meter Volume (Cubic Feet)=	325.848
Final Meter Volume (Cubic Feet)=	359.768
Meter Factor=	1.025
Final Leak Rate (cu ft/min)=	0.005
Net Meter Volume (Cubic Feet)=	34.768
Gas Volume (Dry Standard Cubic Feet)=	32.506
Barometric Pressure (in Hg)=	28.79
Static Pressure (Inches H20)=	-0.47
Percent Oxygen=	20.5
Percent Carbon Dioxide=	0.0
Moisture Collected (ml)=	18.3
Percent Water=	2.6
Average Meter Temperature (F)=	84
Average Delta H (in H20)=	0.90
Average Delta P (in H20)=	0.088
Average Stack Temperature (F)=	77
Dry Molecular Weight=	28.82
Wet Molecular Weight=	28.54
Average Square Root of Delta P (in H20)=	0.2939
% Isokinetic=	105.4
Pitot Coefficient=	0.83
Sampling Time (Minutes)=	62.5
Nozzle Diameter (Inches)=	0.311
Stack Axis #1 (Inches)=	96.0
Stack Axis #2 (Inches)=	96.0
Rectangular Stack Stack Area (Square Feet)=	64.00
Stack Velocity (Actual, Feet/min)=	1,016
Flow Rate (Actual, Cubic ft/min)=	65,050
Flow rate (Standard, Wet, Cubic ft/min)=	61,434
Flow Rate (Standard, Dry, Cubic ft/min)=	59,847

Particulate Loading - Front Half

		Corr. to 7% O2	& 12% CO2
Particulate Weight (g)=	0.1121		
Particulate Loading, Dry Std. (gr/scf)=	0.0531	1.4870	5.3109
Particulate Loading, Actual (gr/cu ft)=	0.0488		
Emission Rate (lb/hr)=	27.24		

No Back Half Analysis

* * METRIC UNITS * *

FILE NAME - PARTMTL9
RUN # - PARTICULATE/METALS RUN 9
LOCATION - DERAMUS FIELD STATION
DATE - 3/29/93
PROJECT # - 9712M-51-16

PROG.=VER 06/09/89
04-30-1993 10:33:33

Initial Meter Volume (Cubic Meters)=	9.227
Final Meter Volume (Cubic Meters)=	10.187
Meter Factor=	1.025
Final Leak Rate (cu m/min)=	0.0001
Net Meter Volume (Cubic Meters)=	0.984
Gas Volume (Dry Standard Cubic Meters)=	0.920
Barometric Pressure (mm Hg)=	731
Static Pressure (mm H20)=	-12
Percent Oxygen=	20.5
Percent Carbon Dioxide=	0.0
Moisture Collected (ml)=	18.3
Percent Water=	2.6
Average Meter Temperature (C)=	29
Average Delta H (mm H20)=	22.7
Average Delta P (mm H20)=	2.2
Average Stack Temperature (C)=	25
Dry Molecular Weight=	28.82
Wet Molecular Weight=	28.54
Average Square Root of Delta P (mm H20)=	1.4811
% Isokinetic=	105.4
Pitot Coefficient=	0.83
Sampling Time (Minutes)=	62.5
Nozzle Diameter (mm)=	7.90
Stack Axis #1 (Meters)=	2.438
Stack Axis #2 (Meters)=	2.438
Rectangular Stack	
Stack Area (Square Meters)=	5.946
Stack Velocity (Actual, m/min)=	310
Flow rate (Actual, Cubic m/min)=	1,842
Flow rate (Standard, Wet, Cubic m/min)=	1,740
Flow rate (Standard, Dry, Cubic m/min)=	1,695

Particulate Loading - Front Half

		Corr. to 7% O2	& 12% CO2
Particulate Weight (g)=	0.1121		
Particulate Loading, Dry Std. (mg/cu m)=	121.8	3410.1	12179.0
Particulate Loading, Actual (mg/cu m)=	112.0		
Emission Rate (kg/hr)=	12.37		

No Back Half Analysis

FILE NAME - PARTMTL9
RUN # - PARTICULATE/METALS RUN 9
LOCATION - DERAMUS FIELD STATION
DATE - 3/29/93
PROJECT # - 9712M-51-16

PROG.=VER 06/09/89
04-30-1993 10:33:34

Point #	Delta P (in. H20)	Delta H (in. H20)	Stack T (F)	Meter T In(F)	Meter T Out(F)
1	0.070	0.61	76	80	79
2	0.120	1.20	77	81	79
3	0.135	1.28	77	81	80
4	0.100	1.20	77	82	80
5	0.100	1.20	76	82	80
6	0.065	0.66	76	82	80
7	0.070	0.65	77	83	80
8	0.075	1.20	78	83	81
9	0.080	1.30	77	85	81
10	0.080	0.90	78	87	81
11	0.100	0.93	77	84	82
12	0.050	0.42	79	86	82
13	0.055	0.46	78	87	83
14	0.050	0.45	79	87	83
15	0.050	0.51	79	88	83
16	0.070	0.62	76	85	84
17	0.070	0.64	77	88	84
18	0.095	0.90	76	88	84
19	0.110	1.05	76	89	85
20	0.105	1.00	77	91	85
21	0.090	0.83	78	89	86
22	0.100	0.93	78	90	86
23	0.115	1.05	78	91	86
24	0.125	1.20	78	92	87
25	0.125	1.20	78	93	87

Fraction	Final Wt. (g)	Tare Wt. (g)	Blank Wt. (g)	Net Wt. (g)
DRY CATCH	0.0000	0.0000	0.0000	0.0000
FILTER	1.1305	1.0482	0.0000	0.0823

Fraction	Final Wt. (g)	Tare Wt. (g)	Vol. (ml)	Net Wt. (g)
PROBE RINSE	166.0585	166.0287	0.0	0.0298
IMPINGERS	0.0000	0.0000	0.0	0.0000

Probe Rinse Blank (mg/ml)= 0.0000
Impinger Blank (mg/ml)= 0.0000

FILE NAME - PARTMT10
RUN # - PARTICULATE/METALS RUN 10
LOCATION - DERAMUS FIELD STATION
DATE - 3/29/93
PROJECT # - 9712M-51-16

PROG.=VER 06/09/89
04-30-1993 10:35:18

Initial Meter Volume (Cubic Feet)=	226.122
Final Meter Volume (Cubic Feet)=	262.905
Meter Factor=	1.017
Final Leak Rate (cu ft/min)=	0.003
Net Meter Volume (Cubic Feet)=	37.408
Gas Volume (Dry Standard Cubic Feet)=	35.066
Barometric Pressure (in Hg)=	28.78
Static Pressure (Inches H20)=	-0.47
Percent Oxygen=	20.5
Percent Carbon Dioxide=	0.0
Moisture Collected (ml)=	24.6
Percent Water=	3.2
Average Meter Temperature (F)=	83
Average Delta H (in H20)=	1.12
Average Delta P (in H20)=	0.108
Average Stack Temperature (F)=	77
Dry Molecular Weight=	28.82
Wet Molecular Weight=	28.47
Average Square Root of Delta P (in H20)=	0.3254
% Isokinetic=	102.5
Pitot Coefficient=	0.84
Sampling Time (Minutes)=	62.5
Nozzle Diameter (Inches)=	0.311
Stack Axis #1 (Inches)=	96.0
Stack Axis #2 (Inches)=	96.0
Rectangular Stack	
Stack Area (Square Feet)=	64.00
Stack Velocity (Actual, Feet/min)=	1,136
Flow Rate (Actual, Cubic ft/min)=	72,679
Flow rate (Standard, Wet, Cubic ft/min)=	68,636
Flow Rate (Standard, Dry, Cubic ft/min)=	66,440

Particulate Loading - Front Half

Particulate Weight (g)=	0.2141	Corr. to 7% O2 & 12% CO2
Particulate Loading, Dry Std. (gr/scf)=	0.0940	2.6328 9.4029
Particulate Loading, Actual (gr/cu ft)=	0.0859	
Emission Rate (lb/hr)=	53.54	

No Back Half Analysis

* * METRIC UNITS * *

FILE NAME - PARTMT10
RUN # - PARTICULATE/METALS RUN 10
LOCATION - DERAMUS FIELD STATION
DATE - 3/29/93
PROJECT # - 9712M-51-16

PROG.=VER 06/09/89
04-30-1993 10:35:18

Initial Meter Volume (Cubic Meters)=	6.403
Final Meter Volume (Cubic Meters)=	7.444
Meter Factor=	1.017
Final Leak Rate (cu m/min)=	0.0001
Net Meter Volume (Cubic Meters)=	1.059
Gas Volume (Dry Standard Cubic Meters)=	0.993
Barometric Pressure (mm Hg)=	731
Static Pressure (mm H20)=	-12
Percent Oxygen=	20.5
Percent Carbon Dioxide=	0.0
Moisture Collected (ml)=	24.6
Percent Water=	3.2
Average Meter Temperature (C)=	28
Average Delta H (mm H20)=	28.4
Average Delta P (mm H20)=	2.7
Average Stack Temperature (C)=	25
Dry Molecular Weight=	28.82
Wet Molecular Weight=	28.47
Average Square Root of Delta P (mm H20)=	1.6399
% Isokinetic=	102.5
Pitot Coefficient=	0.84
Sampling Time (Minutes)=	62.5
Nozzle Diameter (mm)=	7.90
Stack Axis #1 (Meters)=	2.438
Stack Axis #2 (Meters)=	2.438
Rectangular Stack	
Stack Area (Square Meters)=	5.946
Stack Velocity (Actual, m/min)=	346
Flow rate (Actual, Cubic m/min)=	2,058
Flow rate (Standard, Wet, Cubic m/min)=	1,944
Flow rate (Standard, Dry, Cubic m/min)=	1,881

Particulate Loading - Front Half

		Corr. to 7% O2	& 12% CO2
Particulate Weight (g)=	0.2141		
Particulate Loading, Dry Std. (mg/cu m)=	215.6	6037.6	21563.0
Particulate Loading, Actual (mg/cu m)=	197.0		
Emission Rate (kg/hr)=	24.31		

No Back Half Analysis

FILE NAME - PARTMT10
RUN # - PARTICULATE/METALS RUN 10
LOCATION - DERAMUS FIELD STATION
DATE - 3/29/93
PROJECT # - 9712M-51-16

PROG.=VER 06/09/89
04-30-1993 10:35:19

Point #	Delta P (in. H20)	Delta H (in. H20)	Stack T (F)	Meter T In(F)	Meter T Out(F)
1	0.120	1.25	75	78	78
2	0.155	1.65	75	78	78
3	0.120	1.30	78	79	78
4	0.120	1.26	77	80	78
5	0.095	1.00	77	81	78
6	0.095	1.00	77	81	79
7	0.150	1.30	77	81	79
8	0.145	1.55	78	83	79
9	0.155	1.60	77	85	80
10	0.130	1.37	79	86	80
11	0.100	1.00	78	83	81
12	0.140	1.40	79	85	81
13	0.150	1.55	77	86	81
14	0.130	1.40	77	88	81
15	0.110	1.17	78	89	82
16	0.110	1.10	77	89	83
17	0.085	0.90	76	87	83
18	0.110	1.15	77	88	83
19	0.075	0.80	76	89	83
20	0.075	0.80	77	90	84
21	0.070	0.74	77	86	84
22	0.055	0.55	78	88	84
23	0.075	0.75	77	88	84
24	0.080	0.81	77	89	84
25	0.055	0.53	78	90	85

Fraction	Final Wt. (g)	Tare Wt. (g)	Blank Wt. (g)	Net Wt. (g)
DRY CATCH	0.0000	0.0000	0.0000	0.0000
FILTER	1.2070	1.0568	0.0000	0.1502

Fraction	Final Wt. (g)	Tare Wt. (g)	Vol. (ml)	Net Wt. (g)
PROBE RINSE	164.3569	164.2930	0.0	0.0639
IMPINGERS	0.0000	0.0000	0.0	0.0000

Probe Rinse Blank (mg/ml) = 0.0000
Impinger Blank (mg/ml) = 0.0000

FILE NAME - PARTMT11
RUN # - PARTICULATE/METALS RUN 11
LOCATION - DERAMUS FIELD STATION
DATE - 3/30/93
PROJECT # - 9712M-51-16

PROG.=VER 06/09/89
04-28-1993 16:21:02

Initial Meter Volume (Cubic Feet)=	359.953
Final Meter Volume (Cubic Feet)=	392.698
Meter Factor=	1.023
Final Leak Rate (cu ft/min)=	0.005
Net Meter Volume (Cubic Feet)=	33.498
Gas Volume (Dry Standard Cubic Feet)=	31.793
Barometric Pressure (in Hg)=	28.66
Static Pressure (Inches H20)=	-0.47
Percent Oxygen=	20.5
Percent Carbon Dioxide=	0.0
Moisture Collected (ml)=	12.5
Percent Water=	1.8
Average Meter Temperature (F)=	74
Average Delta H (in H20)=	0.86
Average Delta P (in H20)=	0.091
Average Stack Temperature (F)=	66
Dry Molecular Weight=	28.82
Wet Molecular Weight=	28.62
Average Square Root of Delta P (in H20)=	0.2971
% Isokinetic=	100.5
Pitot Coefficient=	0.83
Sampling Time (Minutes)=	62.5
Nozzle Diameter (Inches)=	0.311
Stack Axis #1 (Inches)=	96.0
Stack Axis #2 (Inches)=	96.0
Rectangular Stack	
Stack Area (Square Feet)=	64.00
Stack Velocity (Actual, Feet/min)=	1,017
Flow Rate (Actual, Cubic ft/min)=	65,115
Flow rate (Standard, Wet, Cubic ft/min)=	62,563
Flow Rate (Standard, Dry, Cubic ft/min)=	61,426

Particulate Loading - Front Half

		Corr. to 7% O2	& 12% CO2
Particulate Weight (g)=	0.0497		
Particulate Loading, Dry Std. (gr/scf)=	0.0241	0.6740	2.4072
Particulate Loading, Actual (gr/cu ft)=	0.0227		
Emission Rate (lb/hr)=	12.67		

No Back Half Analysis

* * METRIC UNITS * *

FILE NAME - PARTMT11
RUN # - PARTICULATE/METALS RUN 11
LOCATION - DERAMUS FIELD STATION
DATE - 3/30/93
PROJECT # - 9712M-51-16

PROG.=VER 06/09/89
04-28-1993 16:21:02

Initial Meter Volume (Cubic Meters)=	10.192
Final Meter Volume (Cubic Meters)=	11.120
Meter Factor=	1.023
Final Leak Rate (cu m/min)=	0.0001
Net Meter Volume (Cubic Meters)=	0.949
Gas Volume (Dry Standard Cubic Meters)=	0.900
Barometric Pressure (mm Hg)=	728
Static Pressure (mm H20)=	-12
Percent Oxygen=	20.5
Percent Carbon Dioxide=	0.0
Moisture Collected (ml)=	12.5
Percent Water=	1.8
Average Meter Temperature (C)=	23
Average Delta H (mm H20)=	21.7
Average Delta P (mm H20)=	2.3
Average Stack Temperature (C)=	19
Dry Molecular Weight=	28.82
Wet Molecular Weight=	28.62
Average Square Root of Delta P (mm H20)=	1.4976
% Isokinetic=	100.5
Pitot Coefficient=	0.83
Sampling Time (Minutes)=	62.5
Nozzle Diameter (mm)=	7.90
Stack Axis #1 (Meters)=	2.438
Stack Axis #2 (Meters)=	2.438
Rectangular Stack	
Stack Area (Square Meters)=	5.946
Stack Velocity (Actual, m/min)=	310
Flow rate (Actual, Cubic m/min)=	1,844
Flow rate (Standard, Wet, Cubic m/min)=	1,772
Flow rate (Standard, Dry, Cubic m/min)=	1,739

Particulate Loading - Front Half

		Corr. to 7% O2	& 12% CO2
Particulate Weight (g)=	0.0497		
Particulate Loading, Dry Std. (mg/cu m)=	55.2	1545.7	5520.3
Particulate Loading, Actual (mg/cu m)=	52.1		
Emission Rate (kg/hr)=	5.75		

No Back Half Analysis

FILE NAME - PARTMT11
RUN # - PARTICULATE/METALS RUN 11
LOCATION - DERAMUS FIELD STATION
DATE - 3/30/93
PROJECT # - 9712M-51-16

PROG.=VER 06/09/89
04-28-1993 16:21:02

Point #	Delta P (in. H20)	Delta H (in. H20)	Stack T (F)	Meter T In(F)	Meter T Out(F)
1	0.085	0.76	67	66	70
2	0.130	1.20	66	68	66
3	0.145	1.40	65	68	66
4	0.160	1.50	66	70	66
5	0.110	1.10	65	71	67
6	0.075	0.67	65	72	67
7	0.060	0.51	66	72	68
8	0.105	0.91	65	73	68
9	0.095	0.94	65	73	69
10	0.065	0.59	66	74	79
11	0.050	0.43	65	73	70
12	0.050	0.44	65	75	71
13	0.060	0.53	65	75	71
14	0.060	0.62	65	76	71
15	0.050	0.48	65	77	72
16	0.070	0.63	66	75	73
17	0.080	0.75	66	78	74
18	0.080	0.75	67	79	74
19	0.095	0.95	66	80	74
20	0.095	0.96	67	82	75
21	0.095	0.95	66	79	76
22	0.100	0.95	66	83	77
23	0.130	1.20	66	84	77
24	0.140	1.36	67	85	78
25	0.085	0.80	66	87	78

Fraction	Final Wt. (g)	Tare Wt. (g)	Blank Wt. (g)	Net Wt. (g)
DRY CATCH	0.0000	0.0000	0.0000	0.0000
FILTER	1.0774	1.0467	0.0000	0.0307

Fraction	Final Wt. (g)	Tare Wt. (g)	Vol. (ml)	Net Wt. (g)
PROBE RINSE	165.7405	165.7215	0.0	0.0190
IMPINGERS	0.0000	0.0000	0.0	0.0000

Probe Rinse Blank (mg/ml) = 0.0000
Impinger Blank (mg/ml) = 0.0000

FILE NAME - PARTMT12
RUN # - PARTICULATE/METALS RUN 12
LOCATION - DERAMUS FIELD STATION
DATE - 3/30/93
PROJECT # - 9712M-51-16

PROG.=VER 06/09/89
04-28-1993 16:24:42

Initial Meter Volume (Cubic Feet)=	265.786	
Final Meter Volume (Cubic Feet)=	299.799	
Meter Factor=	1.017	
Final Leak Rate (cu ft/min)=	0.006	
Net Meter Volume (Cubic Feet)=	34.591	
Gas Volume (Dry Standard Cubic Feet)=	32.835	
Barometric Pressure (in Hg)=	28.66	
Static Pressure (Inches H20)=	-0.47	
Percent Oxygen=	20.5	
Percent Carbon Dioxide=	0.0	
Moisture Collected (ml)=	18.7	
Percent Water=	2.2	**Saturated Stack**
Average Meter Temperature (F)=	74	
Average Delta H (in H20)=	0.98	
Average Delta P (in H20)=	0.094	
Average Stack Temperature (F)=	65	
Dry Molecular Weight=	28.82	
Wet Molecular Weight=	28.58	
Average Square Root of Delta P (in H20)=	0.3022	
% Isokinetic=	101.5	
Pitot Coefficient=	0.84	
Sampling Time (Minutes)=	62.5	
Nozzle Diameter (Inches)=	0.311	
Stack Axis #1 (Inches)=	96.0	
Stack Axis #2 (Inches)=	96.0	
Rectangular Stack		
Stack Area (Square Feet)=	64.00	
Stack Velocity (Actual, Feet/min)=	1,043	
Flow Rate (Actual, Cubic ft/min)=	66,770	
Flow rate (Standard, Wet, Cubic ft/min)=	64,197	
Flow Rate (Standard, Dry, Cubic ft/min)=	62,782	

Particulate Loading - Front Half

Particulate Weight (g)=	0.0705	Corr. to 7% O2 & 12% CO2
Particulate Loading, Dry Std. (gr/scf)=	0.0331	0.9259 3.3066
Particulate Loading, Actual (gr/cu ft)=	0.0311	
Emission Rate (lb/hr)=	17.79	

No Back Half Analysis

* * METRIC UNITS * *

FILE NAME - PARTMT12 PROG.=VER 06/09/89
RUN # - PARTICULATE/METALS RUN 12 04-28-1993 16:24:42
LOCATION - DERAMUS FIELD STATION
DATE - 3/30/93
PROJECT # - 9712M-51-16

Initial Meter Volume (Cubic Meters)=	7.526	
Final Meter Volume (Cubic Meters)=	8.489	
Meter Factor=	1.017	
Final Leak Rate (cu m/min)=	0.0002	
Net Meter Volume (Cubic Meters)=	0.979	
Gas Volume (Dry Standard Cubic Meters)=	0.930	
Barometric Pressure (mm Hg)=	728	
Static Pressure (mm H20)=	-12	
Percent Oxygen=	20.5	
Percent Carbon Dioxide=	0.0	
Moisture Collected (ml)=	18.7	
Percent Water=	2.2	**Saturated Stack**
Average Meter Temperature (C)=	23	
Average Delta H (mm H20)=	25.0	
Average Delta P (mm H20)=	2.4	
Average Stack Temperature (C)=	19	
Dry Molecular Weight=	28.82	
Wet Molecular Weight=	28.58	
Average Square Root of Delta P (mm H20)=	1.5230	
% Isokinetic=	101.5	
Pitot Coefficient=	0.84	
Sampling Time (Minutes)=	62.5	
Nozzle Diameter (mm)=	7.90	
Stack Axis #1 (Meters)=	2.438	
Stack Axis #2 (Meters)=	2.438	
Rectangular Stack		
Stack Area (Square Meters)=	5.946	
Stack Velocity (Actual, m/min)=	318	
Flow rate (Actual, Cubic m/min)=	1,891	
Flow rate (Standard, Wet, Cubic m/min)=	1,818	
Flow rate (Standard, Dry, Cubic m/min)=	1,778	

Particulate Loading - Front Half

Particulate Weight (g)=	0.0705	Corr. to 7% O2 & 12% CO2
Particulate Loading, Dry Std. (mg/cu m)=	75.8	2123.2 7582.8
Particulate Loading, Actual (mg/cu m)=	71.3	
Emission Rate (kg/hr)=	8.08	

No Back Half Analysis

FILE NAME - PARTMT12
RUN # - PARTICULATE/METALS RUN 12
LOCATION - DERAMUS FIELD STATION
DATE - 3/30/93
PROJECT # - 9712M-51-16

PROG.=VER 06/09/89
04-28-1993 16:24:42

Point #	Delta P (in. H20)	Delta H (in. H20)	Stack T (F)	Meter T In(F)	Meter T Out(F)
1	0.090	0.94	65	65	65
2	0.095	0.99	65	66	65
3	0.115	1.20	65	67	65
4	0.075	0.77	66	69	66
5	0.075	0.77	65	71	66
6	0.080	0.84	65	70	68
7	0.120	1.25	65	73	68
8	0.170	1.80	65	74	68
9	0.160	1.70	65	76	69
10	0.130	1.38	66	79	70
11	0.080	0.85	66	76	71
12	0.105	1.10	65	77	71
13	0.140	1.50	65	78	71
14	0.135	1.40	65	80	72
15	0.095	1.00	64	82	73
16	0.065	0.67	66	80	74
17	0.085	0.85	65	79	74
18	0.105	1.10	65	80	74
19	0.075	0.80	65	81	75
20	0.065	0.69	66	82	75
21	0.060	0.64	66	81	76
22	0.045	0.48	67	81	76
23	0.055	0.59	66	82	77
24	0.065	0.62	66	82	77
25	0.065	0.67	66	83	77

Fraction	Final Wt. (g)	Tare Wt. (g)	Blank Wt. (g)	Net Wt. (g)
DRY CATCH	0.0000	0.0000	0.0000	0.0000
FILTER	1.0833	1.0451	0.0000	0.0382

Fraction	Final Wt. (g)	Tare Wt. (g)	Vol. (ml)	Net Wt. (g)
PROBE RINSE	160.8028	160.7705	0.0	0.0323
IMPINGERS	0.0000	0.0000	0.0	0.0000

Probe Rinse Blank (mg/ml)= 0.0000
Impinger Blank (mg/ml)= 0.0000

FILE NAME - PARTMT13
RUN # - PARTICULATE/METALS RUN 13
LOCATION - DERAMUS FIELD STATION
DATE - 3/30/93
PROJECT # - 9712M-51-16

PROG.=VER 06/09/89
04-28-1993 16:26:20

Initial Meter Volume (Cubic Feet)=	393.143	
Final Meter Volume (Cubic Feet)=	422.026	
Meter Factor=	1.023	
Final Leak Rate (cu ft/min)=	0.000	
Net Meter Volume (Cubic Feet)=	29.547	
Gas Volume (Dry Standard Cubic Feet)=	27.674	
Barometric Pressure (in Hg)=	28.60	
Static Pressure (Inches H20)=	-0.55	
Percent Oxygen=	20.5	
Percent Carbon Dioxide=	0.0	
Moisture Collected (ml)=	21.0	
Percent Water=	2.1	**Saturated Stack**
Average Meter Temperature (F)=	80	
Average Delta H (in H20)=	0.65	
Average Delta P (in H20)=	0.208	
Average Stack Temperature (F)=	64	
Dry Molecular Weight=	28.82	
Wet Molecular Weight=	28.59	
Average Square Root of Delta P (in H20)=	0.4487	
% Isokinetic=	100.8	
Pitot Coefficient=	0.83	
Sampling Time (Minutes)=	62.5	
Nozzle Diameter (Inches)=	0.236	
Stack Axis #1 (Inches)=	96.0	
Stack Axis #2 (Inches)=	96.0	
Rectangular Stack		
Stack Area (Square Feet)=	64.00	
Stack Velocity (Actual, Feet/min)=	1,537	
Flow Rate (Actual, Cubic ft/min)=	98,388	
Flow rate (Standard, Wet, Cubic ft/min)=	94,545	
Flow Rate (Standard, Dry, Cubic ft/min)=	92,523	

Particulate Loading - Front Half

Particulate Weight (g)=	0.0596	Corr. to 7% O2 & 12% CO2
Particulate Loading, Dry Std. (gr/scf)=	0.0332	0.9288 3.3170
Particulate Loading, Actual (gr/cu ft)=	0.0312	
Emission Rate (lb/hr)=	26.30	

No Back Half Analysis

* * METRIC UNITS * *

PROG.=VER 06/09/89
04-28-1993 16:26:20

FILE NAME - PARTMT13
RUN # - PARTICULATE/METALS RUN 13
LOCATION - DERAMUS FIELD STATION
DATE - 3/30/93
PROJECT # - 9712M-51-16

Initial Meter Volume (Cubic Meters)=	11.132	
Final Meter Volume (Cubic Meters)=	11.950	
Meter Factor=	1.023	
Final Leak Rate (cu m/min)=	0.0000	
Net Meter Volume (Cubic Meters)=	0.837	
Gas Volume (Dry Standard Cubic Meters)=	0.784	
Barometric Pressure (mm Hg)=	726	
Static Pressure (mm H20)=	-14	
Percent Oxygen=	20.5	
Percent Carbon Dioxide=	0.0	
Moisture Collected (ml)=	21.0	
Percent Water=	2.1	**Saturated Stack**
Average Meter Temperature (C)=	26	
Average Delta H (mm H20)=	16.6	
Average Delta P (mm H20)=	5.3	
Average Stack Temperature (C)=	18	
Dry Molecular Weight=	28.82	
Wet Molecular Weight=	28.59	
Average Square Root of Delta P (mm H20)=	2.2616	
% Isokinetic=	100.8	
Pitot Coefficient=	0.83	
Sampling Time (Minutes)=	62.5	
Nozzle Diameter (mm)=	5.99	
Stack Axis #1 (Meters)=	2.438	
Stack Axis #2 (Meters)=	2.438	
Rectangular Stack		
Stack Area (Square Meters)=	5.946	
Stack Velocity (Actual, m/min)=	469	
Flow rate (Actual, Cubic m/min)=	2,786	
Flow rate (Standard, Wet, Cubic m/min)=	2,677	
Flow rate (Standard, Dry, Cubic m/min)=	2,620	

Particulate Loading - Front Half

		Corr. to 7% O2	& 12% CO2
Particulate Weight (g)=	0.0596		
Particulate Loading, Dry Std. (mg/cu m)=	76.1	2129.9	7606.7
Particulate Loading, Actual (mg/cu m)=	71.5		
Emission Rate (kg/hr)=	11.94		

No Back Half Analysis

FILE NAME - PARTMT13
RUN # - PARTICULATE/METALS RUN 13
LOCATION - DERAMUS FIELD STATION
DATE - 3/30/93
PROJECT # - 9712M-51-16

PROG.=VER 06/09/89
04-28-1993 16:26:21

Point #	Delta P (in. H20)	Delta H (in. H20)	Stack T (F)	Meter T In(F)	Meter T Out(F)
1	0.180	0.54	66	77	77
2	0.250	0.77	66	77	77
3	0.210	0.65	66	81	80
4	0.310	0.92	66	78	77
5	0.210	0.70	65	78	77
6	0.160	0.47	68	78	77
7	0.220	0.68	65	79	77
8	0.260	0.82	65	80	77
9	0.230	0.74	65	81	78
10	0.140	0.42	62	81	78
11	0.070	0.18	62	79	79
12	0.110	0.31	62	79	79
13	0.110	0.33	62	80	78
14	0.170	0.54	63	80	78
15	0.120	0.38	64	80	79
16	0.150	0.45	65	79	79
17	0.170	0.51	65	81	79
18	0.200	0.63	65	81	79
19	0.220	0.70	65	82	79
20	0.170	0.60	65	83	79
21	0.290	0.92	64	82	80
22	0.330	1.05	64	83	80
23	0.350	1.10	64	84	80
24	0.360	1.20	64	85	80
25	0.220	0.72	64	86	81

Fraction	Final Wt. (g)	Tare Wt. (g)	Blank Wt. (g)	Net Wt. (g)
DRY CATCH	0.0000	0.0000	0.0000	0.0000
FILTER	1.0933	1.0412	0.0000	0.0521

Fraction	Final Wt. (g)	Tare Wt. (g)	Vol. (ml)	Net Wt. (g)
PROBE RINSE	171.3112	171.3037	0.0	0.0075
IMPINGERS	0.0000	0.0000	0.0	0.0000

Probe Rinse Blank (mg/ml)= 0.0000
Impinger Blank (mg/ml)= 0.0000

FILE NAME - PARTMT14
RUN # - PARTICULATE/METALS RUN 14
LOCATION - DERAMUS FIELD STATION
DATE - 3/30/93
PROJECT # - 9712M-51-16

PROG.=VER 06/09/89
04-28-1993 16:27:39

Initial Meter Volume (Cubic Feet)=	300.458	
Final Meter Volume (Cubic Feet)=	329.370	
Meter Factor=	1.017	
Final Leak Rate (cu ft/min)=	0.006	
Net Meter Volume (Cubic Feet)=	29.403	
Gas Volume (Dry Standard Cubic Feet)=	27.633	
Barometric Pressure (in Hg)=	28.60	
Static Pressure (Inches H20)=	-0.55	
Percent Oxygen=	20.5	
Percent Carbon Dioxide=	0.0	
Moisture Collected (ml)=	19.8	
Percent Water=	2.0	**Saturated Stack**
Average Meter Temperature (F)=	78	
Average Delta H (in H20)=	0.70	
Average Delta P (in H20)=	0.198	
Average Stack Temperature (F)=	63	
Dry Molecular Weight=	28.82	
Wet Molecular Weight=	28.60	
Average Square Root of Delta P (in H20)=	0.4391	
% Isokinetic=	101.0	
Pitot Coefficient=	0.84	
Sampling Time (Minutes)=	62.5	
Nozzle Diameter (Inches)=	0.237	
Stack Axis #1 (Inches)=	96.0	
Stack Axis #2 (Inches)=	96.0	
Rectangular Stack		
Stack Area (Square Feet)=	64.00	
Stack Velocity (Actual, Feet/min)=	1,514	
Flow Rate (Actual, Cubic ft/min)=	96,901	
Flow rate (Standard, Wet, Cubic ft/min)=	93,336	
Flow Rate (Standard, Dry, Cubic ft/min)=	91,425	

Particulate Loading - Front Half

Particulate Weight (g)=	0.1178	Corr. to 7% O2 & 12% CO2
Particulate Loading, Dry Std. (gr/scf)=	0.0657	1.8384 6.5656
Particulate Loading, Actual (gr/cu ft)=	0.0619	
Emission Rate (lb/hr)=	51.44	

No Back Half Analysis

* * METRIC UNITS * *

FILE NAME - PARTMT14
RUN # - PARTICULATE/METALS RUN 14
LOCATION - DERAMUS FIELD STATION
DATE - 3/30/93
PROJECT # - 9712M-51-16

PROG.=VER 06/09/89
04-28-1993 16:27:39

Initial Meter Volume (Cubic Meters)=	8.508	
Final Meter Volume (Cubic Meters)=	9.326	
Meter Factor=	1.017	
Final Leak Rate (cu m/min)=	0.0002	
Net Meter Volume (Cubic Meters)=	0.833	
Gas Volume (Dry Standard Cubic Meters)=	0.782	
Barometric Pressure (mm Hg)=	726	
Static Pressure (mm H20)=	-14	
Percent Oxygen=	20.5	
Percent Carbon Dioxide=	0.0	
Moisture Collected (ml)=	19.8	
Percent Water=	2.0	**Saturated Stack**
Average Meter Temperature (C)=	25	
Average Delta H (mm H20)=	17.8	
Average Delta P (mm H20)=	5.0	
Average Stack Temperature (C)=	17	
Dry Molecular Weight=	28.82	
Wet Molecular Weight=	28.60	
Average Square Root of Delta P (mm H20)=	2.2129	
% Isokinetic=	101.0	
Pitot Coefficient=	0.84	
Sampling Time (Minutes)=	62.5	
Nozzle Diameter (mm)=	6.02	
Stack Axis #1 (Meters)=	2.438	
Stack Axis #2 (Meters)=	2.438	
Rectangular Stack		
Stack Area (Square Meters)=	5.946	
Stack Velocity (Actual, m/min)=	461	
Flow rate (Actual, Cubic m/min)=	2,744	
Flow rate (Standard, Wet, Cubic m/min)=	2,643	
Flow rate (Standard, Dry, Cubic m/min)=	2,589	

Particulate Loading - Front Half

Particulate Weight (g)=	0.1178	Corr. to 7% O2 & 12% CO2
Particulate Loading, Dry Std. (mg/cu m)=	150.6	4215.8 15056.4
Particulate Loading, Actual (mg/cu m)=	142.0	
Emission Rate (kg/hr)=	23.35	

No Back Half Analysis

FILE NAME - PARTMT14
RUN # - PARTICULATE/METALS RUN 14
LOCATION - DERAMUS FIELD STATION
DATE - 3/30/93
PROJECT # - 9712M-51-16

PROG.=VER 06/09/89
04-28-1993 16:27:40

Point #	Delta P (in. H20)	Delta H (in. H20)	Stack T (F)	Meter T In(F)	Meter T Out(F)
1	0.210	0.75	67	76	75
2	0.210	0.75	66	76	75
3	0.200	0.72	66	76	75
4	0.220	0.79	65	76	75
5	0.180	0.65	65	77	75
6	0.170	0.61	64	77	75
7	0.180	0.63	64	77	76
8	0.190	0.64	65	78	76
9	0.420	1.51	65	79	76
10	0.210	0.76	63	80	76
11	0.270	0.97	61	78	77
12	0.260	0.93	62	78	77
13	0.290	1.05	61	79	77
14	0.270	0.97	61	79	77
15	0.240	0.85	62	80	77
16	0.170	0.60	64	80	77
17	0.150	0.53	63	80	77
18	0.190	0.68	62	80	77
19	0.170	0.61	62	81	77
20	0.150	0.53	63	81	78
21	0.160	0.57	63	80	78
22	0.070	0.25	62	81	78
23	0.150	0.50	62	81	78
24	0.130	0.36	62	81	79
25	0.100	0.30	61	82	79

Fraction	Final Wt. (g)	Tare Wt. (g)	Blank Wt. (g)	Net Wt. (g)
DRY CATCH	0.0000	0.0000	0.0000	0.0000
FILTER	1.0604	1.0563	0.0000	0.0041

Fraction	Final Wt. (g)	Tare Wt. (g)	Vol. (ml)	Net Wt. (g)
PROBE RINSE	165.1074	164.9937	0.0	0.1137
IMPINGERS	0.0000	0.0000	0.0	0.0000

Probe Rinse Blank (mg/ml) = 0.0000
Impinger Blank (mg/ml) = 0.0000

FILE NAME - PARTMT15
RUN # - PARTICULATE/METALS RUN 15
LOCATION - DERAMUS FIELD STATION
DATE - 4/2/93
PROJECT # - 9712M-51-16

PROG.=VER 06/09/89
04-28-1993 16:28:50

Initial Meter Volume (Cubic Feet)=	425.600	
Final Meter Volume (Cubic Feet)=	453.462	
Meter Factor=	1.023	
Final Leak Rate (cu ft/min)=	0.003	
Net Meter Volume (Cubic Feet)=	28.503	
Gas Volume (Dry Standard Cubic Feet)=	27.663	
Barometric Pressure (in Hg)=	29.10	
Static Pressure (Inches H20)=	-0.13	
Percent Oxygen=	20.5	
Percent Carbon Dioxide=	0.0	
Moisture Collected (ml)=	8.3	
Percent Water=	0.8	**Saturated Stack**
Average Meter Temperature (F)=	70	
Average Delta H (in H20)=	0.62	
Average Delta P (in H20)=	0.020	
Average Stack Temperature (F)=	38	
Dry Molecular Weight=	28.82	
Wet Molecular Weight=	28.73	
Average Square Root of Delta P (in H20)=	0.1401	
% Isokinetic=	99.9	
Pitot Coefficient=	0.82	
Sampling Time (Minutes)=	62.5	
Nozzle Diameter (Inches)=	0.419	
Stack Axis #1 (Inches)=	96.0	
Stack Axis #2 (Inches)=	96.0	
Rectangular Stack		
Stack Area (Square Feet)=	64.00	
Stack Velocity (Actual, Feet/min)=	453	
Flow Rate (Actual, Cubic ft/min)=	28,969	
Flow rate (Standard, Wet, Cubic ft/min)=	29,861	
Flow Rate (Standard, Dry, Cubic ft/min)=	29,626	

Particulate Loading - Front Half

Particulate Weight (g)=	0.1560	Corr. to 7% O2 & 12% CO2
Particulate Loading, Dry Std. (gr/scf)=	0.0868	2.4317 8.6848
Particulate Loading, Actual (gr/cu ft)=	0.0888	
Emission Rate (lb/hr)=	22.05	

No Back Half Analysis

* * METRIC UNITS * *

FILE NAME - PARTMT15
RUN # - PARTICULATE/METALS RUN 15
LOCATION - DERAMUS FIELD STATION
DATE - 4/2/93
PROJECT # - 9712M-51-16

PROG.=VER 06/09/89
04-28-1993 16:28:50

Initial Meter Volume (Cubic Meters)=	12.051	
Final Meter Volume (Cubic Meters)=	12.840	
Meter Factor=	1.023	
Final Leak Rate (cu m/min)=	0.0001	
Net Meter Volume (Cubic Meters)=	0.807	
Gas Volume (Dry Standard Cubic Meters)=	0.783	
Barometric Pressure (mm Hg)=	739	
Static Pressure (mm H20)=	-3	
Percent Oxygen=	20.5	
Percent Carbon Dioxide=	0.0	
Moisture Collected (ml)=	8.3	
Percent Water=	0.8	**Saturated Stack**
Average Meter Temperature (C)=	21	
Average Delta H (mm H20)=	15.8	
Average Delta P (mm H20)=	0.5	
Average Stack Temperature (C)=	3	
Dry Molecular Weight=	28.82	
Wet Molecular Weight=	28.73	
Average Square Root of Delta P (mm H20)=	0.7063	
% Isokinetic=	99.9	
Pitot Coefficient=	0.82	
Sampling Time (Minutes)=	62.5	
Nozzle Diameter (mm)=	10.64	
Stack Axis #1 (Meters)=	2.438	
Stack Axis #2 (Meters)=	2.438	
Rectangular Stack		
Stack Area (Square Meters)=	5.946	
Stack Velocity (Actual, m/min)=	138	
Flow rate (Actual, Cubic m/min)=	820	
Flow rate (Standard, Wet, Cubic m/min)=	846	
Flow rate (Standard, Dry, Cubic m/min)=	839	

Particulate Loading - Front Half

Particulate Weight (g)=	0.1560	Corr. to 7% O2 & 12% CO2
Particulate Loading, Dry Std. (mg/cu m)=	199.2	5576.6 19916.3
Particulate Loading, Actual (mg/cu m)=	203.6	
Emission Rate (kg/hr)=	10.01	

No Back Half Analysis

FILE NAME - PARTMT15
RUN # - PARTICULATE/METALS RUN 15
LOCATION - DERAMUS FIELD STATION
DATE - 4/2/93
PROJECT # - 9712M-51-16

PROG.=VER 06/09/89
04-28-1993 16:28:51

Point #	Delta P (in. H20)	Delta H (in. H20)	Stack T (F)	Meter T In(F)	Meter T Out(F)
1	0.015	0.43	34	62	60
2	0.015	0.44	35	62	60
3	0.030	0.93	35	63	61
4	0.030	0.96	35	63	61
5	0.015	0.48	35	64	61
6	0.035	1.15	37	66	65
7	0.020	0.64	37	66	65
8	0.030	0.94	36	67	65
9	0.030	0.94	37	68	65
10	0.015	0.43	36	70	66
11	0.015	0.44	36	69	67
12	0.015	0.42	38	71	67
13	0.010	0.25	38	72	68
14	0.020	0.61	39	72	69
15	0.010	0.26	38	74	69
16	0.020	0.63	39	72	70
17	0.015	0.45	39	75	71
18	0.025	0.82	43	76	71
19	0.020	0.61	41	77	72
20	0.015	0.45	40	78	73
21	0.020	0.61	41	76	74
22	0.020	0.64	41	79	74
23	0.030	0.95	40	80	75
24	0.020	0.61	41	82	76
25	0.015	0.46	40	82	76

Fraction	Final Wt. (g)	Tare Wt. (g)	Blank Wt. (g)	Net Wt. (g)
DRY CATCH	0.0000	0.0000	0.0000	0.0000
FILTER	1.1608	1.0555	0.0000	0.1053

Fraction	Final Wt. (g)	Tare Wt. (g)	Vol. (ml)	Net Wt. (g)
PROBE RINSE	162.0554	162.0047	0.0	0.0507
IMPINGERS	0.0000	0.0000	0.0	0.0000

Probe Rinse Blank (mg/ml) = 0.0000
Impinger Blank (mg/ml) = 0.0000

FILE NAME - PARTMT16
RUN # - PARTICULATE/METALS RUN 16
LOCATION - DERAMUS FIELD STATION
DATE - 4/2/93
PROJECT # - 9712M-51-16

PROG.=VER 06/09/89
04-28-1993 16:29:47

Initial Meter Volume (Cubic Feet)=	332.098	
Final Meter Volume (Cubic Feet)=	360.562	
Meter Factor=	1.017	
Final Leak Rate (cu ft/min)=	0.003	
Net Meter Volume (Cubic Feet)=	28.948	
Gas Volume (Dry Standard Cubic Feet)=	28.003	
Barometric Pressure (in Hg)=	29.00	
Static Pressure (Inches H20)=	-0.13	
Percent Oxygen=	20.5	
Percent Carbon Dioxide=	0.0	
Moisture Collected (ml)=	5.5	
Percent Water=	0.8	**Saturated Stack**
Average Meter Temperature (F)=	70	
Average Delta H (in H20)=	0.69	
Average Delta P (in H20)=	0.020	
Average Stack Temperature (F)=	39	
Dry Molecular Weight=	28.82	
Wet Molecular Weight=	28.73	
Average Square Root of Delta P (in H20)=	0.1385	
% Isokinetic=	99.9	
Pitot Coefficient=	0.83	
Sampling Time (Minutes)=	62.5	
Nozzle Diameter (Inches)=	0.420	
Stack Axis #1 (Inches)=	96.0	
Stack Axis #2 (Inches)=	96.0	
Rectangular Stack		
Stack Area (Square Feet)=	64.00	
Stack Velocity (Actual, Feet/min)=	458	
Flow Rate (Actual, Cubic ft/min)=	29,330	
Flow rate (Standard, Wet, Cubic ft/min)=	30,087	
Flow Rate (Standard, Dry, Cubic ft/min)=	29,843	

Particulate Loading - Front Half

Particulate Weight (g)=	0.1069	Corr. to 7% O2 & 12% CO2
Particulate Loading, Dry Std. (gr/scf)=	0.0588	1.6461 5.8790
Particulate Loading, Actual (gr/cu ft)=	0.0598	
Emission Rate (lb/hr)=	15.04	

No Back Half Analysis

* * METRIC UNITS * *

FILE NAME - PARTMT16
RUN # - PARTICULATE/METALS RUN 16
LOCATION - DERAMUS FIELD STATION
DATE - 4/2/93
PROJECT # - 9712M-51-16

PROG.=VER 06/09/89
04-28-1993 16:29:48

Initial Meter Volume (Cubic Meters)=	9.404	
Final Meter Volume (Cubic Meters)=	10.210	
Meter Factor=	1.017	
Final Leak Rate (cu m/min)=	0.0001	
Net Meter Volume (Cubic Meters)=	0.820	
Gas Volume (Dry Standard Cubic Meters)=	0.793	
Barometric Pressure (mm Hg)=	737	
Static Pressure (mm H20)=	-3	
Percent Oxygen=	20.5	
Percent Carbon Dioxide=	0.0	
Moisture Collected (ml)=	5.5	
Percent Water=	0.8	**Saturated Stack**
Average Meter Temperature (C)=	21	
Average Delta H (mm H20)=	17.5	
Average Delta P (mm H20)=	0.5	
Average Stack Temperature (C)=	4	
Dry Molecular Weight=	28.82	
Wet Molecular Weight=	28.73	
Average Square Root of Delta P (mm H20)=	0.6979	
% Isokinetic=	99.9	
Pitot Coefficient=	0.83	
Sampling Time (Minutes)=	62.5	
Nozzle Diameter (mm)=	10.67	
Stack Axis #1 (Meters)=	2.438	
Stack Axis #2 (Meters)=	2.438	
Rectangular Stack		
Stack Area (Square Meters)=	5.946	
Stack Velocity (Actual, m/min)=	140	
Flow rate (Actual, Cubic m/min)=	831	
Flow rate (Standard, Wet, Cubic m/min)=	852	
Flow rate (Standard, Dry, Cubic m/min)=	845	

Particulate Loading - Front Half

		Corr. to 7% O2	& 12% CO2
Particulate Weight (g)=	0.1069		
Particulate Loading, Dry Std. (mg/cu m)=	134.8	3774.9	13481.9
Particulate Loading, Actual (mg/cu m)=	137.1		
Emission Rate (kg/hr)=	6.83		

No Back Half Analysis

FILE NAME - PARTMT16
RUN # - PARTICULATE/METALS RUN 16
LOCATION - DERAMUS FIELD STATION
DATE - 4/2/93
PROJECT # - 9712M-51-16

PROG.=VER 06/09/89
04-28-1993 16:29:48

Point #	Delta P (in. H20)	Delta H (in. H20)	Stack T (F)	Meter T In(F)	Meter T Out(F)
1	0.020	0.65	34	62	61
2	0.025	0.91	35	63	62
3	0.020	0.73	36	63	62
4	0.020	0.74	36	63	62
5	0.015	0.54	37	65	64
6	0.015	0.54	38	66	65
7	0.013	0.47	38	66	65
8	0.030	0.70	36	66	65
9	0.025	0.91	38	67	65
10	0.020	0.75	39	69	66
11	0.012	0.44	42	70	67
12	0.009	0.31	39	70	67
13	0.025	0.90	39	71	68
14	0.022	0.80	40	72	68
15	0.020	0.72	40	73	69
16	0.022	0.80	38	75	70
17	0.015	0.54	39	75	71
18	0.025	0.90	39	76	71
19	0.027	0.96	41	77	72
20	0.025	0.89	41	78	72
21	0.019	0.68	40	77	74
22	0.010	0.37	40	78	74
23	0.010	0.34	41	79	75
24	0.025	0.85	41	80	75
25	0.022	0.77	41	81	75

Fraction	Final Wt. (g)	Tare Wt. (g)	Blank Wt. (g)	Net Wt. (g)
DRY CATCH	0.0000	0.0000	0.0000	0.0000
FILTER	1.1242	1.0579	0.0000	0.0663

Fraction	Final Wt. (g)	Tare Wt. (g)	Vol. (ml)	Net Wt. (g)
PROBE RINSE	165.3726	165.3320	0.0	0.0406
IMPINGERS	0.0000	0.0000	0.0	0.0000

Probe Rinse Blank (mg/ml)= 0.0000
Impinger Blank (mg/ml)= 0.0000

FILE NAME - PARTMT17
RUN # - PARTICULATE/METALS RUN NO. 17
LOCATION - DERAMUS FIELD STATION
DATE - 4/2/93
PROJECT # - 9712-51-16

PROG.=VER 06/09/89
04-28-1993 16:30:50

Initial Meter Volume (Cubic Feet)=	453.934
Final Meter Volume (Cubic Feet)=	488.887
Meter Factor=	1.023
Final Leak Rate (cu ft/min)=	0.005
Net Meter Volume (Cubic Feet)=	35.757
Gas Volume (Dry Standard Cubic Feet)=	34.024
Barometric Pressure (in Hg)=	29.03
Static Pressure (Inches H20)=	-0.13
Percent Oxygen=	20.5
Percent Carbon Dioxide=	0.0
Moisture Collected (ml)=	1.7
Percent Water=	0.2
Average Meter Temperature (F)=	80
Average Delta H (in H20)=	0.98
Average Delta P (in H20)=	0.015
Average Stack Temperature (F)=	47
Dry Molecular Weight=	28.82
Wet Molecular Weight=	28.79
Average Square Root of Delta P (in H20)=	0.1223
% Isokinetic=	99.4
Pitot Coefficient=	0.82
Sampling Time (Minutes)=	62.5
Nozzle Diameter (Inches)=	0.500
Stack Axis #1 (Inches)=	96.0
Stack Axis #2 (Inches)=	96.0
Rectangular Stack	
Stack Area (Square Feet)=	64.00
Stack Velocity (Actual, Feet/min)=	399
Flow Rate (Actual, Cubic ft/min)=	25,513
Flow rate (Standard, Wet, Cubic ft/min)=	25,777
Flow Rate (Standard, Dry, Cubic ft/min)=	25,717

Particulate Loading - Front Half

Particulate Weight (g)=	0.1098	Corr. to 7% O2 & 12% CO2
Particulate Loading, Dry Std. (gr/scf)=	0.0497	1.3916 4.9700
Particulate Loading, Actual (gr/cu ft)=	0.0501	
Emission Rate (lb/hr)=	10.95	

No Back Half Analysis

* * METRIC UNITS * *

FILE NAME - PARTMT17
RUN # - PARTICULATE/METALS RUN NO. 17
LOCATION - DERAMUS FIELD STATION
DATE - 4/2/93
PROJECT # - 9712-51-16

PROG.=VER 06/09/89
04-28-1993 16:30:50

Initial Meter Volume (Cubic Meters)=	12.854
Final Meter Volume (Cubic Meters)=	13.843
Meter Factor=	1.023
Final Leak Rate (cu m/min)=	0.0001
Net Meter Volume (Cubic Meters)=	1.012
Gas Volume (Dry Standard Cubic Meters)=	0.963
Barometric Pressure (mm Hg)=	737
Static Pressure (mm H20)=	-3
Percent Oxygen=	20.5
Percent Carbon Dioxide=	0.0
Moisture Collected (ml)=	1.7
Percent Water=	0.2
Average Meter Temperature (C)=	26
Average Delta H (mm H20)=	24.8
Average Delta P (mm H20)=	0.4
Average Stack Temperature (C)=	8
Dry Molecular Weight=	28.82
Wet Molecular Weight=	28.79
Average Square Root of Delta P (mm H20)=	0.6165
% Isokinetic=	99.4
Pitot Coefficient=	0.82
Sampling Time (Minutes)=	62.5
Nozzle Diameter (mm)=	12.70
Stack Axis #1 (Meters)=	2.438
Stack Axis #2 (Meters)=	2.438
Rectangular Stack	
Stack Area (Square Meters)=	5.946
Stack Velocity (Actual, m/min)=	122
Flow rate (Actual, Cubic m/min)=	722
Flow rate (Standard, Wet, Cubic m/min)=	730
Flow rate (Standard, Dry, Cubic m/min)=	728

Particulate Loading - Front Half

		Corr. to 7% O2	& 12% CO2
Particulate Weight (g)=	0.1098		
Particulate Loading, Dry Std. (mg/cu m)=	114.0	3191.3	11397.4
Particulate Loading, Actual (mg/cu m)=	114.8		
Emission Rate (kg/hr)=	4.97		

No Back Half Analysis

FILE NAME - PARTMT17
RUN # - PARTICULATE/METALS RUN NO. 17
LOCATION - DERAMUS FIELD STATION
DATE - 4/2/93
PROJECT # - 9712-51-16

PROG.=VER 06/09/89
04-28-1993 16:30:51

Point #	Delta P (in. H20)	Delta H (in. H20)	Stack T (F)	Meter T In(F)	Meter T Out(F)
1	0.015	0.94	46	78	78
2	0.020	1.30	47	78	78
3	0.025	1.63	46	78	78
4	0.020	1.30	46	79	78
5	0.015	0.90	47	80	78
6	0.025	1.64	45	79	78
7	0.015	0.90	46	80	78
8	0.025	1.60	46	80	78
9	0.015	0.90	46	81	78
10	0.010	0.57	47	82	78
11	0.005	0.30	46	79	78
12	0.015	0.93	47	80	78
13	0.010	0.63	46	81	78
14	0.015	0.94	46	81	78
15	0.015	0.97	46	82	78
16	0.015	0.95	48	79	78
17	0.010	0.64	48	81	78
18	0.015	0.93	50	82	78
19	0.010	0.63	48	82	78
20	0.010	0.63	47	83	78
21	0.015	0.93	48	80	78
22	0.010	0.62	47	82	79
23	0.020	1.30	49	83	79
24	0.020	1.40	47	84	80
25	0.015	0.93	47	86	79

Fraction	Final Wt. (g)	Tare Wt. (g)	Blank Wt. (g)	Net Wt. (g)
DRY CATCH	0.0000	0.0000	0.0000	0.0000
FILTER	1.1059	1.0421	0.0000	0.0638

Fraction	Final Wt. (g)	Tare Wt. (g)	Vol. (ml)	Net Wt. (g)
PROBE RINSE	164.8273	164.7813	0.0	0.0460
IMPINGERS	0.0000	0.0000	0.0	0.0000

Probe Rinse Blank (mg/ml)= 0.0000
Impinger Blank (mg/ml)= 0.0000

FILE NAME - PARTMT18
RUN # - PARTICULATE/METALS RUN NO. 18
LOCATION - DERAMUS FIELD STATION
DATE - 4/2/93
PROJECT # - 9712M-51-16

PROG.=VER 06/09/89
04-28-1993 16:31:53

Initial Meter Volume (Cubic Feet)=	361.022
Final Meter Volume (Cubic Feet)=	392.892
Meter Factor=	1.017
Final Leak Rate (cu ft/min)=	0.005
Net Meter Volume (Cubic Feet)=	32.412
Gas Volume (Dry Standard Cubic Feet)=	30.815
Barometric Pressure (in Hg)=	29.02
Static Pressure (Inches H20)=	-0.13
Percent Oxygen=	20.5
Percent Carbon Dioxide=	0.0
Moisture Collected (ml)=	4.7
Percent Water=	0.7
Average Meter Temperature (F)=	80
Average Delta H (in H20)=	0.87
Average Delta P (in H20)=	0.012
Average Stack Temperature (F)=	47
Dry Molecular Weight=	28.82
Wet Molecular Weight=	28.74
Average Square Root of Delta P (in H20)=	0.1080
% Isokinetic=	100.2
Pitot Coefficient=	0.83
Sampling Time (Minutes)=	62.5
Nozzle Diameter (Inches)=	0.500
Stack Axis #1 (Inches)=	96.0
Stack Axis #2 (Inches)=	96.0
Rectangular Stack	
Stack Area (Square Feet)=	64.00
Stack Velocity (Actual, Feet/min)=	360
Flow Rate (Actual, Cubic ft/min)=	23,047
Flow rate (Standard, Wet, Cubic ft/min)=	23,267
Flow Rate (Standard, Dry, Cubic ft/min)=	23,101

Particulate Loading - Front Half

		Corr. to 7% O2	& 12% CO2
Particulate Weight (g)=	0.1146		
Particulate Loading, Dry Std. (gr/scf)=	0.0573	1.6036	5.7272
Particulate Loading, Actual (gr/cu ft)=	0.0574		
Emission Rate (lb/hr)=	11.34		

No Back Half Analysis

* * METRIC UNITS * *

FILE NAME - PARTMT18
RUN # - PARTICULATE/METALS RUN NO. 18
LOCATION - DERAMUS FIELD STATION
DATE - 4/2/93
PROJECT # - 9712M-51-16

PROG.=VER 06/09/89
04-28-1993 16:31:53

Initial Meter Volume (Cubic Meters)=	10.223
Final Meter Volume (Cubic Meters)=	11.125
Meter Factor=	1.017
Final Leak Rate (cu m/min)=	0.0001
Net Meter Volume (Cubic Meters)=	0.918
Gas Volume (Dry Standard Cubic Meters)=	0.873
Barometric Pressure (mm Hg)=	737
Static Pressure (mm H20)=	-3
Percent Oxygen=	20.5
Percent Carbon Dioxide=	0.0
Moisture Collected (ml)=	4.7
Percent Water=	0.7
Average Meter Temperature (C)=	26
Average Delta H (mm H20)=	22.1
Average Delta P (mm H20)=	0.3
Average Stack Temperature (C)=	8
Dry Molecular Weight=	28.82
Wet Molecular Weight=	28.74
Average Square Root of Delta P (mm H20)=	0.5441
% Isokinetic=	100.2
Pitot Coefficient=	0.83
Sampling Time (Minutes)=	62.5
Nozzle Diameter (mm)=	12.70
Stack Axis #1 (Meters)=	2.438
Stack Axis #2 (Meters)=	2.438
Rectangular Stack	
Stack Area (Square Meters)=	5.946
Stack Velocity (Actual, m/min)=	110
Flow rate (Actual, Cubic m/min)=	653
Flow rate (Standard, Wet, Cubic m/min)=	659
Flow rate (Standard, Dry, Cubic m/min)=	654

Particulate Loading - Front Half

		Corr. to 7% O2	& 12% CO2
Particulate Weight (g)=	0.1146		
Particulate Loading, Dry Std. (mg/cu m)=	131.3	3677.4	13133.7
Particulate Loading, Actual (mg/cu m)=	131.6		
Emission Rate (kg/hr)=	5.15		

No Back Half Analysis

FILE NAME - PARTMT18
RUN # - PARTICULATE/METALS RUN NO. 18
LOCATION - DERAMUS FIELD STATION
DATE - 4/2/93
PROJECT # - 9712M-51-16

PROG.=VER 06/09/89
04-28-1993 16:31:54

Point #	Delta P (in. H20)	Delta H (in. H20)	Stack T (F)	Meter T In(F)	Meter T Out(F)
1	0.010	0.73	47	79	78
2	0.005	0.30	47	78	78
3	0.015	1.00	46	78	78
4	0.015	0.97	48	78	78
5	0.005	0.35	47	79	78
6	0.010	0.70	46	78	77
7	0.015	1.10	47	79	78
8	0.015	1.10	47	79	78
9	0.015	1.08	47	80	78
10	0.013	0.95	47	81	78
11	0.005	0.35	47	79	78
12	0.015	1.10	47	80	78
13	0.025	1.90	47	81	78
14	0.015	1.10	48	83	78
15	0.014	1.03	48	83	78
16	0.005	0.35	47	84	79
17	0.015	1.10	47	81	78
18	0.020	1.45	47	82	78
19	0.010	0.70	47	84	78
20	0.014	0.98	48	84	79
21	0.015	1.05	49	82	79
22	0.005	0.34	47	83	79
23	0.010	0.65	47	83	79
24	0.015	1.00	46	83	79
25	0.005	0.34	47	84	79

Fraction	Final Wt. (g)	Tare Wt. (g)	Blank Wt. (g)	Net Wt. (g)
DRY CATCH	0.0000	0.0000	0.0000	0.0000
FILTER	1.1463	1.0559	0.0000	0.0904

Fraction	Final Wt. (g)	Tare Wt. (g)	Vol. (ml)	Net Wt. (g)
PROBE RINSE	160.5832	160.5590	0.0	0.0242
IMPINGERS	0.0000	0.0000	0.0	0.0000

Probe Rinse Blank (mg/ml)= 0.0000
Impinger Blank (mg/ml)= 0.0000

FILE NAME - PARTMT19
RUN # - PARTICULATE/METALS RUN NO. 19
LOCATION - DERAMUS FIELD STATION
DATE - 4/5/93
PROJECT # - 9712-51-16

PROG.=VER 06/09/89
04-28-1993 16:32:48

Initial Meter Volume (Cubic Feet)=	489.166	
Final Meter Volume (Cubic Feet)=	531.831	
Meter Factor=	1.023	
Final Leak Rate (cu ft/min)=	0.005	
Net Meter Volume (Cubic Feet)=	43.646	
Gas Volume (Dry Standard Cubic Feet)=	42.764	
Barometric Pressure (in Hg)=	29.80	
Static Pressure (Inches H20)=	-0.13	
Percent Oxygen=	20.5	
Percent Carbon Dioxide=	0.0	
Moisture Collected (ml)=	9.9	
Percent Water=	0.9	**Saturated Stack**
Average Meter Temperature (F)=	79	
Average Delta H (in H20)=	1.50	
Average Delta P (in H20)=	0.024	
Average Stack Temperature (F)=	43	
Dry Molecular Weight=	28.82	
Wet Molecular Weight=	28.72	
Average Square Root of Delta P (in H20)=	0.1539	
% Isokinetic=	100.2	
Pitot Coefficient=	0.82	
Sampling Time (Minutes)=	62.5	
Nozzle Diameter (Inches)=	0.495	
Stack Axis #1 (Inches)=	96.0	
Stack Axis #2 (Inches)=	96.0	
Rectangular Stack		
Stack Area (Square Feet)=	64.00	
Stack Velocity (Actual, Feet/min)=	494	
Flow Rate (Actual, Cubic ft/min)=	31,616	
Flow rate (Standard, Wet, Cubic ft/min)=	33,018	
Flow Rate (Standard, Dry, Cubic ft/min)=	32,705	

Particulate Loading - Front Half

Particulate Weight (g)=	0.1660	Corr. to 7% O2 & 12% CO2
Particulate Loading, Dry Std. (gr/scf)=	0.0598	1.6738 5.9779
Particulate Loading, Actual (gr/cu ft)=	0.0618	
Emission Rate (lb/hr)=	16.75	

No Back Half Analysis

* * METRIC UNITS * *

FILE NAME - PARTMT19
RUN # - PARTICULATE/METALS RUN NO. 19
LOCATION - DERAMUS FIELD STATION
DATE - 4/5/93
PROJECT # - 9712-51-16

PROG.=VER 06/09/89
04-28-1993 16:32:48

Initial Meter Volume (Cubic Meters)=	13.851	
Final Meter Volume (Cubic Meters)=	15.059	
Meter Factor=	1.023	
Final Leak Rate (cu m/min)=	0.0001	
Net Meter Volume (Cubic Meters)=	1.236	
Gas Volume (Dry Standard Cubic Meters)=	1.211	
Barometric Pressure (mm Hg)=	757	
Static Pressure (mm H20)=	-3	
Percent Oxygen=	20.5	
Percent Carbon Dioxide=	0.0	
Moisture Collected (ml)=	9.9	
Percent Water=	0.9	**Saturated Stack**
Average Meter Temperature (C)=	26	
Average Delta H (mm H20)=	38.0	
Average Delta P (mm H20)=	0.6	
Average Stack Temperature (C)=	6	
Dry Molecular Weight=	28.82	
Wet Molecular Weight=	28.72	
Average Square Root of Delta P (mm H20)=	0.7756	
% Isokinetic=	100.2	
Pitot Coefficient=	0.82	
Sampling Time (Minutes)=	62.5	
Nozzle Diameter (mm)=	12.57	
Stack Axis #1 (Meters)=	2.438	
Stack Axis #2 (Meters)=	2.438	
Rectangular Stack		
Stack Area (Square Meters)=	5.946	
Stack Velocity (Actual, m/min)=	151	
Flow rate (Actual, Cubic m/min)=	895	
Flow rate (Standard, Wet, Cubic m/min)=	935	
Flow rate (Standard, Dry, Cubic m/min)=	926	

Particulate Loading - Front Half

Particulate Weight (g)=	0.1660	Corr. to 7% O2 & 12% CO2
Particulate Loading, Dry Std. (mg/cu m)=	137.1	3838.4 13708.6
Particulate Loading, Actual (mg/cu m)=	141.8	
Emission Rate (kg/hr)=	7.61	

No Back Half Analysis

FILE NAME - PARTMT19
RUN # - PARTICULATE/METALS RUN NO. 19
LOCATION - DERAMUS FIELD STATION
DATE - 4/5/93
PROJECT # - 9712-51-16

PROG.=VER 06/09/89
04-28-1993 16:32:49

Point #	Delta P (in. H20)	Delta H (in. H20)	Stack T (F)	Meter T In(F)	Meter T Out(F)
1	0.025	1.38	40	72	71
2	0.030	1.80	41	72	71
3	0.030	1.90	41	73	71
4	0.025	1.60	41	76	72
5	0.025	1.60	41	77	72
6	0.040	2.60	41	75	73
7	0.025	1.60	43	78	73
8	0.035	2.25	43	79	73
9	0.025	1.60	43	81	74
10	0.020	1.25	43	82	74
11	0.020	1.25	43	78	75
12	0.020	1.25	43	81	76
13	0.025	1.60	43	82	76
14	0.030	1.90	43	83	76
15	0.015	0.91	43	85	77
16	0.020	1.20	45	81	78
17	0.015	0.91	46	84	78
18	0.020	1.20	45	85	78
19	0.020	1.20	46	86	79
20	0.025	1.60	45	87	80
21	0.020	1.25	45	83	80
22	0.020	1.25	46	85	80
23	0.025	1.60	45	86	81
24	0.025	1.50	45	87	80
25	0.020	1.20	45	88	81

Fraction	Final Wt. (g)	Tare Wt. (g)	Blank Wt. (g)	Net Wt. (g)
DRY CATCH	0.0000	0.0000	0.0000	0.0000
FILTER	1.1901	1.0561	0.0000	0.1340

Fraction	Final Wt. (g)	Tare Wt. (g)	Vol. (ml)	Net Wt. (g)
PROBE RINSE	166.3026	166.2706	0.0	0.0320
IMPINGERS	0.0000	0.0000	0.0	0.0000

Probe Rinse Blank (mg/ml)= 0.0000
Impinger Blank (mg/ml)= 0.0000

FILE NAME - PARTMT20
RUN # - PARTICULATE/METALS RUN NO. 20
LOCATION - DERAMUS FIELD STATION
DATE - 4/5/93
PROJECT # - 9712-51-16

PROG.=VER 06/09/89
04-28-1993 16:33:52

Initial Meter Volume (Cubic Feet)=	393.364
Final Meter Volume (Cubic Feet)=	434.183
Meter Factor=	1.017
Final Leak Rate (cu ft/min)=	0.005
Net Meter Volume (Cubic Feet)=	41.513
Gas Volume (Dry Standard Cubic Feet)=	40.575
Barometric Pressure (in Hg)=	29.80
Static Pressure (Inches H20)=	-0.13
Percent Oxygen=	20.5
Percent Carbon Dioxide=	0.0
Moisture Collected (ml)=	3.8
Percent Water=	0.4
Average Meter Temperature (F)=	80
Average Delta H (in H20)=	1.37
Average Delta P (in H20)=	0.021
Average Stack Temperature (F)=	46
Dry Molecular Weight=	28.82
Wet Molecular Weight=	28.77
Average Square Root of Delta P (in H20)=	0.1434
% Isokinetic=	99.7
Pitot Coefficient=	0.83
Sampling Time (Minutes)=	62.5
Nozzle Diameter (Inches)=	0.495
Stack Axis #1 (Inches)=	96.0
Stack Axis #2 (Inches)=	96.0
Rectangular Stack	
Stack Area (Square Feet)=	64.00
Stack Velocity (Actual, Feet/min)=	471
Flow Rate (Actual, Cubic ft/min)=	30,156
Flow rate (Standard, Wet, Cubic ft/min)=	31,334
Flow Rate (Standard, Dry, Cubic ft/min)=	31,196

Particulate Loading - Front Half

		Corr. to 7% O2	& 12% CO2
Particulate Weight (g)=	0.1668		
Particulate Loading, Dry Std. (gr/scf)=	0.0633	1.7727	6.3311
Particulate Loading, Actual (gr/cu ft)=	0.0655		
Emission Rate (lb/hr)=	16.93		

No Back Half Analysis

* * METRIC UNITS * *

FILE NAME - PARTMT20 PROG.=VER 06/09/89
RUN # - PARTICULATE/METALS RUN NO. 20 04-28-1993 16:33:52
LOCATION - DERAMUS FIELD STATION
DATE - 4/5/93
PROJECT # - 9712-51-16

Initial Meter Volume (Cubic Meters)=	11.138
Final Meter Volume (Cubic Meters)=	12.294
Meter Factor=	1.017
Final Leak Rate (cu m/min)=	0.0001
Net Meter Volume (Cubic Meters)=	1.175
Gas Volume (Dry Standard Cubic Meters)=	1.149
Barometric Pressure (mm Hg)=	757
Static Pressure (mm H20)=	-3
Percent Oxygen=	20.5
Percent Carbon Dioxide=	0.0
Moisture Collected (ml)=	3.8
Percent Water=	0.4
Average Meter Temperature (C)=	26
Average Delta H (mm H20)=	34.7
Average Delta P (mm H20)=	0.5
Average Stack Temperature (C)=	8
Dry Molecular Weight=	28.82
Wet Molecular Weight=	28.77
Average Square Root of Delta P (mm H20)=	0.7227
% Isokinetic=	99.7
Pitot Coefficient=	0.83
Sampling Time (Minutes)=	62.5
Nozzle Diameter (mm)=	12.57
Stack Axis #1 (Meters)=	2.438
Stack Axis #2 (Meters)=	2.438
Rectangular Stack	
Stack Area (Square Meters)=	5.946
Stack Velocity (Actual, m/min)=	144
Flow rate (Actual, Cubic m/min)=	854
Flow rate (Standard, Wet, Cubic m/min)=	887
Flow rate (Standard, Dry, Cubic m/min)=	883

Particulate Loading - Front Half

		Corr. to 7% O2	& 12% CO2
Particulate Weight (g)=	0.1668		
Particulate Loading, Dry Std. (mg/cu m)=	145.2	4065.3	14518.8
Particulate Loading, Actual (mg/cu m)=	150.1		
Emission Rate (kg/hr)=	7.68		

No Back Half Analysis

FILE NAME - PARTMT20
RUN # - PARTICULATE/METALS RUN NO. 20
LOCATION - DERAMUS FIELD STATION
DATE - 4/5/93
PROJECT # - 9712-51-16

PROG.=VER 06/09/89
04-28-1993 16:33:53

Point #	Delta P (in. H20)	Delta H (in. H20)	Stack T (F)	Meter T In(F)	Meter T Out(F)
1	0.014	0.98	41	73	72
2	0.024	1.68	43	74	72
3	0.019	1.30	43	74	73
4	0.016	1.05	44	75	73
5	0.020	1.30	45	76	73
6	0.018	1.20	46	78	74
7	0.017	1.00	45	78	74
8	0.026	1.70	45	79	75
9	0.029	1.90	46	80	75
10	0.028	1.85	47	82	76
11	0.018	1.20	47	84	77
12	0.022	1.45	46	82	77
13	0.028	1.80	47	83	77
14	0.025	1.77	47	84	78
15	0.022	1.50	47	86	78
16	0.027	1.85	47	85	79
17	0.019	1.20	48	87	79
18	0.020	1.20	47	86	80
19	0.025	1.20	47	87	80
20	0.024	1.50	48	88	81
21	0.019	1.35	48	89	81
22	0.012	0.85	46	85	81
23	0.020	1.40	46	86	81
24	0.014	0.96	46	86	81
25	0.015	0.96	47	87	81

Fraction	Final Wt. (g)	Tare Wt. (g)	Blank Wt. (g)	Net Wt. (g)
DRY CATCH	0.0000	0.0000	0.0000	0.0000
FILTER	1.1890	1.0492	0.0000	0.1398

Fraction	Final Wt. (g)	Tare Wt. (g)	Vol. (ml)	Net Wt. (g)
PROBE RINSE	160.8827	160.8557	0.0	0.0270
IMPINGERS	0.0000	0.0000	0.0	0.0000

Probe Rinse Blank (mg/ml)= 0.0000
Impinger Blank (mg/ml)= 0.0000

FILE NAME - PARTMT21
RUN # - PARTICULATE/METALS RUN NO. 21
LOCATION - DERAMUS FIELD STATION
DATE - 4/5/93
PROJECT # - 9712M-51-16

PROG.=VER 06/09/89
04-28-1993 16:34:51

Initial Meter Volume (Cubic Feet)=	532.311
Final Meter Volume (Cubic Feet)=	558.762
Meter Factor=	1.023
Final Leak Rate (cu ft/min)=	0.001
Net Meter Volume (Cubic Feet)=	27.059
Gas Volume (Dry Standard Cubic Feet)=	26.040
Barometric Pressure (in Hg)=	29.30
Static Pressure (Inches H20)=	-1.20
Percent Oxygen=	20.5
Percent Carbon Dioxide=	0.0
Moisture Collected (ml)=	5.4
Percent Water=	1.0
Average Meter Temperature (F)=	78
Average Delta H (in H20)=	0.54
Average Delta P (in H20)=	0.182
Average Stack Temperature (F)=	51
Dry Molecular Weight=	28.82
Wet Molecular Weight=	28.72
Average Square Root of Delta P (in H20)=	0.4207
% Isokinetic=	100.0
Pitot Coefficient=	0.82
Sampling Time (Minutes)=	62.5
Nozzle Diameter (Inches)=	0.236
Stack Axis #1 (Inches)=	96.0
Stack Axis #2 (Inches)=	96.0
Rectangular Stack	
Stack Area (Square Feet)=	64.00
Stack Velocity (Actual, Feet/min)=	1,374
Flow Rate (Actual, Cubic ft/min)=	87,958
Flow rate (Standard, Wet, Cubic ft/min)=	88,677
Flow Rate (Standard, Dry, Cubic ft/min)=	87,820

Particulate Loading - Front Half

		Corr. to 7% O2	& 12% CO2
Particulate Weight (g)=	0.1022		
Particulate Loading, Dry Std. (gr/scf)=	0.0604	1.6924	6.0444
Particulate Loading, Actual (gr/cu ft)=	0.0603		
Emission Rate (lb/hr)=	45.49		

No Back Half Analysis

* * METRIC UNITS * *

FILE NAME - PARTMT21
RUN # - PARTICULATE/METALS RUN NO. 21
LOCATION - DERAMUS FIELD STATION
DATE - 4/5/93
PROJECT # - 9712M-51-16

PROG.=VER 06/09/89
04-28-1993 16:34:51

Initial Meter Volume (Cubic Meters)=	15.073
Final Meter Volume (Cubic Meters)=	15.822
Meter Factor=	1.023
Final Leak Rate (cu m/min)=	0.0000
Net Meter Volume (Cubic Meters)=	0.766
Gas Volume (Dry Standard Cubic Meters)=	0.737
Barometric Pressure (mm Hg)=	744
Static Pressure (mm H20)=	-30
Percent Oxygen=	20.5
Percent Carbon Dioxide=	0.0
Moisture Collected (ml)=	5.4
Percent Water=	1.0
Average Meter Temperature (C)=	25
Average Delta H (mm H20)=	13.7
Average Delta P (mm H20)=	4.6
Average Stack Temperature (C)=	11
Dry Molecular Weight=	28.82
Wet Molecular Weight=	28.72
Average Square Root of Delta P (mm H20)=	2.1201
% Isokinetic=	100.0
Pitot Coefficient=	0.82
Sampling Time (Minutes)=	62.5
Nozzle Diameter (mm)=	5.99
Stack Axis #1 (Meters)=	2.438
Stack Axis #2 (Meters)=	2.438
Rectangular Stack	
Stack Area (Square Meters)=	5.946
Stack Velocity (Actual, m/min)=	419
Flow rate (Actual, Cubic m/min)=	2,491
Flow rate (Standard, Wet, Cubic m/min)=	2,511
Flow rate (Standard, Dry, Cubic m/min)=	2,487

Particulate Loading - Front Half

		Corr. to 7% O2	& 12% CO2
Particulate Weight (g)=	0.1022		
Particulate Loading, Dry Std. (mg/cu m)=	138.6	3881.2	13861.3
Particulate Loading, Actual (mg/cu m)=	138.3		
Emission Rate (kg/hr)=	20.65		

No Back Half Analysis

FILE NAME - PARTMT21
RUN # - PARTICULATE/METALS RUN NO. 21
LOCATION - DERAMUS FIELD STATION
DATE - 4/5/93
PROJECT # - 9712M-51-16

PROG.=VER 06/09/89
04-28-1993 16:34:51

Point #	Delta P (in. H20)	Delta H (in. H20)	Stack T (F)	Meter T In(F)	Meter T Out(F)
1	0.200	0.62	51	78	78
2	0.250	0.78	50	77	77
3	0.210	0.62	48	76	77
4	0.270	0.82	50	77	77
5	0.150	0.43	51	77	77
6	0.150	0.42	51	77	76
7	0.220	0.63	50	77	76
8	0.210	0.63	51	77	76
9	0.220	0.63	50	77	76
10	0.120	0.33	50	78	76
11	0.100	0.22	52	79	76
12	0.120	0.33	52	78	77
13	0.230	0.74	51	79	77
14	0.130	0.40	50	79	77
15	0.070	0.19	53	80	77
16	0.190	0.57	52	80	77
17	0.160	0.47	51	79	77
18	0.200	0.61	52	80	77
19	0.150	0.44	51	80	77
20	0.100	0.26	52	80	78
21	0.170	0.50	53	78	78
22	0.230	0.73	54	79	78
23	0.290	0.94	51	80	78
24	0.280	0.88	54	81	78
25	0.130	0.34	53	82	78

Fraction	Final Wt. (g)	Tare Wt. (g)	Blank Wt. (g)	Net Wt. (g)
DRY CATCH	0.0000	0.0000	0.0000	0.0000
FILTER	1.1116	1.0489	0.0000	0.0627

Fraction	Final Wt. (g)	Tare Wt. (g)	Vol. (ml)	Net Wt. (g)
PROBE RINSE	167.7959	167.7564	0.0	0.0395
IMPINGERS	0.0000	0.0000	0.0	0.0000

Probe Rinse Blank (mg/ml)= 0.0000
Impinger Blank (mg/ml)= 0.0000

FILE NAME - PARTMT22
RUN # - PARTICULATE/METALS RUN NO. 22
LOCATION - DERAMUS FIELD STATION
DATE - 4/5/93
PROJECT # - 9712M-51-16

PROG.=VER 06/09/89
04-28-1993 16:36:05

Initial Meter Volume (Cubic Feet)=	434.572	
Final Meter Volume (Cubic Feet)=	461.492	
Meter Factor=	1.017	
Final Leak Rate (cu ft/min)=	0.002	
Net Meter Volume (Cubic Feet)=	27.378	
Gas Volume (Dry Standard Cubic Feet)=	26.423	
Barometric Pressure (in Hg)=	29.30	
Static Pressure (Inches H20)=	-1.20	
Percent Oxygen=	20.5	
Percent Carbon Dioxide=	0.0	
Moisture Collected (ml)=	8.5	
Percent Water=	1.4	**Saturated Stack**
Average Meter Temperature (F)=	76	
Average Delta H (in H20)=	0.63	
Average Delta P (in H20)=	0.186	
Average Stack Temperature (F)=	53	
Dry Molecular Weight=	28.82	
Wet Molecular Weight=	28.67	
Average Square Root of Delta P (in H20)=	0.4244	
% Isokinetic=	99.6	
Pitot Coefficient=	0.83	
Sampling Time (Minutes)=	62.5	
Nozzle Diameter (Inches)=	0.235	
Stack Axis #1 (Inches)=	96.0	
Stack Axis #2 (Inches)=	96.0	
Rectangular Stack		
Stack Area (Square Feet)=	64.00	
Stack Velocity (Actual, Feet/min)=	1,420	
Flow Rate (Actual, Cubic ft/min)=	90,875	
Flow rate (Standard, Wet, Cubic ft/min)=	91,403	
Flow Rate (Standard, Dry, Cubic ft/min)=	90,160	

Particulate Loading - Front Half

		Corr. to 7% O2	& 12% CO2
Particulate Weight (g)=	0.1333		
Particulate Loading, Dry Std. (gr/scf)=	0.0777	2.1753	7.7688
Particulate Loading, Actual (gr/cu ft)=	0.0770		
Emission Rate (lb/hr)=	60.03		

No Back Half Analysis

* * METRIC UNITS * *

FILE NAME - PARTMT22 PROG.=VER 06/09/89
RUN # - PARTICULATE/METALS RUN NO. 22 04-28-1993 16:36:06
LOCATION - DERAMUS FIELD STATION
DATE - 4/5/93
PROJECT # - 9712M-51-16

Initial Meter Volume (Cubic Meters)=	12.305	
Final Meter Volume (Cubic Meters)=	13.068	
Meter Factor=	1.017	
Final Leak Rate (cu m/min)=	0.0001	
Net Meter Volume (Cubic Meters)=	0.775	
Gas Volume (Dry Standard Cubic Meters)=	0.748	
Barometric Pressure (mm Hg)=	744	
Static Pressure (mm H20)=	-30	
Percent Oxygen=	20.5	
Percent Carbon Dioxide=	0.0	
Moisture Collected (ml)=	8.5	
Percent Water=	1.4	**Saturated Stack**
Average Meter Temperature (C)=	25	
Average Delta H (mm H20)=	15.9	
Average Delta P (mm H20)=	4.7	
Average Stack Temperature (C)=	11	
Dry Molecular Weight=	28.82	
Wet Molecular Weight=	28.67	
Average Square Root of Delta P (mm H20)=	2.1390	
% Isokinetic=	99.6	
Pitot Coefficient=	0.83	
Sampling Time (Minutes)=	62.5	
Nozzle Diameter (mm)=	5.97	
Stack Axis #1 (Meters)=	2.438	
Stack Axis #2 (Meters)=	2.438	
Rectangular Stack		
Stack Area (Square Meters)=	5.946	
Stack Velocity (Actual, m/min)=	433	
Flow rate (Actual, Cubic m/min)=	2,573	
Flow rate (Standard, Wet, Cubic m/min)=	2,588	
Flow rate (Standard, Dry, Cubic m/min)=	2,553	

Particulate Loading - Front Half

Particulate Weight (g)=	0.1333	Corr. to 7% O2 & 12% CO2
Particulate Loading, Dry Std. (mg/cu m)=	178.2	4988.4 17815.7
Particulate Loading, Actual (mg/cu m)=	176.7	
Emission Rate (kg/hr)=	27.25	

No Back Half Analysis

FILE NAME - PARTMT22
RUN # - PARTICULATE/METALS RUN NO. 22
LOCATION - DERAMUS FIELD STATION
DATE - 4/5/93
PROJECT # - 9712M-51-16

PROG.=VER 06/09/89
04-28-1993 16:36:06

Point #	Delta P (in. H20)	Delta H (in. H20)	Stack T (F)	Meter T In(F)	Meter T Out(F)
1	0.250	0.90	52	77	76
2	0.160	0.60	52	75	76
3	0.120	0.45	50	75	75
4	0.240	0.89	52	75	75
5	0.180	0.63	53	75	75
6	0.210	0.75	51	76	75
7	0.170	0.59	51	76	75
8	0.260	0.90	52	76	75
9	0.330	1.15	52	76	75
10	0.270	0.90	51	78	75
11	0.150	0.50	53	77	75
12	0.140	0.45	53	78	75
13	0.270	0.85	53	78	75
14	0.310	1.00	53	78	75
15	0.200	0.60	54	79	75
16	0.110	0.33	53	78	76
17	0.140	0.40	53	77	75
18	0.170	0.55	54	78	76
19	0.150	0.50	53	78	76
20	0.220	0.73	52	79	76
21	0.090	0.33	53	79	76
22	0.140	0.49	53	78	76
23	0.080	0.25	52	78	76
24	0.170	0.55	53	79	76
25	0.120	0.35	55	79	76

Fraction	Final Wt. (g)	Tare Wt. (g)	Blank Wt. (g)	Net Wt. (g)
DRY CATCH	0.0000	0.0000	0.0000	0.0000
FILTER	1.1173	1.0440	0.0000	0.0733

Fraction	Final Wt. (g)	Tare Wt. (g)	Vol. (ml)	Net Wt. (g)
PROBE RINSE	160.7760	160.7160	0.0	0.0600
IMPINGERS	0.0000	0.0000	0.0	0.0000

Probe Rinse Blank (mg/ml) = 0.0000
Impinger Blank (mg/ml) = 0.0000

FILE NAME - PARTMT23 PROG.=VER 06/09/89
RUN # - PARTICULATE/METALS RUN NO. 23 04-28-1993 16:37:08
LOCATION - DERAMUS FIELD STATION
DATE - 4/6/93
PROJECT # - 9712M-51-16

Initial Meter Volume (Cubic Feet)=	558.997	
Final Meter Volume (Cubic Feet)=	583.804	
Meter Factor=	1.023	
Final Leak Rate (cu ft/min)=	0.005	
Net Meter Volume (Cubic Feet)=	25.378	
Gas Volume (Dry Standard Cubic Feet)=	25.550	
Barometric Pressure (in Hg)=	29.80	
Static Pressure (Inches H20)=	-1.20	
Percent Oxygen=	20.5	
Percent Carbon Dioxide=	0.0	
Moisture Collected (ml)=	7.4	
Percent Water=	0.9	**Saturated Stack**
Average Meter Temperature (F)=	63	
Average Delta H (in H20)=	0.49	
Average Delta P (in H20)=	0.165	
Average Stack Temperature (F)=	41	
Dry Molecular Weight=	28.82	
Wet Molecular Weight=	28.72	
Average Square Root of Delta P (in H20)=	0.4000	
% Isokinetic=	102.1	
Pitot Coefficient=	0.82	
Sampling Time (Minutes)=	62.5	
Nozzle Diameter (Inches)=	0.235	
Stack Axis #1 (Inches)=	96.0	
Stack Axis #2 (Inches)=	96.0	
Rectangular Stack		
Stack Area (Square Feet)=	64.00	
Stack Velocity (Actual, Feet/min)=	1,283	
Flow Rate (Actual, Cubic ft/min)=	82,122	
Flow rate (Standard, Wet, Cubic ft/min)=	85,864	
Flow Rate (Standard, Dry, Cubic ft/min)=	85,107	

Particulate Loading - Front Half

Particulate Weight (g)=	0.0771	Corr. to 7% O2 & 12% CO2
Particulate Loading, Dry Std. (gr/scf)=	0.0465	1.3011 4.6467
Particulate Loading, Actual (gr/cu ft)=	0.0481	
Emission Rate (lb/hr)=	33.89	

No Back Half Analysis

* * METRIC UNITS * *

FILE NAME - PARTMT23
RUN # - PARTICULATE/METALS RUN NO. 23
LOCATION - DERAMUS FIELD STATION
DATE - 4/6/93
PROJECT # - 9712M-51-16

PROG.=VER 06/09/89
04-28-1993 16:37:09

Initial Meter Volume (Cubic Meters)=	15.829	
Final Meter Volume (Cubic Meters)=	16.531	
Meter Factor=	1.023	
Final Leak Rate (cu m/min)=	0.0001	
Net Meter Volume (Cubic Meters)=	0.719	
Gas Volume (Dry Standard Cubic Meters)=	0.723	
Barometric Pressure (mm Hg)=	757	
Static Pressure (mm H20)=	-30	
Percent Oxygen=	20.5	
Percent Carbon Dioxide=	0.0	
Moisture Collected (ml)=	7.4	
Percent Water=	0.9	**Saturated Stack**
Average Meter Temperature (C)=	17	
Average Delta H (mm H20)=	12.4	
Average Delta P (mm H20)=	4.2	
Average Stack Temperature (C)=	5	
Dry Molecular Weight=	28.82	
Wet Molecular Weight=	28.72	
Average Square Root of Delta P (mm H20)=	2.0161	
% Isokinetic=	102.1	
Pitot Coefficient=	0.82	
Sampling Time (Minutes)=	62.5	
Nozzle Diameter (mm)=	5.97	
Stack Axis #1 (Meters)=	2.438	
Stack Axis #2 (Meters)=	2.438	
Rectangular Stack		
Stack Area (Square Meters)=	5.946	
Stack Velocity (Actual, m/min)=	391	
Flow rate (Actual, Cubic m/min)=	2,325	
Flow rate (Standard, Wet, Cubic m/min)=	2,431	
Flow rate (Standard, Dry, Cubic m/min)=	2,410	

Particulate Loading - Front Half

Particulate Weight (g)=	0.0771	Corr. to 7% O2 & 12% CO2
Particulate Loading, Dry Std. (mg/cu m)=	106.6	2983.7 10655.9
Particulate Loading, Actual (mg/cu m)=	110.4	
Emission Rate (kg/hr)=	15.39	

No Back Half Analysis

FILE NAME - PARTMT23
RUN # - PARTICULATE/METALS RUN NO. 23
LOCATION - DERAMUS FIELD STATION
DATE - 4/6/93
PROJECT # - 9712M-51-16

PROG.=VER 06/09/89
04-28-1993 16:37:09

Point #	Delta P (in. H20)	Delta H (in. H20)	Stack T (F)	Meter T In(F)	Meter T Out(F)
1	0.135	0.37	39	55	54
2	0.130	0.36	40	56	54
3	0.350	0.94	40	56	54
4	0.250	0.75	40	57	55
5	0.090	0.21	40	58	55
6	0.150	0.42	41	58	56
7	0.150	0.42	40	60	56
8	0.170	0.49	40	61	57
9	0.130	0.33	41	62	58
10	0.120	0.32	42	63	58
11	0.120	0.32	42	62	60
12	0.120	0.32	41	64	60
13	0.130	0.36	41	65	60
14	0.100	0.26	42	66	61
15	0.070	0.17	42	67	62
16	0.160	0.46	42	65	63
17	0.200	0.59	41	67	63
18	0.170	0.56	42	69	64
19	0.220	0.73	42	70	65
20	0.120	0.30	43	72	65
21	0.170	0.56	42	69	67
22	0.240	0.80	43	72	67
23	0.220	0.73	43	74	67
24	0.270	0.90	44	75	68
25	0.150	0.50	44	77	69

Fraction	Final Wt. (g)	Tare Wt. (g)	Blank Wt. (g)	Net Wt. (g)
DRY CATCH	0.0000	0.0000	0.0000	0.0000
FILTER	1.0883	1.0402	0.0000	0.0481

Fraction	Final Wt. (g)	Tare Wt. (g)	Vol. (ml)	Net Wt. (g)
PROBE RINSE	162.1957	162.1667	0.0	0.0290
IMPINGERS	0.0000	0.0000	0.0	0.0000

Probe Rinse Blank (mg/ml)= 0.0000
Impinger Blank (mg/ml)= 0.0000

FILE NAME - PARTMT24
RUN # - PARTICULATE/METALS RUN NO. 24
LOCATION - DERAMUS FIELD STATION
DATE - 4/6/93
PROJECT # - 9712M-51-16

PROG.=VER 06/09/89
04-28-1993 16:38:04

Initial Meter Volume (Cubic Feet)=	461.914	
Final Meter Volume (Cubic Feet)=	489.726	
Meter Factor=	1.017	
Final Leak Rate (cu ft/min)=	0.002	
Net Meter Volume (Cubic Feet)=	28.285	
Gas Volume (Dry Standard Cubic Feet)=	28.451	
Barometric Pressure (in Hg)=	29.80	
Static Pressure (Inches H20)=	-1.20	
Percent Oxygen=	20.5	
Percent Carbon Dioxide=	0.0	
Moisture Collected (ml)=	18.6	
Percent Water=	0.9	**Saturated Stack**
Average Meter Temperature (F)=	63	
Average Delta H (in H20)=	0.69	
Average Delta P (in H20)=	0.197	
Average Stack Temperature (F)=	43	
Dry Molecular Weight=	28.82	
Wet Molecular Weight=	28.72	
Average Square Root of Delta P (in H20)=	0.4399	
% Isokinetic=	101.3	
Pitot Coefficient=	0.83	
Sampling Time (Minutes)=	62.5	
Nozzle Diameter (Inches)=	0.235	
Stack Axis #1 (Inches)=	96.0	
Stack Axis #2 (Inches)=	96.0	
Rectangular Stack		
Stack Area (Square Feet)=	64.00	
Stack Velocity (Actual, Feet/min)=	1,444	
Flow Rate (Actual, Cubic ft/min)=	92,404	
Flow rate (Standard, Wet, Cubic ft/min)=	96,413	
Flow Rate (Standard, Dry, Cubic ft/min)=	95,529	

Particulate Loading - Front Half

Particulate Weight (g)=	0.1674	Corr. to 7% O2 & 12% CO2
Particulate Loading, Dry Std. (gr/scf)=	0.0906	2.5370 9.0609
Particulate Loading, Actual (gr/cu ft)=	0.0936	
Emission Rate (lb/hr)=	74.18	

No Back Half Analysis

* * METRIC UNITS * *

FILE NAME - PARTMT24
RUN # - PARTICULATE/METALS RUN NO. 24
LOCATION - DERAMUS FIELD STATION
DATE - 4/6/93
PROJECT # - 9712M-51-16

PROG.=VER 06/09/89
04-28-1993 16:38:04

Initial Meter Volume (Cubic Meters)=	13.080	
Final Meter Volume (Cubic Meters)=	13.867	
Meter Factor=	1.017	
Final Leak Rate (cu m/min)=	0.0001	
Net Meter Volume (Cubic Meters)=	0.801	
Gas Volume (Dry Standard Cubic Meters)=	0.806	
Barometric Pressure (mm Hg)=	757	
Static Pressure (mm H20)=	-30	
Percent Oxygen=	20.5	
Percent Carbon Dioxide=	0.0	
Moisture Collected (ml)=	18.6	
Percent Water=	0.9	**Saturated Stack**
Average Meter Temperature (C)=	17	
Average Delta H (mm H20)=	17.4	
Average Delta P (mm H20)=	5.0	
Average Stack Temperature (C)=	6	
Dry Molecular Weight=	28.82	
Wet Molecular Weight=	28.72	
Average Square Root of Delta P (mm H20)=	2.2171	
% Isokinetic=	101.3	
Pitot Coefficient=	0.83	
Sampling Time (Minutes)=	62.5	
Nozzle Diameter (mm)=	5.97	
Stack Axis #1 (Meters)=	2.438	
Stack Axis #2 (Meters)=	2.438	
Rectangular Stack		
Stack Area (Square Meters)=	5.946	
Stack Velocity (Actual, m/min)=	440	
Flow rate (Actual, Cubic m/min)=	2,617	
Flow rate (Standard, Wet, Cubic m/min)=	2,730	
Flow rate (Standard, Dry, Cubic m/min)=	2,705	

Particulate Loading - Front Half

Particulate Weight (g)=	0.1674	Corr. to 7% O2 & 12% CO2
Particulate Loading, Dry Std. (mg/cu m)=	207.8	5818.0 20778.7
Particulate Loading, Actual (mg/cu m)=	214.7	
Emission Rate (kg/hr)=	33.68	

No Back Half Analysis

FILE NAME - PARTMT24
RUN # - PARTICULATE/METALS RUN NO. 24
LOCATION - DERAMUS FIELD STATION
DATE - 4/6/93
PROJECT # - 9712M-51-16

PROG.=VER 06/09/89
04-28-1993 16:38:05

Point #	Delta P (in. H20)	Delta H (in. H20)	Stack T (F)	Meter T In(F)	Meter T Out(F)
1	0.250	0.87	40	56	55
2	0.230	0.79	41	57	55
3	0.190	0.84	41	57	55
4	0.230	0.77	41	57	55
5	0.200	0.66	40	59	56
6	0.220	0.75	42	59	57
7	0.290	1.00	42	61	57
8	0.300	1.10	41	62	58
9	0.280	0.95	41	64	58
10	0.180	0.60	42	65	59
11	0.180	0.60	42	65	60
12	0.240	0.80	43	65	60
13	0.240	0.90	43	66	61
14	0.240	0.80	43	68	62
15	0.150	0.45	43	69	62
16	0.130	0.45	43	67	64
17	0.200	0.70	42	69	64
18	0.200	0.70	43	70	64
19	0.170	0.60	43	71	65
20	0.120	0.42	44	72	66
21	0.140	0.49	44	70	67
22	0.150	0.50	44	72	67
23	0.160	0.55	45	73	67
24	0.140	0.49	45	74	68
25	0.100	0.35	45	75	69

Fraction	Final Wt. (g)	Tare Wt. (g)	Blank Wt. (g)	Net Wt. (g)
DRY CATCH	0.0000	0.0000	0.0000	0.0000
FILTER	1.1533	1.0486	0.0000	0.1047

Fraction	Final Wt. (g)	Tare Wt. (g)	Vol. (ml)	Net Wt. (g)
PROBE RINSE	167.4935	167.4308	0.0	0.0627
IMPINGERS	0.0000	0.0000	0.0	0.0000

Probe Rinse Blank (mg/ml) = 0.0000
Impinger Blank (mg/ml) = 0.0000

FILE NAME - PARTMT25
RUN # - PARTICULATE/METALS RUN NO. 25
LOCATION - DERAMUS FIELD STATION
DATE - 4/6/93
PROJECT # - 9712M-51-16

PROG.=VER 06/09/89
04-28-1993 16:38:58

Initial Meter Volume (Cubic Feet)=	584.043	
Final Meter Volume (Cubic Feet)=	608.915	
Meter Factor=	1.023	
Final Leak Rate (cu ft/min)=	0.005	
Net Meter Volume (Cubic Feet)=	25.444	
Gas Volume (Dry Standard Cubic Feet)=	24.599	
Barometric Pressure (in Hg)=	29.60	
Static Pressure (Inches H20)=	-1.20	
Percent Oxygen=	20.5	
Percent Carbon Dioxide=	0.0	
Moisture Collected (ml)=	14.4	
Percent Water=	1.4	**Saturated Stack**
Average Meter Temperature (F)=	81	
Average Delta H (in H20)=	0.46	
Average Delta P (in H20)=	0.152	
Average Stack Temperature (F)=	54	
Dry Molecular Weight=	28.82	
Wet Molecular Weight=	28.67	
Average Square Root of Delta P (in H20)=	0.3846	
% Isokinetic=	104.3	
Pitot Coefficient=	0.82	
Sampling Time (Minutes)=	62.5	
Nozzle Diameter (Inches)=	0.235	
Stack Axis #1 (Inches)=	96.0	
Stack Axis #2 (Inches)=	96.0	
Rectangular Stack		
Stack Area (Square Feet)=	64.00	
Stack Velocity (Actual, Feet/min)=	1,254	
Flow Rate (Actual, Cubic ft/min)=	80,276	
Flow rate (Standard, Wet, Cubic ft/min)=	81,337	
Flow Rate (Standard, Dry, Cubic ft/min)=	80,180	

Particulate Loading - Front Half

Particulate Weight (g)=	0.1514	Corr. to 7% O2 & 12% CO2
Particulate Loading, Dry Std. (gr/scf)=	0.0948	2.6539 9.4783
Particulate Loading, Actual (gr/cu ft)=	0.0946	
Emission Rate (lb/hr)=	65.13	

No Back Half Analysis

* * METRIC UNITS * *

FILE NAME - PARTMT25
RUN # - PARTICULATE/METALS RUN NO. 25
LOCATION - DERAMUS FIELD STATION
DATE - 4/6/93
PROJECT # - 9712M-51-16

PROG.=VER 06/09/89
04-28-1993 16:38:58

Initial Meter Volume (Cubic Meters)=	16.538	
Final Meter Volume (Cubic Meters)=	17.242	
Meter Factor=	1.023	
Final Leak Rate (cu m/min)=	0.0001	
Net Meter Volume (Cubic Meters)=	0.720	
Gas Volume (Dry Standard Cubic Meters)=	0.697	
Barometric Pressure (mm Hg)=	752	
Static Pressure (mm H20)=	-30	
Percent Oxygen=	20.5	
Percent Carbon Dioxide=	0.0	
Moisture Collected (ml)=	14.4	
Percent Water=	1.4	**Saturated Stack**
Average Meter Temperature (C)=	27	
Average Delta H (mm H20)=	11.7	
Average Delta P (mm H20)=	3.9	
Average Stack Temperature (C)=	12	
Dry Molecular Weight=	28.82	
Wet Molecular Weight=	28.67	
Average Square Root of Delta P (mm H20)=	1.9381	
% Isokinetic=	104.3	
Pitot Coefficient=	0.82	
Sampling Time (Minutes)=	62.5	
Nozzle Diameter (mm)=	5.97	
Stack Axis #1 (Meters)=	2.438	
Stack Axis #2 (Meters)=	2.438	
Rectangular Stack		
Stack Area (Square Meters)=	5.946	
Stack Velocity (Actual, m/min)=	382	
Flow rate (Actual, Cubic m/min)=	2,273	
Flow rate (Standard, Wet, Cubic m/min)=	2,303	
Flow rate (Standard, Dry, Cubic m/min)=	2,270	

Particulate Loading - Front Half

Particulate Weight (g)=	0.1514	Corr. to 7% O2 & 12% CO2
Particulate Loading, Dry Std. (mg/cu m)=	217.4	6086.1 21736.0
Particulate Loading, Actual (mg/cu m)=	217.0	
Emission Rate (kg/hr)=	29.57	

No Back Half Analysis

FILE NAME - PARTMT25
RUN # - PARTICULATE/METALS RUN NO. 25
LOCATION - DERAMUS FIELD STATION
DATE - 4/6/93
PROJECT # - 9712M-51-16

PROG.=VER 06/09/89
04-28-1993 16:38:59

Point #	Delta P (in. H20)	Delta H (in. H20)	Stack T (F)	Meter T In(F)	Meter T Out(F)
1	0.210	0.64	53	81	79
2	0.220	0.67	53	79	77
3	0.220	0.64	53	78	77
4	0.230	0.63	55	79	77
5	0.150	0.40	53	80	78
6	0.160	0.44	54	80	78
7	0.160	0.44	52	81	79
8	0.170	0.49	53	81	79
9	0.210	0.62	54	82	79
10	0.100	0.23	54	83	79
11	0.110	0.30	54	81	80
12	0.110	0.30	54	82	80
13	0.120	0.33	54	82	80
14	0.080	0.21	53	83	80
15	0.150	0.50	54	81	81
16	0.160	0.54	54	82	81
17	0.110	0.37	55	82	81
18	0.070	0.23	56	82	81
19	0.110	0.30	53	82	80
20	0.100	0.34	54	83	81
21	0.160	0.54	54	82	81
22	0.190	0.64	54	83	81
23	0.230	0.78	55	84	81
24	0.180	0.61	56	85	81
25	0.090	0.30	56	85	81

Fraction	Final Wt. (g)	Tare Wt. (g)	Blank Wt. (g)	Net Wt. (g)
DRY CATCH	0.0000	0.0000	0.0000	0.0000
FILTER	1.1683	1.0449	0.0000	0.1234

Fraction	Final Wt. (g)	Tare Wt. (g)	Vol. (ml)	Net Wt. (g)
PROBE RINSE	165.5955	165.5675	0.0	0.0280
IMPINGERS	0.0000	0.0000	0.0	0.0000

Probe Rinse Blank (mg/ml)= 0.0000
Impinger Blank (mg/ml)= 0.0000

FILE NAME - PARTMT26
RUN # - PARTICULATE/METALS RUN NO. 26
LOCATION - DERAMUS FIELD STATION
DATE - 4/6/93
PROJECT # - 9712M-51-16

PROG.=VER 06/09/89
04-28-1993 16:40:03

Initial Meter Volume (Cubic Feet)=	490.257	
Final Meter Volume (Cubic Feet)=	518.612	
Meter Factor=	1.017	
Final Leak Rate (cu ft/min)=	0.001	
Net Meter Volume (Cubic Feet)=	28.837	
Gas Volume (Dry Standard Cubic Feet)=	27.915	
Barometric Pressure (in Hg)=	29.60	
Static Pressure (Inches H20)=	-1.20	
Percent Oxygen=	20.5	
Percent Carbon Dioxide=	0.0	
Moisture Collected (ml)=	13.2	
Percent Water=	1.5	**Saturated Stack**
Average Meter Temperature (F)=	80	
Average Delta H (in H20)=	0.65	
Average Delta P (in H20)=	0.180	
Average Stack Temperature (F)=	55	
Dry Molecular Weight=	28.82	
Wet Molecular Weight=	28.66	
Average Square Root of Delta P (in H20)=	0.4199	
% Isokinetic=	106.2	
Pitot Coefficient=	0.83	
Sampling Time (Minutes)=	62.5	
Nozzle Diameter (Inches)=	0.235	
Stack Axis #1 (Inches)=	96.0	
Stack Axis #2 (Inches)=	96.0	
Rectangular Stack		
Stack Area (Square Feet)=	64.00	
Stack Velocity (Actual, Feet/min)=	1,401	
Flow Rate (Actual, Cubic ft/min)=	89,656	
Flow rate (Standard, Wet, Cubic ft/min)=	90,728	
Flow Rate (Standard, Dry, Cubic ft/min)=	89,407	

Particulate Loading - Front Half

Particulate Weight (g)=	0.1368	Corr. to 7% O2 & 12% CO2
Particulate Loading, Dry Std. (gr/scf)=	0.0755	2.1131 7.5469
Particulate Loading, Actual (gr/cu ft)=	0.0752	
Emission Rate (lb/hr)=	57.83	

No Back Half Analysis

* * METRIC UNITS * *

FILE NAME - PARTMT26 PROG.=VER 06/09/89
RUN # - PARTICULATE/METALS RUN NO. 26 04-28-1993 16:40:03
LOCATION - DERAMUS FIELD STATION
DATE - 4/6/93
PROJECT # - 9712M-51-16

Initial Meter Volume (Cubic Meters)=	13.882	
Final Meter Volume (Cubic Meters)=	14.685	
Meter Factor=	1.017	
Final Leak Rate (cu m/min)=	0.0000	
Net Meter Volume (Cubic Meters)=	0.817	
Gas Volume (Dry Standard Cubic Meters)=	0.790	
Barometric Pressure (mm Hg)=	752	
Static Pressure (mm H20)=	-30	
Percent Oxygen=	20.5	
Percent Carbon Dioxide=	0.0	
Moisture Collected (ml)=	13.2	
Percent Water=	1.5	**Saturated Stack**
Average Meter Temperature (C)=	27	
Average Delta H (mm H20)=	16.6	
Average Delta P (mm H20)=	4.6	
Average Stack Temperature (C)=	13	
Dry Molecular Weight=	28.82	
Wet Molecular Weight=	28.66	
Average Square Root of Delta P (mm H20)=	2.1163	
% Isokinetic=	106.2	
Pitot Coefficient=	0.83	
Sampling Time (Minutes)=	62.5	
Nozzle Diameter (mm)=	5.97	
Stack Axis #1 (Meters)=	2.438	
Stack Axis #2 (Meters)=	2.438	
Rectangular Stack		
Stack Area (Square Meters)=	5.946	
Stack Velocity (Actual, m/min)=	427	
Flow rate (Actual, Cubic m/min)=	2,539	
Flow rate (Standard, Wet, Cubic m/min)=	2,569	
Flow rate (Standard, Dry, Cubic m/min)=	2,532	

Particulate Loading - Front Half

Particulate Weight (g)=	0.1368	Corr. to 7% O2 & 12% CO2
Particulate Loading, Dry Std. (mg/cu m)=	173.1	4845.9 17306.7
Particulate Loading, Actual (mg/cu m)=	172.5	
Emission Rate (kg/hr)=	26.25	

No Back Half Analysis

FILE NAME - PARTMT26
RUN # - PARTICULATE/METALS RUN NO. 26
LOCATION - DERAMUS FIELD STATION
DATE - 4/6/93
PROJECT # - 9712M-51-16

PROG.=VER 06/09/89
04-28-1993 16:40:04

Point #	Delta P (in. H20)	Delta H (in. H20)	Stack T (F)	Meter T In(F)	Meter T Out(F)
1	0.230	0.80	52	77	76
2	0.200	0.70	52	79	77
3	0.200	0.69	53	79	77
4	0.170	0.59	55	80	77
5	0.140	0.48	54	81	78
6	0.170	0.59	54	80	78
7	0.240	0.84	53	82	78
8	0.230	0.90	54	82	78
9	0.230	0.80	54	83	79
10	0.150	0.52	54	84	79
11	0.150	0.52	55	82	80
12	0.250	0.87	54	83	80
13	0.260	1.10	55	84	80
14	0.200	0.70	55	84	80
15	0.170	0.67	54	85	80
16	0.130	0.51	54	83	80
17	0.190	0.66	56	81	80
18	0.250	0.87	56	82	80
19	0.240	0.90	57	82	80
20	0.100	0.40	56	82	79
21	0.100	0.35	55	81	79
22	0.120	0.47	55	81	79
23	0.120	0.47	56	81	79
24	0.120	0.41	56	82	79
25	0.140	0.48	57	82	79

Fraction	Final Wt. (g)	Tare Wt. (g)	Blank Wt. (g)	Net Wt. (g)
DRY CATCH	0.0000	0.0000	0.0000	0.0000
FILTER	1.1424	1.0354	0.0000	0.1070

Fraction	Final Wt. (g)	Tare Wt. (g)	Vol. (ml)	Net Wt. (g)
PROBE RINSE	173.5835	173.5537	0.0	0.0298
IMPINGERS	0.0000	0.0000	0.0	0.0000

Probe Rinse Blank (mg/ml) = 0.0000
Impinger Blank (mg/ml) = 0.0000

SECTION 2

HCSS CALCULATIONS

FILE NAME - PREHCSS1
RUN # - PRELIMINARY HCSS RUN 1
LOCATION - DERAMUS FIELD STATION
DATE - 3/23/93
PROJECT # - 9712M-51-16

PROG.=VER 06/09/89
03-26-1993 10:55:10

Initial Meter Volume (Cubic Feet)=	153.882	
Final Meter Volume (Cubic Feet)=	189.150	
Meter Factor=	1.015	
Final Leak Rate (cu ft/min)=	0.002	
Net Meter Volume (Cubic Feet)=	35.797	
Gas Volume (Dry Standard Cubic Feet)=	34.632	
Barometric Pressure (in Hg)=	29.12	
Static Pressure (Inches H20)=	-0.50	
Percent Oxygen=	20.5	
Percent Carbon Dioxide=	0.0	
Moisture Collected (ml)=	12.4	
Percent Water=	0.9	**Saturated Stack**
Average Meter Temperature (F)=	72	
Average Delta H (in H20)=	1.00	
Average Delta P (in H20)=	0.254	
Average Stack Temperature (F)=	42	
Dry Molecular Weight=	28.82	
Wet Molecular Weight=	28.72	
Average Square Root of Delta P (in H20)=	0.4979	
% Isokinetic=	97.3	
Pitot Coefficient=	0.84	
Sampling Time (Minutes)=	62.5	
Nozzle Diameter (Inches)=	0.249	
Stack Axis #1 (Inches)=	96.0	
Stack Axis #2 (Inches)=	96.0	
Rectangular Stack		
Stack Area (Square Feet)=	64.00	
Stack Velocity (Actual, Feet/min)=	1,663	
Flow Rate (Actual, Cubic ft/min)=	106,433	
Flow rate (Standard, Wet, Cubic ft/min)=	108,815	
Flow Rate (Standard, Dry, Cubic ft/min)=	107,815	

Particulate Loading - Front Half

		Corr. to 7% O2	& 12% CO2
Particulate Weight (g)=	0.0000		
Particulate Loading, Dry Std. (gr/scf)=	0.0000	0.0000	0.0000
Particulate Loading, Actual (gr/cu ft)=	0.0000		
Emission Rate (lb/hr)=	0.00		

No Back Half Analysis

* * METRIC UNITS * *

PROG.=VER 06/09/89
03-26-1993 10:55:10

FILE NAME - PREHCSS1
RUN # - PRELIMINARY HCSS RUN 1
LOCATION - DERAMUS FIELD STATION
DATE - 3/23/93
PROJECT # - 9712M-51-16

Initial Meter Volume (Cubic Meters)=	4.357
Final Meter Volume (Cubic Meters)=	5.356
Meter Factor=	1.015
Final Leak Rate (cu m/min)=	0.0001
Net Meter Volume (Cubic Meters)=	1.014
Gas Volume (Dry Standard Cubic Meters)=	0.981
Barometric Pressure (mm Hg)=	740
Static Pressure (mm H20)=	-13
Percent Oxygen=	20.5
Percent Carbon Dioxide=	0.0
Moisture Collected (ml)=	12.4
Percent Water=	0.9 **Saturated Stack**
Average Meter Temperature (C)=	22
Average Delta H (mm H20)=	25.4
Average Delta P (mm H20)=	6.4
Average Stack Temperature (C)=	6
Dry Molecular Weight=	28.82
Wet Molecular Weight=	28.72
Average Square Root of Delta P (mm H20)=	2.5095
% Isokinetic=	97.3
Pitot Coefficient=	0.84
Sampling Time (Minutes)=	62.5
Nozzle Diameter (mm)=	6.32
Stack Axis #1 (Meters)=	2.438
Stack Axis #2 (Meters)=	2.438
Rectangular Stack	
Stack Area (Square Meters)=	5.946
Stack Velocity (Actual, m/min)=	507
Flow rate (Actual, Cubic m/min)=	3,014
Flow rate (Standard, Wet, Cubic m/min)=	3,081
Flow rate (Standard, Dry, Cubic m/min)=	3,053

Particulate Loading - Front Half

		Corr. to 7% O2	& 12% CO2
Particulate Weight (g)=	0.0000		
Particulate Loading, Dry Std. (mg/cu m)=	0.0	0.0	0.0
Particulate Loading, Actual (mg/cu m)=	0.0		
Emission Rate (kg/hr)=	0.00		

No Back Half Analysis

FILE NAME - PREHCSS1
RUN # - PRELIMINARY HCSS RUN 1
LOCATION - DERAMUS FIELD STATION
DATE - 3/23/93
PROJECT # - 9712M-51-16

PROG.=VER 06/09/89
03-26-1993 10:55:10

Point #	Delta P (in. H20)	Delta H (in. H20)	Stack T (F)	Meter T In(F)	Meter T Out(F)
1	0.280	1.00	41	73	72
2	0.320	1.00	41	71	70
3	0.370	1.00	42	71	71
4	0.350	1.00	42	70	70
5	0.260	1.00	41	70	69
6	0.420	1.00	42	72	71
7	0.300	1.00	42	71	71
8	0.350	1.00	41	71	70
9	0.340	1.00	41	71	70
10	0.230	1.00	42	72	70
11	0.160	1.00	42	73	72
12	0.210	1.00	42	73	72
13	0.260	1.00	42	73	71
14	0.290	1.00	43	74	72
15	0.160	1.00	43	74	72
16	0.200	1.00	43	74	73
17	0.170	1.00	42	74	73
18	0.170	1.00	42	74	73
19	0.170	1.00	42	74	72
20	0.120	1.00	43	75	73
21	0.250	1.00	42	74	74
22	0.270	1.00	42	74	73
23	0.260	1.00	42	75	73
24	0.230	1.00	42	74	73
25	0.200	1.00	43	75	73

Fraction	Final Wt. (g)	Tare Wt. (g)	Blank Wt. (g)	Net Wt. (g)
DRY CATCH	0.0000	0.0000	0.0000	0.0000
FILTER	0.0000	0.0000	0.0000	0.0000

Fraction	Final Wt. (g)	Tare Wt. (g)	Vol. (ml)	Net Wt. (g)
PROBE RINSE	0.0000	0.0000	0.0	0.0000
IMPINGERS	0.0000	0.0000	0.0	0.0000

Probe Rinse Blank (mg/ml)= 0.0000
Impinger Blank (mg/ml)= 0.0000

PROG.=VER 06/09/89
03-26-1993 11:47:52

FILE NAME - PREHCSS2
RUN # - PRELIMINARY HCSS RUN 2
LOCATION - DERAMUS FIELD STATION
DATE - 3/23/93
PROJECT # - 9712M-51-16

Initial Meter Volume (Cubic Feet)=	148.549
Final Meter Volume (Cubic Feet)=	183.350
Meter Factor=	1.019
Final Leak Rate (cu ft/min)=	0.002
Net Meter Volume (Cubic Feet)=	35.462
Gas Volume (Dry Standard Cubic Feet)=	34.079
Barometric Pressure (in Hg)=	29.12
Static Pressure (Inches H20)=	-0.50
Percent Oxygen=	20.5
Percent Carbon Dioxide=	0.0
Moisture Collected (ml)=	17.4
Percent Water=	0.9 **Saturated Stack**
Average Meter Temperature (F)=	76
Average Delta H (in H20)=	1.00
Average Delta P (in H20)=	0.248
Average Stack Temperature (F)=	42
Dry Molecular Weight=	28.82
Wet Molecular Weight=	28.72
Average Square Root of Delta P (in H20)=	0.4937
% Isokinetic=	96.6
Pitot Coefficient=	0.84
Sampling Time (Minutes)=	62.5
Nozzle Diameter (Inches)=	0.249
Stack Axis #1 (Inches)=	96.0
Stack Axis #2 (Inches)=	96.0
Rectangular Stack	
Stack Area (Square Feet)=	64.00
Stack Velocity (Actual, Feet/min)=	1,649
Flow Rate (Actual, Cubic ft/min)=	105,546
Flow rate (Standard, Wet, Cubic ft/min)=	107,865
Flow Rate (Standard, Dry, Cubic ft/min)=	106,866

Particulate Loading - Front Half

		Corr. to 7% O2	& 12% CO2
Particulate Weight (g)=	0.0000		
Particulate Loading, Dry Std. (gr/scf)=	0.0000	0.0000	0.0000
Particulate Loading, Actual (gr/cu ft)=	0.0000		
Emission Rate (lb/hr)=	0.00		

No Back Half Analysis

* * METRIC UNITS * *

FILE NAME - PREHCSS2
RUN # - PRELIMINARY HCSS RUN 2
LOCATION - DERAMUS FIELD STATION
DATE - 3/23/93
PROJECT # - 9712M-51-16

PROG.=VER 06/09/89
03-26-1993 11:47:52

Initial Meter Volume (Cubic Meters)=	4.206	
Final Meter Volume (Cubic Meters)=	5.192	
Meter Factor=	1.019	
Final Leak Rate (cu m/min)=	0.0001	
Net Meter Volume (Cubic Meters)=	1.004	
Gas Volume (Dry Standard Cubic Meters)=	0.965	
Barometric Pressure (mm Hg)=	740	
Static Pressure (mm H20)=	-13	
Percent Oxygen=	20.5	
Percent Carbon Dioxide=	0.0	
Moisture Collected (ml)=	17.4	
Percent Water=	0.9	**Saturated Stack**
Average Meter Temperature (C)=	24	
Average Delta H (mm H20)=	25.4	
Average Delta P (mm H20)=	6.3	
Average Stack Temperature (C)=	6	
Dry Molecular Weight=	28.82	
Wet Molecular Weight=	28.72	
Average Square Root of Delta P (mm H20)=	2.4880	
% Isokinetic=	96.6	
Pitot Coefficient=	0.84	
Sampling Time (Minutes)=	62.5	
Nozzle Diameter (mm)=	6.32	
Stack Axis #1 (Meters)=	2.438	
Stack Axis #2 (Meters)=	2.438	
Rectangular Stack Stack Area (Square Meters)=	5.946	
Stack Velocity (Actual, m/min)=	503	
Flow rate (Actual, Cubic m/min)=	2,989	
Flow rate (Standard, Wet, Cubic m/min)=	3,054	
Flow rate (Standard, Dry, Cubic m/min)=	3,026	

Particulate Loading - Front Half

		Corr. to 7% O2	& 12% CO2
Particulate Weight (g)=	0.0000		
Particulate Loading, Dry Std. (mg/cu m)=	0.0	0.0	0.0
Particulate Loading, Actual (mg/cu m)=	0.0		
Emission Rate (kg/hr)=	0.00		

No Back Half Analysis

FILE NAME - PREHCSS2
RUN # - PRELIMINARY HCSS RUN 2
LOCATION - DERAMUS FIELD STATION
DATE - 3/23/93
PROJECT # - 9712M-51-16

PROG.=VER 06/09/89
03-26-1993 11:47:52

Point #	Delta P (in. H20)	Delta H (in. H20)	Stack T (F)	Meter T In(F)	Meter T Out(F)
1	0.220	1.00	41	75	75
2	0.230	1.00	39	75	75
3	0.230	1.00	42	73	73
4	0.210	1.00	42	74	73
5	0.180	1.00	42	75	73
6	0.310	1.00	43	75	74
7	0.340	1.00	42	75	74
8	0.370	1.00	42	75	74
9	0.340	1.00	42	76	74
10	0.240	1.00	42	77	74
11	0.290	1.00	43	76	75
12	0.230	1.00	42	77	75
13	0.390	1.00	43	78	75
14	0.350	1.00	42	78	75
15	0.210	1.00	42	79	75
16	0.260	1.00	43	77	75
17	0.210	1.00	43	78	76
18	0.280	1.00	44	78	76
19	0.240	1.00	43	79	76
20	0.170	1.00	43	80	76
21	0.190	1.00	42	77	76
22	0.170	1.00	42	78	76
23	0.210	1.00	42	78	76
24	0.180	1.00	42	79	75
25	0.150	1.00	42	80	76

Fraction	Final Wt. (g)	Tare Wt. (g)	Blank Wt. (g)	Net Wt. (g)
DRY CATCH	0.0000	0.0000	0.0000	0.0000
FILTER	0.0000	0.0000	0.0000	0.0000

Fraction	Final Wt. (g)	Tare Wt. (g)	Vol. (ml)	Net Wt. (g)
PROBE RINSE	0.0000	0.0000	0.0	0.0000
IMPINGERS	0.0000	0.0000	0.0	0.0000

Probe Rinse Blank (mg/ml) = 0.0000
Impinger Blank (mg/ml) = 0.0000

FILE NAME - PREHCSS3
RUN # - PRELIMINARY HCSS RUN 3
LOCATION - DERAMUS FIELD STATION
DATE - 3/24/93
PROJECT # - 9712M-51-16

PROG.=VER 06/09/89
03-26-1993 12:12:40

Initial Meter Volume (Cubic Feet)=	189.535
Final Meter Volume (Cubic Feet)=	216.790
Meter Factor=	1.015
Final Leak Rate (cu ft/min)=	0.015
Net Meter Volume (Cubic Feet)=	27.664
Gas Volume (Dry Standard Cubic Feet)=	26.681
Barometric Pressure (in Hg)=	29.07
Static Pressure (Inches H20)=	-0.20
Percent Oxygen=	20.5
Percent Carbon Dioxide=	0.0
Moisture Collected (ml)=	8.0
Percent Water=	0.9 **Saturated Stack**
Average Meter Temperature (F)=	73
Average Delta H (in H20)=	0.60
Average Delta P (in H20)=	0.021
Average Stack Temperature (F)=	42
Dry Molecular Weight=	28.82
Wet Molecular Weight=	28.72
Average Square Root of Delta P (in H20)=	0.1434
% Isokinetic=	114.2
Pitot Coefficient=	0.84
Sampling Time (Minutes)=	62.5
Nozzle Diameter (Inches)=	0.376
Stack Axis #1 (Inches)=	96.0
Stack Axis #2 (Inches)=	96.0
Rectangular Stack	
Stack Area (Square Feet)=	64.00
Stack Velocity (Actual, Feet/min)=	479
Flow Rate (Actual, Cubic ft/min)=	30,681
Flow rate (Standard, Wet, Cubic ft/min)=	31,312
Flow Rate (Standard, Dry, Cubic ft/min)=	31,020

Particulate Loading - Front Half

		Corr. to 7% O2	& 12% CO2
Particulate Weight (g)=	0.0000		
Particulate Loading, Dry Std. (gr/scf)=	0.0000	0.0000	0.0000
Particulate Loading, Actual (gr/cu ft)=	0.0000		
Emission Rate (lb/hr)=	0.00		

No Back Half Analysis

* * METRIC UNITS * *

FILE NAME - PREHCSS3
RUN # - PRELIMINARY HCSS RUN 3
LOCATION - DERAMUS FIELD STATION
DATE - 3/24/93
PROJECT # - 9712M-51-16

PROG.=VER 06/09/89
03-26-1993 12:12:40

Initial Meter Volume (Cubic Meters)=	5.367	
Final Meter Volume (Cubic Meters)=	6.139	
Meter Factor=	1.015	
Final Leak Rate (cu m/min)=	0.0004	
Net Meter Volume (Cubic Meters)=	0.783	
Gas Volume (Dry Standard Cubic Meters)=	0.755	
Barometric Pressure (mm Hg)=	738	
Static Pressure (mm H20)=	-5	
Percent Oxygen=	20.5	
Percent Carbon Dioxide=	0.0	
Moisture Collected (ml)=	8.0	
Percent Water=	0.9	**Saturated Stack**
Average Meter Temperature (C)=	23	
Average Delta H (mm H20)=	15.2	
Average Delta P (mm H20)=	0.5	
Average Stack Temperature (C)=	6	
Dry Molecular Weight=	28.82	
Wet Molecular Weight=	28.72	
Average Square Root of Delta P (mm H20)=	0.7227	
% Isokinetic=	114.2	
Pitot Coefficient=	0.84	
Sampling Time (Minutes)=	62.5	
Nozzle Diameter (mm)=	9.55	
Stack Axis #1 (Meters)=	2.438	
Stack Axis #2 (Meters)=	2.438	
Rectangular Stack		
Stack Area (Square Meters)=	5.946	
Stack Velocity (Actual, m/min)=	146	
Flow rate (Actual, Cubic m/min)=	869	
Flow rate (Standard, Wet, Cubic m/min)=	887	
Flow rate (Standard, Dry, Cubic m/min)=	878	

Particulate Loading - Front Half

		Corr. to 7% O2	& 12% CO2
Particulate Weight (g)=	0.0000		
Particulate Loading, Dry Std. (mg/cu m)=	0.0	0.0	0.0
Particulate Loading, Actual (mg/cu m)=	0.0		
Emission Rate (kg/hr)=	0.00		

No Back Half Analysis

FILE NAME - PREHCSS3
RUN # - PRELIMINARY HCSS RUN 3
LOCATION - DERAMUS FIELD STATION
DATE - 3/24/93
PROJECT # - 9712M-51-16

PROG.=VER 06/09/89
03-26-1993 12:12:40

Point #	Delta P (in. H20)	Delta H (in. H20)	Stack T (F)	Meter T In(F)	Meter T Out(F)
1	0.020	0.60	44	74	74
2	0.026	0.60	43	73	73
3	0.026	0.60	43	73	73
4	0.028	0.60	43	73	73
5	0.028	0.60	44	73	73
6	0.012	0.60	42	73	72
7	0.025	0.60	42	73	73
8	0.035	0.60	42	73	73
9	0.030	0.60	42	73	73
10	0.025	0.60	43	73	73
11	0.015	0.60	41	72	72
12	0.016	0.60	42	72	72
13	0.015	0.60	42	72	72
14	0.017	0.60	42	72	72
15	0.016	0.60	43	73	72
16	0.016	0.60	42	72	72
17	0.022	0.60	42	72	72
18	0.015	0.60	42	72	72
19	0.018	0.60	42	73	72
20	0.015	0.60	43	73	72
21	0.014	0.60	42	72	71
22	0.022	0.60	42	72	72
23	0.022	0.60	42	72	72
24	0.022	0.60	42	73	72
25	0.024	0.60	43	73	72

Fraction	Final Wt. (g)	Tare Wt. (g)	Blank Wt. (g)	Net Wt. (g)
DRY CATCH	0.0000	0.0000	0.0000	0.0000
FILTER	0.0000	0.0000	0.0000	0.0000

Fraction	Final Wt. (g)	Tare Wt. (g)	Vol. (ml)	Net Wt. (g)
PROBE RINSE	0.0000	0.0000	0.0	0.0000
IMPINGERS	0.0000	0.0000	0.0	0.0000

Probe Rinse Blank (mg/ml)= 0.0000
Impinger Blank (mg/ml)= 0.0000

FILE NAME - PREHCSS4
RUN # - PRELIMINARY HCSS RUN 4
LOCATION - DERAMUS FIELD STATION
DATE - 3/24/93
PROJECT # - 9712M-51-16

PROG.=VER 06/09/89
03-26-1993 13:32:28

Initial Meter Volume (Cubic Feet)=	185.062
Final Meter Volume (Cubic Feet)=	212.508
Meter Factor=	1.019
Final Leak Rate (cu ft/min)=	0.002
Net Meter Volume (Cubic Feet)=	27.967
Gas Volume (Dry Standard Cubic Feet)=	26.794
Barometric Pressure (in Hg)=	29.07
Static Pressure (Inches H20)=	-0.20
Percent Oxygen=	20.5
Percent Carbon Dioxide=	0.0
Moisture Collected (ml)=	4.0
Percent Water=	0.7
Average Meter Temperature (F)=	76
Average Delta H (in H20)=	0.60
Average Delta P (in H20)=	0.032
Average Stack Temperature (F)=	43
Dry Molecular Weight=	28.82
Wet Molecular Weight=	28.74
Average Square Root of Delta P (in H20)=	0.1764
% Isokinetic=	93.1
Pitot Coefficient=	0.84
Sampling Time (Minutes)=	62.5
Nozzle Diameter (Inches)=	0.376
Stack Axis #1 (Inches)=	96.0
Stack Axis #2 (Inches)=	96.0
Rectangular Stack	
Stack Area (Square Feet)=	64.00
Stack Velocity (Actual, Feet/min)=	590
Flow Rate (Actual, Cubic ft/min)=	37,733
Flow rate (Standard, Wet, Cubic ft/min)=	38,485
Flow Rate (Standard, Dry, Cubic ft/min)=	38,217

Particulate Loading - Front Half

		Corr. to 7% O2	& 12% CO2
Particulate Weight (g)=	0.0000		
Particulate Loading, Dry Std. (gr/scf)=	0.0000	0.0000	0.0000
Particulate Loading, Actual (gr/cu ft)=	0.0000		
Emission Rate (lb/hr)=	0.00		

No Back Half Analysis

* * METRIC UNITS * *

FILE NAME - PREHCSS4
RUN # - PRELIMINARY HCSS RUN 4
LOCATION - DERAMUS FIELD STATION
DATE - 3/24/93
PROJECT # - 9712M-51-16

PROG.=VER 06/09/89
03-26-1993 13:32:28

Initial Meter Volume (Cubic Meters)=	5.240
Final Meter Volume (Cubic Meters)=	6.017
Meter Factor=	1.019
Final Leak Rate (cu m/min)=	0.0001
Net Meter Volume (Cubic Meters)=	0.792
Gas Volume (Dry Standard Cubic Meters)=	0.759
Barometric Pressure (mm Hg)=	738
Static Pressure (mm H20)=	-5
Percent Oxygen=	20.5
Percent Carbon Dioxide=	0.0
Moisture Collected (ml)=	4.0
Percent Water=	0.7
Average Meter Temperature (C)=	24
Average Delta H (mm H20)=	15.2
Average Delta P (mm H20)=	0.8
Average Stack Temperature (C)=	6
Dry Molecular Weight=	28.82
Wet Molecular Weight=	28.74
Average Square Root of Delta P (mm H20)=	0.8890
% Isokinetic=	93.1
Pitot Coefficient=	0.84
Sampling Time (Minutes)=	62.5
Nozzle Diameter (mm)=	9.55
Stack Axis #1 (Meters)=	2.438
Stack Axis #2 (Meters)=	2.438
Rectangular Stack	
Stack Area (Square Meters)=	5.946
Stack Velocity (Actual, m/min)=	180
Flow rate (Actual, Cubic m/min)=	1,068
Flow rate (Standard, Wet, Cubic m/min)=	1,090
Flow rate (Standard, Dry, Cubic m/min)=	1,082

Particulate Loading - Front Half

		Corr. to 7% O2	& 12% CO2
Particulate Weight (g)=	0.0000		
Particulate Loading, Dry Std. (mg/cu m)=	0.0	0.0	0.0
Particulate Loading, Actual (mg/cu m)=	0.0		
Emission Rate (kg/hr)=	0.00		

No Back Half Analysis

FILE NAME - PREHCSS4
RUN # - PRELIMINARY HCSS RUN 4
LOCATION - DERAMUS FIELD STATION
DATE - 3/24/93
PROJECT # - 9712M-51-16

PROG.=VER 06/09/89
03-26-1993 13:32:29

Point #	Delta P (in. H20)	Delta H (in. H20)	Stack T (F)	Meter T In(F)	Meter T Out(F)
1	0.015	0.60	44	77	77
2	0.016	0.60	44	77	76
3	0.015	0.60	44	77	76
4	0.017	0.60	44	77	76
5	0.016	0.60	44	77	76
6	0.030	0.60	43	76	76
7	0.030	0.60	43	76	76
8	0.035	0.60	43	76	76
9	0.030	0.60	43	76	76
10	0.030	0.60	43	77	76
11	0.032	0.60	42	76	76
12	0.035	0.60	42	76	76
13	0.036	0.60	42	75	75
14	0.035	0.60	42	76	75
15	0.030	0.60	43	77	75
16	0.035	0.60	43	76	75
17	0.050	0.60	42	76	75
18	0.045	0.60	42	76	75
19	0.035	0.60	42	77	75
20	0.035	0.60	42	78	75
21	0.027	0.60	42	76	75
22	0.045	0.60	42	77	75
23	0.045	0.60	42	77	75
24	0.040	0.60	43	78	75
25	0.040	0.60	42	78	75

Fraction	Final Wt. (g)	Tare Wt. (g)	Blank Wt. (g)	Net Wt. (g)
DRY CATCH	0.0000	0.0000	0.0000	0.0000
FILTER	0.0000	0.0000	0.0000	0.0000

Fraction	Final Wt. (g)	Tare Wt. (g)	Vol. (ml)	Net Wt. (g)
PROBE RINSE	0.0000	0.0000	0.0	0.0000
IMPINGERS	0.0000	0.0000	0.0	0.0000

Probe Rinse Blank (mg/ml)= 0.0000
Impinger Blank (mg/ml)= 0.0000

FILE NAME - PREHCSS5
RUN # - PRELIMINARY HCSS RUN 5
LOCATION - DERAMUS FIELD STATION
DATE - 3/26/93
PROJECT # - 9712M-51-16

PROG.=VER 06/09/89
03-26-1993 14:29:05

Initial Meter Volume (Cubic Feet)=	217.063
Final Meter Volume (Cubic Feet)=	251.423
Meter Factor=	1.015
Final Leak Rate (cu ft/min)=	0.010
Net Meter Volume (Cubic Feet)=	34.875
Gas Volume (Dry Standard Cubic Feet)=	33.587
Barometric Pressure (in Hg)=	29.16
Static Pressure (Inches H20)=	-0.40
Percent Oxygen=	20.5
Percent Carbon Dioxide=	0.0
Moisture Collected (ml)=	5.6
Percent Water=	0.8
Average Meter Temperature (F)=	75
Average Delta H (in H20)=	0.95
Average Delta P (in H20)=	0.091
Average Stack Temperature (F)=	48
Dry Molecular Weight=	28.82
Wet Molecular Weight=	28.74
Average Square Root of Delta P (in H20)=	0.2958
% Isokinetic=	102.2
Pitot Coefficient=	0.84
Sampling Time (Minutes)=	62.5
Nozzle Diameter (Inches)=	0.311
Stack Axis #1 (Inches)=	96.0
Stack Axis #2 (Inches)=	96.0
Rectangular Stack	
Stack Area (Square Feet)=	64.00
Stack Velocity (Actual, Feet/min)=	992
Flow Rate (Actual, Cubic ft/min)=	63,516
Flow rate (Standard, Wet, Cubic ft/min)=	64,320
Flow Rate (Standard, Dry, Cubic ft/min)=	63,819

Particulate Loading - Front Half

		Corr. to 7% O2	& 12% CO2
Particulate Weight (g)=	0.0000		
Particulate Loading, Dry Std. (gr/scf)=	0.0000	0.0000	0.0000
Particulate Loading, Actual (gr/cu ft)=	0.0000		
Emission Rate (lb/hr)=	0.00		

No Back Half Analysis

* * METRIC UNITS * *

FILE NAME - PREHCSS5
RUN # - PRELIMINARY HCSS RUN 5
LOCATION - DERAMUS FIELD STATION
DATE - 3/26/93
PROJECT # - 9712M-51-16

PROG.=VER 06/09/89
03-26-1993 14:29:06

Initial Meter Volume (Cubic Meters)=	6.146
Final Meter Volume (Cubic Meters)=	7.119
Meter Factor=	1.015
Final Leak Rate (cu m/min)=	0.0003
Net Meter Volume (Cubic Meters)=	0.988
Gas Volume (Dry Standard Cubic Meters)=	0.951
Barometric Pressure (mm Hg)=	741
Static Pressure (mm H20)=	-10
Percent Oxygen=	20.5
Percent Carbon Dioxide=	0.0
Moisture Collected (ml)=	5.6
Percent Water=	0.8
Average Meter Temperature (C)=	24
Average Delta H (mm H20)=	24.2
Average Delta P (mm H20)=	2.3
Average Stack Temperature (C)=	9
Dry Molecular Weight=	28.82
Wet Molecular Weight=	28.74
Average Square Root of Delta P (mm H20)=	1.4908
% Isokinetic=	102.2
Pitot Coefficient=	0.84
Sampling Time (Minutes)=	62.5
Nozzle Diameter (mm)=	7.90
Stack Axis #1 (Meters)=	2.438
Stack Axis #2 (Meters)=	2.438
Rectangular Stack	
Stack Area (Square Meters)=	5.946
Stack Velocity (Actual, m/min)=	302
Flow rate (Actual, Cubic m/min)=	1,799
Flow rate (Standard, Wet, Cubic m/min)=	1,821
Flow rate (Standard, Dry, Cubic m/min)=	1,807

Particulate Loading - Front Half

		Corr. to 7% O2	& 12% CO2
Particulate Weight (g)=	0.0000		
Particulate Loading, Dry Std. (mg/cu m)=	0.0	0.0	0.0
Particulate Loading, Actual (mg/cu m)=	0.0		
Emission Rate (kg/hr)=	0.00		

No Back Half Analysis

FILE NAME - PREHCSS5
RUN # - PRELIMINARY HCSS RUN 5
LOCATION - DERAMUS FIELD STATION
DATE - 3/26/93
PROJECT # - 9712M-51-16

PROG.=VER 06/09/89
03-26-1993 14:29:06

Point #	Delta P (in. H20)	Delta H (in. H20)	Stack T (F)	Meter T In(F)	Meter T Out(F)
1	0.075	1.00	47	71	70
2	0.100	0.95	47	71	71
3	0.100	0.95	47	71	70
4	0.095	0.95	47	71	71
5	0.095	0.95	47	72	71
6	0.060	0.95	46	72	73
7	0.095	0.95	47	73	72
8	0.105	0.95	47	73	72
9	0.150	0.95	47	74	72
10	0.100	0.95	48	75	73
11	0.040	0.95	47	75	73
12	0.075	0.95	47	75	74
13	0.140	0.95	47	75	74
14	0.145	0.95	48	77	75
15	0.105	0.95	49	78	75
16	0.050	0.95	48	78	76
17	0.100	0.95	48	78	77
18	0.150	0.95	49	79	77
19	0.135	0.95	49	81	78
20	0.095	0.95	48	81	78
21	0.045	0.95	48	79	78
22	0.040	0.95	48	80	79
23	0.055	0.95	48	81	79
24	0.065	0.95	48	81	79
25	0.055	0.95	49	82	80

Fraction	Final Wt. (g)	Tare Wt. (g)	Blank Wt. (g)	Net Wt. (g)
DRY CATCH	0.0000	0.0000	0.0000	0.0000
FILTER	0.0000	0.0000	0.0000	0.0000

Fraction	Final Wt. (g)	Tare Wt. (g)	Vol. (ml)	Net Wt. (g)
PROBE RINSE	0.0000	0.0000	0.0	0.0000
IMPINGERS	0.0000	0.0000	0.0	0.0000

Probe Rinse Blank (mg/ml) = 0.0000
Impinger Blank (mg/ml) = 0.0000

FILE NAME - PREHCSS6
RUN # - PRELIMINARY HCSS RUN 6
LOCATION - DERAMUS FIELD STATION
DATE - 3/26/93
PROJECT # - 9712M-51-16

PROG.=VER 06/09/89
03-26-1993 15:30:49

Initial Meter Volume (Cubic Feet)=	213.150	
Final Meter Volume (Cubic Feet)=	247.321	
Meter Factor=	1.019	
Final Leak Rate (cu ft/min)=	0.005	
Net Meter Volume (Cubic Feet)=	34.820	
Gas Volume (Dry Standard Cubic Feet)=	33.344	
Barometric Pressure (in Hg)=	29.16	
Static Pressure (Inches H20)=	-0.40	
Percent Oxygen=	20.5	
Percent Carbon Dioxide=	0.0	
Moisture Collected (ml)=	11.4	
Percent Water=	1.3	**Saturated Stack**
Average Meter Temperature (F)=	78	
Average Delta H (in H20)=	0.95	
Average Delta P (in H20)=	0.120	
Average Stack Temperature (F)=	51	
Dry Molecular Weight=	28.82	
Wet Molecular Weight=	28.68	
Average Square Root of Delta P (in H20)=	0.3416	
% Isokinetic=	89.1	
Pitot Coefficient=	0.84	
Sampling Time (Minutes)=	62.5	
Nozzle Diameter (Inches)=	0.310	
Stack Axis #1 (Inches)=	96.0	
Stack Axis #2 (Inches)=	96.0	
Rectangular Stack		
Stack Area (Square Feet)=	64.00	
Stack Velocity (Actual, Feet/min)=	1,151	
Flow Rate (Actual, Cubic ft/min)=	73,669	
Flow rate (Standard, Wet, Cubic ft/min)=	74,077	
Flow Rate (Standard, Dry, Cubic ft/min)=	73,113	

Particulate Loading - Front Half

		Corr. to 7% O2	& 12% CO2
Particulate Weight (g)=	0.0000		
Particulate Loading, Dry Std. (gr/scf)=	0.0000	0.0000	0.0000
Particulate Loading, Actual (gr/cu ft)=	0.0000		
Emission Rate (lb/hr)=	0.00		

No Back Half Analysis

* * METRIC UNITS * *

FILE NAME - PREHCSS6
RUN # - PRELIMINARY HCSS RUN 6
LOCATION - DERAMUS FIELD STATION
DATE - 3/26/93
PROJECT # - 9712M-51-16

PROG.=VER 06/09/89
03-26-1993 15:30:49

Initial Meter Volume (Cubic Meters)=	6.036	
Final Meter Volume (Cubic Meters)=	7.003	
Meter Factor=	1.019	
Final Leak Rate (cu m/min)=	0.0001	
Net Meter Volume (Cubic Meters)=	0.986	
Gas Volume (Dry Standard Cubic Meters)=	0.944	
Barometric Pressure (mm Hg)=	741	
Static Pressure (mm H20)=	-10	
Percent Oxygen=	20.5	
Percent Carbon Dioxide=	0.0	
Moisture Collected (ml)=	11.4	
Percent Water=	1.3	**Saturated Stack**
Average Meter Temperature (C)=	26	
Average Delta H (mm H20)=	24.2	
Average Delta P (mm H20)=	3.0	
Average Stack Temperature (C)=	11	
Dry Molecular Weight=	28.82	
Wet Molecular Weight=	28.68	
Average Square Root of Delta P (mm H20)=	1.7214	
% Isokinetic=	89.1	
Pitot Coefficient=	0.84	
Sampling Time (Minutes)=	62.5	
Nozzle Diameter (mm)=	7.87	
Stack Axis #1 (Meters)=	2.438	
Stack Axis #2 (Meters)=	2.438	
Rectangular Stack		
Stack Area (Square Meters)=	5.946	
Stack Velocity (Actual, m/min)=	351	
Flow rate (Actual, Cubic m/min)=	2,086	
Flow rate (Standard, Wet, Cubic m/min)=	2,098	
Flow rate (Standard, Dry, Cubic m/min)=	2,070	

Particulate Loading - Front Half

		Corr. to 7% O2	& 12% CO2
Particulate Weight (g)=	0.0000		
Particulate Loading, Dry Std. (mg/cu m)=	0.0	0.0	0.0
Particulate Loading, Actual (mg/cu m)=	0.0		
Emission Rate (kg/hr)=	0.00		

No Back Half Analysis

FILE NAME - PREHCSS6
RUN # - PRELIMINARY HCSS RUN 6
LOCATION - DERAMUS FIELD STATION
DATE - 3/26/93
PROJECT # - 9712M-51-16

PROG.=VER 06/09/89
03-26-1993 15:30:50

Point #	Delta P (in. H20)	Delta H (in. H20)	Stack T (F)	Meter T In(F)	Meter T Out(F)
1	0.150	1.00	50	73	72
2	0.130	0.95	51	73	72
3	0.145	0.95	51	73	73
4	0.105	0.95	51	73	72
5	0.085	0.95	51	74	73
6	0.080	0.95	52	74	74
7	0.130	0.95	51	76	74
8	0.155	0.95	51	77	74
9	0.150	0.95	51	78	75
10	0.120	0.95	51	79	75
11	0.085	0.95	51	76	76
12	0.115	0.95	51	80	76
13	0.175	0.95	51	82	77
14	0.180	0.95	51	83	78
15	0.165	0.95	51	81	77
16	0.065	0.95	52	80	78
17	0.105	0.95	52	83	79
18	0.125	0.95	52	84	79
19	0.155	0.95	52	86	80
20	0.130	0.95	52	87	80
21	0.140	0.95	51	83	81
22	0.100	0.95	51	85	81
23	0.090	0.95	51	86	81
24	0.065	0.95	51	87	82
25	0.045	0.95	52	88	82

Fraction	Final Wt. (g)	Tare Wt. (g)	Blank Wt. (g)	Net Wt. (g)
DRY CATCH	0.0000	0.0000	0.0000	0.0000
FILTER	0.0000	0.0000	0.0000	0.0000

Fraction	Final Wt. (g)	Tare Wt. (g)	Vol. (ml)	Net Wt. (g)
PROBE RINSE	0.0000	0.0000	0.0	0.0000
IMPINGERS	0.0000	0.0000	0.0	0.0000

Probe Rinse Blank (mg/ml)= 0.0000
Impinger Blank (mg/ml)= 0.0000

FILE NAME - HCSS7
RUN # - HCSS RUN 7
LOCATION - DERAMUS FIELD STATION
DATE - 3/29/93
PROJECT # - 9712M-51-16

PROG.=VER 06/09/89
03-31-1993 14:38:57

Initial Meter Volume (Cubic Feet)=	251.682
Final Meter Volume (Cubic Feet)=	286.955
Meter Factor=	1.015
Final Leak Rate (cu ft/min)=	0.005
Net Meter Volume (Cubic Feet)=	35.802
Gas Volume (Dry Standard Cubic Feet)=	33.985
Barometric Pressure (in Hg)=	28.84
Static Pressure (Inches H20)=	-0.47
Percent Oxygen=	20.5
Percent Carbon Dioxide=	0.0
Moisture Collected (ml)=	12.1
Percent Water=	1.6
Average Meter Temperature (F)=	77
Average Delta H (in H20)=	1.00
Average Delta P (in H20)=	0.099
Average Stack Temperature (F)=	66
Dry Molecular Weight=	28.82
Wet Molecular Weight=	28.64
Average Square Root of Delta P (in H20)=	0.3104
% Isokinetic=	103.1
Pitot Coefficient=	0.83
Sampling Time (Minutes)=	62.5
Nozzle Diameter (Inches)=	0.310
Stack Axis #1 (Inches)=	96.0
Stack Axis #2 (Inches)=	96.0
Rectangular Stack	
Stack Area (Square Feet)=	64.00
Stack Velocity (Actual, Feet/min)=	1,060
Flow Rate (Actual, Cubic ft/min)=	67,814
Flow rate (Standard, Wet, Cubic ft/min)=	65,501
Flow Rate (Standard, Dry, Cubic ft/min)=	64,421

Particulate Loading - Front Half

		Corr. to 7% O2	& 12% CO2
Particulate Weight (g)=	0.0000		
Particulate Loading, Dry Std. (gr/scf)=	0.0000	0.0000	0.0000
Particulate Loading, Actual (gr/cu ft)=	0.0000		
Emission Rate (lb/hr)=	0.00		

No Back Half Analysis

* * METRIC UNITS * *

FILE NAME - HCSS7
RUN # - HCSS RUN 7
LOCATION - DERAMUS FIELD STATION
DATE - 3/29/93
PROJECT # - 9712M-51-16

PROG.=VER 06/09/89
03-31-1993 14:38:57

Initial Meter Volume (Cubic Meters)=	7.127
Final Meter Volume (Cubic Meters)=	8.125
Meter Factor=	1.015
Final Leak Rate (cu m/min)=	0.0001
Net Meter Volume (Cubic Meters)=	1.014
Gas Volume (Dry Standard Cubic Meters)=	0.962
Barometric Pressure (mm Hg)=	733
Static Pressure (mm H20)=	-12
Percent Oxygen=	20.5
Percent Carbon Dioxide=	0.0
Moisture Collected (ml)=	12.1
Percent Water=	1.6
Average Meter Temperature (C)=	25
Average Delta H (mm H20)=	25.4
Average Delta P (mm H20)=	2.5
Average Stack Temperature (C)=	19
Dry Molecular Weight=	28.82
Wet Molecular Weight=	28.64
Average Square Root of Delta P (mm H20)=	1.5643
% Isokinetic=	103.1
Pitot Coefficient=	0.83
Sampling Time (Minutes)=	62.5
Nozzle Diameter (mm)=	7.87
Stack Axis #1 (Meters)=	2.438
Stack Axis #2 (Meters)=	2.438
Rectangular Stack	
Stack Area (Square Meters)=	5.946
Stack Velocity (Actual, m/min)=	323
Flow rate (Actual, Cubic m/min)=	1,920
Flow rate (Standard, Wet, Cubic m/min)=	1,855
Flow rate (Standard, Dry, Cubic m/min)=	1,824

Particulate Loading - Front Half

		Corr. to 7% O2	& 12% CO2
Particulate Weight (g)=	0.0000		
Particulate Loading, Dry Std. (mg/cu m)=	0.0	0.0	0.0
Particulate Loading, Actual (mg/cu m)=	0.0		
Emission Rate (kg/hr)=	0.00		

No Back Half Analysis

FILE NAME - HCSS7
RUN # - HCSS RUN 7
LOCATION - DERAMUS FIELD STATION
DATE - 3/29/93
PROJECT # - 9712M-51-16

PROG.=VER 06/09/89
03-31-1993 14:38:58

Point #	Delta P (in. H20)	Delta H (in. H20)	Stack T (F)	Meter T In(F)	Meter T Out(F)
1	0.090	1.00	63	73	74
2	0.095	1.00	65	74	74
3	0.140	1.00	66	73	73
4	0.130	1.00	65	73	73
5	0.060	1.00	67	73	73
6	0.065	1.00	67	74	73
7	0.050	1.00	66	74	74
8	0.065	1.00	66	75	74
9	0.075	1.00	67	76	75
10	0.065	1.00	67	76	75
11	0.075	1.00	68	76	75
12	0.090	1.00	68	77	76
13	0.085	1.00	67	78	76
14	0.070	1.00	68	79	77
15	0.065	1.00	69	80	77
16	0.100	1.00	69	79	77
17	0.110	1.00	69	80	78
18	0.115	1.00	68	81	78
19	0.145	1.00	68	82	79
20	0.135	1.00	69	83	80
21	0.155	1.00	62	81	80
22	0.095	1.00	64	82	80
23	0.150	1.00	63	83	81
24	0.125	1.00	63	84	81
25	0.120	1.00	63	84	82

Fraction	Final Wt. (g)	Tare Wt. (g)	Blank Wt. (g)	Net Wt. (g)
DRY CATCH	0.0000	0.0000	0.0000	0.0000
FILTER	0.0000	0.0000	0.0000	0.0000

Fraction	Final Wt. (g)	Tare Wt. (g)	Vol. (ml)	Net Wt. (g)
PROBE RINSE	0.0000	0.0000	0.0	0.0000
IMPINGERS	0.0000	0.0000	0.0	0.0000

Probe Rinse Blank (mg/ml)= 0.0000
Impinger Blank (mg/ml)= 0.0000

FILE NAME - HCSS8
RUN # - HCSS RUN 8
LOCATION - DERAMUS FIELD STATION
DATE - 3/29/93
PROJECT # - 9712M-51-16

PROG.=VER 06/09/89
03-31-1993 15:00:57

Initial Meter Volume (Cubic Feet)=	248.296
Final Meter Volume (Cubic Feet)=	283.540
Meter Factor=	1.019
Final Leak Rate (cu ft/min)=	0.005
Net Meter Volume (Cubic Feet)=	35.914
Gas Volume (Dry Standard Cubic Feet)=	33.994
Barometric Pressure (in Hg)=	28.84
Static Pressure (Inches H20)=	-0.47
Percent Oxygen=	20.5
Percent Carbon Dioxide=	0.0
Moisture Collected (ml)=	11.1
Percent Water=	1.5
Average Meter Temperature (F)=	79
Average Delta H (in H20)=	1.00
Average Delta P (in H20)=	0.108
Average Stack Temperature (F)=	66
Dry Molecular Weight=	28.82
Wet Molecular Weight=	28.66
Average Square Root of Delta P (in H20)=	0.3247
% Isokinetic=	97.0
Pitot Coefficient=	0.84
Sampling Time (Minutes)=	62.5
Nozzle Diameter (Inches)=	0.311
Stack Axis #1 (Inches)=	96.0
Stack Axis #2 (Inches)=	96.0
Rectangular Stack	
Stack Area (Square Feet)=	64.00
Stack Velocity (Actual, Feet/min)=	1,117
Flow Rate (Actual, Cubic ft/min)=	71,477
Flow rate (Standard, Wet, Cubic ft/min)=	69,044
Flow Rate (Standard, Dry, Cubic ft/min)=	67,999

Particulate Loading - Front Half

		Corr. to 7% O2	& 12% CO2
Particulate Weight (g)=	0.0000		
Particulate Loading, Dry Std. (gr/scf)=	0.0000	0.0000	0.0000
Particulate Loading, Actual (gr/cu ft)=	0.0000		
Emission Rate (lb/hr)=	0.00		

No Back Half Analysis

* * METRIC UNITS * *

FILE NAME - HCSS8
RUN # - HCSS RUN 8
LOCATION - DERAMUS FIELD STATION
DATE - 3/29/93
PROJECT # - 9712M-51-16

PROG.=VER 06/09/89
03-31-1993 15:00:57

Initial Meter Volume (Cubic Meters)=	7.031
Final Meter Volume (Cubic Meters)=	8.029
Meter Factor=	1.019
Final Leak Rate (cu m/min)=	0.0001
Net Meter Volume (Cubic Meters)=	1.017
Gas Volume (Dry Standard Cubic Meters)=	0.963
Barometric Pressure (mm Hg)=	733
Static Pressure (mm H20)=	-12
Percent Oxygen=	20.5
Percent Carbon Dioxide=	0.0
Moisture Collected (ml)=	11.1
Percent Water=	1.5
Average Meter Temperature (C)=	26
Average Delta H (mm H20)=	25.4
Average Delta P (mm H20)=	2.7
Average Stack Temperature (C)=	19
Dry Molecular Weight=	28.82
Wet Molecular Weight=	28.66
Average Square Root of Delta P (mm H20)=	1.6363
% Isokinetic=	97.0
Pitot Coefficient=	0.84
Sampling Time (Minutes)=	62.5
Nozzle Diameter (mm)=	7.90
Stack Axis #1 (Meters)=	2.438
Stack Axis #2 (Meters)=	2.438
Rectangular Stack	
Stack Area (Square Meters)=	5.946
Stack Velocity (Actual, m/min)=	340
Flow rate (Actual, Cubic m/min)=	2,024
Flow rate (Standard, Wet, Cubic m/min)=	1,955
Flow rate (Standard, Dry, Cubic m/min)=	1,926

Particulate Loading - Front Half

		Corr. to 7% O2	& 12% CO2
Particulate Weight (g)=	0.0000		
Particulate Loading, Dry Std. (mg/cu m)=	0.0	0.0	0.0
Particulate Loading, Actual (mg/cu m)=	0.0		
Emission Rate (kg/hr)=	0.00		

No Back Half Analysis

FILE NAME - HCSS8
RUN # - HCSS RUN 8
LOCATION - DERAMUS FIELD STATION
DATE - 3/29/93
PROJECT # - 9712M-51-16

PROG.=VER 06/09/89
03-31-1993 15:00:57

Point #	Delta P (in. H20)	Delta H (in. H20)	Stack T (F)	Meter T In(F)	Meter T Out(F)
1	0.100	1.00	64	75	75
2	0.115	1.00	65	75	75
3	0.140	1.00	66	75	75
4	0.155	1.00	65	75	75
5	0.120	1.00	65	76	75
6	0.100	1.00	66	76	75
7	0.125	1.00	67	77	75
8	0.160	1.00	67	78	75
9	0.165	1.00	67	78	75
10	0.135	1.00	67	79	75
11	0.100	1.00	67	78	76
12	0.060	1.00	67	80	76
13	0.105	1.00	67	81	77
14	0.140	1.00	68	82	77
15	0.100	1.00	69	84	77
16	0.075	1.00	70	80	78
17	0.065	1.00	69	83	78
18	0.085	1.00	69	84	78
19	0.075	1.00	69	85	79
20	0.045	1.00	69	86	79
21	0.125	1.00	61	81	80
22	0.170	1.00	63	85	80
23	0.095	1.00	63	86	81
24	0.075	1.00	62	87	81
25	0.075	1.00	64	88	81

Fraction	Final Wt. (g)	Tare Wt. (g)	Blank Wt. (g)	Net Wt. (g)
DRY CATCH	0.0000	0.0000	0.0000	0.0000
FILTER	0.0000	0.0000	0.0000	0.0000

Fraction	Final Wt. (g)	Tare Wt. (g)	Vol. (ml)	Net Wt. (g)
PROBE RINSE	0.0000	0.0000	0.0	0.0000
IMPINGERS	0.0000	0.0000	0.0	0.0000

Probe Rinse Blank (mg/ml)= 0.0000
Impinger Blank (mg/ml)= 0.0000

FILE NAME - HCSS9
RUN # - HCSS RUN NO. 9
LOCATION - DERAMUS FIELD STATION
DATE - 3/29/93
PROJECT # - 9712M-51-16

PROG.=VER 06/09/89
04-03-1993 15:09:31

Initial Meter Volume (Cubic Feet)=	287.288
Final Meter Volume (Cubic Feet)=	322.678
Meter Factor=	1.015
Final Leak Rate (cu ft/min)=	0.005
Net Meter Volume (Cubic Feet)=	35.921
Gas Volume (Dry Standard Cubic Feet)=	33.819
Barometric Pressure (in Hg)=	28.79
Static Pressure (Inches H20)=	-0.47
Percent Oxygen=	20.5
Percent Carbon Dioxide=	0.0
Moisture Collected (ml)=	15.1
Percent Water=	2.1
Average Meter Temperature (F)=	81
Average Delta H (in H20)=	1.00
Average Delta P (in H20)=	0.088
Average Stack Temperature (F)=	77
Dry Molecular Weight=	28.82
Wet Molecular Weight=	28.60
Average Square Root of Delta P (in H20)=	0.2939
% Isokinetic=	109.9
Pitot Coefficient=	0.83
Sampling Time (Minutes)=	62.5
Nozzle Diameter (Inches)=	0.310
Stack Axis #1 (Inches)=	96.0
Stack Axis #2 (Inches)=	96.0
Rectangular Stack	
Stack Area (Square Feet)=	64.00
Stack Velocity (Actual, Feet/min)=	1,015
Flow Rate (Actual, Cubic ft/min)=	64,985
Flow rate (Standard, Wet, Cubic ft/min)=	61,373
Flow Rate (Standard, Dry, Cubic ft/min)=	60,109

Particulate Loading - Front Half

		Corr. to 7% O2	& 12% CO2
Particulate Weight (g)=	0.0000		
Particulate Loading, Dry Std. (gr/scf)=	0.0000	0.0000	0.0000
Particulate Loading, Actual (gr/cu ft)=	0.0000		
Emission Rate (lb/hr)=	0.00		

No Back Half Analysis

* * METRIC UNITS * *

FILE NAME - HCSS9
RUN # - HCSS RUN NO. 9
LOCATION - DERAMUS FIELD STATION
DATE - 3/29/93
PROJECT # - 9712M-51-16

PROG.=VER 06/09/89
04-03-1993 15:09:32

Initial Meter Volume (Cubic Meters)=	8.135
Final Meter Volume (Cubic Meters)=	9.137
Meter Factor=	1.015
Final Leak Rate (cu m/min)=	0.0001
Net Meter Volume (Cubic Meters)=	1.017
Gas Volume (Dry Standard Cubic Meters)=	0.958
Barometric Pressure (mm Hg)=	731
Static Pressure (mm H20)=	-12
Percent Oxygen=	20.5
Percent Carbon Dioxide=	0.0
Moisture Collected (ml)=	15.1
Percent Water=	2.1
Average Meter Temperature (C)=	27
Average Delta H (mm H20)=	25.4
Average Delta P (mm H20)=	2.2
Average Stack Temperature (C)=	25
Dry Molecular Weight=	28.82
Wet Molecular Weight=	28.60
Average Square Root of Delta P (mm H20)=	1.4811
% Isokinetic=	109.9
Pitot Coefficient=	0.83
Sampling Time (Minutes)=	62.5
Nozzle Diameter (mm)=	7.87
Stack Axis #1 (Meters)=	2.438
Stack Axis #2 (Meters)=	2.438
Rectangular Stack	
Stack Area (Square Meters)=	5.946
Stack Velocity (Actual, m/min)=	309
Flow rate (Actual, Cubic m/min)=	1,840
Flow rate (Standard, Wet, Cubic m/min)=	1,738
Flow rate (Standard, Dry, Cubic m/min)=	1,702

Particulate Loading - Front Half

		Corr. to 7% O2	& 12% CO2
Particulate Weight (g)=	0.0000		
Particulate Loading, Dry Std. (mg/cu m)=	0.0	0.0	0.0
Particulate Loading, Actual (mg/cu m)=	0.0		
Emission Rate (kg/hr)=	0.00		

No Back Half Analysis

FILE NAME - HCSS9
RUN # - HCSS RUN NO. 9
LOCATION - DERAMUS FIELD STATION
DATE - 3/29/93
PROJECT # - 9712M-51-16

PROG.=VER 06/09/89
04-03-1993 15:09:32

Point #	Delta P (in. H20)	Delta H (in. H20)	Stack T (F)	Meter T In(F)	Meter T Out(F)
1	0.065	1.00	76	76	77
2	0.070	1.00	77	76	77
3	0.075	1.00	78	77	77
4	0.080	1.00	77	77	77
5	0.080	1.00	78	78	77
6	0.100	1.00	77	78	78
7	0.050	1.00	79	79	78
8	0.055	1.00	78	80	78
9	0.050	1.00	79	80	79
10	0.050	1.00	79	81	79
11	0.070	1.00	76	81	80
12	0.070	1.00	77	81	80
13	0.095	1.00	76	82	80
14	0.110	1.00	76	83	81
15	0.105	1.00	77	84	81
16	0.090	1.00	78	82	81
17	0.100	1.00	78	83	81
18	0.115	1.00	78	84	82
19	0.125	1.00	78	84	82
20	0.125	1.00	78	85	83
21	0.070	1.00	76	84	83
22	0.120	1.00	77	84	82
23	0.135	1.00	77	85	83
24	0.100	1.00	77	86	84
25	0.100	1.00	76	86	84

Fraction	Final Wt. (g)	Tare Wt. (g)	Blank Wt. (g)	Net Wt. (g)
DRY CATCH	0.0000	0.0000	0.0000	0.0000
FILTER	0.0000	0.0000	0.0000	0.0000

Fraction	Final Wt. (g)	Tare Wt. (g)	Vol. (ml)	Net Wt. (g)
PROBE RINSE	0.0000	0.0000	0.0	0.0000
IMPINGERS	0.0000	0.0000	0.0	0.0000

Probe Rinse Blank (mg/ml)= 0.0000
Impinger Blank (mg/ml)= 0.0000

FILE NAME - HCSS10
RUN # - HCSS RUN NO. 10
LOCATION - DERAMUS FIELD STATION
DATE - 3/29/93
PROJECT # - 9712M-51-16

PROG.=VER 06/09/89
04-01-1993 11:38:07

Initial Meter Volume (Cubic Feet)=	284.642
Final Meter Volume (Cubic Feet)=	320.527
Meter Factor=	1.019
Final Leak Rate (cu ft/min)=	0.003
Net Meter Volume (Cubic Feet)=	36.567
Gas Volume (Dry Standard Cubic Feet)=	34.435
Barometric Pressure (in Hg)=	28.79
Static Pressure (Inches H20)=	-0.47
Percent Oxygen=	20.5
Percent Carbon Dioxide=	0.0
Moisture Collected (ml)=	14.1
Percent Water=	1.9
Average Meter Temperature (F)=	81
Average Delta H (in H20)=	1.00
Average Delta P (in H20)=	0.108
Average Stack Temperature (F)=	77
Dry Molecular Weight=	28.82
Wet Molecular Weight=	28.62
Average Square Root of Delta P (in H20)=	0.3254
% Isokinetic=	99.5
Pitot Coefficient=	0.84
Sampling Time (Minutes)=	62.5
Nozzle Diameter (Inches)=	0.311
Stack Axis #1 (Inches)=	96.0
Stack Axis #2 (Inches)=	96.0
Rectangular Stack	
Stack Area (Square Feet)=	64.00
Stack Velocity (Actual, Feet/min)=	1,133
Flow Rate (Actual, Cubic ft/min)=	72,487
Flow rate (Standard, Wet, Cubic ft/min)=	68,478
Flow Rate (Standard, Dry, Cubic ft/min)=	67,182

Particulate Loading - Front Half

		Corr. to 7% O2	& 12% CO2
Particulate Weight (g)=	0.0000		
Particulate Loading, Dry Std. (gr/scf)=	0.0000	0.0000	0.0000
Particulate Loading, Actual (gr/cu ft)=	0.0000		
Emission Rate (lb/hr)=	0.00		

No Back Half Analysis

* * METRIC UNITS * *

FILE NAME - HCSS10
RUN # - HCSS RUN NO. 10
LOCATION - DERAMUS FIELD STATION
DATE - 3/29/93
PROJECT # - 9712M-51-16

PROG.=VER 06/09/89
04-01-1993 11:38:07

Initial Meter Volume (Cubic Meters)=	8.060
Final Meter Volume (Cubic Meters)=	9.076
Meter Factor=	1.019
Final Leak Rate (cu m/min)=	0.0001
Net Meter Volume (Cubic Meters)=	1.035
Gas Volume (Dry Standard Cubic Meters)=	0.975
Barometric Pressure (mm Hg)=	731
Static Pressure (mm H20)=	-12
Percent Oxygen=	20.5
Percent Carbon Dioxide=	0.0
Moisture Collected (ml)=	14.1
Percent Water=	1.9
Average Meter Temperature (C)=	27
Average Delta H (mm H20)=	25.4
Average Delta P (mm H20)=	2.7
Average Stack Temperature (C)=	25
Dry Molecular Weight=	28.82
Wet Molecular Weight=	28.62
Average Square Root of Delta P (mm H20)=	1.6399
% Isokinetic=	99.5
Pitot Coefficient=	0.84
Sampling Time (Minutes)=	62.5
Nozzle Diameter (mm)=	7.90
Stack Axis #1 (Meters)=	2.438
Stack Axis #2 (Meters)=	2.438
Rectangular Stack	
Stack Area (Square Meters)=	5.946
Stack Velocity (Actual, m/min)=	345
Flow rate (Actual, Cubic m/min)=	2,053
Flow rate (Standard, Wet, Cubic m/min)=	1,939
Flow rate (Standard, Dry, Cubic m/min)=	1,902

Particulate Loading - Front Half

		Corr. to 7% O2	& 12% CO2
Particulate Weight (g)=	0.0000		
Particulate Loading, Dry Std. (mg/cu m)=	0.0	0.0	0.0
Particulate Loading, Actual (mg/cu m)=	0.0		
Emission Rate (kg/hr)=	0.00		

No Back Half Analysis

FILE NAME - HCSS10
RUN # - HCSS RUN NO. 10
LOCATION - DERAMUS FIELD STATION
DATE - 3/29/93
PROJECT # - 9712M-51-16

PROG.=VER 06/09/89
04-01-1993 11:38:07

Point #	Delta P (in. H20)	Delta H (in. H20)	Stack T (F)	Meter T In(F)	Meter T Out(F)
1	0.095	1.00	77	75	75
2	0.150	1.00	77	77	76
3	0.145	1.00	78	77	76
4	0.155	1.00	77	79	76
5	0.130	1.00	79	80	76
6	0.100	1.00	78	79	77
7	0.140	1.00	79	80	77
8	0.130	1.00	77	82	77
9	0.150	1.00	77	80	77
10	0.110	1.00	78	83	78
11	0.110	1.00	77	80	79
12	0.085	1.00	76	82	79
13	0.110	1.00	77	84	79
14	0.075	1.00	76	85	79
15	0.075	1.00	77	86	80
16	0.070	1.00	77	82	80
17	0.055	1.00	78	84	80
18	0.075	1.00	77	85	80
19	0.080	1.00	77	86	81
20	0.055	1.00	78	87	81
21	0.120	1.00	75	84	81
22	0.155	1.00	75	85	81
23	0.120	1.00	78	86	82
24	0.120	1.00	77	87	82
25	0.095	1.00	77	88	82

Fraction	Final Wt. (g)	Tare Wt. (g)	Blank Wt. (g)	Net Wt. (g)
DRY CATCH	0.0000	0.0000	0.0000	0.0000
FILTER	0.0000	0.0000	0.0000	0.0000

Fraction	Final Wt. (g)	Tare Wt. (g)	Vol. (ml)	Net Wt. (g)
PROBE RINSE	0.0000	0.0000	0.0	0.0000
IMPINGERS	0.0000	0.0000	0.0	0.0000

Probe Rinse Blank (mg/ml)= 0.0000
Impinger Blank (mg/ml)= 0.0000

FILE NAME - HCSS11
RUN # - HCSS RUN NO. 11
LOCATION - DERAMUS FIELD STATION
DATE - 3/30/93
PROJECT # - 9712M-51-16

PROG.=VER 06/09/89
04-01-1993 11:39:00

Initial Meter Volume (Cubic Feet)=	322.833
Final Meter Volume (Cubic Feet)=	357.783
Meter Factor=	1.015
Final Leak Rate (cu ft/min)=	0.005
Net Meter Volume (Cubic Feet)=	35.474
Gas Volume (Dry Standard Cubic Feet)=	33.901
Barometric Pressure (in Hg)=	28.66
Static Pressure (Inches H20)=	-0.47
Percent Oxygen=	20.5
Percent Carbon Dioxide=	0.0
Moisture Collected (ml)=	12.4
Percent Water=	1.7
Average Meter Temperature (F)=	70
Average Delta H (in H20)=	1.00
Average Delta P (in H20)=	0.091
Average Stack Temperature (F)=	66
Dry Molecular Weight=	28.82
Wet Molecular Weight=	28.64
Average Square Root of Delta P (in H20)=	0.2971
% Isokinetic=	107.7
Pitot Coefficient=	0.83
Sampling Time (Minutes)=	62.5
Nozzle Diameter (Inches)=	0.310
Stack Axis #1 (Inches)=	96.0
Stack Axis #2 (Inches)=	96.0
Rectangular Stack	
Stack Area (Square Feet)=	64.00
Stack Velocity (Actual, Feet/min)=	1,017
Flow Rate (Actual, Cubic ft/min)=	65,100
Flow rate (Standard, Wet, Cubic ft/min)=	62,548
Flow Rate (Standard, Dry, Cubic ft/min)=	61,489

Particulate Loading - Front Half

		Corr. to 7% O2	& 12% CO2
Particulate Weight (g)=	0.0000		
Particulate Loading, Dry Std. (gr/scf)=	0.0000	0.0000	0.0000
Particulate Loading, Actual (gr/cu ft)=	0.0000		
Emission Rate (lb/hr)=	0.00		

No Back Half Analysis

* * METRIC UNITS * *

FILE NAME - HCSS11
RUN # - HCSS RUN NO. 11
LOCATION - DERAMUS FIELD STATION
DATE - 3/30/93
PROJECT # - 9712M-51-16

PROG.=VER 06/09/89
04-01-1993 11:39:00

Initial Meter Volume (Cubic Meters)=	9.141
Final Meter Volume (Cubic Meters)=	10.131
Meter Factor=	1.015
Final Leak Rate (cu m/min)=	0.0001
Net Meter Volume (Cubic Meters)=	1.004
Gas Volume (Dry Standard Cubic Meters)=	0.960
Barometric Pressure (mm Hg)=	728
Static Pressure (mm H20)=	-12
Percent Oxygen=	20.5
Percent Carbon Dioxide=	0.0
Moisture Collected (ml)=	12.4
Percent Water=	1.7
Average Meter Temperature (C)=	21
Average Delta H (mm H20)=	25.4
Average Delta P (mm H20)=	2.3
Average Stack Temperature (C)=	19
Dry Molecular Weight=	28.82
Wet Molecular Weight=	28.64
Average Square Root of Delta P (mm H20)=	1.4976
% Isokinetic=	107.7
Pitot Coefficient=	0.83
Sampling Time (Minutes)=	62.5
Nozzle Diameter (mm)=	7.87
Stack Axis #1 (Meters)=	2.438
Stack Axis #2 (Meters)=	2.438
Rectangular Stack	
Stack Area (Square Meters)=	5.946
Stack Velocity (Actual, m/min)=	310
Flow rate (Actual, Cubic m/min)=	1,843
Flow rate (Standard, Wet, Cubic m/min)=	1,771
Flow rate (Standard, Dry, Cubic m/min)=	1,741

Particulate Loading - Front Half

		Corr. to 7% O2	& 12% CO2
Particulate Weight (g)=	0.0000		
Particulate Loading, Dry Std. (mg/cu m)=	0.0	0.0	0.0
Particulate Loading, Actual (mg/cu m)=	0.0		
Emission Rate (kg/hr)=	0.00		

No Back Half Analysis

FILE NAME - HCSS11
RUN # - HCSS RUN NO. 11
LOCATION - DERAMUS FIELD STATION
DATE - 3/30/93
PROJECT # - 9712M-51-16

PROG.=VER 06/09/89
04-01-1993 11:39:00

Point #	Delta P (in. H20)	Delta H (in. H20)	Stack T (F)	Meter T In(F)	Meter T Out(F)
1	0.075	1.00	65	64	63
2	0.060	1.00	66	64	63
3	0.105	1.00	65	64	63
4	0.095	1.00	65	64	63
5	0.065	1.00	66	65	64
6	0.050	1.00	65	66	65
7	0.050	1.00	65	67	66
8	0.060	1.00	65	68	66
9	0.060	1.00	65	69	67
10	0.050	1.00	65	70	68
11	0.070	1.00	66	70	68
12	0.080	1.00	66	71	69
13	0.080	1.00	67	72	69
14	0.095	1.00	66	73	70
15	0.095	1.00	67	74	70
16	0.095	1.00	66	73	71
17	0.100	1.00	66	74	72
18	0.130	1.00	66	75	73
19	0.140	1.00	67	76	73
20	0.085	1.00	66	77	74
21	0.085	1.00	67	76	74
22	0.130	1.00	66	77	75
23	0.145	1.00	65	78	75
24	0.160	1.00	66	79	76
25	0.110	1.00	65	80	76

Fraction	Final Wt. (g)	Tare Wt. (g)	Blank Wt. (g)	Net Wt. (g)
DRY CATCH	0.0000	0.0000	0.0000	0.0000
FILTER	0.0000	0.0000	0.0000	0.0000

Fraction	Final Wt. (g)	Tare Wt. (g)	Vol. (ml)	Net Wt. (g)
PROBE RINSE	0.0000	0.0000	0.0	0.0000
IMPINGERS	0.0000	0.0000	0.0	0.0000

Probe Rinse Blank (mg/ml)= 0.0000
Impinger Blank (mg/ml)= 0.0000

FILE NAME - HCSS12
RUN # - HCSS RUN NO. 12
LOCATION - DERAMUS FIELD STATION
DATE - 3/30/93
PROJECT # - 9712M-51-16

PROG.=VER 06/09/89
04-01-1993 11:39:18

Initial Meter Volume (Cubic Feet)=	321.506
Final Meter Volume (Cubic Feet)=	357.962
Meter Factor=	1.019
Final Leak Rate (cu ft/min)=	0.005
Net Meter Volume (Cubic Feet)=	37.149
Gas Volume (Dry Standard Cubic Feet)=	35.367
Barometric Pressure (in Hg)=	28.66
Static Pressure (Inches H20)=	-0.47
Percent Oxygen=	20.5
Percent Carbon Dioxide=	0.0
Moisture Collected (ml)=	10.0
Percent Water=	1.3
Average Meter Temperature (F)=	72
Average Delta H (in H20)=	1.00
Average Delta P (in H20)=	0.094
Average Stack Temperature (F)=	65
Dry Molecular Weight=	28.82
Wet Molecular Weight=	28.68
Average Square Root of Delta P (in H20)=	0.3022
% Isokinetic=	108.5
Pitot Coefficient=	0.84
Sampling Time (Minutes)=	62.5
Nozzle Diameter (Inches)=	0.311
Stack Axis #1 (Inches)=	96.0
Stack Axis #2 (Inches)=	96.0
Rectangular Stack	
Stack Area (Square Feet)=	64.00
Stack Velocity (Actual, Feet/min)=	1,042
Flow Rate (Actual, Cubic ft/min)=	66,658
Flow rate (Standard, Wet, Cubic ft/min)=	64,089
Flow Rate (Standard, Dry, Cubic ft/min)=	63,247

Particulate Loading - Front Half

		Corr. to 7% O2	& 12% CO2
Particulate Weight (g)=	0.0000		
Particulate Loading, Dry Std. (gr/scf)=	0.0000	0.0000	0.0000
Particulate Loading, Actual (gr/cu ft)=	0.0000		
Emission Rate (lb/hr)=	0.00		

No Back Half Analysis

* * METRIC UNITS * *

FILE NAME - HCSS12
RUN # - HCSS RUN NO. 12
LOCATION - DERAMUS FIELD STATION
DATE - 3/30/93
PROJECT # - 9712M-51-16

PROG.=VER 06/09/89
04-01-1993 11:39:18

Initial Meter Volume (Cubic Meters)=	9.104
Final Meter Volume (Cubic Meters)=	10.136
Meter Factor=	1.019
Final Leak Rate (cu m/min)=	0.0001
Net Meter Volume (Cubic Meters)=	1.052
Gas Volume (Dry Standard Cubic Meters)=	1.001
Barometric Pressure (mm Hg)=	728
Static Pressure (mm H20)=	-12
Percent Oxygen=	20.5
Percent Carbon Dioxide=	0.0
Moisture Collected (ml)=	10.0
Percent Water=	1.3
Average Meter Temperature (C)=	22
Average Delta H (mm H20)=	25.4
Average Delta P (mm H20)=	2.4
Average Stack Temperature (C)=	19
Dry Molecular Weight=	28.82
Wet Molecular Weight=	28.68
Average Square Root of Delta P (mm H20)=	1.5230
% Isokinetic=	108.5
Pitot Coefficient=	0.84
Sampling Time (Minutes)=	62.5
Nozzle Diameter (mm)=	7.90
Stack Axis #1 (Meters)=	2.438
Stack Axis #2 (Meters)=	2.438
Rectangular Stack Stack Area (Square Meters)=	5.946
Stack Velocity (Actual, m/min)=	317
Flow rate (Actual, Cubic m/min)=	1,888
Flow rate (Standard, Wet, Cubic m/min)=	1,815
Flow rate (Standard, Dry, Cubic m/min)=	1,791

Particulate Loading - Front Half

		Corr. to 7% O2	& 12% CO2
Particulate Weight (g)=	0.0000		
Particulate Loading, Dry Std. (mg/cu m)=	0.0	0.0	0.0
Particulate Loading, Actual (mg/cu m)=	0.0		
Emission Rate (kg/hr)=	0.00		

No Back Half Analysis

FILE NAME - HCSS12
RUN # - HCSS RUN NO. 12
LOCATION - DERAMUS FIELD STATION
DATE - 3/30/93
PROJECT # - 9712M-51-16

PROG.=VER 06/09/89
04-01-1993 11:39:19

Point #	Delta P (in. H20)	Delta H (in. H20)	Stack T (F)	Meter T In(F)	Meter T Out(F)
1	0.080	1.00	65	65	65
2	0.120	1.00	65	65	65
3	0.170	1.00	65	66	65
4	0.160	1.00	65	67	65
5	0.130	1.00	66	69	66
6	0.080	1.00	66	68	66
7	0.105	1.00	65	70	66
8	0.140	1.00	65	71	67
9	0.135	1.00	65	72	67
10	0.095	1.00	64	74	67
11	0.065	1.00	66	71	69
12	0.085	1.00	65	75	69
13	0.105	1.00	65	76	70
14	0.075	1.00	65	77	70
15	0.065	1.00	66	79	71
16	0.060	1.00	66	75	72
17	0.045	1.00	67	78	73
18	0.055	1.00	66	78	73
19	0.065	1.00	66	80	73
20	0.065	1.00	66	82	74
21	0.090	1.00	65	80	75
22	0.095	1.00	65	81	75
23	0.115	1.00	65	82	76
24	0.075	1.00	66	83	76
25	0.075	1.00	65	84	77

Fraction	Final Wt. (g)	Tare Wt. (g)	Blank Wt. (g)	Net Wt. (g)
DRY CATCH	0.0000	0.0000	0.0000	0.0000
FILTER	0.0000	0.0000	0.0000	0.0000

Fraction	Final Wt. (g)	Tare Wt. (g)	Vol. (ml)	Net Wt. (g)
PROBE RINSE	0.0000	0.0000	0.0	0.0000
IMPINGERS	0.0000	0.0000	0.0	0.0000

Probe Rinse Blank (mg/ml)= 0.0000
Impinger Blank (mg/ml)= 0.0000

FILE NAME - HCSS13
RUN # - HCSS RUN NO.13
LOCATION - DERAMUS FIELD STATION
DATE - 3/30/93
PROJECT # - 9712M-51-16

PROG.=VER 06/09/89
04-03-1993 15:39:14

Initial Meter Volume (Cubic Feet)=	358.058	
Final Meter Volume (Cubic Feet)=	393.546	
Meter Factor=	1.015	
Final Leak Rate (cu ft/min)=	0.008	
Net Meter Volume (Cubic Feet)=	36.020	
Gas Volume (Dry Standard Cubic Feet)=	33.925	
Barometric Pressure (in Hg)=	28.60	
Static Pressure (Inches H20)=	-0.55	
Percent Oxygen=	20.5	
Percent Carbon Dioxide=	0.0	
Moisture Collected (ml)=	20.3	
Percent Water=	2.1	**Saturated Stack**
Average Meter Temperature (F)=	77	
Average Delta H (in H20)=	1.00	
Average Delta P (in H20)=	0.208	
Average Stack Temperature (F)=	64	
Dry Molecular Weight=	28.82	
Wet Molecular Weight=	28.59	
Average Square Root of Delta P (in H20)=	0.4487	
% Isokinetic=	111.0	
Pitot Coefficient=	0.83	
Sampling Time (Minutes)=	62.5	
Nozzle Diameter (Inches)=	0.249	
Stack Axis #1 (Inches)=	96.0	
Stack Axis #2 (Inches)=	96.0	
Rectangular Stack		
Stack Area (Square Feet)=	64.00	
Stack Velocity (Actual, Feet/min)=	1,537	
Flow Rate (Actual, Cubic ft/min)=	98,388	
Flow rate (Standard, Wet, Cubic ft/min)=	94,545	
Flow Rate (Standard, Dry, Cubic ft/min)=	92,523	

Particulate Loading - Front Half

Particulate Weight (g)=	0.0000	Corr. to 7% O2 & 12% CO2
Particulate Loading, Dry Std. (gr/scf)=	0.0000	0.0000 0.0000
Particulate Loading, Actual (gr/cu ft)=	0.0000	
Emission Rate (lb/hr)=	0.00	

No Back Half Analysis

* * METRIC UNITS * *

FILE NAME - HCSS13
RUN # - HCSS RUN NO.13
LOCATION - DERAMUS FIELD STATION
DATE - 3/30/93
PROJECT # - 9712M-51-16

PROG.=VER 06/09/89
04-03-1993 15:39:14

Initial Meter Volume (Cubic Meters)=	10.139	
Final Meter Volume (Cubic Meters)=	11.144	
Meter Factor=	1.015	
Final Leak Rate (cu m/min)=	0.0002	
Net Meter Volume (Cubic Meters)=	1.020	
Gas Volume (Dry Standard Cubic Meters)=	0.961	
Barometric Pressure (mm Hg)=	726	
Static Pressure (mm H20)=	-14	
Percent Oxygen=	20.5	
Percent Carbon Dioxide=	0.0	
Moisture Collected (ml)=	20.3	
Percent Water=	2.1	**Saturated Stack**
Average Meter Temperature (C)=	25	
Average Delta H (mm H20)=	25.4	
Average Delta P (mm H20)=	5.3	
Average Stack Temperature (C)=	18	
Dry Molecular Weight=	28.82	
Wet Molecular Weight=	28.59	
Average Square Root of Delta P (mm H20)=	2.2616	
% Isokinetic=	111.0	
Pitot Coefficient=	0.83	
Sampling Time (Minutes)=	62.5	
Nozzle Diameter (mm)=	6.32	
Stack Axis #1 (Meters)=	2.438	
Stack Axis #2 (Meters)=	2.438	
Rectangular Stack		
Stack Area (Square Meters)=	5.946	
Stack Velocity (Actual, m/min)=	469	
Flow rate (Actual, Cubic m/min)=	2,786	
Flow rate (Standard, Wet, Cubic m/min)=	2,677	
Flow rate (Standard, Dry, Cubic m/min)=	2,620	

Particulate Loading - Front Half

Particulate Weight (g)=	0.0000	Corr. to 7% O2 & 12% CO2
Particulate Loading, Dry Std. (mg/cu m)=	0.0	0.0 0.0
Particulate Loading, Actual (mg/cu m)=	0.0	
Emission Rate (kg/hr)=	0.00	

No Back Half Analysis

FILE NAME - HCSS13
RUN # - HCSS RUN NO.13
LOCATION - DERAMUS FIELD STATION
DATE - 3/30/93
PROJECT # - 9712M-51-16

PROG.=VER 06/09/89
04-03-1993 15:39:14

Point #	Delta P (in. H20)	Delta H (in. H20)	Stack T (F)	Meter T In(F)	Meter T Out(F)
1	0.160	1.00	68	74	74
2	0.220	1.00	65	74	74
3	0.260	1.00	65	75	75
4	0.230	1.00	65	75	75
5	0.140	1.00	62	76	75
6	0.070	1.00	62	76	75
7	0.110	1.00	62	76	75
8	0.110	1.00	62	77	76
9	0.170	1.00	63	78	77
10	0.120	1.00	64	78	77
11	0.150	1.00	65	77	76
12	0.170	1.00	65	76	76
13	0.200	1.00	65	77	76
14	0.220	1.00	65	77	76
15	0.170	1.00	65	78	77
16	0.290	1.00	64	77	77
17	0.330	1.00	64	78	77
18	0.350	1.00	64	79	77
19	0.360	1.00	64	80	78
20	0.220	1.00	64	80	78
21	0.180	1.00	66	79	78
22	0.250	1.00	66	79	78
23	0.210	1.00	66	80	78
24	0.310	1.00	66	81	79
25	0.210	1.00	65	82	79

Fraction	Final Wt. (g)	Tare Wt. (g)	Blank Wt. (g)	Net Wt. (g)
DRY CATCH	0.0000	0.0000	0.0000	0.0000
FILTER	0.0000	0.0000	0.0000	0.0000

Fraction	Final Wt. (g)	Tare Wt. (g)	Vol. (ml)	Net Wt. (g)
PROBE RINSE	0.0000	0.0000	0.0	0.0000
IMPINGERS	0.0000	0.0000	0.0	0.0000

Probe Rinse Blank (mg/ml)= 0.0000
Impinger Blank (mg/ml)= 0.0000

FILE NAME - HCSS14
RUN # - HCSS RUN NO. 14
LOCATION - DERAMUS FIELD STATION
DATE - 3/30/93
PROJECT # - 9712M-51-16

PROG.=VER 06/09/89
04-03-1993 15:39:35

Initial Meter Volume (Cubic Feet)=	358.857	
Final Meter Volume (Cubic Feet)=	394.539	
Meter Factor=	1.019	
Final Leak Rate (cu ft/min)=	0.003	
Net Meter Volume (Cubic Feet)=	36.360	
Gas Volume (Dry Standard Cubic Feet)=	34.113	
Barometric Pressure (in Hg)=	28.60	
Static Pressure (Inches H20)=	-0.55	
Percent Oxygen=	20.5	
Percent Carbon Dioxide=	0.0	
Moisture Collected (ml)=	19.7	
Percent Water=	2.0	**Saturated Stack**
Average Meter Temperature (F)=	79	
Average Delta H (in H20)=	1.00	
Average Delta P (in H20)=	0.198	
Average Stack Temperature (F)=	63	
Dry Molecular Weight=	28.82	
Wet Molecular Weight=	28.60	
Average Square Root of Delta P (in H20)=	0.4391	
% Isokinetic=	113.0	
Pitot Coefficient=	0.84	
Sampling Time (Minutes)=	62.5	
Nozzle Diameter (Inches)=	0.249	
Stack Axis #1 (Inches)=	96.0	
Stack Axis #2 (Inches)=	96.0	
Rectangular Stack		
Stack Area (Square Feet)=	64.00	
Stack Velocity (Actual, Feet/min)=	1,514	
Flow Rate (Actual, Cubic ft/min)=	96,901	
Flow rate (Standard, Wet, Cubic ft/min)=	93,336	
Flow Rate (Standard, Dry, Cubic ft/min)=	91,425	

Particulate Loading - Front Half

		Corr. to 7% O2	& 12% CO2
Particulate Weight (g)=	0.0000		
Particulate Loading, Dry Std. (gr/scf)=	0.0000	0.0000	0.0000
Particulate Loading, Actual (gr/cu ft)=	0.0000		
Emission Rate (lb/hr)=	0.00		

No Back Half Analysis

* * METRIC UNITS * *

FILE NAME - HCSS14
RUN # - HCSS RUN NO. 14
LOCATION - DERAMUS FIELD STATION
DATE - 3/30/93
PROJECT # - 9712M-51-16

PROG.=VER 06/09/89
04-03-1993 15:39:38

Initial Meter Volume (Cubic Meters)=	10.161	
Final Meter Volume (Cubic Meters)=	11.172	
Meter Factor=	1.019	
Final Leak Rate (cu m/min)=	0.0001	
Net Meter Volume (Cubic Meters)=	1.030	
Gas Volume (Dry Standard Cubic Meters)=	0.966	
Barometric Pressure (mm Hg)=	726	
Static Pressure (mm H20)=	-14	
Percent Oxygen=	20.5	
Percent Carbon Dioxide=	0.0	
Moisture Collected (ml)=	19.7	
Percent Water=	2.0	**Saturated Stack**
Average Meter Temperature (C)=	26	
Average Delta H (mm H20)=	25.4	
Average Delta P (mm H20)=	5.0	
Average Stack Temperature (C)=	17	
Dry Molecular Weight=	28.82	
Wet Molecular Weight=	28.60	
Average Square Root of Delta P (mm H20)=	2.2129	
% Isokinetic=	113.0	
Pitot Coefficient=	0.84	
Sampling Time (Minutes)=	62.5	
Nozzle Diameter (mm)=	6.32	
Stack Axis #1 (Meters)=	2.438	
Stack Axis #2 (Meters)=	2.438	
Rectangular Stack		
Stack Area (Square Meters)=	5.946	
Stack Velocity (Actual, m/min)=	461	
Flow rate (Actual, Cubic m/min)=	2,744	
Flow rate (Standard, Wet, Cubic m/min)=	2,643	
Flow rate (Standard, Dry, Cubic m/min)=	2,589	

Particulate Loading - Front Half

		Corr. to 7% O2	& 12% CO2
Particulate Weight (g)=	0.0000		
Particulate Loading, Dry Std. (mg/cu m)=	0.0	0.0	0.0
Particulate Loading, Actual (mg/cu m)=	0.0		
Emission Rate (kg/hr)=	0.00		

No Back Half Analysis

FILE NAME - HCSS14
RUN # - HCSS RUN NO. 14
LOCATION - DERAMUS FIELD STATION
DATE - 3/30/93
PROJECT # - 9712M-51-16

PROG.=VER 06/09/89
04-03-1993 15:39:45

Point #	Delta P (in. H20)	Delta H (in. H20)	Stack T (F)	Meter T In(F)	Meter T Out(F)
1	0.170	1.00	64	75	75
2	0.180	1.00	64	75	75
3	0.190	1.00	65	77	75
4	0.420	1.00	65	78	75
5	0.210	1.00	63	79	76
6	0.270	1.00	61	77	76
7	0.260	1.00	62	80	76
8	0.290	1.00	61	81	77
9	0.270	1.00	61	82	77
10	0.240	1.00	62	83	78
11	0.170	1.00	64	79	78
12	0.150	1.00	63	79	78
13	0.190	1.00	62	80	78
14	0.170	1.00	62	81	78
15	0.150	1.00	63	82	78
16	0.160	1.00	63	79	78
17	0.070	1.00	62	81	78
18	0.150	1.00	62	83	78
19	0.130	1.00	62	84	78
20	0.100	1.00	61	84	78
21	0.210	1.00	67	81	79
22	0.210	1.00	66	83	80
23	0.200	1.00	66	84	79
24	0.220	1.00	65	85	80
25	0.180	1.00	65	86	80

Fraction	Final Wt. (g)	Tare Wt. (g)	Blank Wt. (g)	Net Wt. (g)
DRY CATCH	0.0000	0.0000	0.0000	0.0000
FILTER	0.0000	0.0000	0.0000	0.0000

Fraction	Final Wt. (g)	Tare Wt. (g)	Vol. (ml)	Net Wt. (g)
PROBE RINSE	0.0000	0.0000	0.0	0.0000
IMPINGERS	0.0000	0.0000	0.0	0.0000

Probe Rinse Blank (mg/ml) = 0.0000
Impinger Blank (mg/ml) = 0.0000

FILE NAME - HCSS15
RUN # - HCSS RUN #15
LOCATION - DERAMUS FIELD STATION
DATE - 4/2/93
PROJECT # - 9712M-51-16

PROG.=VER 06/09/89
04-08-1993 13:46:36

Initial Meter Volume (Cubic Feet)=	397.632	
Final Meter Volume (Cubic Feet)=	441.503	
Meter Factor=	1.015	
Final Leak Rate (cu ft/min)=	0.005	
Net Meter Volume (Cubic Feet)=	44.529	
Gas Volume (Dry Standard Cubic Feet)=	43.333	
Barometric Pressure (in Hg)=	29.00	
Static Pressure (Inches H20)=	-0.13	
Percent Oxygen=	20.5	
Percent Carbon Dioxide=	0.0	
Moisture Collected (ml)=	11.6	
Percent Water=	0.8	**Saturated Stack**
Average Meter Temperature (F)=	68	
Average Delta H (in H20)=	2.00	
Average Delta P (in H20)=	0.020	
Average Stack Temperature (F)=	38	
Dry Molecular Weight=	28.82	
Wet Molecular Weight=	28.73	
Average Square Root of Delta P (in H20)=	0.1401	
% Isokinetic=	110.0	
Pitot Coefficient=	0.82	
Sampling Time (Minutes)=	62.5	
Nozzle Diameter (Inches)=	0.500	
Stack Axis #1 (Inches)=	96.0	
Stack Axis #2 (Inches)=	96.0	
Rectangular Stack		
Stack Area (Square Feet)=	64.00	
Stack Velocity (Actual, Feet/min)=	453	
Flow Rate (Actual, Cubic ft/min)=	29,020	
Flow rate (Standard, Wet, Cubic ft/min)=	29,809	
Flow Rate (Standard, Dry, Cubic ft/min)=	29,574	

Particulate Loading - Front Half

		Corr. to 7% O2	& 12% CO2
Particulate Weight (g)=	0.0000		
Particulate Loading, Dry Std. (gr/scf)=	0.0000	0.0000	0.0000
Particulate Loading, Actual (gr/cu ft)=	0.0000		
Emission Rate (lb/hr)=	0.00		

No Back Half Analysis

* * METRIC UNITS * *

FILE NAME - HCSS15
RUN # - HCSS RUN #15
LOCATION - DERAMUS FIELD STATION
DATE - 4/2/93
PROJECT # - 9712M-51-16

PROG.=VER 06/09/89
04-08-1993 13:46:36

Initial Meter Volume (Cubic Meters)=	11.259	
Final Meter Volume (Cubic Meters)=	12.502	
Meter Factor=	1.015	
Final Leak Rate (cu m/min)=	0.0001	
Net Meter Volume (Cubic Meters)=	1.261	
Gas Volume (Dry Standard Cubic Meters)=	1.227	
Barometric Pressure (mm Hg)=	737	
Static Pressure (mm H20)=	-3	
Percent Oxygen=	20.5	
Percent Carbon Dioxide=	0.0	
Moisture Collected (ml)=	11.6	
Percent Water=	0.8	**Saturated Stack**
Average Meter Temperature (C)=	20	
Average Delta H (mm H20)=	50.8	
Average Delta P (mm H20)=	0.5	
Average Stack Temperature (C)=	3	
Dry Molecular Weight=	28.82	
Wet Molecular Weight=	28.73	
Average Square Root of Delta P (mm H20)=	0.7063	
% Isokinetic=	110.0	
Pitot Coefficient=	0.82	
Sampling Time (Minutes)=	62.5	
Nozzle Diameter (mm)=	12.70	
Stack Axis #1 (Meters)=	2.438	
Stack Axis #2 (Meters)=	2.438	
Rectangular Stack		
Stack Area (Square Meters)=	5.946	
Stack Velocity (Actual, m/min)=	138	
Flow rate (Actual, Cubic m/min)=	822	
Flow rate (Standard, Wet, Cubic m/min)=	844	
Flow rate (Standard, Dry, Cubic m/min)=	837	

Particulate Loading - Front Half

Particulate Weight (g)=	0.0000	Corr. to 7% O2 & 12% CO2
Particulate Loading, Dry Std. (mg/cu m)=	0.0	0.0 0.0
Particulate Loading, Actual (mg/cu m)=	0.0	
Emission Rate (kg/hr)=	0.00	

No Back Half Analysis

FILE NAME - HCSS15
RUN # - HCSS RUN #15
LOCATION - DERAMUS FIELD STATION
DATE - 4/2/93
PROJECT # - 9712M-51-16

PROG.=VER 06/09/89
04-08-1993 13:46:37

Point #	Delta P (in. H20)	Delta H (in. H20)	Stack T (F)	Meter T In(F)	Meter T Out(F)
1	0.035	2.00	37	59	59
2	0.020	2.00	37	59	60
3	0.030	2.00	36	60	59
4	0.030	2.00	37	60	60
5	0.015	2.00	36	64	63
6	0.015	2.00	36	64	63
7	0.015	2.00	38	64	63
8	0.010	2.00	38	65	63
9	0.020	2.00	39	67	64
10	0.010	2.00	38	68	65
11	0.020	2.00	39	68	66
12	0.015	2.00	39	69	66
13	0.025	2.00	43	70	67
14	0.020	2.00	41	72	68
15	0.015	2.00	40	73	68
16	0.020	2.00	41	71	70
17	0.020	2.00	41	72	70
18	0.030	2.00	40	74	71
19	0.020	2.00	41	75	71
20	0.015	2.00	40	76	72
21	0.015	2.00	34	75	73
22	0.015	2.00	35	76	74
23	0.030	2.00	35	78	74
24	0.030	2.00	35	79	75
25	0.015	2.00	35	79	76

Fraction	Final Wt. (g)	Tare Wt. (g)	Blank Wt. (g)	Net Wt. (g)
DRY CATCH	0.0000	0.0000	0.0000	0.0000
FILTER	0.0000	0.0000	0.0000	0.0000

Fraction	Final Wt. (g)	Tare Wt. (g)	Vol. (ml)	Net Wt. (g)
PROBE RINSE	0.0000	0.0000	0.0	0.0000
IMPINGERS	0.0000	0.0000	0.0	0.0000

Probe Rinse Blank (mg/ml)= 0.0000
Impinger Blank (mg/ml)= 0.0000

FILE NAME - HCSS16
RUN # - HCSS RUN NO. 16
LOCATION - DERAMUS FIELD STATION
DATE - 4/2/93
PROJECT # - 9712M-51-16

PROG.=VER 06/09/89
04-08-1993 13:55:19

Initial Meter Volume (Cubic Feet)=	396.752
Final Meter Volume (Cubic Feet)=	441.755
Meter Factor=	1.019
Final Leak Rate (cu ft/min)=	0.015
Net Meter Volume (Cubic Feet)=	45.858
Gas Volume (Dry Standard Cubic Feet)=	44.440
Barometric Pressure (in Hg)=	29.00
Static Pressure (Inches H20)=	-0.13
Percent Oxygen=	20.5
Percent Carbon Dioxide=	0.0
Moisture Collected (ml)=	4.8
Percent Water=	0.5
Average Meter Temperature (F)=	70
Average Delta H (in H20)=	1.94
Average Delta P (in H20)=	0.020
Average Stack Temperature (F)=	39
Dry Molecular Weight=	28.82
Wet Molecular Weight=	28.77
Average Square Root of Delta P (in H20)=	0.1385
% Isokinetic=	111.6
Pitot Coefficient=	0.83
Sampling Time (Minutes)=	62.5
Nozzle Diameter (Inches)=	0.500
Stack Axis #1 (Inches)=	96.0
Stack Axis #2 (Inches)=	96.0
Rectangular Stack	
Stack Area (Square Feet)=	64.00
Stack Velocity (Actual, Feet/min)=	458
Flow Rate (Actual, Cubic ft/min)=	29,313
Flow rate (Standard, Wet, Cubic ft/min)=	30,070
Flow Rate (Standard, Dry, Cubic ft/min)=	29,918

Particulate Loading - Front Half

		Corr. to 7% O2	& 12% CO2
Particulate Weight (g)=	0.0000		
Particulate Loading, Dry Std. (gr/scf)=	0.0000	0.0000	0.0000
Particulate Loading, Actual (gr/cu ft)=	0.0000		
Emission Rate (lb/hr)=	0.00		

No Back Half Analysis

* * METRIC UNITS * *

FILE NAME - HCSS16
RUN # - HCSS RUN NO. 16
LOCATION - DERAMUS FIELD STATION
DATE - 4/2/93
PROJECT # - 9712M-51-16

PROG.=VER 06/09/89
04-08-1993 13:55:20

Initial Meter Volume (Cubic Meters)=	11.234
Final Meter Volume (Cubic Meters)=	12.509
Meter Factor=	1.019
Final Leak Rate (cu m/min)=	0.0004
Net Meter Volume (Cubic Meters)=	1.299
Gas Volume (Dry Standard Cubic Meters)=	1.258
Barometric Pressure (mm Hg)=	737
Static Pressure (mm H20)=	-3
Percent Oxygen=	20.5
Percent Carbon Dioxide=	0.0
Moisture Collected (ml)=	4.8
Percent Water=	0.5
Average Meter Temperature (C)=	21
Average Delta H (mm H20)=	49.3
Average Delta P (mm H20)=	0.5
Average Stack Temperature (C)=	4
Dry Molecular Weight=	28.82
Wet Molecular Weight=	28.77
Average Square Root of Delta P (mm H20)=	0.6979
% Isokinetic=	111.6
Pitot Coefficient=	0.83
Sampling Time (Minutes)=	62.5
Nozzle Diameter (mm)=	12.70
Stack Axis #1 (Meters)=	2.438
Stack Axis #2 (Meters)=	2.438
Rectangular Stack Stack Area (Square Meters)=	5.946
Stack Velocity (Actual, m/min)=	140
Flow rate (Actual, Cubic m/min)=	830
Flow rate (Standard, Wet, Cubic m/min)=	851
Flow rate (Standard, Dry, Cubic m/min)=	847

Particulate Loading - Front Half

		Corr. to 7% O2	& 12% CO2
Particulate Weight (g)=	0.0000		
Particulate Loading, Dry Std. (mg/cu m)=	0.0	0.0	0.0
Particulate Loading, Actual (mg/cu m)=	0.0		
Emission Rate (kg/hr)=	0.00		

No Back Half Analysis

FILE NAME - HCSS16
RUN # - HCSS RUN NO. 16
LOCATION - DERAMUS FIELD STATION
DATE - 4/2/93
PROJECT # - 9712M-51-16

PROG.=VER 06/09/89
04-08-1993 13:55:20

Point #	Delta P (in. H20)	Delta H (in. H20)	Stack T (F)	Meter T In(F)	Meter T Out(F)
1	0.015	2.00	38	60	60
2	0.013	2.00	38	61	61
3	0.030	2.00	36	61	61
4	0.025	2.00	38	63	61
5	0.020	2.00	39	65	64
6	0.012	2.00	42	65	64
7	0.009	2.00	39	66	64
8	0.025	2.00	39	68	64
9	0.022	2.00	40	69	65
10	0.020	2.00	40	72	65
11	0.022	2.00	38	68	66
12	0.015	2.00	39	72	67
13	0.025	2.00	39	73	68
14	0.027	2.00	41	76	68
15	0.025	2.00	41	77	69
16	0.019	1.70	40	76	71
17	0.010	1.70	40	77	71
18	0.010	1.70	41	79	72
19	0.025	1.70	41	80	72
20	0.022	1.70	41	83	73
21	0.020	2.00	34	78	74
22	0.025	2.00	35	81	74
23	0.020	2.00	36	83	75
24	0.020	2.00	36	84	76
25	0.015	2.00	37	85	77

Fraction	Final Wt. (g)	Tare Wt. (g)	Blank Wt. (g)	Net Wt. (g)
DRY CATCH	0.0000	0.0000	0.0000	0.0000
FILTER	0.0000	0.0000	0.0000	0.0000

Fraction	Final Wt. (g)	Tare Wt. (g)	Vol. (ml)	Net Wt. (g)
PROBE RINSE	0.0000	0.0000	0.0	0.0000
IMPINGERS	0.0000	0.0000	0.0	0.0000

Probe Rinse Blank (mg/ml)= 0.0000
Impinger Blank (mg/ml)= 0.0000

FILE NAME - HCSS17
RUN # - HCSS RUN #17
LOCATION - DERAMUS FIELD STATION
DATE - 4/2/93
PROJECT # - 9712M-51-16

PROG.=VER 06/09/89
04-09-1993 07:34:31

Initial Meter Volume (Cubic Feet)=	444.509
Final Meter Volume (Cubic Feet)=	485.392
Meter Factor=	1.015
Final Leak Rate (cu ft/min)=	0.005
Net Meter Volume (Cubic Feet)=	41.496
Gas Volume (Dry Standard Cubic Feet)=	39.634
Barometric Pressure (in Hg)=	29.02
Static Pressure (Inches H20)=	-0.13
Percent Oxygen=	20.5
Percent Carbon Dioxide=	0.0
Moisture Collected (ml)=	5.7
Percent Water=	0.7
Average Meter Temperature (F)=	78
Average Delta H (in H20)=	1.40
Average Delta P (in H20)=	0.015
Average Stack Temperature (F)=	47
Dry Molecular Weight=	28.82
Wet Molecular Weight=	28.75
Average Square Root of Delta P (in H20)=	0.1223
% Isokinetic=	116.2
Pitot Coefficient=	0.82
Sampling Time (Minutes)=	62.5
Nozzle Diameter (Inches)=	0.500
Stack Axis #1 (Inches)=	96.0
Stack Axis #2 (Inches)=	96.0
Rectangular Stack	
Stack Area (Square Feet)=	64.00
Stack Velocity (Actual, Feet/min)=	399
Flow Rate (Actual, Cubic ft/min)=	25,539
Flow rate (Standard, Wet, Cubic ft/min)=	25,794
Flow Rate (Standard, Dry, Cubic ft/min)=	25,621

Particulate Loading - Front Half

		Corr. to 7% O2	& 12% CO2
Particulate Weight (g)=	0.0000		
Particulate Loading, Dry Std. (gr/scf)=	0.0000	0.0000	0.0000
Particulate Loading, Actual (gr/cu ft)=	0.0000		
Emission Rate (lb/hr)=	0.00		

No Back Half Analysis

* * METRIC UNITS * *

FILE NAME - HCSS17
RUN # - HCSS RUN #17
LOCATION - DERAMUS FIELD STATION
DATE - 4/2/93
PROJECT # - 9712M-51-16

PROG.=VER 06/09/89
04-09-1993 07:34:31

Initial Meter Volume (Cubic Meters)=	12.587
Final Meter Volume (Cubic Meters)=	13.744
Meter Factor=	1.015
Final Leak Rate (cu m/min)=	0.0001
Net Meter Volume (Cubic Meters)=	1.175
Gas Volume (Dry Standard Cubic Meters)=	1.122
Barometric Pressure (mm Hg)=	737
Static Pressure (mm H20)=	-3
Percent Oxygen=	20.5
Percent Carbon Dioxide=	0.0
Moisture Collected (ml)=	5.7
Percent Water=	0.7
Average Meter Temperature (C)=	25
Average Delta H (mm H20)=	35.6
Average Delta P (mm H20)=	0.4
Average Stack Temperature (C)=	8
Dry Molecular Weight=	28.82
Wet Molecular Weight=	28.75
Average Square Root of Delta P (mm H20)=	0.6165
% Isokinetic=	116.2
Pitot Coefficient=	0.82
Sampling Time (Minutes)=	62.5
Nozzle Diameter (mm)=	12.70
Stack Axis #1 (Meters)=	2.438
Stack Axis #2 (Meters)=	2.438
Rectangular Stack Stack Area (Square Meters)=	5.946
Stack Velocity (Actual, m/min)=	122
Flow rate (Actual, Cubic m/min)=	723
Flow rate (Standard, Wet, Cubic m/min)=	730
Flow rate (Standard, Dry, Cubic m/min)=	725

Particulate Loading - Front Half

		Corr. to 7% O2	& 12% CO2
Particulate Weight (g)=	0.0000		
Particulate Loading, Dry Std. (mg/cu m)=	0.0	0.0	0.0
Particulate Loading, Actual (mg/cu m)=	0.0		
Emission Rate (kg/hr)=	0.00		

No Back Half Analysis

FILE NAME - HCSS17
RUN # - HCSS RUN #17
LOCATION - DERAMUS FIELD STATION
DATE - 4/2/93
PROJECT # - 9712M-51-16

PROG.=VER 06/09/89
04-09-1993 07:34:31

Point #	Delta P (in. H20)	Delta H (in. H20)	Stack T (F)	Meter T In(F)	Meter T Out(F)
1	0.025	1.40	45	77	77
2	0.015	1.40	46	76	76
3	0.025	1.40	46	77	76
4	0.015	1.40	46	76	76
5	0.010	1.40	47	77	76
6	0.005	1.40	46	76	76
7	0.015	1.40	47	77	76
8	0.010	1.40	46	77	76
9	0.015	1.40	46	78	76
10	0.015	1.40	46	78	76
11	0.015	1.40	48	77	76
12	0.010	1.40	48	77	76
13	0.015	1.40	50	79	77
14	0.010	1.40	48	79	77
15	0.010	1.40	47	80	77
16	0.015	1.40	48	81	79
17	0.010	1.40	47	79	78
18	0.020	1.40	49	80	78
19	0.020	1.40	47	80	78
20	0.015	1.40	47	81	78
21	0.015	1.40	46	79	78
22	0.020	1.40	47	80	78
23	0.025	1.40	46	81	79
24	0.020	1.40	46	81	79
25	0.015	1.40	47	82	79

Fraction	Final Wt. (g)	Tare Wt. (g)	Blank Wt. (g)	Net Wt. (g)
DRY CATCH	0.0000	0.0000	0.0000	0.0000
FILTER	0.0000	0.0000	0.0000	0.0000

Fraction	Final Wt. (g)	Tare Wt. (g)	Vol. (ml)	Net Wt. (g)
PROBE RINSE	0.0000	0.0000	0.0	0.0000
IMPINGERS	0.0000	0.0000	0.0	0.0000

Probe Rinse Blank (mg/ml)= 0.0000
Impinger Blank (mg/ml)= 0.0000

FILE NAME - HCSS18
RUN # - HCSS RUN NO. 18
LOCATION - DERAMUS FIELD STATION
DATE - 4/2/93
PROJECT # - 9712M-51-16

PROG.=VER 06/09/89
04-09-1993 07:53:20

Initial Meter Volume (Cubic Feet)=	443.789
Final Meter Volume (Cubic Feet)=	484.423
Meter Factor=	1.019
Final Leak Rate (cu ft/min)=	0.007
Net Meter Volume (Cubic Feet)=	41.406
Gas Volume (Dry Standard Cubic Feet)=	39.329
Barometric Pressure (in Hg)=	29.02
Static Pressure (Inches H20)=	-0.13
Percent Oxygen=	20.5
Percent Carbon Dioxide=	0.0
Moisture Collected (ml)=	4.3
Percent Water=	0.5
Average Meter Temperature (F)=	81
Average Delta H (in H20)=	1.40
Average Delta P (in H20)=	0.012
Average Stack Temperature (F)=	47
Dry Molecular Weight=	28.82
Wet Molecular Weight=	28.76
Average Square Root of Delta P (in H20)=	0.1080
% Isokinetic=	127.6
Pitot Coefficient=	0.83
Sampling Time (Minutes)=	62.5
Nozzle Diameter (Inches)=	0.500
Stack Axis #1 (Inches)=	96.0
Stack Axis #2 (Inches)=	96.0
Rectangular Stack	
Stack Area (Square Feet)=	64.00
Stack Velocity (Actual, Feet/min)=	360
Flow Rate (Actual, Cubic ft/min)=	23,039
Flow rate (Standard, Wet, Cubic ft/min)=	23,258
Flow Rate (Standard, Dry, Cubic ft/min)=	23,139

Particulate Loading - Front Half

		Corr. to 7% O2	& 12% CO2
Particulate Weight (g)=	0.0000		
Particulate Loading, Dry Std. (gr/scf)=	0.0000	0.0000	0.0000
Particulate Loading, Actual (gr/cu ft)=	0.0000		
Emission Rate (lb/hr)=	0.00		

No Back Half Analysis

* * METRIC UNITS * *

FILE NAME - HCSS18
RUN # - HCSS RUN NO. 18
LOCATION - DERAMUS FIELD STATION
DATE - 4/2/93
PROJECT # - 9712M-51-16

PROG.=VER 06/09/89
04-09-1993 07:53:20

Initial Meter Volume (Cubic Meters)=	12.566
Final Meter Volume (Cubic Meters)=	13.717
Meter Factor=	1.019
Final Leak Rate (cu m/min)=	0.0002
Net Meter Volume (Cubic Meters)=	1.172
Gas Volume (Dry Standard Cubic Meters)=	1.114
Barometric Pressure (mm Hg)=	737
Static Pressure (mm H20)=	-3
Percent Oxygen=	20.5
Percent Carbon Dioxide=	0.0
Moisture Collected (ml)=	4.3
Percent Water=	0.5
Average Meter Temperature (C)=	27
Average Delta H (mm H20)=	35.6
Average Delta P (mm H20)=	0.3
Average Stack Temperature (C)=	8
Dry Molecular Weight=	28.82
Wet Molecular Weight=	28.76
Average Square Root of Delta P (mm H20)=	0.5441
% Isokinetic=	127.6
Pitot Coefficient=	0.83
Sampling Time (Minutes)=	62.5
Nozzle Diameter (mm)=	12.70
Stack Axis #1 (Meters)=	2.438
Stack Axis #2 (Meters)=	2.438
Rectangular Stack Stack Area (Square Meters)=	5.946
Stack Velocity (Actual, m/min)=	110
Flow rate (Actual, Cubic m/min)=	652
Flow rate (Standard, Wet, Cubic m/min)=	659
Flow rate (Standard, Dry, Cubic m/min)=	655

Particulate Loading - Front Half

		Corr. to 7% O2	& 12% CO2
Particulate Weight (g)=	0.0000		
Particulate Loading, Dry Std. (mg/cu m)=	0.0	0.0	0.0
Particulate Loading, Actual (mg/cu m)=	0.0		
Emission Rate (kg/hr)=	0.00		

No Back Half Analysis

FILE NAME - HCSS18
RUN # - HCSS RUN NO. 18
LOCATION - DERAMUS FIELD STATION
DATE - 4/2/93
PROJECT # - 9712M-51-16

PROG.=VER 06/09/89
04-09-1993 07:53:20

Point #	Delta P (in. H20)	Delta H (in. H20)	Stack T (F)	Meter T In(F)	Meter T Out(F)
1	0.010	1.40	46	78	78
2	0.015	1.40	47	78	78
3	0.015	1.40	47	79	79
4	0.015	1.40	47	79	78
5	0.013	1.40	47	81	79
6	0.005	1.40	47	80	78
7	0.015	1.40	47	81	78
8	0.025	1.40	47	82	79
9	0.015	1.40	48	83	78
10	0.014	1.40	48	85	79
11	0.005	1.40	47	80	78
12	0.015	1.40	47	83	78
13	0.020	1.40	47	83	78
14	0.010	1.40	47	85	78
15	0.014	1.40	48	85	79
16	0.015	1.40	49	83	79
17	0.005	1.40	47	84	79
18	0.010	1.40	47	85	79
19	0.015	1.40	46	85	80
20	0.005	1.40	47	87	80
21	0.010	1.40	47	82	80
22	0.005	1.40	47	85	79
23	0.015	1.40	46	85	80
24	0.015	1.40	48	87	80
25	0.005	1.40	47	87	80

Fraction	Final Wt. (g)	Tare Wt. (g)	Blank Wt. (g)	Net Wt. (g)
DRY CATCH	0.0000	0.0000	0.0000	0.0000
FILTER	0.0000	0.0000	0.0000	0.0000

Fraction	Final Wt. (g)	Tare Wt. (g)	Vol. (ml)	Net Wt. (g)
PROBE RINSE	0.0000	0.0000	0.0	0.0000
IMPINGERS	0.0000	0.0000	0.0	0.0000

Probe Rinse Blank (mg/ml) = 0.0000
Impinger Blank (mg/ml) = 0.0000

FILE NAME - HCSS19
RUN # - HCSS RUN 19
LOCATION - DERAMUS FIELD STATION
DATE - 4/5/93
PROJECT # - 9712-51-16

PROG.=VER 06/09/89
04-09-1993 10:05:04

Initial Meter Volume (Cubic Feet)=	485.660
Final Meter Volume (Cubic Feet)=	527.878
Meter Factor=	1.015
Final Leak Rate (cu ft/min)=	0.015
Net Meter Volume (Cubic Feet)=	42.851
Gas Volume (Dry Standard Cubic Feet)=	42.254
Barometric Pressure (in Hg)=	29.80
Static Pressure (Inches H20)=	-0.13
Percent Oxygen=	20.5
Percent Carbon Dioxide=	0.0
Moisture Collected (ml)=	7.9
Percent Water=	0.9
Average Meter Temperature (F)=	75
Average Delta H (in H20)=	1.50
Average Delta P (in H20)=	0.024
Average Stack Temperature (F)=	43
Dry Molecular Weight=	28.82
Wet Molecular Weight=	28.73
Average Square Root of Delta P (in H20)=	0.1526
% Isokinetic=	97.8
Pitot Coefficient=	0.82
Sampling Time (Minutes)=	62.5
Nozzle Diameter (Inches)=	0.500
Stack Axis #1 (Inches)=	96.0
Stack Axis #2 (Inches)=	96.0
Rectangular Stack	
Stack Area (Square Feet)=	64.00
Stack Velocity (Actual, Feet/min)=	490
Flow Rate (Actual, Cubic ft/min)=	31,336
Flow rate (Standard, Wet, Cubic ft/min)=	32,728
Flow Rate (Standard, Dry, Cubic ft/min)=	32,442

Particulate Loading - Front Half

		Corr. to 7% O2	& 12% CO2
Particulate Weight (g)=	0.0000		
Particulate Loading, Dry Std. (gr/scf)=	0.0000	0.0000	0.0000
Particulate Loading, Actual (gr/cu ft)=	0.0000		
Emission Rate (lb/hr)=	0.00		

No Back Half Analysis

* * METRIC UNITS * *

FILE NAME - HCSS19
RUN # - HCSS RUN 19
LOCATION - DERAMUS FIELD STATION
DATE - 4/5/93
PROJECT # - 9712-51-16

PROG.=VER 06/09/89
04-09-1993 10:05:04

Initial Meter Volume (Cubic Meters)=	13.752
Final Meter Volume (Cubic Meters)=	14.947
Meter Factor=	1.015
Final Leak Rate (cu m/min)=	0.0004
Net Meter Volume (Cubic Meters)=	1.213
Gas Volume (Dry Standard Cubic Meters)=	1.196
Barometric Pressure (mm Hg)=	757
Static Pressure (mm H20)=	-3
Percent Oxygen=	20.5
Percent Carbon Dioxide=	0.0
Moisture Collected (ml)=	7.9
Percent Water=	0.9
Average Meter Temperature (C)=	24
Average Delta H (mm H20)=	38.1
Average Delta P (mm H20)=	0.6
Average Stack Temperature (C)=	6
Dry Molecular Weight=	28.82
Wet Molecular Weight=	28.73
Average Square Root of Delta P (mm H20)=	0.7689
% Isokinetic=	97.8
Pitot Coefficient=	0.82
Sampling Time (Minutes)=	62.5
Nozzle Diameter (mm)=	12.70
Stack Axis #1 (Meters)=	2.438
Stack Axis #2 (Meters)=	2.438
Rectangular Stack	
Stack Area (Square Meters)=	5.946
Stack Velocity (Actual, m/min)=	149
Flow rate (Actual, Cubic m/min)=	887
Flow rate (Standard, Wet, Cubic m/min)=	927
Flow rate (Standard, Dry, Cubic m/min)=	919

Particulate Loading - Front Half

		Corr. to 7% O2	& 12% CO2
Particulate Weight (g)=	0.0000		
Particulate Loading, Dry Std. (mg/cu m)=	0.0	0.0	0.0
Particulate Loading, Actual (mg/cu m)=	0.0		
Emission Rate (kg/hr)=	0.00		

No Back Half Analysis

FILE NAME - HCSS19
RUN # - HCSS RUN 19
LOCATION - DERAMUS FIELD STATION
DATE - 4/5/93
PROJECT # - 9712-51-16

PROG.=VER 06/09/89
04-09-1993 10:05:05

Point #	Delta P (in. H20)	Delta H (in. H20)	Stack T (F)	Meter T In(F)	Meter T Out(F)
1	0.040	1.50	41	69	69
2	0.025	1.50	43	69	69
3	0.035	1.50	42	69	69
4	0.025	1.50	43	71	69
5	0.020	1.50	43	71	70
6	0.020	1.50	43	72	71
7	0.020	1.50	43	72	71
8	0.025	1.50	43	73	71
9	0.030	1.50	43	74	72
10	0.015	1.50	43	75	73
11	0.020	1.50	45	75	73
12	0.015	1.50	46	76	74
13	0.020	1.50	45	78	75
14	0.020	1.50	46	78	75
15	0.025	1.50	45	78	75
16	0.020	1.50	45	78	76
17	0.020	1.50	46	79	76
18	0.020	1.50	45	80	77
19	0.025	1.50	45	80	77
20	0.020	1.50	45	81	78
21	0.025	1.50	40	79	78
22	0.030	1.50	41	80	78
23	0.030	1.50	41	81	78
24	0.020	1.50	41	82	79
25	0.025	1.50	41	82	79

Fraction	Final Wt. (g)	Tare Wt. (g)	Blank Wt. (g)	Net Wt. (g)
DRY CATCH	0.0000	0.0000	0.0000	0.0000
FILTER	0.0000	0.0000	0.0000	0.0000

Fraction	Final Wt. (g)	Tare Wt. (g)	Vol. (ml)	Net Wt. (g)
PROBE RINSE	0.0000	0.0000	0.0	0.0000
IMPINGERS	0.0000	0.0000	0.0	0.0000

Probe Rinse Blank (mg/ml) = 0.0000
Impinger Blank (mg/ml) = 0.0000

FILE NAME - HCSS20
RUN # - HCSS RUN NO. 20
LOCATION - DERAMUS FIELD STATION
DATE - 4/5/93
PROJECT # - 9712-51-16

PROG.=VER 06/09/89
04-09-1993 10:18:51

Initial Meter Volume (Cubic Feet)=	486.118
Final Meter Volume (Cubic Feet)=	528.724
Meter Factor=	1.019
Final Leak Rate (cu ft/min)=	0.008
Net Meter Volume (Cubic Feet)=	43.416
Gas Volume (Dry Standard Cubic Feet)=	42.420
Barometric Pressure (in Hg)=	29.80
Static Pressure (Inches H20)=	-0.13
Percent Oxygen=	20.5
Percent Carbon Dioxide=	0.0
Moisture Collected (ml)=	4.7
Percent Water=	0.5
Average Meter Temperature (F)=	80
Average Delta H (in H20)=	1.50
Average Delta P (in H20)=	0.021
Average Stack Temperature (F)=	46
Dry Molecular Weight=	28.82
Wet Molecular Weight=	28.76
Average Square Root of Delta P (in H20)=	0.1434
% Isokinetic=	102.2
Pitot Coefficient=	0.83
Sampling Time (Minutes)=	62.5
Nozzle Diameter (Inches)=	0.500
Stack Axis #1 (Inches)=	96.0
Stack Axis #2 (Inches)=	96.0
Rectangular Stack	
Stack Area (Square Feet)=	64.00
Stack Velocity (Actual, Feet/min)=	471
Flow Rate (Actual, Cubic ft/min)=	30,161
Flow rate (Standard, Wet, Cubic ft/min)=	31,338
Flow Rate (Standard, Dry, Cubic ft/min)=	31,176

Particulate Loading - Front Half

		Corr. to 7% O2	& 12% CO2
Particulate Weight (g)=	0.0000		
Particulate Loading, Dry Std. (gr/scf)=	0.0000	0.0000	0.0000
Particulate Loading, Actual (gr/cu ft)=	0.0000		
Emission Rate (lb/hr)=	0.00		

No Back Half Analysis

* * METRIC UNITS * *

FILE NAME - HCSS20
RUN # - HCSS RUN NO. 20
LOCATION - DERAMUS FIELD STATION
DATE - 4/5/93
PROJECT # - 9712-51-16

PROG.=VER 06/09/89
04-09-1993 10:18:51

Initial Meter Volume (Cubic Meters)=	13.765
Final Meter Volume (Cubic Meters)=	14.971
Meter Factor=	1.019
Final Leak Rate (cu m/min)=	0.0002
Net Meter Volume (Cubic Meters)=	1.229
Gas Volume (Dry Standard Cubic Meters)=	1.201
Barometric Pressure (mm Hg)=	757
Static Pressure (mm H20)=	-3
Percent Oxygen=	20.5
Percent Carbon Dioxide=	0.0
Moisture Collected (ml)=	4.7
Percent Water=	0.5
Average Meter Temperature (C)=	27
Average Delta H (mm H20)=	38.1
Average Delta P (mm H20)=	0.5
Average Stack Temperature (C)=	8
Dry Molecular Weight=	28.82
Wet Molecular Weight=	28.76
Average Square Root of Delta P (mm H20)=	0.7227
% Isokinetic=	102.2
Pitot Coefficient=	0.83
Sampling Time (Minutes)=	62.5
Nozzle Diameter (mm)=	12.70
Stack Axis #1 (Meters)=	2.438
Stack Axis #2 (Meters)=	2.438
Rectangular Stack	
Stack Area (Square Meters)=	5.946
Stack Velocity (Actual, m/min)=	144
Flow rate (Actual, Cubic m/min)=	854
Flow rate (Standard, Wet, Cubic m/min)=	887
Flow rate (Standard, Dry, Cubic m/min)=	883

Particulate Loading - Front Half

		Corr. to 7% O2	& 12% CO2
Particulate Weight (g)=	0.0000		
Particulate Loading, Dry Std. (mg/cu m)=	0.0	0.0	0.0
Particulate Loading, Actual (mg/cu m)=	0.0		
Emission Rate (kg/hr)=	0.00		

No Back Half Analysis

FILE NAME - HCSS20
RUN # - HCSS RUN NO. 20
LOCATION - DERAMUS FIELD STATION
DATE - 4/5/93
PROJECT # - 9712-51-16

PROG.=VER 06/09/89
04-09-1993 10:18:51

Point #	Delta P (in. H20)	Delta H (in. H20)	Stack T (F)	Meter T In(F)	Meter T Out(F)
1	0.018	1.50	46	72	71
2	0.017	1.50	45	73	72
3	0.026	1.50	45	74	72
4	0.029	1.50	46	76	72
5	0.028	1.50	47	77	73
6	0.018	1.50	47	78	74
7	0.022	1.50	46	80	74
8	0.028	1.50	47	81	75
9	0.025	1.50	47	82	75
10	0.022	1.50	47	84	76
11	0.027	1.50	47	79	77
12	0.019	1.50	48	83	77
13	0.020	1.50	47	84	77
14	0.025	1.50	47	86	78
15	0.024	1.50	48	88	79
16	0.019	1.50	48	84	79
17	0.012	1.50	46	86	80
18	0.020	1.50	46	87	80
19	0.014	1.50	46	88	80
20	0.015	1.50	47	90	81
21	0.014	1.50	41	84	81
22	0.024	1.50	43	87	82
23	0.019	1.50	43	87	82
24	0.016	1.50	44	89	82
25	0.020	1.50	45	89	83

Fraction	Final Wt. (g)	Tare Wt. (g)	Blank Wt. (g)	Net Wt. (g)
DRY CATCH	0.0000	0.0000	0.0000	0.0000
FILTER	0.0000	0.0000	0.0000	0.0000

Fraction	Final Wt. (g)	Tare Wt. (g)	Vol. (ml)	Net Wt. (g)
PROBE RINSE	0.0000	0.0000	0.0	0.0000
IMPINGERS	0.0000	0.0000	0.0	0.0000

Probe Rinse Blank (mg/ml) = 0.0000
Impinger Blank (mg/ml) = 0.0000

FILE NAME - HCSS21
RUN # - HCSS RUN NO. 21
LOCATION - DERAMUS FIELD STATION
DATE - 4/5/93
PROJECT # - 9712-51-16

PROG.=VER 06/09/89
04-09-1993 16:52:09

Initial Meter Volume (Cubic Feet)=	528.418
Final Meter Volume (Cubic Feet)=	563.812
Meter Factor=	1.015
Final Leak Rate (cu ft/min)=	0.005
Net Meter Volume (Cubic Feet)=	35.925
Gas Volume (Dry Standard Cubic Feet)=	34.730
Barometric Pressure (in Hg)=	29.30
Static Pressure (Inches H20)=	-1.20
Percent Oxygen=	20.5
Percent Carbon Dioxide=	0.0
Moisture Collected (ml)=	8.3
Percent Water=	1.1
Average Meter Temperature (F)=	76
Average Delta H (in H20)=	1.00
Average Delta P (in H20)=	0.182
Average Stack Temperature (F)=	51
Dry Molecular Weight=	28.82
Wet Molecular Weight=	28.70
Average Square Root of Delta P (in H20)=	0.4207
% Isokinetic=	119.9
Pitot Coefficient=	0.82
Sampling Time (Minutes)=	62.5
Nozzle Diameter (Inches)=	0.249
Stack Axis #1 (Inches)=	96.0
Stack Axis #2 (Inches)=	96.0
Rectangular Stack	
Stack Area (Square Feet)=	64.00
Stack Velocity (Actual, Feet/min)=	1,375
Flow Rate (Actual, Cubic ft/min)=	87,982
Flow rate (Standard, Wet, Cubic ft/min)=	88,702
Flow Rate (Standard, Dry, Cubic ft/min)=	87,714

Particulate Loading - Front Half

		Corr. to 7% O2	& 12% CO2
Particulate Weight (g)=	0.0000		
Particulate Loading, Dry Std. (gr/scf)=	0.0000	0.0000	0.0000
Particulate Loading, Actual (gr/cu ft)=	0.0000		
Emission Rate (lb/hr)=	0.00		

No Back Half Analysis

* * METRIC UNITS * *

FILE NAME - HCSS21
RUN # - HCSS RUN NO. 21
LOCATION - DERAMUS FIELD STATION
DATE - 4/5/93
PROJECT # - 9712-51-16

PROG.=VER 06/09/89
04-09-1993 16:52:09

Initial Meter Volume (Cubic Meters)=	14.963
Final Meter Volume (Cubic Meters)=	15.965
Meter Factor=	1.015
Final Leak Rate (cu m/min)=	0.0001
Net Meter Volume (Cubic Meters)=	1.017
Gas Volume (Dry Standard Cubic Meters)=	0.983
Barometric Pressure (mm Hg)=	744
Static Pressure (mm H20)=	-30
Percent Oxygen=	20.5
Percent Carbon Dioxide=	0.0
Moisture Collected (ml)=	8.3
Percent Water=	1.1
Average Meter Temperature (C)=	24
Average Delta H (mm H20)=	25.4
Average Delta P (mm H20)=	4.6
Average Stack Temperature (C)=	11
Dry Molecular Weight=	28.82
Wet Molecular Weight=	28.70
Average Square Root of Delta P (mm H20)=	2.1201
% Isokinetic=	119.9
Pitot Coefficient=	0.82
Sampling Time (Minutes)=	62.5
Nozzle Diameter (mm)=	6.32
Stack Axis #1 (Meters)=	2.438
Stack Axis #2 (Meters)=	2.438
Rectangular Stack	
Stack Area (Square Meters)=	5.946
Stack Velocity (Actual, m/min)=	419
Flow rate (Actual, Cubic m/min)=	2,491
Flow rate (Standard, Wet, Cubic m/min)=	2,512
Flow rate (Standard, Dry, Cubic m/min)=	2,484

Particulate Loading - Front Half

		Corr. to 7% O2	& 12% CO2
Particulate Weight (g)=	0.0000		
Particulate Loading, Dry Std. (mg/cu m)=	0.0	0.0	0.0
Particulate Loading, Actual (mg/cu m)=	0.0		
Emission Rate (kg/hr)=	0.00		

No Back Half Analysis

FILE NAME - HCSS21
RUN # - HCSS RUN NO. 21
LOCATION - DERAMUS FIELD STATION
DATE - 4/5/93
PROJECT # - 9712-51-16

PROG.=VER 06/09/89
04-09-1993 16:52:10

Point #	Delta P (in. H20)	Delta H (in. H20)	Stack T (F)	Meter T In(F)	Meter T Out(F)
1	0.150	1.00	51	75	75
2	0.220	1.00	50	74	75
3	0.210	1.00	51	74	74
4	0.220	1.00	50	74	74
5	0.120	1.00	50	75	74
6	0.100	1.00	52	74	74
7	0.120	1.00	52	74	74
8	0.230	1.00	51	75	74
9	0.130	1.00	50	75	75
10	0.070	1.00	53	76	75
11	0.190	1.00	52	76	75
12	0.160	1.00	51	76	75
13	0.200	1.00	52	77	75
14	0.150	1.00	51	77	76
15	0.100	1.00	52	78	75
16	0.170	1.00	53	77	76
17	0.230	1.00	54	77	76
18	0.290	1.00	51	78	76
19	0.280	1.00	54	78	77
20	0.130	1.00	53	79	77
21	0.200	1.00	51	77	77
22	0.250	1.00	50	78	76
23	0.210	1.00	48	79	77
24	0.270	1.00	50	79	77
25	0.150	1.00	51	80	78

Fraction	Final Wt. (g)	Tare Wt. (g)	Blank Wt. (g)	Net Wt. (g)
DRY CATCH	0.0000	0.0000	0.0000	0.0000
FILTER	0.0000	0.0000	0.0000	0.0000

Fraction	Final Wt. (g)	Tare Wt. (g)	Vol. (ml)	Net Wt. (g)
PROBE RINSE	0.0000	0.0000	0.0	0.0000
IMPINGERS	0.0000	0.0000	0.0	0.0000

Probe Rinse Blank (mg/ml)= 0.0000
Impinger Blank (mg/ml)= 0.0000

FILE NAME - HCSS22
RUN # - HCSS RUN NO. 22
LOCATION - DERAMUS FIELD STATION
DATE - 4/5/93
PROJECT # - 9712-51-16

PROG.=VER 06/09/89
04-09-1993 17:05:37

Initial Meter Volume (Cubic Feet)=	529.382
Final Meter Volume (Cubic Feet)=	564.164
Meter Factor=	1.019
Final Leak Rate (cu ft/min)=	0.012
Net Meter Volume (Cubic Feet)=	35.443
Gas Volume (Dry Standard Cubic Feet)=	34.159
Barometric Pressure (in Hg)=	29.30
Static Pressure (Inches H20)=	-1.20
Percent Oxygen=	20.5
Percent Carbon Dioxide=	0.0
Moisture Collected (ml)=	5.9
Percent Water=	0.8
Average Meter Temperature (F)=	78
Average Delta H (in H20)=	1.00
Average Delta P (in H20)=	0.186
Average Stack Temperature (F)=	53
Dry Molecular Weight=	28.82
Wet Molecular Weight=	28.73
Average Square Root of Delta P (in H20)=	0.4244
% Isokinetic=	114.2
Pitot Coefficient=	0.83
Sampling Time (Minutes)=	62.5
Nozzle Diameter (Inches)=	0.249
Stack Axis #1 (Inches)=	96.0
Stack Axis #2 (Inches)=	96.0
Rectangular Stack	
Stack Area (Square Feet)=	64.00
Stack Velocity (Actual, Feet/min)=	1,418
Flow Rate (Actual, Cubic ft/min)=	90,780
Flow rate (Standard, Wet, Cubic ft/min)=	91,308
Flow Rate (Standard, Dry, Cubic ft/min)=	90,571

Particulate Loading - Front Half

		Corr. to 7% O2	& 12% CO2
Particulate Weight (g)=	0.0000		
Particulate Loading, Dry Std. (gr/scf)=	0.0000	0.0000	0.0000
Particulate Loading, Actual (gr/cu ft)=	0.0000		
Emission Rate (lb/hr)=	0.00		

No Back Half Analysis

* * METRIC UNITS * *

FILE NAME - HCSS22
RUN # - HCSS RUN NO. 22
LOCATION - DERAMUS FIELD STATION
DATE - 4/5/93
PROJECT # - 9712-51-16

PROG.=VER 06/09/89
04-09-1993 17:05:37

Initial Meter Volume (Cubic Meters)=	14.990
Final Meter Volume (Cubic Meters)=	15.975
Meter Factor=	1.019
Final Leak Rate (cu m/min)=	0.0003
Net Meter Volume (Cubic Meters)=	1.004
Gas Volume (Dry Standard Cubic Meters)=	0.967
Barometric Pressure (mm Hg)=	744
Static Pressure (mm H20)=	-30
Percent Oxygen=	20.5
Percent Carbon Dioxide=	0.0
Moisture Collected (ml)=	5.9
Percent Water=	0.8
Average Meter Temperature (C)=	25
Average Delta H (mm H20)=	25.4
Average Delta P (mm H20)=	4.7
Average Stack Temperature (C)=	11
Dry Molecular Weight=	28.82
Wet Molecular Weight=	28.73
Average Square Root of Delta P (mm H20)=	2.1390
% Isokinetic=	114.2
Pitot Coefficient=	0.83
Sampling Time (Minutes)=	62.5
Nozzle Diameter (mm)=	6.32
Stack Axis #1 (Meters)=	2.438
Stack Axis #2 (Meters)=	2.438
Rectangular Stack	
Stack Area (Square Meters)=	5.946
Stack Velocity (Actual, m/min)=	432
Flow rate (Actual, Cubic m/min)=	2,571
Flow rate (Standard, Wet, Cubic m/min)=	2,586
Flow rate (Standard, Dry, Cubic m/min)=	2,565

Particulate Loading - Front Half

		Corr. to 7% O2	& 12% CO2
Particulate Weight (g)=	0.0000		
Particulate Loading, Dry Std. (mg/cu m)=	0.0	0.0	0.0
Particulate Loading, Actual (mg/cu m)=	0.0		
Emission Rate (kg/hr)=	0.00		

No Back Half Analysis

FILE NAME - HCSS22
RUN # - HCSS RUN NO. 22
LOCATION - DERAMUS FIELD STATION
DATE - 4/5/93
PROJECT # - 9712-51-16

PROG.=VER 06/09/89
04-09-1993 17:05:37

Point #	Delta P (in. H20)	Delta H (in. H20)	Stack T (F)	Meter T In(F)	Meter T Out(F)
1	0.210	1.00	51	76	76
2	0.170	1.00	51	75	75
3	0.260	1.00	52	75	76
4	0.330	1.00	52	76	76
5	0.270	1.00	51	76	76
6	0.150	1.00	53	75	75
7	0.140	1.00	53	76	75
8	0.270	1.00	53	77	75
9	0.310	1.00	53	78	75
10	0.200	1.00	54	79	75
11	0.110	1.00	53	78	75
12	0.140	1.00	53	79	76
13	0.170	1.00	54	80	76
14	0.150	1.00	53	81	76
15	0.220	1.00	52	82	76
16	0.090	1.00	53	79	77
17	0.140	1.00	53	80	77
18	0.080	1.00	52	81	77
19	0.170	1.00	53	82	77
20	0.120	1.00	55	83	77
21	0.250	1.00	52	79	77
22	0.160	1.00	52	81	77
23	0.120	1.00	50	82	78
24	0.240	1.00	52	82	78
25	0.180	1.00	53	83	78

Fraction	Final Wt. (g)	Tare Wt. (g)	Blank Wt. (g)	Net Wt. (g)
DRY CATCH	0.0000	0.0000	0.0000	0.0000
FILTER	0.0000	0.0000	0.0000	0.0000

Fraction	Final Wt. (g)	Tare Wt. (g)	Vol. (ml)	Net Wt. (g)
PROBE RINSE	0.0000	0.0000	0.0	0.0000
IMPINGERS	0.0000	0.0000	0.0	0.0000

Probe Rinse Blank (mg/ml) = 0.0000
Impinger Blank (mg/ml) = 0.0000

FILE NAME - HCSS23
RUN # - HCSS RUN NO. 23
LOCATION - DERAMUS FIELD STATION
DATE - 4/6/93
PROJECT # - 9712-51-16

PROG.=VER 06/09/89
04-09-1993 17:22:46

Initial Meter Volume (Cubic Feet)=	564.028
Final Meter Volume (Cubic Feet)=	598.926
Meter Factor=	1.015
Final Leak Rate (cu ft/min)=	0.005
Net Meter Volume (Cubic Feet)=	35.421
Gas Volume (Dry Standard Cubic Feet)=	35.867
Barometric Pressure (in Hg)=	29.80
Static Pressure (Inches H20)=	-1.20
Percent Oxygen=	20.5
Percent Carbon Dioxide=	0.0
Moisture Collected (ml)=	5.3
Percent Water=	0.7
Average Meter Temperature (F)=	60
Average Delta H (in H20)=	1.00
Average Delta P (in H20)=	0.165
Average Stack Temperature (F)=	41
Dry Molecular Weight=	28.82
Wet Molecular Weight=	28.75
Average Square Root of Delta P (in H20)=	0.4000
% Isokinetic=	127.4
Pitot Coefficient=	0.82
Sampling Time (Minutes)=	62.5
Nozzle Diameter (Inches)=	0.249
Stack Axis #1 (Inches)=	96.0
Stack Axis #2 (Inches)=	96.0
Rectangular Stack	
Stack Area (Square Feet)=	64.00
Stack Velocity (Actual, Feet/min)=	1,283
Flow Rate (Actual, Cubic ft/min)=	82,093
Flow rate (Standard, Wet, Cubic ft/min)=	85,833
Flow Rate (Standard, Dry, Cubic ft/min)=	85,240

Particulate Loading - Front Half

		Corr. to 7% O2	& 12% CO2
Particulate Weight (g)=	0.0000		
Particulate Loading, Dry Std. (gr/scf)=	0.0000	0.0000	0.0000
Particulate Loading, Actual (gr/cu ft)=	0.0000		
Emission Rate (lb/hr)=	0.00		

No Back Half Analysis

* * METRIC UNITS * *

PROG.=VER 06/09/89
04-09-1993 17:22:46

FILE NAME - HCSS23
RUN # - HCSS RUN NO. 23
LOCATION - DERAMUS FIELD STATION
DATE - 4/6/93
PROJECT # - 9712-51-16

Initial Meter Volume (Cubic Meters)=	15.971
Final Meter Volume (Cubic Meters)=	16.959
Meter Factor=	1.015
Final Leak Rate (cu m/min)=	0.0001
Net Meter Volume (Cubic Meters)=	1.003
Gas Volume (Dry Standard Cubic Meters)=	1.016
Barometric Pressure (mm Hg)=	757
Static Pressure (mm H20)=	-30
Percent Oxygen=	20.5
Percent Carbon Dioxide=	0.0
Moisture Collected (ml)=	5.3
Percent Water=	0.7
Average Meter Temperature (C)=	16
Average Delta H (mm H20)=	25.4
Average Delta P (mm H20)=	4.2
Average Stack Temperature (C)=	5
Dry Molecular Weight=	28.82
Wet Molecular Weight=	28.75
Average Square Root of Delta P (mm H20)=	2.0161
% Isokinetic=	127.4
Pitot Coefficient=	0.82
Sampling Time (Minutes)=	62.5
Nozzle Diameter (mm)=	6.32
Stack Axis #1 (Meters)=	2.438
Stack Axis #2 (Meters)=	2.438
Rectangular Stack	
Stack Area (Square Meters)=	5.946
Stack Velocity (Actual, m/min)=	391
Flow rate (Actual, Cubic m/min)=	2,325
Flow rate (Standard, Wet, Cubic m/min)=	2,431
Flow rate (Standard, Dry, Cubic m/min)=	2,414

Particulate Loading - Front Half

		Corr. to 7% O2	& 12% CO2
Particulate Weight (g)=	0.0000		
Particulate Loading, Dry Std. (mg/cu m)=	0.0	0.0	0.0
Particulate Loading, Actual (mg/cu m)=	0.0		
Emission Rate (kg/hr)=	0.00		

No Back Half Analysis

FILE NAME - HCSS23
RUN # - HCSS RUN NO. 23
LOCATION - DERAMUS FIELD STATION
DATE - 4/6/93
PROJECT # - 9712-51-16

PROG.=VER 06/09/89
04-09-1993 17:22:46

Point #	Delta P (in. H20)	Delta H (in. H20)	Stack T (F)	Meter T In(F)	Meter T Out(F)
1	0.150	1.00	41	53	52
2	0.150	1.00	40	53	52
3	0.170	1.00	40	53	52
4	0.130	1.00	41	54	53
5	0.120	1.00	42	55	53
6	0.120	1.00	42	56	55
7	0.120	1.00	41	57	55
8	0.130	1.00	41	58	55
9	0.100	1.00	42	58	56
10	0.070	1.00	42	60	57
11	0.160	1.00	42	60	58
12	0.200	1.00	41	61	58
13	0.170	1.00	42	62	59
14	0.220	1.00	42	63	60
15	0.120	1.00	43	64	60
16	0.170	1.00	42	64	62
17	0.240	1.00	43	64	62
18	0.220	1.00	43	66	63
19	0.270	1.00	44	67	64
20	0.150	1.00	44	68	64
21	0.135	1.00	39	67	65
22	0.130	1.00	40	68	65
23	0.350	1.00	40	69	66
24	0.250	1.00	40	70	67
25	0.090	1.00	40	71	67

Fraction	Final Wt. (g)	Tare Wt. (g)	Blank Wt. (g)	Net Wt. (g)
DRY CATCH	0.0000	0.0000	0.0000	0.0000
FILTER	0.0000	0.0000	0.0000	0.0000

Fraction	Final Wt. (g)	Tare Wt. (g)	Vol. (ml)	Net Wt. (g)
PROBE RINSE	0.0000	0.0000	0.0	0.0000
IMPINGERS	0.0000	0.0000	0.0	0.0000

Probe Rinse Blank (mg/ml) = 0.0000
Impinger Blank (mg/ml) = 0.0000

FILE NAME - HCSS24
RUN # - HCSS RUN NO. 23
LOCATION - DERAMUS FIELD STATION
DATE - 4/6/93
PROJECT # - 9712-51-16

PROG.=VER 06/09/89
04-08-1993 07:59:23

Initial Meter Volume (Cubic Feet)=	564.665
Final Meter Volume (Cubic Feet)=	599.360
Meter Factor=	1.019
Final Leak Rate (cu ft/min)=	0.002
Net Meter Volume (Cubic Feet)=	35.354
Gas Volume (Dry Standard Cubic Feet)=	35.565
Barometric Pressure (in Hg)=	29.80
Static Pressure (Inches H20)=	-1.20
Percent Oxygen=	20.5
Percent Carbon Dioxide=	0.0
Moisture Collected (ml)=	5.4
Percent Water=	0.7
Average Meter Temperature (F)=	64
Average Delta H (in H20)=	1.00
Average Delta P (in H20)=	0.197
Average Stack Temperature (F)=	43
Dry Molecular Weight=	28.82
Wet Molecular Weight=	28.74
Average Square Root of Delta P (in H20)=	0.4399
% Isokinetic=	112.5
Pitot Coefficient=	0.83
Sampling Time (Minutes)=	62.5
Nozzle Diameter (Inches)=	0.249
Stack Axis #1 (Inches)=	96.0
Stack Axis #2 (Inches)=	96.0
Rectangular Stack	
Stack Area (Square Feet)=	64.00
Stack Velocity (Actual, Feet/min)=	1,443
Flow Rate (Actual, Cubic ft/min)=	92,368
Flow rate (Standard, Wet, Cubic ft/min)=	96,376
Flow Rate (Standard, Dry, Cubic ft/min)=	95,691

Particulate Loading - Front Half

		Corr. to 7% O2	& 12% CO2
Particulate Weight (g)=	0.0000		
Particulate Loading, Dry Std. (gr/scf)=	0.0000	0.0000	0.0000
Particulate Loading, Actual (gr/cu ft)=	0.0000		
Emission Rate (lb/hr)=	0.00		

No Back Half Analysis

* * METRIC UNITS * *

PROG.=VER 06/09/89
04-08-1993 07:59:23

FILE NAME - HCSS24
RUN # - HCSS RUN NO. 23
LOCATION - DERAMUS FIELD STATION
DATE - 4/6/93
PROJECT # - 9712-51-16

Initial Meter Volume (Cubic Meters)=	15.989
Final Meter Volume (Cubic Meters)=	16.971
Meter Factor=	1.019
Final Leak Rate (cu m/min)=	0.0001
Net Meter Volume (Cubic Meters)=	1.001
Gas Volume (Dry Standard Cubic Meters)=	1.007
Barometric Pressure (mm Hg)=	757
Static Pressure (mm H20)=	-30
Percent Oxygen=	20.5
Percent Carbon Dioxide=	0.0
Moisture Collected (ml)=	5.4
Percent Water=	0.7
Average Meter Temperature (C)=	18
Average Delta H (mm H20)=	25.4
Average Delta P (mm H20)=	5.0
Average Stack Temperature (C)=	6
Dry Molecular Weight=	28.82
Wet Molecular Weight=	28.74
Average Square Root of Delta P (mm H20)=	2.2171
% Isokinetic=	112.5
Pitot Coefficient=	0.83
Sampling Time (Minutes)=	62.5
Nozzle Diameter (mm)=	6.32
Stack Axis #1 (Meters)=	2.438
Stack Axis #2 (Meters)=	2.438
Rectangular Stack	
Stack Area (Square Meters)=	5.946
Stack Velocity (Actual, m/min)=	440
Flow rate (Actual, Cubic m/min)=	2,616
Flow rate (Standard, Wet, Cubic m/min)=	2,729
Flow rate (Standard, Dry, Cubic m/min)=	2,710

Particulate Loading - Front Half

		Corr. to 7% O2	& 12% CO2
Particulate Weight (g)=	0.0000		
Particulate Loading, Dry Std. (mg/cu m)=	0.0	0.0	0.0
Particulate Loading, Actual (mg/cu m)=	0.0		
Emission Rate (kg/hr)=	0.00		

No Back Half Analysis

FILE NAME - HCSS24
RUN # - HCSS RUN NO. 23
LOCATION - DERAMUS FIELD STATION
DATE - 4/6/93
PROJECT # - 9712-51-16

PROG.=VER 06/09/89
04-08-1993 07:59:23

Point #	Delta P (in. H20)	Delta H (in. H20)	Stack T (F)	Meter T In(F)	Meter T Out(F)
1	0.220	1.00	42	55	55
2	0.290	1.00	42	55	54
3	0.300	1.00	41	57	55
4	0.280	1.00	41	58	55
5	0.180	1.00	42	59	55
6	0.180	1.00	42	59	57
7	0.240	1.00	43	62	57
8	0.240	1.00	43	63	58
9	0.240	1.00	43	65	58
10	0.150	1.00	43	66	59
11	0.130	1.00	43	63	60
12	0.200	1.00	42	66	61
13	0.200	1.00	43	68	61
14	0.170	1.00	43	69	62
15	0.120	1.00	44	70	62
16	0.140	1.00	44	66	64
17	0.150	1.00	44	70	64
18	0.160	1.00	45	72	64
19	0.140	1.00	45	73	65
20	0.100	1.00	45	74	65
21	0.250	1.00	40	70	67
22	0.230	1.00	41	74	67
23	0.190	1.00	41	75	68
24	0.230	1.00	41	76	68
25	0.200	1.00	40	77	69

Fraction	Final Wt. (g)	Tare Wt. (g)	Blank Wt. (g)	Net Wt. (g)
DRY CATCH	0.0000	0.0000	0.0000	0.0000
FILTER	0.0000	0.0000	0.0000	0.0000

Fraction	Final Wt. (g)	Tare Wt. (g)	Vol. (ml)	Net Wt. (g)
PROBE RINSE	0.0000	0.0000	0.0	0.0000
IMPINGERS	0.0000	0.0000	0.0	0.0000

Probe Rinse Blank (mg/ml) = 0.0000
Impinger Blank (mg/ml) = 0.0000

FILE NAME - HCSS25
RUN # - HCSS RUN NO. 25
LOCATION - DERAMUS FIELD STATION
DATE - 4/6/93
PROJECT # - 9712-51-16

PROG.=VER 06/09/89
04-08-1993 08:28:17

Initial Meter Volume (Cubic Feet)=	599.322
Final Meter Volume (Cubic Feet)=	634.505
Meter Factor=	1.015
Final Leak Rate (cu ft/min)=	0.004
Net Meter Volume (Cubic Feet)=	35.711
Gas Volume (Dry Standard Cubic Feet)=	34.726
Barometric Pressure (in Hg)=	29.60
Static Pressure (Inches H20)=	-1.20
Percent Oxygen=	20.5
Percent Carbon Dioxide=	0.0
Moisture Collected (ml)=	7.4
Percent Water=	1.0
Average Meter Temperature (F)=	78
Average Delta H (in H20)=	1.00
Average Delta P (in H20)=	0.152
Average Stack Temperature (F)=	54
Dry Molecular Weight=	28.82
Wet Molecular Weight=	28.71
Average Square Root of Delta P (in H20)=	0.3846
% Isokinetic=	130.7
Pitot Coefficient=	0.82
Sampling Time (Minutes)=	62.5
Nozzle Diameter (Inches)=	0.249
Stack Axis #1 (Inches)=	96.0
Stack Axis #2 (Inches)=	96.0
Rectangular Stack	
Stack Area (Square Feet)=	64.00
Stack Velocity (Actual, Feet/min)=	1,253
Flow Rate (Actual, Cubic ft/min)=	80,211
Flow rate (Standard, Wet, Cubic ft/min)=	81,272
Flow Rate (Standard, Dry, Cubic ft/min)=	80,464

Particulate Loading - Front Half

		Corr. to 7% O2	& 12% CO2
Particulate Weight (g)=	0.0000		
Particulate Loading, Dry Std. (gr/scf)=	0.0000	0.0000	0.0000
Particulate Loading, Actual (gr/cu ft)=	0.0000		
Emission Rate (lb/hr)=	0.00		

No Back Half Analysis

* * METRIC UNITS * *

FILE NAME - HCSS25
RUN # - HCSS RUN NO. 25
LOCATION - DERAMUS FIELD STATION
DATE - 4/6/93
PROJECT # - 9712-51-16

PROG.=VER 06/09/89
04-08-1993 08:28:17

Initial Meter Volume (Cubic Meters)=	16.970
Final Meter Volume (Cubic Meters)=	17.967
Meter Factor=	1.015
Final Leak Rate (cu m/min)=	0.0001
Net Meter Volume (Cubic Meters)=	1.011
Gas Volume (Dry Standard Cubic Meters)=	0.983
Barometric Pressure (mm Hg)=	752
Static Pressure (mm H20)=	-30
Percent Oxygen=	20.5
Percent Carbon Dioxide=	0.0
Moisture Collected (ml)=	7.4
Percent Water=	1.0
Average Meter Temperature (C)=	26
Average Delta H (mm H20)=	25.4
Average Delta P (mm H20)=	3.9
Average Stack Temperature (C)=	12
Dry Molecular Weight=	28.82
Wet Molecular Weight=	28.71
Average Square Root of Delta P (mm H20)=	1.9381
% Isokinetic=	130.7
Pitot Coefficient=	0.82
Sampling Time (Minutes)=	62.5
Nozzle Diameter (mm)=	6.32
Stack Axis #1 (Meters)=	2.438
Stack Axis #2 (Meters)=	2.438
Rectangular Stack	
Stack Area (Square Meters)=	5.946
Stack Velocity (Actual, m/min)=	382
Flow rate (Actual, Cubic m/min)=	2,271
Flow rate (Standard, Wet, Cubic m/min)=	2,301
Flow rate (Standard, Dry, Cubic m/min)=	2,278

Particulate Loading - Front Half

		Corr. to 7% O2	& 12% CO2
Particulate Weight (g)=	0.0000		
Particulate Loading, Dry Std. (mg/cu m)=	0.0	0.0	0.0
Particulate Loading, Actual (mg/cu m)=	0.0		
Emission Rate (kg/hr)=	0.00		

No Back Half Analysis

FILE NAME - HCSS25
RUN # - HCSS RUN NO. 25
LOCATION - DERAMUS FIELD STATION
DATE - 4/6/93
PROJECT # - 9712-51-16

PROG.=VER 06/09/89
04-08-1993 08:28:18

Point #	Delta P (in. H20)	Delta H (in. H20)	Stack T (F)	Meter T In(F)	Meter T Out(F)
1	0.160	1.00	54	75	74
2	0.160	1.00	52	75	74
3	0.170	1.00	53	75	74
4	0.210	1.00	54	76	75
5	0.100	1.00	54	76	75
6	0.110	1.00	54	77	76
7	0.110	1.00	53	77	76
8	0.110	1.00	54	78	77
9	0.120	1.00	54	79	77
10	0.080	1.00	53	79	77
11	0.150	1.00	54	79	78
12	0.160	1.00	54	79	78
13	0.110	1.00	55	80	78
14	0.070	1.00	56	81	78
15	0.100	1.00	54	81	79
16	0.160	1.00	54	79	79
17	0.190	1.00	54	80	79
18	0.230	1.00	55	80	79
19	0.180	1.00	56	81	79
20	0.090	1.00	56	81	79
21	0.210	1.00	53	80	79
22	0.220	1.00	53	81	79
23	0.220	1.00	53	81	80
24	0.230	1.00	55	82	80
25	0.150	1.00	53	83	80

Fraction	Final Wt. (g)	Tare Wt. (g)	Blank Wt. (g)	Net Wt. (g)
DRY CATCH	0.0000	0.0000	0.0000	0.0000
FILTER	0.0000	0.0000	0.0000	0.0000

Fraction	Final Wt. (g)	Tare Wt. (g)	Vol. (ml)	Net Wt. (g)
PROBE RINSE	0.0000	0.0000	0.0	0.0000
IMPINGERS	0.0000	0.0000	0.0	0.0000

Probe Rinse Blank (mg/ml)= 0.0000
Impinger Blank (mg/ml)= 0.0000

FILE NAME - HCSS26
RUN # - HCSS RUN NO. 26
LOCATION - DERAMUS FIELD STATION
DATE - 4/6/93
PROJECT # - 9712-51-16

PROG.=VER 06/09/89
04-08-1993 09:10:59

Initial Meter Volume (Cubic Feet)=	599.756
Final Meter Volume (Cubic Feet)=	635.116
Meter Factor=	1.019
Final Leak Rate (cu ft/min)=	0.002
Net Meter Volume (Cubic Feet)=	36.032
Gas Volume (Dry Standard Cubic Feet)=	34.890
Barometric Pressure (in Hg)=	29.60
Static Pressure (Inches H20)=	-1.20
Percent Oxygen=	20.5
Percent Carbon Dioxide=	0.0
Moisture Collected (ml)=	5.3
Percent Water=	0.7
Average Meter Temperature (F)=	81
Average Delta H (in H20)=	1.00
Average Delta P (in H20)=	0.180
Average Stack Temperature (F)=	55
Dry Molecular Weight=	28.82
Wet Molecular Weight=	28.74
Average Square Root of Delta P (in H20)=	0.4199
% Isokinetic=	117.4
Pitot Coefficient=	0.83
Sampling Time (Minutes)=	62.5
Nozzle Diameter (Inches)=	0.249
Stack Axis #1 (Inches)=	96.0
Stack Axis #2 (Inches)=	96.0
Rectangular Stack	
Stack Area (Square Feet)=	64.00
Stack Velocity (Actual, Feet/min)=	1,399
Flow Rate (Actual, Cubic ft/min)=	89,530
Flow rate (Standard, Wet, Cubic ft/min)=	90,601
Flow Rate (Standard, Dry, Cubic ft/min)=	89,957

Particulate Loading - Front Half

		Corr. to 7% O2	& 12% CO2
Particulate Weight (g)=	0.0000		
Particulate Loading, Dry Std. (gr/scf)=	0.0000	0.0000	0.0000
Particulate Loading, Actual (gr/cu ft)=	0.0000		
Emission Rate (lb/hr)=	0.00		

No Back Half Analysis

* * METRIC UNITS * *

FILE NAME - HCSS26
RUN # - HCSS RUN NO. 26
LOCATION - DERAMUS FIELD STATION
DATE - 4/6/93
PROJECT # - 9712-51-16

PROG.=VER 06/09/89
04-08-1993 09:11:00

Initial Meter Volume (Cubic Meters)=	16.983
Final Meter Volume (Cubic Meters)=	17.984
Meter Factor=	1.019
Final Leak Rate (cu m/min)=	0.0001
Net Meter Volume (Cubic Meters)=	1.020
Gas Volume (Dry Standard Cubic Meters)=	0.988
Barometric Pressure (mm Hg)=	752
Static Pressure (mm H20)=	-30
Percent Oxygen=	20.5
Percent Carbon Dioxide=	0.0
Moisture Collected (ml)=	5.3
Percent Water=	0.7
Average Meter Temperature (C)=	27
Average Delta H (mm H20)=	25.4
Average Delta P (mm H20)=	4.6
Average Stack Temperature (C)=	13
Dry Molecular Weight=	28.82
Wet Molecular Weight=	28.74
Average Square Root of Delta P (mm H20)=	2.1163
% Isokinetic=	117.4
Pitot Coefficient=	0.83
Sampling Time (Minutes)=	62.5
Nozzle Diameter (mm)=	6.32
Stack Axis #1 (Meters)=	2.438
Stack Axis #2 (Meters)=	2.438
Rectangular Stack	
Stack Area (Square Meters)=	5.946
Stack Velocity (Actual, m/min)=	426
Flow rate (Actual, Cubic m/min)=	2,535
Flow rate (Standard, Wet, Cubic m/min)=	2,566
Flow rate (Standard, Dry, Cubic m/min)=	2,547

Particulate Loading - Front Half

		Corr. to 7% O2	& 12% CO2
Particulate Weight (g)=	0.0000		
Particulate Loading, Dry Std. (mg/cu m)=	0.0	0.0	0.0
Particulate Loading, Actual (mg/cu m)=	0.0		
Emission Rate (kg/hr)=	0.00		

No Back Half Analysis

FILE NAME - HCSS26
RUN # - HCSS RUN NO. 26
LOCATION - DERAMUS FIELD STATION
DATE - 4/6/93
PROJECT # - 9712-51-16

PROG.=VER 06/09/89
04-08-1993 09:11:00

Point #	Delta P (in. H20)	Delta H (in. H20)	Stack T (F)	Meter T In(F)	Meter T Out(F)
1	0.170	1.00	54	76	76
2	0.240	1.00	53	77	76
3	0.230	1.00	54	78	76
4	0.230	1.00	54	79	77
5	0.150	1.00	54	80	77
6	0.150	1.00	55	79	78
7	0.250	1.00	54	82	78
8	0.260	1.00	55	82	78
9	0.200	1.00	55	83	78
10	0.170	1.00	54	84	78
11	0.130	1.00	54	82	79
12	0.190	1.00	56	84	79
13	0.250	1.00	56	84	80
14	0.240	1.00	57	85	80
15	0.100	1.00	56	86	80
16	0.100	1.00	55	81	80
17	0.120	1.00	55	82	80
18	0.120	1.00	56	83	80
19	0.120	1.00	56	84	80
20	0.140	1.00	57	85	80
21	0.230	1.00	52	82	80
22	0.200	1.00	52	84	80
23	0.200	1.00	53	84	80
24	0.170	1.00	55	85	81
25	0.140	1.00	54	86	81

Fraction	Final Wt. (g)	Tare Wt. (g)	Blank Wt. (g)	Net Wt. (g)
DRY CATCH	0.0000	0.0000	0.0000	0.0000
FILTER	0.0000	0.0000	0.0000	0.0000

Fraction	Final Wt. (g)	Tare Wt. (g)	Vol. (ml)	Net Wt. (g)
PROBE RINSE	0.0000	0.0000	0.0	0.0000
IMPINGERS	0.0000	0.0000	0.0	0.0000

Probe Rinse Blank (mg/ml)= 0.0000
Impinger Blank (mg/ml)= 0.0000

SECTION 3

HCSS PARTICULATE SIZING DISTRIBUTION REPORT

INPUT DATA FOR FILE PREHCS-1
TEST DATE - 3/23/93
PROJECT # - 9712M-51-16
TEST SITE - DERAMUS FIELD STATION
RUN ID - PRELIMINARY HCSS RUN 1

% WATER= 0.90
% CARBON DIOXIDE= 0.00
% CARBON MONOXIDE= 0.00
% OXYGEN= 20.90

ANDERSEN HCSS IMPACTOR

STACK TEMPERATURE= 42.0 DEGREES F.
BAR. PRESSURE= 29.12 INCHES HG
STATIC PRESSURE= -0.50 INCHES H20
AVE. DELTA P= 0.25 INCHES H20
PITOT COEFF.= .84
METER TEMP.= 72.0 DEGREES F.
PROBE DIA.= 0.249 INCHES

SAMPLING TIME= 62.5 MIN.
PRESSURE DROP= 0.00 INCHES HG
SAMPLER TEMP. = 42.0 DEGREES F.
PARTICLE DENS= 1
METER VOL.= 35.797 CUBIC FEET
DELTA H= 1.00 INCHES H20

CALCULATED RESULTS

SAMPLE VOL.-DRY STD.= 34.651 CU. FT.
SAMPLE VOL.-WET STD.= 34.966 CU. FT.
STACK VELOCITY= 1682.7 FT./MIN.
NOZZLE VELOCITY= 1618.8 FT./MIN.
MASS COLLECTED= 570.922 MG.
LOADING= 0.25198 GRAIN/SCF
LOADING(DRY)= 0.25427 GRAIN/SCF

DRY MOLECULAR WT.= 28.84
WET MOLECULAR WT.= 28.74
% ISOKINETIC= 96.2
SAMPLING RATE-ACTUAL= 0.547 CU. FT/MIN
CYCLONE BLANK= 0.000 MG.
STAGE BLANK= 0.000 MG.
FILTER BLANK= 0.000 MG.

STAGE #	1	2	CYCLONE	FILTER
FINAL WT (MG)	166696.70	163119.70	161798.40	1739.40
TARE WT (MG)	166129.10	163117.80	161797.00	1743.80
NET WT (MG) CORRECTED	567.61	1.91	1.41	0.00
FRACTION % OF TOTAL	99.42	0.33	0.25	0.00
CUM. % WITH FILTER	99.42	99.75	100.00	100.00
FRACTION % WITHOUT FILTER	99.42	0.33	0.25	
CUM. % WITHOUT FILTER	99.42	99.75	100.00	
JET VEL. (CM/SEC)	0	0	0	
D50 SIZE (MICRONS)	9.91	5.58	1.13	<1.13
DM/DLOGD (GRAINS/SCF)		0.00338	0.00089	
GEO MEAN (MICRONS)		7.44	2.51	<2.51
PARTICLE COUNT		5.62D+04	4.40D+04	

INPUT DATA FOR FILE PREHCS2
TEST DATE - 3/23/93
PROJECT # - 9712M-51-16
TEST SITE - DERAMUS FIELD STATION
RUN ID - PRELIMINARY HCSS RUN 2

% WATER= 0.90
% CARBON DIOXIDE= 0.00
% CARBON MONOXIDE= 0.00
% OXYGEN= 20.90

ANDERSEN HCSS IMPACTOR

STACK TEMPERATURE= 42.0 DEGREES F.
BAR. PRESSURE= 29.12 INCHES HG
STATIC PRESSURE= -0.50 INCHES H20
AVE. DELTA P= 0.25 INCHES H20
PITOT COEFF.= .84
METER TEMP.= 76.0 DEGREES F.
PROBE DIA.= 0.249 INCHES

SAMPLING TIME= 62.5 MIN.
PRESSURE DROP= 0.00 INCHES HG
SAMPLER TEMP. = 42.0 DEGREES F.
PARTICLE DENS= 1
METER VOL.= 35.462 CUBIC FEET
DELTA H= 1.00 INCHES H20

CALCULATED RESULTS

SAMPLE VOL.-DRY STD.= 34.071 CU. FT.
SAMPLE VOL.-WET STD.= 34.380 CU. FT.
STACK VELOCITY= 1662.7 FT./MIN.
NOZZLE VELOCITY= 1591.7 FT./MIN.
MASS COLLECTED= 1088.794 MG.
LOADING= 0.48873 GRAIN/SCF
LOADING(DRY)= 0.49317 GRAIN/SCF

DRY MOLECULAR WT.= 28.84
WET MOLECULAR WT.= 28.74
% ISOKINETIC= 95.7
SAMPLING RATE-ACTUAL= 0.538 CU. FT/MIN
CYCLONE BLANK= 0.000 MG.
STAGE BLANK= 0.000 MG.
FILTER BLANK= 0.000 MG.

STAGE #	1	2	CYCLONE	FILTER
FINAL WT (MG)	167221.70	164545.60	170014.40	1510.20
TARE WT (MG)	166141.70	164537.00	170014.50	1510.00
NET WT (MG) CORRECTED	1080.00	8.59	0.00	0.20
FRACTION % OF TOTAL	99.19	0.79	0.00	0.02
CUM. % WITH FILTER	99.19	99.98	99.98	100.00
FRACTION % WITHOUT FILTER	99.21	0.79	0.00	
CUM. % WITHOUT FILTER	99.21	100.00	100.00	
JET VEL. (CM/SEC)	0	0	0	
D50 SIZE (MICRONS)	9.98	5.63	1.15	<1.15
DM/DLOGD (GRAINS/SCF)		0.01554	0.00000	
GEO MEAN (MICRONS)		7.50	2.54	<2.54
PARTICLE COUNT		2.57D+05	0.00D+00	

INPUT DATA FOR FILE PREHCS-3
TEST DATE - 3/24/93
PROJECT # - 9712M-51-16
TEST SITE - DERAMUS FIELD STATION
RUN ID - PRELIMINARY HCSS RUN 3

% WATER= 0.90
% CARBON DIOXIDE= 0.00
% CARBON MONOXIDE= 0.00
% OXYGEN= 20.90

ANDERSEN HCSS IMPACTOR

STACK TEMPERATURE=	42.0 DEGREES F.	SAMPLING TIME=	62.5 MIN.
BAR. PRESSURE=	29.07 INCHES HG	PRESSURE DROP=	0.00 INCHES HG
STATIC PRESSURE=	-0.20 INCHES H20	SAMPLER TEMP. =	42.0 DEGREES F.
AVE. DELTA P=	0.02 INCHES H20	PARTICLE DENS=	1
PITOT COEFF.=	.84	METER VOL.=	27.664 CUBIC FEET
METER TEMP.=	73.0 DEGREES F.	DELTA H=	0.60 INCHES H20
PROBE DIA.=	0.376 INCHES		

CALCULATED RESULTS

SAMPLE VOL.-DRY STD.=	26.656 CU. FT.	DRY MOLECULAR WT.=	28.84
SAMPLE VOL.-WET STD.=	26.898 CU. FT.	WET MOLECULAR WT.=	28.74
STACK VELOCITY=	484.1 FT./MIN.	% ISOKINETIC=	112.9
NOZZLE VELOCITY=	546.7 FT./MIN.	SAMPLING RATE-ACTUAL=	0.422 CU. FT/MIN
MASS COLLECTED=	47.791 MG.	CYCLONE BLANK=	0.000 MG.
LOADING=	0.02742 GRAIN/SCF	STAGE BLANK=	0.000 MG.
LOADING(DRY)=	0.02767 GRAIN/SCF	FILTER BLANK=	0.000 MG.

STAGE #	1	2	CYCLONE	FILTER
FINAL WT (MG)	169091.60	164335.60	164335.60	1850.00
TARE WT (MG)	169049.20	164929.20	164335.10	1845.10
NET WT (MG) CORRECTED	42.39	0.00	0.50	4.90
FRACTION % OF TOTAL	88.70	0.00	1.05	10.25
CUM. % WITH FILTER	88.70	88.70	89.75	100.00
FRACTION % WITHOUT FILTER	98.83	0.00	1.17	
CUM. % WITHOUT FILTER	98.83	98.83	100.00	
JET VEL. (CM/SEC)	0	0	0	
D50 SIZE (MICRONS)	10.98	6.37	1.48	<1.48
DM/DLOGD (GRAINS/SCF)		0.00000	0.00045	
GEO MEAN (MICRONS)		8.37	3.07	<3.07
PARTICLE COUNT		0.00D+00	1.82D+04	

INPUT DATA FOR FILE PREHCS-4

TEST DATE - 3/24/93		% WATER=	0.70
PROJECT # - 9712M-51-15		% CARBON DIOXIDE=	0.00
TEST SITE - DERAMUS FIELD STATION		% CARBON MONOXIDE=	0.00
RUN ID - PRELIMINARY HCSS 4		% OXYGEN=	20.90

ANDERSEN HCSS IMPACTOR

STACK TEMPERATURE=	43.0 DEGREES F.	SAMPLING TIME=	62.5 MIN.
BAR. PRESSURE=	29.07 INCHES HG	PRESSURE DROP=	0.00 INCHES HG
STATIC PRESSURE=	-0.20 INCHES H20	SAMPLER TEMP. =	43.0 DEGREES F.
AVE. DELTA P=	0.03 INCHES H20	PARTICLE DENS=	1
PITOT COEFF.=	.84	METER VOL.=	27.967 CUBIC FEET
METER TEMP.=	76.0 DEGREES F.	DELTA H=	0.60 INCHES H20
PROBE DIA.=	0.376 INCHES		

CALCULATED RESULTS

SAMPLE VOL.-DRY STD.=	26.797 CU. FT.	DRY MOLECULAR WT.=	28.84
SAMPLE VOL.-WET STD.=	26.986 CU. FT.	WET MOLECULAR WT.=	28.76
STACK VELOCITY=	597.9 FT./MIN.	% ISOKINETIC=	91.9
NOZZLE VELOCITY=	549.5 FT./MIN.	SAMPLING RATE-ACTUAL=	0.424 CU. FT/MIN
MASS COLLECTED=	10.609 MG.	CYCLONE BLANK=	0.000 MG.
LOADING=	0.00607 GRAIN/SCF	STAGE BLANK=	0.000 MG.
LOADING(DRY)=	0.00611 GRAIN/SCF	FILTER BLANK=	0.000 MG.

STAGE #	1	2	CYCLONE	FILTER
FINAL WT (MG)	167007.70	166400.50	169152.60	1877.00
TARE WT (MG)	166998.10	166399.50	169154.90	1880.80
NET WT (MG) CORRECTED	9.61	1.00	0.00	0.00
FRACTION % OF TOTAL	90.57	9.43	0.00	0.00
CUM. % WITH FILTER	90.57	100.00	100.00	100.00
FRACTION % WITHOUT FILTER	90.57	9.43	0.00	
CUM. % WITHOUT FILTER	90.57	100.00	100.00	
JET VEL. (CM/SEC)	0	0	0	
D50 SIZE (MICRONS)	10.97	6.36	1.47	<1.47
DM/DLOGD (GRAINS/SCF)		0.00242	0.00000	
GEO MEAN (MICRONS)		8.35	3.06	<3.06
PARTICLE COUNT		3.58D+04	0.00D+00	

INPUT DATA FOR FILE PREHCS-5
TEST DATE - 3/26/93
PROJECT # - 9712M-51-16
TEST SITE - DERAMUS FIELD STATION
RUN ID - PRELIMINARY HCSS RUN 5

% WATER= 0.80
% CARBON DIOXIDE= 0.00
% CARBON MONOXIDE= 0.00
% OXYGEN= 20.90

ANDERSEN HCSS IMPACTOR

STACK TEMPERATURE=	48.0 DEGREES F.	SAMPLING TIME=	62.5 MIN.
BAR. PRESSURE=	29.16 INCHES HG	PRESSURE DROP=	0.00 INCHES HG
STATIC PRESSURE=	-0.40 INCHES H20	SAMPLER TEMP. =	48.0 DEGREES F.
AVE. DELTA P=	0.09 INCHES H20	PARTICLE DENS=	1
PITOT COEFF.=	.84	METER VOL.=	34.875 CUBIC FEET
METER TEMP.=	75.0 DEGREES F.	DELTA H=	0.95 INCHES H20
PROBE DIA.=	0.311 INCHES		

CALCULATED RESULTS

SAMPLE VOL.-DRY STD.=	33.611 CU. FT.	DRY MOLECULAR WT.=	28.84
SAMPLE VOL.-WET STD.=	33.882 CU. FT.	WET MOLECULAR WT.=	28.75
STACK VELOCITY=	1012.2 FT./MIN.	% ISOKINETIC=	100.4
NOZZLE VELOCITY=	1015.9 FT./MIN.	SAMPLING RATE-ACTUAL=	0.536 CU. FT/MIN
MASS COLLECTED=	576.125 MG.	CYCLONE BLANK=	0.000 MG.
LOADING=	0.26241 GRAIN/SCF	STAGE BLANK=	0.000 MG.
LOADING(DRY)=	0.26452 GRAIN/SCF	FILTER BLANK=	0.000 MG.

STAGE #	1	2	CYCLONE	FILTER
FINAL WT (MG)	164051.40	158943.20	163357.50	1735.10
TARE WT (MG)	163585.60	158835.80	163354.60	1735.30
NET WT (MG) CORRECTED	465.81	107.41	2.91	0.00
FRACTION % OF TOTAL	80.85	18.64	0.50	0.00
CUM. % WITH FILTER	80.85	99.50	100.00	100.00
FRACTION % WITHOUT FILTER	80.85	18.64	0.50	
CUM. % WITHOUT FILTER	80.85	99.50	100.00	
JET VEL. (CM/SEC)	0	0	0	
D50 SIZE (MICRONS)	10.03	5.67	1.17	<1.17
DM/DLOGD (GRAINS/SCF)		0.19721	0.00193	
GEO MEAN (MICRONS)		7.54	2.57	<2.57
PARTICLE COUNT		3.24D+06	9.28D+04	

INPUT DATA FOR FILE PREHCS-6
TEST DATE - 3/25/93
PROJECT # - 9712M-51-16
TEST SITE - DERAMUS FIELD STATION
RUN ID - PRELIMINARY HCSS RUN 6

% WATER= 1.30
% CARBON DIOXIDE= 0.00
% CARBON MONOXIDE= 0.00
% OXYGEN= 20.90

ANDERSEN HCSS IMPACTOR

STACK TEMPERATURE= 51.0 DEGREES F.
BAR. PRESSURE= 29.16 INCHES HG
STATIC PRESSURE= -0.40 INCHES H20
AVE. DELTA P= 0.12 INCHES H20
PITOT COEFF.= .84
METER TEMP.= 78.0 DEGREES F.
PROBE DIA.= 0.310 INCHES

SAMPLING TIME= 62.5 MIN.
PRESSURE DROP= 0.00 INCHES HG
SAMPLER TEMP. = 51.0 DEGREES F.
PARTICLE DENS= 1
METER VOL.= 34.820 CUBIC FEET
DELTA H= 0.95 INCHES H20

CALCULATED RESULTS

SAMPLE VOL.-DRY STD.= 33.371 CU. FT.
SAMPLE VOL.-WET STD.= 33.811 CU. FT.
STACK VELOCITY= 1166.9 FT./MIN.
NOZZLE VELOCITY= 1026.4 FT./MIN.
MASS COLLECTED= 935.281 MG.
LOADING= 0.42690 GRAIN/SCF
LOADING(DRY)= 0.43252 GRAIN/SCF
STACK WATER SATURATION @ 1.3%
CONDENSATION PROBABLE IN IMPACTOR @ 1.3%

DRY MOLECULAR WT.= 28.84
WET MOLECULAR WT.= 28.70
% ISOKINETIC= 88.0
SAMPLING RATE-ACTUAL= 0.538 CU. FT/MIN
CYCLONE BLANK= 0.000 MG.
STAGE BLANK= 0.000 MG.
FILTER BLANK= 0.000 MG.

STAGE #	1	2	CYCLONE	FILTER
FINAL WT (MG)	160622.60	171779.60	162897.50	1767.90
TARE WT (MG)	159693.40	171776.10	162894.90	1770.00
NET WT (MG) CORRECTED	929.19	3.50	2.59	0.00
FRACTION % OF TOTAL	99.35	0.37	0.28	0.00
CUM. % WITH FILTER	99.35	99.72	100.00	100.00
FRACTION % WITHOUT FILTER	99.35	0.37	0.28	
CUM. % WITHOUT FILTER	99.35	99.72	100.00	
JET VEL. (CM/SEC)	0	0	0	
D50 SIZE (MICRONS)	10.03	5.67	1.17	<1.17
DM/DLOGD (GRAINS/SCF)		0.00643	0.00173	
GEO MEAN (MICRONS)		7.54	2.58	<2.58
PARTICLE COUNT		1.06D+05	8.31D+04	

INPUT DATA FOR FILE HCS-7
TEST DATE - 3/29/93
PROJECT # - 9712-51-16
TEST SITE - DERAMUS FIELD STATION
RUN ID - HCSS RUN NO. 7

% WATER= 1.60
% CARBON DIOXIDE= 0.00
% CARBON MONOXIDE= 0.00
% OXYGEN= 20.90

ANDERSEN HCSS IMPACTOR

STACK TEMPERATURE= 66.0 DEGREES F.
BAR. PRESSURE= 28.84 INCHES HG
STATIC PRESSURE= -0.47 INCHES H20
AVE. DELTA P= 0.10 INCHES H20
PITOT COEFF.= .83
METER TEMP.= 77.0 DEGREES F.
PROBE DIA.= 0.310 INCHES

SAMPLING TIME= 62.5 MIN.
PRESSURE DROP= 0.00 INCHES HG
SAMPLER TEMP. = 66.0 DEGREES F.
PARTICLE DENS= 1
METER VOL.= 35.802 CUBIC FEET
DELTA H= 1.00 INCHES H20

CALCULATED RESULTS

SAMPLE VOL.-DRY STD.= 34.004 CU. FT.
SAMPLE VOL.-WET STD.= 34.557 CU. FT.
STACK VELOCITY= 1069.1 FT./MIN.
NOZZLE VELOCITY= 1092.0 FT./MIN.
MASS COLLECTED= 231.300 MG.
LOADING= 0.10329 GRAIN/SCF
LOADING(DRY)= 0.10497 GRAIN/SCF

DRY MOLECULAR WT.= 28.84
WET MOLECULAR WT.= 28.66
% ISOKINETIC= 102.1
SAMPLING RATE-ACTUAL= 0.572 CU. FT/MIN
CYCLONE BLANK= 0.000 MG.
STAGE BLANK= 0.000 MG.
FILTER BLANK= 0.000 MG.

STAGE #	1	2	CYCLONE	FILTER
FINAL WT (MG)	165581.30	172185.30	164758.40	1940.70
TARE WT (MG)	165497.40	172048.00	164748.60	1940.40
NET WT (MG) CORRECTED	83.89	137.30	9.81	0.30
FRACTION % OF TOTAL	36.27	59.36	4.24	0.13
CUM. % WITH FILTER	36.27	95.63	99.87	100.00
FRACTION % WITHOUT FILTER	36.32	59.44	4.25	
CUM. % WITHOUT FILTER	36.32	95.75	100.00	
JET VEL. (CM/SEC)	0	0	0	
D50 SIZE (MICRONS)	9.89	5.54	1.14	<1.14
DM/DLOGD (GRAINS/SCF)		0.24350	0.00638	
GEO MEAN (MICRONS)		7.40	2.51	<2.51
PARTICLE COUNT		4.07D+06	3.14D+05	

INPUT DATA FOR FILE HCS-8
TEST DATE - 3/29/93
PROJECT # - 9712M-51-16
TEST SITE - DERAMUS FIELD STATION
RUN ID - HCSS RUN NO.8

% WATER= 1.50
% CARBON DIOXIDE= 0.00
% CARBON MONOXIDE= 0.00
% OXYGEN= 20.90

ANDERSEN HCSS IMPACTOR

STACK TEMPERATURE= 66.0 DEGREES F.
BAR. PRESSURE= 28.84 INCHES HG
STATIC PRESSURE= -0.47 INCHES H20
AVE. DELTA P= 0.11 INCHES H20
PITOT COEFF.= .84
METER TEMP.= 79.0 DEGREES F.
PROBE DIA.= 0.311 INCHES

SAMPLING TIME= 62.5 MIN.
PRESSURE DROP= 0.00 INCHES HG
SAMPLER TEMP. = 66.0 DEGREES F.
PARTICLE DENS= 1
METER VOL.= 35.914 CUBIC FEET
DELTA H= 1.00 INCHES H20

CALCULATED RESULTS

SAMPLE VOL.-DRY STD.= 33.984 CU. FT.
SAMPLE VOL.-WET STD.= 34.502 CU. FT.
STACK VELOCITY= 1129.9 FT./MIN.
NOZZLE VELOCITY= 1083.2 FT./MIN.
MASS COLLECTED= 1400.287 MG.
LOADING= 0.62634 GRAIN/SCF
LOADING(DRY)= 0.63588 GRAIN/SCF

DRY MOLECULAR WT.= 28.84
WET MOLECULAR WT.= 28.67
% ISOKINETIC= 95.9
SAMPLING RATE-ACTUAL= 0.571 CU. FT/MIN
CYCLONE BLANK= 0.000 MG.
STAGE BLANK= 0.000 MG.
FILTER BLANK= 0.000 MG.

STAGE #	1	2	CYCLONE	FILTER
FINAL WT (MG)	169678.60	165757.70	173150.60	1941.50
TARE WT (MG)	169588.70	164712.20	172888.80	1938.40
NET WT (MG) CORRECTED	89.89	1045.50	261.80	3.10
FRACTION % OF TOTAL	6.42	74.66	18.70	0.22
CUM. % WITH FILTER	6.42	81.08	99.78	100.00
FRACTION % WITHOUT FILTER	6.43	74.83	18.74	
CUM. % WITHOUT FILTER	6.43	81.26	100.00	
JET VEL. (CM/SEC)	0	0	0	
D50 SIZE (MICRONS)	9.90	5.54	1.14	<1.14
DM/DLOGD (GRAINS/SCF)		1.85789	0.17054	
GEO MEAN (MICRONS)		7.41	2.51	<2.51
PARTICLE COUNT		3.10D+07	8.39D+06	

INPUT DATA FOR FILE HCS-9
TEST DATE - 3/29/93
PROJECT # - 9712M-51-16
TEST SITE - DERAMUS FIELD STATION
RUN ID - HCSS RUN NO.9

% WATER= 2.10
% CARBON DIOXIDE= 0.00
% CARBON MONOXIDE= 0.00
% OXYGEN= 20.90

ANDERSEN HCSS IMPACTOR

STACK TEMPERATURE=	77.0 DEGREES F.	SAMPLING TIME=	62.5 MIN.
BAR. PRESSURE=	28.79 INCHES HG	PRESSURE DROP=	0.00 INCHES HG
STATIC PRESSURE=	-0.47 INCHES H20	SAMPLER TEMP. =	77.0 DEGREES F.
AVE. DELTA P=	0.09 INCHES H20	PARTICLE DENS=	1
PITOT COEFF.=	.83	METER VOL.=	35.921 CUBIC FEET
METER TEMP.=	81.0 DEGREES F.	DELTA H=	1.00 INCHES H20
PROBE DIA.=	0.310 INCHES		

CALCULATED RESULTS

SAMPLE VOL.-DRY STD.=	33.806 CU. FT.	DRY MOLECULAR WT.=	28.84
SAMPLE VOL.-WET STD.=	34.532 CU. FT.	WET MOLECULAR WT.=	28.61
STACK VELOCITY=	1020.3 FT./MIN.	% ISOKINETIC=	109.4
NOZZLE VELOCITY=	1115.9 FT./MIN.	SAMPLING RATE-ACTUAL=	0.585 CU. FT/MIN
MASS COLLECTED=	101.384 MG.	CYCLONE BLANK=	0.000 MG.
LOADING=	0.04531 GRAIN/SCF	STAGE BLANK=	0.000 MG.
LOADING(DRY)=	0.04628 GRAIN/SCF	FILTER BLANK=	0.000 MG.

STAGE #	1	2	CYCLONE	FILTER
FINAL WT (MG)	166553.70	160038.80	164830.60	1922.10
TARE WT (MG)	166470.50	160026.40	164827.20	1919.70
NET WT (MG) CORRECTED	83.20	12.39	3.39	2.40
FRACTION % OF TOTAL	82.07	12.22	3.34	2.37
CUM. % WITH FILTER	82.07	94.29	97.63	100.00
FRACTION % WITHOUT FILTER	84.06	12.52	3.43	
CUM. % WITHOUT FILTER	84.06	96.57	100.00	
JET VEL. (CM/SEC)	0	0	0	
D50 SIZE (MICRONS)	9.87	5.51	1.14	<1.14
DM/DLOGD (GRAINS/SCF)		0.02188	0.00222	
GEO MEAN (MICRONS)		7.38	2.51	<2.51
PARTICLE COUNT		3.67D+05	1.09D+05	

INPUT DATA FOR FILE HCS-10
TEST DATE - 3/29/93
PROJECT # - 9712M-51-16
TEST SITE - DERAMUS FIELD STATION
RUN ID - HCSS RUN NO. 10

% WATER= 1.90
% CARBON DIOXIDE= 0.00
% CARBON MONOXIDE= 0.00
% OXYGEN= 20.90

ANDERSEN HCSS IMPACTOR

STACK TEMPERATURE= 77.0 DEGREES F.
BAR. PRESSURE= 28.79 INCHES HG
STATIC PRESSURE= -0.47 INCHES H20
AVE. DELTA P= 0.11 INCHES H20
PITOT COEFF.= .84
METER TEMP.= 81.0 DEGREES F.
PROBE DIA.= 0.311 INCHES

SAMPLING TIME= 62.5 MIN.
PRESSURE DROP= 0.00 INCHES HG
SAMPLER TEMP. = 77.0 DEGREES F.
PARTICLE DENS= 1
METER VOL.= 36.567 CUBIC FEET
DELTA H= 1.00 INCHES H20

CALCULATED RESULTS

SAMPLE VOL.-DRY STD.= 34.414 CU. FT.
SAMPLE VOL.-WET STD.= 35.081 CU. FT.
STACK VELOCITY= 1143.5 FT./MIN.
NOZZLE VELOCITY= 1126.4 FT./MIN.
MASS COLLECTED= 126.000 MG.
LOADING= 0.05543 GRAIN/SCF
LOADING(DRY)= 0.05650 GRAIN/SCF

DRY MOLECULAR WT.= 28.84
WET MOLECULAR WT.= 28.63
% ISOKINETIC= 98.5
SAMPLING RATE-ACTUAL= 0.594 CU. FT/MIN
CYCLONE BLANK= 0.000 MG.
STAGE BLANK= 0.000 MG.
FILTER BLANK= 0.000 MG.

STAGE #	1	2	CYCLONE	FILTER
FINAL WT (MG)	170525.10	163200.80	163165.10	1695.60
TARE WT (MG)	170412.10	163195.10	163159.80	1693.60
NET WT (MG) CORRECTED	113.00	5.70	5.30	2.00
FRACTION % OF TOTAL	89.68	4.53	4.20	1.59
CUM. % WITH FILTER	89.68	94.21	98.41	100.00
FRACTION % WITHOUT FILTER	91.13	4.60	4.27	
CUM. % WITHOUT FILTER	91.13	95.73	100.00	
JET VEL. (CM/SEC)	0	0	0	
D50 SIZE (MICRONS)	9.82	5.47	1.13	<1.13
DM/DLOGD (GRAINS/SCF)		0.00988	0.00340	
GEO MEAN (MICRONS)		7.33	2.48	<2.48
PARTICLE COUNT		1.67D+05	1.69D+05	

INPUT DATA FOR FILE HCS-11
TEST DATE - 3/29/93
PROJECT # - 9712M-51-16
TEST SITE - DERAMUS FIELD STATION
RUN ID - HCSS RUN NO. 11

% WATER= 1.70
% CARBON DIOXIDE= 0.00
% CARBON MONOXIDE= 0.00
% OXYGEN= 20.90

ANDERSEN HCSS IMPACTOR

STACK TEMPERATURE=	66.0 DEGREES F.	SAMPLING TIME=	62.5 MIN.
BAR. PRESSURE=	28.66 INCHES HG	PRESSURE DROP=	0.00 INCHES HG
STATIC PRESSURE=	-0.47 INCHES H20	SAMPLER TEMP. =	66.0 DEGREES F.
AVE. DELTA P=	0.09 INCHES H20	PARTICLE DENS=	1
PITOT COEFF.=	.83	METER VOL.=	35.474 CUBIC FEET
METER TEMP.=	70.0 DEGREES F.	DELTA H=	1.00 INCHES H20
PROBE DIA.=	0.310 INCHES		

CALCULATED RESULTS

SAMPLE VOL.-DRY STD.=	33.925 CU. FT.	DRY MOLECULAR WT.=	28.84
SAMPLE VOL.-WET STD.=	34.512 CU. FT.	WET MOLECULAR WT.=	28.65
STACK VELOCITY=	1028.4 FT./MIN.	% ISOKINETIC=	106.7
NOZZLE VELOCITY=	1097.4 FT./MIN.	SAMPLING RATE-ACTUAL=	0.575 CU. FT/MIN
MASS COLLECTED=	97.594 MG.	CYCLONE BLANK=	0.000 MG.
LOADING=	0.04364 GRAIN/SCF	STAGE BLANK=	0.000 MG.
LOADING(DRY)=	0.04439 GRAIN/SCF	FILTER BLANK=	0.000 MG.

STAGE #	1	2	CYCLONE	FILTER
FINAL WT (MG)	162710.70	164048.30	166902.60	1748.20
TARE WT (MG)	162659.60	164014.50	166894.90	1743.20
NET WT (MG) CORRECTED	51.11	33.80	7.69	5.00
FRACTION % OF TOTAL	52.37	34.63	7.88	5.12
CUM. % WITH FILTER	52.37	87.00	94.88	100.00
FRACTION % WITHOUT FILTER	55.20	36.50	8.30	
CUM. % WITHOUT FILTER	55.20	91.70	100.00	
JET VEL. (CM/SEC)	0	0	0	
D50 SIZE (MICRONS)	9.87	5.52	1.13	<1.13
DM/DLOGD (GRAINS/SCF)		0.05995	0.00500	
GEO MEAN (MICRONS)		7.38	2.50	<2.50
PARTICLE COUNT		1.00D+06	2.47D+05	

INPUT DATA FOR FILE HCS-12
TEST DATE - 3/29/93
PROJECT # - 9712M-51-16
TEST SITE - DERAMUS FIELD STATION
RUN ID - HCSS RUN NO. 12

% WATER= 1.30
% CARBON DIOXIDE= 0.00
% CARBON MONOXIDE= 0.00
% OXYGEN= 20.90

ANDERSEN HCSS IMPACTOR

STACK TEMPERATURE=	65.0 DEGREES F.	SAMPLING TIME=	62.5 MIN.
BAR. PRESSURE=	28.66 INCHES HG	PRESSURE DROP=	0.00 INCHES HG
STATIC PRESSURE=	-0.47 INCHES H20	SAMPLER TEMP. =	65.0 DEGREES F.
AVE. DELTA P=	0.09 INCHES H20	PARTICLE DENS=	1
PITOT COEFF.=	.84	METER VOL.=	37.149 CUBIC FEET
METER TEMP.=	72.0 DEGREES F.	DELTA H=	1.00 INCHES H20
PROBE DIA.=	0.311 INCHES		

CALCULATED RESULTS

SAMPLE VOL.-DRY STD.=	35.393 CU. FT.	DRY MOLECULAR WT.=	28.84
SAMPLE VOL.-WET STD.=	35.860 CU. FT.	WET MOLECULAR WT.=	28.70
STACK VELOCITY=	1056.0 FT./MIN.	% ISOKINETIC=	107.1
NOZZLE VELOCITY=	1130.8 FT./MIN.	SAMPLING RATE-ACTUAL=	0.597 CU. FT/MIN
MASS COLLECTED=	132.588 MG.	CYCLONE BLANK=	0.000 MG.
LOADING=	0.05706 GRAIN/SCF	STAGE BLANK=	0.000 MG.
LOADING(DRY)=	0.05781 GRAIN/SCF	FILTER BLANK=	0.000 MG.

STAGE #	1	2	CYCLONE	FILTER
FINAL WT (MG)	163717.30	165039.80	167566.30	1554.40
TARE WT (MG)	163661.70	164972.90	167557.10	1553.50
NET WT (MG) CORRECTED	55.59	66.89	9.20	0.90
FRACTION % OF TOTAL	41.93	50.45	6.94	0.68
CUM. % WITH FILTER	41.93	92.38	99.32	100.00
FRACTION % WITHOUT FILTER	42.22	50.79	6.99	
CUM. % WITHOUT FILTER	42.22	93.01	100.00	
JET VEL. (CM/SEC)	0	0	0	
D50 SIZE (MICRONS)	9.73	5.42	1.09	<1.09
DM/DLOGD (GRAINS/SCF)		0.11325	0.00569	
GEO MEAN (MICRONS)		7.26	2.43	<2.43
PARTICLE COUNT		1.93D+06	2.90D+05	

INPUT DATA FOR FILE HCS-13
TEST DATE - 3/30/93
PROJECT # - 9712M-51-16
TEST SITE - DERAMUS FIELD STATION
RUN ID - HCSS RUN NO. 13

% WATER= 2.14
% CARBON DIOXIDE= 0.00
% CARBON MONOXIDE= 0.00
% OXYGEN= 20.90

ANDERSEN HCSS IMPACTOR

STACK TEMPERATURE=	64.0 DEGREES F.	SAMPLING TIME=	62.5 MIN.
BAR. PRESSURE=	28.60 INCHES HG	PRESSURE DROP=	0.00 INCHES HG
STATIC PRESSURE=	-0.55 INCHES H20	SAMPLER TEMP. =	65.0 DEGREES F.
AVE. DELTA P=	0.21 INCHES H20	PARTICLE DENS=	1
PITOT COEFF.=	.8339	METER VOL.=	36.020 CUBIC FEET
METER TEMP.=	77.0 DEGREES F.	DELTA H=	1.00 INCHES H20
PROBE DIA.=	0.249 INCHES		

CALCULATED RESULTS

SAMPLE VOL.-DRY STD.=	33.927 CU. FT.	DRY MOLECULAR WT.=	28.84
SAMPLE VOL.-WET STD.=	34.669 CU. FT.	WET MOLECULAR WT.=	28.60
STACK VELOCITY=	1562.2 FT./MIN.	% ISOKINETIC=	109.2
NOZZLE VELOCITY=	1706.2 FT./MIN.	SAMPLING RATE-ACTUAL=	0.577 CU. FT/MIN
MASS COLLECTED=	694.491 MG.	CYCLONE BLANK=	0.000 MG.
LOADING=	0.30914 GRAIN/SCF	STAGE BLANK=	0.000 MG.
LOADING(DRY)=	0.31590 GRAIN/SCF	FILTER BLANK=	0.000 MG.

STACK WATER SATURATION @ 2.1%

STAGE #	1	2	CYCLONE	FILTER
FINAL WT (MG)	166964.30	171068.90	171504.80	1896.70
TARE WT (MG)	166648.70	170708.70	171486.20	1896.60
NET WT (MG) CORRECTED	315.59	360.20	18.59	0.10
FRACTION % OF TOTAL	45.44	51.87	2.68	0.01
CUM. % WITH FILTER	45.44	97.31	99.99	100.00
FRACTION % WITHOUT FILTER	45.45	51.87	2.68	
CUM. % WITHOUT FILTER	45.45	97.32	100.00	
JET VEL. (CM/SEC)	0	0	0	
D50 SIZE (MICRONS)	9.85	5.51	1.12	<1.12
DM/DLOGD (GRAINS/SCF)		0.63529	0.01200	
GEO MEAN (MICRONS)		7.36	2.49	<2.49
PARTICLE COUNT		1.07D+07	5.97D+05	

INPUT DATA FOR FILE HCS-14

TEST DATE - 3/30/93		% WATER=	2.05
PROJECT # - 9712M-51-16		% CARBON DIOXIDE=	0.00
TEST SITE - DERAMUS FIELD STATION		% CARBON MONOXIDE=	0.00
RUN ID - HCSS RUN NO.14		% OXYGEN=	20.90

ANDERSEN HCSS IMPACTOR

STACK TEMPERATURE=	63.0 DEGREES F.	SAMPLING TIME=	62.5 MIN.
BAR. PRESSURE=	28.60 INCHES HG	PRESSURE DROP=	0.00 INCHES HG
STATIC PRESSURE=	-0.55 INCHES H20	SAMPLER TEMP. =	63.0 DEGREES F.
AVE. DELTA P=	0.20 INCHES H20	PARTICLE DENS=	1
PITOT COEFF.=	.84	METER VOL.=	36.360 CUBIC FEET
METER TEMP.=	79.0 DEGREES F.	DELTA H=	1.00 INCHES H20
PROBE DIA.=	0.249 INCHES		

CALCULATED RESULTS

SAMPLE VOL.-DRY STD.=	34.120 CU. FT.	DRY MOLECULAR WT.=	28.84
SAMPLE VOL.-WET STD.=	34.835 CU. FT.	WET MOLECULAR WT.=	28.61
STACK VELOCITY=	1533.6 FT./MIN.	% ISOKINETIC=	111.6
NOZZLE VELOCITY=	1711.0 FT./MIN.	SAMPLING RATE-ACTUAL=	0.579 CU. FT/MIN
MASS COLLECTED=	329.597 MG.	CYCLONE BLANK=	0.000 MG.
LOADING=	0.14602 GRAIN/SCF	STAGE BLANK=	0.000 MG.
LOADING(DRY)=	0.14907 GRAIN/SCF	FILTER BLANK=	0.000 MG.

STACK WATER SATURATION @ 2.0%
CONDENSATION PROBABLE IN IMPACTOR @ 2.0%

STAGE #	1	2	CYCLONE	FILTER
FINAL WT (MG)	161625.50	170466.00	166100.20	1863.00
TARE WT (MG)	161580.00	170197.20	166087.70	1860.20
NET WT (MG) CORRECTED	45.50	268.80	12.50	2.80
FRACTION % OF TOTAL	13.80	81.55	3.79	0.85
CUM. % WITH FILTER	13.80	95.36	99.15	100.00
FRACTION % WITHOUT FILTER	13.92	82.25	3.83	
CUM. % WITHOUT FILTER	13.92	96.17	100.00	
JET VEL. (CM/SEC)	0	0	0	
D50 SIZE (MICRONS)	9.83	5.50	1.12	<1.12
DM/DLOGD (GRAINS/SCF)		0.47174	0.00801	
GEO MEAN (MICRONS)		7.35	2.48	<2.48
PARTICLE COUNT		7.94D+06	4.00D+05	

INPUT DATA FOR FILE HCS-15
TEST DATE - 4/2/93
PROJECT # - 9712M-51-16
TEST SITE - DERAMUS FIELD STATION
RUN ID - HCSS RUN NO. 15

% WATER= 0.80
% CARBON DIOXIDE= 0.00
% CARBON MONOXIDE= 0.00
% OXYGEN= 20.90

ANDERSEN HCSS IMPACTOR

STACK TEMPERATURE=	38.0 DEGREES F.	SAMPLING TIME=	62.5 MIN.
BAR. PRESSURE=	29.00 INCHES HG	PRESSURE DROP=	0.00 INCHES HG
STATIC PRESSURE=	-0.13 INCHES H20	SAMPLER TEMP. =	38.0 DEGREES F.
AVE. DELTA P=	0.02 INCHES H20	PARTICLE DENS=	1
PITOT COEFF.=	.8159	METER VOL.=	44.529 CUBIC FEET
METER TEMP.=	68.0 DEGREES F.	DELTA H=	2.00 INCHES H20
PROBE DIA.=	0.500 INCHES		

CALCULATED RESULTS

SAMPLE VOL.-DRY STD.=	43.361 CU. FT.	DRY MOLECULAR WT.=	28.84
SAMPLE VOL.-WET STD.=	43.711 CU. FT.	WET MOLECULAR WT.=	28.75
STACK VELOCITY=	457.4 FT./MIN.	% ISOKINETIC=	109.2
NOZZLE VELOCITY=	499.5 FT./MIN.	SAMPLING RATE-ACTUAL=	0.681 CU. FT/MIN
MASS COLLECTED=	145.500 MG.	CYCLONE BLANK=	0.000 MG.
LOADING=	0.05137 GRAIN/SCF	STAGE BLANK=	0.000 MG.
LOADING(DRY)=	0.05178 GRAIN/SCF	FILTER BLANK=	0.000 MG.

STACK WATER SATURATION @ 0.8%
CONDENSATION PROBABLE IN IMPACTOR @ 0.8%

STAGE #	1	2	CYCLONE	FILTER
FINAL WT (MG)	168523.20	165641.00	161378.90	1988.90
TARE WT (MG)	168403.20	165626.50	161367.90	1990.30
NET WT (MG) CORRECTED	120.00	14.50	11.00	0.00
FRACTION % OF TOTAL	82.47	9.97	7.56	0.00
CUM. % WITH FILTER	82.47	92.44	100.00	100.00
FRACTION % WITHOUT FILTER	82.47	9.97	7.56	
CUM. % WITHOUT FILTER	82.47	92.44	100.00	
JET VEL. (CM/SEC)	0	0	0	
D50 SIZE (MICRONS)	9.12	4.99	0.88	<0.88
DM/DLOGD (GRAINS/SCF)		0.01953	0.00517	
GEO MEAN (MICRONS)		6.74	2.10	<2.10
PARTICLE COUNT		3.58D+05	3.05D+05	

same as before

INPUT DATA FOR FILE HCS-16
TEST DATE - 4/2/93
PROJECT # - 9712-51-16
TEST SITE - DERAMUS FIELD STATION
RUN ID - HCSS RUN NO. 16

% WATER= 0.50
% CARBON DIOXIDE= 0.00
% CARBON MONOXIDE= 0.00
% OXYGEN= 20.90

ANDERSEN HCSS IMPACTOR

STACK TEMPERATURE= 39.0 DEGREES F.
BAR. PRESSURE= 29.00 INCHES HG
STATIC PRESSURE= -0.13 INCHES H20
AVE. DELTA P= 0.02 INCHES H20
PITOT COEFF.= .8339
METER TEMP.= 70.0 DEGREES F.
PROBE DIA.= 0.500 INCHES

SAMPLING TIME= 62.5 MIN.
PRESSURE DROP= 0.00 INCHES HG
SAMPLER TEMP. = 39.0 DEGREES F.
PARTICLE DENS= 1
METER VOL.= 45.858 CUBIC FEET
DELTA H= 1.94 INCHES H20

CALCULATED RESULTS

SAMPLE VOL.-DRY STD.= 44.480 CU. FT.
SAMPLE VOL.-WET STD.= 44.704 CU. FT.
STACK VELOCITY= 467.7 FT./MIN.
NOZZLE VELOCITY= 511.9 FT./MIN.
MASS COLLECTED= 177.287 MG.
LOADING= 0.06120 GRAIN/SCF
LOADING(DRY)= 0.06151 GRAIN/SCF

DRY MOLECULAR WT.= 28.84
WET MOLECULAR WT.= 28.78
% ISOKINETIC= 109.4
SAMPLING RATE-ACTUAL= 0.698 CU. FT/MIN
CYCLONE BLANK= 0.000 MG.
STAGE BLANK= 0.000 MG.
FILTER BLANK= 0.000 MG.

STAGE #	1	2	CYCLONE	FILTER
FINAL WT (MG)	168567.50	169276.70	168780.80	1648.50
TARE WT (MG)	168439.90	169258.50	168754.90	1642.90
NET WT (MG) CORRECTED	127.59	18.20	25.89	5.60
FRACTION % OF TOTAL	71.97	10.27	14.60	3.16
CUM. % WITH FILTER	71.97	82.24	96.84	100.00
FRACTION % WITHOUT FILTER	74.32	10.60	15.08	
CUM. % WITHOUT FILTER	74.32	84.92	100.00	
JET VEL. (CM/SEC)	0	0	0	
D50 SIZE (MICRONS)	9.04	4.93	0.86	<0.86
DM/DLOGD (GRAINS/SCF)		0.02383	0.01182	
GEO MEAN (MICRONS)		6.68	2.06	<2.06
PARTICLE COUNT		4.42D+05	7.09D+05	

INPUT DATA FOR FILE HCS-17
TEST DATE - 4/2/93
PROJECT # - 9712-51-16
TEST SITE - DERAMUS FIELD STATION
RUN ID - HCSS RUN NO 17

% WATER= 0.70
% CARBON DIOXIDE= 0.00
% CARBON MONOXIDE= 0.00
% OXYGEN= 20.90

ANDERSEN HCSS IMPACTOR

STACK TEMPERATURE= 47.0 DEGREES F.
BAR. PRESSURE= 29.02 INCHES HG
STATIC PRESSURE= -0.13 INCHES H20
AVE. DELTA P= 0.02 INCHES H20
PITOT COEFF.= .8159
METER TEMP.= 78.0 DEGREES F.
PROBE DIA.= 0.500 INCHES

SAMPLING TIME= 62.5 MIN.
PRESSURE DROP= 0.00 INCHES HG
SAMPLER TEMP. = 47.0 DEGREES F.
PARTICLE DENS= 1
METER VOL.= 41.496 CUBIC FEET
DELTA H= 1.40 INCHES H20

CALCULATED RESULTS

SAMPLE VOL.-DRY STD.= 39.624 CU. FT.
SAMPLE VOL.-WET STD.= 39.903 CU. FT.
STACK VELOCITY= 399.5 FT./MIN.
NOZZLE VELOCITY= 463.9 FT./MIN.
MASS COLLECTED= 89.397 MG.
LOADING= 0.03457 GRAIN/SCF
LOADING(DRY)= 0.03482 GRAIN/SCF

DRY MOLECULAR WT.= 28.84
WET MOLECULAR WT.= 28.76
% ISOKINETIC= 116.1
SAMPLING RATE-ACTUAL= 0.633 CU. FT/MIN
CYCLONE BLANK= 0.000 MG.
STAGE BLANK= 0.000 MG.
FILTER BLANK= 0.000 MG.

STAGE #	1	2	CYCLONE	FILTER
FINAL WT (MG)	165391.30	166893.00	166875.20	1661.00
TARE WT (MG)	165379.40	166823.10	166868.70	1659.90
NET WT (MG) CORRECTED	11.89	69.91	6.50	1.10
FRACTION % OF TOTAL	13.30	78.20	7.27	1.23
CUM. % WITH FILTER	13.30	91.50	98.77	100.00
FRACTION % WITHOUT FILTER	13.47	79.17	7.36	
CUM. % WITHOUT FILTER	13.47	92.64	100.00	
JET VEL. (CM/SEC)	0	0	0	
D50 SIZE (MICRONS)	9.42	5.21	0.98	<0.98
DM/DLOGD (GRAINS/SCF)		0.10497	0.00347	
GEO MEAN (MICRONS)		7.00	2.26	<2.26
PARTICLE COUNT		1.86D+06	1.90D+05	

INPUT DATA FOR FILE HCS-18
TEST DATE - 4/2/93
PROJECT # - 9712-51-16
TEST SITE - DERAMUS FIELD STATION
RUN ID - HCSS RUN NO. 18

% WATER= 0.50
% CARBON DIOXIDE= 0.00
% CARBON MONOXIDE= 0.00
% OXYGEN= 20.90

ANDERSEN HCSS IMPACTOR

STACK TEMPERATURE= 47.0 DEGREES F.
BAR. PRESSURE= 29.02 INCHES HG
STATIC PRESSURE= -0.13 INCHES H20
AVE. DELTA P= 0.01 INCHES H20
PITOT COEFF.= .8339
METER TEMP.= 81.0 DEGREES F.
PROBE DIA.= 0.500 INCHES

SAMPLING TIME= 62.5 MIN.
PRESSURE DROP= 0.00 INCHES HG
SAMPLER TEMP. = 47.0 DEGREES F.
PARTICLE DENS= 1
METER VOL.= 41.406 CUBIC FEET
DELTA H= 1.40 INCHES H20

CALCULATED RESULTS

SAMPLE VOL.-DRY STD.= 39.319 CU. FT.
SAMPLE VOL.-WET STD.= 39.516 CU. FT.
STACK VELOCITY= 365.1 FT./MIN.
NOZZLE VELOCITY= 459.4 FT./MIN.
MASS COLLECTED= 107.700 MG.
LOADING= 0.04206 GRAIN/SCF
LOADING(DRY)= 0.04227 GRAIN/SCF

DRY MOLECULAR WT.= 28.84
WET MOLECULAR WT.= 28.78
% ISOKINETIC= 125.8
SAMPLING RATE-ACTUAL= 0.626 CU. FT/MIN
CYCLONE BLANK= 0.000 MG.
STAGE BLANK= 0.000 MG.
FILTER BLANK= 0.000 MG.

STAGE #	1	2	CYCLONE	FILTER
FINAL WT (MG)	163365.00	164536.60	165768.70	1793.40
TARE WT (MG)	163292.90	164525.60	165756.80	1780.70
NET WT (MG) CORRECTED	72.09	11.00	11.91	12.70
FRACTION % OF TOTAL	66.94	10.21	11.06	11.79
CUM. % WITH FILTER	66.94	77.15	88.21	100.00
FRACTION % WITHOUT FILTER	75.89	11.58	12.53	
CUM. % WITHOUT FILTER	75.89	87.47	100.00	
JET VEL. (CM/SEC)	0	0	0	
D50 SIZE (MICRONS)	9.45	5.23	0.99	<0.99
DM/DLOGD (GRAINS/SCF)		0.01672	0.00644	
GEO MEAN (MICRONS)		7.03	2.28	<2.28
PARTICLE COUNT		2.94D+05	3.50D+05	

INPUT DATA FOR FILE HCS-19
TEST DATE - 4/5/93
PROJECT # - 9712-51-16
TEST SITE - DERAMUS FIELD STATION
RUN ID - HCSS RUN NO. 19

% WATER= 0.90
% CARBON DIOXIDE= 0.00
% CARBON MONOXIDE= 0.00
% OXYGEN= 20.90

ANDERSEN HCSS IMPACTOR

STACK TEMPERATURE=	43.0 DEGREES F.	SAMPLING TIME=	62.5 MIN.
BAR. PRESSURE=	29.80 INCHES HG	PRESSURE DROP=	0.00 INCHES HG
STATIC PRESSURE=	-0.13 INCHES H20	SAMPLER TEMP. =	43.0 DEGREES F.
AVE. DELTA P=	0.02 INCHES H20	PARTICLE DENS=	1
PITOT COEFF.=	.8159	METER VOL.=	42.851 CUBIC FEET
METER TEMP.=	75.0 DEGREES F.	DELTA H=	1.50 INCHES H20
PROBE DIA.=	0.500 INCHES		

CALCULATED RESULTS

SAMPLE VOL.-DRY STD.=	42.260 CU. FT.	DRY MOLECULAR WT.=	28.84
SAMPLE VOL.-WET STD.=	42.643 CU. FT.	WET MOLECULAR WT.=	28.74
STACK VELOCITY=	496.9 FT./MIN.	% ISOKINETIC=	96.4
NOZZLE VELOCITY=	479.0 FT./MIN.	SAMPLING RATE-ACTUAL=	0.653 CU. FT/MIN
MASS COLLECTED=	156.813 MG.	CYCLONE BLANK=	0.000 MG.
LOADING=	0.05675 GRAIN/SCF	STAGE BLANK=	0.000 MG.
LOADING(DRY)=	0.05726 GRAIN/SCF	FILTER BLANK=	0.000 MG.

STAGE #	1	2	CYCLONE	FILTER
FINAL WT (MG)	174378.90	164643.40	164400.00	1897.40
TARE WT (MG)	174253.50	164628.20	164385.30	1895.90
NET WT (MG) CORRECTED	125.41	15.20	14.70	1.50
FRACTION % OF TOTAL	79.97	9.70	9.38	0.96
CUM. % WITH FILTER	79.97	89.67	99.04	100.00
FRACTION % WITHOUT FILTER	80.74	9.79	9.47	
CUM. % WITHOUT FILTER	80.74	90.53	100.00	
JET VEL. (CM/SEC)	0	0	0	
D50 SIZE (MICRONS)	9.29	5.11	0.94	<0.94
DM/DLOGD (GRAINS/SCF)		0.02121	0.00723	
GEO MEAN (MICRONS)		6.89	2.19	<2.19
PARTICLE COUNT		3.81D+05	4.08D+05	

INPUT DATA FOR FILE HCS-20
TEST DATE - 4/5/93
PROJECT # - 9712-51-16
TEST SITE - DERAMUS FIELD STATION
RUN ID - HCSS RUN NO. 20

% WATER= 0.50
% CARBON DIOXIDE= 0.00
% CARBON MONOXIDE= 0.00
% OXYGEN= 20.90

ANDERSEN HCSS IMPACTOR

STACK TEMPERATURE=	46.0 DEGREES F.	SAMPLING TIME=	62.5 MIN.
BAR. PRESSURE=	29.80 INCHES HG	PRESSURE DROP=	0.00 INCHES HG
STATIC PRESSURE=	-0.13 INCHES H20	SAMPLER TEMP. =	46.0 DEGREES F.
AVE. DELTA P=	0.02 INCHES H20	PARTICLE DENS=	1
PITOT COEFF.=	.8339	METER VOL.=	43.416 CUBIC FEET
METER TEMP.=	80.0 DEGREES F.	DELTA H=	1.50 INCHES H20
PROBE DIA.=	0.500 INCHES		

CALCULATED RESULTS

SAMPLE VOL.-DRY STD.=	42.420 CU. FT.	DRY MOLECULAR WT.=	28.84
SAMPLE VOL.-WET STD.=	42.634 CU. FT.	WET MOLECULAR WT.=	28.78
STACK VELOCITY=	476.1 FT./MIN.	% ISOKINETIC=	101.2
NOZZLE VELOCITY=	481.7 FT./MIN.	SAMPLING RATE-ACTUAL=	0.657 CU. FT/MIN
MASS COLLECTED=	145.203 MG.	CYCLONE BLANK=	0.000 MG.
LOADING=	0.05256 GRAIN/SCF	STAGE BLANK=	0.000 MG.
LOADING(DRY)=	0.05282 GRAIN/SCF	FILTER BLANK=	0.000 MG.

STAGE #	1	2	CYCLONE	FILTER
FINAL WT (MG)	161886.40	165461.10	165831.20	1956.80
TARE WT (MG)	161783.30	165446.30	165814.40	1946.30
NET WT (MG) CORRECTED	103.11	14.80	16.80	10.50
FRACTION % OF TOTAL	71.01	10.19	11.57	7.23
CUM. % WITH FILTER	71.01	81.20	92.77	100.00
FRACTION % WITHOUT FILTER	76.55	10.98	12.47	
CUM. % WITHOUT FILTER	76.55	87.53	100.00	
JET VEL. (CM/SEC)	0	0	0	
D50 SIZE (MICRONS)	9.29	5.11	0.94	<0.94
DM/DLOGD (GRAINS/SCF)		0.02062	0.00828	
GEO MEAN (MICRONS)		6.89	2.19	<2.19
PARTICLE COUNT		3.71D+05	4.67D+05	

INPUT DATA FOR FILE HCS-21
TEST DATE - 4/5/93
PROJECT # - 9712-51-16
TEST SITE - DERAMUS FIELD STATION
RUN ID - HCSS RUN NO. 21

% WATER= 1.10
% CARBON DIOXIDE= 0.00
% CARBON MONOXIDE= 0.00
% OXYGEN= 20.90

ANDERSEN HCSS IMPACTOR

STACK TEMPERATURE=	51.0 DEGREES F.	SAMPLING TIME=	62.5 MIN.
BAR. PRESSURE=	29.30 INCHES HG	PRESSURE DROP=	0.00 INCHES HG
STATIC PRESSURE=	-1.20 INCHES H20	SAMPLER TEMP. =	51.0 DEGREES F.
AVE. DELTA P=	0.18 INCHES H20	PARTICLE DENS=	1
PITOT COEFF.=	.8159	METER VOL.=	35.925 CUBIC FEET
METER TEMP.=	76.0 DEGREES F.	DELTA H=	1.00 INCHES H20
PROBE DIA.=	0.249 INCHES		

CALCULATED RESULTS

SAMPLE VOL.-DRY STD.=	34.729 CU. FT.	DRY MOLECULAR WT.=	28.84
SAMPLE VOL.-WET STD.=	35.115 CU. FT.	WET MOLECULAR WT.=	28.72
STACK VELOCITY=	1393.3 FT./MIN.	% ISOKINETIC=	118.2
NOZZLE VELOCITY=	1647.6 FT./MIN.	SAMPLING RATE-ACTUAL=	0.557 CU. FT/MIN
MASS COLLECTED=	144.287 MG.	CYCLONE BLANK=	0.000 MG.
LOADING=	0.06341 GRAIN/SCF	STAGE BLANK=	0.000 MG.
LOADING(DRY)=	0.06412 GRAIN/SCF	FILTER BLANK=	0.000 MG.

STAGE #	1	2	CYCLONE	FILTER
FINAL WT (MG)	165377.00	165386.80	162130.60	1658.90
TARE WT (MG)	165248.00	165378.20	162124.50	1658.30
NET WT (MG) CORRECTED	129.00	8.59	6.09	0.60
FRACTION % OF TOTAL	89.40	5.96	4.22	0.42
CUM. % WITH FILTER	89.40	95.36	99.58	100.00
FRACTION % WITHOUT FILTER	89.78	5.98	4.24	
CUM. % WITHOUT FILTER	89.78	95.76	100.00	
JET VEL. (CM/SEC)	0	0	0	
D50 SIZE (MICRONS)	9.90	5.57	1.13	<1.13
DM/DLOGD (GRAINS/SCF)		0.01510	0.00387	
GEO MEAN (MICRONS)		7.42	2.51	<2.51
PARTICLE COUNT		2.52D+05	1.91D+05	

INPUT DATA FOR FILE HCS-22
TEST DATE - 4/5/93
PROJECT # - 9712-51-16
TEST SITE - DERAMUS FIELD STATION
RUN ID - HCSS RUN NO. 22

% WATER= 0.80
% CARBON DIOXIDE= 0.00
% CARBON MONOXIDE= 0.00
% OXYGEN= 20.90

ANDERSEN HCSS IMPACTOR

STACK TEMPERATURE=	53.0 DEGREES F.	SAMPLING TIME=	62.5 MIN.
BAR. PRESSURE=	29.30 INCHES HG	PRESSURE DROP=	0.00 INCHES HG
STATIC PRESSURE=	-1.20 INCHES H20	SAMPLER TEMP. =	53.0 DEGREES F.
AVE. DELTA P=	0.19 INCHES H20	PARTICLE DENS=	1
PITOT COEFF.=	.83	METER VOL.=	35.443 CUBIC FEET
METER TEMP.=	78.0 DEGREES F.	DELTA H=	1.00 INCHES H20
PROBE DIA.=	0.249 INCHES		

CALCULATED RESULTS

SAMPLE VOL.-DRY STD.=	34.135 CU. FT.	DRY MOLECULAR WT.=	28.84
SAMPLE VOL.-WET STD.=	34.411 CU. FT.	WET MOLECULAR WT.=	28.75
STACK VELOCITY=	1434.9 FT./MIN.	% ISOKINETIC=	113.0
NOZZLE VELOCITY=	1620.9 FT./MIN.	SAMPLING RATE-ACTUAL=	0.548 CU. FT/MIN
MASS COLLECTED=	325.303 MG.	CYCLONE BLANK=	0.000 MG.
LOADING=	0.14589 GRAIN/SCF	STAGE BLANK=	0.000 MG.
LOADING(DRY)=	0.14707 GRAIN/SCF	FILTER BLANK=	0.000 MG.

STAGE #	1	2	CYCLONE	FILTER
FINAL WT (MG)	167239.70	164766.00	167284.00	1620.30
TARE WT (MG)	166946.00	164752.50	167267.50	1618.70
NET WT (MG) CORRECTED	293.70	13.50	16.50	1.60
FRACTION % OF TOTAL	90.29	4.15	5.07	0.49
CUM. % WITH FILTER	90.29	94.44	99.51	100.00
FRACTION % WITHOUT FILTER	90.73	4.17	5.10	
CUM. % WITHOUT FILTER	90.73	94.90	100.00	
JET VEL. (CM/SEC)	0	0	0	
D50 SIZE (MICRONS)	9.98	5.62	1.15	<1.15
DM/DLOGD (GRAINS/SCF)		0.02429	0.01076	
GEO MEAN (MICRONS)		7.49	2.55	<2.55
PARTICLE COUNT		4.01D+05	5.23D+05	

INPUT DATA FOR FILE HCS-23

TEST DATE - 4/6/93		% WATER=	0.70
PROJECT # - 9712-51-16		% CARBON DIOXIDE=	0.00
TEST SITE - DERAMUS FIELD STATION		% CARBON MONOXIDE=	0.00
RUN ID - HCSS RUN NO. 23		% OXYGEN=	20.90

ANDERSEN HCSS IMPACTOR

STACK TEMPERATURE=	41.0 DEGREES F.	SAMPLING TIME=	62.5 MIN.
BAR. PRESSURE=	29.80 INCHES HG	PRESSURE DROP=	0.00 INCHES HG
STATIC PRESSURE=	-1.20 INCHES H20	SAMPLER TEMP. =	41.0 DEGREES F.
AVE. DELTA P=	0.17 INCHES H20	PARTICLE DENS=	1
PITOT COEFF.=	.8159	METER VOL.=	35.421 CUBIC FEET
METER TEMP.=	60.0 DEGREES F.	DELTA H=	1.00 INCHES H20
PROBE DIA.=	0.249 INCHES		

CALCULATED RESULTS

SAMPLE VOL.-DRY STD.=	35.896 CU. FT.	DRY MOLECULAR WT.=	28.84
SAMPLE VOL.-WET STD.=	36.149 CU. FT.	WET MOLECULAR WT.=	28.76
STACK VELOCITY=	1301.5 FT./MIN.	% ISOKINETIC=	125.6
NOZZLE VELOCITY=	1634.9 FT./MIN.	SAMPLING RATE-ACTUAL=	0.553 CU. FT/MIN
MASS COLLECTED=	181.984 MG.	CYCLONE BLANK=	0.000 MG.
LOADING=	0.07769 GRAIN/SCF	STAGE BLANK=	0.000 MG.
LOADING(DRY)=	0.07824 GRAIN/SCF	FILTER BLANK=	0.000 MG.

STAGE #	1	2	CYCLONE	FILTER
FINAL WT (MG)	160285.80	160943.10	169311.80	1716.50
TARE WT (MG)	160110.90	160937.00	169311.30	1716.00
NET WT (MG) CORRECTED	174.89	6.09	0.50	0.50
FRACTION % OF TOTAL	96.10	3.35	0.27	0.27
CUM. % WITH FILTER	96.10	99.45	99.73	100.00
FRACTION % WITHOUT FILTER	96.37	3.36	0.28	
CUM. % WITHOUT FILTER	96.37	99.72	100.00	
JET VEL. (CM/SEC)	0	0	0	
D50 SIZE (MICRONS)	9.87	5.55	1.11	<1.11
DM/DLOGD (GRAINS/SCF)		0.01042	0.00031	
GEO MEAN (MICRONS)		7.40	2.48	<2.48
PARTICLE COUNT		1.74D+05	1.52D+04	

INPUT DATA FOR FILE HCS-24
TEST DATE - 4/6/93
PROJECT # - 9712-51-16
TEST SITE - DERAMUS FIELD STATION
RUN ID - HCSS RUN NO. 24

% WATER= 0.70
% CARBON DIOXIDE= 0.00
% CARBON MONOXIDE= 0.00
% OXYGEN= 20.90

ANDERSEN HCSS IMPACTOR

STACK TEMPERATURE=	43.0 DEGREES F.	SAMPLING TIME=	62.5 MIN.
BAR. PRESSURE=	29.80 INCHES HG	PRESSURE DROP=	0.00 INCHES HG
STATIC PRESSURE=	-1.20 INCHES H20	SAMPLER TEMP. =	43.0 DEGREES F.
AVE. DELTA P=	0.20 INCHES H20	PARTICLE DENS=	1
PITOT COEFF.=	.8339	METER VOL.=	35.354 CUBIC FEET
METER TEMP.=	64.0 DEGREES F.	DELTA H=	1.00 INCHES H20
PROBE DIA.=	0.249 INCHES		

CALCULATED RESULTS

SAMPLE VOL.-DRY STD.=	35.554 CU. FT.	DRY MOLECULAR WT.=	28.84
SAMPLE VOL.-WET STD.=	35.805 CU. FT.	WET MOLECULAR WT.=	28.76
STACK VELOCITY=	1456.4 FT./MIN.	% ISOKINETIC=	111.6
NOZZLE VELOCITY=	1625.8 FT./MIN.	SAMPLING RATE-ACTUAL=	0.550 CU. FT/MIN
MASS COLLECTED=	248.487 MG.	CYCLONE BLANK=	0.000 MG.
LOADING=	0.10710 GRAIN/SCF	STAGE BLANK=	0.000 MG.
LOADING(DRY)=	0.10786 GRAIN/SCF	FILTER BLANK=	0.000 MG.

STAGE #	1	2	CYCLONE	FILTER
FINAL WT (MG)	167202.80	158079.30	166796.10	1956.60
TARE WT (MG)	166970.20	158073.80	166789.00	1953.30
NET WT (MG) CORRECTED	232.59	5.50	7.09	3.30
FRACTION % OF TOTAL	93.60	2.21	2.85	1.33
CUM. % WITH FILTER	93.60	95.82	98.67	100.00
FRACTION % WITHOUT FILTER	94.86	2.24	2.89	
CUM. % WITHOUT FILTER	94.86	97.11	100.00	
JET VEL. (CM/SEC)	0	0	0	
D50 SIZE (MICRONS)	9.90	5.58	1.12	<1.12
DM/DLOGD (GRAINS/SCF)		0.00951	0.00439	
GEO MEAN (MICRONS)		7.43	2.50	<2.50
PARTICLE COUNT		1.58D+05	2.17D+05	

INPUT DATA FOR FILE HCS-25

TEST DATE - 4/6/93		% WATER=	1.00
PROJECT # - 9712-51-16		% CARBON DIOXIDE=	0.00
TEST SITE - DERAMUS FIELD STATION		% CARBON MONOXIDE=	0.00
RUN ID - HCSS RUN NO. 25		% OXYGEN=	20.90

ANDERSEN HCSS IMPACTOR

STACK TEMPERATURE=	54.0 DEGREES F.	SAMPLING TIME=	62.5 MIN.
BAR. PRESSURE=	29.60 INCHES HG	PRESSURE DROP=	0.00 INCHES HG
STATIC PRESSURE=	-1.20 INCHES H20	SAMPLER TEMP. =	54.0 DEGREES F.
AVE. DELTA P=	0.15 INCHES H20	PARTICLE DENS=	1
PITOT COEFF.=	.8159	METER VOL.=	35.711 CUBIC FEET
METER TEMP.=	78.0 DEGREES F.	DELTA H=	1.00 INCHES H20
PROBE DIA.=	0.249 INCHES		

CALCULATED RESULTS

SAMPLE VOL.-DRY STD.=	34.745 CU. FT.	DRY MOLECULAR WT.=	28.84
SAMPLE VOL.-WET STD.=	35.096 CU. FT.	WET MOLECULAR WT.=	28.73
STACK VELOCITY=	1270.3 FT./MIN.	% ISOKINETIC=	129.1
NOZZLE VELOCITY=	1639.5 FT./MIN.	SAMPLING RATE-ACTUAL=	0.554 CU. FT/MIN
MASS COLLECTED=	176.497 MG.	CYCLONE BLANK=	0.000 MG.
LOADING=	0.07761 GRAIN/SCF	STAGE BLANK=	0.000 MG.
LOADING(DRY)=	0.07839 GRAIN/SCF	FILTER BLANK=	0.000 MG.

STAGE #	1	2	CYCLONE	FILTER
FINAL WT (MG)	160073.80	174480.70	167394.80	1578.90
TARE WT (MG)	159902.20	174477.00	167393.80	1578.70
NET WT (MG) CORRECTED	171.59	3.70	1.00	0.20
FRACTION % OF TOTAL	97.22	2.10	0.57	0.11
CUM. % WITH FILTER	97.22	99.32	99.89	100.00
FRACTION % WITHOUT FILTER	97.33	2.10	0.57	
CUM. % WITHOUT FILTER	97.33	99.43	100.00	
JET VEL. (CM/SEC)	0	0	0	
D50 SIZE (MICRONS)	9.94	5.59	1.14	<1.14
DM/DLOGD (GRAINS/SCF)		0.00652	0.00064	
GEO MEAN (MICRONS)		7.45	2.53	<2.53
PARTICLE COUNT		1.08D+05	3.12D+04	

INPUT DATA FOR FILE HCS-26

TEST DATE - 4/6/93		% WATER=	0.70
PROJECT # - 9712-51-16		% CARBON DIOXIDE=	0.00
TEST SITE - DERAMUS FIELD STATION		% CARBON MONOXIDE=	0.00
RUN ID - HCSS RUN NO. 26		% OXYGEN=	20.90

ANDERSEN HCSS IMPACTOR

STACK TEMPERATURE=	55.0 DEGREES F.	SAMPLING TIME=	62.5 MIN.
BAR. PRESSURE=	29.60 INCHES HG	PRESSURE DROP=	0.00 INCHES HG
STATIC PRESSURE=	-1.20 INCHES H20	SAMPLER TEMP. =	55.0 DEGREES F.
AVE. DELTA P=	0.18 INCHES H20	PARTICLE DENS=	1
PITOT COEFF.=	.8339	METER VOL.=	36.032 CUBIC FEET
METER TEMP.=	81.0 DEGREES F.	DELTA H=	1.00 INCHES H20
PROBE DIA.=	0.249 INCHES		

CALCULATED RESULTS

SAMPLE VOL.-DRY STD.=	34.863 CU. FT.	DRY MOLECULAR WT.=	28.84
SAMPLE VOL.-WET STD.=	35.108 CU. FT.	WET MOLECULAR WT.=	28.76
STACK VELOCITY=	1413.4 FT./MIN.	% ISOKINETIC=	116.3
NOZZLE VELOCITY=	1643.3 FT./MIN.	SAMPLING RATE-ACTUAL=	0.556 CU. FT/MIN
MASS COLLECTED=	235.516 MG.	CYCLONE BLANK=	0.000 MG.
LOADING=	0.10352 GRAIN/SCF	STAGE BLANK=	0.000 MG.
LOADING(DRY)=	0.10425 GRAIN/SCF	FILTER BLANK=	0.000 MG.

STAGE #	1	2	CYCLONE	FILTER
FINAL WT (MG)	159169.80	161287.20	168610.40	1845.30
TARE WT (MG)	158944.30	161279.10	168608.50	1848.30
NET WT (MG) CORRECTED	225.50	8.11	1.91	0.00
FRACTION % OF TOTAL	95.75	3.44	0.81	0.00
CUM. % WITH FILTER	95.75	99.19	100.00	100.00
FRACTION % WITHOUT FILTER	95.75	3.44	0.81	
CUM. % WITHOUT FILTER	95.75	99.19	100.00	
JET VEL. (CM/SEC)	0	0	0	
D50 SIZE (MICRONS)	9.94	5.59	1.14	<1.14
DM/DLOGD (GRAINS/SCF)		0.01426	0.00122	
GEO MEAN (MICRONS)		7.45	2.53	<2.53
PARTICLE COUNT		2.37D+05	5.95D+04	

APPENDIX D

FACILITY OPERATING DATA

EPA/AQMD WIND TUNNEL—BLASTING OPERATIONS DATA

MRI Project No. 9712-51

Date 3/23/93
Run 1 + 2
Start Time 1300

Wind Speed, mph 15
Parts None
Blasting Operator S. Poandl
Wind Tunnel Operator G. Cooper

Fan Measurements	Left	Right
Speed, RPM	794	784
Current, Amps	52	52
Voltage, Volts	208	208

Temp 40
RH 75
Bar 28.98

Wind Tunnel Static Pressure, in. w.c.	Initial	Port 1	Port 2	Port 3	Port 4	Port 5	____
South location							
North location							

Sand Blaster Measurements, lbs

	Initial	Port 1	Port 2	Port 3	Port 4	Port 5	Total
Sand charge	251	149	100	100	100		700
Wind tunnel	67.5						67.5
Blasting pot	9.5						9.5
Total							700 − 9.5 = 690.5
Blaster operating time, minutes							~ 70

Net sand used, lbs/min ~ 10

Compressor Measurements

	Initial	Port 1	Port 2	Port 3	Port 4	Port 5	Final
Idle pressure, psi							
Run pressure, psi							
Engine hrs							
Engine speed, rpm							
Cartridge pressure, psi							
Cartridge check							

EPA/AQMD WIND TUNNEL—BLASTING OPERATIONS DATA Reduction

MRI Project No. 9712-51

Date 3/23/93
Run 1+2
Start Time 1300

Wind Speed, mph 15
Parts None
Blasting Operator Powell
Wind Tunnel Operator Cooper

Fan Measurements	Left	Right
Speed, RPM	794	784
Current, Amps	52	52
Voltage, Volts	208	208

Temp 40 °F
% RH 75
Bar 28.98 IN Hg

Wind Tunnel Static Pressure, in. w.c.

South location ____

North location ____

Sand Blaster Measurements

	Total
Sand charge (Lbs)	700
Recovered From Pot	9.5
Net Sand Used	690.5
Blaster operating time, minutes	~70
Net sand used, lbs/min	~10
Area Cleaned (sq ft)	NA
Sand used (lbs/ft²)	NA
Cleaning Rate (sq ft/min)	NA

Sand Recovered From Tunnel

Total	67.5
%	9.8

EPA/AQMD WIND TUNNEL—BLASTING OPERATIONS DATA

MRI Project No. 9712-51

Date 3/24/93
Run 3 + 4
Start Time

Wind Speed, mph 5
Parts None
Blasting Operator S. Pound
Wind Tunnel Operator G. Cooper

Fan Measurements	Left	Right
Speed, RPM	260	256
Current, Amps	17	17
Voltage, Volts	205	205

Temp 42
% RH 80
Bar 28.94

Wind Tunnel Static Pressure, in. w.c.	Initial	Port 1	Port 2	Port 3	Port 4	Port 5	
South location							
North location							

Sand Blaster Measurements, lbs

	Initial	Port 1	Port 2	Port 3	Port 4	Port 5	Total
Sand charge	200	100	100	100	200		700
Wind tunnel	129	188	160	144	42		663
Blasting pot	27						27
Total							700 -27 673
Blaster operating time, minutes							~70

Net sand used, lbs/min ~9.5

Compressor Measurements

	Initial	Port 1	Port 2	Port 3	Port 4	Port 5	Final
Idle pressure, psi							
Run pressure, psi							
Engine hrs							
Engine speed, rpm							
Cartridge pressure, psi							
Cartridge check							

EPA/AQMD WIND TUNNEL—BLASTING OPERATIONS DATA

MRI Project No. 9712-51

Date 3/24/93
Run 3+4
Start Time _____

Wind Speed, mph 5
Parts None
Blasting Operator Pound
Wind Tunnel Operator Cooper

Fan Measurements	Left	Right
Speed, RPM	260	256
Current, Amps	17	17
Voltage, Volts	205	205

Temp 42 °F
% RH 80
Bar 28.94 IN Hg

Wind Tunnel Static Pressure, in. w.c.

South location ____

North location ____

Sand Blaster Measurements

	Total
Sand charge (Lbs)	700
Recovered From Pot	27
Net Sand Used	673
Blaster operating time, minutes	~70
Net sand used, lbs/min	~9.5
Area Cleaned (sq ft)	NA
Sand used (lbs/ft²)	NA
Cleaning Rate (sq ft/min)	NA

Sand Recovered From Tunnel

Total	663
%	98.5

EPA/AQMD WIND TUNNEL—BLASTING OPERATIONS DATA

MRI Project No. 9712-51

Date 3/25/93
Run 5 + 6
Start Time

Wind Speed, mph 10
Parts None
Blasting Operator S. Poandc
Wind Tunnel Operator G - Cooper

Fan Measurements	Left	Right
Speed, RPM	499	498
Current, Amps	20.5	21
Voltage, Volts	203	205

Temp 45
% RH 65
Bar 29.05

Wind Tunnel Static Pressure, in. w.c.	Initial	Port 1	Port 2	Port 3	Port 4	Port 5	
South location							0.50-0.55
North location							0.35

Sand Blaster Measurements, lbs

	Initial	Port 1	Port 2	Port 3	Port 4	Port 5	Total
Sand charge	200	200	100	150	115		765
Wind tunnel	151	199	96	159			605
Blasting pot	29						29
Total							765 - 29 = 736
Blaster operating time, minutes							~70

Net sand used, lbs/min ~10.5

Compressor Measurements

	Initial	Port 1	Port 2	Port 3	Port 4	Port 5	Final
Idle pressure, psi	100						
Run pressure, psi	97						
Engine hrs	1218.6					1220.0	1.4
Engine speed, rpm							
Cartridge pressure, psi	96						
Cartridge check							

EPA/AQMD WIND TUNNEL—BLASTING OPERATIONS DATA

MRI Project No. 9712-51

Date 3/25/93
Run 5+6
Start Time

Wind Speed, mph 10
Parts None
Blasting Operator Powell
Wind Tunnel Operator Cooper

Fan Measurements	Left	Right
Speed, RPM	499	498
Current, Amps	20.5	21
Voltage, Volts	203	205

Temp 45 °F
% RH 65
Bar 29.05 IN Hg

Wind Tunnel Static Pressure, in. w.c.

South location 0.50 — 0.55

North location 0.35

Sand Blaster Measurements

	Total
Sand charge (Lbs)	765
Recovered From Pot	29
Net Sand Used	736

Sand Recovered From Tunnel

Total 605

% 82.2

Blaster operating time, minutes ~70

Net sand used, lbs/min ~10.5

Area Cleaned (sq ft) NA

Sand used (lbs/ft²) NA

Cleaning Rate (sq ft/min) NA

EPA/AQMD WIND TUNNEL—BLASTING OPERATIONS DATA

MRI Project No. 9712-51

Date 3/29/93
Run 7 + 8
Start Time 1030

Wind Speed, mph 10
Parts Painted car hoods
Blasting Operator Poandl
Wind Tunnel Operator Cooper

Fan Measurements	Left	Right
Speed, RPM		
Current, Amps	20	21
Voltage, Volts	205	206

Temp 68
% RH 72
Bar 28.68

Wind Tunnel Static Pressure, in. w.c.	Initial	Port 1	Port 2	Port 3	Port 4	Port 5	
South location	.55	.50	.50	.5	.45		
North location	.31	.30	.3	.3	.28		

Sand Blaster Measurements, lbs ~~At End of~~

	Initial	Port 1	Port 2	Port 3	Port 4	Port 5	Total
Sand charge	200		200	100	100	149	749
Wind tunnel	11	243	174	186			614
Blasting pot	77						749
Total							-77
							672
Blaster operating time, minutes	0900	0913.5	0927	0940	0952.5	1005.5	65.5

Net sand used, lbs/min 10.3 lbs/ft² = 3.8

Compressor Measurements ~~During Run~~ 2.7 ft²/min

	Initial	Port 1	Port 2	Port 3	Port 4	Port 5	Final
Idle pressure, psi	100		100		99	99	
Run pressure, psi	97	97	97	98	97		
Engine hrs	1221.9	22.2	22.2	22.5	22.8	23.1	23.5 = 1.6 h
Engine speed, rpm	3450	3400	3400	3400	3400		
Cartridge pressure, psi	100		95	95	94		
Cartridge check	✓				✓	✓	
Sq ft		26.5/16/42.5	26.5/12/38.5	31	27	38	177 ft²
Nozzle Position			✓	✓	✓		

~~MRI~~
~~Press O film~~
~~RH Gage~~
~~Circle Saw~~
~~Torch~~

62 x 58 + 6 ft²

EPA/AQMD WIND TUNNEL—BLASTING OPERATIONS DATA

MRI Project No. 9712-51

Date 3/29/93
Run 7+8
Start Time 1030

Wind Speed, mph 10
Parts Painted car hoods
Blasting Operator Poandl
Wind Tunnel Operator Cooper

Fan Measurements	Left	Right
Speed, RPM	ND	ND
Current, Amps	20	21
Voltage, Volts	205	206

Temp	68	°F
% RH	72	
Bar	28.68	IN Hg

Wind Tunnel Static Pressure, in. w.c.

South location 0.45 - 0.55

North location 0.28 - 0.31

Sand Blaster Measurements

	Total
Sand charge (Lbs)	749
Recovered From Pot	77
Net Sand Used	672
Blaster operating time, minutes	65.5
Net sand used, lbs/min	10.3
Area Cleaned (sq ft)	177
Sand used (lbs/ft²)	3.8
Cleaning Rate (sq ft/min)	2.7

Sand Recovered From Tunnel

Total	614
%	91.4

EPA/AQMD WIND TUNNEL—BLASTING OPERATIONS DATA

MRI Project No. 9712-51

Date 3/29/93
Run 9 + 10
Start Time 1450

Wind Speed, mph 10
Parts Clean car hoods
Blasting Operator Powell
Wind Tunnel Operator Cooper

Fan Measurements	Left	Right
Speed, RPM		
Current, Amps	20	20.5
Voltage, Volts	206	209

Temp 68
% RH 72
Bar 28.68

Wind Tunnel Static Pressure, in. w.c.	Initial	Port 1	Port 2	Port 3	Port 4	Port 5	
South location	.52	.45	.45	.45	.37	.42	
North location	.29	.29	.28	.28	.30	.28	

Sand Blaster Measurements, lbs

	Initial	Port 1	Port 2	Port 3	Port 4	Port 5	Total
Sand charge	49 77/97/223	150	100	150	100		723
Wind tunnel	19	200	215	144			8
Blasting pot	66						723 − 66 = 657
Total							
Blaster operating time, minutes	1000	1014	1027	1040	1053	1106.5	66.5
Net sand used, lbs/min	9.9		lbs / ft² = NA ft² / min = NA				

Compressor Measurements

	Initial	Port 1	Port 2	Port 3	Port 4	Port 5	Final
Idle pressure, psi	100	100	100	100	100	100	
Run pressure, psi		97		96	97	90	
Engine hrs	1223.5	24.0	24.4	24.7	25.0	25.3 =	1.8 hr
Engine speed, rpm idle	2250	3400	1900	2250 3400	3400	2250 3400	
Cartridge pressure, psi	98	94		90	94	86	
Cartridge check	✓		✓	✓	✓	✓	
Nozzle position	✓	✓	✓	✓	✓	✓	

EPA/AQMD WIND TUNNEL—BLASTING OPERATIONS DATA

MRI Project No. 9712-51

Date 3/29/93
Run 9 + 10
Start Time 1450

Wind Speed, mph 10
Parts Clean car hoods
Blasting Operator Poandl
Wind Tunnel Operator Cooper

Fan Measurements	Left	Right
Speed, RPM	ND	ND
Current, Amps	20	20.5
Voltage, Volts	206	209

Temp 68 °F
% RH 72
Bar 28.68 IN Hg

Wind Tunnel Static Pressure, in. w.c.

South location 0.37 - 0.52

North location 0.28 - 0.30

Sand Blaster Measurements

	Total
Sand charge (Lbs)	723
Recovered From Pot	66
Net Sand Used	657
Blaster operating time, minutes	66.5
Net sand used, lbs/min	9.9
Area Cleaned (sq ft)	NA
Sand used (lbs/ft²)	NA
Cleaning Rate (sq ft/min)	NA

Sand Recovered From Tunnel

Total 578

% 88.0

EPA/AQMD WIND TUNNEL—BLASTING OPERATIONS DATA

MRI Project No. 9712-51

Date 3/30/93
Run 11/12
Start Time 0952
End Time 1123

Wind Speed, mph 10
Parts Oxidized Steel Tank
Blasting Operator Poandl
Wind Tunnel Operator Cooper

Fan Measurements	Left	Right
Speed, RPM	ND	ND
Current, Amps	20	20.5
Voltage, Volts	204	206

• 210 VOLTS WITH FANS OFF

Temp 67 °F
RH 73 - 67 %
Barometer 28.47 in Hg
Other ____

Wind Tunnel Static Pressure, in. w.c.	Initial	Port 1	Port 2	Port 3	Port 4	Port 5	Total
South location	0.55	____	0.52	.54	.51	.50	____
North location	0.31	____	0.30	.32	.30	.30	____

Sand Blaster Measurements, lbs Sand Condition ____

	Initial	Port 1	Port 2	Port 3	Port 4	Port 5	Total
Sand charge	209	150	100	100	100	____	659
Wind tunnel	14	271	145	183	____	____	613
Blasting pot	30	____	____	____	____	____	659 - 30
Total							629
Blaster operating time, minutes	1100	1113.5	1126	1139	1152.5	1205.5	65.5
Net sand used, lbs/min	9.6						

9.1 lbf/ft²
1.1 ft³/min

Compressor Measurements

	Initial	Port 1	Port 2	Port 3	Port 4	Port 5	Final
Idle pressure, psi	100	____	100	100	99	100	____
Run pressure, psi	92	92	92	91	92	92	____
Engine hrs	1225.5	25.9	26.2	26.5	26.8	27.1	1.6
Engine speed, rpm	____	3450	3450	____	3400	3450	____
Cartridge pressure, psi	____	92	93	92	94	____	____
Cartridge check	✓	✓	✓	✓	✓	✓	____
Nozzle position	✓	✓	✓	✓	✓	✓	____
Area Cleaned (ft²)	____	10.7	14.4	16.5	9.0	18.2	68.8

EPA/AQMD WIND TUNNEL—BLASTING OPERATIONS DATA

MRI Project No. 9712-51

Date 3/30/93
Run 11 + 12
Start Time 0952

Wind Speed, mph 10
Parts Rusted Steel Tank
Blasting Operator Poandl
Wind Tunnel Operator Cooper

Fan Measurements	Left	Right
Speed, RPM	ND	ND
Current, Amps	20	20.5
Voltage, Volts	204	206

Temp 67 °F
% RH 67
Bar 28.47 IN Hg

Wind Tunnel Static Pressure, in. w.c.

South location 0.50 - 0.55
North location 0.30 - 0.32

Sand Blaster Measurements

	Total
Sand charge (Lbs)	659
Recovered From Pot	30
Net Sand Used	629
Blaster operating time, minutes	65.5
Net sand used, lbs/min	9.6
Area Cleaned (sq ft)	68.8
Sand used (lbs/ft²)	9.1
Cleaning Rate (sq ft/min)	1.1

Sand Recovered From Tunnel

Total	613
%	97.5

EPA/AQMD WIND TUNNEL—BLASTING OPERATIONS DATA

MRI Project No. 9712-51

VOIDED DUE TO RAIN

Date 3/[illegible]/93
Run 13 + 14
Start Time _____

Wind Speed, mph 15
Parts Painted Car Hoods
Blasting Operator P[illegible]
Wind Tunnel Operator C[illegible]

Fan Measurements	Left	Right
Speed, RPM	634	798
Current, Amps	37.[illegible]	57
Voltage, Volts	199	200

Temp 67
% RH 67
Bar 28.47

Shut down due to rain

Wind Tunnel Static Pressure, in. w.c.	Initial	Port 1	Port 2	Port 3	Port 4	Port 5	
South location		1.0	disconnected				
North location		.68	.71	.73	.74	.74	

Sand Blaster Measurements, lbs

	Initial	Port 1	Port 2	Port 3	Port 4	Port 5	Total
Sand charge	230	~~100~~	100	70	130		730
Wind tunnel	10	215	39			= 264	
Blasting pot	118						730 −118 612
Total							
Blaster operating time, minutes	1200	1[illegible]	1226	1239.5	1253	1306	66.0
Net sand used, lbs/min	9.3						

Wet sand
4.3 lb/ft²
2.2 ft²/min

Compressor Measurements

	Initial	Port 1	Port 2	Port 3	Port 4	Port 5	Final
Idle pressure, psi	100		100	100	100	100	
Run pressure, psi		88	91	89	92	92	
Engine hrs	1227.1	27.5	27.[illegible]	28.2	28.5	1228.7	1.6 hr
Engine speed, rpm	(1850)	3450	(2250)	3400	(2250)	(2250) 3400	
Cartridge pressure, psi (lbs)	(99)		92	(99) 93	(98) 93	(98) 92	
Cartridge check	✓	✓	✓	✓	✓	✓	
~~ft²~~	–	[illegible]	37.9	67 x 43 20.0	25.5	33.9	144.7
Nozzle position		✓	✓	✓	✓	✓	

40 x 11
58 x 30
24

EPA/AQMD WIND TUNNEL—BLASTING OPERATIONS DATA

MRI Project No. 9712-51

VOID BECAUSE OF RAIN

Date 3/30/93
Run 13 & 14
Start Time

Wind Speed, mph 15
Parts Painted car hoods
Blasting Operator Poandl
Wind Tunnel Operator Cooper

Fan Measurements	Left	Right
Speed, RPM	634	798
Current, Amps	37.5	57
Voltage, Volts	199	200

Temp 67 °F
% RH 67
Bar 28.47 IN Hg

Rain during Port 2 sampling

Wind Tunnel Static Pressure, in. w.c.

South location >1

North location 0.68 - 0.74

Sand Blaster Measurements

	Total
Sand charge (Lbs)	730
Recovered From Pot	118
Net Sand Used	612

Sand Recovered From Tunnel

Total 264

% 43.1

Blaster operating time, minutes 66.0

Net sand used, lbs/min 9.3

Area Cleaned (sq ft) 144.7

Sand used (lbs/ft²) 4.3 (wet sand)

Cleaning Rate (sq ft/min) 2.2

EPA/AQMD WIND TUNNEL—BLASTING OPERATIONS DATA

MRI Project No. 9712-51

Date 4/02/93
Run ~~14~~ 15 + 16
Start Time 0943
End Time 1150

Wind Speed, mph 5
Parts Painted car hoods
Blasting Operator Poandl
Wind Tunnel Operator Cooper

Fan Measurements	Left	Right			
Speed, RPM	252	256	Temp	40	°F
Current, Amps	15	16.5	RH	65	%
Voltage, Volts	204	209	Barometer	29.10	in Hg
motor RPM	1810	1810	Other	Clear	

shut down - proper train

Wind Tunnel Static Pressure, in. w.c.	Initial	Port 1	Port 2	Port 3	Port 4	Port 5	Total
South location	0.14	.15	.13	.16	.12	.13	
North location	0.11	.10	.10	.11	.09	GRC .17	

Sand Blaster Measurements, lbs — Sand Condition Dry

	Initial	Port 1	Port 2	Port 3	Port 4	Port 5	Total
Sand charge	200	400	200	175	125		800
Wind tunnel	14	174	182	158	150	GRC 052	730
Blasting pot	39						39
Total							
Blaster operating time, minutes	1500	1514	1527	1540	1553	1606	66.0
Net sand used, lbs/min							

Compressor Measurements

	Initial	Port 1	Port 2	Port 3	Port 4	Port 5	Final
Idle pressure, psi			100	100	100	100	
Run pressure, psi		93	94	95	95	95	
Engine hrs	1229.7	30.4	31.3 ~~95~~	31.6	31.9	1232.2	2.5
Engine speed, rpm (idle)		3450	2250 3450 (100)	3450	3450	3450	
Cartridge pressure, psi (idle)		94	95	94	95	85	
Cartridge check		✓	✓	✓	✓	✓	
Nozzle position		✓	✓	✓	✓	✓	
Area Cleaned (ft²)		39.3 ~~29.0~~	35.0	36.4	42.1	46.2	199
		62×57 34×50 20×21	31×21 9×20 34×20	34×20 32×62 55×62	29×18 64×48 32×62	25×61 26×22 49×44 62×55	

EPA/AQMD WIND TUNNEL—BLASTING OPERATIONS DATA SUMMARY

MRI Project No. 9712-51

Date 4/02/93
Run 15+16
Start Time 0943
End Time 1150

Wind Speed, mph 5
Parts Painted car hoods
Blasting Operator Poandl
Wind Tunnel Operator Cooper

Fan Measurements	Left	Right		
Speed, RPM	252	256	Temp	40 °F
Current, Amps	15	16.5	RH	65 %
Voltage, Volts 204	~~1810~~	209	Barometer	29.10 in Hg
motor RPM	1810	1810	Other	Clear

Wind Tunnel Static Pressure, in. w.c.

South location 0.12 – 0.16

North location 0.09 – 0.11

Sand Blaster Measurements, lbs

Sand Recovered from Tunnel

Total 730
% 95.9

Sand charge (lbs) 800

Recovered from Pot 39

Net Sand Used 761

Blaster operating time, minutes 66.0

Net sand used, lbs/min 11.5

Area cleaned (sq ft) 199

Sand used (lb/ft^2) 3.8

Cleaning Rate (sq ft/min) 3.0

PRESS-O-FILM™
No. 15+16 Port 1
Mils. 2.0
Gage less 2 0
Testex, Inc.
Newark, DE 19715
X COARSE (1.5-4.5)

PRESS-O-FILM™
No. 15+16 Port 5
Mils. 1.9
Gage less 2 0
Testex, Inc.
Newark, DE 19715
X COARSE (1.5-4.5)

EPA/AQMD WIND TUNNEL—BLASTING OPERATIONS DATA

MRI Project No. 9712-51

Date 4/02/93
Run 17 + 18
Start Time 1408
End Time

Wind Speed, mph 5
Parts clean car hoods
Blasting Operator Poandel
Wind Tunnel Operator Cooper

Fan Measurements	Left	Right			
Speed, RPM			Temp	46 °F	Pot A-BEC industri
Current, Amps	16	17.5	RH	50 %	Ser NO 911649-181
Voltage, Volts	206	210	Barometer	29.02 in Hg	Built 1991
			Other	clear	

Wind Tunnel Static Pressure, in. w.c.	Initial	Port 1	Port 2	Port 3	Port 4	Port 5	Total
South location	.09	.14	.12	.11	.12	.12	.09-.14
North location	.06	.10	.10	.09	~~.12~~ .08	.08	.06-.10

Sand Blaster Measurements, lbs Sand Condition Dry Sand Recd 4/02/93

	Initial	Port 1	Port 2	Port 3	Port 4	Port 5	Total
Sand charge	239	100	0	100	62		501
Wind tunnel	17	164	129	122			432
Blasting pot	69						501 − 69 = 432
Total							
Blaster operating time, minutes	1700	1713	1726.5	1740	1753	1806.5	66.5
Net sand used, lbs/min							

compressor CP Construction Equipment
mod # CPS 130
Serial # CE 12320
Halco NO R.93

Compressor Measurements

	Initial	Port 1	Port 2	Port 3	Port 4	Port 5	Final
Idle pressure, psi	100		100	100	100	100	
Run pressure, psi		88	92	91	91	92	
Engine hrs	1232.2	32.7	33.0	33.3	33.5	1233.8	1.6
Engine speed, rpm (idle)	1800	3450	(2200) 3450	(2200) 3450	3400	(2200) 3450	
Cartridge pressure, psi (idle)	(102)	88	93	92	(100) 93	93	
Cartridge check	✓	✓	✓	✓	✓	✓	
Nozzle position	✓	✓	✓	✓	✓	✓	
Area Cleaned (ft²)	NA	→					

EPA/AQMD WIND TUNNEL—BLASTING OPERATIONS DATA SUMMARY

MRI Project No. 9712-51

Date ~~17~~ 6RC 4/02/93
Run 17 + 18
Start Time 1408
End Time

Wind Speed, mph 5
Parts Clean car Hoods
Blasting Operator Poandl
Wind Tunnel Operator Cooper

Fan Measurements	Left	Right
Speed, RPM		
Current, Amps	16	17.5
Voltage, Volts	206	210

Temp 46 °F
RH 50 %
Barometer 29.02 in Hg
Other Clear

Wind Tunnel Static Pressure, in. w.c.

South location 0.09 - 0.14

North location 0.06 - 0.10

Sand Blaster Measurements, lbs

Sand Recovered from Tunnel

Total 432
% 100

Sand charge (lbs) 501

Recovered from Pot 69

Net Sand Used 432

Blaster operating time, minutes 66.5

Net sand used, lbs/min 6.5

Area cleaned (sq ft) NA

Sand used (lb/ft^2) NA

Cleaning Rate (sq ft/min) NA

PRESS-O-FILM™
No. 17+18 Port 5
Mils. 2.25
Gage less 2.0
Testex, Inc.
Newark, DE 19715
X COARSE (1.5-4.5)

EPA/AQMD WIND TUNNEL—BLASTING OPERATIONS DATA

MRI Project No. 9712-51

Date 4/05/93
Run 19 + 20
Start Time 1000
End Time

Wind Speed, mph 5
Parts Rusted Steel
Blasting Operator Roandel
Wind Tunnel Operator Cooper

Fan Measurements	Left	Right			
Speed, RPM	256	257	Temp	38	°F
Current, Amps	15	17	RH	64	%
Voltage, Volts	204	206	Barometer	29.08	in Hg
motor RPM	1798	1818	Other	Clear	

Wind Tunnel Static Pressure, in. w.c.	Initial	Port 1	Port 2	Port 3	Port 4	Port 5	Total
South location	0.14	0.14	0.13	0.13	0.13	0.15	0.13 – 0.15
North location	0.10	0.10	0.09	0.09	0.09	0.10	0.09 – 0.10

Sand Blaster Measurements, lbs Sand Condition Dry

	Initial	Port 1	Port 2	Port 3	Port 4	Port 5	Total
Sand charge	203	150	150	150	150		803
Wind tunnel	17	226	246	169	54		712
Blasting pot	70						803 − 70 = 733
Total							
Blaster operating time, minutes	0700	0713	0726	0739	0752	0805	65.0
Net sand used, lbs/min							

Compressor Measurements

	Initial	Port 1	Port 2	Port 3	Port 4	Port 5	Final
Idle pressure, psi	100			100	100	100	
Run pressure, psi		95	92	97	95	94	
Engine hrs	1234.2	34.7	34.9	35.3	35.6	1235.9	1.7
Engine speed, rpm (idle)	(2250)	3450	3450	3450	3450 (99)	3450	
Cartridge pressure, psi (idle)	(99)	95	94	96	95	93	
Cartridge check	✓	✓	✓	✓	✓	✓	
Nozzle position	✓	✓	✓	✓	✓	✓	
Area Cleaned (ft²)	X	22.0	23.3	23.6	23.6	24.1	116.7
		32x48	3x32	12x32	22x32	29x32	
		32x48	32x48	32x48	34x48	46x48	
			32x48	32x48	32x48	34x48	

EPA/AQMD WIND TUNNEL—BLASTING OPERATIONS DATA SUMMARY

MRI Project No. 9712-51

Date 4/05/93
Run 19 & 20
Start Time 1000
End Time

Wind Speed, mph 5
Parts Rusted
Blasting Operator Poandl
Wind Tunnel Operator Cooper

Fan Measurements	Left	Right
Speed, RPM	256	257
Current, Amps	15	17
Voltage, Volts	204	206
motor RPM	1798	1818

Temp 38 °F
RH 64 %
Barometer ~~28.0~~ in Hg 29.08 GRC
Other Clear

Wind Tunnel Static Pressure, in. w.c.

South location 0.13 – 0.15

North location 0.09 – 0.10

Sand Blaster Measurements, lbs

Sand Recovered from Tunnel

Total 712
% 97.1

Sand charge (lbs) 803

Recovered from Pot 70

Net Sand Used 733

Blaster operating time, minutes 65.0

Net sand used, lbs/min 11.3

Area cleaned (sq ft) 116.7

Sand used (lb/ft^2) 6.3

Cleaning Rate (sq ft/min) 1.8

PRESS-O-FILM™
No. 19+20 Port 1
Mils. 2.5
Gage less 2 0
Testex, Inc.
Newark, DE 19715
X COARSE (1.5-4.5) GRC

PRESS-O-FILM™
No. 19+20 Port 3
Mils. 2.5
Gage less 2 0
Testex, Inc.
Newark, DE 19715
X COARSE (1.5-4.5) GRC

EPA/AQMD WIND TUNNEL—BLASTING OPERATIONS DATA

MRI Project No. 9712-51

Date 4/05/93
Run 21 & 22
Start Time 1405
End Time

Wind Speed, mph 15
Parts Painted car Hoods
Blasting Operator Pounell
Wind Tunnel Operator Cooper

Fan Measurements	Left	Right
Speed, RPM	794	798
Current, Amps	55	57
Voltage, Volts	195	197
motor RPM	1785	1790

Temp 52 °F
RH 51 %
Barometer 29.03 in Hg
Other Clear to partly cloudy

L 1785 R 1790 motor R

Wind Tunnel Static Pressure, in. w.c.	Initial	Port 1	Port 2	Port 3	Port 4	Port 5	Total
South location	Disconnected						
North location	1.1	1.1	1.1	1.1	1.1	1.1	1.1

Sand Blaster Measurements, lbs Sand Condition Dry

	Initial	Port 1	Port 2	Port 3	Port 4	Port 5	Total
Sand charge	170	150	150	100	100		670
Wind tunnel	16	142	130	149			437
Blasting pot	47						670 −47
Total							623
Blaster operating time, minutes	0900	0913	0926	0938.5	0952	1004.5	64.5
Net sand used, lbs/min							

Compressor Measurements

	Initial	Port 1	Port 2	Port 3	Port 4	Port 5	Final
Idle pressure, psi	100		100		100	99	
Run pressure, psi		95	90	96	95	95	
Engine hrs	1235.9	36.2	36.5	36.0	37.2	1237.4	1.5
Engine speed, rpm (idle)	(2300)	3450	3450	3450	(2200) 3400	3450	
Cartridge pressure, psi (idle)	(100)	95	91	95	(99) 95	95	
Cartridge check	✓	✓	✓	✓	✓	✓	
Nozzle position	✓	✓	✓	✓	✓	✓	
Area Cleaned (ft²)	X	43.2	33.8	44.1	40.4	42.1	203.6
		45×60	60×43	51×45×2	51×46	39×59	
		46×51	⟨30×25⟩	49×43	45×54	44×51	
		26×45	25×43	⟨20×17⟩	28×37	49×38	

APPENDIX E

CALIBRATION DATA

REQUEST FOR POST TEST CALIBRATION

Test Location FIELD STATION ABRASIVE STUDY Test Dates 3/23/93 - 4/6/93

Crew Chief D. LETNEY Project No. 9712-51-16

M5 Console Number	Avg. ^H	Pyrometer Number	X.A.D. TC No.	Sample Box Number
N 12	.93			011190
N 11	1.00			010288
N 10	.92			011187
N 9	1.00			011189
				011192
				010196

Probe No.	Stack T.C. No.	Avg. Stack Temp.	Pitot No.
VL-7	96-4 ✓	40	P-15 ✓
VL-5	96-6 ✓	40	P-3 ✓
VL-1	96-6A ✓	40	M-14 ✓
VL-4	96-2 ✓	40	S-12 ✓

VOST Console No.	VOST Train No.	VOST T.C. No.

Gooseneck No.'s UH-6 ✓ UH-9 ✓ UH-10 ✓ UH-30 ✓ UH-34 ✓ UH-37 ✓

Barometer No. Y-2100 ✓

List Other Equipment to be Calibrated

METHOD 5 CONSOLE CALIBRATION WITH CRITICAL ORIFICE

PROJECT # 9712-51-16 Orifice # 04
Date: 4/13/93 Orifice K: .48033
Operator: HARMON Previous Y: 1.019
Console # N9

	Run 1	Run 2	Run 3
Initial DGM Volume	652.400	658.677	
Final DGM Volume	658.677	664.986	
Net DGM Volume (Vm)	6.277	6.309	
DGM Temperature, Deg.F:			
Initial Inlet	86	88	
Final Inlet	88	90	
Initial Outlet	81	83	
Final Outlet	83	84	
Average DGM Temperature (tm)	84.5	86.5	
Time, seconds	600	600	
Orifice Delta H, inches w.c.	1.350	1.350	
Barometric Pressure, in.Hg	28.90	28.90	
Critical Orifice Inlet Temp., Deg.F:			
Initial	82	82	
Final	82	82	
Average Critical Orifice Inlet Temp.	82.0	82.0	
Pump Vacuum, in.Hg	19	19	
Critical Orifice Volume (Vcr (std))	5.964	6.171	
DGM Volume (Vm (std))	5.899	6.114	
DGM Calibration Factor (Y)	1.011	1.009	
Orifice Delta H@	2.013	1.939	
Average DGM Calibration Factor (Y)	1.010		
Average Orifice Delta H@	1.976		
+/- 2% From Average Y Criteria:			
Percent Difference From Average Y	.09	.09	
Tolerance Result	PASS	PASS	
+/- 5% From Previous Y Criteria:			
Percent Difference From Previous Y	.87		
Tolerance (Average) Result	PASS		

METHOD 5 CONSOLE CALIBRATION WITH CRITICAL ORIFICE

PROJECT # 9712-51-16 Orifice # C4
Date: 4/14/93 Orifice K: .48033
Operator: HARMON Previous Y: 1.017
Console # N10

	Run 1	Run 2	Run 3
Initial DGM Volume	549.800	556.123	
Final DGM Volume	556.123	562.437	
Net DGM Volume (Vm)	6.323	6.314	
DGM Temperature, Deg.F:			
Initial Inlet	88	90	
Final Inlet	90	92	
Initial Outlet	83	85	
Final Outlet	85	87	
Average DGM Temperature (tm)	86.5	88.5	
Time, seconds	600	600	
Orifice Delta H, inches w.c.	1.350	1.350	
Barometric Pressure., in.Hg	28.88	28.88	
Critical Orifice Inlet Temp., Deg.F:			
Initial	78	78	
Final	78	78	
Average Critical Orifice Inlet Temp.	78.0	78.0	
Pump Vacuum, in.Hg	19	19	
Critical Orifice Volume (Vcr (std))	5.982	5.982	
DGM Volume (Vm (std))	5.917	5.887	
DGM Calibration Factor (Y)	1.011	1.016	
Orifice Delta H@	1.992	1.985	
Average DGM Calibration Factor (Y)	1.014		
Average Orifice Delta H@	1.989		
+/- 2% From Average Y Criteria:			
Percent Difference From Average Y	.25	.25	
Tolerance Result	PASS	PASS	
+/- 5% From Previous Y Criteria:			
Percent Difference From Previous Y	.32		
Tolerance (Average) Result	PASS		

METHOD 5 CONSOLE CALIBRATION WITH CRITICAL ORIFICE

PROJECT #	9712-51-16	Orifice #	C4
Date:	4/14/93	Orifice K:	.48033
Operator:	HARMON	Previous Y:	1.015
Console #	N11		

	Run 1	Run 2	Run 3
Initial DGM Volume	638.900	645.174	
Final DGM Volume	645.174	651.490	
Net DGM Volume (Vm)	6.274	6.316	
DGM Temperature, Deg.F:			
Initial Inlet	79	80	
Final Inlet	80	82	
Initial Outlet	78	79	
Final Outlet	79	80	
Average DGM Temperature (tm)	79.0	80.3	
Time, seconds	600	600	
Orifice Delta H, inches w.c.	1.350	1.350	
Barometric Pressure, in.Hg	28.88	28.88	
Critical Orifice Inlet Temp., Deg.F:			
Initial	78	78	
Final	78	78	
Average Critical Orifice Inlet Temp.	78.0	78.0	
Pump Vacuum, in.Hg	19	19	
Critical Orifice Volume (Vcr (std))	5.982	5.982	
DGM Volume (Vm (std))	5.952	5.978	
DGM Calibration Factor (Y)	1.005	1.001	
Orifice Delta H@	2.020	2.015	
Average DGM Calibration Factor (Y)	1.003		
Average Orifice Delta H@	2.018		
+/- 2% From Average Y Criteria:			
Percent Difference From Average Y	.22	.22	
Tolerance Result	PASS	PASS	
+/- 5% From Previous Y Criteria:			
Percent Difference From Previous Y	1.20		
Tolerance (Average) Result	PASS		

METHOD 5 CONSOLE CALIBRATION WITH CRITICAL ORIFICE

PROJECT #	9712-51-16	Orifice #	C4
Date:	4/14/93	Orifice K:	.48033
Operator:	HARMON	Previous Y:	1.023
Console #	N12		

	Run 1	Run 2	Run 3
Initial DGM Volume	615.100	621.300	
Final DGM Volume	621.300	627.523	
Net DGM Volume (Vm)	6.200	6.223	
DGM Temperature, Deg.F:			
Initial Inlet	80	83	
Final Inlet	80	85	
Initial Outlet	79	79	
Final Outlet	79	80	
Average DGM Temperature (tm)	80.1	81.8	
Time, seconds	600	600	
Orifice Delta H, inches w.c.	1.250	1.250	
Barometric Pressure., in.Hg	28.88	28.88	
Critical Orifice Inlet Temp., Deg.F:			
Initial	78	78	
Final	78	78	
Average Critical Orifice Inlet Temp.	78.0	78.0	
Pump Vacuum, in.Hg	19	19	
Critical Orifice Volume (Vcr (std))	5.982	5.982	
DGM Volume (Vm (std))	5.867	5.873	
DGM Calibration Factor (Y)	1.020	1.019	
Orifice Delta H@	1.865	1.860	
Average DGM Calibration Factor (Y)	1.019		
Average Orifice Delta H@	1.862		
+/- 2% From Average Y Criteria:			
Percent Difference From Average Y	.05	.05	
Tolerance Result	PASS	PASS	
+/- 5% From Previous Y Criteria:			
Percent Difference From Previous Y	.37		
Tolerance (Average) Result	PASS		

ORIFICE BRACKETING WORKSHEET

Project	9712-51-16	CONSOLE #	N12
Date	4/14/93	Orifice No. 1	C2
Operator	HARMON	Orifice NO.1 K factor	.6112
Orfice Number	C4	Orifice No. 2	C3
Orfice Y factor	1.019	Orifice NO.2 K factor	.4271

	Orfice #1	Orfice #2
Final DGM Volume	636.125	641.747
Inital DGM Volume	628.100	636.200
Net DGM Volume (Vm)	8.025	5.547
In/Out DGM Temp.		
Inlet		
initial	83.0	84.0
final	84.0	85.0
Outlet		
initial	82.0	83.0
final	82.0	83.0
Avg. DGM Temp	83.0	83.8
Time, sec.	600.0	600.0
Orifice DH, in. H2O	2.08	.89
Baro. Press., in. Hg	28.88	28.88
Room temp., Deg. F	78.0	78.0
Pump Vacuum, in. Hg	19	19
Vcr (std)	7.610	5.518
Vm (std)	7.569	5.209
Y Factor (bracket)	1.005	1.021
+/- 2% criteria		
Percent of Y	1.34	.19
	PASS	PASS

SAMPLE BOX FILTER THERMOCOUPLE CALIBRATION DATA FORM

Date 4/15/93 Job Number 9712-51-16

Ambient Temp. 75° F Barometer 28.75 in.Hg

Calibrator HARMON Reference Thermometer 1/8" CALIBRATED THERMOCOUPLE

Pyrometer No. Y-0315 Serial Number 302905968 - NIST

Calibration Method: Sample Box Heated to 250 F with M5 Console - Checked with ASTM Thermometer

Sample Box No.	Reference Thermometer Temperature F	Pyrometer Temperature F	Temperature Difference +/- 5.4 F
011190	235.6°	238.2°	2.6°
010288	238.8°	240.6°	1.8°
011187	222.4°	225.0°	2.6°
011189	248.8°	252.2°	3.4°
011192	248.0°	252.6°	4.6°
010196	242.6°	245.2°	2.6°

LOW TEMP. STACK THERMOCOUPLE CALIBRATION DATA FORM

Job No. 9712-51-16

Stack Thermocouple No. 96-4

Date 4/15/93

Barometer 28.75 in.Hg

Ambient Temp. 75° F

Pyrometer No. Y-0815

Calibrator HARMON

a.) Ice bath @ 32 degrees F.
b.) Ambient temp. water bath
c.) Ambeint air @ room temp.

Avg. Stack Temp. 40° F

THERMOMETER – ASTM 14-990-5A — 4268K

Reference Instrument Temperature F	Pyrometer Temperature F	Temperature Difference F	Temperature Difference % *
			–
32.1°	31.8°	0.3°	0.0610
65.0°	63.6°	1.4°	0.2667
75.8°	74.6°	1.2°	0.2240

$$* \left[\frac{(\text{ref.temp., F} + 460) - (\text{pyro.temp., F} + 460)}{(\text{ref.temp., F} + 460)} \right] * 100 \leq 1.5\%$$

LOW TEMP. STACK THERMOCOUPLE CALIBRATION DATA FORM

Job No. 9712-51-15

Stack Thermocouple No. 96-6

Date 4/15/93

Barometer 28.75 in.Hg

Ambient Temp. 75° F

Pyrometer No. Y-0815

Calibrator HARMON

Avg. Stack Temp. 40° F

a.) Ice bath @ 32 degrees F.
b.) Ambient temp. water bath
c.) Ambeint air @ room temp.

Reference Instrument Temperature F	Pyrometer Temperature F	Temperature Difference F	Temperature Difference % *
32.1	31.8	0.3	0.0610
65.0	63.6	1.4	0.2667
75.8	74.8	1.0	0.1866

$$* \left[\frac{(\text{ref.temp., F} + 460) - (\text{pyro.temp., F} + 460)}{(\text{ref.temp., F} + 460)} \right] * 100 \leq 1.5\%$$

LOW TEMP. STACK THERMOCOUPLE CALIBRATION DATA FORM

Job No. 9712-51-16

Stack Thermocouple No. 96-6 A

Date 4/15/93

Barometer 28.75 in.Hg

Ambient Temp. 75° F

Pyrometer No. Y-0815

Calibrator HARMON

a.) Ice bath @ 32 degrees F.
b.) Ambient temp. water bath
c.) Ambeint air @ room temp.

Avg. Stack Temp. 40° F

THERMOMETER - ASTM 14-990-5A-4268 K

Reference Instrument Temperature F	Pyrometer Temperature F	Temperature Difference F	Temperature Difference % *
32.1°	31.8°	0.3°	0.0610
65.0°	63.6°	1.4°	0.2667
75.8°	74.6	1.2°	0.2240

$$* \left[\frac{(\text{ref.temp., F} + 460) - (\text{pyro.temp., F} + 460)}{(\text{ref.temp., F} + 460)} \right] * 100 \leq 1.5\%$$

LOW TEMP. STACK THERMOCOUPLE CALIBRATION DATA FORM

Job No. 9712-51-16

Stack Thermocouple No. 96-2

Date 4/15/93

Barometer 28.75 in.Hg

Ambient Temp. 75° F

Pyrometer No. Y-0815

Calibrator HARMON

a.) Ice bath @ 32 degrees F.
b.) Ambient temp. water bath
c.) Ambeint air @ room temp.

Avg. Stack Temp. 40° F

THERMOMETER ASTM-14-990-5A-4268 K

Reference Instrument Temperature F	Pyrometer Temperature F	Temperature Difference F	Temperature Difference % *
			–
32.1	31.0	1.1	0.2235
65.0	63.6	1.4	0.2667
75.8	74.2	1.6	0.2986

$$* \left[\frac{(\text{ref.temp., F} + 460) - (\text{pyro.temp., F} + 460)}{(\text{ref.temp., F} + 460)} \right] * 100 \leq 1.5\%$$

TYPE S PITOT TUBE INSPECTION DATA FORM

Pitot tube assembly level? X yes _____ no

Pitot tube openings damaged? _____ yes (explain below) X no

α_1 = 1 ° (<10°), α_2 = 0 ° (<10°)

β_1 = 2 ° (<5°), β_2 = 0 ° (<5°)

γ = 0 °, θ = 1 °, A = 0.703 (in.)

z = A sin γ = 0 (in.); (<0.125 in.)

w = A sin θ = 0.01227 (in.); (<0.03125 in.)

P_A = 0.345 (in.), P_B = 0.358 (in.), D_t = 0.249 (in.)

Comments: _____

Calibration required? _____ yes X no

PITOT TUBE # P-15 DATE 4/14/93 NAME HARMON

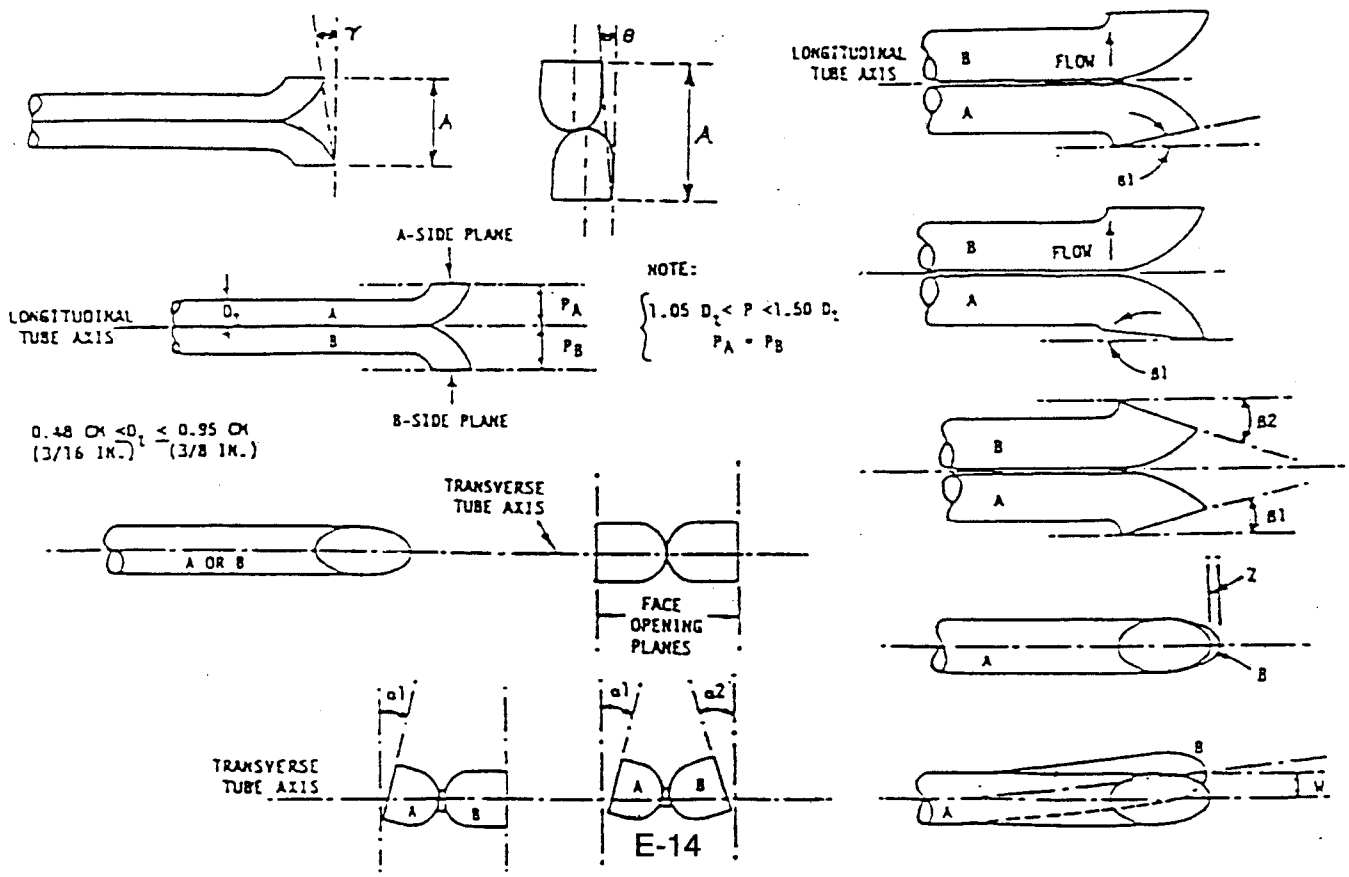

MIDWEST RESEARCH INSTITUTE

PITOT TUBE CALIBRATION FORM

Pitot Tube Number: P-15

Calibrated by: FG, RS, KE, DM

Date: 1-15-90

C_{pstd} =

Avg = .834

ΔP_{std} ≈ 0.55 or as required

	Side "A" (in. H_2O)				Side "B" (in. H_2O)			
Run No.	ΔP_{std}	$\Delta P_{(s)}$	$C_{p(s)}$	Dev.	ΔP_{std}	$\Delta P_{(s)}$	$C_{p(s)}$	Dev.
1	.882	1.245	.8332	.0005	.882	1.234	.8369	.0017
2	.882	1.247	.8325	-.0002	.882	1.241	.8346	-.0006
3	.883	1.249	.8324	-.0003	.882	1.242	.8342	-.001
		Average $\bar{C}_p$ A	.8327			Average $\bar{C}_p$ B	.8352	

C_{Pstd} = Pitot tube coefficient of standard type pitot tube

$$C_{p(s)} = C_{Pstd}\sqrt{\frac{\Delta P_{std}}{\Delta P_{(s)}}}$$

Dev. = $C_{p(s)} - \bar{C}_p$ (must be ≤ 0.01)

C_p(difference) = $|\text{Average}_A - \text{Average}_B|$ = -.0025 (must be ≤ 0.01)

$$\sigma \text{ (side A or B)} = \sum_1^3 \frac{|C_{p(s)} - \bar{C}_p \text{ (A or B)}|}{3}$$ (must be ≤ 0.01)

σA = _____

σB = _____

.8327
.8352
1.6679

.8339
2 1.6679
16
6
6
7
6
19

TYPE S PITOT TUBE INSPECTION DATA FORM

Pitot tube assembly level? X yes ____ no

Pitot tube openings damaged? ____ yes (explain below) X no

α_1 = 2 ° (<10°), α_2 = 3 ° (<10°)

β_1 = 1 ° (<5°), β_2 = 1 ° (<5°)

γ = 1 °, θ = 0 °, A = 0.685 (in.)

z = A sin γ = 0.01196 (in.); (<0.125 in.)

w = A sin θ = 0 (in.); (<0.03125 in.)

P_A = 0.339 (in.), P_B = 0.346 (in.), D_t = 0.248 (in.)

Comments: ____

Calibration required? ____ yes X no

PITOT TUBE # P-3 DATE 4/14/93 NAME HARMON

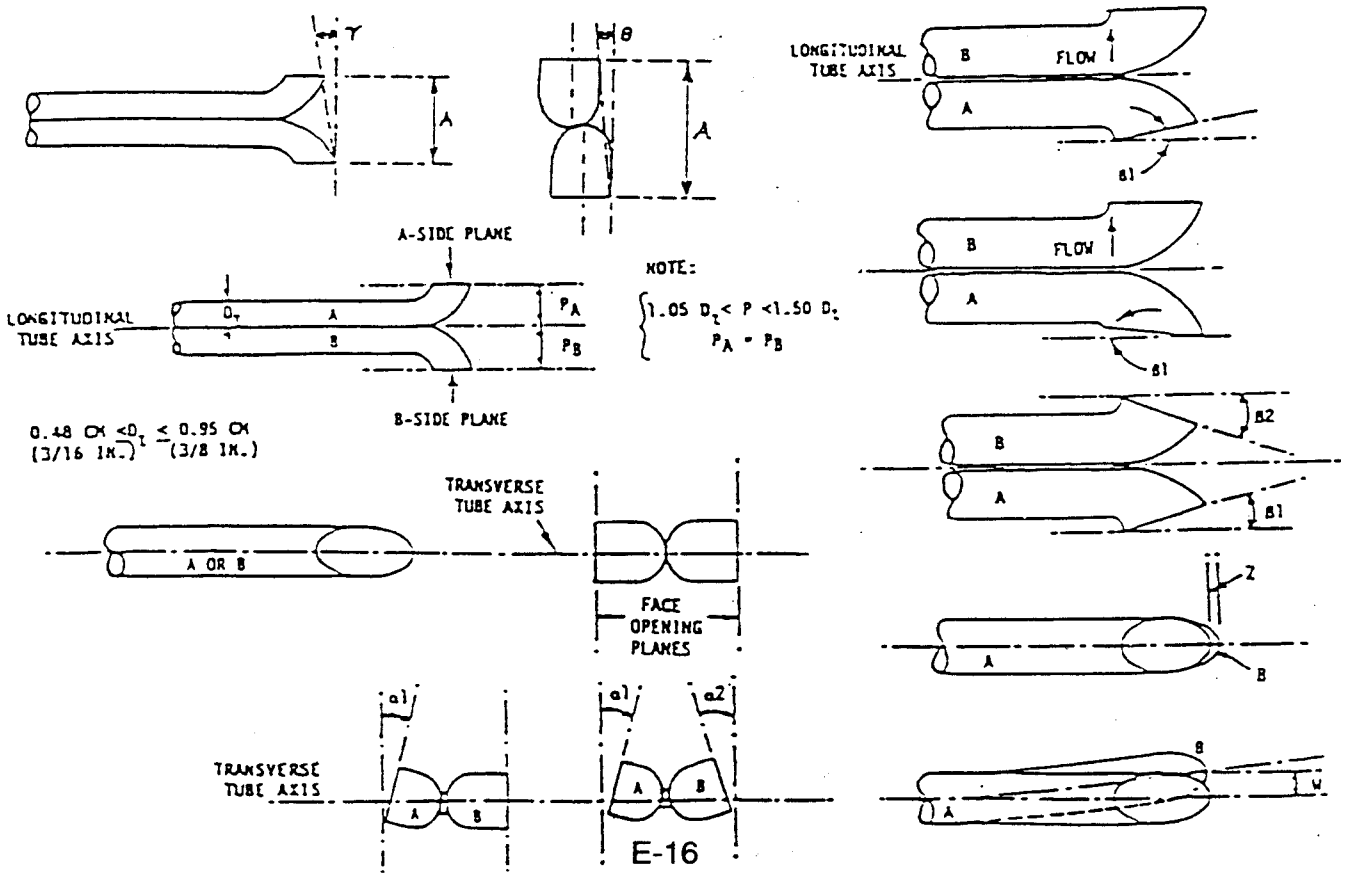

MIDWEST RESEARCH INSTITUTE

PITOT TUBE CALIBRATION FORM

Pitot Tube Number: P-3

Calibrated by:

Date: 1-15-90

C_{pstd} = .99

CP = .833

ΔP_{std} ≈ 0.55 or as required

	Side "A" (in. H_2O)				Side "B" (in. H_2O)			
Run No.	ΔP_{std}	$\Delta P_{(s)}$	$C_{p(s)}$	Dev.	ΔP_{std}	$\Delta P_{(s)}$	$C_{p(s)}$	Dev.
1	.868	1.224	.8336	.000	.872	1.229	.8339	.0007
2	.872	1.229	.8339	.0003	.868	1.229	.8319	-.0013
3	.869	1.226	.8334	-.0002	.869	1.225	.8338	.0006
		Average $\bar{C}_p$ A	.8336			Average $\bar{C}_p$ B	.8332	

C_{Pstd} = Pitot tube coefficient of standard type pitot tube

$$C_{p(s)} = C_{Pstd}\sqrt{\frac{\Delta P_{std}}{\Delta P_{(s)}}}$$

.8336
.8332
1.6668

Dev. = $C_{p(s)} - \bar{C}_p$ (must be ≤ 0.01)

C_p(difference) = $|\text{Average}_A - \text{Average}_B|$ = .0004 (must be ≤ 0.01)

.8334
2) 1.6668

$$\sigma \text{ (side A or B)} = \sum_{1}^{3} \frac{|C_{p(s)} - \bar{C}_p \text{ (A or B)}|}{3}$$ (must be ≤ 0.01)

σA = _____

σB = _____

TYPE S PITOT TUBE INSPECTION DATA FORM

Pitot tube assembly level? X yes ____ no

Pitot tube openings damaged? ____ yes (explain below) X no

α_1 = 0 ° (<10°), α_2 = 0 ° (<10°)

β_1 = 3 ° (<5°), β_2 = 1 ° (<5°)

γ = 0 °, θ = 0 °, A = 0.635 (in.)

z = A sin γ = 0 (in.); (<0.125 in.)

w = A sin θ = 0 (in.); (<0.03125 in.)

P_A = 0.276 (in.), P_B = 0.359 (in.), D_t = 0.246 (in.)

Comments: ____

Calibration required? ____ yes X no

PITOT TUBE # M-14 DATE 4/14/93 NAME HARMON

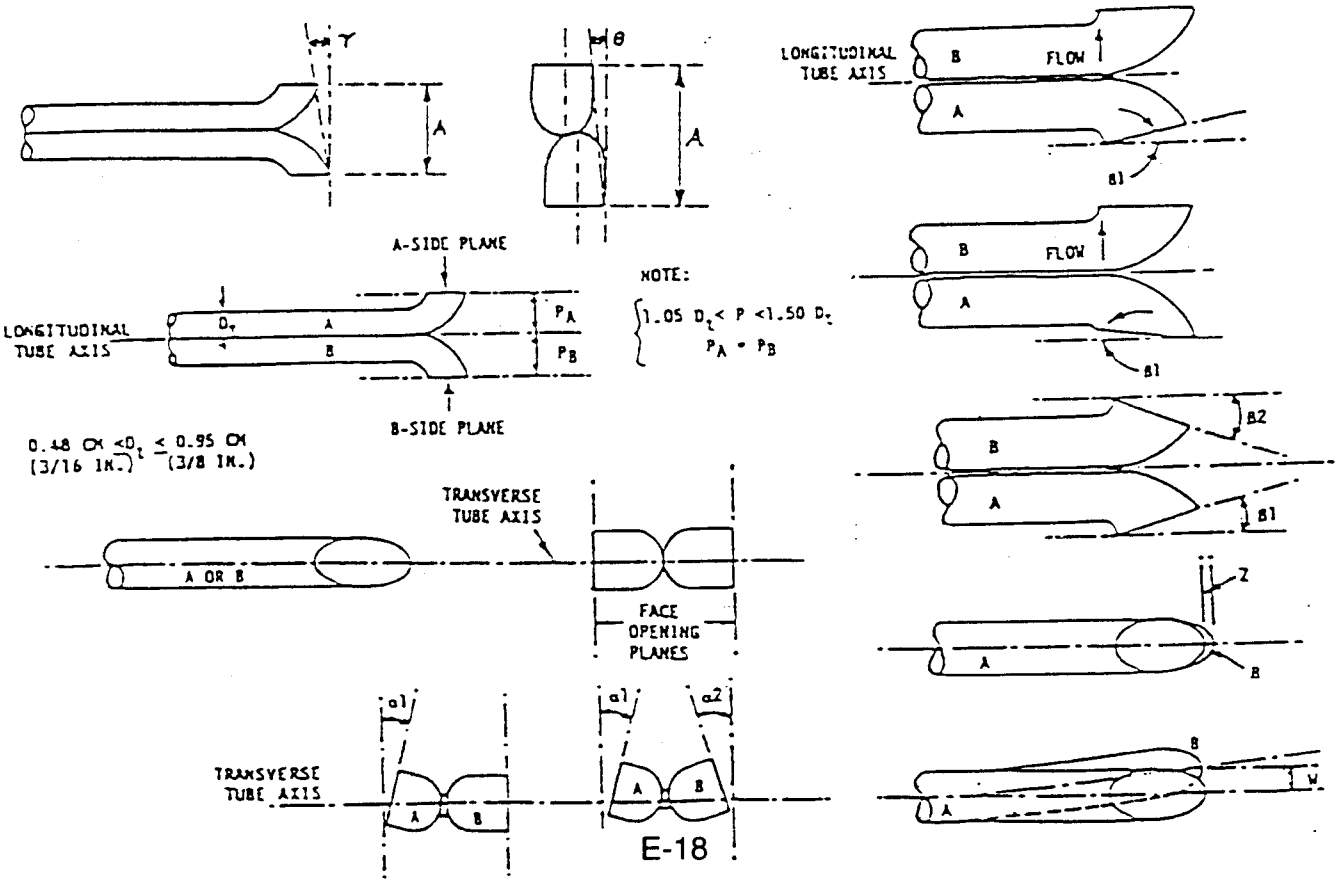

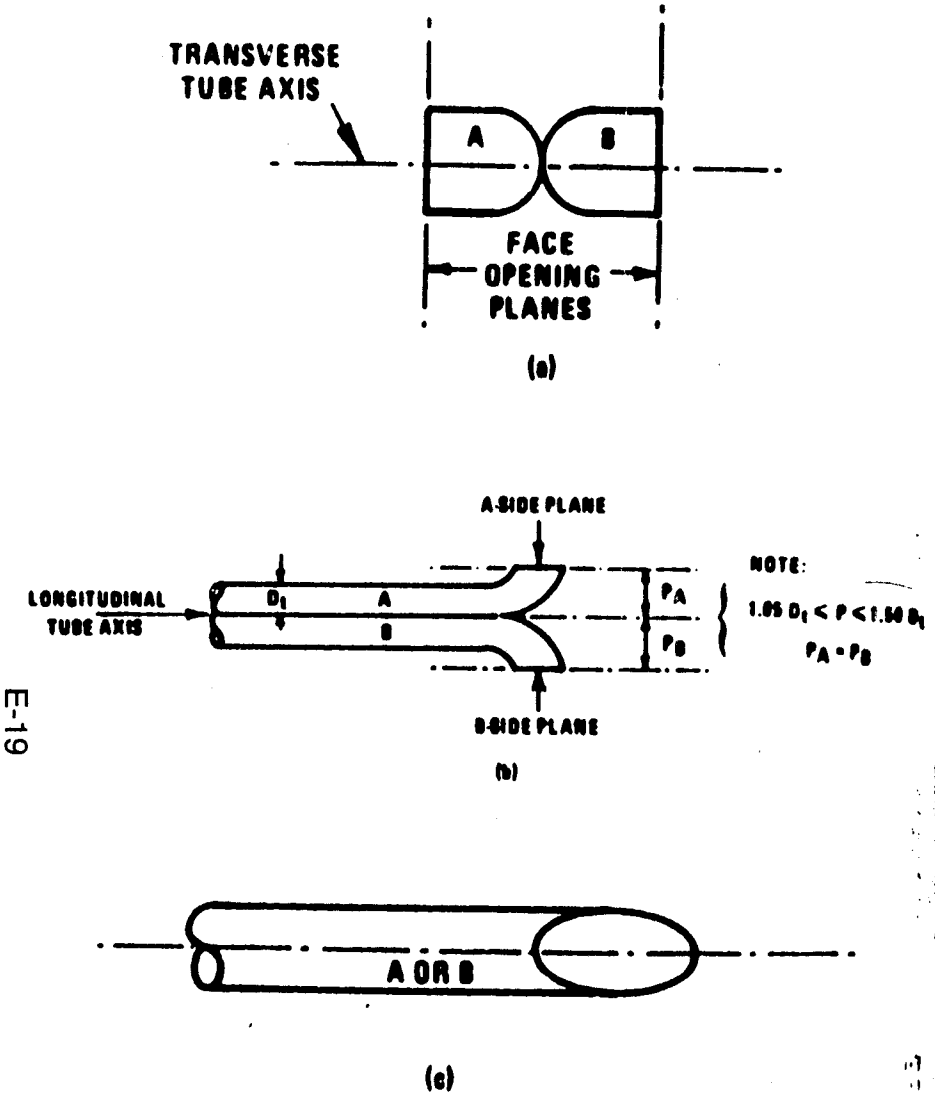

Figure 2-2. Properly constructed Type S pitot tube, shown in: (a) end view; face opening planes perpendicular to transverse axis; (b) top view; face opening planes parallel to longitudinal axis; (c) side view; both legs of equal length and centerlines coincident, when viewed from both sides. Baseline coefficient values of 0.84 may be assigned to pitot tubes constructed this way.

ALL PITOT SETS DESIGNATED M-XX

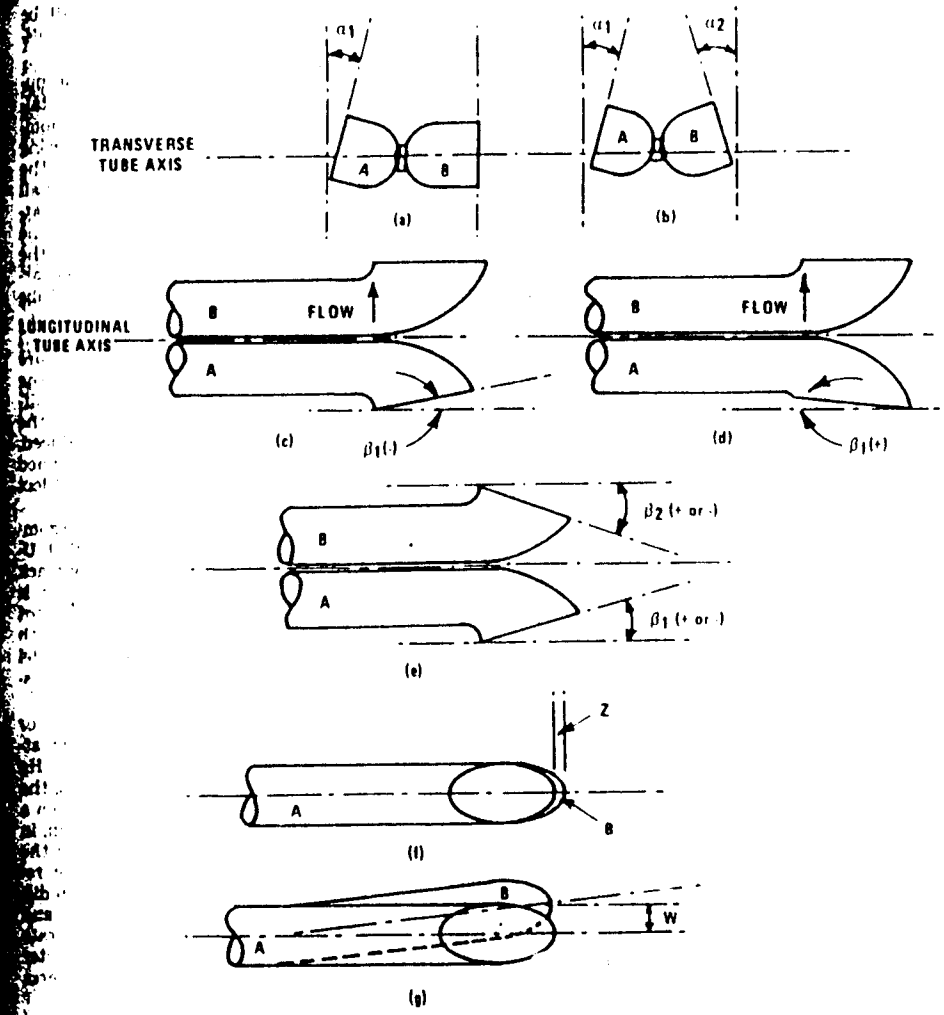

Figure 2-3. Types of face-opening misalignment that can result from field use or improper construction of Type S pitot tubes. These will not affect the baseline value of Cp(s) so long as α1 and α2 < 10°, β1 and β2 < 5°, z < 0.32 cm (1/8 in.) and w < 0.08 cm (1/32 in.) (citation 11 in Section 6).

A standard pitot tube may be used instead of a Type S, provided that it meets the specifications of Sections 2.7 and 4.2; note, however, that the static and impact pressure holes of standard pitot tubes are susceptible to plugging in particulate-laden gas streams. Therefore, whenever a standard pitot tube is used to perform a traverse, adequate proof must be furnished that the openings of the pitot tube have not plugged up during the traverse period; this can be done by taking a velocity head (Δp) reading at the final traverse point, cleaning out the impact and static holes of the standard pitot tube by "back-purging" with pressurized air, and then taking another Δp reading. If the Δp readings made before and after the air purge are the same (±5 percent), the traverse is acceptable. Otherwise, reject the run. Note that if Δp at the final traverse point is unsuitably low, another point may be selected. If "back-purging" at regular intervals is part of the procedure, then comparative Δp readings shall be taken, as above, for the last two back purges at which suitably high Δp readings are observed.

TYPE S PITOT TUBE INSPECTION DATA FORM

Pitot tube assembly level? X yes ____ no

Pitot tube openings damaged? ____ yes (explain below) X no

α_1 = 0 ° (<10°), α_2 = 0 ° (<10°)

β_1 = 0 ° (<5°), β_2 = 0 ° (<5°)

γ = 1 °, θ = 0 °, A = 0.697 (in.)

z = A sin γ = 0.0122 (in.); (<0.125 in.)

w = A sin θ = 0 (in.); (<0.03125 in.)

P_A = 0.351 (in.), P_B = 0.346 (in.), D_t = 0.253 (in.)

Comments: ____

Calibration required? ____ yes X no

PITOT TUBE # S-12 DATE 4/14/93 NAME HARMON

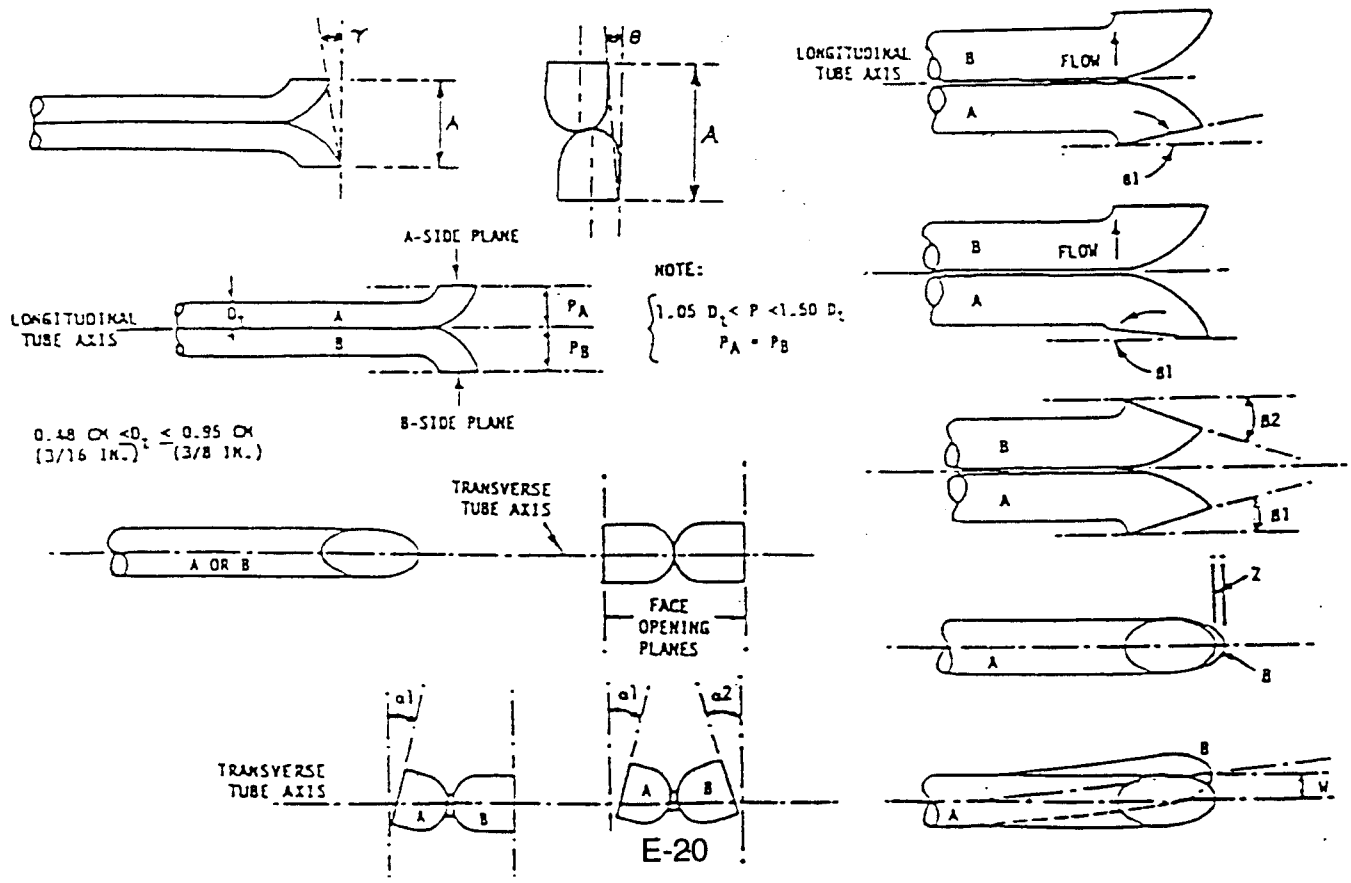

MIDWEST RESEARCH INSTITUTE

PITOT TUBE CALIBRATION FORM

Pitot Tube Number: S-12

Calibrated by: FG, RCS

Date: 1-15-90

C_{pstd} = .99

ΔP_{std} = 0.55 or as required

	Side "A" (in. H_2O)				Side "B" (in. H_2O)			
Run No.	ΔP_{std}	$\Delta P_{(s)}$	$C_{p(s)}$	Dev.	ΔP_{std}	$\Delta P_{(s)}$	$C_{p(s)}$	Dev.
1	.879	1.343	.8009	-.0049	.879	1.279	.8207	-.0053
2	.881	1.335	.8042	-.0016	.880	1.255	.3290	.003
3	.881	1.308	.8124	.0066	.881	1.258	.8284	.0024
		Average $\bar{C}_p$ A	.8058			Average $\bar{C}_p$ B	.826	

C_{Pstd} = Pitot tube coefficient of standard type pitot tube

$$C_{p(s)} = C_{Pstd} \sqrt{\frac{\Delta P_{std}}{\Delta P_{(s)}}}$$

.8159

Dev. = $C_{p(s)} - \bar{C}_p$ (must be ≤ 0.01)

C_p(difference) = $\left|\text{Average}_A - \text{Average}_B\right|$ = .0202 (must be ≤ 0.01)

$$\sigma \text{ (side A or B)} = \sum_1^3 \frac{\left|C_{p(s)} - \bar{C}_p \text{ (A or B)}\right|}{3} \quad \text{(must be} \leq 0.01)$$

σA = _____

σB = _____

GOOSENECK THERMOCOUPLE CALIBRATION DATA FORM

Date 4/15/93 Job Number 9712-51-16

Ambient Temp. 75° F Barometer 28.75 in.Hg

Calibrator HARMON Reference Thermometer ASTM D900

Pyrometer No. Y-0815 Serial Number PSCO 63170

Calibration Method: Ambient Water Bath with ASTM Thermometer

Goose-neck T.C. No.	Leak Check & Check Valve Pass/No-Pass	Reference Thermometer Temperature F	Pyrometer Temperature F	Temperature Difference +/- 2 deg F
UH-6	PASS	72°	71.6	0.4
UH-9	PASS		71.4	0.6
UH-10	PASS		71.4	0.6
UH-30	PASS		71.8	0.2
UH-34	PASS		71.6	0.4
UH-37	PASS		71.4	0.6
UH-1	PASS		71.6	0.4
UH-4	PASS		71.4	0.6
UH-31	PASS		71.6	0.4
UH-33	PASS		71.6	0.4

MERCURY BAROMETER READING CORRECTION
AND ANEROID BAROMETER CALIBRATION

Location: Kansas City, Missouri

Altitude Above Sea Level: 913 feet

Latitude: 39-degrees, 05.8'

Meteorological Gravity: 32.1516 feet/second squared

Mercury Barometer: Sargent Welch, Cat. S-4519, Lot 791802000

MRI Project No.: 6712-51-16

Date: 4/14/93

Time: 16:17

Observer: HARMON

L. Harmon

Observed Barometer Reading:	28.95	in. Hg
Mercury Column Temperature:	77.0	°F
Correction For Temperature:	-.12	in. Hg
Correction For Gravity:	-.02	in. Hg
Corrected Barometric Pressure:	28.81	in. Hg

Aneroid Barometer I.D. No.: Y-2100

Reading Before Adjustment:	28.82	in. Hg
Calibration Check Result:	within 0.1	in. Hg
Reading After Adjustment:	_____	in. Hg

REMARKS:

APPENDIX F

SUPPLEMENTAL SOURCE CHARACTERIZATION DATA

Huntingdon
Consulting Engineers Environmental Scientists

Kansas City Testing Laboratory, Inc.
2012 West 104th Street
Box 6323
Leawood, Kansas 66206
(913) 648-2303
Fax: (913) 642-3679

April 28, 1993

Gary Cooper
MRI
425 Volker
Kansas City, MO 64110

Reference: One bag of Flintshot Sandblasting Sand delivered to the laboratory April 20, 1993
KCTL# 741 Re: 8312-93-0144

REPORT OF TEST RESULTS

LA ABRASION ASTM C131 (Modified for Aggregate Material (2.36 mm),
% Loss 0.30

Thank you for your continued interest in Kansas City Testing Laboratory.

Sincerely,

Steve Biritz
Manager of Laboratory Services

SB/jk

modified a L = 0.3 wt %

mri.sb

A member of the HIH group of companies

K.C. TESTING TEL:913-642-3679 APR 28 93 9:40 No.005 P.02

COORS ANALYTICAL LAB

LRQ # 1232-930422
Date: April 26, 1993

Requestor: Midwest Research

Sample Identification:

Silica Sand
#1: AQMD 9712M-1011
#2: AQMD 9712M-1012
#3: AQMD 9712M-1013

EPA AQMD 9712M 1011
SAND SIEVING >420um
ABRASIVE STUDY

EPA AQMD 9712M 1012
SAND SIEVING 149-420um
ABRASIVE STUDY

EPA AQMD 9712M 1013
SAND SIEVING 75-149um
ABRASIVE STUDY

Request:

Determine the concentration of Be, Cr, Mn, Fe, Ni, Co, As, Se, Cd, Sb, and Pb in three silica sand samples with the VG PlasmaQuad inductively coupled plasma - mass spectrometer(ICP-MS).

Test Method:

CAL SOP #IICPMS3001 was used with the following additions and modifications: The sample was weighed in a platinum dish, added hydrofluoric acid and fumed off silica on a hot plate. Rinsed the inside of platinum dish with 1:1 Ultrex HCl acid and took it to the dryness. Rinsed the inside of platinum dish with trebly deionized(TDI) water, added 5 ml of Ultrex nitric acid and heated on a hot plate. Cooled, transferred into a 100 ml volumetric flask and brought to the volume with TDI water and analyzed by ICP-MS.

100 ug/l In, Y and Tm were used as internal standards.

Test Results (in units of ug/g):

Element	AQMD 9712M-1011	AQMD 9712M-1012	AQMD 9712M-1013
Be	<1	<1	<1
Cr	2.4	0.65	3.0
Mn	1.5	1.3	20
Fe	130	100	1310
Ni	2.0	0.80	8.7
Co	<0.5	<0.5	<0.5
As	<1	<1	<1
Se	2.5	2.7	4.3
Cd	<1	<1	<1
Sb	<1	<1	<1
Pb	4.4	0.45	2.9

Analyst: J. Park **Notebook: #1520, P69**

Witness: **Approval: Tim Osbourn**

MIDWEST RESEARCH INSTITUTE

Run No. 4-6-93
MRI Project No. 9112-51-00

Silt and Moisture Analysis*

Recorded by DG

Material: Virgin Sand

Sample No: Composite of 4-6-93

Total Sample Weight: ~~2446.4~~ 3000, gm
(Excl. Container)
Number of Splits: 6

Oven Temperature 105 °C
Date In 4-20-93 Date Out 4-20-93
Time In 0845 Time Out 1400
Drying Time 4 hr 15 min
Split Sample Balance:
Make Ohaus
Capacity 4100g
Smallest Division 0.1g

Split Sample Weight (before drying)
Pan + Sample: 547.6
Pan: 162.5
Wet Sample: 385.1

Material Weight (after drying)
Pan + Material: 547.4
Pan: 162.5
Dry Sample: 384.9

MOISTURE CONTENT:
(A) Wet Sample Wt. 385.1
(B) Dry Sample Wt. 384.9
(C) Difference Wt. 0.2

$\frac{C \times 100}{A}$ = 0.005 % Moisture

Sieving

Time: Start:	Weight (Pan Only)
Initial (Tare):	364.2
20 min:	364.2
30 min:	
40 min:	

SIZE DISTRIBUTION

Screen	Tare Weight (Screen)	Final Weight (Screen + Sample)	Net Weight (Sample)	%
3/8 in.				
4 mesh				
10 mesh				
20 mesh				
40 mesh	399.6	620.9	221.3	57.5
100 mesh	344.7	507.1	162.4	42.2
140 mesh	NA	~~507.1~~ NA 4-20-93	NA	
200 mesh	355.1	356.3	1.2	0.3
Pan	364.2	364.2	Trace	

Net Weight <20 mesh: 384.9
Net Weight <200 mesh:

% Silt: = $\frac{\text{Net Weight} < 200 \text{ Mesh}}{\text{Total Net Weight}}$ X 100 = _____ X 100 = _____ %

*Indicate Units with all Weights

4/78

RESULTS OF SURFACE ANALYSES BY
ENERGY DISPERSIVE X-RAY SPECTROSCOPY AND ASTM G 12-83

Specimen No.	Image No.	Specimen ID	Elements as shown by EDAX										Surface film thickness (mils)[b]
			O	C	P[a]	AL	Si[a]	K	Ca[a]	Fe	Ti	Cr	
			Oxygen	Carbon	Phosph.	Aluminum	Silicon	Potassium	Calcium	Iron	Titanium	Chromium	
1	1	red			X		X		X	X	X		1.8–2.0
	2	red				X	X		X	X			
	3[c]	red	X				X						
2	4	rusty	X		X					X			None detected
3	5	blasted					X			X	X		N/A
4	6	light blue		X	X	X	X	X		X	X		5–6
5	7	yellow	X	X	X	X	X			X	X		2.8–3.0
	8[d]	yellow	X		X		X			X	X		
6	9	dark blue			X	X	X			X			2.8–3.0
7	10[e]	black			X		X		X	X		X[e]	0.8–1.0
8	11[f]	coating 1	X			X							None detected
	12[f]	coating 1	X	X	X	X	X		X	X	X		
9	13	coating 2	X		X	X	X	X	X	X			None detected

[a] Phosphorus, calcium, and silicon are common elements in dust.
[b] Determined using ASTM G 12-83 magnetic method. 1 mil = 0.001 inch = 0.0254 mm.
[c] An image of the coating edge.
[d] An area where most of the paint was missing.
[e] Source of chromium may have been the sampling tools, i.e., pliers.
[f] Coating 1 and coating 2 are two chips from the same coating specimen.

APPENDIX G

QA REVIEW

QUALITY ASSURANCE REVIEW

Field System Audit

The sandblasting runs conducted in the morning at the Deramus Field Station were audited by C. Green on 04/04/93 against the plan. Operations were discussed with S. Schliesser, G. Cooper, and M. Whitacre.

The work appeared to be professionally handled, with staff efficiently working and documenting their work. No obvious compliance or quality related problems were detected; however, one possible problem with sandblasting mass balance accuracy was noted.

Modifications to the plan, a summary of field operations, and future audit plans are described below.

Modifications. The modifications to the sampling portion of the plan are listed below. Some of the modifications were attributed to budget and schedule restraints. One modification (i.e., aides to spent abrasive recovery) may slightly affect the quality of the results. The work had to be completed by the end of April; however, the high humidity caused by the severe rainfall in April had prevented several days of testing.

1. Aides to spent abrasive recovery. The wind tunnel was not lined with heavy plastic sheeting because the plastic sheeting would be torn from sandblasting and would complicate, and not aide, recovery of spent abrasive. Also, due to the quantity of abrasive collected, a broom was used to recover spent abrasive in place of a vacuum. According to G. Cooper, in at least one case, a 100% mass balance of the spent abrasive was calculated. Because the original weight is assumed to be the same as the manufacturer's estimated weight, the accuracy of recovery may be about the same as the accuracy of the original weight.

2. Number/types of tests. Two duplicate sampling tests, not three single tests, were used. This modification was made primarily to complete the tests in time and was approved by the EPA Work Assignment Manager.

   This modification will provide sampling precision attributed to differences between the two sets of samplers and the particulate flux over the width of the wind tunnel.

3. Type of abrasive. Only high grade silica sand, not steel shot and slag, were used and thus only 24 runs, not 69, were expected. Steel shot and slag were stated in the plan to have been provisional options. Because of budget limitations, EPA decided not to conduct these tests.

Summary of Field Operations. The actual sampling operations were not described in detail in the plan, but are detailed in the report. The operations, as understood by the auditor, are summarized below.

A professional sandblasting consultant with 30 years' experience trained MRI staff and established typical operating conditions.

Compressed air was used to propel the silica sand onto the test metal surfaces in a low-speed wind tunnel. Only one setting was used for the compressor; the air flow measurements, which vary during the run, were recorded. The sand was loaded from bags into a hopper. The weight stated on the sandbags was used as the original weight. A light was used by staff inside the monitoring van to signal the start of operations. A trained sandblaster, equipped with protective apparatus, cleaned lined-up sections of automotive hoods. The curvature of the hoods was taken into account by blasting evenly over the curve for each run.

Sandblasting was not, and could not be, completely continuous. Occasionally sand quit being transported because of a clogged line, the sandblaster stopped blasting, back flushed the air line to the hopper, then continued sandblasting. During port changes when sampling was stopped, sandblasting stopped, two new bags were used to fill the hopper, then sandblasting continued. A clock on the side of the wind tunnel kept track of the elapsed sandblasting time by recording the time the sandblasting equipment was being operated.

Two types of sampling trains were used: a modified method 5 (MM5) and an MM5-particle size distribution (PSD). The MM5 train was used for velocity, temperature, moisture, particulate matter, and metals. The MM5-PSD train was used for particle size distribution, 10 micron maximum diameter particulate matter (PM_{10}), and size-specific metals. The MM5-PSD train is the same as an MM5 except it includes an Anderson particle sizing sampler at the probe inlet.

Two sets of both sampling trains were installed on each side of the wind tunnel, at the same level. Possible collisions between the trains was avoided by always using different ports. Positioning the sample trains (traversing) during testing was conducted by two sampling staff, one for each set of trains. Traverse locations were marked on the sampling probes. The sampling times at each traverse were monitored by staff in the monitoring van. Changing of the traverse points was signaled by staff in the monitoring van every 2½ min.

Staff in the van used standard EPA Method 5 sample control consoles to monitor and adjust selected parameters of all four trains. Staff also recorded the results on standard sampling forms. These staff also used radios to communicate with personnel traversing and leak checking the trains.

Staff in the sample recovery laboratory used standard forms to document sample recovery and the required weights. An electronic pan balance was used for the weighing. Recovered samples were to also be entered on inventory forms.

Field and Particulate Analysis Records

Field and particulate analysis records were reviewed by C. Green between 04/26/93 and 04/30/93. Metals analysis records were not available at this time. Only records for runs 5, 10, 15, 20, and 25 were reviewed.

Type of Records.

The original data records listed below were received for review.

1. Sampling conditions and leak checks for MM5 and HCSS.
2. Temporal sampling data for MM5 and HCSS.
3. Recovery data for MM5 and HCSS.
4. Particulate data for MM5 and HCSS.
5. Label weights used to adjust beaker weights.
6. Wind tunnel/sand blasting data.
7. Sample box filter thermocouple calibration data.
8. Low temperature stack thermocouple calibration data.
9. Type S Pitot tube inspection data.
10. Pitot tube calibration data, from 1990.
11. Gooseneck thermocouple calibration data.

The following transferred data records were provided for review.

1. Method 5 Console calibration data.
2. Orifice bracketing worksheet.
3. Mercury barometer reading correction and aneroid barometer calibration data.
4. Input for HCSS programs.
5. Output of MM5 and HCSS programs.

Accuracy and Completeness. The calibration data were all well within the requirements. Most of the original records were legible and properly identified. However, the following types of omissions were noted for the particulate filter, beaker, and thimble weight data.

None of the records documented the type and identification code of the balance, some of the filter and beaker records were not properly dated, and none of the filter records included calibration data. All missing data are required for reconstruction of data and to help trace any quality-related problems.

For the beaker weights, labels were inadvertently attached after taring. Project personnel discovered this problem, used the average weight of twelve labels (i.e., 170 $\pm$ 2 mg) to adjust these final weights, and to prevent recurrence of the problem, prepared a Standard Operating Procedure for the tare and final weighing of beakers.

The Method 5 Console calibration data, Orifice bracketing worksheet, and Mercury barometer reading correction and aneroid barometer calibration data could not be verified for transfer accuracy because no original records were provided for review. The input and output records were checked against their original records; some of the columnar data showed data transfer errors, including delta P, delta H, stack temperature, and meter temperature. The errors were obviously due to a missing entry of only one number in a column and are not considered to be significant. These problems were pointed out to project management for review and resolution.

MIDWEST RESEARCH INSTITUTE
425 Volker Boulevard
Kansas City, MO 64110-2299
(816) 753-7600

409 12th Street SW, Suite 710
Washington, DC 20024-2125
(202) 554-3844

401 Harrison Oaks Boulevard
Cary, NC 27513-2412
(919) 677-0249

625 B Clyde Avenue
Mountain View, CA 94043-2213
(415) 694-7700

National Renewable Energy Laboratory
1617 Cole Boulevard
Golden, CO 80401-3393
(303) 231-1000