Note: This is a reference cited in *AP 42, Compilation of Air Pollutant Emission Factors, Volume I Stationary Point and Area Sources.* AP42 is located on the EPA web site at www.epa.gov/ttn/chief/ap42/

The file name refers to the reference number, the AP42 chapter and section. The file name "ref02_c01s02.pdf" would mean the reference is from AP42 chapter 1 section 2. The reference may be from a previous version of the section and no longer cited. The primary source should always be checked.

AP-42 Section 12.20
Reference
Report Sect. 4
Reference 85

NEESA 2-197 AUGUST 1992

CHROMIUM EMISSION TESTS RESULTS

BUILDING 32 PLATING FACILITY
BAAQMD AUTHORITY TO CONSTRUCT: 574
NAVAL AVIATION DEPOT, ALAMEDA

NAVAL ENERGY AND ENVIRONMENTAL SUPPORT ACTIVITY

Port Hueneme, California 93043-5014

Encl. (1)

UIC: 65885

NEESA 2-197 AUGUST 1992

CHROMIUM EMISSION TESTS RESULTS

BUILDING 32 PLATING FACILITY
BAAQMD AUTHORITY TO CONSTRUCT: 574
NAVAL AVIATION DEPOT, ALAMEDA

By:

Bryan Harre

Naval Energy And Environmental Support Activity
1001 Lyons St. Suite 1
Port Hueneme, California 93043-4340

DSN 551-3542 or Commercial (805) 982-3542

EXECUTIVE SUMMARY

The Naval Energy and Environmental Support Activity performed chromium emission tests on chrome plating and chromic acid anodizing operations, sources S3201 thru S3209, at Building 32, Naval Aviation Depot, Alameda, California. We performed the tests from the eighth through the twelfth of June, 1992.

We measured outlet emissions on lines G, L, and M, which correspond to control devices A3207, A3212 and A3213 respectively. We also measured emissions between the wet scrubber and fiber bed filter on lines G,L and M.

The table below summarizes the test results.

SUMMARY OF RESULTS

LINE	SOURCE	SAMPLE LOCATION	AVERAGE CHROMIUM EMISSION RATE (mg/hr)	AVERAGE CHROMIUM EMISSION FACTOR (mg/Amp-hr)
G	S3201, S3202	OUTLET	< 3.90	< 0.0133
L	S3203, S3204, S3205	OUTLET	3.49	0.0006
M	S3206, S3207, S3208, S3209	OUTLET	1.93	0.0005
G	S3201, S3202	MIDDLE	689.10	1.7899
L	S3203, S3204, S3205	MIDDLE	1313.40	0.2189
M	S3206, S3207, S3208, S3209	MIDDLE	821.02	0.2028

Note: Results based on Geochemical testing total chromium analysis.

Sources S3201 through S3209 comply with Bay Area Air Quality Management District's 0.015 mg/Amp-hr chromium emission limit.

TABLE OF CONTENTS

PAGE

EXECUTIVE SUMMARY i

TABLE OF CONTENTS iii

1.0 INTRODUCTION 1
2.0 BACKGROUND 1
3.0 SOURCE EMISSION TEST SCHEDULE 3
3.1 CHROMIUM EMISSION TEST PROCEDURE 4
4.0 CHAIN OF CUSTODY 5
5.0 RESULTS 7

FIGURES

1 TEST SCHEDULE 2

TABLES

1 EXHAUST LINES AND PROCESS TANKS 3
2 CHROMIUM EMISSION TEST RESULTS 8
3 CHROMIUM EMISSION TEST DATA 8

APPENDICES

A AUTHORITY TO CONSTRUCT A-1
B STACK AND VENTILATION DRAWINGS B-1
C FIELD SAMPLING DATA C-1
D LABORATORY ANALYSIS AND SAMPLE CALCULATIONS D-1
E "NOMOKIN" SAMPLING PROGRAM/EPA CONSTANTS AND EQUATIONS ... E-1
F EQUIPMENT CALIBRATION SHEETS F-1
G RESUMES OF TEST PERSONNEL G-1

1.0 INTRODUCTION

The Naval Energy and Environmental Support Activity (NEESA) performed chromium emission tests at Building 32 Plating Facility, Naval Aviation Depot (NAD), Alameda, California. We tested sources S3201 to S3209 as required by BAAQMD Authority to Construct 574. Appendix A is a copy of the Authority to Construct. We measured chromium emissions from three tank ventilation exhaust lines (G, L, and M).

2.0 BACKGROUND

NEESA performed emissions tests at this facility in april of 1991. The facility met the emission limit during those tests. The location of the existing test ports were approximately 1/2 a diameter from the nearest disturbance. In order to get a more fully developed flow profile, NEESA had stack extensions manufactured. Drawings of the stack extensions, as well as of the ventilation systems are provided in Appendix B.

3.0 SOURCE EMISSION TEST SCHEDULE

Figure 1 shows our emission test schedule. During tests where two probes were in the stack (in approximately the same plane), the minimum distance between one probe nozzle and the other probe was 5.2 inches.

Table 1 lists the hard chrome plating and chromic acid anodizing tanks ventilated by exhaust lines G, L, and M. All exhaust lines are controlled by a demister, a wet scrubber, and a fiber filter bed. Appendix B contains plating shop design drawings and schematics of each control device.

TABLE 1: EXHAUST LINES AND PROCESS TANKS

Exhaust Line - Process	Control Devices[a]	Tank Rect.	Source No.[b]	Gals	≈ Area (ft)	Contents (oz/gal)	Temp (°F)
G - Chromic Acid Anodize	A3207	G-1	S3201	2400	16 x 4	10-12 CrO3	95
		G-2	S3202	1200	8 x 4	10-12 CrO3	95
L - Hard Chrome Plate	A3212	L-1	S3203	1400	8 x 4	30-33 CrO3	140
		L-2	S3204	1400	8 x 4	30-33 CrO3	140
		L-3[c]	S3205	1500	7 x 4	30-33 CrO3	140
		L-4[c]	S3205	1500	7 x 4	30-33 CrO3	140
M - Hard Chrome Plate	A3213	M-1	S3206	700	6 x 3	30-33 CrO3	140
		M-2	S3207	700	6 x 3	30-33 CrO3	140
		M-3	S3208	700	6 x 3	30-33 CrO3	140
		M-4	S3209	700	6 x 3	30-33 CrO3	140

[a] Control system identification numbers from Authority to Construct 574.
[b] Source identification numbers from Authority to Construct 574.
[c] Tank rectifiers L-3 and L-4 are on one tank S3205 (14 x 4).

We performed two outlet tests and one midline (between the wet scrubber and the fiber filter bed) test on line G. Line G ventilates two chromic acid anodizing tanks, sources S3201 and S3202. During tests on line G, plating shop personnel placed aluminum sheets in anodizing tank G-1 and in anodizing tank G-2. The tank load data sheets in Appendix C contain descriptions of parts loaded into the tanks. During the test, tank G-2 failed to reach operating temperature because the heating element burned out. After the first load of aluminum sheets, tank G-2 was no longer included in the test because the plates placed in tank G-2 were only partially anodized. Therefore, the amps from tank G-2 were not included in the emission calculation for line G. The test length was increased by two hours to compensate for the failure of tank G-2.

We performed two outlet emission tests and two midline tests on line L. Exhaust line L ventilates three hard chrome plating tanks, sources S3203, S3204, and S3205. During the source tests, plating shop personnel plated lead anodes to generate amperage load due to a low workload.

We performed two outlet tests and two midline tests on line M. Line M pulls air from four hard chrome plating tanks, sources S3206, S3207, S3208, and S3209. During the source tests, plating shop personnel plated lead anodes to generate amperage load due to a low workload.

3.1 CHROMIUM EMISSION TEST PROCEDURE

Sampling procedures and equipment coincide with the Environmental Protection Agency (EPA) Methods 1, 2, 4, and 5 described in the Code of Federal Registrations, Volume 40, Part 60, Appendix A, of 1 July 1988 and California Air Resources Board (CARB) Method 425 (revised wet impingement method).

EPA Methods:
1: Sample and Velocity Traverses for Stationary Sources.
2: Determination of Stack Gas Velocity and Volumetric Flow Rate.
4: Determination of Moisture Content in Stack Gases.
5: Determination of Particulate Emissions From Stationary Sources.

CARB Method:
425: Determination of Total Chromium and Hexavalent Chromium Emissions From Stationary Sources.

The following comments briefly describe our test procedures and document any variations from the reference methods.

The CARB 425 sampling train is a modified EPA Method 5 train. The filter holder is unheated and is located between the third and fourth impingers. A teflon coated Pallflex T60A20 filter is used. The first and second impingers contain 0.1 N sodium hydroxide solution instead of water. The transition from the glass probe liner to the first impinger is either glass or flexible teflon tubing. We do not heat the probe.

We initially wash the sampling train at our laboratory using the following procedure. After a detergent wash, we soak all parts with 1:1 HNO_3 for a minimum of three hours, rinse with deionized water, and finally rinse with 0.1N NaOH solution. We do not analyze probe liner preparation rinses for chromium.

Two third party laboratories analyzed the samples. In general, the labs used a flame atomic absorption spectrophotometer which can detect chromium concentrations in the lower ppm range. For samples below the ppm range, Geochemical Testing used a graphite furnace, while TMA/ARLI used icp. Both of these instruments can detect chromium concentrations in the lower ppb range. For the control device outlet and midline samples, the first impinger solution, the second impinger solution, and the probe wash were combined and analyzed as one solution.

We assumed all chromium emissions to be hexavalent and analyzed the samples for total chromium.

9/15/92
C. McCLURE

NOTES

1. CHIEF OF SOURCE TEST WAS NOTIFIED
2. STANDARD CONDITIONS OF 29.92" Hg at 528°R
3. TIGHT TEST.
4. EMISSIONS SATISFACTORY

TEST DEMONSTRATES COMPLIANCE W/ PERMIT CONDITIONS.

DEPARTMENT OF THE NAVY
NAVAL AVIATION DEPOT
NAVAL AIR STATION
ALAMEDA, CALIFORNIA 94501-5021

IN REPLY REFER TO

5090
Ser 610/2178
SEP 02 1992

Mr. Julian Elliot
Bay Area Air Quality Management District
Permit Services Division
939 Ellis Street
San Francisco, Ca 94109

Dear Mr. Elliot:

Enclosure (1) is a copy of the Naval Energy and Environmental Support Activity Report 2-197 of August 1992 giving the chromium emissions test results for chrome anodizing and plating tank lines G, L, and, M in Building 32. The emission tests were performed by the Naval Energy and Environmental Support Activity in June 1992 in compliance with the Bay Area Air Quality Management District permit condition Item 11 for the Plating Shop in Building 32. The report shows that the hexavalent chrome emissions from tanks S3201 through S3209 in lines G, L, and M did not exceed the permitted limit of 0.015 milligrams/ampere-hour as required in permit condition Items 1, 2, and 3.

The point of contact at this Activity is J. Tuan (Code 612) at (510) 263-6293.

Sincerely,

P. E. Pentony

P. E. PENTONY
Head, Environmental
Engineering Division
By direction of the
Commanding Officer

Encl:
(1) Report NEESA 2-197

Copy to:
Mr. Scott Lutz
BAAQMD
Permit Services Division

Ms. Nora Lew/Mr. Chuck McClure
BAAQMD
Enforcement Division

RECEIVED

1992 SEP -8 PM 1:15

BAY AREA AIR QUALITY
MANAGEMENT DISTRICT

4.0 CHAIN OF CUSTODY

LINES G, L, M

Sample Collection: Newton, Harre, Saunders, Yee, Petrie, Comstock
Tank Load Data: Yee
Sample Recovery: Newton, Yee
Sample Transport: Harre, Saunders

Sample Analysis: Ernie Vasquez
Thermo Analytical Inc.
160 Taylor
Monrovia, CA 91016
(818) 357-3247

Forrest Walker
Geochemical Testing
RD#2 Box 124
Somerset, PA 15501
(814) 443-1671

THIS PAGE INTENTIONALLY LEFT BLANK

5.0 RESULTS

Table 1 (section 3.0) lists chromium process data for each exhaust line. Table 2 shows chromium emission test results. Table 3 displays other emission test data. The test results presented in Table 2 are based on total chromium analysis performed by Geochemical Testing Laboratory in Somerset, Pennsylvania. We had all emission test samples analyzed by two laboratories.

The first lab, TMA/ARLI in Monrovia California, had suspicious results concerning the amount of chrome in the NaOH blank, in M-out-1, and also had a high detection limit of .007 mg/l. The NaOH blank was reagent grade, and should not have had so high a concentration of chrome. In fact, according to their results, it had a higher concentration of chrome than outlet tests G-out-1 and G-out-2. We expected the result for M-out-1 to be comparable to M-out-2 because the tests were performed simultaneously. Also, the results from M-out-1 should have been comparable to L-out-1, and L-out-2 because the processes and the process conditions were similar. Instead of being similar to the other tests, M-out-1 was off by an order of 10. TMA/ARLI reanalyzed M-out-1 and obtained the same result. Another problem with TMA/ARLI was the high detection limit 0.007 mg/l. This detection limit would not show compliance for line G.

We suspect that TMA/ARLI mixed up the samples during preparation. Fortunately, before we delivered the samples to TMA/ARLI we took 50 ml back up aliquots of each source test sample. After TMA/ARLI's results were determined to be unreliable a second lab, Geochemical Testing, was contracted to do the analysis of the back up aliquots. Geochemical Testing appears to have more reliable results with a detection limit of 0.002 mg/l. Appendix D contains laboratory analysis results for all emission test samples, ampere-hour calculation sheets, and sample calculations.

The results are the same as the April 1991 test. The higher numbers for line G are due to the low amps produced during the source test and the higher detection limit of the lab. With the efficiency of the Ceco fiber filter bed (approximately 99.7%), it is very difficult to detect chrome at the outlet.

Appendix E lists our HP-41C calculator program "Nomokin" used instead of a nomograph to detemine isokinetic sampling prarmeters during tesing. Appendix F contains equipment calibration sheets. Appendix G contains resumes of NEESA test personnel.

TABLE 2: CHROMIUM EMISSION TEST RESULTS

TEST	CHROMIUM SAMPLE WEIGHT (mg)	AIR SAMPLE VOLUME (m3)	CHROMIUM EMISSION RATE (mg/hr)	AVERAGE AMPERES (Amp)	CHROMIUM EMISSION FACTOR (mg/Amp-hr)	BAAQMD SOURCE IDENTIFICATION
G-OUT-1	< 0.00065	8.168	< 3.677	295	< 0.0125	S3201,S3202
G-OUT-2	< 0.00075	8.358	< 4.136	295	< 0.0140	"
AVERAGE			< 3.907		< 0.0133	
G-MID-1	0.04843	3.229	689.102	385	1.7899	
L-OUT-1	0.00068	11.824	2.610	6000	0.0004	S3203 THRU S3205
L-OUT-2	0.00116	11.842	4.360	6000	0.0007	"
AVERAGE			3.485		0.0006	
L-MID-1	VOID					
L-MID-2	0.08075	2.833	1313.402	6000	0.2189	"
M-OUT-1	0.00082	11.129	2.050	4050	0.0005	S3206 THRU S3209
M-OUT-2	0.00071	11.182	1.800	4050	0.0004	"
AVERAGE			1.925		0.0005	
M-MID-1	0.08303	2.598	896.120	4050	0.2213	"
M-MID-2	0.06982	2.706	745.910	4050	0.1842	"
AVERAGE			821.015		0.2028	

Note: Results based on Geochemical Testing total chrome analysis.

TABLE 3: CHROMIUM EMISSION TEST DATA

TEST	SOURCES	NOZZLE DIA. (in.)	SAMPLE TIME (min.)	AIR SAMPLE VOLUME (dscf)	% H2O (%)	STACK FLOW (dscfm)	STACK VELOCITY (fpm)	ISO (%)
G-OUT-1	S3201-2	0.264	360	288.42	1.5	27237	2240	97.3
G-OUT-2	"	0.264	360	295.13	1.5	27197	2232	99.7
G-MID-1	"	0.250	120	114.03	1.4	27045	2881	99.2
L-OUT-1	S3203-5	0.273	480	417.50	1.9	26872	2184	100.2
L-OUT-2	"	0.277	480	418.14	1.9	26136	2122	100.2
L-MID-1	"	0.233	120	134.30	1.9	26748	2818	136.0
L-MID-2	"	0.233	120	100.04	1.9	27119	2860	99.9
M-OUT-1	S3206-9	0.264	432	392.99	1.9	16429	2378	102.6
M-OUT-2	"	0.264	432	394.84	1.9	16745	2419	101.6
M-MID-1	"	0.233	120	91.73	1.9	16500	2652	98.7
M-MID-2	"	0.233	120	95.57	1.8	17016	2762	99.7

APPENDIX A

AUTHORITY TO CONSTRUCT

BAY AREA AIR QUALITY MANAGEMENT DISTRICT

ALAMEDA COUNTY
Edward R. Campbell
Shirley J. Campbell
(Chairperson)
Chuck Corica
Frank H. Ogawa
CONTRA COSTA COUNTY
Paul L. Cooper
(Secretary)
Sunne Wright McPeak
MARIN COUNTY
Al Aramburu
NAPA COUNTY
Bob White
SAN FRANCISCO COUNTY
Harry G. Britt
Jim Gonzalez
SAN MATEO COUNTY
Gus J. Nicolopulos
Anna Eshoo
SANTA CLARA COUNTY
Martha Clevenger
Rod Diridon
Roberta H. Hughan
Susanne Wilson
SOLANO COUNTY
Osby Davis
(Vice Chairperson)
SONOMA COUNTY
Jim Harberson

January 4, 1990

Commander, Western Division
Naval Facilities Engineering Command
P.O. Box 727
San Bruno, CA 94066-0720

Attention: Ron Sommer, Code 1824RS

Application Number: 574
Equipment Location: NAS, Alameda

Gentlemen:

This is your Authority to Construct the following:

S3201	Chrome Anodizing Tank (G1), 2400 gal., 2000 amperes, Bldg 32, abated by A3207, Scrubber/Fiber Filter System, Viron, 23,976 CFM;
S3202	Chrome Anodizing Tank (G2), 1200 gal., 1500 amperes, Bldg 32, abated by A3207, Scrubber/Fiber Filter System, Viron, 23,976 CFM;
S3203	Chrome Plating Tank (L1), 1400 gal., 5000 amperes, Bldg 32, abated by A3212, Scrubber/Fiber Filter System, Viron, 24,785 CFM;
S3204	Chrome Plating Tank (L2), 1400 gal., 5000 amperes, Bldg 32, abated by A3212, Scrubber/Fiber Filter System, Viron, 24,785 CFM;
S3205	Chrome Plating Tank (L3/4), 1500 gal., 5000 amperes, Bldg 32, abated by A3212, Scrubber/Fiber Filter System, Viron, 24,785 CFM;
S3206	Chrome Plating Tank (M1), 700 gal., 2500 amperes, Bldg 32, abated by A3213, Scrubber/Fiber Filter System, Viron, 14,285 CFM;
S3207	Chrome Plating Tank (M2), 700 gal., 2500 amperes, Bldg 32, abated by A3213, Scrubber/Fiber Filter System, Viron, 14,285 CFM;
S3208	Chrome Plating Tank (M3), 700 gal., 2500 amperes, Bldg 32, abated by A3213, Scrubber/Fiber Filter System, Viron, 14,285 CFM;
S3209	Chrome Plating Tank (M4), 700 gal., 2500 amperes, Bldg 32, abated by A3213, Scrubber/Fiber Filter System, Viron, 14,285 CFM;
S3210	Vapor Solvent Cleaner (H1) with freezing freeboard chiller, Bldg 32;
S3211	Vapor Solvent Cleaner (S9) with freezing freeboard chiller, Bldg 32;

Enclosure (1)

939 ELLIS STREET • SAN FRANCISCO, CALIFORNIA 94109 • (415) 771-6000

S3212 Solvent Wipe Cleaning Operations, Bldg 32;

S3221 Abrasive Blasting Glovebox, Universal ABM, PDH-DC500, Bldg 32, abated by A3221, Cyclone/Baghouse, Universal, 900 CFM;

S3222 Abrasive Blasting Glovebox, Universal ABM, PDH-DC500, Bldg 32, abated by A3222, Cyclone/Baghouse, Universal, 900 CFM;

S3223 Abrasive Blasting Glovebox, Universal ABM, PDH-DC500, Bldg 32, abated by A3223, Cyclone/Baghouse, Universal, 900 CFM;

S3224 Abrasive Blasting Glovebox, Universal ABM, PDH-DC200, Bldg 32, abated by A3224, Cyclone/Baghouse, Universal, 900 CFM;

S3225 Abrasive Blasting Glovebox, Universal ABM, PDH-DC200, Bldg 32, abated by A3225, Cyclone/Baghouse, Universal, 900 CFM.

Operation of this equipment will be subject to the specific conditions attached to this Conditional Authority to Construct.

Notification

Please notify the District by letter at least three days before the initial operation of the equipment is to take place so that we may observe the equipment in operation and verify conformance with the Authority to Construct. Operation includes any start-up of the source for testing or other purposes. Operation of equipment without prior written notification to the District or beyond the start-up period without a Permit to Operate may result in enforcement action.

Start-Up Period

After receipt of the start-up letter required above, this Authority to Construct authorizes operation during the start-up period from the date of initial operation noted in your start-up letter until the Permit to Operate is issued, up to a maximum of 60 days. All conditions (specific or implied) of the Authority to Construct are in effect during the start-up period.

Fees

District Regulation 3 requires a fee for each new Permit to Operate. You will be invoiced upon receipt of your start-up letter. No permits will be issued until all outstanding fees are paid.

Implied Conditions

In the absence of specific permit conditions to the contrary, the throughputs, fuel and material consumptions, capacities, and hours of operation described in your permit application will be considered maximum allowable limits. A new permit will be required before any increase in these parameters, or change in raw material handled, may be made.

Expiration

In accordance with Regulation 2-1-407, this Authority to Construct expires two years from the date of issuance unless substantial use of the authority has begun.

Exempt Sources

Attached is a list of sources that have been evaluated and are currently exempt from permit requirements. These sources will be entered in our files as exempt sources.

These exemptions are not permanent; a change in equipment operation or in District regulations may require permits in the future. In addition, source test data required by this Authority to Construct may initiate further permit review if significant emissions are found to occur. Please note that these exemptions only apply to permits. Equipment must be operated and maintained in compliance with any applicable District Regulation.

Correspondence

Please include your application number with any correspondence with the District regarding this matter. If you have any questions on this matter, please call Scott Lutz, Air Quality Engineer, at (415) 771-6000, exension 212.

Very truly yours,

Milton Feldstein
Air Pollution Control Officer

by
Permit Services Division

cc: Mike James, Department of Health Services

CONDITIONS OF AUTHORITY TO CONSTRUCT NO. 574

S3201-3209:

1. Chrome Anodizing Tanks, S3201 and S3202, shall not be operated unless emissions of hexavalent chromium from S3201 and S3202 are abated by A3207, Scrubber/Fiber Filter System. The ventilation and abatement systems shall be properly maintained and kept in good operating condition. Hexavalent chromium emissions from S3201 and S3202 combined shall not exceed 0.015 mg/amp-hr.

2. Chrome Plating Tanks, S3203, S3204, and S3205, shall not be operated unless emissions of hexavalent chromium from S3203-3205 are abated by A3212, Scrubber/Fiber Filter System. The ventilation and abatement systems shall be properly maintained and kept in good operating condition. Hexavalent chromium emissions from S3203, S3204, and S3205 combined shall not exceed 0.015 mg/amp-hr.

3. Chrome Plating Tanks, S3206, S3207, S3208, and S3209, shall not be operated unless emissions of hexavalent chromium from S3206-3209 are abated by A3213, Scrubber/Fiber Filter System. The ventilation and abatement systems shall be properly maintained and kept in good operating condition. Hexavalent chromium emissions from S3206, S3207, S3208, and S3209 combined shall not exceed 0.015 mg/amp-hr.

4. Naval Aviation Depot, Alameda shall submit an operations and maintenance plan to the Permit Services Division within 90 days of full operation or within 180 days of start-up of the plating lines (S3201-3209). This plan shall be subject to District approval and shall include items to regularly monitor such as water circulation rates or water flushing intervals for demisters, scrubbers, and fiber filters; scrubber bleed water quality; differential pressure across components of the abatement systems; and a schedule of replacement for critical components such as the fiber filter elements or criteria for such replacements. Vendor recommendations should be followed for operational and maintenance items. This document shall include action limits and/or alarm set-points, and plans to test appropriate parameters regularly.

5. Pressure drop across each Fiber Filter unit shall be maintained at a differential pressure not less than 6 inches w.c. and not greater than 12 inches w.c. Pressure shall be measured weekly upstream of each demister, downstream of each water scrubber, and upsteam of each fiber filter unit for each chrome abatement system (A3207, A3212, and A3213). These pressure measurements shall be recorded weekly and shall comply with the limits above or approved alternative limits stipulated in the operations and maintenance plan.

6. Chrome Plating and Anodizing Tanks, S3201-3209, shall not emit greater than 908 grams (2.0 lb) of hexavalent chromium per calendar year on a combined basis.

7. Chrome Plating and Anodizing Tanks, S3201-3209, shall not consume greater than 60,000,000 amp-hours per calendar year on a combined basis.

8. Totalizing amp-hour meters shall be installed on each of the Chrome Plating and Anodizing Tanks, S3201-3209. These amp-hour meters shall be properly maintained and kept in good operating condition . A tank shall not be operated unless its associated totalizing amp-hour meter is recording properly. Amp-hour readings shall be recorded in a process log for each plating and anodizing tank on a monthly basis. These records shall show compliance with Condition 7 above.

9. An emissions report shall be submitted to the Permit Services Division within 30 days of the end of each calendar quarter for the two years of operation and on an annual basis thereafter. These reports shall indicate the number of amp-hr/month for each tank (S3201-3209); the total number of amp-hours during the calendar year for each line; and a calculated emission rate of hexavalent chromium in grams for each month and the year-to-date emission in grams for each line. The monthly amp-hour consumption and emission factor based on the results of the most recent source test required by Conditions 10 and 11 below shall be used to calculate the mass of hexavalent chromium emitted for each line.

10. Within 60 days of the start-up of Chrome Plating and Anodizing Tanks, S3201-3209, Naval Aviation Depot, Alameda shall perform a District approved source test of these tanks and their associated abatement systems A3207, A3212, and A3213. This source test shall determine the mass emission of total and hexavalent chromium in g/hr and mg/amp-hr for each anodizing and plating line as emitted after abatement. A complete report shall be submitted to the District's Source Test Manager and Permit Services Division within 30 days of this source test and shall demonstrate compliance with Conditions 1, 2, and 3 above.

11. Naval Aviation Depot, Alameda shall perform an annual District approved source test of Chrome Plating and Anodizing Tanks, S3201-3209, and their associated abatement systems A3207, A3212, and A3213. These source tests shall determine the mass emission of total and hexavalent chromium in g/hr and mg/amp-hr for each anodizing and plating line as emitted after abatement. A complete report shall be submitted to the District's Source Test Manager and Permit Services Division within 30 days of each annual source test and shall demonstrate compliance with Conditions 1, 2, and 3 above.

12. Within 90 days of the start-up of this facility, Naval Aviation Depot, Alameda shall perform District approved source tests (tanks: C3, E4, E6, K6, K8, J11, N1-3, N6, O4, P6-8 and emission point, P3220, for fugitive cadmium plating emissions) to determine the uncontrolled emissions of the following air contaminants: chromium, cadmium, nickel, and cyanide. Tanks equiped with air agitation shall be tested with air on and without air. Cadmium plating tanks are not directly vented and occupational testing results shall be submitted with the results of the above source tests. These source tests shall be used to support the Navy's contention that uncontrolled emissions (exclusive of the chromium plating and anodizing lines) are indeed insignificant. If any emissions of air contaminants are found to be of significant quantities, Naval Aviation Depot may be required to modify their risk assessment to account for these significant emissions and to modify this facility by the addition of abatement equipment. Additional permit review shall be evaluated as if this facility had not yet been constructed and operated. A complete report shall be submitted to the District's Source Test Manager and Permit Services Division within 30 days of these source tests. This report shall also include all other compounds analyzed by the Navy that were not specifically required by this condition.

13. Naval Aviation Depot, Alameda shall receive approval from the District's Source Test Manager for installation of testing ports and source testing procedures. A written protocol shall be submitted prior to the initial source tests. The District's Source Test Manager and Permit Services Division shall be given written notification at least two weeks prior to any source test.

S3210:

1. The net solvent used at Vapor Solvent Cleaner, S3210, shall not exceed 185 gallons per calendar year. The Navy shall maintain solvent usage records that indicate all quantities of solvent added to the equipment, solvent recovered for disposal or reclamation, and net solvent usage. These records shall be summarized on a quarterly basis and on an annual basis. These records must be retained for at least two years and be available for review by the BAAQMD.

2. Whenever S3210, vapor solvent cleaner, is in operation, the refrigerant contained in the freeboard chiller shall be maintained at a temperature of less than minus 10°F (except for normal defrost periods). Naval Aviation Depot shall install and maintain a temperature indicator that demonstrates compliance with this temperature limitation.

S3211:

1. The net solvent used at Vapor Solvent Cleaner, S3211, shall not exceed 185 gallons per calendar year. The Navy shall maintain solvent usage records that indicate all quantities of solvent added to the equipment, solvent recovered for disposal or reclamation, and net solvent usage. These records shall be summarized on a quarterly basis and on an annual basis. These records must be retained for at least two years and be available for review by the BAAQMD.

2. Whenever S3211, vapor solvent cleaner, is in operation, the refrigerant contained in the freeboard chiller shall be maintained at a temperature of less than minus 10°F (except for normal defrost periods). Naval Aviation Depot shall install and maintain a temperature indicator that demonstrates compliance with this temperature limitation.

S3212: The net solvent used at Solvent Wipe Cleaning Operation, S3212, shall not exceed 410 gallons of Non-Precursor Organic Compounds (NPOC) and 30 gallons of Precursor Organic Compounds (POC) per calendar year. The Navy shall maintain solvent usage records that indicate all quantities of solvent used at the equipment, solvent recovered for disposal or reclamation, and net solvent usage. These records shall be summarized on a quarterly basis and on an annual basis. These records must be retained for at least two years and be available for review by the BAAQMD.

S3221: Abrasive Blasting Glovebox, S3221, shall not be operated unless emissions of particulate matter from S3221 are abated by A3221, Dust Filtration System. This abatement equipment shall be properly maintained and kept in good operating condition at all times.

S3222: Abrasive Blasting Glovebox, S3222, shall not be operated unless emissions of particulate matter from S3222 are abated by A3222, Dust Filtration System. This abatement equipment shall be properly maintained and kept in good operating condition at all times.

S3223: Abrasive Blasting Glovebox, S3223, shall not be operated unless emissions of particulate matter from S3223 are abated by A3223, Dust Filtration System. This abatement equipment shall be properly maintained and kept in good operating condition at all times.

S3224: Abrasive Blasting Glovebox, S3224, shall not be operated unless emissions of particulate matter from S3224 are abated by A3224, Dust Filtration System. This abatement equipment shall be properly maintained and kept in good operating condition at all times.

S3225: Abrasive Blasting Glovebox, S3225, shall not be operated unless emissions of particulate matter from S3225 are abated by A3225, Dust Filtration System. This abatement equipment shall be properly maintained and kept in good operating condition at all times.

EXEMPT SOURCES, APPLICATION 574:

Based on the data submitted in this application, the following sources are currently exempt from permit requirements in accordance with the indicated Regulation:

S3231 Anodic Strip Tank (C1), air agitated, 600 gal., 12.5% CrO_3/6% H_3PO_4, Bldg 32 (exempt per Reg. 2-1-127.3);

S3232 Chromic Pickle Tank (E4), air agitated, 400 gal., 19% CrO_3, Bldg 32 (exempt per Reg. 2-1-118.5);

S3233 Magnesium Conversion Coating Tank (E6), air agitated, 600 gal., Dow 7 (19% $Na_2Cr_2O_7$), Bldg 32 (exempt per Reg. 2-1-118.5, 2-1-119.2.2);

S3234 Aluminum Conversion Coating Tank (F4), air agitated, 800 gal., Iridite (1% CrO_3), Bldg 32 (exempt per Reg. 2-1-118.5, 2-1-119.2.2);

S3235 Chromic Acid Oxidizing Tank (J4), 250 gal., Bldg 32 (exempt per Reg. 2-1-118.5, 2-1-119.2.2);

S3236 Cadmium Conversion Coating Tank (Q3), 300 gal., 1% $Na_2Cr_2O_7$, Bldg 32 (exempt per Reg. 2-1-118.5, 2-1-119.2.2);

S3237 Miscellaneous Cleaning and Activation tanks (K1, K3, & K4), Bldg 32, abated by A3211, Water Scrubber, Viron, 13,376 CFM (exempt per Reg. 2-1-118.5);

S3238 Stainless Steel Passivate Tank (K6), 21% HNO_3/2% $Na_2Cr_2O_7$, Bldg 32, abated by A3211, Water Scrubber, Viron, 13,376 CFM (exempt per Reg. 2-1-118.5);

S3239 Copper Bright Dip Tank (K8), 20% CrO_3, Bldg 32, abated by A3211, Water Scrubber, Viron, 13,376 CFM (exempt per Reg. 2-1-118.5);

S3240 Cadmium Plating Tanks (T3 and T4), 3% Cadmium/14% NaCN/2.5% NaOH, Bldg 32 (exempt per Reg. 2-1-127.3);

S3241 Nickel Acetate Tank (J11), air agitated, 600 gal., Bldg 32 (exempt per Reg. 2-1-118.5);

S3242 Nickel Sulfamate Plating Tanks (N1, N2, N3, N6, O6, O7, & S7), air agitated, 34% Nickel Sulfamate, Bldg 32 (exempt per Reg. 2-1-127.3);

S3243 Electroless Nickel Plating Tanks (P6, P7, & P8), 2% Nickel Sulfamate, Bldg 32 (exempt per Reg. 2-1-127.3);

S3244 Nickel Strike Tanks (O4, P4, & R4), 25% $NiCl_2$, Bldg 32 (exempt per Reg. 2-1-118.5);

S3245 Copper, Tin, and Silver Plating Tanks, (R6, R8, U2, & U3), Bldg 32 (exempt per Reg. 2-1-127.3);

S3246 Caustic Electroclean and Stripping Tanks (B1, B3, & B4), Bldg 32, abated by A3202, Water Scrubber, Viron, 11,368 CFM (exempt per Reg. 2-1-118.5, 2-1-127.3);

S3247 Alkaline Electroclean and Acid Etching Tanks (D1, & D3-7), Bldg 32, abated by A3204, Water Scrubber, Viron, 29,096 CFM (exempt per Reg. 2-1-118.5, 2-1-127.4);

S3248 Sulfuric Acid Anodizing and Dye Tanks (I1-8), Bldg 32, abated by A3209, Water Scrubber, Viron, 14,970 CFM (exempt per Reg. 2-1-119.2.2);

S3249 Oil Dip Tanks, (A8 & J6), Bldg 32 (exempt per Reg. 2-1-119.4);

S3250 Miscellaneous Etching and Stripping Tanks (A1, A3, C3, C5, C7, O3, P3, Q1, R3, S3, S5, U6, U8, & U9), Bldg 32 (exempt per Reg. 2-1-127.3 & 4);

S3251 Miscellaneous Cleaning and Surface Preparation Tanks (E1, F1, H2, H5, J2, J8, O1, P1, R1, S1, T5, T7, & U1) Bldg 32 (exempt per Reg. 2-1-118.5);

S3252 Space Heater (MU1), 3.75 MMBtu/hr, Natural Gas, Bldg 32 (exempt per Reg. 2-1-114.2);

S3253 Space Heater (MU2), 3.75 MMBtu/hr, Natural Gas, Bldg 32 (exempt per Reg. 2-1-114.2);

S3254 Space Heater (MU3), 3.75 MMBtu/hr, Natural Gas, Bldg 32 (exempt per Reg. 2-1-114.2);

S3255 Space Heater (MU4), 3.75 MMBtu/hr, Natural Gas, Bldg 32 (exempt per Reg. 2-1-114.2);

S3256 Space Heater (MU5), 0.8 MMBtu/hr, Natural Gas, Bldg 32 (exempt per Reg. 2-1-114.2);

S3257 Space Heater (UH1), 0.1 MMBtu/hr, Natural Gas, Bldg 32 (exempt per Reg. 2-1-114.2);

S3258 Space Heater (FUR1), 0.1 MMBtu/hr, Natural Gas, Bldg 32 (exempt per Reg. 2-1-114.2);

S3259 Heat Treat Ovens, Electric, Five Units (OV1-5), Bldg 32 (exempt per Reg. 2-1-116.3);

S3260 Plastic Dip Tanks, (TWX1 & TWX2), Bldg 32 (exempt per Reg. 2-1-119.4).

APPENDIX B

STACK AND VENTILATION DRAWINGS

Stack Extensions

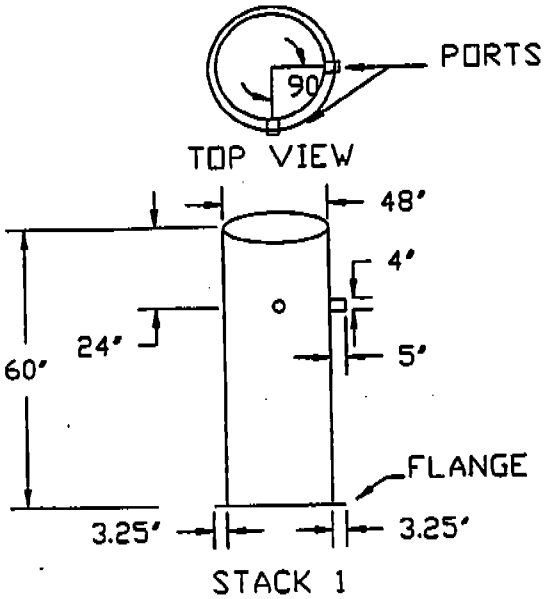

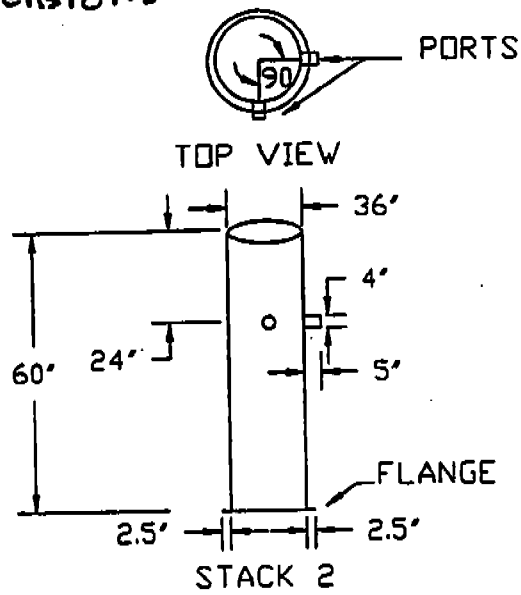

STACK MUST BE LIGHT WEIGHT AND CONSTRUCTED OF THIN SHEET METAL

SAMPLING PORTS TO BE FLUSHED WITH THE INSIDE OF THE STACK

WEIGHT NOT TO EXCEED 80 LBS

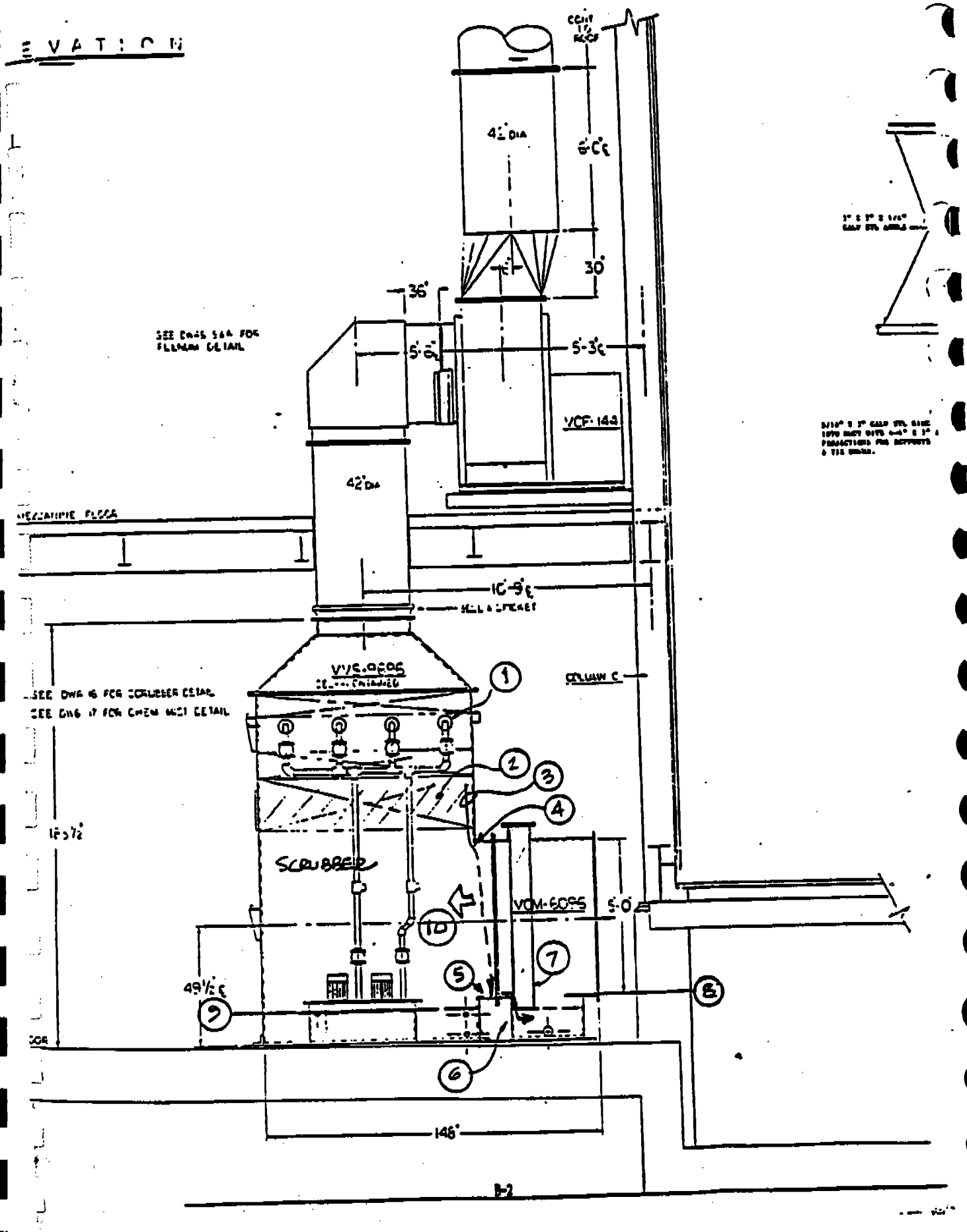
ELEVATION
42" DIA
6'-0"℄
30"
36"
5'-6"
5'-3"℄
VCF-144
42" DIA
10'-9"℄
SCRUBBER
VCM-6005
5'-0"
49½"℄
146"
1
2
3
4
5
6
7
8
9
10

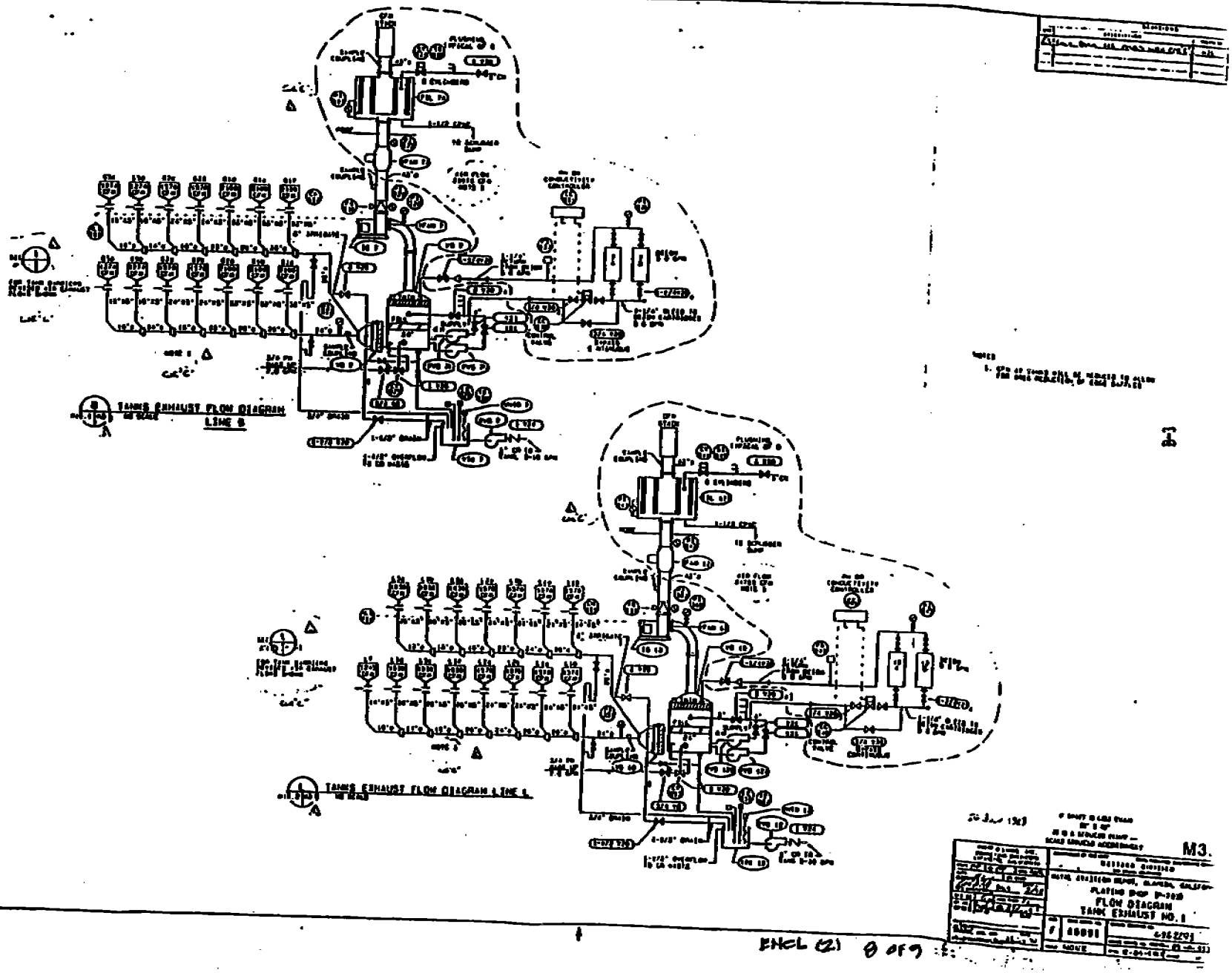
TANKS EXHAUST FLOW DIAGRAM
LINE 8
TANKS EXHAUST FLOW DIAGRAM LINE 9
M3.
PLATING SHOP P-200
FLOW DIAGRAM
TANK EXHAUST NO. 1

ENCL (2) 8 of 9

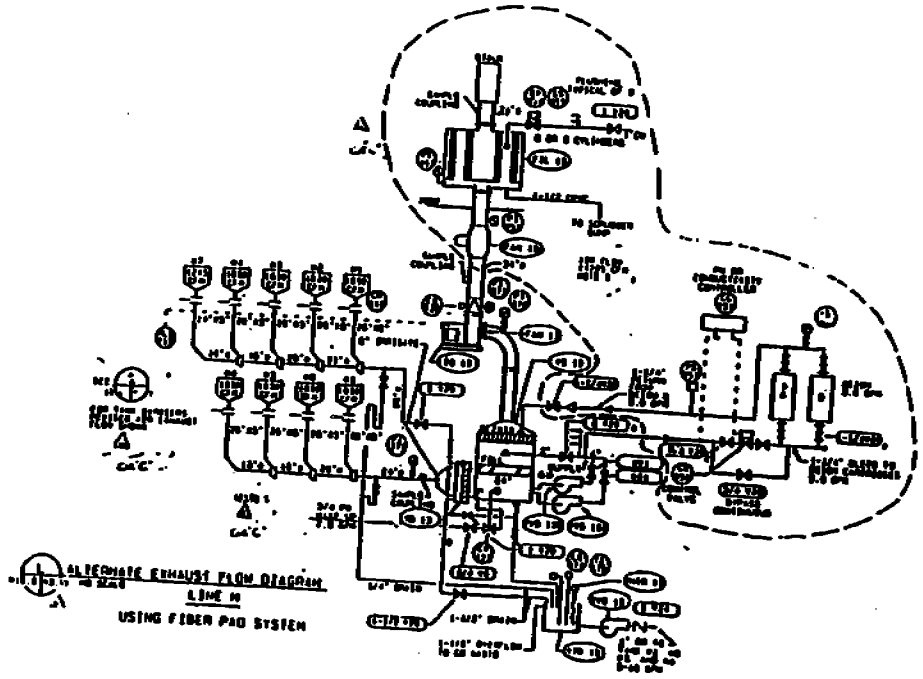

ALTERNATE EXHAUST FLOW DIAGRAM
LINE H
USING FIBER PAD SYSTEM

M3.1

PLATING SHOP P-10B
FLOW DIAGRAM
TANK EXHAUST NO. 3

ENCL (2) 9 OF 9

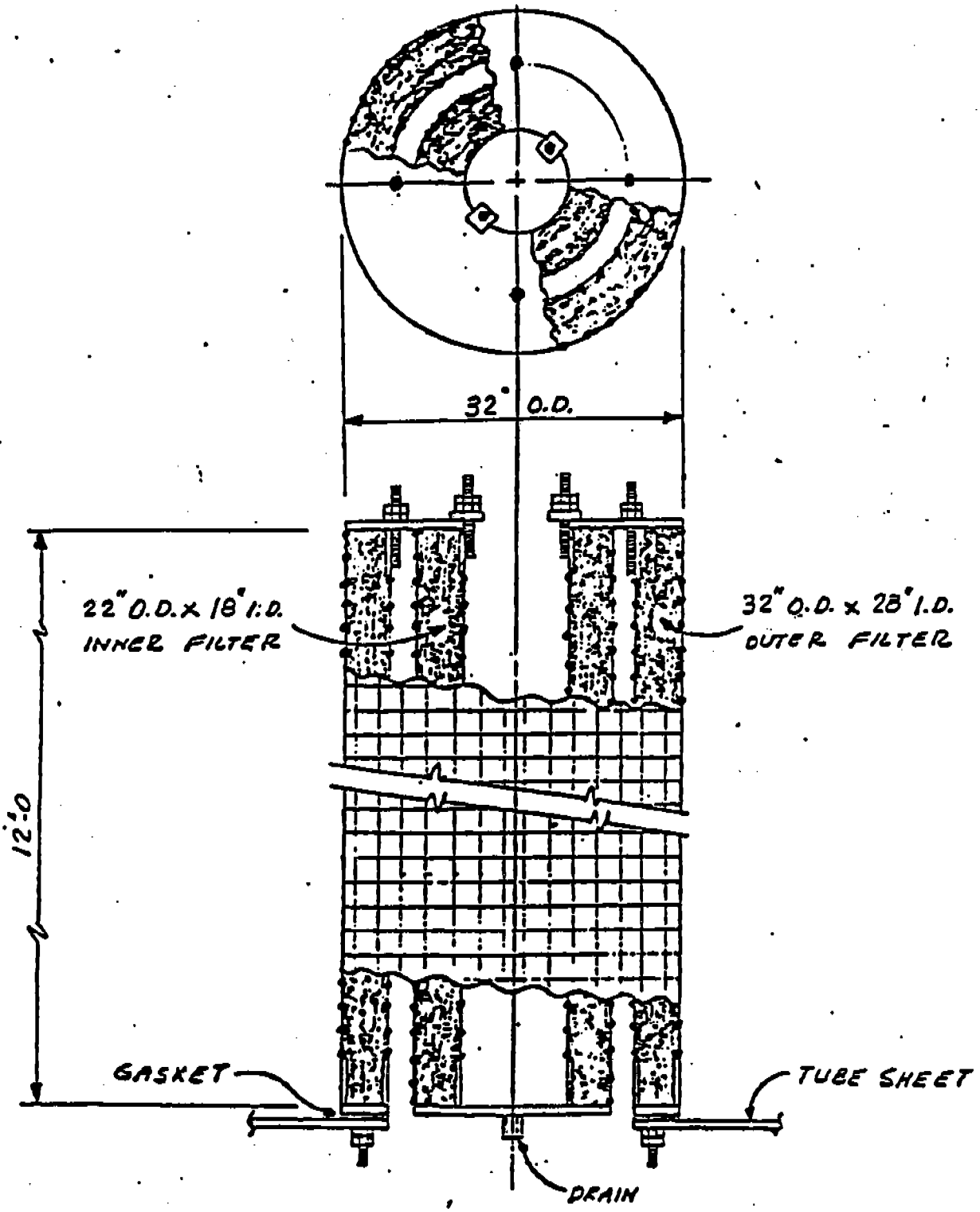

"TWIN-PAK" FILTER ASSEMBLY (PATENT PENDIN

MARELICH MECHANICAL CO, INC.-SAN FRANCISCO, CA

CECO FILTERS, INC.	CECO JOB NO. C020-02120	REV. 0	DWG NO

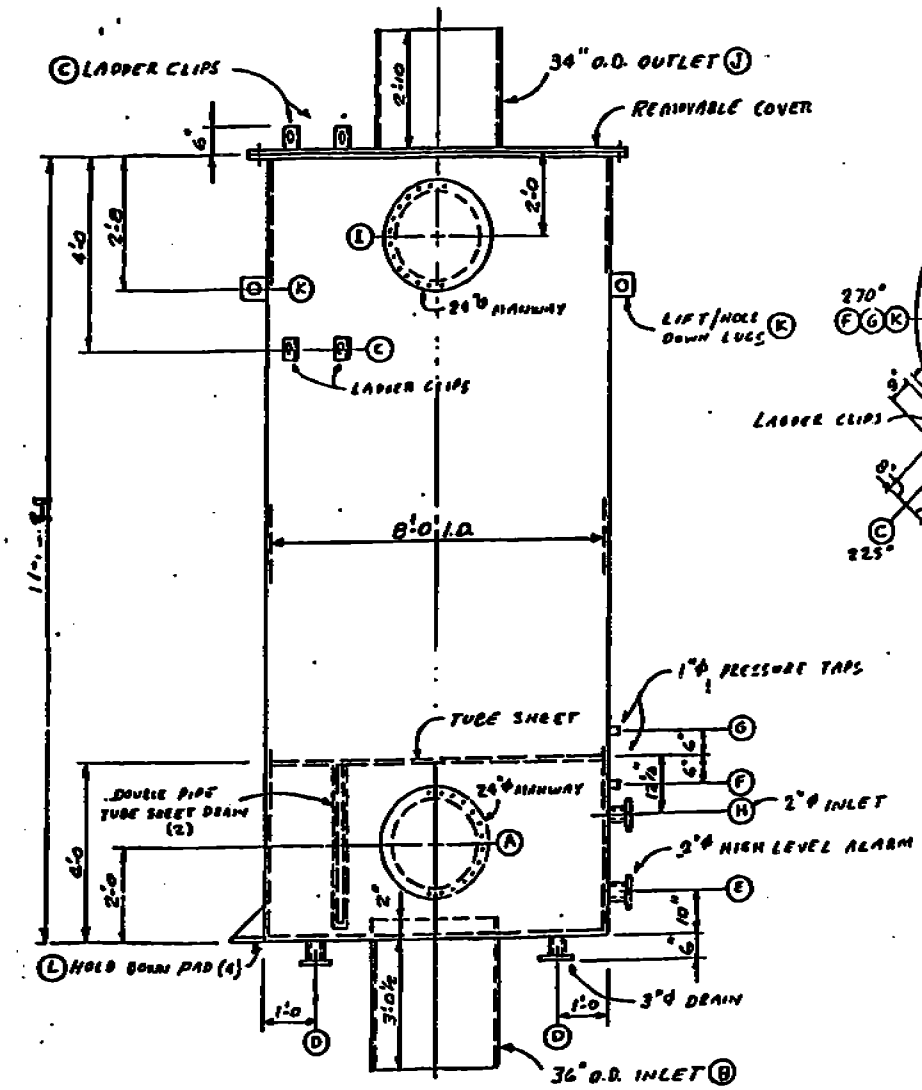

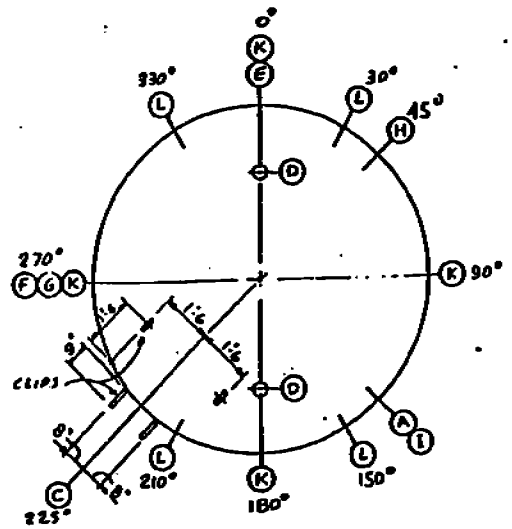

ORIENTATION PLAN

SEE DWG C-1198-S FOR SPECIFICATIONS

CECO FILTERS, INC.
CONSHOHOCKEN, PA

CECO JOB NO. C020-02120

MARELICH MECHANICAL CO, INC
SAN FRANCISCO, CA

P.O. NO.

F.IL13A FILTER UNIT

BY: EWM	DRAWING NO.	DATE
SCALE:	C-1198-1	5-15-90

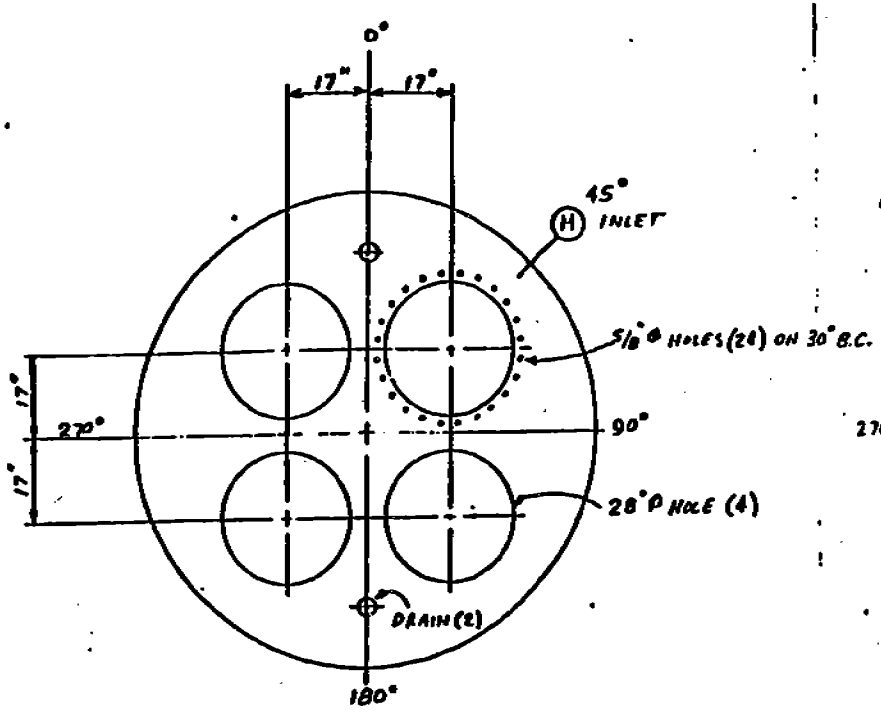

8'-0 Φ TUBE SHEET LAYOUT
(FIL13A FILTER UNIT)

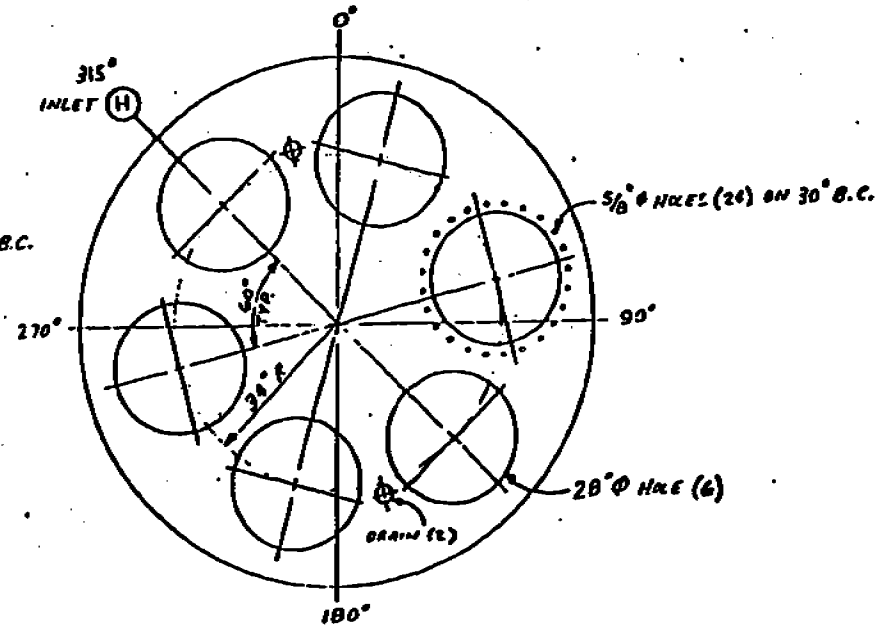

9'-0 Φ TUBE SHEET LAYOUT
(FIL7A & FIL12A FILTER UNITS)

CECO FILTERS, INC.
CONSHOHOCKEN, PA

CECO JOB NO. C020-02120

MARELICH MECHANICAL CO, IN
SAN FRANCISCO, CA

P.O. NO.

TUBE SHEET LAYOUT

BY: EWH	DRAWING NO.	DATE
SCALE:	C-1198-2	3-19-90

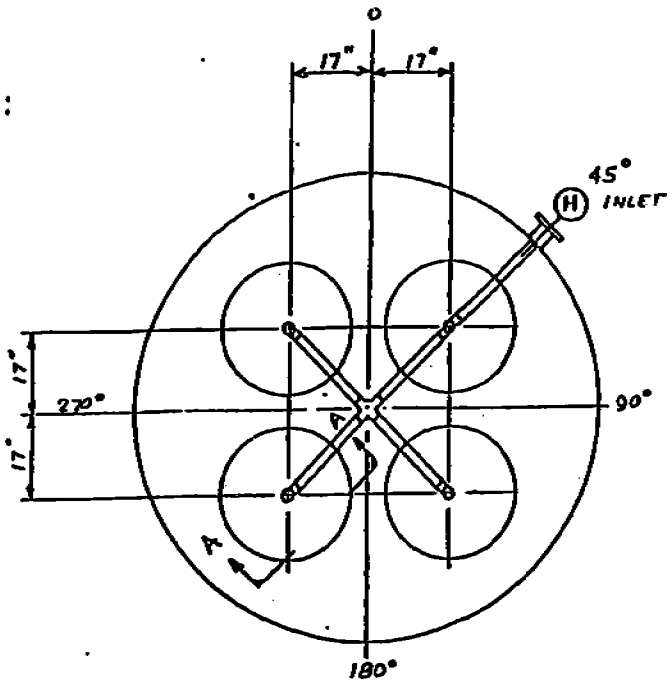

SPRAY NOZZLE LAYOUT
(FIL13A FILTER UNIT)

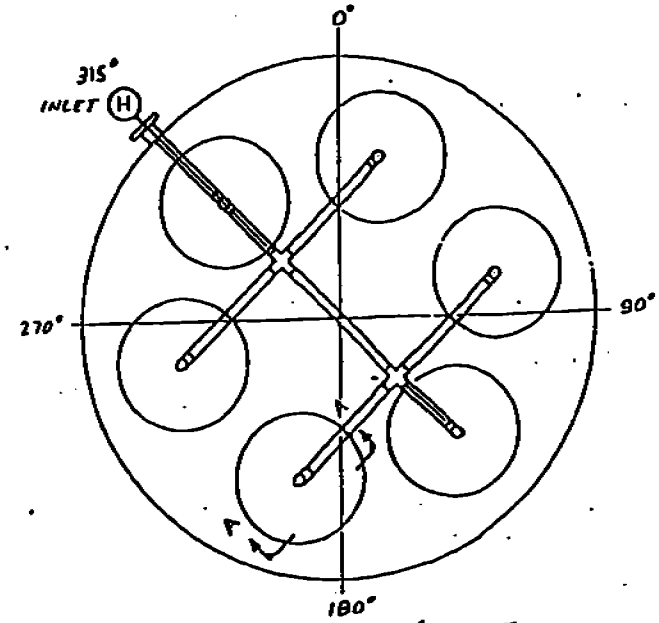

SPRAY NOZZLE LAYOUT
(FIL7A & FIL12A FILTER UNITS)

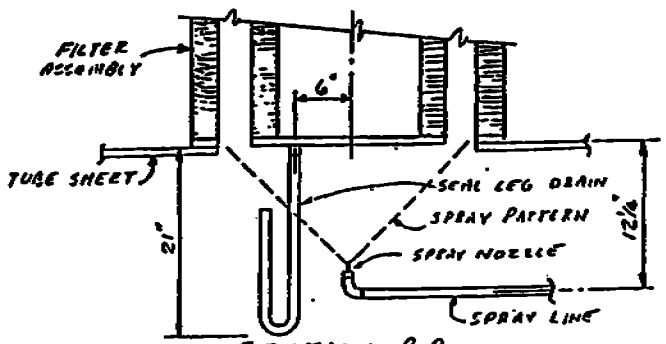

SECTION A-A.

SEE DWG C-1198-5 FOR SPECIFICATIONS

CECO FILTERS, INC.
CONSHOHOCKEN, PA

CECO JOB NO. C020-02120

MARELICH MECHANICAL CO, INC
SAN FRANCISCO, CA

P.O. NO.

SPRAY NOZZLE LAYOUT

BY: EWM	DRAWING NO.	DATE	R
SCALE:	C-1198-4	5-15-90	(

APPENDIX C

FIELD SAMPLING DATA

SIX03 1/16

TANK LOAD DATA SHEET

DATE: 10 June 92

TEST RUN NO: _____

TEST RUN NO: _____

TEST RUN NO: _____

TEST RUN NO: _____

TEST RUN NO: _____

TEST RUN NO: _____

large 60"x43"x 1/16
small 48"x24"x 1/16

PROCESS DESCRIPTION

Tank Number					
Process	CrO_3 ANODIZE				
Temperature					
Agitation					
Fume Suppressant					
Ventilation System Performance					
Load Surface Area					
Comments	G-1 Four AL sheets 60"x43"x1/16			First batch	
	G-2 2 AL sheets			start 1235 10 June 92	
	G-2 heater NOT WORKING			Second batch	
	G-1 4 Al sheets				
	G-1 4 Al sheets ~~4 (sheets)~~			Third batch 0835	11 June 92
	8 Al sheets 2½			Fourth batch	11 June

~~20"x43"x1/16~~
20"x43"x1/16
4 (1/3 sheets)

TANK LOAD DATA SHEET (CONTINUED)

	TANK NUMBER	Tank G-1	G-2	G-1	G-2	
	TIME (INIT)	~~[illegible]~~	84°/AMPERES AND OR AMPERE-HOURS			
	0925	280A / 486440	80 / 487621	41V/84° / 66°F	40V / 66°	
	0940	330 / 487034	80 / 487747	41V/90°F	40V / 66°	
	0955	340A / 487790	80 / 487884	41A / 91°F	40V / 66	
768	1005	380A / 488250	80 / 487984	41V / 92	40V / 65	
763	1020	430A / 488232	80 / 488014	41V / 92	40V / 65	
	1035	450A / 490240	80A / 488252	41V / 91	40V / 65	
Stop	1050	450A / 491208	80A / 488384	41V / 91	40V / 65	
at 1235	1240	350 / 491585	—	41V / 91	—	
1637	1250	350 / 492040		41V / 92		
Stop	1305	360 / 492845		41V / 92		
Start 330	1330	330 / 492922		41V / 92		← Change Port
3932	1345	380 / 493790		40V / 91		
	1400	400 / 494800		40V / 91		
	1415	450 / 495860		41 / 91		
1 batch	1430	450 / 496854		41 / 91		
at 0835	0835	80A / 496854		42V / 82		
une 92	0855	160A / 497173		40V / 88		
	0910	160A / 497470		40V / 93		
2361	0925	175A / 497803		40V / 91		
	0945	200A / 498200		40V / 92		
	1000	200A / 498620		40V / 92		
	1015	210A / 499052		40V / 92		
Stop	1022	210A / 499215		41V / 92		

TANK LOAD DATA SHEET (CONTINUED)

2 sheets 60"x43" x ½
1 ~~half~~ sheet 20"x43"

ANODIZE

TANK NUMBER	G-1	V / Temp			
TIME (INIT)	Fourth batch	AMPERES AND OR AMPERE-HOURS			~~Total sheets~~
Start → 1230	125 / 449215	40 V / 91°F			
11 June 92 1240	200 / 499538	40 / 91			
9:16 1250	200 / 499840	40 / 91			
Stop → 1300	200 / 500151	40V / 91°F			
Change Port					
Start 1315	200 / 500151	40V / 91°F			
1330	250 / 500610	40V / 91°F			
2:15 1345	280 / 501200	40V / 91°F			
1400	280 / 501860	40V / 91°F			
Stop 1415	300 / 502466	40V / 91°F			

PRELIMINARY VELOCITY TRAVERSE DATA SHEET

DATE: 6/9/92 READ BY:	A	DISTURB	DISTANCE A: ft/dia
BASE: NAD ALAMEDA		TEST SITE	DISTANCE B: ft/dia
BUILDING NO: 32			TRAVERSE PTS REQ'D: 24
SOURCE ID: LINE G			TRAVERSE PTS USED, n: 24
AP CONTROLS: WET SCRUBBER FIBER BED FILTER	B		CIRCULAR DIAMETER: 48 in
TEST SITE: INLET OUTLET N/A		DISTURB	RECTANGULAR L x W: in

	STACK PRESSURES (inches H_2O) ΔP_{vel}	P_{stat}	$\sqrt{\Delta P}$	CYCLONIC FLOW $\lvert\alpha\rvert°$
1	.33		.57	
2	.37		.61	
3	.45		.67	
4	.52		.72	
5	.63		.79	
6	.73		.85	
7	.64		.80	
8	.53		.73	
9	.35		.60	
10	.29		.54	
11	.26		.51	
12	.22		.47	

	STACK PRESSURES (inches H_2O) ΔP_{vel}	P_{stat}	$\sqrt{\Delta P}$	CYCLONIC FLOW $\lvert\alpha\rvert°$
13	.35		.59	
14	.38		.62	
15	.45		.67	
16	.56	-.23	.75	
17	.64		.80	
18	.73		.85	
19	.62		.79	
20	.53	-.22	.73	
21	.33		.57	
22	.26		.51	
23	.25		.50	
24	.19		.44	

AVERAGE VELOCITY HEAD $\Delta P = [(\Sigma\sqrt{\Delta P})/n]^2 =$ .43

AVERAGE STATIC PRESSURE $= (\Sigma P_{stat})/n =$ -.23

AVERAGE CYCLONIC FLOW ANGLE $= (\Sigma\alpha)/n =$ _____

CHROMIUM EMISSION TEST

IMPINGER BOX SET UP & NOZZLE CALIBRATION SHEET

DATE: _____ AP CONTROLS: _____

BASE: _____ TEST SITE: INLET OUTLET N/A

BUILDING NO: 32 TEST RUN NO: _____

SOURCE ID: G-out-1 silver IMPINGER BOX: 1 PREP BY: [illegible]

[ ] 1. Initially wash all glassware as follows; detergent wash, deionized water rinse, 1:1 HNO3 solution soak, deionized water rinse, and 0.1N NaOH solution rinse. Sample recovery preps glassware for next use.

[ ] 2. Add 100ml 0.1N NaOH solution to the first two impingers (standard, modified impingers, respectively). Record initial weights.

[ ] 3. Leave the third impinger (modified) empty. Record initial weight.

[ ] 4. Fill the fourth impinger (modified) with indicating type silica gel. Record initial weight. If sampling time is > 6 hours, add a fifth silica gel impinger.

[ ] 5. Place Pallflex T60A20 teflon coated filter or equivalent into filter holder and install between the third and fourth impingers. Do not weigh or number the filter.

[ ] 6. Assemble impinger bottles and glass elbows (180s) so that air flows from a smaller to larger holes (if applicable). Do not grease balljoint fittings.

[ ] 7. Calibrate nozzle by measuring four IDs with a micrometer.

	Impinger No.	Contents	Initial	Final	Change
1	1-1	100 ml 0.1 N NaOH 453.7	543.3	577.3	34.0
2	1-2	100 ml 0.1 N NaOH 453.2	542.7	548.3	5.6
3	1-3	Empty	453.1	455.9	2.8
4	1-4	Silica Gel 467.2	792.1	845.6	53.5
5	1-5	Silica Gel 512.2	840.9	NOT USED	
				Net Weight Gain	95.9

Note: Record weights as grams.

Silica Gel Condition Before Test: Blue After Test: 70% spent

Nozzle No: _____ Calibrated by: _____

ID Before Test: _____ _____ _____ _____ _____

ID After Test: 0.264 (0°) 0.265 (90°) 0.264 (45°) 0.264 (135°) 0.264 (Average)

Liq Wt. = 611.8 − 287.3 = 324.5 grams

CHROMIUM EMISSION TEST DATA SHEET

SITE INFORMATION	STACK GAS ESTIMATES	TEST SITE	DRY GAS METER	SAMPLING PROBE	NOZZLE	MISCELLANEOUS
Location: MAD Alameda	Temperature, F: 70	Schematic of Stack Cross-Section & Traverse Points	DGM Box #: 17	Probe # (Pitot #): 5N-13	Nozzle #:	Barometer P, in Hg:
Building: 32	Static Pressure, in H2O: -.23		Gamma: 1.001	Pitot Coefficient: .84	Nozzle Dia, in: .264	Ambient T, F: 60
Operator: J.L., BH	Velocity Head, in H2O: (Delta-P) .43		Delta-H@: 1.773	Probe Length, in.: 5'	Ideal Nozzle Dia, in:	Impinger Box #: W0437
Date: 6/10/92	Moisture Content, %: 2		DGM Inlet Temp, F: (Avg. Est.) 80	Probe Liner Material: GLASS	LEAK CHECK: INITIAL or FINAL	
Test #: G-out-1	Wet MW, lb-lbmole: (Default 28.8) 28.8	Area, in2: 1810 Dia or L x W, in:		Probe Heater Setting, F: N/A	+ PITOT passed @ 8.6 in. H2O - PITOT passed @ 8.8 in. H2O	
					SYSTEM cfm @ in. Hg	

Start or Stop Time	Traverse Point #	Sampling Time min	Dry Gas Meter Reading cf	Orifice Delta-H in. H2O	Delta-P in. H2O STD A	Stack Temp F (TC1) STD B	Temp. F @ DGM Inlet (TC6) STD C	Temp. F @ DGM Outlet (TC7)	Impinger Temp. F (TC4)	Filter Box Temp. F (TC3)	Sample Vacuum in. Hg	Stack Gas Analysis O2 %	CO2 %	CO ppm	NOx ppm	SO2 ppm
	1	0	701.561	1.50	.31	74	58	58	45	N/A	3.9	20.9	0.0	0.0	0.0	0.0
	2	10	707.64	1.84	.38	76	60	58	45	N/A	4.5	20.9	0.0	0.0	0.0	0.0
	3	20	716	1.86	.38	77	66	61	49	N/A	4.5	20.9	0.0	0.0	0.0	0.0
	4	30	723.7	2.47	.50	77	71	64	49	N/A	5.5	20.9	0.0	0.0	0.0	0.0
	5	40	732.4	3.14	.63	77	75	67	49	N/A	7.0	20.9	0.0	0.0	0.0	0.0
	6	50	742.3	3.64	.73	78	77	69	50	N/A	8.0	20.9	0.0	0.0	0.0	0.0
	7	60	752.85	3.27	.65	79	82	72	51	N/A	6.5	20.9	0.0	0.0	0.0	0.0
	8	80	763.1	2.52	.51	79	83	74	50	N/A	6.0	20.9	0.0	0.0	0.0	0.0
	9	80	772.1	1.93	.38	79	86	77	51	N/A	5.9	20.9	0.0	0.0	0.0	0.0
	10	90	781.045	1.28	.26	78	70	70	50	N/A	3.5	20.9	0.0	0.0	0.0	0.0
	11	100	787.50	1.18	.24	79	72	70	45	N/A	3.5	20.9	0.0	0.0	0.0	0.0
	12	110	794.150	.95	.19	80	77	70	49	N/A	3.0	20.9	0.0	0.0	0.0	0.0
		120	799.752							N/A		20.9	0.0	0.0	0.0	0.0
Final DGM Volume:									Gas Analysis Averages:			20.9	0.0	0.0	0.0	0.0

Rev. 5/92

.76

205	215	225	236
869.52	876.53	882.80	889.28
103.2	102.5	101.5	100.2

SILVER PROBE

CHROMIUM EMISSION TEST DATA SHEET

SITE INFORMATION	STACK GAS ESTIMATES	TEST SITE	DRY GAS METER	SAMPLING PROBE	NOZZLE	MISCELLANEOUS
Location: NAD ALAMEDA, CA	Temperature, F:	Schematic of Stack Cross-Section & Traverse Points	DGM Box #:	Probe # (Pitot #):	Nozzle #:	Barometer P, in Hg:
Building: 32	Static Pressure, in H20:		Gamma:	Pitot Coefficient:	Nozzle Dia, in:	Ambient T, F:
Operator: RWS - PT 19	Velocity Head, in H20: (Delta-P)		Delta-H@:	Probe Length, in.:	Ideal Nozzle Dia, in:	Impinger Box #:
Date: 10-11 JUNE 92	Moisture Content, %:		DGM Inlet Temp, F: (Avg. Est.)	Probe Liner Material: GLASS	LEAK CHECK: INITIAL or FINAL	
Test #: 3 G-OUTLET-1	Wet MW, lb-lbmole: (Default 28.8)	Area, in2: / Dia or L x W, in:		Probe Heater Setting, F: N/A	PITOT @ in. H2O / PITOT @ in. H2O	SYSTEM cfm @ in. Hg

Start or Stop Time	Traverse Point #	Sampling Time min	Dry Gas Meter Reading cf	Orifice Delta-H in. H2O	Delta-P in. H2O STG A	Stack Temp F (TC1) STG B	Temp. F @ DGM Inlet (TC6) STG C	Temp. F @ DGM Outlet (TC7)	Impinger Temp. F (TC4)	Filter Box Temp. F (TC7)	Sample Vacuum in. Hg	Stack Gas Analysis O2 %	CO2 %	CO ppm	NOx ppm	SO2 ppm
	13	120	799.750	.99	.20	76	72	71	50	N/A	2.0	20.9	0.0	0.0	0.0	0.0
	14	130	805.6	1.19	.24	77	72	71	50	N/A	3.3	20.9	0.0	0.0	0.0	0.0
	15	140	811.7	1.59	.32	78	76	72	51	N/A	4.0	20.9	0.0	0.0	0.0	0.0
	16	150	818.75	1.75	.35	79	78	72	51	N/A	4.5	20.9	0.0	0.0	0.0	0.0
	17	160	826.4	2.56	.51	78	79	73	52	N/A	6.0	20.9	0.0	0.0	0.0	0.0
	18	170	835.35	3.56	.71	79	81	74	53	N/A	8.0	20.9	0.0	0.0	0.0	0.0
START 11 JUNE	19	180	845.8	3.52	0.72	78	66	65	52	N/A	8.0	20.9	0.0	0.0	0.0	0.0
	20	190		2.87	0.58	78	72	66	46	N/A	7.0	20.9	0.0	0.0	0.0	0.0
STOP 856	21	200	865.675	2.16	0.44	79	69	68	57	N/A	4.5	20.9	0.0	0.0	0.0	0.0
	22	210		1.84	0.37	79	75	69	45	N/A	4.0	20.9	0.0	0.0	0.0	0.0
	23	220		1.65	0.33	79	78	71	48	N/A	3.3	20.9	0.0	0.0	0.0	0.0
	24	230		1.55	0.31	80	79	73	49	N/A	3.2	20.9	0.0	0.0	0.0	0.0
		240	891.95							N/A		20.9	0.0	0.0	0.0	0.0
Final DGM Volume:										Gas Analysis Averages:		20.9	0.0	0.0	0.0	0.0

Rev. 5/92

SILVER PROBE

CHROMIUM EMISSION TEST DATA SHEET

SITE INFORMATION	STACK GAS ESTIMATES	TEST SITE	DRY GAS METER	SAMPLING PROBE	NOZZLE	MISCELLANEOUS
Location: NAD ALAMEDA, CA	Temperature, F:	Schematic of Stack Cross-Section & Traverse Points	DGM Box #:	Probe # (Pitot #):	Nozzle #:	Barometer P, in Hg:
Building: 32	Static Pressure, in H2O:		Gamma:	Pitot Coefficient:	Nozzle Dia, in:	Ambient T, F:
Operator: RWS	Velocity Head, in H2O: (Delta-P)		Delta-H@:	Probe Length, in.:	Heat Nozzle Dia, in:	Impinger Box #:
Date: 11 JUNE 92	Moisture Content, %:		DGM Inlet Temp, F: (Avg. Est.)	Probe Liner Material: GLASS	LEAK CHECK: INITIAL or FINAL	
Test #: 9-OUTLET-1	Wet MW, lb-lbmole: (Default 29.0)	Area, in2: / Dia or L x W, in:		Probe Heater Setting, F: N/A	PITOT @ in. H2O / PITOT @ in. H2O	
					SYSTEM cfm @ in. Hg.	

Start or Stop Time	Traverse Point #	Sampling Time min	Dry Gas Meter Reading cf	Orifice Delta-H in. H2O	Delta-P in. H2O (STO A)	Stack Temp F (TC1) (STO B)	Temp. F @ DGM Inlet (TC2) STO C	Temp. F @ DGM Outlet (TC7)	Impinger Temp. F (TC4)	Filter Box Temp. F (TC3)	Sample Vacuum in. Hg	Stack Gas Analysis O2 %	CO2 %	CO ppm	NOx ppm	SO2 ppm
	24	240	891.95	1.61	0.32	79	81	74	48	N/A	4.0	20.9	0.0	0.0	0.0	0.0
	23	245	895.44	1.66	0.33	79	82	75	49	N/A	4.0	20.9	0.0	0.0	0.0	0.0
	22	250	899.09	1.86	0.37	80	83	75	49	N/A	3.8	20.9	0.0	0.0	0.0	0.0
	21	255	902.55	2.21	0.44	80	83	76	49	N/A	5.5	20.9	0.0	0.0	0.0	0.0
	20	260	906.84	2.82	0.56	80	84	77	50	N/A	7.0	20.9	0.0	0.0	0.0	0.0
	19	265	911.70	3.58	0.71	80	85	77	51	N/A	8.0	20.9	0.0	0.0	0.0	0.0
STOP 1024	18	270	917.0575	3.70	0.75	77	70	70	65	N/A	8.0	20.9	0.0	0.0	0.0	0.0
	17	275	922.41	2.78	0.56	78	74	71	49	N/A	6.5	20.9	0.0	0.0	0.0	0.0
	16	280	927.65	2.14	0.43	78	76	71	49	N/A	4.8	20.9	0.0	0.0	0.0	0.0
	17	285	931.68	1.80	0.36	77	78	72	50	N/A	4.7	20.9	0.0	0.0	0.0	0.0
	14	290	935.58	1.75	0.35	78	79	72	50	N/A	4.6	20.9	0.0	0.0	0.0	0.0
	13	295	939.52	1.31	0.26	77	79	73	50	N/A	3.5	20.9	0.0	0.0	0.0	0.0
		300	943.166							N/A		20.9	0.0	0.0	0.0	0.0
Final DGM Volume:									Gas Analysis Averages:			20.9	0.0	0.0	0.0	0.0

Rev. 6/92

CHROMIUM EMISSION TEST DATA SHEET

SITE INFORMATION	STACK GAS ESTIMATES	TEST SITE	DRY GAS METER	SAMPLING PROBE	NOZZLE	MISCELLANEOUS
Location: UAD, ALAMEDA, CA	Temperature, F:	Schematic of Stack Cross-Section & Traverse Points	DGM Box #:	Probe # (Pitot #):	Nozzle #:	Barometer P, in Hg:
Building: 32	Static Pressure, in H2O:		Gamma:	Pitot Coefficient:	Nozzle Dia, in:	Ambient T, F:
Operator: AWS	Velocity Head, in H2O: (Delta-P)		Delta-H@:	Probe Length, in.:	Ideal Nozzle Dia, in:	Impinger Box #:
Date: 11 JUNE 92	Moisture Content, %:		DGM Inlet Temp, F: (Avg. Est.)	Probe Liner Material: GLASS	LEAK CHECK: INITIAL or FINAL	
Test #: 3 G-OUTLET-1	Wet MW, lb-lbmole: (Default 28.8)	Area, in2: / Dia or L x W, in:		Probe Heater Setting, F: N/A	+ PITOT STEADY @ 8.6 in. H2O - PITOT STEADY @ 5.1 in. H2O SYSTEM 0.011 cfm @ 10 in. Hg	

Start or Stop Time	Traverse Point #	Sampling Time min	Dry Gas Meter Reading cf	Orifice Delta-H in. H2O	Delta-P in. H2O STD A	Stack Temp F (TC1) STD B	Temp. F @ DGM Inlet (TC6) STD C	Temp. F @ DGM Outlet (TC7)	Impinger Temp. F (TC4)	Filter Box Temp. F (TC3)	Sample Vacuum in. Hg	Stack Gas Analysis O2 %	CO2 %	CO ppm	NOx ppm	SO2 ppm
1315	1	300	943.166	1.74	0.35	76	73	72	53	N/A	4.3	20.9	0.0	0.0	0.0	0.0
	2	305	946.92	1.99	0.40	78	75	73	47	N/A	5.0	20.9	0.0	0.0	0.0	0.0
	3	310	951.04	2.25	0.45	79	78	73	48	N/A	5.8	20.9	0.0	0.0	0.0	0.0
	4	315	955.41	2.81	0.56	79	80	73	50	N/A	6.0	20.9	0.0	0.0	0.0	0.0
	5	320	959.89	3.46	0.69	79	81	74	51	N/A	8.0	20.9	0.0	0.0	0.0	0.0
	6	325	966.06	3.87	0.77	80	82	75	52	N/A	8.8	20.9	0.0	0.0	0.0	0.0
	7	330	970.67	3.58	0.71	81	86	77	56	N/A	8.0	20.9	0.0	0.0	0.0	0.0
	8	335	975.86	2.92	0.58	80	84	76	53	N/A	6.5	20.9	0.0	0.0	0.0	0.0
	9	340	980.53	2.01	0.40	80	83	76	53	N/A	4.4	20.9	0.0	0.0	0.0	0.0
	10	345	984.10	1.65	0.31	80	81	76	52	N/A	3.3	20.9	0.0	0.0	0.0	0.0
	11	350	986.96	1.55	0.31	81	81	76	52	N/A	3.3	20.9	0.0	0.0	0.0	0.0
	12	355	989.92	1.15	0.23	81	80	76	51	N/A	2.3	20.9	0.0	0.0	0.0	0.0
		360	992.212							N/A		20.9	0.0	0.0	0.0	0.0
Final DGM Volume:										Gas Analysis Averages:		20.9	0.0	0.0	0.0	0.0

Rev. 5/92

END

```
TEST=?
G OUT
RUN=?
          1.
FILTER=?
          0.
GAMMA=?
      1.001
DEL-H-AT=?
      1.773
CSUBP=?
       .840
T-METER=?
     80.000

STACK DATA
AREA, IN2=?
   1,010.000
PSTAT, IN H20=?
       -.230
PBAR, IN HG=?
     30.000
% H20=?
       2.000
WET MOL WT
MS. LB/LBMOL=?
     28.000
AVG DELTA-P,
IN H20=?
        .430
T-STACK, F=?
     70.000
STACK VEL,
FT/S = 36.092

FOR 0.75 CFM
IDEAL NOZ
DIA, IN. = 0.250

ACTUAL NOZ
DIA, IN=?
        .264

SAMPLE CFM = 0.836

INSTRUCTIONS

STO
 A = DELTA-P
 B = T-STACK
 C = T-METER
R/S

TO FIX ERROR
STO -A -B -C
R/S

TO CHECK ISO:
500, R/S

TO END RUN:
0, R/S
```

```
RUN INIT MTR
    VOL, FT3=?
        781.561   RUN
RUN ***********
RUN POINT NO. 1.
            58.00 STO 03
            75.00 STO 02
             .31 STO 01
RUN                    RUN
    DELTA-H= 1.50
RUN ***********
    POINT NO. 2.
RUN         76.00 STO 02
            60.00 STO 03
             .38 STO 01
                       RUN
RUN DELTA-H= 1.84
    ***********
RUN POINT NO. 3.
            66.00 STO 03
RUN         77.00 STO 02
                       RUN
RUN DELTA-H= 1.86
    ***********
    POINT NO. 4.
RUN         71.00 STO 03
             .50 STO 01
                       RUN
RUN DELTA-H= 2.47
    ***********
RUN POINT NO. 5.
            75.00 STO 03
             .63 STO 01
                       RUN
    DELTA-H= 3.14
    ***********
    POINT NO. 6.
            77.00 STO 03
            78.00 STO 02
             .73 STO 01
RUN                    RUN
    DELTA-H= 3.64
    ***********
    POINT NO. 7.
            82.00 STO 03
            79.00 STO 02
             .65 STO 01
                       RUN
    DELTA-H= 3.27
    ***********
    POINT NO. 8.
            83.00 STO 03
             .50 STO 01
                       RUN
    DELTA-H= 2.52
    ***********
    POINT NO. 9.
            86.00 STO 03
             .38 STO 01
                       RUN
    DELTA-H= 1.93
    ***********
```

```
POINT NO. 10.
            78.00 STO 03
            78.00 STO 02
             .26 STO 01
                       RUN
DELTA-H= 1.28
***********
POINT NO. 11.
            72.00 STO 03
            79.00 STO 02
             .24 STO 01
                       RUN
DELTA-H= 1.10
***********
POINT NO. 12.
            77.00 STO 03
            80.00 STO 02
             .19 STO 01
                       RUN
DELTA-H= 0.95
***********
POINT NO. 13.
             .20 STO 01
            76.00 STO 02
            72.00 STO 03
                       RUN
DELTA-H= 0.99
***********
POINT NO. 14.
             .24 STO 01
            72.00 STO 03
            77.00 STO 02
                       RUN
DELTA-H= 1.19
***********
POINT NO. 15.
             .32 STO 01
            78.00 STO 02
            76.00 STO 03
                       RUN
DELTA-H= 1.59
***********
POINT NO. 16.
             .35 STO 01
            79.00 STO 02
            78.00 STO 03
                       RUN
DELTA-H= 1.75
***********
POINT NO. 17.
            79.00 STO 03
            78.00 STO 02
             .51 STO 01
                       RUN
DELTA-H= 2.56
***********
POINT NO. 18.
            81.00 STO 03
            79.00 STO 02
             .71 STO 01
                       RUN
DELTA-H= 3.56
***********
```

```
POINT NO. 19.
             .72 STO 01
            78.00 STO 02
            66.00 STO 03
                       RUN
DELTA-H= 3.52
***********
POINT NO. 20.
             .50 STO 01
            72.00 STO 03
                       RUN
DELTA-H= 2.87
***********
POINT NO. 21.
             .44 STO 01
            79.00 STO 02
            69.00 STO 03
                       RUN
DELTA-H= 2.16
***********
POINT NO. 22.
             .37 STO 01
            75.00 STO 03
                       RUN
DELTA-H= 1.84
***********
POINT NO. 23.
             .33 STO 01
            78.00 STO 03
                       RUN
DELTA-H= 1.65
***********
POINT NO. 24.
             .31 STO 01
            80.00 STO 02
            79.00 STO 03
                       RUN
DELTA-H= 1.55
***********
POINT NO. 25.
             .32 STO 01
            79.00 STO 02
            81.00 STO 03
                       RUN
DELTA-H= 1.61
***********
POINT NO. 26.
             .33 STO 01
            82.00 STO 03
                       RUN
DELTA-H= 1.66
***********
POINT NO. 27.
             .37 STO 01
            80.00 STO 02
            83.00 STO 03
                       RUN
DELTA-H= 1.86
***********
POINT NO. 28.
             .44 STO 01
                       RUN
DELTA-H= 2.21
```

```
***********
POINT NO. 29.
             .56 STO 01
            84.00 STO 03
                       RUN
DELTA-H= 2.82
***********
POINT NO. 30.
             .71 STO 01
            85.00 STO 03
                       RUN
DELTA-H= 3.56
***********
POINT NO. 31.
             .75 STO 01
            77.00 STO 02
            70.00 STO 03
                       RUN
DELTA-H= 3.70
***********
POINT NO. 32.
             .56 STO 01
            76.00 STO 02
            74.00 STO 03
                       RUN
DELTA-H= 2.78
***********
POINT NO. 33.
             .43 STO 01
            76.00 STO 03
                       RUN
DELTA-H= 2.14
***********
POINT NO. 34.
             .36 STO 01
            77.00 STO 02
            78.00 STO 03
                       RUN
DELTA-H= 1.80
***********
POINT NO. 35.
             .35 STO 01
            78.00 STO 02
            79.00 STO 03
                       RUN
DELTA-H= 1.75
***********
POINT NO. 36.
             .26 STO 01
            77.00 STO 02
                       RUN
DELTA-H= 1.31
***********
POINT NO. 37.
             .35 STO 01
            76.00 STO 02
            73.00 STO 03
                       RUN
DELTA-H= 1.74
***********
```

```
POINT NO. 38.
          .40 STO 01
        78.00 STO 02
        75.00 STO 03
                  RUN
DELTA-H= 1.99
**************
POINT NO. 39.
          .45 STO 01
        79.00 STO 02
        78.00 STO 03
                  RUN
DELTA-H= 2.25
**************
POINT NO. 40.
          .56 STO 01
        80.00 STO 03
                  RUN
DELTA-H= 2.81
**************
POINT NO. 41.
          .69 STO 01
        81.00 STO 03
                  RUN
DELTA-H= 3.46
**************
POINT NO. 42.
          .77 STO 01
        80.00 STO 02
        82.00 STO 03
                  RUN
DELTA-H= 3.87
**************
POINT NO. 43.
          .71 STO 01
        81.00 STO 02
        86.00 STO 03
                  RUN
DELTA-H= 3.58
**************
POINT NO. 44.
          .58 STO 01
        80.00 STO 02
        84.00 STO 03
                  RUN
DELTA-H= 2.92
**************
POINT NO. 45.
          .40 STO 01
        83.00 STO 03
                  RUN
DELTA-H= 2.01
**************
POINT NO. 46.
          .31 STO 01
        81.00
              STO 03
                  RUN
DELTA-H= 1.55
**************
POINT NO. 47.
        0.00 STO 02
                  RUN
```

```
DELTA-H= 1.55
**************
POINT NO. 48.
          .23 STO 01
        80.00 STO 03
                  RUN
DELTA-H= 1.15
**************
POINT NO. 49.
          0.00    RUN
END RUN=?
1=YES 0=NO
          1.00    RUN
**AVERAGES**
KV=15.244
TMETER F=76.917
TSTACK F=78.563
PSTACK, IN HG=29.983
DELTA-H=2.228
DELTA-P=0.431

FINAL METER
VOL, FT3=?
          992.212    RUN
INITIAL=701.561
TIME, MIN=?
          360.000    RUN
SOURCE?
0=OTHER
1=BOILER
          0.000    RUN
% O2=?
          20.900    RUN
% CO2=?
          0.000    RUN
H2O WT KNOWN?
1=YES 0=NO
          1.000    RUN
WEIGH IMPS
THEN B/S
                   RUN
GRAMS H2O=?
          95.900    RUN

MTR VOL, DSCF=
                 288.424
1-BWS =
                   0.985
% H2O =
                     1.5
STACK GAS MET
MOL. WT, MS,
LB/LB MOL=
                  28.669

AVG STACK
VEL, FT/S =
                  37.338
```

```
STACK FLOW
ACFM =
                 28,159.832
DSCFM =
                 27,236.773
                   RUN
ISOKIN % = 97.3
**END**
```

CHROMIUM EMISSION TEST

IMPINGER BOX SET UP & NOZZLE CALIBRATION SHEET

DATE: _____ AP CONTROLS: _____

BASE: _____ TEST SITE: INLET OUTLET N/A

BUILDING NO: 32 TEST RUN NO: _____

SOURCE ID: G-out-2 blank IMPINGER BOX: 2 PREP BY: [illegible]

[ ] 1. Initially wash all glassware as follows; detergent wash, deionized water rinse, 1:1 HNO3 solution soak, deionized water rinse, and 0.1N NaOH solution rinse. Sample recovery preps glassware for next use.

[ ] 2. Add 100ml 0.1N NaOH solution to the first two impingers (standard, modified impingers, respectively). Record initial weights.

[ ] 3. Leave the third impinger (modified) empty. Record initial weight.

[ ] 4. Fill the fourth impinger (modified) with indicating type silica gel. Record initial weight. If sampling time is > 6 hours, add a fifth silica gel impinger.

[ ] 5. Place Pallflex T60A20 teflon coated filter or equivalent into filter holder and install between the third and fourth impingers. Do not weigh or number the filter.

[ ] 6. Assemble impinger bottles and glass elbows (180s) so that air flows from a smaller to larger holes (if applicable). Do not grease balljoint fittings.

[ ] 7. Calibrate nozzle by measuring four IDs with a micrometer.

	Impinger No.	Contents	Initial	Final	Change
1	2-1	100 ml 0.1 N NaOH 453.5	530.8	558.4	27.6
2	2-2	100 ml 0.1 N NaOH 494.2	524.4	532.4	8.0
3	2-3	Empty	499.9	503.0	3.1
4	2-4	Silica Gel	813.5	870.6	57.1
5	2-5	Silica Gel	792.8	NOT USED	-
	Note: Record weights as grams.			Net Weight Gain	95.8

Silica Gel Condition Before Test: Blue After Test: _____

Nozzle No: _____ Calibrated by: _____

	0°	90°	45°	135°	Average
ID Before Test:					
ID After Test:	0.264	0.264	0.264	0.264	0.264

Lid wt = 664.9 - 290.9 = 374.0 grams

CHROMIUM EMISSION

STACK GAS ESTIMATES

TEST SITE

SITE INFORMATION

Location: NAD Alameda

Building: 32

Operator: BH

Date: 6/10/92

Test #: G-out-2

Temperature, F: 70

Static Pressure, in H2O: -.23

Velocity Head, in H2O: (Delta-P) .43

Moisture Content, %: 2

Wet MW, lb-lbmole: (Default 28.8) 28.8

Area, in2: 1810

Dia or L x W, in: 4'

Schematic of Stack

Cross-Section & Traverse Points

Start or Stop Time	Traverse Point #	Sampling Time min	Dry Gas Meter Reading	Orifice Delta-H in. H2O	Delta-P in. H2O STO A	Stack Temp F (TC1) STO B	Temp. F @ DGM Inlet(TC6) STO C	Outlet (TC7)
	B	0	629.9 of 452	1.12	.23	73	56	55
	14	10	635.7	1.37	.24	74	59	59
	15	20	642.24	1.63	.33	75	65	61
	16	30	649.53	2.04	.41	76	70	65
	17	40	657.76	2.62	.52	75	76	67
	18	50	667.1	3.48	.69	77	79	70
	19	60	677.55	3.35	.66	79	83	72
	20	70	687.89	2.80	.55	79	85	75
	21	80	697.41	2.24	.44	[illegible]	85	76
	22	90	706.05	1.89	.38	77	70	70
	23	100	714.64	1.69	.34	78	72	71
	24	110	722.08	1.56	.31	79	77	73
		120	729.226					

Final DGM Volume:

Rev. 6/92

CHROMIUM EMISSION TEST DATA SHEET

SITE INFORMATION	STACK GAS ESTIMATES	TEST SITE	DRY GAS METER	SAMPLING PROBE	NOZZLE	MISCELLANEOUS
Location: ~~32~~ Alameda	Temperature, F:	Schematic of Stack Cross-Section & Traverse Points	DGM Box #:	Probe # (Pitot #):	Nozzle #:	Barometer P, in Hg:
Building: 32	Static Pressure, in H2O:		Gamma:	Pitot Coefficient:	Nozzle Dia, in:	Ambient T, F:
Operator: BH	Velocity Head, in H2O: (Delta-P)		Delta-H@:	Probe Length, in.:	Ideal Nozzle Dia, in:	Impinger Box #:
Date: 6/10/92	Moisture Content, %:		DGM Inlet Temp, F: (Avg. Est.)	Probe Liner Material: GLASS	LEAK CHECK: INITIAL or FINAL	
Test #: G-out-2	Wet MW, lb-lbmole: (Default 28.8)	Area, in2: / Dia or L x W, in:		Probe Heater Setting, F: N/A	+ PITOT @ in. H2O	
					- PITOT @ in. H2O	
					SYSTEM cfm @ in. Hg	

Start or Stop Time	Traverse Point #	Sampling Time min	Dry Gas Meter Reading cf	Orifice Delta-H in. H2O	Delta-P in. H2O STO A	Stack Temp F (TC1) STO B	Temp. F @ DGM Inlet (TC6) STO C	Temp. F @ DGM Outlet (TC7)	Impinger Temp. F (TC4)	Filter Box Temp. F (TC3)	Sample Vacuum in. Hg	Stack Gas Analysis O2 %	CO2 %	CO ppm	NOx ppm	SO2 ppm
	1	120	729.226	1.45	.29	76	72	72	45	N/A	3.0	20.9	0.0	0.0	0.0	0.0
	2	130	736.16	1.66	.33	76	74	72	45	N/A	3.4	20.9	0.0	0.0	0.0	0.0
	3	140	743.58	1.97	.39	77	77	73	47	N/A	4.0	20.9	0.0	0.0	0.0	0.0
	4	150	751.65	2.58	.51	77	79	73	49	N/A	5.1	20.9	0.0	0.0	0.0	0.0
	5	160	760.78	2.68	.53	78	80	74	50	N/A	5.2	20.9	0.0	0.0	0.0	0.0
	6	170		3.60	.71	77	81	74	50	N/A	7.0	20.9	0.0	0.0	0.0	0.0
	7	180	780.898	3.35	.68	76	64	62	42	N/A	6.6	20.9	0.0	0.0	0.0	0.0
	8	190	790.84	2.48	.50	77	68	64	47	N/A	5.0	20.9	0.0	0.0	0.0	0.0
	9	200	799.70	1.92	.39	78	66	66	43	N/A	3.8	20.9	0.0	0.0	0.0	0.0
	10	210	807.43	1.44	.29	78	70	67	47	N/A	3.0	20.9	0.0	0.0	0.0	0.0
	11	220	814.23	1.35	.27	79	74	69	50	N/A	3.0	20.9	0.0	0.0	0.0	0.0
	12	230	820.67	1.05	.21	79	77	71	49	N/A	2.5	20.9	0.0	0.0	0.0	0.0
		240	826.61							N/A		20.9	0.0	0.0	0.0	0.0
Gas Analysis Averages:												20.9	0.0	0.0	0.0	0.0

Final DGM Volume:

Rev. 5/92

CHROMIUM EMISSION TEST DATA SHEET

SITE INFORMATION	STACK GAS ESTIMATES	TEST SITE	DRY GAS METER	SAMPLING PROBE	NOZZLE	MISCELLANEOUS
Location: NAD Alameda	Temperature, F:	Schematic of Stack Cross-Section & Traverse Points	DGM Box #:	Probe # (Pitot #):	Nozzle #:	Barometer P, in Hg:
Building: 32	Static Pressure, in H2O:		Gamma:	Pitot Coefficient:	Nozzle Dia, in:	Ambient T, F:
Operator: BH	Velocity Head, in H2O: (Delta-P)		Delta-H@:	Probe Length, in.:	Ideal Nozzle Dia, in:	Impinger Box #:
Date: 6/11/92	Moisture Content, %:		DGM Inlet Temp, F: (Avg. Est.)	Probe Liner Material: GLASS	LEAK CHECK: INITIAL or FINAL	
Test #: G-out-2	Wet MW, lb/lbmole: (Default 28.8)	Area, in2: / Dia or L x W, in:		Probe Heater Setting, F: N/A	+ PITOT @ in. H2O - PITOT @ in. H2O SYSTEM cfm @ in. Hg	

Start or Stop Time	Traverse Point #	Sampling Time min	Dry Gas Meter Reading cf	Orifice Delta-H in. H2O	Delta-P in. H2O STD A	Stack Temp F (TC1) STD B	Temp. F @ DGM Inlet(TC6) STD C	Temp. F @ DGM Outlet (TC7)	Impinger Temp. F (TC4)	Filter Box Temp. F (TC3)	Sample Vacuum in. Hg	Stack Gas Analysis O2 %	CO2 %	CO ppm	NOx ppm	SO2 ppm
	12	240	826.61	1.05	.21	78 ~~79~~	78 ~~77~~	71	49	N/A	2.5	20.9	0.0	0.0	0.0	0.0
	11	245	829.56	1.21	.24	78	79	72	49	N/A	2.8	20.9	0.0	0.0	0.0	0.0
	10	250	832.8	1.56	.31	79	78	72	49	N/A	3.2	20.9	0.0	0.0	0.0	0.0
	9	255	836.37	1.91	.38	78	78	74	49	N/A	3.8	20.9	0.0	0.0	0.0	0.0
	8	260	840.2	2.37	.47	79	80	74	49	N/A	4.3	20.9	0.0	0.0	0.0	0.0
Load change	7	265	844.52	3.39	.67	~~78~~ 78	81	75	50	N/A	6.2	20.9	0.0	0.0	0.0	0.0
	6	270	849.637	3.81	.77	78	68	70	46	N/A	7.0	20.9	0.0	0.0	0.0	0.0
	5	275		3.37	.68	77	68	69	48	N/A	6.8	20.9	0.0	0.0	0.0	0.0
	4	280	860.48	3.04	.61	78	73	69	50	N/A	6.0	20.9	0.0	0.0	0.0	0.0
	3	285	865.32	2.30	.46	79	76	70	52	N/A	6.0	20.9	0.0	0.0	0.0	0.0
	2	290	869.56	1.91	.38	79	78	71	52	N/A	3.9	20.9	0.0	0.0	0.0	0.0
	1	295		1.66	.33	79	79	72	51	N/A	3.2	20.9	0.0	0.0	0.0	0.0
		300	877.013							N/A		20.9	0.0	0.0	0.0	0.0
Final DGM Volume:									Gas Analysis Averages:			20.9	0.0	0.0	0.0	0.0

Rev. 6/92

CHROMIUM EMISSION TEST DATA SHEET

SITE INFORMATION	STACK GAS ESTIMATES	TEST SITE	DRY GAS METER	SAMPLING PROBE	NOZZLE	MISCELLANEOUS
Location: NAD Alameda	Temperature, F:	Schematic of Stack Cross-Section & Traverse Points	DGM Box #:	Probe # (Pitot #):	Nozzle #:	Barometer P, in Hg:
Building: 32	Static Pressure, in H2O:		Gamma:	Pitot Coefficient:	Nozzle Dia, in:	Ambient T, F:
Operator: BH	Velocity Head, in H2O: (Delta-P)		Delta-H@:	Probe Length, in.:	Ideal Nozzle Dia, in:	Impinger Box #:
Date: 6/11/92	Moisture Content, %:		DGM Inlet Temp, F: (Avg. Est.)	Probe Liner Material: GLASS	LEAK CHECK: INITIAL or FINAL	
Test #: G-out-2	Wet MW, lb-lbmole: (Default 28.8)	Area, in2: / Dia or L x W, in:		Probe Heater Setting, F: N/A	+ PITOT pass steady @ 4.8 in. H2O	
					- PITOT pass steady @ 7.9 in. H2O	
					SYSTEM .007 cfm @ 10 in. Hg	

Start or Stop Time	Traverse Point #	Sampling Time min	Dry Gas Meter Reading cf	Orifice Delta-H in. H2O	Delta-P in. H2O STO A	Stack Temp F (TC1) STO B	Temp. F @ DGM Inlet (TC2) STO C	Temp. F @ DGM Outlet (TC7)	Impinger Temp. F (TC4)	Filter Box Temp. F (TC3)	Sample Vacuum in. Hg	Stack Gas Analysis O2 %	CO2 %	CO ppm	NOx ppm	SO2 ppm
	13	300	877.03	1.40	.28	76	72	71	49	N/A	3	20.9	0.0	0.0	0.0	0.0
	14	305	880.48	1.49	.30	77	71	71	48	N/A	3.1	20.9	0.0	0.0	0.0	0.0
	15	310	884.03	1.90	.38	77	73	71	49	N/A	3.7	20.9	0.0	0.0	0.0	0.0
	16	315	887.92	2.16	.43	77	76	72	50	N/A	4.0	20.9	0.0	0.0	0.0	0.0
	17	320	892.17	2.77	.55	79	78	72	51	N/A	5.2	20.9	0.0	0.0	0.0	0.0
	18	325	897.0	3.72	.74	79	78	72	52	N/A	7.0	20.9	0.0	0.0	0.0	0.0
	19	330	902.39	3.48	.69	80	81	73	54	N/A	6.8	20.9	0.0	0.0	0.0	0.0
	20	335	907.62	2.98	.59	80	82	74	55	N/A	6.0	20.9	0.0	0.0	0.0	0.0
	21	340	912.42	2.48	.49	80	82	74	55	N/A	5.1	20.9	0.0	0.0	0.0	0.0
	22	345	916.82	2.07	.41	79	81	74	54	N/A	4.0	20.9	0.0	0.0	0.0	0.0
	23	350	920.79	1.72	.34	80	81	74	54	N/A	3.5	20.9	0.0	0.0	0.0	0.0
	24	355		1.66	.33	80	80	73	54	N/A	3.0	20.9	0.0	0.0	0.0	0.0
		360	928.01							N/A		20.9	0.0	0.0	0.0	0.0
										Gas Analysis Averages:		20.9	0.0	0.0	0.0	0.0

Final DGM Volume:

Rev. 5/92

```
1/92
CLR FLAGS

TEST=?
G OUT                RUN
RUN=?
          2.         RUN
FILTER=?
          0.         RUN
GAMMA=?
       .994          RUN
DEL-H-AT=?
      1.786          RUN
CSUBP=?
       .840          RUN
T-METER=?
     80.000          RUN

STACK DATA
AREA, IN2=?
  1,810.000          RUN
PSTAT, IN H2O=?
       -.230         RUN
PBAR, IN HG=?
     30.000          RUN
% H2O=?
      2.000          RUN
WET MOL WT
MS, LB/LBMOL=?
     28.000          RUN
AVG DELTA-P,
IN H2O=?
       .430          RUN
T-STACK, F=?
     70.000          RUN
STACK VEL,
FT/S = 36.092

FOR 0.75 CFM
IDEAL NOZ
DIA, IN. = 0.250

ACTUAL NOZ
DIA, IN=?
       .264          RUN

SAMPLE CFM = 0.836

INSTRUCTIONS

STO
 A = DELTA-P
 B = T-STACK
 C = T-METER
R/S

TO FIX ERROR
STO -A -B -C
R/S

TO CHECK ISO:
500, R/S
```

```
TO END RUN:
0, R/S

INIT MTR
VOL, FT3=?
        629.452      RUN
**************
POINT NO. 1.
          56.00 STO 03
          73.00 STO 02
            .23 STO 01
                    RUN
DELTA-H= 1.12
**************
POINT NO. 2.
          74.00 STO 02
          59.00 STO 03
            .28 STO 01
                    RUN
DELTA-H= 1.37
**************
POINT NO. 3.
          75.00 STO 02
          65.00 STO 03
            .33 STO 01
                    RUN
DELTA-H= 1.63
**************
POINT NO. 4.
          76.00 STO 02
          70.00 STO 03
            .41 STO 01
                    RUN
DELTA-H= 2.04
**************
POINT NO. 5.
          75.00 STO 02
          76.00 STO 03
            .52 STO 01
                    RUN
DELTA-H= 2.62
**************
POINT NO. 6.
          77.00 STO 02
          78.00 STO 03
            .69 STO 01
                    RUN
DELTA-H= 3.48
**************
POINT NO. 7.
          83.00 STO 03
          79.00 STO 02
            .66 STO 01
                    RUN
DELTA-H= 3.35
**************
POINT NO. 8.
          85.00 STO 03
            .53 STO 01
                    RUN
DELTA-H= 2.00
**************
```

```
POINT NO. 9.
            .44 STO 01
                    RUN
DELTA-H= 2.24
**************
POINT NO. 10.
            .38 STO 01
          77.00 STO 02
          78.00 STO 03
                    RUN
DELTA-H= 1.89
**************
POINT NO. 11.
            .34 STO 01
          78.00 STO 02
          72.00 STO 03
                    RUN
DELTA-H= 1.69
**************
POINT NO. 12.
          78.00 STO 02
          77.00 STO 03
            .34 STO 01
                    RUN
DELTA-H= 1.71
**************
POINT NO. 13.
           -.34 STO 01
            .00 STO 03
         -77.00 STO 03
         -70.00 STO 02
                    RUN
FIXING
DELTA-H= -1.71
**************
POINT NO. 12.
            .31 STO 01
          77.00 STO 03
          78.00 STO 02
                    RUN
DELTA-H= 1.56
**************
POINT NO. 13.
            .29 STO 01
          76.00 STO 02
          72.00 STO 03
                    RUN
DELTA-H= 1.45
**************
POINT NO. 14.
          74.00 STO 03
            .33 STO 01
                    RUN
DELTA-H= 1.66
**************
POINT NO. 15.
          77.00 STO 02
          77.00 STO 03
            .39 STO 01
                    RUN
DELTA-H= 1.97
**************
```

```
POINT NO. 16.
            .51 STO 01
          79.00 STO 03
                    RUN
DELTA-H= 2.50
**************
POINT NO. 17.
          78.00 STO 02
          80.00 STO 03
            .53 STO 01
                    RUN
DELTA-H= 2.68
**************
POINT NO. 18.
          77.00 STO 02
          81.00 STO 03
            .71 STO 01
                    RUN
DELTA-H= 3.60
**************
POINT NO. 19.
            .68 STO 01
          76.00 STO 02
          64.00 STO 03
                    RUN
DELTA-H= 3.35
**************
POINT NO. 20.
          68.00 STO 03
          77.00 STO 02
            .50 STO 01
                    RUN
DELTA-H= 2.48
**************
POINT NO. 21.
            .39 STO 01
          78.00 STO 02
          66.00 STO 03
                    RUN
DELTA-H= 1.92
**************
POINT NO. 22.
          78.00 STO 02
          70.00 STO 03
            .29 STO 01
                    RUN
                    RUN
DELTA-H= 1.44
**************
POINT NO. 23.
          79.00 STO 02
          74.00 STO 03
            .27 STO 01
                    RUN
DELTA-H= 1.35
**************
POINT NO. 24.
          77.00 STO 03
            .21 STO 01
                    RUN
DELTA-H= 1.05
**************
```

```
POINT NO. 25.
            .21 STO 01
          78.00 STO 02
          78.00 STO 03
                    RUN
DELTA-H= 1.06
**************
POINT NO. 26.
            .24 STO 01
          79.00 STO 03
                    RUN
DELTA-H= 1.21
**************
POINT NO. 27.
            .31 STO 01
          79.00 STO 02
          78.00 STO 03
                    RUN
DELTA-H= 1.56
**************
POINT NO. 28.
          78.00 STO 02
          78.00 STO 03
            .38 STO 01
                    RUN
DELTA-H= 1.91
**************
POINT NO. 29.
          79.00 STO 02
          80.00 STO 03
            .47 STO 01
                    RUN
DELTA-H= 2.37
**************
POINT NO. 30.
            .67 STO 01
          81.00 STO 03
          78.00 STO 02
                    RUN
DELTA-H= 3.39
**************
POINT NO. 31.
            .77 STO 01
          78.00
          68.00 STO 03
                    RUN
DELTA-H= 3.81
**************
POINT NO. 32.
            .68 STO 01
          77.00 STO 02
          68.00 STO 03
                    RUN
DELTA-H= 3.37
**************
POINT NO. 33.
            .61 STO 01
          78.00 STO 02
          73.00 STO 03
                    RUN
DELTA-H= 3.04
**************
```

```
POINT NO. 34.
          79.00 STO 02
          76.00 STO 03
            .46 STO 01
                    RUN
DELTA-H= 2.30
**************
POINT NO. 35.
          78.00 STO 03
            .38 STO 01
                    RUN
DELTA-H= 1.91
**************
POINT NO. 36.
          79.00 STO 03
            .33 STO 01
                    RUN
DELTA-H= 1.66
**************
POINT NO. 37.
            .28 STO 01
          76.00 STO 02
          72.00 STO 03
                    RUN
DELTA-H= 1.40
**************
POINT NO. 38.
          77.00 STO 02
          71.00 STO 03
            .30 STO 01
                    RUN
DELTA-H= 1.49
**************
POINT NO. 39.
          73.00 STO 03
            .30 STO 01
                    RUN
DELTA-H= 1.90
**************
POINT NO. 40.
          76.00 STO 02
          77.00 STO 02
          76.00 STO 03
            .43 STO 01
                    RUN
DELTA-H= 2.16
**************
POINT NO. 41.
          79.00 STO 02
          78.00 STO 03
            .55 STO 01
                    RUN
DELTA-H= 2.77
**************
POINT NO. 42.
            .74 STO 01
                    RUN
DELTA-H= 3.72
**************
POINT NO. 43.
          80.00 STO 02
          81.00 STO 03
            .69 STO 01
                    RUN
DELTA-H= 3.48
**************
POINT NO. 44.
          82.00 STO 03
            .59 STO 01
                    RUN
DELTA-H= 2.98
**************
POINT NO. 45.
            .49 STO 01
                    RUN
DELTA-H= 2.48
**************
POINT NO. 46.
          79.00 STO 02
          81.00 STO 03
            .41 STO 01
                    RUN
DELTA-H= 2.07
**************
POINT NO. 47.
          80.00 STO 02
            .34 STO 01
                    RUN
DELTA-H= 1.72
**************
POINT NO. 48.
            .31 STO 01
                    RUN
DELTA-H= 1.56
**************
POINT NO. 49.
              0.00    RUN
END RUN=?
1=YES 0=NO
              1.00    RUN
**AVERAGES**
KV=15.195
THETER F=75.200
TSTACK F=77.750
PSTACK, IN HG=29.983
DELTA-H=2.223
DELTA-P=0.429

FINAL METER
VOL. FT3=?
            928.010    RUN
INITIAL=629.452
TIME, MIN=?
            360.000    RUN
SOURCE?
0=OTHER
1=BOILER
              0.000    RUN
% O2=?
             20.900    RUN
% CO2=?
              0.000    RUN
H2O WT KNOWN?
1=YES 0=NO
              1.000    RUN
WEIGH IMPS
THEN R/S
                       RUN
GRAMS H2O=?
             95.000    RUN
NTR VOL, DSCF=
                     295.134
1-BWS =
                       0.905
% H2O =
                         1.5
STACK GAS WET
MOL. WT, RS,
LB/LB MOL=
                      28.673
AVG STACK
VEL, FT/S =
                      37.214
STACK FLOW
ACFM =
                  20,865.813
DS, DSCFM =
                  27,197.586

ISOKIN % = 99.7
**END**
```


6	0.81		0.90	
7	0.84		0.917	
8	0.83		0.911	
9	0.80		0.894	
10	0.79		0.889	
11	0.82		0.906	
12	0.80		0.894	

18	0.79	-4.8	0.889	
19	0.85	-4.8	0.922	
20	0.85	-4.8	0.922	
21	0.80	-4.8	0.894	
22	0.76	-4.8	0.872	
23	0.75	-4.8	0.866	
24	0.71	-4.8	0.842	

AVERAGE VELOCITY HEAD $\Delta P = [(\Sigma\sqrt{\Delta P})/n]^2 =$ 0.722

AVERAGE STATIC PRESSURE $= (\Sigma P_{stat})/n =$ -4.8

AVERAGE CYCLONIC FLOW ANGLE $= (\Sigma\alpha)/n =$ N/A.

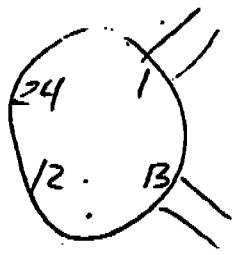

CHROMIUM EMISSION TEST
IMPINGER BOX SET UP & NOZZLE CALIBRATION SHEET

DATE: _____

AP CONTROLS: _____

BASE: NAD ALAMEDA

TEST SITE: INLET ND OUTLET N/A

BUILDING NO: 32

TEST RUN NO: G-MID-1

SOURCE ID: ANODIZE

IMPINGER BOX: 3 PREP BY: CKJ

[ ] 1. Initially wash all glassware as follows; detergent wash, deionized water rinse, 1:1 HNO3 solution soak, deionized water rinse, and 0.1N NaOH solution rinse. Sample recovery preps glassware for next use.

[ ] 2. Add 100ml 0.1N NaOH solution to the first two impingers (standard, modified impingers, respectively). Record initial weights.

[ ] 3. Leave the third impinger (modified) empty. Record initial weight.

[ ] 4. Fill the fourth impinger (modified) with indicating type silica gel. Record initial weight. If sampling time is > 6 hours, add a fifth silica gel impinger.

[ ] 5. Place Pallflex T60A20 teflon coated filter or equivalent into filter holder and install between the third and fourth impingers. Do not weigh or number the filter.

[ ] 6. Assemble impinger bottles and glass elbows (180s) so that air flows from a smaller to larger holes (if applicable). Do not grease balljoint fittings.

[ ] 7. Calibrate nozzle by measuring four IDs with a micrometer.

	Impinger No.	Contents	Initial	Final	Change
1	3-1	100 ml 0.1 N NaOH 484.0	588.6	602.8	14.2
2	3-2	100 ml 0.1 N NaOH 520.3	620.6	622.8	2.2
3	3-3	Empty	471.8	472.5	0.7
4	3-4	Silica Gel	761.2	778.0	17.6
5		Silica Gel			
	Note: Record weights as grams.			Net Weight Gain	34.7

Silica Gel Condition Before Test: Blue After Test: 50% spent

Nozzle No: _____ Calibrated by: _____

	0°	90°	45°	135°	Average
ID Before Test:	0.250	0.251	0.250	0.250	0.250
ID After Test:	0.249	0.251	0.251	0.250	0.250

Liq wt. 661.8 - 289.3 = 372.5 grams

7.5	22	31.5	41.5	51.5
719.33	732.21	741.68	751.68	761.79
100.9	98.8	98.4	99.5	99.8

CHROMIUM EMISSION TEST DATA SHEET

SITE INFORMATION	STACK GAS ESTIMATES	TEST SITE	DRY GAS METER	SAMPLING PROBE	NOZZLE	MISCELLANEOUS
Location: NAD, ALAMEDA, CA	Temperature, F: 69	Schematic of Stack Cross-Section & Traverse Points	DGM Box #: 16 N#449 / NEW 4424	Probe # (Pitot #): 5-20	Nozzle #: 1	Barometer P, in Hg: 29.98
Building: 32	Static Pressure, in H2O: -4.8		Gamma: 1.010	Pitot Coefficient: 0.84	Nozzle Dia, in: 0.250	Ambient T, F: 75
Operator: RWS	Velocity Head, in H2O: (Delta-P) 0.722		Delta-H@: 1.739	Probe Length, in.: 60	Ideal Nozzle Dia, in: 0.221	Impinger Box #: N#435
Date: 10 JUNE 92	Moisture Content, %: 2		DGM Inlet Temp, F: (Avg. Est.) 74	Probe Liner Material: GLASS	LEAK CHECK: INITIAL or FINAL	
Test #: 3 / RUN 1 G-MID-1	Wet MW, lb-lbmole: (Default 28.8)	Area, in2: 1,385.4 / Dia or L x W, in: 42		Probe Heater Setting, F: N/A	+ PITOT STEADY @ 8.8 in. H2O - PITOT STEADY @ 7.4 in. H2O SYSTEM 0.011 cfm @ 15 in. Hg	

Start or Stop Time	Traverse Point #	Sampling Time min	Dry Gas Meter Reading cf	Orifice Delta-H in. H2O	Delta-P in. H2O STO A	Stack Temp F (TC1) STO B	Temp. F @ DGM Inlet (TC6) STO C	Temp. F @ DGM Outlet (TC7)	Impinger Temp. F (TC8)	Filter Box Temp. F (TC3)	Sample Vacuum in. Hg	Stack Gas Analysis O2 %	CO2 %	CO ppm	NOx ppm	SO2 ppm
0923	1	0	713.100	2.16	0.55	69	72	72	62	N/A	4.2	20.9	0.0	0.0	0.0	0.0
	2	5		2.17	0.55	68	73	72	53	N/A	4.2	20.9	0.0	0.0	0.0	0.0
	3	10		2.54	0.64	67	76	72	54	N/A	4.9	20.9	0.0	0.0	0.0	0.0
	4	15		2.55	0.64	67	78	73	53	N/A	4.9	20.9	0.0	0.0	0.0	0.0
	5	20		2.87	0.72	67	79	73	53	N/A	5.1	20.9	0.0	0.0	0.0	0.0
	6	25		3.28	0.82	68	81	74	54	N/A	6.0	20.9	0.0	0.0	0.0	0.0
	7	30		3.42	0.85	68	84	75	55	N/A	6.0	20.9	0.0	0.0	0.0	0.0
	8	35		3.23	0.80	68	87	76	56	N/A	6.0	20.9	0.0	0.0	0.0	0.0
	9	40		3.08	0.76	68	88	77	57	N/A	5.8	20.9	0.0	0.0	0.0	0.0
	10	45		3.00	0.74	69	89	79	57	N/A	5.6	20.9	0.0	0.0	0.0	0.0
	11	50		3.00	0.74	69	89	79	58	N/A	5.6	20.9	0.0	0.0	0.0	0.0
	12	55		2.96	0.73	69	90	80	57	N/A	5.5	20.9	0.0	0.0	0.0	0.0
		60								N/A		20.9	0.0	0.0	0.0	0.0
Final DGM Volume:									Gas Analysis Averages:			20.9	0.0	0.0	0.0	0.0

Rev. 5/92

171.- 100.9 | 99.9 | 99.1 | 99.5 | 99.5 | 014.2 99.8 | 100.1

CHROMIUM EMISSION TEST DATA SHEET

SITE INFORMATION	STACK GAS ESTIMATES	TEST SITE	DRY GAS METER	SAMPLING PROBE	NOZZLE	MISCELLANEOUS
Location: UAD, ALAMEDA, CA	Temperature, F:	Schematic of Stack Cross-Section & Traverse Points	DGM Box #:	Probe # (Pitot #):	Nozzle #:	Barometer P, in Hg:
Building: 32	Static Pressure, in H2O:		Gamma:	Pitot Coefficient:	Nozzle Dia, in:	Ambient T, F:
Operator: RWS	Velocity Head, in H2O: (Delta-P)		Delta-H@:	Probe Length, in.:	Meas Nozzle Dia, in:	Impinger Box #:
Date: 10 JUNE 92	Moisture Content, %:		DGM Inlet Temp, F: (Avg. Est.)	Probe Liner Material: GLASS	LEAK CHECK: INITIAL or FINAL	
Test #: 3/RUN 1 9-MID-1	Wet MW, lb-lbmole: (Default 28.8)	Area, in2: / Dia or L x W, in:		Probe Heater Setting, F: N/A	+ PITOT STEADY @ 7.7 in. H2O	
					- PITOT STEADY @ 7.8 in. H2O	
					SYSTEM 0.017 cfm @ 8 in. Hg	

Start or Stop Time	Traverse Point #	Sampling Time min	Dry Gas Meter Reading cf	Orifice Delta-H in. H2O	Delta-P in. H2O (STG A)	Stack Temp F (TC1) (STG B)	Temp. F @ DGM Inlet (TC6) (STG C)	Temp. F @ DGM Outlet (TC7)	Impinger Temp. F (TC4)	Filter Box Temp. F (TC3)	Sample Vacuum in. Hg	Stack Gas Analysis O2 %	CO2 %	CO ppm	NOx ppm	SO2 ppm
1030	13	60		1.95	0.49	70	80	80	61	N/A	4.0	20.9	0.0	0.0	0.0	0.0
	14	65		2.24	0.56	69	83	80	51	N/A	4.1	20.9	0.0	0.0	0.0	0.0
1040	15	70		2.70	0.67	69	86	80	52	N/A	5.0	20.9	0.0	0.0	0.0	0.0
	16	75		2.91	0.72	69	88	81	52	N/A	5.2	20.9	0.0	0.0	0.0	0.0
PROBE 1055	17	80	~~792.570~~ 99.9	3.00	0.74	69	89	81	52	N/A	5.4	20.9	0.0	0.0	0.0	0.0
START 1337	18	85	792.570	3.24	0.82	67	73	73	51	N/A	6.0	20.9	0.0	0.0	0.0	0.0
	19	90		3.48	0.88	68	75	73	45	N/A	6.2	20.9	0.0	0.0	0.0	0.0
	20	95		3.42	0.86	68	79	74	49	N/A	6.2	20.9	0.0	0.0	0.0	0.0
	21	100		3.32	0.83	68	82	75	50	N/A	6.0	20.9	0.0	0.0	0.0	0.0
	22	105		3.17	0.79	68	83	75	51	N/A	6.0	20.9	0.0	0.0	0.0	0.0
	23	110		3.05	0.76	68	84	76	51	N/A	5.8	20.9	0.0	0.0	0.0	0.0
	24	115	100%	2.81	0.70	69	84	76	51	N/A	5.2	20.9	0.0	0.0	0.0	0.0
		120	827.999							N/A		20.9	0.0	0.0	0.0	0.0
Final DGM Volume:			119.999							Gas Analysis Averages:		20.9	0.0	0.0	0.0	0.0

Rev. 4/92

```
TEST=?
C MIN                RUN
RUN=?
            1.       RUN
FILTER=?
            0.       RUN
GAMMA=?
        1.010        RUN
DEL-H-AT=?
        1.739        RUN
CSUBP=?
         .840        RUN
T-METER=?
       74.000        RUN

STACK DATA
AREA, IN2=?
    1,385.400        RUN
PSTAT, IN H2O=?
       -4.000        RUN
PBAR, IN HG=?
       29.900        RUN
% H2O=?
        2.000        RUN
WET MOL WT
MS, LB/LBMOL=?
       28.800        RUN
AVG DELTA-P,
IN H2O=?
         .722        RUN
T-STACK, F=?
       69.000        RUN
STACK VEL.
FT/S = 48.045

FOR 0.75 CFM
IDEAL NOZ
DIA, IN. = 0.221

ACTUAL NOZ
DIA, IN=?
         .250        RUN

SAMPLE CFM = 0.957

INSTRUCTIONS

STO
 A = DELTA-P
 B = T-STACK
 C = T-METER
R/S

TO FIX ERROR
STO -A -B -C
R/S

TO CHECK ISO:
500, R/S

TO END RUN:
0, R/S

INIT MTR
VOL, FT3=?
      713.100        RUN
**************
POINT NO. 1.
              .55 STO 01
            69.00 STO 02
            72.00 STO 03
                      RUN

DELTA-H= 2.16
**************
POINT NO. 2.
            68.00 STO 02
            73.00 STO 03
                      RUN

DELTA-H= 2.17
**************
POINT NO. 3.
              .64 STO 01
            67.00 STO 02
            76.00 STO 03
                      RUN

DELTA-H= 2.54
**************
POINT NO. 4.
            70.00 STO 03
                      RUN

DELTA-H= 2.55
**************
POINT NO. 5.
              .72 STO 01
            79.00 STO 03
                      RUN

DELTA-H= 2.87
**************
POINT NO. 6.
              .82 STO 01
            68.00 STO 02
            81.00 STO 03
                      RUN

DELTA-H= 3.20
**************
POINT NO. 7.
              .85 STO 01
            84.00 STO 03
                      RUN

DELTA-H= 3.42
**************
POINT NO. 8.
              .90 STO 01
            87.00 STO 03
                      RUN

DELTA-H= 3.23
**************
POINT NO. 9.
              .76 STO 01
            88.00 STO 03
                      RUN

DELTA-H= 3.08
**************
POINT NO. 10.
              .74 STO 01
            69.00 STO 02
            89.00 STO 03
                      RUN

DELTA-H= 3.00
**************
POINT NO. 11.
                      RUN

DELTA-H= 3.00
**************
POINT NO. 12.
              .73 STO 01
            90.00 STO 03
                      RUN

DELTA-H= 2.96
**************
POINT NO. 13.
              .49 STO 01
            70.00 STO 02
            81.00 STO 03
                      RUN

DELTA-H= 1.95
**************
POINT NO. 14.
              .56 STO 01
            69.00 STO 02
            83.00 STO 03
                      RUN

DELTA-H= 2.24
**************
POINT NO. 15.
              .67 STO 01
            86.00 STO 03
                      RUN

DELTA-H= 2.70
**************
POINT NO. 16.
              .72 STO 01
            88.00 STO 03
                      RUN

DELTA-H= 2.91
**************
POINT NO. 17.
              .74 STO 01
            89.00 STO 03
                      RUN

DELTA-H= 3.00
**************
POINT NO. 18.
              .82 STO 01
            67.00 STO 02
            73.00 STO 03
                      RUN

DELTA-H= 3.24
**************
POINT NO. 19.
              .88 STO 01
            68.00 STO 02
            75.00 STO 03
                      RUN

DELTA-H= 3.49
**************
POINT NO. 20.
              .86 STO 01
            79.00 STO 03
                      RUN

DELTA-H= 3.42
**************
POINT NO. 21.
              .83 STO 01
            82.00 STO 03
                      RUN

DELTA-H= 3.32
**************
POINT NO. 22.
              .79 STO 01
            83.00 STO 03
                      RUN

DELTA-H= 3.17
**************
POINT NO. 23.
              .76 STO 01
            84.00 STO 03
                      RUN

DELTA-H= 3.05
**************
POINT NO. 24.
              .70 STO 01
            69.00 STO 02
                      RUN

DELTA-H= 2.81
**************
POINT NO. 25.
            0.00      RUN
END RUN=?
1=YES 0=NO
            1.00      RUN
**OVERRIDES**
KV=19.494
TMETER F=82.200
TSTACK F=68.292
PSTACK, IN HG=29.627
DELTA-H=2.897
DELTA-P=0.719

FINAL METER
VOL, FT3=?
      827.999         RUN
INITIAL=713.100
TIME, MIN=?
      120.000         RUN

SOURCE?
0=OTHER
1=BOILER
            0.000     RUN
% O2=?
           20.900     RUN
% CO2=?
            0.000     RUN
H2O WT KNOWN?
1=YES 0=NO
            1.000     RUN
WEIGH IMPS
THEN R/S
                      RUN
GRAMS H2O=?
           34.700     RUN

MTR VOL, DSCF=
                114.031
1-BWS =
                  0.986
% H2O =
                    1.4
STACK GAS WET
MOL. WT. MS.
LB/LB MOL=
                 28.693
AVG STACK
VEL, FT/S =
                 48.822
STACK FLOW
ACFM =
            27,720.743
DS, DSCFM =
            27,044.900

ISOKIN % = 99.2
**END**
```

TANK LOAD DATA SHEET

DATE: 8 June 92

TEST RUN NO: _____

TEST RUN NO: _____

TEST RUN NO: _____

TEST RUN NO: _____

TEST RUN NO: _____

TEST RUN NO: _____

PROCESS DESCRIPTION

Tank Number	L-1	L-2	L-3	L-4	
Process	Cr plate				
Temperature	140°F	128°	130	—	
Agitation	✓	✓			
Fume Suppressant	No				
Ventilation System Performance					
Load Surface Area					
Comments	Bldg 32 NAD Alameda 1-4 884.3 grams — 60% spent 2-4 905.6 — 60% spent				

TANK LOAD DATA SHEET (CONTINUED)

TANK NUMBER	L-1	L-2	L-3	L-4	
TIME (INIT)	AMPERES AND OR AMPERE-HOURS				
0900	1510 / 442450	2500 / 747120	500 / 838 / 22350	1510 / 300030	
0935	1510 / 443385	2500 / 748670	500 / 25707	1500 / 309170	
1000	1510 / 444006	2490 / 749715	500 / 27230	1510 / 315290	
1030	1510 / 444680	2500 / 750838	500 / 29406	1500 / 322000	
1100	1510 / 445439	2500 / 752111	500 / 31884	1500 / 329690	
1130	1510 / 446180	2490 / 753355	500 / 34290	1510 / 337160	
1215	1510 / 447280	2490 / 755190	500 / 37870	1510 / 348200	
1300	1510 / 448480	2490 / 757200	500 / 41774	1500 / 360290	
1330	1510 / 449140	2490 / 758700	500 / 43900	1500 / 366900	
1400	1510 / 449868	2500 / 759510	500 / 46260	1500 / 374190	
1500	1500 / 451330	2490 / 761950	500 / 50990	1510 / 388860	
1530	1510 / 452070	2500 / 763190	500 / 53390	1500 / 396300	
1600	1510 / 452830	2490 / 764439	510 / 55834	1500 / 403830	
1630	1510 / 453597	2490 / 765733	500 / 58343	1500 / 411580	
1700	1510 / 454290	2500 / 766888	500 / 60590	1500 / 418520	
1730	1510 / 454980	2500 / 768040	500 / 62810	1500 / 425350	
1800	1510 / 455810	2490 / 769428	500 / 65525	1500 / 433730	
1835	1510 / 456640	2490 / 770770	500 / 68149	1500 / 441860	
1900	1510 / 457250	2490 / 771835	510 / 70185	1500 / 448150	

imp / Amp Hr

937

1337

2:55

~~201~~ 839325 / 25434

19 Big	1 plate 6 Big	0-25	12 big	16 Big
5 Sm	2 Sm		6 Small	6 Sm

PRELIMINARY VELOCITY TRAVERSE DATA SHEET

DATE: 6/6/92 READ BY: DAM	DISTURB	DISTANCE A: 0.5 ft/dia	
BASE: NAD ALAMEDA	TEST SITE	DISTANCE B: 2.0 ft/dia	
BUILDING NO: 32		TRAVERSE PTS REQ'D: 24	
SOURCE ID: LINE L HARD CHROME		TRAVERSE PTS USED, n: 24	
AP CONTROLS: WET SCRUBBER FIBER-BED FILTER		CIRCULAR DIAMETER: 48 in	
TEST SITE: INLET (OUTLET) N/A	DISTURB	RECTANGULAR L x W: —— in	

	STACK PRESSURES (inches H_2O) ΔP_{vel}	P_{stat}	P_{STAT} $\sqrt{\Delta P}$	CYCLONIC FLOW $\lvert\alpha\rvert$°
1	0.26	0.510	-0.13	5
2	0.29	0.539	-0.14	5.5
3	0.33	0.574	-0.16	2.5
4	0.40	0.632	-0.20	0
5	0.50	0.707	-0.23	0.5
6	0.62	0.787	-0.28	2.5
7	0.66	0.812	-0.24	1.5
8	0.55	0.742	-0.22	2.5
9	0.44	0.663	-0.19	2.5
10	0.38	0.616	-0.18	3.5
11	0.33	0.574	-0.16	4.5
12	0.31	0.557	-0.16	6.5

	STACK PRESSURES (inches H_2O) ΔP_{vel}	P_{stat}	$\sqrt{\Delta P}$	CYCLONIC FLOW $\lvert\alpha\rvert$°
13	0.34	-0.17	0.583	—
14	0.37	-0.18	0.608	—
15	0.39	-0.19	0.624	—
16	0.49	-0.20	0.700	—
17	0.59	-0.24	0.768	—
18	0.68	-0.27	0.825	—
19	0.53	-0.26	0.728	—
20	0.42	-0.21	0.648	—
21	0.30	-0.21	0.548	—
22	0.26	-0.17	0.510	—
23	0.20	-0.14	0.447	—
24	0.19	-0.12	0.436	—

AVERAGE VELOCITY HEAD $\Delta P = [(\Sigma\sqrt{\Delta P})/n]^2 =$ 0.398

AVERAGE STATIC PRESSURE $= (\Sigma P_{stat})/n =$ -0.194

AVERAGE CYCLONIC FLOW ANGLE $= (\Sigma\alpha)/n =$ 3.2°

CHROMIUM EMISSION TEST

BLACK

IMPINGER BOX SET UP & NOZZLE CALIBRATION SHEET

DATE: 6/8/92

AP CONTROLS: WET SCRUBBER FIBER BED FILTER

BASE: NAD ALAMEDA

TEST SITE: INLET (OUTLET) N/A

BUILDING NO: 32

TEST RUN NO: L-OUT-1

SOURCE ID: LINE 4 HARD CHROME

IMPINGER BOX: 1 PREP BY: [illegible]

[✓] 1. Initially wash all glassware as follows; detergent wash, deionized water rinse, 1:1 HNO3 solution soak, deionized water rinse, and 0.1N NaOH solution rinse. Sample recovery preps glassware for next use.

[✓] 2. Add 100ml 0.1N NaOH solution to the first two impingers (standard, modified impingers, respectively). Record initial weights.

[✓] 3. Leave the third impinger (modified) empty. Record initial weight.

[✓] 4. Fill the fourth impinger (modified) with indicating type silica gel. Record initial weight. If sampling time is > 6 hours, add a fifth silica gel impinger.

[✓] 5. Place Pallflex T60A20 teflon coated filter or equivalent into filter holder and install between the third and fourth impingers. Do not weigh or number the filter.

[✓] 6. Assemble impinger bottles and glass elbows (180s) so that air flows from a smaller to larger holes (if applicable). Do not grease balljoint fittings.

[✓] 7. Calibrate nozzle by measuring four IDs with a micrometer.

	Impinger No.	Contents	TARE	Initial	Final	Change
1	1-1	100 ml 0.1 N NaOH	452.3	542.9	614.8	71.9
2	1-2	100 ml 0.1 N NaOH	452.1	538.3	547.3	9
3	1-3	Empty	452.1	452.2	458.3	6.1
4	1-4	Silica Gel	467.2	844.4	884.3	39.9
5	1-5	Silica Gel	512.1	884.5	926.6	42.1
					Net Weight Gain	169

Note: Record weights as grams.

Silica Gel Condition Before Test: NEW After Test: _____

Nozzle No: P#7 Calibrated by: [illegible]

	0°	90°	45°	135°	Average
ID Before Test:	0.272	0.274	0.272	0.275	0.273
ID After Test:	.273	.274	0.273	.0274	0.273

TOTAL LIQ = 625.5 − 286.9 = 338.6 grams

AVG DELTA H ≈ 2.37 SO
USE DELTA H @ ≈ 2" H2O D1

1ST TRAVERSE PORTA

CHROMIUM EMISSION TEST DATA SHEET

SITE INFORMATION	STACK GAS ESTIMATES	TEST SITE	DRY GAS METER	SAMPLING PROBE	NOZZLE	MISCELLANEOUS
Location: NAD ALAMEDA	Temperature, F: 70	Schematic of Stack Cross-Section & Traverse Points	DGM Box #: 17	Probe # (Pitot #): SN-P3	Nozzle #: P#7	Barometer P, in Hg: 30.0
Building: 32	Static Pressure, in H2O: -0.2	1ST TRAV A, 2nd B TRAV	Gamma: 1.001	Pitot Coefficient: 0.84	Nozzle Dia, in: 0.273	Ambient T, F: 70
Operator: [illegible]	Velocity Head, in H2O: 0.30 (Delta-P) ~~0.40~~		Delta-H@: 1.773	Probe Length, in.: 60	Ideal Nozzle Dia, in: GET FROM THE	Impinger Box #: 1
Date: 6/8/92	Moisture Content, %: 2		DGM Inlet Temp, F: (Avg. Est.) 85	Probe Liner Material: GLASS	LEAK CHECK: (INITIAL) or FINAL	
Test #: L-OUT-1	Wet MW, lb-lbmole: (Default 28.8) 28.8	Area, in2: 1810	Dia or L x W, in: 48	Probe Heater Setting, F: N/A	+ PITOT PASS SECTION @ 4.7 in. H2O	
					- PITOT PASS SECTION @ 6.3 in. H2O	
					SYSTEM 0.004 cfm @ 21 in. Hg	

Start Traverse second START

Start or Stop Time	Traverse Point #	Sampling Time min	Dry Gas Meter Reading cf	Orifice Delta-H in. H2O	Delta-P in. H2O (STO A)	Stack Temp F (TC1) (STO B)	Temp. F @ DGM Inlet (TC6) (STO C)	Temp. F @ DGM Outlet (TC7)	Impinger Temp. F (TC4)	Filter Box Temp. F (TC3)	Sample Vacuum in. Hg	Stack Gas Analysis O2 %	CO2 %	CO ppm	NOx ppm	SO2 ppm
9:43	1	0	873.462	1.43	0.25	71	70	73	43	N/A	3.9	20.9	0.0	0.0	0.0	0.0
	2	20	886.92	1.73	0.30	71	75	71	44	N/A	4.0	20.9	0.0	0.0	0.0	0.0
	3	40	901.9	1.97	0.34	71	78	72	46	N/A	4.8	20.9	0.0	0.0	0.0	0.0
	4	60	917.66	2.19	0.375	72	83	75	47	N/A	5.0	20.9	0.0	0.0	0.0	0.0
	5	80	934.53	2.72	0.46	72	89	81	47	N/A	6.0	20.9	0.0	0.0	0.0	0.0
	6	100	953.35	3.54	0.60	72	89	83	47	N/A	7.5	20.9	0.0	0.0	0.0	0.0
	7	120	974.75	3.75	0.63	72	93	85	48	N/A	8.0	20.9	0.0	0.0	0.0	0.0
	8	140	996.84	3.09	0.52	72	93	86	50	N/A	7.0	20.9	0.0	0.0	0.0	0.0
	9	160	1017.1	2.61	0.44	72	92	86	50	N/A	6.0	20.9	0.0	0.0	0.0	0.0
	10	180	1035.68	2.30	.39	73	90	85	51	N/A	5.3	20.9	0.0	0.0	0.0	0.0
	11	200	1053.04	2.07	.35	70	88	83	50	N/A	4.8	20.9	0.0	0.0	0.0	0.0
	12	220	1069.41	2.00	.34	70	86	82	50	N/A	4.8	20.9	0.0	0.0	0.0	0.0
13:43		240	1085.47							N/A		20.9	0.0	0.0	0.0	0.0
Final DGM Volume:			1085.47							Gas Analysis Averages:		20.9	0.0	0.0	0.0	0.0

Rev. 5/92

AFTER LEAK CHECK 1088.26
85.47
Δ 2.79

0.005 CFM @ 9.0 in Hg Leak post passed
REPLACED SILICA IMPINGER WITH NEW IMPINGER

L-out-1

```
1/92
CLR FLAGS

TEST=?
L OUT
                RUN

RUN=?
          1.    RUN

FILTER=?
          0.    RUN

GAMMA=?
      1.001 ENTER?
      1.001     RUN

DEL-H-AT=?
      1.773     RUN

CSUBP=?
       .840     RUN

T-METER=?
     85.000     RUN

STACK DATA
AREA, IN2=?
   1.810.000    RUN
PSTAT, IN H2O=?
       -.200    RUN
PBAR, IN HG=?
     30.000     RUN
% H2O=?
      2.000     RUN
WET MOL WT
MS. LB/LBMOL=?
     28.000     RUN
AVG DELTA-P,
IN H2O=?
       .398     RUN
T-STACK, F=?
     70.000     RUN
STACK VEL,
FT/S = 35.491

FOR 0.75 CFM
IDEAL NOZ
DIA. IN. = 0.254

ACTUAL NOZ
DIA. IN=?
       .273     RUN

SAMPLE CFM = 0.068

INSTRUCTIONS

STO
 A = DELTA-P
 B = T-STACK
 C = T-METER
R/S

TO FIX ERROR
STO -A -B -C
R/S

TO CHECK ISO:
500, R/S

TO END RUN:
0, R/S

INIT MTR
VOL, FT3=?
     873.462    RUN
**************
POINT NO. 1.
          70.00 STO 03
          71.00 STO 02
            .25 STO 01
                RUN
DELTA-H= 1.43
**************
POINT NO. 2.
          75.00 STO 03
            .38 STO 01
                RUN
DELTA-H= 1.73
**************
POINT NO. 3.
          78.00 STO 03
            .34 STO 01
                RUN
DELTA-H= 1.97
**************
POINT NO. 4.
          83.00 STO 03
          72.00 STO 02
           .375 STO 01
                RUN
DELTA-H= 2.19
**************
POINT NO. 5.
          89.00 STO 03
            .46 STO 01
                RUN
DELTA-H= 2.72
**************
POINT NO. 6.
            .60 STO 01
                RUN
DELTA-H= 3.54
**************
POINT NO. 7.
          93.00 STO 03
            .63 STO 01
                RUN
DELTA-H= 3.75
**************
POINT NO. 8.
            .52 STO 01
                RUN
DELTA-H= 3.09
**************
POINT NO. 9.
          92.00 STO 03
            .44 STO 01
                RUN
DELTA-H= 2.61
**************
POINT NO. 10.
          90.00 STO 03
          73.00 STO 02
            .39 STO 01
                RUN
DELTA-H= 2.30
**************
POINT NO. 11.
          88.00 STO 03
          70.00 STO 02
            .35 STO 01
                RUN
DELTA-H= 2.07
**************
POINT NO. 12.
          86.00 STO 03
            .34 STO 01
                RUN
DELTA-H= 2.00
**************
POINT NO. 13.
          69.00 STO 02
          73.00 STO 03
            .35 STO 01
                RUN
DELTA-H= 2.02
**************
POINT NO. 14.
          75.00 STO 03
            .37 STO 01
                RUN
DELTA-H= 2.14
**************
POINT NO. 15.
          78.00 STO 03
            .43 STO 01
                RUN
DELTA-H= 2.58
**************
POINT NO. 16.
          79.00 STO 03
            .51 STO 01
                RUN
DELTA-H= 2.97
**************
POINT NO. 17.
            .58 STO 01
                RUN
DELTA-H= 3.30
**************
POINT NO. 18.
          78.00 STO 02
            .71 STO 01
                RUN
DELTA-H= 4.13
**************
POINT NO. 19.
          69.00 STO 01
            .62 STO 01
          69.00 STO 02
                RUN
DELTA-H= 3.61
**************
POINT NO. 20.
          70.00 STO 02
            .48 STO 01
                RUN
DELTA-H= 2.79
**************
POINT NO. 21.
          78.00 STO 03
            .38 STO 01
                RUN
DELTA-H= 2.21
**************
POINT NO. 22.
          71.00 STO 02
          70.00 STO 03
            .30 STO 01
                RUN
DELTA-H= 1.74
**************
POINT NO. 23.
          77.00 STO 03
          70.00 STO 02
            .20 STO 01
                RUN
DELTA-H= 1.62
**************
POINT NO. 24.
            .21 STO 01
                RUN
DELTA-H= 1.22
**************
POINT NO. 25.
            0.00    RUN
END RUN=?
1=YES 0=NO
            1.00    RUN
**OVERRIDES**
KV=14.056
TMETER F=81.542
TSTACK F=70.542
PSTACK, IN HG=29.985
DELTA-H=2.489
DELTA-P=0.416

FINAL METER
VOL, FT3=?
     1,297.623      RUN
INITIAL=873.462
TIME, MIN=?
       480.000      RUN
SOURCE?
0=OTHER
1=BOILER
            0.000   RUN
% O2=?
       20.900       RUN
% CO2=?
        0.000       RUN
H2O WT KNOWN?
1=YES 0=NO
        1.000       RUN
WEIGH IMPS
THEN R/S
      169.000       RUN
GRAMS H2O=?
      169.000       RUN

MTR VOL, DSCF=
          417.582
1-BWS =
            0.981
% H2O =
              1.9
STACK GAS WET
MOL. WT. MS.
LB/LB MOL=
           28.633
AVG STACK
VEL. FT/S =
           36.485
STACK FLOW
ACFM =
       27,457.901
QS. DSCFM =
       26,872.116

ISOKIN % = 100.2
**END**
```

DUCT TAPE

CHROMIUM EMISSION TEST

IMPINGER BOX SET UP & NOZZLE CALIBRATION SHEET

DATE: 6/8/92

AP CONTROLS: Wet Scrubber Reco Filter

BASE: NAD Alameda

TEST SITE: INLET (OUTLET) N/A

BUILDING NO: 32

TEST RUN NO: 4-OUT-2

SOURCE ID: 4-Hard chrome

IMPINGER BOX: 2 PREP BY: BH

[✓] 1. Initially wash all glassware as follows; detergent wash, deionized water rinse, 1:1 HNO3 solution soak, deionized water rinse, and 0.1N NaOH solution rinse. Sample recovery preps glassware for next use.

[✓] 2. Add 100ml 0.1N NaOH solution to the first two impingers (standard, modified impingers, respectively). Record initial weights.

[✓] 3. Leave the third impinger (modified) empty. Record initial weight.

[✓] 4. Fill the fourth impinger (modified) with indicating type silica gel. Record initial weight. If sampling time is > 6 hours, add a fifth silica gel impinger.

[✓] 5. Place Pallflex T60A20 teflon coated filter or equivalent into filter holder and install between the third and fourth impingers. Do not weigh or number the filter.

[✓] 6. Assemble impinger bottles and glass elbows (180s) so that air flows from a smaller to larger holes (if applicable). Do not grease balljoint fittings.

[✓] 7. Calibrate nozzle by measuring four IDs with a micrometer.

	Impinger No.	Contents	Tare	Initial	Final	Change
1	2-1	100 ml 0.1 N NaOH	452.3	531.8	601.4	69.6
2	2-2	100 ml 0.1 N NaOH	443.0	531.9	545.5	13.6
3	2-3	Empty	8	498.8	503.3	4.5
4	2-4	Silica Gel	498.8	867.0	905.6	38.6
5	2-5	Silica Gel		831.0	872.3	41.3
					Net Weight Gain	167.6

Note: Record weights as grams.

Silica Gel Condition Before Test: NEW After Test: 2-5 50%

Nozzle No: B-1 Calibrated by: BH

	0°	90°	45°	135°	Average
ID Before Test:	.277	.277	.276	.276	.277
ID After Test:	.276	.277	.276	.277	.277

TOTAL LIQ = 674.4 − 286.9 = 387.5 grams

2nd TRAVERSE PORT A

.004
.007

CHROMIUM EMISSION TEST DATA SHEET

SITE INFORMATION	STACK GAS ESTIMATES	TEST SITE	DRY GAS METER	SAMPLING PROBE	NOZZLE	MISCELLANEOUS
Location: NAD ALAMEDA	Temperature, F:	Schematic of Stack Cross-Section & Traverse Points	DGM Box #:	Probe # (Pitot #):	Nozzle #:	Barometer P, in Hg:
Building: 32	Static Pressure, in H2O:		Gamma:	Pitot Coefficient:	Nozzle Dia, in:	Ambient T, F:
Operator: JC & BH	Velocity Head, in H2O: (Delta-P)		Delta-H@:	Probe Length, in.:	Ideal Nozzle Dia, in:	Impinger Box #:
Date: 6/8/82	Moisture Content, %:		DGM Inlet Temp, F: (Avg. Est.)	Probe Liner Material: GLASS	LEAK CHECK: INITIAL or FINAL	
Test #: L-OUT-2	Wet MW, lb-lbmole: (Default 28.8)	Area, in2: / Dia or L x W, in:		Probe Heater Setting, F: N/A	+ PITOT Passed @ 5.2 in. H2O	
					- PITOT Passed @ 5.2 in. H2O	
					SYSTEM - 003 cfm @ 9.0 in. Hg	

PART 2nd

Start or Stop Time	Traverse Point #	Sampling Time min	Dry Gas Meter Reading cf *	Orifice Delta-H in. H2O	Delta-P in. H2O STO A	Stack Temp F (TC1) STO B	Temp. F @ DGM Inlet (TC6) STO C	Temp. F @ DGM Outlet (TC7)	Impinger Temp. F (TC4)	Filter Box Temp. F (TC3)	Sample Vacuum in. Hg	Stack Gas Analysis O2 %	CO2 %	CO ppm	NOx ppm	SO2 ppm
2:35	1	240	1004.647	1.53	.25	69	78	71	50	N/A	3.3	20.9	0.0	0.0	0.0	0.0
	2	260	1018.69	1.73	.28	69	74	71	46	N/A	3.7	20.9	0.0	0.0	0.0	0.0
	3	280	1033.70	2.05	.33	69	78	72	47	N/A	4.0	20.9	0.0	0.0	0.0	0.0
	4	300	1049.9	2.55	.41	69	79	73	48	N/A	4.4	20.9	0.0	0.0	0.0	0.0
	5	320	1067.9	2.99	.48	69	80	73	48	N/A	5.0	20.9	0.0	0.0	0.0	0.0
	6	340	1085.7	3.79	.61	70	79	73	47	N/A	7.2	20.9	0.0	0.0	0.0	0.0
	7	360	1107.6	3.99	.64	69	80	73	47	N/A	7.9	20.9	0.0	0.0	0.0	0.0
	8	380	1130.2	3.49	.56	69	80	74	48	N/A	7.0	20.9	0.0	0.0	0.0	0.0
	9	400	1151.5	2.99	.48	69	80	73	49	N/A	6.0	20.9	0.0	0.0	0.0	0.0
	10	420	1171.3	2.55	.41	70	80	74	48	N/A	5.0	20.9	0.0	0.0	0.0	0.0
	11	440	1189.6	2.30	.37	70	80	73	48	N/A	4.7	20.9	0.0	0.0	0.0	0.0
	12	460	1207.6	2.06	.33	68	79	74	46	N/A	4.0	20.9	0.0	0.0	0.0	0.0
		480	1223.3							N/A		20.9	0.0	0.0	0.0	0.0
Final DGM Volume:			1222.60								Gas Analysis Averages:	20.9	0.0	0.0	0.0	0.0

Rev. 6/92

1130.2

1004.647
1003.98
.757

1715.20
.74
1214.46
8.9000

1223.356

1074.100

* True meter reading is less .757

1ST TRAVERSE PORT B

CHROMIUM EMISSION TEST DATA SHEET

SITE INFORMATION	STACK GAS ESTIMATES	TEST SITE	DRY GAS METER	SAMPLING PROBE	NOZZLE	MISCELLANEOUS
Location: NAD ALAMEDA	Temperature, F: 70	Schematic of Stack Cross-Section & Traverse Points	DGM Box #: 18	Probe # (Pitot #): SN-2	Nozzle #: B#1	Barometer P, in Hg: 30.00
Building: 32	Static Pressure, in H2O: -0.2	2nd A TRAV	Gamma: 0.994	Pitot Coefficient: 0.84	Nozzle Dia, in: 0.277	Ambient T, F: 66
Operator: BH &	Velocity Head, in H2O: (Delta-P) 0.398	13 1 12 24 1ST TRAV B	Delta-H@: 1.786	Probe Length, in.: 60	Ideal Nozzle Dia, in: GET FROM LAB .254	Impinger Box #: 2
Date: 6/8/92	Moisture Content, %: 2		DGM Inlet Temp, F: (Avg. Est.) 85	Probe Liner Material: GLASS	LEAK CHECK: INITIAL or FINAL + PITOT pass steady @ 7.4 in. H2O - PITOT pass steady @ 6.8 in. H2O	
Test #: L-00T-2	Wet MW, lb-lbmole: (Default 28.8) 28.8	Area, in2: 1810 Dia or L x W, in: 48		Probe Heater Setting, F: N/A	SYSTEM .006 cfm @ 20 in. Hg	

START FIRST

Start or Stop Time	Traverse Point #	Sampling Time min	Dry Gas Meter Reading cf	Orifice Delta-H in. H2O	Delta-P in. H2O (STO A)	Stack Temp F (TC1) (STO B)	Temp. F @ DGM Inlet (TC2) (STO C)	Temp. F @ DGM Outlet (TC7)	Impinger Temp. F (TC4)	Filter Box Temp. F (TC3)	Sample Vacuum in. Hg	Stack Gas Analysis O2 %	CO2 %	CO ppm	NOx ppm	SO2 ppm
9:37	13	0	795.118	2.00	.33	70	66	67	46	N/A	3.8	20.9	0.0	0.0	0.0	0.0
	14	20	810.92	2.10	.34	"	76	68	48	N/A	4.0	20.9	0.0	0.0	0.0	0.0
	15	40	827.15	2.42	.39	69	78	71	49	N/A	4.8	20.9	0.0	0.0	0.0	0.0
	16	60	844.99	2.75	.44	70	83	75	47	N/A	5.2	20.9	0.0	0.0	0.0	0.0
	17	80	863.79	3.47	.55	71	89	79	47	N/A	6.3	20.9	0.0	0.0	0.0	0.0
	18	100	884.96	3.98	.63	71	89	80	47	N/A	7.5	20.9	0.0	0.0	0.0	0.0
	19	120	908.14	3.42	.54	71	90	82	48	N/A	6.7	20.9	0.0	0.0	0.0	0.0
	20	140	929.15	2.48	.39	71	92	84	49	N/A	5.0	20.9	0.0	0.0	0.0	0.0
	21	160	947.38	1.77	.28	72	91	84	50	N/A	3.8	20.9	0.0	0.0	0.0	0.0
	22	180	962.95	1.51	.24	72	88	83	49	N/A	3.2	20.9	0.0	0.0	0.0	0.0
	23	200	977.17	1.38	.22	72	86	82	48	N/A	2.9	20.9	0.0	0.0	0.0	0.0
	24	220	990.59	1.19	.19	72	84	80	47	N/A	2.9	20.9	0.0	0.0	0.0	0.0
		240	1003.98							N/A		20.9	0.0	0.0	0.0	0.0
Final DGM Volume:			1003.98							Gas Analysis Averages:		20.9	0.0	0.0	0.0	0.0

Rev. 6/92

These are for the replacement of silica gel impinger.

.006 (10 in Hg) Leak check Pre Passed

.007 (9 in Hg) Leak check Post Passed

```
                GTO .001
                     RUN
1/92
CLR FLAGS

TEST=?
L OUT                RUN
RUN=?
              2.     RUN
FILTER=?
              0.     RUN
GAMMA=?
           .994      RUN
DEL-H-AT=?
          1.786      RUN
CSUBP=?
           .840      RUN
T-METER=?
         85.000      RUN

STACK DATA
AREA, IN2=?
      1,810.000      RUN
PSTAT, IN H2O=?
           -.200     RUN
PBAR, IN HG=?
         30.000      RUN
% H2O=?
          1.900      RUN
WET MOL WT
MS, LB/LBMOL=?
         28.000      RUN
AVG DELTA-P,
IN H2O=?
           .398      RUN
T-STACK, F=?
         70.000      RUN
STACK VEL,
FT/S = 35.491

FOR 0.75 CFM
IDEAL NOZ
DIA, IN. = 0.254

ACTUAL NOZ
DIA, IN=?
           .277      RUN

SAMPLE CFM = 0.895

INSTRUCTIONS

STO
 A = DELTA-P
 B = T-STACK
 C = T-METER
R/S

TO FIX ERROR
STO -A -B -C
R/S
```

```
TO CHECK ISO:
500, R/S

TO END RUN:
0, R/S

INIT MTR
VOL, FT3=?
          795.118    RUN
**************
POINT NO. 1.
          66.00 STO 03
          70.00 STO 02
            .33 STO 01
                    RUN
DELTA-H= 2.00
**************
POINT NO. 2.
            .34 STO 01
          76.00 STO 03
                    RUN
DELTA-H= 2.10
**************
POINT NO. 3.
          69.00 STO 02
          78.00 STO 03
            .39 STO 01
                    RUN
DELTA-H= 2.43
**************
POINT NO. 4.
          83.00 STO 03
          70.00 STO 02
            .44 STO 01
                    RUN
DELTA-H= 2.76
**************
POINT NO. 5.
          71.00 STO 02
          89.00 STO 03
            .55 STO 01
                    RUN
DELTA-H= 3.40
**************
POINT NO. 6.
            .63 STO 01
          71.00 STO 02
          89.00 STO 03
                    RUN
DELTA-H= 3.98
**************
POINT NO. 7.
          71.00 STO 02
          90.00 STO 03
            .54 STO 01
                    RUN
DELTA-H= 3.42
**************
POINT NO. 8.
            .39 STO 01
                    RUN
```

```
DELTA-H= 2.47
**************
POINT NO. 9.
            -.39 STO 01
         -71.00 STO 02
         -90.00 STO 03
                    RUN
FIXING
DELTA-H= -2.47
**************
POINT NO. 8.
            .39 STO 01
         71.00 STO 02
         92.00 STO 03
                    RUN
DELTA-H= 2.48
**************
POINT NO. 9.
            .28 STO 01
         72.00 STO 02
         91.00 STO 03
                    RUN
DELTA-H= 1.77
**************
POINT NO. 10.
            .24 STO 01
         72.00 STO 02
         88.00 STO 03
                    RUN
DELTA-H= 1.51
**************
POINT NO. 11.
            .22 STO 01
         86.00 STO 03
                    RUN
DELTA-H= 1.38
**************
POINT NO. 12.
            .19 STO 01
         84.00 STO 03
                    RUN
DELTA-H= 1.19
**************
POINT NO. 13.
         70.00 STO 03
         69.00 STO 02
            .25 STO 01
                    RUN
DELTA-H= 1.53
**************
POINT NO. 14.
            .28 STO 01
         69.00 STO 02
         74.00 STO 03
                    RUN
DELTA-H= 1.73
**************
POINT NO. 15.
         70.00 STO 03
            .33 STO 01
                    RUN
```

```
DELTA-H= 2.05
**************
POINT NO. 16.
         79.00 STO 03
         69.00 STO 02
            .41 STO 01
                    RUN
DELTA-H= 2.56
**************
POINT NO. 17.
            .48 STO 01
         80.00 STO 03
         69.00 STO 02
                    RUN
DELTA-H= 3.00
**************
POINT NO. 18.
         70.00 STO 02
            .61 STO 01
         79.00 STO 03
                    RUN
DELTA-H= 3.79
**************
POINT NO. 19.
         80.00 STO 03
         69.00 STO 02
            .64 STO 01
                    RUN
DELTA-H= 4.00
**************
POINT NO. 20.
            .56 STO 01
                    RUN
DELTA-H= 3.50
**************
POINT NO. 21.
            .48 STO 01
                    RUN
DELTA-H= 3.00
**************
POINT NO. 22.
         70.00 STO 02
            .41 STO 01
                    RUN
DELTA-H= 2.56
**************
POINT NO. 23.
            .37 STO 01
                    RUN
DELTA-H= 2.31
**************
POINT NO. 24.
         68.00 STO 02
         79.00 STO 03
            .33 STO 01
                    RUN
DELTA-H= 2.06
**************
POINT NO. 25.
            0.00    RUN
```

```
END RUN=?
1=YES 0=NO
              1.00    RUN
**AVERAGES**
KV=14.433
TMETER F=81.292
TSTACK F=70.042
PSTACK, IN HG=29.985
DELTA-H=2.524
DELTA-P=0.393

FINAL METER
VOL, FT3=?
        1,222.680     RUN
INITIAL=795.118
TIME, MIN=?
          480.000     RUN
SOURCE?
0=OTHER
1=BOILER
            0.000     RUN
% O2=?
           20.900     RUN
% CO2=?
            0.000     RUN
H2O WT KNOWN?
1=YES 0=NO
            1.000     RUN
WEIGH IMPS
THEN R/S
                      RUN
GRAMS H2O=?
          167.600     RUN

MTR VOL, DSCF=
                  419.138
1-BWS =
                    0.981
% H2O =
                      1.9
STACK GAS WET
MOL. WT. MS,
LB/LB MOL=
                   28.635
AVG STACK
VEL, FT/S =
                   35.372
STACK FLOW
ACFM =
              26,676.116
QS, DSCFM =
              26,136.331

ISOKIN % = 100.2
**END**
```

PRELIMINARY VELOCITY TRAVERSE DATA SHEET

DATE: 6/6/92 READ BY:	DISTURB	DISTANCE A: 0.5 ft/dia	
BASE: NAD ALAMEDA	A	TEST SITE	DISTANCE B: 2.5 ft/dia
BUILDING NO: 32			TRAVERSE PTS REQ'D: 24
SOURCE ID: LINE 1 HARD CHROME			TRAVERSE PTS USED, n: 24
AP CONTROLS: WET SCRUBBER FIBER BED FILTER	B		CIRCULAR DIAMETER: 4.2 in
TEST SITE: ~~INLET OUTLET~~ N/A		DISTURB	RECTANGULAR L x W: in

MID

ΔP_{VEL}		STACK PRESSURES (inches H_2O) ΔP_{vel}	P_{stat}	$\sqrt{\Delta P}$	CYCLONIC FLOW $\lvert\alpha\rvert$°
.62	1	~~.68~~	4.75	.79	
.47	2	~~.49~~	4.50	.69	
.53	3	~~.58~~	4.55	.73	
.57	4	~~.60~~	4.58	.75	
.62	5	~~.65~~	4.60	.79	
.76	6	~~.76~~	4.60	.87	
.80	7	~~.79~~	4.65	.89	
.73	8	~~.68~~	4.60	.85	
.69	9	~~.69~~	4.65	.83	
.68	10	~~.70~~	4.65	.82	
.70	11	~~.69~~	4.60	.84	
.66	12	~~X~~	4.65	.81	

	STACK PRESSURES (inches H_2O) ΔP_{vel}	P_{stat}	$\sqrt{\Delta P}$	CYCLONIC FLOW $\lvert\alpha\rvert$°
13	.58		.76	
14	.44	4.50	.66	
15	.52		.72	
16	.55	4.58	.74	
17	.61		.78	
18	.73	4.60	.85	
19	.80		.89	
20	.77	4.65	.88	
21	.74		.86	
22	.71	4.65	.84	
23	.76	~~4.65~~	.87	
24	.69	4.65	.83	

AVERAGE VELOCITY HEAD $\Delta P = [(\Sigma\sqrt{\Delta P})/n]^2 =$ .65

AVERAGE STATIC PRESSURE $= (\Sigma P_{stat})/n =$ -4.6

AVERAGE CYCLONIC FLOW ANGLE $= (\Sigma\alpha)/n =$ ~

CHROMIUM EMISSION TEST

IMPINGER BOX SET UP & NOZZLE CALIBRATION SHEET

DATE: 6/8/92

AP CONTROLS: WET SCRUBBER FIBER BED FILTER

BASE: NAD ALAMEDA

TEST SITE: ~~INLET OUTLET N/A~~ MID

BUILDING NO: 32

TEST RUN NO: L-MID-1

SOURCE ID: LINE L HARD CHROME

IMPINGER BOX: 3 PREP BY: DM

[✓] 1. Initially wash all glassware as follows; detergent wash, deionized water rinse, 1:1 HNO3 solution soak, deionized water rinse, and 0.1N NaOH solution rinse. Sample recovery preps glassware for next use.

[✓] 2. Add 100ml 0.1N NaOH solution to the first two impingers (standard, modified impingers, respectively). Record initial weights.

[✓] 3. Leave the third impinger (modified) empty. Record initial weight.

[✓] 4. Fill the fourth impinger (modified) with indicating type silica gel. Record initial weight. If sampling time is > 6 hours, add a fifth silica gel impinger.

[✓] 5. Place Pallflex T60A20 teflon coated filter or equivalent into filter holder and install between the third and fourth impingers. Do not weigh or number the filter.

[✓] 6. Assemble impinger bottles and glass elbows (180s) so that air flows from a smaller to larger holes (if applicable). Do not grease balljoint fittings.

[✓] 7. Calibrate nozzle by measuring four IDs with a micrometer.

	Impinger No.	Contents	Initial	Final	Change
1	3-1	100 ml 0.1 N NaOH 483.2	563.1	578.0	14.9
2	3-2	100 ml 0.1 N NaOH 519.5	609.4	612.8	3.4
3	3-3	Empty 470.7	470.7	473.4	2.7
4	3-4	Silica Gel 451.5	720.5	753.4	32.9
5		Silica Gel			
	Note: Record weights as grams.			Net Weight Gain	53.9

Silica Gel Condition Before Test: NEW After Test: 75% USED

Nozzle No: ~~P#7~~ ~~0.233~~ P#7

Calibrated by: DM

ID Before Test: ~~0.272~~ ~~0.274~~ ~~0.275~~ ~~0.272~~ ~~0.273~~ 0.273

ID After Test: 0.233 (0°) 0.233 (90°) 0.233 (45°) 0.233 (135°) 0.233 (Average)

WRONG NOZZLE

TOTAL L4Q = 656.5 - 287.1 = 369.4 grams

287.98
1130
106%
TEST 1
RUN 1

15
103%

22
100%

.88
99.3%

3
100%

334
100.2%

CHROMIUM EMISSION TEST DATA SHEET

SITE INFORMATION	STACK GAS ESTIMATES	TEST SITE	DRY GAS METER	SAMPLING PROBE	NOZZLE	MISCELLANEOUS
Location: NAD ALAMEDA	Temperature, F: 70	Schematic of Stack Cross-Section & Traverse Points	DGM Box #: 16	Probe # (Pitot #): 5-20	Nozzle #: P#7	Barometer P, in Hg: 30.00
Building: 32	Static Pressure, in H2O: -4.60		Gamma: 1.010	Pitot Coefficient: 0.84	Nozzle Dia, in: 0.273	Ambient T, F: 64
Operator: RWS	Velocity Head, in H2O: (Delta-P) 0.65		Delta-H@: 1.739	Probe Length, in.: 60	Ideal Nozzle Dia, in:	Impinger Box #: 3
Date: 6/8/92	Moisture Content, %: 2		DGM Inlet Temp, F: (Avg. Est.) 85	Probe Liner Material: GLASS	LEAK CHECK: INITIAL or FINAL	
Test#: L-MID-1	Wet MW, lb-lbmole: (Default 28.8) 28.8	Area, in2: 1385.4	Dia or L x W, in: 42	Probe Heater Setting, F: N/A	+ PITOT STEADY @ 9.2 in. H2O	
					- PITOT STEADY @ 7.8 in. H2O	
					SYSTEM 0.005 cfm @ 24 in. Hg	

Start or Stop Time	Traverse Point #	Sampling Time min	Dry Gas Meter Reading cf	Orifice Delta-H in. H2O	Delta-P in. H2O STO A	Stack Temp F (TC1) STO B	Temp. F @ DGM Inlet (TC6) STO C	Temp. F @ DGM Outlet (TC7)	Impinger Temp. F (TC4)	Filter Box Temp. F (TC3)	Sample Vacuum in. Hg	Stack Gas Analysis O2 %	CO2 %	CO ppm	NOx ppm	SO2 ppm
0940	1	0	278.000	3.23	0.58	~~[illegible]~~	64	70	57	N/A	5.8	20.9	0.0	0.0	0.0	0.0
0946 0953 1003	2	5		3.03	0.54	61	66	65	53	N/A	5.5	20.9	0.0	0.0	0.0	0.0
	3	10		3.14	0.56	60	66	64	53	N/A	5.7	20.9	0.0	0.0	0.0	0.0
	4	15		3.39	0.60	61	70	65	56	N/A	6.0	20.9	0.0	0.0	0.0	0.0
	5	20		3.75	0.66	60	73	66	59	N/A	6.5	20.9	0.0	0.0	0.0	0.0
	6	25		4.45	0.78	60	74	67	62	N/A	7.8	20.9	0.0	0.0	0.0	0.0
	7	30		4.92	0.86	60	76	68	65	N/A	8.8	20.9	0.0	0.0	0.0	0.0
	8	35		4.40	0.77	61	77	69	68	N/A	7.8	20.9	0.0	0.0	0.0	0.0
	9	40		4.07	0.71	60	77	69	66	N/A	7.0	20.9	0.0	0.0	0.0	0.0
	10	45		3.97	0.69	59	78	70	65	N/A	7.0	20.9	0.0	0.0	0.0	0.0
	11	50		3.96	0.69	60	78	70	63	N/A	7.0	20.9	0.0	0.0	0.0	0.0
	12	55		3.84	0.67	61	78	71	57	N/A	6.8	20.9	0.0	0.0	0.0	0.0
		60								N/A		20.9	0.0	0.0	0.0	0.0
Final DGM Volume:										Gas Analysis Averages:		20.9	0.0	0.0	0.0	0.0

Rev. 6/92

90-1101o

6700 | 35[illegible] 100.5% | 360.70 100.3% | 371.43 99.7% | 383.91 99.6% | 395.85 99.7% | 407.87 99.2%

CHROMIUM EMISSION TEST DATA SHEET

SITE INFORMATION	STACK GAS ESTIMATES	TEST SITE	ORY GAS METER	SAMPLING PROBE	NOZZLE	MISCELLANEOUS
Location: NADALAMOA	Temperature, F:	Schematic of Stack Cross-Section & Traverse Points	DGM Box #:	Probe # (Pitot #):	Nozzle #:	Barometer P, in Hg:
Building: 32	Static Pressure, in H2O:		Gamma:	Pitot Coefficient:	Nozzle Dia, in:	Ambient T, F:
Operator:	Velocity Head, in H20: (Delta-P)		Delta-H@:	Probe Length, in.:	Ideal Nozzle Dia, in:	Impinger Box #:
Date: 6/8/92	Moisture Content, %:		DGM Inlet Temp, F: (Avg. Est.)	Probe Liner Material: GLASS	LEAK CHECK: INITIAL or FINAL	
Test #: L-MID-1	Wet MW, lb-lbmole: (Default 28.8)	Area, in2: / Dia or L x W, in:		Probe Heater Setting, F: N/A	+ PITOT STEADY @ 6.6 in. H2O - PITOT STEADY @ 8.6 in. H2O SYSTEM 0.008 cfm @ 27 in. Hg	

Start or Stop Time	Traverse Point #	Sampling Time min	Dry Gas Meter Reading cf	Orifice Delta-H in. H2O	Delta-P in. H2O STO A	Stack Temp F (TC1) STO B	Temp. F @ DGM Inlet (TC6) STO C	Temp. F @ DGM Outlet (TC7)	Impinger Temp. F (TC4)	Filter Box Temp. F (TC3)	Sample Vacuum in. Hg	Stack Gas Analysis O2 %	CO2 %	CO ppm	NOx ppm	SO2 ppm
	13	60.		3.43	0.61	67	74	71	56	N/A	6.0	20.9	0.0	0.0	0.0	0.0
	14	65		3.25	0.57	61	76	71	52	N/A	5.8	20.9	0.0	0.0	0.0	0.0
	15	70		3.50	0.61	60	77	71	53	N/A	6.0	20.9	0.0	0.0	0.0	0.0
	16	75		3.56	0.62	60	78	71	52	N/A	6.0	20.9	0.0	0.0	0.0	0.0
	17	80		3.67	0.64	60	77	71	52	N/A	6.4	20.9	0.0	0.0	0.0	0.0
	18	85		4.47	0.78	60	77	70	52	N/A	7.8	20.9	0.0	0.0	0.0	0.0
	19	90		4.76	0.83	60	77	70	53	N/A	8.2	20.9	0.0	0.0	0.0	0.0
	20	95		4.63	0.81	60	76	70	52	N/A	8.0	20.9	0.0	0.0	0.0	0.0
	21	100		4.52	0.79	60	76	70	52	N/A	8.0	20.9	0.0	0.0	0.0	0.0
	22	105		4.63	0.81	59	75	69	51	N/A	8.0	20.9	0.0	0.0	0.0	0.0
	23	110		4.81	0.84	59	75	69	51	N/A	8.4	20.9	0.0	0.0	0.0	0.0
	24	115		4.63	0.81	60	75	69	51	N/A	8.1	20.9	0.0	0.0	0.0	0.0
		120	411.603							N/A		20.9	0.0	0.0	0.0	0.0
Final DGM Volume:											Gas Analysis Averages:	20.9	0.0	0.0	0.0	0.0

Rev. 5/92

FINAL ISOKIN - 99.97%
w/ 0.233" ID NOZZLE
NOT 0.273" ID

```
TEST=?
        L MID.
RUN=?
            1.
FILTER=?
            0.
GAMMA=?
        1.010
DEL-H-AT=?
        1.739
CSVBP=?
        0.840
T-METER=?
       66.000

STACK DATA
AREA, IN2=?
     1,395.400
PSTAT, IN H2O=?
       -4.600
PBAR, IN HG=?
       30.000
% H2O=?
        2.000
WET MOL WT
MS, LB/LBMOL=?
       28.000
AVG DELTA-P,
IN H2O=?
        0.650
T-STACK, F=?
       65.000
STACK VEL,
FT/S = 45.337

FOR 0.75 CFM
IDEAL NOZ
DIA, IN. = 0.229

ACTUAL NOZ
DIA, IN=?
        0.233
RUN

SAMPLE CFM = 0.779

INSTRUCTIONS

STO
 A = DELTA-P
 B = T-STACK
 C = T-METER
R/S

TO FIX ERROR
STO -A -B -C
R/S

TO CHECK ISO:
500, R/S

TO END RUN:
0, R/S

INIT MTR
VOL, FT3=?
       278.000
RUN
**************
POINT NO. 1.
RUN
          0.58 STO 01
         65.00 STO 02
         66.00 STO 03
RUN
DELTA-H= 1.71
**************
RUN POINT NO. 2.
          0.54 STO 01
RUN      61.00 STO 02
         66.00 STO 03
RUN
DELTA-H= 1.61
RUN **************
POINT NO. 3.
RUN       0.56 STO 01
         60.00 STO 02
RUN      66.00 STO 03
RUN
RUN DELTA-H= 1.67
**************
POINT NO. 4.
RUN       0.60 STO 01
         61.00 STO 02
         70.00 STO 03
RUN
DELTA-H= 1.80
RUN **************
POINT NO. 5.
          0.66 STO 01
         60.00 STO 02
         73.00 STO 03
RUN
DELTA-H= 1.99
**************
POINT NO. 6.
          0.70 STO 01
RUN      60.00 STO 02
         74.00 STO 03
RUN
DELTA-H= 2.36
**************
POINT NO. 7.
          0.86 STO 01
         60.00 STO 02
         76.00 STO 03
RUN
DELTA-H= 2.61
**************
POINT NO. 8.
          0.77 STO 01
         61.00 STO 02
         77.00 STO 03
RUN
DELTA-H= 2.34
**************
POINT NO. 9
          0.71 STO 01
         60.00 STO 02
         77.00 STO 03
RUN
DELTA-H= 2.16
**************
POINT NO. 10.
          0.69 STO 01
         59.00 STO 02
         78.00 STO 03
RUN
DELTA-H= 2.11
**************
POINT NO. 11.
          0.69 STO 01
         60.00 STO 02
         78.00 STO 03
RUN
DELTA-H= 2.10
**************
POINT NO. 12.
          0.67 STO 01
         61.00 STO 02
         78.00 STO 03
RUN
DELTA-H= 2.04
**************
POINT NO. 13.
          0.61 STO 01
         67.00 STO 02
         74.00 STO 03
RUN
DELTA-H= 1.92
**************
POINT NO. 14.
          0.57 STO 01
         61.00 STO 02
         76.00 STO 03
RUN
DELTA-H= 1.73
**************
POINT NO. 15.
          0.61 STO 01
         60.00 STO 02
         77.00 STO 03
RUN
DELTA-H= 1.86
**************
POINT NO. 16.
          0.62 STO 01
         60.00 STO 02
         78.00 STO 03
RUN
DELTA-H= 1.89
**************
POINT NO. 17.
          0.64 STO 01
         60.00 STO 02
         77.00 STO 03
RUN
DELTA-H= 1.95
**************
POINT NO. 18.
          0.78 STO 01
         60.00 STO 02
         77.00 STO 03
RUN
DELTA-H= 2.37
**************
POINT NO. 19.
          0.83 STO 01
         60.00 STO 02
         77.00 STO 03
RUN
DELTA-H= 2.52
**************
POINT NO. 20.
          0.81 STO 01
         60.00 STO 02
         76.00 STO 03
RUN
DELTA-H= 2.46
**************
POINT NO. 21.
          0.79 STO 01
         60.00 STO 02
         76.00 STO 03
RUN
DELTA-H= 2.40
**************
POINT NO. 22.
          0.81 STO 01
         59.00 STO 02
         75.00 STO 03
RUN
DELTA-H= 2.46
**************
POINT NO. 23.
          0.84 STO 01
         59.00 STO 02
         75.00 STO 03
RUN
DELTA-H= 2.55
**************
POINT NO. 24.
          0.81 STO 01
         60.00 STO 02
         75.00 STO 03
RUN
DELTA-H= 2.45
**************
POINT NO. 25.
          0.00    RUN
END RUN=?
1=YES 0=NO
          1.00    RUN
**AVERAGES**
KV=19.057
TMETER F=74.667
TSTACK F=60.583
PSTACK, IN HG=29.662
DELTA-H=2.122
DELTA-P=0.698

FINAL METER
VOL, FT3=?
       411.603    RUN
INITIAL=278.000
TIME, MIN=?
       120.000    RUN
SOURCE?
0=OTHER
1=BOILER
          0.000   RUN
% O2=?
       20.900    RUN
% CO2=?
          0.000   RUN
H2O WT KNOWN?
1=YES 0=NO
          1.000   RUN
WEIGH IMPS
THEN R/S
                  RUN
GRAMS H2O=?
       53.900    RUN

MTR VOL, DSCF=
      134.300
1-BWS =
        0.931
% MCO =
          1.9
STACK GAS WET
MOL. WT, MS,
LB/LB MOL=
       28.633
AVG STACK
VEL, FT/S =
       46.929
STACK FLOW
ACFM =
     27,186.836
QS, DSCFM =
     26,748.469

ISOKIN % = 136.0
**END**
```

CHROMIUM EMISSION TEST

IMPINGER BOX SET UP & NOZZLE CALIBRATION SHEET

DATE: 6/ /92

AP CONTROLS: Wet Scrubber Ceco Filter

BASE: NAD Alameda

TEST SITE: ~~INLET OUTLET~~ MID N/A

BUILDING NO: 32

TEST RUN NO: 1-Mid-2

SOURCE ID: 1-Hard chrome

IMPINGER BOX: 4 PREP BY: BH

[✓] 1. Initially wash all glassware as follows; detergent wash, deionized water rinse, 1:1 HNO3 solution soak, deionized water rinse, and 0.1N NaOH solution rinse. Sample recovery preps glassware for next use.

[✓] 2. Add 100ml 0.1N NaOH solution to the first two impingers (standard, modified impingers, respectively). Record initial weights.

[✓] 3. Leave the third impinger (modified) empty. Record initial weight.

[✓] 4. Fill the fourth impinger (modified) with indicating type silica gel. Record initial weight. If sampling time is > 6 hours, add a fifth silica gel impinger.

[✓] 5. Place Pallflex T60A20 teflon coated filter or equivalent into filter holder and install between the third and fourth impingers. Do not weigh or number the filter.

[✓] 6. Assemble impinger bottles and glass elbows (180s) so that air flows from a smaller to larger holes (if applicable). Do not grease balljoint fittings.

[✓] 7. Calibrate nozzle by measuring four IDs with a micrometer.

	Impinger No.	Contents	Tare	Initial	Final	Change
1	4-1	100 ml 0.1 N NaOH	496.3	593.6	609.8	16.2
2	4-2	100 ml 0.1 N NaOH	509.9	604.4	609.9	5.5
3	4-3	Empty	500.5	500.5	502.2	1.7
4	4-4	Silica Gel	566.7	889.0	907.2	18.2
5	~~[illegible]~~	Silica Gel				
					Net Weight Gain	41.6

Note: Record weights as grams.

Silica Gel Condition Before Test: NEW After Test: 20% SPENT

Nozzle No: Q#11 ? Calibrated by: _____

	0°	90°	45°	135°	Average
ID Before Test:	.233	.234	.233	.233	.233
ID After Test:	.233	.233	.233	.233	.233

TOTAL LIQ = 610.7 − 287.7 = 323 grams

C-10

21.5 | 420.87 99.9% | 430.93 98.9% | 440.21 98.1% | 454.04 99.1%

CHROMIUM EMISSION TEST DATA SHEET

SITE INFORMATION	STACK GAS ESTIMATES	TEST SITE	DRY GAS METER	SAMPLING PROBE	NOZZLE	MISCELLANEOUS
Location: NAD ALAMEDA	Temperature, F: 63	Schematic of Stack Cross-Section & Traverse Points	DGM Box #: 16	Probe # (Pitot #): 5-20	Nozzle #: Q#11	Barometer P, in Hg: 30.00
Building: 32	Static Pressure, in H2O: -4.60		Gamma: 1.010	Pitot Coefficient: 0.84	Nozzle Dia, in: 0.233	Ambient T, F: 66
Operator: RWS	Velocity Head, in H2O: (Delta-P) 0.65		Delta-H@: 1.739	Probe Length, in.: 60	Ideal Nozzle Dia, in: 0.226	Impinger Box #: N#434
Date: 8 JUNE 92	Moisture Content, %: ~2		DGM Inlet Temp, F: (Avg. Est.) 75	Probe Liner Material: GLASS	LEAK CHECK: INITIAL or FINAL	
Test #: L-MID-2 1/RUN2	Wet MW, lb-lbmole: (Default 28.8) 28.8	Area, in2: 1385.4	Dia or L x W, in: 42	Probe Heater Setting, F: N/A	+ PITOT steady @ 8.1 in. H2O - PITOT steady @ 7.3 in. H2O SYSTEM 0.011 cfm @ 15 in. Hg	

Start or Stop Time	Traverse Point #	Sampling Time min	Dry Gas Meter Reading cf	Orifice Delta-H in. H2O	Delta-P in. H2O (STG A)	Stack Temp F (TC1) (STG B)	Temp. F @ DGM Inlet (TC6) (STG C)	Temp. F @ DGM Outlet (TC7)	Impinger Temp. F (TC4)	Filter Box Temp. F (TC3)	Sample Vacuum in. Hg	Stack Gas Analysis O2 %	CO2 %	CO ppm	NOx ppm	SO2 ppm
1537	1	0	416.200	1.87	0.63	63	68	65	57	N/A	2.4	20.9	0.0	0.0	0.0	0.0
	2	5		1.70	0.57	61	67	65	51	N/A	2.1	20.9	0.0	0.0	0.0	0.0
	3	10		1.73	0.58	61	69	66	49	N/A	2.1	20.9	0.0	0.0	0.0	0.0
	4	15		1.83	0.61	62	72	67	50	N/A	2.2	20.9	0.0	0.0	0.0	0.0
	5	20		2.08	0.69	62	74	67	52	N/A	2.5	20.9	0.0	0.0	0.0	0.0
	6	25		2.39	0.79	61	75	68	53	N/A	2.8	20.9	0.0	0.0	0.0	0.0
	7	30		2.61	0.86	61	77	69	53	N/A	2.7	20.9	0.0	0.0	0.0	0.0
	8	35		2.39	0.79	61	76	69	50	N/A	2.8	20.9	0.0	0.0	0.0	0.0
	9	40		2.27	0.75	61	75	69	49	N/A	2.8	20.9	0.0	0.0	0.0	0.0
	10	45		2.27	0.75	60	74	69	49	N/A	2.8	20.9	0.0	0.0	0.0	0.0
	11	50		2.27	0.75	60	74	68	49	N/A	2.8	20.9	0.0	0.0	0.0	0.0
	12	55		2.24	0.74	60	74	68	49	N/A	2.7	20.9	0.0	0.0	0.0	0.0
		60								N/A		20.9	0.0	0.0	0.0	0.0
Final DGM Volume:										Gas Analysis Averages:		20.9	0.0	0.0	0.0	0.0

Rev. 6/92

92	94	96	98.0	99.5	100.2
473.59	481.28	489.94	498.69	507.88	612.87
100.0%	99.8%	99.5%	99.7%	99.9%	100.2%

CHROMIUM EMISSION TEST DATA SHEET

SITE INFORMATION	STACK GAS ESTIMATES	TEST SITE	DRY GAS METER	SAMPLING PROBE	NOZZLE	MISCELLANEOUS
Location: NAD ALAMEDA	Temperature, F:	Schematic of Stack Cross-Section & Traverse Points	DGM Box #:	Probe # (Pitot #):	Nozzle #:	Barometer P, in Hg:
Building: 32	Static Pressure, in H2O:		Gamma:	Pitot Coefficient:	Nozzle Dia, in:	Ambient T, F:
Operator: RWS	Velocity Head, in H2O: (Delta-P)		Delta-H@:	Probe Length, in.:	Ideal Nozzle Dia, in:	Impinger Box #:
Date: 8 JUNE 92	Moisture Content, %:		DGM Inlet Temp, F: (Avg. Est.)	Probe Liner Material: GLASS	LEAK CHECK: INITIAL or FINAL	
Test #: L-MID-2 1 RUN 2	Wet MW, lb-lbmole: (Default 28.8)	Area, in2: / Dia or L x W, in:		Probe Heater Setting, F: N/A	+ PITOT STEADY @ 7.0 in. H2O - PITOT STEADY @ 7.0 in. H2O SYSTEM 0.009 cfm @ 10 in. Hg	

Start or Stop Time	Traverse Point #	Sampling Time min	Dry Gas Meter Reading cf	Orifice Delta-H in. H2O	Delta-P in. H2O (STD A)	Stack Temp F (TC1) (STD B)	Temp. F @ DGM Inlet (TC6) (STD C)	Temp. F @ DGM Outlet (TC7)	Impinger Temp. F (TC4)	Filter Box Temp. F (TC3)	Sample Vacuum in. Hg	Stack Gas Analysis O2 %	CO2 %	CO ppm	NOx ppm	SO2 ppm
s 1043	13	60	465.112 (100.9%)	1.58	0.53	61	69	66	51	N/A	2.1	20.9	0.0	0.0	0.0	0.0
	14	~~70~~ 65		1.56	0.52	60	68	66	45	N/A	2.0	20.9	0.0	0.0	0.0	0.0
	15	70		1.80	0.60	60	70	66	44	N/A	2.2	20.9	0.0	0.0	0.0	0.0
	16	~~80~~ 75		1.86	0.62	61	71	67	45	N/A	2.2	20.9	0.0	0.0	0.0	0.0
	17	80		2.08	0.69	60	73	67	47	N/A	2.5	20.9	0.0	0.0	0.0	0.0
	18	~~90~~ 85		2.45	0.81	61	75	68	48	N/A	2.9	20.9	0.0	0.0	0.0	0.0
	19	90		2.64	0.87	61	76	69	48	N/A	3.0	20.9	0.0	0.0	0.0	0.0
	20	~~100~~ 95		2.64	0.87	61	77	69	50	N/A	3.0	20.9	0.0	0.0	0.0	0.0
	21	100		2.52	0.83	61	77	70	50	N/A	3.0	20.9	0.0	0.0	0.0	0.0
	22	105		2.58	0.85	61	77	70	51	N/A	3.0	20.9	0.0	0.0	0.0	0.0
	23	110		2.62	0.86	61	78	70	51	N/A	3.0	20.9	0.0	0.0	0.0	0.0
	24	~~120~~ 115		2.40	0.79	61	78	70	50	N/A	3.0	20.9	0.0	0.0	0.0	0.0
1143		120	515.484 (100.3%)							N/A		20.9	0.0	0.0	0.0	0.0
Final DGM Volume:											Gas Analysis Averages:	20.9	0.0	0.0	0.0	0.0

Rev. 5/92

```
TEST=?
L NID                RUN
RUN=?
            2.       RUN
FILTER=?
            0.       RUN
GAMMA=?
        1.010        RUN
DEL-H-AT=?
        1.739        RUN
CSUBP=?
         .840        RUN
T-METER=?
       75.000        RUN

STACK DATA
AREA, IN2=?
    1,385.400        RUN
PSTAT, IN H2O=?
       -4.600        RUN
PBAR, IN HG=?
       30.000        RUN
% H2O=?
        2.000        RUN
WET MOL WT
MS, LB/LBMOL=?
       28.800        RUN
AVG DELTA-P,
IN H2O=?
         .650        RUN
T-STACK, F=?
       75.000        RUN
STACK VEL,
FT/S = 45.018

FOR 0.75 CFM
IDEAL NOZ
DIA, IN. = 0.228

ACTUAL NOZ
DIA, IN=?
         .233        RUN

SAMPLE CFM = 0.785

INSTRUCTIONS

STO
A = DELTA-P
B = T-STACK
C = T-METER
R/S

TO FIX ERROR
STO -A -B -C
R/S

TO CHECK ISO:
500, R/S

TO END RUN:
0, R/S
```

```
INIT MTR
VOL, FT3=?
        416.200      RUN
**************
POINT NO. 1.
                .63 STO 01
              63.00 STO 02
              68.00 STO 03
                        RUN
DELTA-H= 1.07
**************
POINT NO. 2.
                .57 STO 01
              61.00 STO 02
              67.00 STO 03
                        RUN
DELTA-H= 1.70
**************
POINT NO. 3.
                .58 STO 01
              61.00 STO 02
              69.00 STO 03
                        RUN
DELTA-H= 1.73
**************
POINT NO. 4.
                .61 STO 01
              62.00 STO 02
              72.00 STO 03
                        RUN
DELTA-H= 1.83
**************
POINT NO. 5.
                .69 STO 01
              62.00 STO 02
              74.00 STO 03
                        RUN
DELTA-H= 2.00
**************
POINT NO. 6.
                .79 STO 01
              61.00 STO 02
              75.00 STO 03
                        RUN
DELTA-H= 2.39
**************
POINT NO. 7.
                .86 STO 01
              61.00 STO 02
              77.00 STO 03
                        RUN
DELTA-H= 2.61
**************
POINT NO. 8.
                .79 STO 01
              61.00 STO 02
              76.00 STO 03
                        RUN
DELTA-H= 2.39
**************
POINT NO. 9.
```

```
                .75 STO 01
              61.00 STO 02
              75.00 STO 03
                        RUN
DELTA-H= 2.27
**************
POINT NO. 10.
                .75 STO 01
              60.00 STO 02
              74.00 STO 03
                        RUN
DELTA-H= 2.27
**************
POINT NO. 11.
                        RUN
DELTA-H= 2.27
**************
POINT NO. 12.
                .74 STO 01
                        RUN
DELTA-H= 2.24
**************
POINT NO. 13.
                .53 STO 01
              61.00 STO 02
              69.00 STO 03
                        RUN
DELTA-H= 1.58
**************
POINT NO. 14.
                .52 STO 01
              60.00 STO 02
              68.00 STO 03
                        RUN
DELTA-H= 1.55
**************
POINT NO. 15.
                .60 STO 01
              70.00 STO 03
                        RUN
DELTA-H= 1.88
**************
POINT NO. 16.
                .62 STO 01
              61.00 STO 02
              71.00 STO 03
                        RUN
DELTA-H= 1.86
**************
POINT NO. 17.
                .69 STO 01
              60.00 STO 02
              73.00 STO 03
                        RUN
DELTA-H= 2.08
**************
POINT NO. 18.
                .81 STO 01
              61.00 STO 02
              75.00 STO 03
                        RUN
DELTA-H= 2.45
```

```
**************
POINT NO. 19.
                .87 STO 01
              61.00 STO 02
              76.00 STO 03
                        RUN
DELTA-H= 2.64
**************
POINT NO. 20.
                .88 STO 01
              77.00 STO 03
                        RUN
DELTA-H= 2.64
**************
POINT NO. 21.
                .83 STO 01
                        RUN
DELTA-H= 2.52
**************
POINT NO. 22.
                .85 STO 01
                        RUN
DELTA-H= 2.58
**************
POINT NO. 23.
                .86 STO 01
              70.00 STO 03
                        RUN
DELTA-H= 2.62
**************
POINT NO. 24.
                .79 STO 01
                        RUN
DELTA-H= 2.40
**************
POINT NO. 25.
                0.00     RUN
END RUN=?
1=YES 0=NO
                1.00     RUN
**AVERAGES**
KV=19.345
TMETER F=73.500
TSTACK F=68.917
PSTACK, IN HG=29.662
DELTA-H=2.182
DELTA-P=0.718

FINAL METER
VOL, FT3=?
        515.489      RUN
INITIAL=416.200
TIME, MIN=?
        120.000      RUN
SOURCE?
0=OTHER
1=BOILER
                0.000    RUN
% O2=?
         20.900      RUN
% CO2=?
                0.000    RUN
H2O WT KNOWN?
```

```
1=YES 0=NO
                1.000    RUN
WEIGH IMPS
THEN R/S
                         RUN
GRAMS H2O=?
               41.600    RUN
MTR VOL, DSCF=
            100.040
1-BWS =
                0.981
% H2O =
                    1.9
STACK GAS WET
MOL. WT, MS,
LB/LB MOL=
               28.628
AVG STACK
VEL, FT/S =
               47.672
STACK FLOW
ACFM =
          27,518.595
QS, DSCFM =
          27,119.238

ISOKIN % = 99.9
**END**
```

TANK LOAD DATA SHEET

DATE: 9 June 92

TEST RUN NO: _____

TEST RUN NO: _____

TEST RUN NO: _____

TEST RUN NO: _____

TEST RUN NO: _____

TEST RUN NO: _____

PROCESS DESCRIPTION

Tank Number	M-2	M-3	M-4		
Process	Cr plate	—	—		
Temperature	140	140	135		
Agitation	Air	Air	Air		
Fume Suppressant	No	—	—		
Ventilation System Performance					
Load Surface Area	900 ~~1500~~ sq. ~~1000~~ in ~	1000	1000		
Comments	7-4 — 812.5 grams 75% spent 2-4 — 847.3 grams 60% spent.				

9 big electrodes 12 big electrodes 13 big electrodes

2 Sm "

TANK LOAD DATA SHEET (CONTINUED)

TANK NUMBER	M-2	M-3	M-4		
TIME (INIT)	AMPERES AND ~~OR~~ AMPERE-HOURS (BOTH)				
0835	1010 / 472200	1520 / 654200	1520 / 60620		
0900	1020 / 475870	1520 / 659950	1520 / 66220		
0930	1010 / 480300	1530 / 667450	1520 / 73850		
1000	1010 / 484850	1530 / 674950	1520 / 81200		
1030	1000 / 489400	1520 / 682400	1520 / 88690		
1100	1010 / 494000	1520 / 690000	1520 / 96280		
1130	1010 / 498500	1530 / 697400	1520 / 103600		
1200	1010 / 503240	1530 / 705240	1520 / 111420		
1300	1010 / 512200	1520 / 720000	1520 / 126000		
1330	1010 / 516700	1520 / 727340	1520 / 133350		
1400	1010 / 521300	1530 / 735000	1520 / 140900		
1430	1000 / 525900	1530 / 742580	1520 / 148400		
1500	1010 / 530300	1530 / 750,000	1520 / 155700		
1530	1010 / 534800	1520 / 757350	1520 / 163000		
1600	1010 / 539600	1530 / 765200	1510 / 170700		
1700	1010 / 548400	1520 / 780000	1520 / 185350		
1730	1010 / 553160	1520 / 787900	1520 / 193200		
			~~[illegible]~~		

PRELIMINARY VELOCITY TRAVERSE DATA SHEET

DATE: 6/6/92 READ BY: BH	A	DISTURB	DISTANCE A: .67 ft/dia
BASE: NAD Alameda		TEST SITE	DISTANCE B: 3 ft/dia
BUILDING NO: 32			TRAVERSE PTS REQ'D: 24
SOURCE ID: M - Hard chrome	B		TRAVERSE PTS USED, n: 24
AP CONTROLS: Wet scrubber Ceco Filter			CIRCULAR DIAMETER: 36 in
TEST SITE: INLET (OUTLET) N/A		DISTURB	RECTANGULAR L x W: in

	STACK PRESSURES (inches H_2O) ΔP_{vel}	P_{stat}	$\sqrt{\Delta P}$	CYCLONIC FLOW $\lvert\alpha\rvert°$
1	.27	-.10	.520	6
2	.36	-.13	.600	1
3	.42	-.13	.648	3
4	.46	-.18	.678	4
5	.56	-.22	.748	3
6	.71	-.27	.843	6
7	.76	-.27	.872	3
8	.67	-.27	.819	6
9	.60	-.23	.775	4
10	.54	-.24	.735	4
11	.50	-.22	.707	6
12	.50	-.22	.707	4

	STACK PRESSURES (inches H_2O) ΔP_{vel}	P_{stat}	$\sqrt{\Delta P}$	CYCLONIC FLOW $\lvert\alpha\rvert°$
13	.52	-.23	.721	
14	.55	-.20	.742	
15	.57	-.24	.755	
16	.61	-.27	.781	
17	.68	-.28	.825	
18	.77	-.28	.877	
19	.76	-.30	.872	
20	.61	-.27	.781	
21	.54	-.23	.735	
22	.48	-.18	.693	
23	.41	-.14	.640	
24	.33	-.09	.574	

AVERAGE VELOCITY HEAD $\Delta P = [(\Sigma\sqrt{\Delta P})/n]^2 =$ .541

AVERAGE STATIC PRESSURE $= (\Sigma P_{stat})/n =$ -.216

AVERAGE CYCLONIC FLOW ANGLE $= (\Sigma\alpha)/n =$ 4.2

CHROMIUM EMISSION TEST

IMPINGER BOX SET UP & NOZZLE CALIBRATION SHEET

DATE: 6/9/92

AP CONTROLS: WET SCRUB FIBER BED FILTER

BASE: NAD ALAMEDA

TEST SITE: INLET (OUTLET) N/A

BUILDING NO: 32

TEST RUN NO: M-OUT-1

SOURCE ID: LINE M HARD CHROME

IMPINGER BOX: 2 PREP BY: CKY

[✓] 1. Initially wash all glassware as follows; detergent wash, deionized water rinse, 1:1 HNO3 solution soak, deionized water rinse, and 0.1N NaOH solution rinse. Sample recovery preps glassware for next use.

[✓] 2. Add 100ml 0.1N NaOH solution to the first two impingers (standard, modified impingers, respectively). Record initial weights.

[✓] 3. Leave the third impinger (modified) empty. Record initial weight.

[✓] 4. Fill the fourth impinger (modified) with indicating type silica gel. Record initial weight. If sampling time is > 6 hours, add a fifth silica gel impinger.

[✓] 5. Place Pallflex T60A20 teflon coated filter or equivalent into filter holder and install between the third and fourth impingers. Do not weigh or number the filter.

[✓] 6. Assemble impinger bottles and glass elbows (180s) so that air flows from a smaller to larger holes (if applicable). Do not grease balljoint fittings.

[ ] 7. Calibrate nozzle by measuring four IDs with a micrometer.

PROBE SN-

	Impinger No.	Contents	Initial	Final	Change
1	2-1	100 ml 0.1 N NaOH ~~446.2~~ 456.04	~~536.0~~ 557.4	557.7	.3
2	2-2	100 ml 0.1 N NaOH B 446.2	536.0	561.4	25.4
3	2-3	Empty	500.5	566.5	66.0
4	2-4	Silica Gel	811.5	847.3	35.8
5	2-5	Silica Gel	778.5	816.7	38.2
				Net Weight Gain	165.7

Note: Record weights as grams.

Silica Gel Condition Before Test: NEW After Test: _____

Nozzle No: P265 Calibrated by: DM

	0°	90°	45°	135°	Average
ID Before Test:	0.265	0.265	0.264	0.264	0.2645
ID After Test:	0.264	0.265	0.264	0.264	0.264

TOTAL LIQ = 696.5 − 287.3 = 409.2 grams

CHROMIUM EMISSION TEST DATA SHEET

SITE INFORMATION	STACK GAS ESTIMATES	TEST SITE	DRY GAS METER	SAMPLING PROBE	NOZZLE	MISCELLANEOUS
Location: NAD ALAMEDA	Temperature, F: 70	Schematic of Stack Cross-Section & Traverse Points	DGM Box #: 17	Probe # (Pitot #): SN-2	Nozzle #: P265	Barometer P, in Hg: 29.92
Building: 32	Static Pressure, in H2O: -0.22	BUS 11 29 13 12	Gamma: 1.001	Pitot Coefficient: 0.84	Nozzle Dia, in: 0.2645	Ambient T, F: 65
Operator: [illegible]	Velocity Head, in H2O: (Delta-P) 0.541		Delta-H@: 1.773	Probe Length, in.: 60	Ideal Nozzle Dia, in: 0.236	Impinger Box #: 2
Date: 6/9/92	Moisture Content, %: 2		DGM Inlet Temp, F: (Avg. Est.) 80	Probe Liner Material: GLASS	LEAK CHECKS INITIAL or FINAL	
Test #: M-OUT-1	Wet MW, lb-lbmole: (Default 28.8) 28.8	Area, in2: 1018	Dia or L x W, in: 36	Probe Heater Setting, F: N/A	+ PITOT STEADY @ 6.4 in. H2O	
					- PITOT STEADY @ 9.5 in. H2O	
					SYSTEM 0.008 cfm @ 20 in. Hg	

Start or Stop Time	Traverse Point #	Sampling Time min	Dry Gas Meter Reading cf	Orifice Delta-H in. H2O	Delta-P in. H2O STO A	Stack Temp F (TC1) STO B	Temp. F @ DGM Inlet (TC2) STO C	Temp. F @ DGM Outlet (TC7)	Impinger Temp. F (TC4)	Filter Box Temp. F (TC3)	Sample Vacuum in. Hg	Stack Gas Analysis O2 %	CO2 %	CO ppm	NOx ppm	SO2 ppm
START 841	R1	0	300.817	2.33	0.48	66	57	57	46	N/A	4.5	20.9	0.0	0.0	0.0	0.0
	11	18	316.35	2.41	0.48	66	64	59	46	N/A	5.0	20.9	0.0	0.0	0.0	0.0
	10.3	36	332.3	2.55	0.50	66	73	64	46	N/A	5.0	20.9	0.0	0.0	0.0	0.0
	9.4	54	348.7	2.72	.53	68	77	69	45	N/A	5.2	20.9	0.0	0.0	0.0	0.0
	8.5	72	365.6	3.09	.60	67	79	72	46	N/A	5.9	20.9	0.0	0.0	0.0	0.0
	7.6	90	383.3	3.63	.70	67	82	75	48	N/A	7.0	20.9	0.0	0.0	0.0	0.0
	6.7	108	402.7	3.65	.70	68	86	78	48	N/A	7.0	20.9	0.0	0.0	0.0	0.0
	5.8	126	422.2	2.87	.55	69	88	81	49	N/A	5.0	20.9	0.0	0.0	0.0	0.0
	4.9	144	439.9	2.29	0.44	69	87	81	48	N/A	5.0	20.9	0.0	0.0	0.0	0.0
	3.10	162	455.9	2.13	0.41	70	86	81	49	N/A	4.0	20.9	0.0	0.0	0.0	0.0
	2.11	180	471.45	1.74	0.335	70	87	82	48	N/A	4.0	20.9	0.0	0.0	0.0	0.0
	1.12	198	485.55	1.40	0.27	70	87	82	48	N/A	3.0	20.9	0.0	0.0	0.0	0.0
STOP 217		216	498.167							N/A		20.9	0.0	0.0	0.0	0.0
Final DGM Volume:										Gas Analysis Averages:		20.9	0.0	0.0	0.0	0.0

Rev. 5/92

MTR AFTER 498.452
LEAK VS 167
LEAK VOL 0.285

CHANGE SILICA IMPINGER
BEFORE CHANGE LEAK CHECKS 0.003 CFM @ 11 IN Hg
AFTER CHANGE 0.004 CFM @ 11 IN Hg

-9.8 passed
+7.3 passed

CHROMIUM EMISSION TEST DATA SHEET

SITE INFORMATION	STACK GAS ESTIMATES	TEST SITE	DRY GAS METER	SAMPLING PROBE	NOZZLE	MISCELLANEOUS
Location: NAD ALAMEDA	Temperature, F:	Schematic of Stack Cross-Section & Traverse Points	DGM Box #:	Probe # (Pitot #):	Nozzle #:	Barometer P, in Hg:
Building: 32	Static Pressure, in H2O:		Gamma:	Pitot Coefficient:	Nozzle Dia, in:	Ambient T, F:
Operator: JM	Velocity Head, in H2O: (Delta-P)		Delta-H@:	Probe Length, in.:	Ideal Nozzle Dia, in:	Impinger Box #:
Date: 6/9/92	Moisture Content, %:		DGM Inlet Temp, F: (Avg. Est.)	Probe Liner Material: GLASS	LEAK CHECK: INITIAL or FINAL	
Test #: CM-OUT-1	Wet MW, lb-lbmole: (Default 28.8)	Area, in2: / Dia or L x W, in:		Probe Heater Setting, F: N/A	+ PITOT passed @ 7.3 in. H2O - PITOT passed @ 9.8 in. H2O SYSTEM .01 cfm @ 8.5 in. Hg	

Start or Stop Time	Traverse Point #	Sampling Time min	Dry Gas Meter Reading cf *	Orifice Delta-H in. H2O	Delta-P in. H2O STO A	Stack Temp F (TC1) STO B	Temp. F @ DGM Inlet (TC6) STO C	Temp. F @ DGM Outlet (TC7)	Impinger Temp. F (TC4)	Filter Box Temp. F (TC3)	Sample Vacuum in. Hg	Stack Gas Analysis O2 %	CO2 %	CO ppm	NOx ppm	SO2 ppm
START 1ST POINT 1257	B3	216	498.452	2.31	0.45	70	79	79	48	N/A	5.0	20.9	0.0	0.0	0.0	0.0
2	B4	234	514.45	2.42	0.47	71	82	78	47	N/A	5.0	20.9	0.0	0.0	0.0	0.0
2	B5	252	530.9	2.56	0.495	70	84	79	49	N/A	5.5	20.9	0.0	0.0	0.0	0.0
2	B6	270	547.7	2.63	0.51	71	84	79	50	N/A	5.0	20.9	0.0	0.0	0.0	0.0
2	B7	288	564.3	3.26	0.63	70	84	79	50	N/A	6.5	20.9	0.0	0.0	0.0	0.0
1	B8	306	583.1	3.72	0.72	70	84	79	51	N/A	7.5	20.9	0.0	0.0	0.0	0.0
1	B9	324	603.32	3.58	0.69	70	85	79	51	N/A	7.5	20.9	0.0	0.0	0.0	0.0
1	B10	342	623.2	2.90	0.56	70	85	78	53	N/A	6.5	20.9	0.0	0.0	0.0	0.0
1	B11	360	641.6	2.27	.44	72	85	79	52	N/A	6.5	20.9	0.0	0.0	0.0	0.0
1	B12	378	660.0	2.22	.43	72	85	79	52	N/A	4.5	20.9	0.0	0.0	0.0	0.0
1	B13	396	675.3	1.75	.34	72	83	78	52	N/A	3.7	20.9	0.0	0.0	0.0	0.0
1	B14	414	688.9	1.49	.29	72	82	78	51	N/A	3.0	20.9	0.0	0.0	0.0	0.0
		432	701.191							N/A		20.9	0.0	0.0	0.0	0.0
Final DGM Volume:										Gas Analysis Averages:		20.9	0.0	0.0	0.0	0.0

Rev. 5/92

ALREADY CORRECTED FOR -0.1285

701.191

* ACTUAL MTR VOL IS 0.1285 LESS

650.80
650.58

P.01 @ 8.5"
vac

```
TEST=?
N OUT
RUN=?
          1.
FILTER=?
          0.
GAMMA=?
       1.001
DEL-H-AT=?
       1.773
CSUBP=?
        .840
T-METER=?
      80.000

STACK DATA
AREA, IN2=?
    1,010.000
PSTAT, IN H2O=?
        -.220
PBAR, IN HG=?
      29.920
% H2O=?
       2.000
WET MOL WT
MS, LB/LBMOL=?
      28.000
AVG DELTA-P,
IN H2O=?
        .541
T-STACK, F=?
      78.000
STACK VEL,
FT/S = 41.435

FOR 0.75 CFM
IDEAL NOZ
DIA, IN. = 0.236

ACTUAL NOZ
DIA, IN=?
      .2645

SAMPLE CFM = 0.943

INSTRUCTIONS

STO
 A = DELTA-P
 B = T-STACK
 C = T-METER
R/S

TO FIX ERROR
STO -A -B -C
R/S

TO CHECK ISO:
500. R/S

TO END RUN:
0. R/S
```

```
   INIT MTR
RUN VOL, FT3=?
          300.817    RUN
RUN ***********
   POINT NO. 1.
RUN          65.00 STO 02
             57.00 STO 03
RUN            .47 STO 01
                       RUN
RUN DELTA-H= 2.33
   ***********
RUN POINT NO. 2.
             66.00 STO 02
RUN          64.00 STO 03
               .48 STO 01
                       RUN
   DELTA-H= 2.41
RUN ***********
   POINT NO. 3.
RUN            .58 STO 01
             73.00 STO 03
RUN                    RUN
   DELTA-H= 2.55
RUN ***********
   POINT NO. 4.
             77.00 STO 03
RUN          68.00 STO 02
               .53 STO 01
                       RUN
RUN DELTA-H= 2.72
   ***********
RUN POINT NO. 5.
             79.00 STO 03
             67.00 STO 02
               .60 STO 01
                       RUN
   DELTA-H= 3.09
   ***********
   POINT NO. 6.
             82.00 STO 03
               .70 STO 01
RUN                    RUN
   DELTA-H= 3.63
   ***********
   POINT NO. 7.
                9.00    CLX
             86.00 STO 03
             68.00 STO 02
                       RUN
   DELTA-H= 3.65
   ***********
   POINT NO. 8.
             88.00 STO 03
             69.00 STO 02
               .55 STO 01
                       RUN
   DELTA-H= 2.87
   ***********
   POINT NO. 9.
             87.00 STO 03
               .44 STO 01
                       RUN
```

```
DELTA-H= 2.29
***********
POINT NO. 10.
             86.00 STO 03
             78.00 STO 02
               .41 STO 01
                       RUN
DELTA-H= 2.13
***********
POINT NO. 11.
             87.00 STO 03
              .335 STO 01
                       RUN
DELTA-H= 1.74
***********
POINT NO. 12.
               .27 STO 01
                       RUN
DELTA-H= 1.40
***********
POINT NO. 13.
             79.00 STO 03
             70.00 STO 02
               .45 STO 01
                       RUN
DELTA-H= 2.31
***********
POINT NO. 14.
             82.00 STO 03
             71.00 STO 02
               .47 STO 01
                       RUN
DELTA-H= 2.42
***********
POINT NO. 15.
             78.00 STO 02
             84.00 STO 03
              .495 STO 01
                       RUN
DELTA-H= 2.56
***********
POINT NO. 16.
               .51 STO 01
             78.00 STO 02
             84.00 STO 03
                       RUN
DELTA-H= 2.64
***********
POINT NO. 17.
               .63 STO 01
                       RUN
DELTA-H= 3.26
***********
POINT NO. 18.
               .72 STO 01
                       RUN
DELTA-H= 3.72
***********
POINT NO. 19.
             85.00 STO 03
               .69 STO 01
                       RUN
DELTA-H= 3.58
```

```
***********
POINT NO. 20.
               .56 STO 01
                       RUN
DELTA-H= 2.90
***********
POINT NO. 21.
             85.00 STO 03
             72.00 STO 02
               .44 STO 01
                       RUN
DELTA-H= 2.27
***********
POINT NO. 22.
               .43 STO 01
                       RUN
DELTA-H= 2.22
***********
POINT NO. 23.
             83.00 STO 03
               .34 STO 01
                       RUN
DELTA-H= 1.75
***********
POINT NO. 24.
               .29 STO 01
             82.00 STO 03
                       RUN
DELTA-H= 1.49
***********
POINT NO. 25.
                0.00    RUN
END RUN=?
1=YES 0=NO
                1.00    RUN
**AVERAGES**
KV=16.143
TMETER F=81.458
TSTACK F=69.333
PSTACK, IN HG=29.984
DELTA-H=2.581
DELTA-P=0.492

FINAL METER
VOL, FT3=?
          700.906    RUN
INITIAL=300.817
TIME, MIN=?
          432.000    RUN
SOURCE?
0=OTHER
1=BOILER
                0.000    RUN
% O2=?
               20.900    RUN
% CO2=?
                0.000    RUN
H2O WT KNOWN?
1=YES 0=NO
                1.000    RUN
WEIGH IMPS
THEN R/S
```

```
                       RUN
GRAMS H2O=?
          165.700    RUN

MTR VOL, DSCF=
          392.988
1-BWS =
            0.981
% H2O =
              1.9
STACK GAS WET
MOL. WT, MS,
LB/LB MOL=
           28.625
AVG STACK
VEL, FT/S =
           39.626
STACK FLOW
ACFM =
       16,888.114
QS, DSCFM =
       16,429.429

ISOKIN % = 102.6
**END**
```

CHROMIUM EMISSION TEST

IMPINGER BOX SET UP & NOZZLE CALIBRATION SHEET

DATE: 6/9/92 AP CONTROLS: WET SCRUBBER FIBER BED FILTER

BASE: NAD ALAMEDA TEST SITE: INLET (OUTLET) N/A

BUILDING NO: 32 TEST RUN NO: M-OUT-2

SOURCE ID: LINEM HARD IMPINGER BOX: 1 PREP BY: CKY

[✓] 1. Initially wash all glassware as follows; detergent wash, deionized water rinse, 1:1 HNO3 solution soak, deionized water rinse, and 0.1N NaOH solution rinse. Sample recovery preps glassware for next use.

[✓] 2. Add 100ml 0.1N NaOH solution to the first two impingers (standard, modified impingers, respectively). Record initial weights.

[✓] 3. Leave the third impinger (modified) empty. Record initial weight.

[✓] 4. Fill the fourth impinger (modified) with indicating type silica gel. Record initial weight. If sampling time is > 6 hours, add a fifth silica gel impinger.

[✓] 5. Place Pallflex T60A20 teflon coated filter or equivalent into filter holder and install between the third and fourth impingers. Do not weigh or number the filter.

[✓] 6. Assemble impinger bottles and glass elbows (180s) so that air flows from a smaller to larger holes (if applicable). Do not grease balljoint fittings.

[✓] 7. Calibrate nozzle by measuring four IDs with a micrometer.

	Impinger No.	Contents	Initial	Final	Change
1	1-1	100 ml 0.1 N NaOH 451.4	534.6	610.6	76
2	1-2	100 ml 0.1 N NaOH 454.5	535.0	547.4	12.4
3	1-3	Empty	453.7	457.7	4
4	1-4	Silica Gel 759 grams	775.7	812.5	36.8
5	1-5	Silica Gel 700 grams	870.0	907.1	37.1
		Net Weight Gain			166.3

Note: Record weights as grams.

Silica Gel Condition Before Test: NEW After Test: _____

Nozzle No: P964 Calibrated by: DSN

	0°	90°	45°	135°	Average
ID Before Test:	0.264	0.264	0.265	0.264	0.264
ID After Test:	0.264	0.264	0.264	0.264	0.264

TOTAL LIQ = 644.1 − 289.7 = 354.4 grams

CHROMIUM EMISSION TEST DATA SHEET

SITE INFORMATION	STACK GAS ESTIMATES	TEST SITE	DRY GAS METER	SAMPLING PROBE	NOZZLE	MISCELLANEOUS
Location: NAD ALAmedA	Temperature, F: 70	Schematic of Stack Cross-Section & Traverse Points: Bus	DGM Box #: 18	Probe # (Pitot #): 5N-13	Nozzle #: P264	Barometer P, in Hg: 29.92
Building: 32	Static Pressure, in H2O: -0.22		Gamma: .994	Pitot Coefficient: 0.84	Nozzle Dia, in: 0.264	Ambient T, F: 65
Operator: J.C, B.#	Velocity Head, in H2O: (Delta-P) 0.541		Delta-H@: 1.786	Probe Length, in.: 60	Ideal Nozzle Dia, in: .236	Impinger Box #: 1
Date: 6/9/92	Moisture Content, %: 2%		DGM Inlet Temp, F: (Avg. Est.) 80	Probe Liner Material: GLASS	LEAK CHECK: INITIAL or FINAL	
Test #: M-OUT-2	Wet MW, lb-lbmole: (Default 28.8) 28.8	Area, in2: 1018 / Dia or L x W, in: 36	1018 in²	Probe Heater Setting, F: N/A	+ PITOT STEADY @ 6.9 in. H2O; - PITOT STEADY @ 9.3 in. H2O; SYSTEM 0.005 cfm @ 21 in. Hg	

Start or Stop Time	Traverse Point #	Sampling Time min	Dry Gas Meter Reading cf	Orifice Delta-H in. H2O	Delta-P in. H2O STO A	Stack Temp F (TC1) STO B(1)	Temp. F @ DGM Inlet (TC6) STO C	Temp. F @ DGM Outlet (TC7)	Impinger Temp. F (TC4)	Filter Box Temp. F (TC3)	Sample Vacuum in. Hg	Stack Gas Analysis O2 %	CO2 %	CO ppm	NOx ppm	SO2 ppm
8:36	13	0	224.150	1.79	.36	64	56	58	43	N/A	4.2	20.9	0.0	0.0	0.0	0.0
	14	18	237.600	1.71	.34	65	63	60	46	N/A	4.2	20.9	0.0	0.0	0.0	0.0
	15	36	251.00	1.98	.39	65	70	63	45	N/A	5.0	20.9	0.0	0.0	0.0	0.0
	16	54	265.30	2.10	.41	66	74	66	46	N/A	5.00	20.9	0.0	0.0	0.0	0.0
	17	72	280.28	3.03	.59	66	77	69	46	N/A	6.9	20.9	0.0	0.0	0.0	0.0
	18	90	297.90	3.98	.77	66	80	72	48	N/A	9.0	20.9	0.0	0.0	0.0	0.0
	19	108		3.92	.75	68	85	77	49	N/A	9.0	20.9	0.0	0.0	0.0	0.0
	20	126	338.62	3.45	.66	68	87	78	50	N/A	8.0	20.9	0.0	0.0	0.0	0.0
	21	144	357.78	2.87	.55	69	88	80	49	N/A	6.8	20.9	0.0	0.0	0.0	0.0
	22	162	375.6	2.76	.53	69	87	80	48	N/A	6.4	20.9	0.0	0.0	0.0	0.0
	23	180	393.0	2.50	.48	70	87	80	49	N/A	6.0	20.9	0.0	0.0	0.0	0.0
	24	198	409.4	2.34	.45	70	87	81	49	N/A	5.9	20.9	0.0	0.0	0.0	0.0
COP 12:12		216	425.368							N/A		20.9	0.0	0.0	0.0	0.0
Final DGM Volume:										Gas Analysis Averages:		20.9	0.0	0.0	0.0	0.0

Rev. 5/92

VOL AFTER LEAKCHECKS 425.368
BEFORE 425.368
A 0
21.5
.19

CHANGE 4th IMPINGER

BEFORE CHANGE .01
AFTER 0.014

LEAK CHECKS CFM @ 10 IN Hg / 10

12:12 11:72 3:36

CHROMIUM EMISSION TEST DATA SHEET

SITE INFORMATION	STACK GAS ESTIMATES	TEST SITE	DRY GAS METER	SAMPLING PROBE	NOZZLE	MISCELLANEOUS
Location: NAD Alameda	Temperature, F:	Schematic of Stack Cross-Section & Traverse Points	DGM Box #:	Probe # (Pitot #):	Nozzle #:	Barometer P, in Hg:
Building: 32	Static Pressure, in H2O:		Gamma:	Pitot Coefficient:	Nozzle Dia, in:	Ambient T, F:
Operator:	Velocity Head, in H2O: (Delta-P)		Delta-H@:	Probe Length, in.:	Ideal Nozzle Dia, in:	Impinger Box #:
Date: 6/2/92	Moisture Content, %:		DGM Inlet Temp, F: (Avg. Est.)	Probe Liner Material: GLASS	LEAK CHECK: INITIAL or FINAL	
Test #: Circuit-2	Wet MW, lb/lbmole: (Default 28.8)	Area, in2: / Dia or L x W, in:		Probe Heater Setting, F: N/A	+ PITOT pass steady @ 5.6 in. H2O - PITOT pass steady @ 6.4 in. H2O SYSTEM .014 cfm @ 11.5 in. Hg	

Start or Stop Time	Traverse Point #	Sampling Time min	Dry Gas Meter Reading cf	Orifice Delta-H in. H2O	Delta-P in. H2O STO A	Stack Temp F (TC1) STO B	Temp. F @ DGM Inlet (TC6) STO C	Temp. F @ DGM Outlet (TC7)	Impinger Temp. F (TC4)	Filter Box Temp. F (TC3)	Sample Vacuum in. Hg	Stack Gas Analysis O2 %	CO2 %	CO ppm	NOx ppm	SO2 ppm
1:02	1	216	425.888	1.39	.27	68	78	76	49	N/A	4.0	20.9	0.0	0.0	0.0	0.0
	2	234	438.1	1.80	[illegible]	69	79	77	47	N/A	5.0	20.9	0.0	0.0	0.0	0.0
	3	252	451.9	2.18	.42	68	83	78	48	N/A	5.5	20.9	0.0	0.0	0.0	0.0
	4	270	467.2	2.33	.45	70	84	78	48	N/A	5.9	20.9	0.0	0.0	0.0	0.0
	5	288	482.9	2.84	.55	70	83	79	49	N/A	7.0	20.9	0.0	0.0	0.0	0.0
	6	306	500.25	3.63	.70	68	84	78	49	N/A	8.8	20.9	0.0	0.0	0.0	0.0
	7	324	520.03	3.79	.73	69	85	78	50	N/A	9.3	20.9	0.0	0.0	0.0	0.0
	8	342	540.37	3.36	.65	71	85	78	51	N/A	8.3	20.9	0.0	0.0	0.0	0.0
	9	360	559.51	3.00	.58	71	86	79	51	N/A	7.5	20.9	0.0	0.0	0.0	0.0
	10	378	577.79	2.79	.54	71	85	79	51	N/A	7.2	20.9	0.0	0.0	0.0	0.0
	11	396	595.49	2.48	.48	71	85	79	52	N/A	6.6	20.9	0.0	0.0	0.0	0.0
		414	612.25	2.43	.47	72	85	78	52	N/A	6.5	20.9	0.0	0.0	0.0	0.0
		432	629.026							N/A		20.9	0.0	0.0	0.0	0.0
Final DGM Volume:										Gas Analysis Averages:		20.9	0.0	0.0	0.0	0.0

Rev. 5/92

* ACTUAL MTR VOL IS 0.38 LESS 0.019

445. 432.00
444.48 421.48
475.10
1.79
1104.45

```
TEST=?
M OUT
RUN=?
          2.   RUN
FILTER=?
          0.   RUN
GAMMA=?
       .994    RUN
DEL-H-AT=?
      1.786    RUN
CSUBP=?
       .840    RUN
T-METER=?
     80.000    RUN

STACK DATA
AREA, IN2=?
   1,018.000   RUN
PSTAT, IN H2O=?
      -.220    RUN
PBAR, IN HG=?
     29.920    RUN
% H2O=?
      2.000    RUN
WET MOL WT
MS, LB/LBMOL=?
     28.000    RUN
AVG DELTA-P,
IN H2O=?
       .541    RUN
T-STACK, F=?
     70.000    RUN
STACK VEL,
FT/S = 41.435

FOR 0.75 CFM
IDEAL NOZ
DIA, IN. = 0.236

ACTUAL NOZ
DIA, IN=?
       .264    RUN

SAMPLE CFM = 0.939

INSTRUCTIONS

STO
 A = DELTA-P
 B = T-STACK
 C = T-METER
R/S

TO FIX ERROR
STO -A -B -C
R/S

TO CHECK ISO:
500. R/S

TO END RUN:
0. R/S

INIT MTR
VOL, FT3=?
     224.150    RUN
**************
POINT NO. 1.
          56.00 STO 02
          64.00 STO 02
            .36 STO 01
                    RUN
DELTA-H= 1.79
**************
POINT NO. 2.
            .34 STO 01
          65.00 STO 02
          63.00 STO 03
                    RUN
DELTA-H= 1.71
**************
POINT NO. 3.
          70.00 STO 03
            .39 STO 01
                    RUN
DELTA-H= 1.98
**************
POINT NO. 4.
            .41 STO 01
          66.00 STO 02
          75.00 STO 03
                    RUN
DELTA-H= 2.10
**************
POINT NO. 5.
            .59 STO 01
          77.00 STO 03
                    RUN
DELTA-H= 3.03
**************
POINT NO. 6.
            .77 STO 01
          80.00 STO 03
                    RUN
DELTA-H= 3.98
**************
POINT NO. 7.
          85.00 STO 03
            .75 STO 01
                    RUN
DELTA-H= 3.92
**************
POINT NO. 8.
          68.00 STO 02
          87.00 STO 03
            .66 STO 01
                    RUN
DELTA-H= 3.45
**************
POINT NO. 9.
          80.00 STO 03
          69.00 STO 02
            .55 STO 01
                    RUN
DELTA-H= 2.87
**************
POINT NO. 10.
          87.00 STO 03
          69.00 STO 02
            .53 STO 01
                    RUN
DELTA-H= 2.76
**************
POINT NO. 11.
          70.00 STO 02
          87.00 STO 03
            .48 STO 01
                    RUN
DELTA-H= 2.50
**************
POINT NO. 12.
            .45 STO 01
                    RUN
DELTA-H= 2.34
**************
POINT NO. 13.
          70.00 STO 03
          68.00 STO 02
            .27 STO 01
                    RUN
DELTA-H= 1.39
**************
POINT NO. 14.
          79.00 STO 03
          69.00 STO 02
            .35 STO 01
                    RUN
DELTA-H= 1.80
**************
POINT NO. 15.
          83.00 STO 03
          68.00 STO 02
            .42 STO 01
                    RUN
DELTA-H= 2.10
**************
POINT NO. 16.
          84.00 STO 03
          70.00 STO 02
            .45 STO 01
                    RUN
DELTA-H= 2.33
**************
POINT NO. 17.
          83.00 STO 03
            .55 STO 01
                    RUN
DELTA-H= 2.84
**************
POINT NO. 18.
          84.00 STO 03
          68.00 STO 02
            .70 STO 01
                    RUN
DELTA-H= 3.63
**************
POINT NO. 19.
          69.00 STO 02
          85.00 STO 03
            .73 STO 01
                    RUN
DELTA-H= 3.79
**************
POINT NO. 20.
          71.00 STO 02
            .65 STO 01
                    RUN
DELTA-H= 3.36
**************
POINT NO. 21.
          86.00 STO 03
            .50 STO 01
                    RUN
DELTA-H= 3.00
**************
POINT NO. 22.
            .54 STO 01
          85.00 STO 03
                    RUN
DELTA-H= 2.79
**************
POINT NO. 23.
          71.00 STO 02
            .40 STO 01
                    RUN
DELTA-H= 2.48
**************
POINT NO. 24.
          72.00 STO 01
            .47 STO 01
                    RUN
DELTA-H= 2.43
**************
POINT NO. 25.
            0.00    RUN
END RUN=?
1=YES 0=NO
            1.00    RUN
**AVERAGES**
KV=16.425
TMETER F=81.000
TSTACK F=68.375
PSTACK, IN HG=29.904
DELTA-H=2.685
DELTA-P=0.511

FINAL METER
VOL, FT3=?
     620.507    RUN
INITIAL=224.150
TIME, MIN=?
     432.000    RUN
SOURCE?
0=OTHER
1=BOILER
            0.000   RUN
% O2=?
      20.900    RUN
% CO2=?
       0.000    RUN
H2O WT KNOWN?
1=YES 0=NO
       1.000    RUN
WEIGH IMPS
THEN R/S
                RUN
GRAMS H2O=?
     166.300    RUN

MTR VOL, DSCF=
     394.838
1-BWS =
       0.981
% H2O =
       1.9
STACK GAS WET
MOL. WT. MS,
LB/LB MOL=
      28.625
AVG STACK
VEL, FT/S =
      40.314
STACK FLOW
ACFM =
   17,099.093
QS, DSCFM =
   16,745.303

ISOKIN % = 101.6
**END**
```

PRELIMINARY VELOCITY TRAVERSE DATA SHEET

DATE: 6/ /92 READ BY:	DISTURB	DISTANCE A: 0.5 ft/dia	
BASE: NAD ALAMEDA	A	DISTANCE B: 3 ft/dia	
BUILDING NO: 32	TEST SITE	TRAVERSE PTS REQ'D: 24	
SOURCE ID: LINE M HARD CHROME	B	TRAVERSE PTS USED, n: 24	
AP CONTROLS: WET SCRUBBER		CIRCULAR DIAMETER: 34 in	
TEST SITE: ~~INLET OUTLET~~ N/A	DISTURB	RECTANGULAR L x W: ___ in	

MID

	STACK PRESSURES (inches H_2O) ΔP_{vel}	P_{stat}	$\sqrt{\Delta P}$	CYCLONIC FLOW $\lvert\alpha\rvert°$
1	.67	4.25	.82	
2	.67	4.37	.82	
3	.63	4.15	.79	
4	.67	4.25	.82	
5	.76	4.35	.87	
6	.81	4.35	.9	
7	.84	4.40	.92	
8	.79	4.37	.89	
9	.78	4.35	.88	
10	.76	4.35	.87	
11	.71	4.35	.84	
12	.69	4.30	.83	

	STACK PRESSURES (inches H_2O) ΔP_{vel}	P_{stat}	$\sqrt{\Delta P}$	CYCLONIC FLOW $\lvert\alpha\rvert°$
13	1.10	4.7	1.04	
14	1.25	5.0	1.12	
15	.44	4.15	.66	
16	.52	4.05	.72	
17	.73	4.10	.85	
18	.82	4.35	.91	
19	.85	4.38	.92	
20	.82	4.35	.91	
21	.75	4.32	.87	
22	.66	4.32	.81	
23	.60	4.30	.77	
24	.60	4.25	.77	

AVERAGE VELOCITY HEAD $\Delta P = [(\Sigma\sqrt{\Delta P})/n]^2 =$ .74

AVERAGE STATIC PRESSURE $= (\Sigma P_{stat})/n =$ -4.34

AVERAGE CYCLONIC FLOW ANGLE $= (\Sigma\alpha)/n =$ ____

CHROMIUM EMISSION TEST

IMPINGER BOX SET UP & NOZZLE CALIBRATION SHEET

DATE: 9 JUNE 92

BASE: NAD ALAMEDA

BUILDING NO: 32

SOURCE ID: M-MID-1

AP CONTROLS: _____

TEST SITE: INLET MID OUTLET N/A

TEST RUN NO: M-Mid-1

IMPINGER BOX: 3 PREP BY: Chg

[ ] 1. Initially wash all glassware as follows; detergent wash, deionized water rinse, 1:1 HNO3 solution soak, deionized water rinse, and 0.1N NaOH solution rinse. Sample recovery preps glassware for next use.

[ ] 2. Add 100ml 0.1N NaOH solution to the first two impingers (standard, modified impingers, respectively). Record initial weights.

[ ] 3. Leave the third impinger (modified) empty. Record initial weight.

[ ] 4. Fill the fourth impinger (modified) with indicating type silica gel. Record initial weight. If sampling time is > 6 hours, add a fifth silica gel impinger.

[ ] 5. Place Pallflex T60A20 teflon coated filter or equivalent into filter holder and install between the third and fourth impingers. Do not weigh or number the filter.

[ ] 6. Assemble impinger bottles and glass elbows (180s) so that air flows from a smaller to larger holes (if applicable). Do not grease balljoint fittings.

[ ] 7. Calibrate nozzle by measuring four IDs with a micrometer.

	Impinger No.	Contents	Initial	Final	Change
1	3-1	100 ml 0.1 N NaOH 484.0	583.3	599.0	15.7
2	3-2	100 ml 0.1 N NaOH 520.8	619.8	621.4	
3	3-3	Empty 471.4	471.4	471.9	
4	3-4	Silica Gel	700.5	716.5	
5		Silica Gel			
				Net Weight Gain	33.8

Note: Record weights as grams.

Silica Gel Condition Before Test: Blue After Test: 30% Spent

Nozzle No: Q# 11 Calibrated by: _____

	0°	90°	45°	135°	Average
ID Before Test:	0.233	0.234	0.233	0.233	0.233
ID After Test:	0.233	0.233	0.233	0.233	0.233

TOTAL LIQ = 638.8 − 289.7 = 349.1 grams

522.7 102% | 527.7 96.5% | 541.6 98.3% | 549.92 99.9% | 558.5 100.4%

CHROMIUM EMISSION TEST DATA SHEET

SITE INFORMATION	STACK GAS ESTIMATES	TEST SITE	DRY GAS METER	SAMPLING PROBE	NOZZLE	MISCELLANEOUS
Location: NAD Alameda	Temperature, F: 65 63	Schematic of Stack Cross-Section & Traverse Points	DGM Box #: 16 N0449	Probe # (Pitot #): 3N-200	Nozzle #: Q #11	Barometer P, in Hg: 29.92
Building: 32	Static Pressure, in H2O: -4.34		Gamma: 1.009	Pitot Coefficient: .84	Nozzle Dia, in: .233	Ambient T, F: 65
Operator: RWS	Velocity Head, in H2O: (Delta-P) .74		Delta-H@: 1.749	Probe Length, in.: 3ft	Ideal Nozzle Dia, in: .222	Impinger Box #: N0435
Date: 6/9/92	Moisture Content, %: 2		DGM Inlet Temp, F: (Avg. Est.) 63	Probe Liner Material: GLASS	LEAK CHECK: INITIAL or FINAL	
Test #: 2 M-MID #1	Wet MW, lb-lbmole: (Default 28.8)	Area, in2: 908 Dia or L x W, in: 34		Probe Heater Setting, F: N/A	+ PITOT Pass steady @ 7 in. H2O; - PITOT Pass steady @ 9 in. H2O; SYSTEM .013 cfm @ 15 in. Hg	

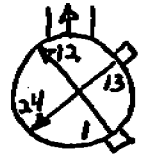

Start or Stop Time	Traverse Point #	Sampling Time min	Dry Gas Meter Reading cf	Orifice Delta-H in. H2O	Delta-P in. H2O STO A	Stack Temp F (TC1) STO B	Temp. F @ DGM Inlet (TC6) STO C	Temp. F @ DGM Outlet (TC7)	Impinger Temp. F (TC4)	Filter Box Temp. F (TC3)	Sample Vacuum in. Hg	Stack Gas Analysis O2 %	CO2 %	CO ppm	NOx ppm	SO2 ppm
812	1	0	518.200	1.40	0.47	62	63	62	51	N/A	3.0	20.9	0.0	0.0	0.0	0.0
	2	5		1.27	0.43	63	63	62	47	N/A	2.8	20.9	0.0	0.0	0.0	0.0
	3	10		1.55	0.52	62	65	63	48	N/A	3.0	20.9	0.0	0.0	0.0	0.0
	4	15		1.89	0.63	60	67	63	48	N/A	3.5	20.9	0.0	0.0	0.0	0.0
	5	20		1.96	0.65	59	67	64	49	N/A	3.7	20.9	0.0	0.0	0.0	0.0
	6	25		2.20	0.73	59	67	64	48	N/A	4.0	20.9	0.0	0.0	0.0	0.0
	7	30		2.49	0.83	59	66	64	48	N/A	4.5	20.9	0.0	0.0	0.0	0.0
	8	35		2.28	0.76	59	66	64	47	N/A	4.2	20.9	0.0	0.0	0.0	0.0
	9	40		2.20	0.73	59	67	64	47	N/A	4.0	20.9	0.0	0.0	0.0	0.0
	10	45		2.14	0.71	59	67	64	47	N/A	4.0	20.9	0.0	0.0	0.0	0.0
	11	50		2.05	0.68	59	68	64	48	N/A	3.8	20.9	0.0	0.0	0.0	0.0
	12	55		1.99	0.66	59	68	64	48	N/A	3.7	20.9	0.0	0.0	0.0	0.0
		60								N/A		20.9	0.0	0.0	0.0	0.0
Final DGM Volume:									Gas Analysis Averages:			20.9	0.0	0.0	0.0	0.0

Rev. 6/92

111.5	111.5	101	111.5	111.5
571.60	582.70	593.99	602.47	606.33
101.1%	98.1%	98.1%	98.9%	99.1%

CHROMIUM EMISSION TEST DATA SHEET

SITE INFORMATION	STACK GAS ESTIMATES	TEST SITE	DRY GAS METER	SAMPLING PROBE	NOZZLE	MISCELLANEOUS
Location: NAD ALAMEDA	Temperature, F:	Schematic of Stack: Cross-Section & Traverse Points	DGM Box #:	Probe # (Pitot #):	Nozzle #:	Barometer P, in Hg:
Building: 32	Static Pressure, in H2O:		Gamma:	Pitot Coefficient:	Nozzle Dia, in:	Ambient T, F:
Operator: RWS	Velocity Head, in H2O: (Delta-P)		Delta-H@:	Probe Length, in.:	Ideal Nozzle Dia, in:	Impinger Box #:
Date: 9 JUNE 92	Moisture Content, %:		DGM Inlet Temp, F: (Avg. Est.)	Probe Liner Material: GLASS		LEAK CHECK: INITIAL or FINAL
Test #: M-MID-1 2 / RUN 1	Wet MW, lb/lbmole: Default 28.8)	Area, in2: Dia or L x W, in:		Probe Heater Setting, F: N/A		+ PITOT STEADY @ 6.3 in. H2O - PITOT STEADY @ 7.9 in. H2O SYSTEM 0.012 cfm @ 10 in. Hg

Start or Stop Time	Traverse Point #	Sampling Time min	Dry Gas Meter Reading cf 102%	Orifice Delta-H in. H2O	Delta-P in. H2O (STO A)	Stack Temp F (TC1) (STO B)	Temp. F @ DGM Inlet (TC6) (STO C)	Temp. F @ DGM Outlet (TC7)	Impinger Temp. F (TC4)	Filter Box Temp. F (TC3)	Sample Vacuum in. Hg	Stack Gas Analysis O2 %	CO2 %	CO ppm	NOx ppm	SO2 ppm
	13	60	564.831	1.04	0.35	64	66	65	55	N/A	2.6	20.9	0.0	0.0	0.0	0.0
	14	65		1.25	0.43	64	68	66	51	N/A	2.7	20.9	0.0	0.0	0.0	0.0
	15	70		1.24	0.41	62	71	66	51	N/A	2.7	20.9	0.0	0.0	0.0	0.0
	16	75		1.66	0.55	61	72	67	52	N/A	3.0	20.9	0.0	0.0	0.0	0.0
	17	80		1.98	0.65	60	74	67	52	N/A	3.0	20.9	0.0	0.0	0.0	0.0
	18	85		2.38	0.78	60	75	69	53	N/A	3.3	20.9	0.0	0.0	0.0	0.0
	19	90		2.50	0.82	60	76	70	52	N/A	4.5	20.9	0.0	0.0	0.0	0.0
	20	95		2.39	0.78	60	77	70	52	N/A	4.4	20.9	0.0	0.0	0.0	0.0
	21	100		2.18	0.71	60	78	71	53	N/A	4.0	20.9	0.0	0.0	0.0	0.0
	22	105		1.87	0.61	60	78	71	53	N/A	3.8	20.9	0.0	0.0	0.0	0.0
	23	110		1.75	0.57	60	79	72	54	N/A	3.5	20.9	0.0	0.0	0.0	0.0
	24	115	99.3%	1.72	0.56	60	79	72	54	N/A	3.5	20.9	0.0	0.0	0.0	0.0
		120	609.091							N/A		20.9	0.0	0.0	0.0	0.0
Final DGM Volume:									Gas Analysis Averages:			20.9	0.0	0.0	0.0	0.0

Rev. 6/92

```
TEST=?
N MID
RUN=?
          1.
FILTER=?
          0.
GAMMA=?
      1.009
DEL-H-AT=?
      1.749
CSUBP=?
       .040
T-METER=?
     63.000

STACK DATA
AREA, IN2=?
    900.000
PSTAT, IN H2O=?
     -4.340
PBAR, IN HG=?
     29.920
% H2O=?
      2.000
WET MOL WT
MS, LB/LBMOL=?
     28.000
AVG DELTA-P,
IN H2O=?
       .740
T-STACK, F=?
     62.000
STACK VEL,
FT/S = 48.339

FOR 0.75 CFM
IDEAL NOZ
DIA, IN. = 0.221

ACTUAL NOZ
DIA, IN=?
       .233

SAMPLE CFM = 0.031

INSTRUCTIONS

STO
 A = DELTA-P
 B = T-STACK
 C = T-METER
R/S

TO FIX ERROR
STO -A -B -C
R/S

TO CHECK ISO:
500, R/S

TO END RUN:
0, R/S
```

```
RUN INIT MTR
    VOL, FT3=?
RUN          518.200   RUN
    ***********
RUN POINT NO. 1.
                .47 STO 01
RUN           62.00 STO 02
              63.00 STO 03
RUN                     RUN
    DELTA-H= 1.40
RUN ***********
    POINT NO. 2.
RUN             .43 STO 01
              63.00 STO 02
                        RUN
    DELTA-H= 1.27
RUN ***********
    POINT NO. 3.
RUN             .52 STO 01
              62.00 STO 02
RUN           65.00 STO 03
                        RUN
RUN DELTA-H= 1.55
    ***********
    POINT NO. 4.
RUN             .63 STO 01
              60.00 STO 02
              67.00 STO 03
RUN                     RUN
    DELTA-H= 1.89
RUN ***********
    POINT NO. 5.
                .65 STO 01
              59.00 STO 02
                        RUN
    DELTA-H= 1.96
    ***********
    POINT NO. 6.
                .73 STO 01
                        RUN
RUN DELTA-H= 2.20
    ***********
    POINT NO. 7.
                .83 STO 01
              66.00 STO 03
                        RUN
    DELTA-H= 2.49
    ***********
    POINT NO. 8.
                .76 STO 01
                        RUN
    DELTA-H= 2.28
    ***********
    POINT NO. 9.
                .73 STO 01
              67.00 STO 03
                        RUN
    DELTA-H= 2.20
    ***********
```

```
POINT NO. 10.
                .71 STO 01
                        RUN
DELTA-H= 2.14
***********
POINT NO. 11.
                .68 STO 01
              68.00 STO 03
                        RUN
DELTA-H= 2.05
***********
POINT NO. 12.
                .66 STO 01
                        RUN
DELTA-H= 1.99
***********
POINT NO. 13.
                .35 STO 01
              64.00 STO 02
              66.00 STO 03
                        RUN
DELTA-H= 1.04
***********
POINT NO. 14.
                .42 STO 01
              68.00 STO 03
                        RUN
DELTA-H= 1.25
***********
POINT NO. 15.
                .41 STO 01
              62.00 STO 02
              71.00 STO 03
                        RUN
DELTA-H= 1.24
***********
POINT NO. 16.
                .55 STO 01
              61.00 STO 02
              72.00 STO 03
                        RUN
DELTA-H= 1.66
***********
POINT NO. 17.
                .65 STO 01
              60.00 STO 02
              75.00 STO 03
              74.00 STO 03
                        RUN
DELTA-H= 1.90
***********
POINT NO. 18.
                .78 STO 01
              75.00 STO 03
                        RUN
DELTA-H= 2.30
***********
POINT NO. 19.
                .82 STO 01
              76.00 STO 03
                        RUN
DELTA-H= 2.50
```

```
***********
POINT NO. 20.
                .70 STO 01
              77.00 STO 03
                        RUN
DELTA-H= 2.39
***********
POINT NO. 21.
                .71 STO 01
              78.00 STO 03
                        RUN
DELTA-H= 2.18
***********
POINT NO. 22.
                .61 STO 01
                        RUN
DELTA-H= 1.87
***********
POINT NO. 23.
                .57 STO 01
              79.00 STO 03
                        RUN
DELTA-H= 1.75
***********
POINT NO. 24.
                .56 STO 01
                        RUN
DELTA-H= 1.72
***********
POINT NO. 25.
                 0.00   RUN
END RUN=?
1=YES 0=NO
                 1.00   RUN
**AVERAGES**
KV=17.925
TMETER F=70.292
TSTACK F=60.417
PSTACK, IN HG=29.601
DELTA-H=1.891
DELTA-P=0.610

FINAL METER
VOL, FT3=?
          609.091   RUN
INITIAL=518.200
TIME, MIN=?
          120.000   RUN
SOURCE?
0=OTHER
1=BOILER
            0.000   RUN
% O2=?
           20.900   RUN
% CO2=?
            0.000   RUN
H2O WT KNOWN?
1=YES 0=NO
            1.000   RUN
WEIGH IMPS
THEN R/S
```

```
                        RUN
GRAMS H2O=?
         33.000     RUN
MTR VOL, DSCF=
                  91.731
1-BWS =
                   0.903
% H2O =
                     1.7
STACK GAS WET
MOL. WT. MS.
LB/LB MOL=
                  28.651
AVG STACK
VEL, FT/S =
                  44.286
STACK FLOW
ACFM =
             16,724.736
DS. DSCFM =
             16,500.099

ISOKIN % = 98.7
**END**
```

CHROMIUM EMISSION TEST
IMPINGER BOX SET UP & NOZZLE CALIBRATION SHEET

DATE: 9 June 92

BASE: NAD ALAMEDA

BUILDING NO: 32

SOURCE ID: M Line

AP CONTROLS: _____

TEST SITE: (INLET) MID OUTLET N/A

TEST RUN NO: M-Mid-2

IMPINGER BOX: 4 PREP BY: Chy

[ ] 1. Initially wash all glassware as follows; detergent wash, deionized water rinse, 1:1 HNO3 solution soak, deionized water rinse, and 0.1N NaOH solution rinse. Sample recovery preps glassware for next use.

[ ] 2. Add 100ml 0.1N NaOH solution to the first two impingers (standard, modified impingers, respectively). Record initial weights.

[ ] 3. Leave the third impinger (modified) empty. Record initial weight.

[ ] 4. Fill the fourth impinger (modified) with indicating type silica gel. Record initial weight. If sampling time is > 6 hours, add a fifth silica gel impinger.

[ ] 5. Place Pallflex T60A20 teflon coated filter or equivalent into filter holder and install between the third and fourth impingers. Do not weigh or number the filter.

[ ] 6. Assemble impinger bottles and glass elbows (180s) so that air flows from a smaller to larger holes (if applicable). Do not grease balljoint fittings.

[ ] 7. Calibrate nozzle by measuring four IDs with a micrometer.

	Impinger No.	Contents	Initial	Final	Change
1	4-1	100 ml 0.1 N NaOH 497.3	593.3	612.4	19.1
2	4-2	100 ml 0.1 N NaOH 510.2	609.3	613.2	3.9
3	4-3	Empty 501.7	501.7	502.4	.7
4	4-4	Silica Gel	841.0	858.8	17.8
5		Silica Gel			
	Note: Record weights as grams.			Net Weight Gain	41.5

Silica Gel Condition Before Test: Blue After Test: _____

Nozzle No: ~~15~~ Q #11 Calibrated by: Chy

ID Before Test: 0.233 0.234 0.233 0.233 0.233

ID After Test: 0.233 (0°) 0.233 (90°) 0.233 (45°) 0.233 (135°) 0.233 Avg (Average)

TOTAL LQ = 666.8 − 289.4 = 377.4 grams

11.5			16
620.40	631.29	640.59	649.13
99.4%	97.6%	99.4%	100.0%

CHROMIUM EMISSION TEST DATA SHEET

SITE INFORMATION	STACK GAS ESTIMATES	TEST SITE	DRY GAS METER	SAMPLING PROBE	NOZZLE	MISCELLANEOUS
Location: NAD ALAMEDA	Temperature, F: 66	Schematic of Stack Cross-Section & Traverse Points	DGM Box #: 16	Probe # (Pitot #): 3N-200	Nozzle #: Q#11	Barometer P, in Hg: 29.92
Building: 32	Static Pressure, in H2O: -4.34		Gamma: 1.009	Pitot Coefficient: 0.84	Nozzle Dia, in: 0.233	Ambient T, F: 66
Operator: RWS	Velocity Head, in H2O: (Delta-P) 0.74		Delta-H@: 1.749	Probe Length, in.: 36	Ideal Nozzle Dia, in: 0.221	Impinger Box #: N/A 434
Date: 9 JUNE 92	Moisture Content, %: 2.0		DGM Inlet Temp, F: (Avg. Est.) 66	Probe Liner Material: GLASS	LEAK CHECK (INITIAL) or (FINAL)	
Test #: 2 /RUN 2 M-MID-2	Wet MW, lb-lbmole: (Default 28.8)	Area, in2: 908	Dia or L x W, in: 34	Probe Heater Setting, F: N/A	+ PITOT STEADY @ 6.7 in. H2O	
					- PITOT STEADY @ 7.0 in. H2O	
					SYSTEM .016 cfm @ 18 in. Hg	

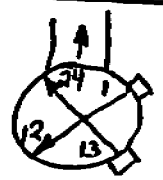

Start or Stop Time	Traverse Point #	Sampling Time min	Dry Gas Meter Reading cf	Orifice Delta-H in. H2O	Delta-P in. H2O (STO A)	Stack Temp F (TC1) (STO B)	Temp. F @ DGM Inlet (TC6) (STO C)	Temp. F @ DGM Outlet (TC7)	Impinger Temp. F (TC4)	Filter Box Temp. F (TC3)	Sample Vacuum in. Hg	Stack Gas Analysis O2 %	CO2 %	CO ppm	NOx ppm	SO2 ppm
1419	1	0	613.000	1.07	0.36	66	69	68	61	N/A	1.8	20.9	0.0	0.0	0.0	0.0
	2	5		1.43	0.48	66	70	68	55	N/A	2.0	20.9	0.0	0.0	0.0	0.0
	3	10		1.53	0.51	64	72	69	52	N/A	2.0	20.9	0.0	0.0	0.0	0.0
	4	15		1.60	0.53	64	75	69	52	N/A	2.1	20.9	0.0	0.0	0.0	0.0
	5	20		2.03	0.67	63	76	70	53	N/A	2.6	20.9	0.0	0.0	0.0	0.0
	6	25		2.41	0.79	62	78	71	53	N/A	2.9	20.9	0.0	0.0	0.0	0.0
	7	30		2.60	0.85	62	79	71	52	N/A	3.0	20.9	0.0	0.0	0.0	0.0
	8	35		2.54	0.83	63	80	72	52	N/A	3.0	20.9	0.0	0.0	0.0	0.0
	9	40		2.26	0.74	63	80	72	53	N/A	3.0	20.9	0.0	0.0	0.0	0.0
	10	45		2.05	0.67	63	80	73	51	N/A	2.7	20.9	0.0	0.0	0.0	0.0
	11	50		1.93	0.63	63	80	73	50	N/A	3.6	20.9	0.0	0.0	0.0	0.0
	12	55	1011.9	1.80	0.59	64	80	74	50	N/A	2.4	20.9	0.0	0.0	0.0	0.0
		60	660.099							N/A		20.9	0.0	0.0	0.0	0.0
Final DGM Volume:										Gas Analysis Averages:		20.9	0.0	0.0	0.0	0.0

Rev. 5/92

668.46 100.2%

680.32 99.7%

693.51 99.8%

701.63 100.2%

705.69 100.3

CHROMIUM EMISSION TEST DATA SHEET

SITE INFORMATION	STACK GAS ESTIMATES	TEST SITE	DRY GAS METER	SAMPLING PROBE	NOZZLE	MISCELLANEOUS
Location: NAD ALAMEDA, CA	Temperature, F:	Schematic of Stack	DGM Box #:	Probe # (Pitot #):	Nozzle #:	Barometer, in Hg:
Building: 32	Static Pressure, in H2O:	Cross-Section & Traverse Points	Gamma:	Pitot Coefficient:	Nozzle Dia, in:	Ambient T, F:
Operator: RWS	Velocity Head, in H2O: (Delta-P)		Delta-H@:	Probe Length, in.:	Ideal Nozzle Dia, in:	Impinger Box #:
Date: 9 JUNE 92	Moisture Content, %:		DGM Inlet Temp, F: (Avg. Est.)	Probe Liner Material: GLASS	LEAK CHECK: INITIAL or FINAL	
Test #: 2 / RUN 2 M-MID-2	Wet MW, lb-lbmole: (Default 28.8)	Area, in2: / Dia or L x W, in:		Probe Heater Setting, F: N/A	+ PITOT STEADY PASS @ 6.1 in. H2O	
					- PITOT STEADY @ 5.6 in. H2O	
					SYSTEM 0.018 cfm @ 10 in. Hg	

Start or Stop Time	Traverse Point #	Sampling Time min	Dry Gas Meter Reading cf	Orifice Delta-H in. H2O	Delta-P in. H2O (STD)	Stack Temp F (TC1) (STD)	Temp. F @ DGM Inlet (TC2) (STD-C)	Temp. F @ DGM Outlet (TC7)	Impinger Temp. F (TC4)	Filter Box Temp. F (TC3)	Sample Vacuum in. Hg	Stack Gas Analysis O2 %	CO2 %	CO ppm	NOx ppm	SO2 ppm
	13	60		1.21	0.40	65	74	73	54	N/A	2.0	20.9	0.0	0.0	0.0	0.0
	14	65		2.56	0.85	65	73	72	44	N/A	3.0	20.9	0.0	0.0	0.0	0.0
	15	70		1.72	0.57	65	74	72	44	N/A	2.2	20.9	0.0	0.0	0.0	0.0
	16	75		2.05	0.68	64	73	71	45	N/A	2.7	20.9	0.0	0.0	0.0	0.0
	17	80		2.15	0.71	63	74	71	46	N/A	2.8	20.9	0.0	0.0	0.0	0.0
	18	85		2.39	0.79	63	74	71	46	N/A	2.9	20.9	0.0	0.0	0.0	0.0
	19	90		2.55	0.84	63	75	71	46	N/A	3.0	20.9	0.0	0.0	0.0	0.0
	20	95		2.43	0.80	63	75	72	47	N/A	3.0	20.9	0.0	0.0	0.0	0.0
	21	100		2.30	0.76	64	76	72	47	N/A	3.0	20.9	0.0	0.0	0.0	0.0
	22	105		2.21	0.73	64	76	72	49	N/A	3.0	20.9	0.0	0.0	0.0	0.0
	23	110		2.09	0.69	64	76	72	49	N/A	2.8	20.9	0.0	0.0	0.0	0.0
	24	115	100.0%	2.00	0.66	64	76	72	49	N/A	2.7	20.9	0.0	0.0	0.0	0.0
		120	708.613							N/A		20.9	0.0	0.0	0.0	0.0
Final DGM Volume:											Gas Analysis Averages:	20.9	0.0	0.0	0.0	0.0

Rev. 5/92

```
TEST=?
M MID
RUN=?
          2.
FILTER=?
          0.
GAMMA=?
      1.009
DEL-H-AT=?
      1.749
CSUBP=?
       .840
T-METER=?
     66.000

STACK DATA
AREA, IN2=?
    900.000
PSTAT, IN H2O=?
     -4.340
PBAR, IN HG=?
     29.920
% H2O=?
      2.000
WET MOL WT
MS, LB/LBMOL=?
     28.000
AVG DELTA-P,
IN H2O=?
       .740
T-STACK, F=?
     66.000
STACK VEL,
FT/S = 48.524

FOR 0.75 CFM
IDEAL NOZ
DIA, IN. = 0.221

ACTUAL NOZ
DIA, IN=?
       .233
SAMPLE CFM = 0.832

INSTRUCTIONS

STO
A = DELTA-P
B = T-STACK
C = T-METER
R/S

TO FIX ERROR
STO -A -B -C
R/S

TO CHECK ISO:
500, R/S

TO END RUN:
0, R/S
```

```
RUN INIT MTR
    VOL, FT3=?
RUN          613.000    RUN
    ***************
RUN POINT NO. 1.
                   .36 STO 01
RUN             66.00 STO 02
                69.00 STO 03
RUN                        RUN
    DELTA-H= 1.07
RUN ***************
    POINT NO. 2.
RUN              .48 STO 01
                70.00 STO 03
                           RUN
    DELTA-H= 1.43
RUN ***************
    POINT NO. 3.
RUN              .51 STO 01
                64.00 STO 02
RUN             72.00 STO 03
                           RUN
RUN DELTA-H= 1.53
    ***************
    POINT NO. 4.
RUN              .53 STO 01
                75.00 STO 03
                           RUN
RUN DELTA-H= 1.60
    ***************
RUN POINT NO. 5.
                   .67 STO 01
                63.00 STO 02
                76.00 STO 03
                           RUN
    DELTA-H= 2.03
    ***************
    POINT NO. 6.
                   .79 STO 01
                62.00 STO 02
RUN             78.00 STO 03
                           RUN
    DELTA-H= 2.41
    ***************
    POINT NO. 7.
                   .85 STO 01
                79.00 STO 03
                           RUN
    DELTA-H= 2.60
    ***************
    POINT NO. 8.
                   .83 STO 01
                63.00 STO 02
                80.00 STO 03
                           RUN
    DELTA-H= 2.54
    ***************
    POINT NO. 9.
                   .74 STO 01
                           RUN
    DELTA-H= 2.26
```

```
***************
POINT NO. 10.
                   .67 STO 01
                           RUN
DELTA-H= 2.05
***************
POINT NO. 11.
                   .63 STO 01
                           RUN
DELTA-H= 1.93
***************
POINT NO. 12.
                   .59 STO 01
                64.00 STO 02
                           RUN
DELTA-H= 1.80
***************
POINT NO. 13.
                   .40 STO 01
                65.00 STO 02
                74.00 STO 03
                           RUN
DELTA-H= 1.21
***************
POINT NO. 14.
                   .85 STO 01
                73.00 STO 03
                           RUN
DELTA-H= 2.56
***************
POINT NO. 15.
                   .57 STO 01
                74.00 STO 03
                           RUN
DELTA-H= 1.72
***************
POINT NO. 16.
                   .60 STO 01
                64.00 STO 02
                73.00 STO 03
                           RUN
DELTA-H= 2.05
***************
POINT NO. 17.
                   .71 STO 01
                63.00 STO 02
                74.00 STO 03
                           RUN
DELTA-H= 2.15
***************
POINT NO. 18.
                   .79 STO 01
                   .79 STO 01
                           RUN
DELTA-H= 2.39
***************
POINT NO. 19.
                   .84 STO 01
                75.00 STO 03
                           RUN
DELTA-H= 2.55
```

```
***************
POINT NO. 20.
                   .88 STO 01
                           RUN
DELTA-H= 2.43
***************
POINT NO. 21.
                   .76 STO 01
                64.00 STO 02
                76.00 STO 03
                           RUN
DELTA-H= 2.30
***************
POINT NO. 22.
                   .73 STO 01
                           RUN
DELTA-H= 2.21
***************
POINT NO. 23.
                   .69 STO 01
                           RUN
DELTA-H= 2.09
***************
POINT NO. 24.
                   .66 STO 01
                           RUN
DELTA-H= 2.00
***************
POINT NO. 25.
                      0.00    RUN
END RUN=?
1=YES 0=NO
                      1.00    RUN
**AVERAGES**
KV=18.652
TMETER F=75.625
TSTACK F=63.750
PSTACK, IN HG=29.601
DELTA-H=2.039
DELTA-P=0.664

FINAL METER
VOL, FT3=?
            708.613    RUN
INITIAL=613.000
TIME, MIN=?
            120.000    RUN
SOURCE?
0=OTHER
1=BOILER
                0.000  RUN
% O2=?
               20.900  RUN
% CO2=?
                0.000  RUN
H2O WT KNOWN?
1=YES 0=NO
                1.000  RUN
MATCH INPS
THEN R/S
                       RUN
```

```
GRAMS H2O=?
          41.500    RUN
MTR VOL, DSCF=
                95.571
1-BWS =
                 0.900
% H2O =
                 2.0
STACK GAS WET
MOL. WT, MS,
LB/LB MOL=
                28.619
AVG STACK
VEL, FT/S =
                46.023
STACK FLOW
ACFM =
          17,411.875
QS, DSCFM =
          17,016.871

ISOKIN % = 99.7
**END**
```

~~TANK LOAD DATA SHEET (CONTINUED)~~

NO CAP

~~TANK NUMBER~~					
~~TIME (INIT)~~	TARE	FINAL	~~AMPERES AND/OR AMPERE-HOURS~~		
L-MID-1	287.1	656.5			
L-MID-2	287.7	610.7			
L-OUT-2	286.9	~~658.2~~	674.4		
L-OUT 1	286.5	625.5			
M-MID-1	289.7	638.8			
M-OUT-1	287.3	696.5			
M-OUT-2	289.7	644.1			
M-MID-2	289.4	666.8			
G-MID-1	289.2	~~649.8~~	661.8		
G-OUT-1	287.3	611.8			
G-OUT-2	290.9	664.9			
QA-1	290.2	536.4	—	8-15 PPB	
QA-2	287.5	505.2	—	15-26 PPB	
QA-3	287.4	508.0	—	50-65 PPB	

8 June 92

APPENDIX D

LABORATORY ANALYSIS AND SAMPLE CALCULATIONS

CHAIN OF CUSTODY RECORD

Form F-225, 10/90

[redacted]

COLLECTORS' AFFILIATION	Billed Client: Naval Energy + Environmental Support	SAMPLE TYPE (Use Code in Sample Type Col.)	
[X] Geochemical Testing Division	Address: 1001 LYONS ST Suite 1	GW GROUND WATER	SO SOIL
[ ] Earthtech Inc.	City: Port Hueneme State: CA Zip: 93043	SW SURFACE WATER	SL SLUDGE
[ ] Other _____	Contact: Bryan Harre	PW POTABLE WATER	HZ HAZARDOUS
	Phone: (805) 982-3542 Fax: 805-982-5388	WW WASTE WATER	(XX) OTHER Air Emission

Sample Collectors: Harre | Date Collected: | Weather:

Project Descr./Name: NAD Alameda | Containers Supplied by: ____ Lab X Client

Container ID	Sample Location/ Description	Lab Number	Time Sampled	GRAB	COMP	Sample Type	Total No. of Containers	ANALYSES REQUESTED	REMARKS (PRESERVED, ETC.)
L-MID-2	chrome in 1N NaOH solution	E29730				XX		As per Contract Cr-ICP	
L-MID-1	"	731				XX		"	
L-out-1	"	732				XX		"	
L-out-2	"	733				XX		"	
M-MID-1	"	734				"		"	
M-MID-2	"	735				"		"	
M-out-1	"	736				"		"	
M-out-2	"	737				"		"	

Relinquished By: Signature/Company	Date	Time	Received By: Signature/Company	Date	Time	Reason for Transfer
Bryan Harre	7/29/92	5:00pm	Linda Nunt	8/3/92	1:41pm	Analysis

CHAIN OF CUSTODY RECORD

Form F-223, 10/90

COLLECTORS' AFFILIATION	Billed Client: Naval Energy + Environmental Support	SAMPLE TYPE (Use Code in Sample Type Col.)	
☒ Geochemical Testing Division	Address: 1001 LYONS ST Suite 1	GW GROUND WATER	SO SOIL
☐ Earthtech Inc.	City: Port Hueneme State: CA Zip: 93043	SW SURFACE WATER	SL SLUDGE
☐ Other _____	Contact: Bryan Harre	PW POTABLE WATER	HZ HAZARDOUS
	Phone: (805) 982-3542 Fax: 805-982-5388	WW WASTE WATER	(XX) OTHER Air Emission

Sample Collectors: Harre | Date Collected: | Weather:

Project Descr./Name: NAD Alameda | Containers Supplied by: ____ Lab X Client

Container ID	Sample Location/ Description	Lab Number	Time Sampled	GRAB	COMP	Sample Type	Total No. of Containers	ANALYSES REQUESTED	REMARKS (PRESERVED, ETC.)
G-MID-1	Chrome in .1N NaOH Solution	629738				XX		As per contract	
G-Out-1	"	739				"			
G-out-2	"	740				"			
NaOH Blank	"	741				"			
QA-1	"	742				"			
QA-2	"	743				"			
QA-3	"	744				"			

Relinquished By: Signature/Company	Date	Time	Received By: Signature/Company	Date	Time	Reason for Transfer
			Linda Hunt	8/3/92	1:41p	Analysis

GEOCHEMICAL TESTING
a division of Energy Center, Inc.

RD2, Box 124
Somerset, PA 15501

814/443-1671
814/445-6666
FAX: 814/445-6729

REPORT OF ANALYSIS

Client: Naval Energy & Environmental

LAB NO.: 92-E29739

Report Date: 08/13/92

Date Sampled: 07/29/92

Sampled By: Client

Description: C-OUT-1
NAD Alameda
REVISED REPORT - Lower Detection Limit

Inorganic Metals

Analyte	Result	Units	Method
Chromium	< 0.002	mg/l	EPA 218.2

Forrest E. Walker

Forrest E. Walker
Director of Technical Services

GEOCHEMICAL TESTING
a division of Energy Center, Inc.

RD2, Box 124
Somerset, PA 15501

814/443-1671
814/445-6666
FAX: 814/445-6729

REPORT OF ANALYSIS

Client: Naval Energy & Environmental

LAB NO.: 92-E29740

Report Date: 08/13/92

Date Sampled: 07/29/92

Sampled By: Client

Description: G-OUT-2
NAD Alameda
REVISED REPORT - Lower Detection Limit

Inorganic Metals

Analyte	Result	Units	Method
Chromium	< 0.002	mg/l	EPA 218.2

Forrest E. Walker
Director of Technical Services

GEOCHEMICAL TESTING
a division of Energy Center, Inc.

RD2, Box 124
Somerset, PA 15501

814/443-1671
814/445-6666
FAX: 814/445-6729

REPORT OF ANALYSIS

Client: Naval Energy & Environmental

LAB NO.: 92-E29741

Report Date: 08/13/92

Date Sampled: 07/29/92

Sampled By: Client

Description: NaOH Blank
NAD Alameda
REVISED REPORT - Lower Detection Limit

Inorganic Metals

Analyte	Result	Units	Method
Chromium	< 0.002	mg/l	EPA 218.2

Forrest E. Walker
Director of Technical Services

GEOCHEMICAL TESTING
a division of Energy Center, Inc.

RD2, Box 124
Somerset, PA 15501

814/443-1671
814/445-6666
FAX: 814/445-6729

REPORT OF ANALYSIS

Client: Naval Energy & Environmental LAB NO.: 92-E29732

Report Date: 08/17/92

Date Sampled: 07/29/92

Sampled By: Client

Description: L-OUT-1
NAD Alameda
REVISED REPORT: Lower Detection Limits

Inorganic Metals

Analyte	Result	Units	Method
Chromium	0.002	mg/l	EPA 218.2

Forrest E. Walker
Director of Technical Services

GEOCHEMICAL TESTING
a division of Energy Center, Inc.

RD2, Box 124
Somerset, PA 15501
814/443-1671
814/445-6666
FAX: 814/445-6729

REPORT OF ANALYSIS

Client: Naval Energy & Environmental

LAB NO.: 92-E29733

Report Date: 08/17/92

Date Sampled: 07/29/92

Sampled By: Client

Description: L-OUT-2
NAD Alameda
REVISED REPORT: Lower Detection Limits

Inorganic Metals

Analyte	Result	Units	Method
Chromium	0.003	mg/l	EPA 218.2

Forrest E. Walker
Director of Technical Services

GEOCHEMICAL TESTING
a division of Energy Center, Inc.

RD2, Box 124
Somerset, PA 15501

814/443-1671
814/445-6666
FAX: 814/445-6729

REPORT OF ANALYSIS

Client: Naval Energy & Environmental

LAB NO.: 92-E29736

Report Date: 08/17/92

Date Sampled: 07/29/92

Sampled By: Client

Description: M-OUT-1
NAD Alameda
REVISED REPORT: Lower Detection Limits

Inorganic Metals

Analyte	Result	Units	Method
Chromium	0.002	mg/l	EPA 218.2

Forrest E. Walker
Director of Technical Services

GEOCHEMICAL TESTING
a division of Energy Center, Inc.

RD2, Box 124
Somerset, PA 15501

814/443-1671
814/445-6666
FAX: 814/445-6729

REPORT OF ANALYSIS

Client: Naval Energy & Environmental

LAB NO.: 92-E29737

Report Date: 06/17/92

Date Sampled: 07/29/92

Sampled By: Client

Description: M-OUT-2
NAD Alameda
REVISED REPORT: Lower Detection Limits

Inorganic Metals

Analyte	Result	Units	Method
Chromium	0.002	mg/l	EPA 218.2

Forrest E. Walker
Director of Technical Services

GEOCHEMICAL TESTING
a division of Energy Center, Inc.

RD2, Box 124
Somerset, PA 15501

814/443-1671
814/445-6666
FAX: 814/445-6729

REPORT OF ANALYSIS

Client: Naval Energy & Environmental

LAB NO.: 92-E29730

Report Date: 08/06/92

Date Sampled: 07/29/92

Sampled By: Client

Description: L-MID-2
NAD Alameda

Inorganic Metals

Analyte	Result	Units	Method
Chromium	0.25	mg/l	EPA 200.7

Forrest E. Walker
Director of Technical Services

GEOCHEMICAL TESTING
a division of Energy Center, Inc.

RD2, Box 124
Somerset, PA 15501

814/443-1671
814/445-6666
FAX: 814/445-6729

REPORT OF ANALYSIS

Client: Naval Energy & Environmental

LAB NO.: 92-E29731

Report Date: 08/06/92

Date Sampled: 07/29/92

Sampled By: Client

Description: L-MID-1
NAD Alameda

Inorganic Metals

Analyte	Result	Units	Method
Chromium	0.26	mg/l	EPA 200.7

Forrest E. Walker
Director of Technical Services

GEOCHEMICAL TESTING
a division of Energy Center, Inc.

RD2, Box 124
Somerset, PA 15501

814/443-1671
814/445-6666
FAX: 814/445-6729

REPORT OF ANALYSIS

Client: Naval Energy & Environmental

LAB NO.: 92-E29732

Report Date: 08/06/92

Date Sampled: 07/29/92

Sampled By: Client

Description: L-OUT-1
NAD Alameda

Inorganic Metals

Analyte	Result	Units	Method
Chromium	< 0.01	mg/l	EPA 200.7

Forrest E. Walker
Director of Technical Services

GEOCHEMICAL TESTING
a division of Energy Center, Inc.

RD2, Box 124
Somerset, PA 15501

814/443-1671
814/445-6666
FAX: 814/445-6729

REPORT OF ANALYSIS

Client: Naval Energy & Environmental

LAB NO.: 92-E29733

Report Date: 08/06/92

Date Sampled: 07/29/92

Sampled By: Client

Description: L-OUT-2
NAD Alameda

Inorganic Metals

Analyte	Result	Units	Method
Chromium	< 0.01	mg/l	EPA 200.7

Forrest E. Walker
Director of Technical Services

GEOCHEMICAL TESTING
a division of Energy Center, Inc.

RD2, Box 124
Somerset, PA 15501

814/443-1671
814/445-6666
FAX: 814/445-6729

REPORT OF ANALYSIS

Client: Naval Energy & Environmental

LAB NO.: 92-E29734

Report Date: 08/06/92

Date Sampled: 07/29/92

Sampled By: Client

Description: M-MID-1
NAD Alameda

Inorganic Metals

Analyte	Result	Units	Method
Chromium	0.22	mg/l	EPA 200.7

Forrest E. Walker
Director of Technical Services

GEOCHEMICAL TESTING
a division of Energy Center, Inc.

RD2, Box 124
Somerset, PA 15501

814/443-1671
814/445-6666
FAX: 814/445-6729

REPORT OF ANALYSIS

Client: Naval Energy & Environmental

LAB NO.: 92-E29735

Report Date: 08/06/92

Date Sampled: 07/29/92

Sampled By: Client

Description: M-MID-2
NAD Alameda

Inorganic Metals

Analyte	Result	Units	Method
Chromium	0.20	mg/l	EPA 200.7

Forrest E. Walker

Forrest E. Walker
Director of Technical Services

GEOCHEMICAL TESTING
a division of Energy Center, Inc.

RD2, Box 124
Somerset, PA 15501

814/443-1671
814/445-6666
FAX: 814/445-6729

REPORT OF ANALYSIS

Client: Naval Energy & Environmental

LAB NO.: 92-E29736

Report Date: 08/06/92

Date Sampled: 07/29/92

Sampled By: Client

Description: M-OUT-1
NAD Alameda

Inorganic Metals

Analyte	Result	Units	Method
Chromium	< 0.01	mg/l	EPA 200.7

Forrest E. Walker
Director of Technical Services

GEOCHEMICAL TESTING
a division of Energy Center, Inc.

RD2, Box 124
Somerset, PA 15501

814/443-167
814/445-6666
FAX: 814/445-672

REPORT OF ANALYSIS

Client: Naval Energy & Environmental

LAB NO.: 92-E29737

Report Date: 08/06/92

Date Sampled: 07/29/92

Sampled By: Client

Description: M-OUT-2
NAD Alameda

Inorganic Metals

Analyte	Result	Units	Method
Chromium	< 0.01	mg/l	EPA 200.7

Forrest E. Walker
Director of Technical Services

GEOCHEMICAL TESTING
a division of Energy Center, Inc.

RD2, Box 124
Somerset, PA 15501

814/443-1671
814/445-6666
FAX: 814/445-6729

REPORT OF ANALYSIS

Client: Naval Energy & Environmental

LAB NO.: 92-E29738

Report Date: 08/06/92

Date Sampled: 07/29/92

Sampled By: Client

Description: G-MID-1
NAD Alameda

Inorganic Metals

Analyte	Result	Units	Method
Chromium	0.13	mg/l	EPA 200.7

Forrest E. Walker

Forrest E. Walker
Director of Technical Services

GEOCHEMICAL TESTING
a division of Energy Center, Inc.

RD2, Box 124
Somerset, PA 15501

814/443-1671
814/445-6666
FAX: 814/445-6729

REPORT OF ANALYSIS

Client: Naval Energy & Environmental

LAB NO.: 92-E29739

Report Date: 08/07/92

Date Sampled: 07/29/92

Sampled By: Client

Description: G-OUT-1
NAD Alameda

Inorganic Metals

Analyte	Result	Units	Method
Chromium	0.005	mg/l	EPA 218.2

Forrest E. Walker
Director of Technical Services

GEOCHEMICAL TESTING
a division of Energy Center, Inc.

RD2, Box 124
Somerset, PA 15501

814/443-1671
814/445-6666
FAX: 814/445-6729

REPORT OF ANALYSIS

Client: Naval Energy & Environmental

LAB NO.: 92-E29740

Report Date: 08/07/92

Date Sampled: 07/29/92

Sampled By: Client

Description: C-OUT-2
NAD Alameda

Inorganic Metals

Analyte	Result	Units	Method
Chromium	0.005	mg/l	EPA 218.2

Forrest E. Walker
Director of Technical Services

Forrest E. Walker
Director of Technical Services

GEOCHEMICAL TESTING
a division of Energy Center, Inc.

RD2, Box 124
Somerset, PA 15501

814/443-1671
814/445-6666
FAX: 814/445-6729

REPORT OF ANALYSIS

Client: Naval Energy & Environmental

LAB NO.: 92-E29742

Report Date: 08/06/92

Date Sampled: 07/29/92

Sampled By: Client

Description: QA-1
NAD Alameda

Inorganic Metals

Analyte	Result	Units	Method
Chromium	< 0.01	mg/l	EPA 200.7

Forrest E. Walker
Director of Technical Services

GEOCHEMICAL TESTING
a division of Energy Center, Inc.

RD2, Box 124
Somerset, PA 15501

814/443-1671
814/445-6666
FAX: 814/445-6729

REPORT OF ANALYSIS

Client: Naval Energy & Environmental

LAB NO.: 92-E29743

Report Date: 08/10/92

Date Sampled: 07/29/92

Sampled By: Client

Description: QA-2
NAD Alameda

Inorganic Metals

Analyte	Result	Units	Method
Chromium	0.12	mg/l	EPA 200.7

Forrest E. Walker
Director of Technical Services

GEOCHEMICAL TESTING
a division of Energy Center, Inc.

RD2, Box 124
Somerset, PA 15501

814/443-1671
814/445-6666
FAX: 814/445-6729

REPORT OF ANALYSIS

Client: Naval Energy & Environmental

LAB NO.: 92-E29744

Report Date: 08/10/92

Date Sampled: 07/29/92

Sampled By: Client

Description: QA-3
NAD Alameda

Inorganic Metals

Analyte	Result	Units	Method
Chromium	0.07	mg/l	EPA 200.7

Forrest E. Walker
Director of Technical Services

TMA
Thermo Analytical Inc.

TMA/Norcal 2030 Wright Avenue / P.O. Box 4040 / Richmond, CA 94804-0040 / (415) 235-2633 / FAX (415) 235-0438

Chain of Custody

CLIENT: NEESA
ADDRESS: Commanding Officer, NEESA Code 111C1 / Harre, Port Hueneme CA 93043
PROJECT: Alameda Chrome Test
SAMPLERS (SIGNATURE):

DATE 6/12/92 PAGE 2 OF 2

SAMPLE NO	DATE	TIME	LOCATION	PARAMETERS: Total Chrom Carb 425	SAMPLE TYPE OR MATRIX (e.g. water soil, filters, charcoal tube, asbestos, oil)	# CONTAINERS	OBSERVATIONS, COMMENTS, VOLUMES, SPECIAL OR ADDITIONAL TESTS
L-mid-1	6-12-92	9:15		✓			Note: These samples
L-mid-2	6-12-92	9:15		✓			require a two week
G-mid-1	6-12-92	9:15		✓			turn-around time
QA-1	6-12-92	9:15		✓			
QA-2	6-12-92	9:15		✓			Required detection
QA-3	6-12-92	9:15		✓			Limit 3 ppb (ug/L)
TL-3,4	6-12-92	9:15		✓			
TL-1	6-12-92	9:15		✓			
TL-2	6-12-92	9:15		✓			

1) RELINQUISHED BY: Signature	DATE	2) RECEIVED BY: Signature	DATE	3) RELINQUISHED BY: Signature	DATE	4) RECEIVED BY: Signature	DATE
Bryan Harre	6/12/92						
Printed Name: Bryan Harre	TIME	Printed Name	TIME	Printed Name	TIME	Printed Name	TIME
Company: NEESA	9:15	Company		Company		Company	

5) RELINQUISHED BY: Signature	DATE	6) RECEIVED BY: Signature	DATE	7) RELINQUISHED BY: Signature	DATE	RECEIVED BY (Laboratory) Signature	DATE
						Kermit Blum	6-12-92
Printed Name	TIME	Printed Name	TIME	Printed Name	TIME	Printed Name: Kermit Blum, TMA/Norcal	TIME 0940
Company		Company		Company			

TOTAL NUMBER OF CONTAINERS

METHOD OF SHIPMENT

SPECIAL SHIPMENT-HANDLING OR STORAGE REQUIREMENTS

Thermo Analytical Inc.

TMA/Norcal 2030 Wright Avenue / P.O. Box 4040 / Richmond, CA 94804-0040 / (415) 235-2633 / FAX (415) 235-0438

Chain of Custody

CLIENT ADDRESS: NEESA
Commanding Officer
NEESA Code 111C / Harre
Port Hueneme, CA 93043

PROJECT: Alameda Chrome test

SAMPLERS (SIGNATURE):

DATE 12 JUNE 92 PAGE 1 OF 2

SAMPLE NO	DATE	TIME	LOCATION	TOTAL CHROME CARB 423	SAMPLE TYPE OR MATRIX (e.g. water soil, filters, charcoal tube, asbestos, oil)	# CONTAINERS	OBSERVATIONS, COMMENTS, VOLUMES, SPECIAL OR ADDITIONAL TESTS
E-out-1	6-12-92	9:15		✓			
E-out-2	6-12-92	9:15		✓			NOTE: THESE SAMPLES
Na OH Flow	6-12-92	9:15		✓			REQUIRE A TWO WEEK
Scrubber G	6-12-92	9:15		✓			TURN-AROUND TIME
Scrubber M	6-12-92	9:15		✓			
Scrubber L	6-12-92	9:15		✓			REQUIRED DETECTION
M-out-1	6-12-92	9:15		✓			LIMIT 3ppb (ug/L)
M-out-2	6-12-92	9:15		✓			
L-out-1	6-12-92	9:15		✓			
L-out-2	6-12-92	9:15		✓			
M-mid-1	6-12-92	9:15		✓			
M-mid-2	6-12-92	9:15		✓			

1) RELINQUISHED BY: Signature	DATE	2) RECEIVED BY: Signature	DATE	3) RELINQUISHED BY: Signature	DATE	4) RECEIVED BY: Signature	DATE
Bryan Harre	6-12-92						
Printed Name: Bryan Harre	TIME	Printed Name	TIME	Printed Name	TIME	Printed Name	TIME
Company: NEESA		Company		Company		Company	

5) RELINQUISHED BY: Signature	DATE	6) RECEIVED BY: Signature	DATE	7) RELINQUISHED BY: Signature	DATE	RECEIVED BY (Laboratory) Signature	DATE
						Kermit Blum	6-12-92
Printed Name	TIME	Printed Name	TIME	Printed Name	TIME	Printed Name: Kermit Blum TMA/Norcal	TIME 0140
Company		Company		Company			

TOTAL NUMBER OF CONTAINERS

METHOD OF SHIPMENT

SPECIAL SHIPMENT-HANDLING OR STORAGE REQUIREMENTS

Received: 06/16/92

TMA Inc. REPORT

06/30/92 16:34:18

Work Order # A2-06-046

REPORT TO: TMA/NORCAL
2030 Wright Avenue
Richmond, CA 94804

ATTEN: Sample Control

CLIENT: TMA NORCAL SAMPLES: 22
COMPANY: TMA/NORCAL
FACILITY: Richmond,CA

WORK ID: N2-06-076 NEESA
TAKEN: By TMA Staff
TRANS: Federal Express
TYPE: Liquid
P.O. #: N2-06-076-SU-AR
INVOICE: under separate cover

PREPARED BY: Thermo Analytical, Inc.
160 Taylor Street
Monrovia, CA 91016

ATTEN: Ms. Carole Harris
PHONE: 818-357-3247

CERTIFIED BY: Ernesto Vazquez

CONTACT: EVV

This report is for the sole and exclusive use of the client to whom it is addressed and represents only those samples herein described. Samples not destroyed in testing are retained a maximum of 30 days unless otherwise requested.

SAMPLE IDENTIFICATION

01 G-OUT-1
02 G-OUT-2
03 NaOH BLANK
04 SCRUBBER-G
05 SCRUBBER-M
06 SCRUBBER-L
07 M-OUT-1
08 M-OUT-2
09 L-OUT-1
10 L-OUT-2
11 M-MID-1
12 M-MID-2
13 L-MID-1
14 L-MID-2
15 G-MID-1
16 QA-1
17 QA-2
18 QA-3
19 TL-3,4
20 TL-1
21 TL-2

TEST CODES and NAMES used on this workorder

CR L	Chromium - Liquids
MPREPW	Metals Prep. - Liquid
VOLUME	Sample Volume

Received: 06/16/92 06/30/92 16:34:18

SAMPLE IDENTIFICATION

22 Lab Blank

TMA/ARLI 160 Taylor Street / Monrovia, CA 91016 / (818) 357-3247 / FAX (818) 359-5036

Received: 06/16/92

TMA Inc. REPORT
Results by Sample

Work Order # A2-06-046

SAMPLE ID G-OUT-1
SAMPLE # 01 FRACTIONS: A
Date & Time Collected 06/10/92 Category
CR L 0.010 mg/L VOLUME 275 mls

SAMPLE ID G-OUT-2
SAMPLE # 02 FRACTIONS: A
Date & Time Collected 06/10/92 Category
CR L 0.010 mg/L VOLUME 326 mls

SAMPLE ID NaOH BLANK
SAMPLE # 03 FRACTIONS: A
Date & Time Collected not specified Category
CR L 0.011 mg/L VOLUME 322 mls

SAMPLE ID SCRUBBER-G
SAMPLE # 04 FRACTIONS: A
Date & Time Collected 06/10/92 Category
CR L 5.40 mg/L VOLUME 431 mls

Received: 06/16/92

Tma Inc. REPORT

Results by Sample

Work Order # A2-06-046

SAMPLE ID SCRUBBER-M

SAMPLE # 05 FRACTIONS: A

Date & Time Collected 06/10/92 Category

CR_L 236. mg/L VOLUME 450 mls

SAMPLE ID SCRUBBER-L

SAMPLE # 06 FRACTIONS: A

Date & Time Collected 06/10/92 Category

CR_L 388. mg/L VOLUME 378 mls

SAMPLE ID M-OUT-1

SAMPLE # 07 FRACTIONS: A

Date & Time Collected 06/09/92 Category

CR_L 0.114 mg/L VOLUME 372 mls

SAMPLE ID M-OUT-2

SAMPLE # 08 FRACTIONS: A

Date & Time Collected 06/09/92 Category

CR_L 0.016 mg/L VOLUME 322 mls

Received: 06/16/92

TMA Inc. REPORT
Results by Sample

Work Order # A2-06-046

SAMPLE ID L-OUT-1
SAMPLE # 09 FRACTIONS: A
Date & Time Collected not specified Category
CR_L 0.017 mg/L VOLUME 282 mls

SAMPLE ID L-OUT-2
SAMPLE # 10 FRACTIONS: A
Date & Time Collected not specified Category
CR_L 0.013 mg/L VOLUME 351 mls

SAMPLE ID M-MID-1
SAMPLE # 11 FRACTIONS: A
Date & Time Collected 06/09/92 Category
CR_L 0.225 mg/L VOLUME 302 mls

SAMPLE ID M-MID-2
SAMPLE # 12 FRACTIONS: A
Date & Time Collected not specified Category
CR_L 0.296 mg/L VOLUME 324 mls

Received: 06/16/92

Results by Sample

Work Order # A2-06-640

SAMPLE ID L-MID-1

SAMPLE # 13 FRACTIONS: A

Date & Time Collected 06/08/92 Category

CR_L 0.346 mg/L VOLUME 326 mls

SAMPLE ID L-MID-2

SAMPLE # 14 FRACTIONS: A

Date & Time Collected 06/08/92 Category

CR_L 0.320 mg/L VOLUME 279 mls

SAMPLE ID G-MID-1

SAMPLE # 15 FRACTIONS: A

Date & Time Collected 06/06/92 Category

CR_L 0.143 mg/L VOLUME 302 mls

SAMPLE ID QA-1

SAMPLE # 16 FRACTIONS: A

Date & Time Collected not specified Category

CR_L 0.019 mg/L VOLUME 250 mls

Received: 06/16/92

TMA Inc. REPORT
Results by Sample

Work Order # A2-06-046

SAMPLE ID QA-2
SAMPLE # 17 FRACTIONS: A
Date & Time Collected not specified Category
CR L 0.033 mg/L VOLUME 223 mls

SAMPLE ID QA-3
SAMPLE # 18 FRACTIONS: A
Date & Time Collected not specified Category
CR L 0.108 mg/L VOLUME 225 mls

SAMPLE ID TL-3,4
SAMPLE # 19 FRACTIONS: A
Date & Time Collected not specified Category
CR L 140,000. mg/L VOLUME 420 mls

SAMPLE ID TL-1
SAMPLE # 20 FRACTIONS: A
Date & Time Collected not specified Category
CR L 161,000. mg/L VOLUME 278 mls

Received: 06/16/92 Work order # A2-06-040

Results by Sample

SAMPLE ID TL-2 SAMPLE # 21 FRACTIONS: A

Date & Time Collected not specified Category

CR_L 153,000. mg/L VOLUME 270 mls

SAMPLE ID Lab Blank SAMPLE # 22 FRACTIONS: A

Date & Time Collected not specified Category

CR_L 0.007 mg/L VOLUME 25 mls

TMA/ARLI 160 Taylor Street / Monrovia, CA 91016 / (818) 357-3247 / FAX (818) 359-5036

Received: 06/16/92

IMA Inc. REPORT
Test Methodology

Work Order # A2-06-046

TEST CODE CR L NAME Chromium - Liquids

CR L "Chromium (AA, Direct Aspiration) Liquids"
Method 218.1
Methods for Chemical Analysis for Water and Waste

TEST CODE MPREPW NAME Metals Prep. - Liquid

MPREPW "Acid digestion of aqueous samples and extracts for total metals"

TEST CODE VOLUME NAME Sample Volume

Method not available.

AMPERE-HOUR CALCULATION SHEET
NAVAL AVIATION DEPOT, ALAMEDA
BUILDING 32, RECTIFIERS G-1, G-2
CHROMIC ACID ANODIZE
5/10/92, 6/11/92 LINE G

TESTS G-OUT-1, G-OUT-2

RECTIFIER	G-1	G-1	G-1	G-1	G-1	G-1	TOTAL	
LOAD	1	2	2	3	4	4		
INITIAL AMP-HR READING	48644.0	49158.5	49292.2	49685.4	49921.5	50015.1		
FINAL AMP-HR READING	49120.8	49284.5	49685.4	49921.5	50015.1	50246.6		
TOTAL AMP-HRS FOR LOAD	476.8	126.0	393.2	236.1	93.6	231.5		
TIME, HRS FOR LOAD	1.42	0.50	1.00	1.78	0.50	1.00	6.20	
TIME WEIGHTED AVERAGE AMPS	108.9	10.2	63.4	67.9	7.5	37.3	295.3	AVERAGE AMPS

AMPERE-HOUR CALCULATION SHEET
NAVAL AVIATION DEPOT, ALAMEDA
BUILDING 32, RECTIFIERS G-1, G-2
CHROMIC ACID ANODIZE
5/10/92 LINE G

TEST G-MID-1

RECTIFIER	G-1	G-1	TOTAL	
LOAD	1	2		
INITIAL AMP-HR READING	48644.0	49158.5		
FINAL AMP-HR READING	49120.8	49284.5		
TOTAL AMP-HRS FOR LOAD	476.8	126.0		
TIME, HRS FOR LOAD	1.42	0.50	1.92	
TIME WEIGHTED AVERAGE AMPS	352.4	32.9	385.3	AVERAGE AMPS

AMPERE-HOUR CALCULATION SHEET
NAVAL AVIATION DEPOT, ALAMEDA
BUILDING 32, RECTIFIERS L-1, L-2, L-3, L-4
HARD CHROME PLATE
5/8/92, LINE L

TESTS L-OUT-1, L-OUT-2, L-MID-1, L-MID-2

RECTIFIER	L-1	L-2	L-3	L-4	TOTAL	
AVERAGE AMP READING	1510.0	2490.0	500	1500	6000	AVERAGE AMPS

AMPERE-HOUR CALCULATION SHEET
NAVAL AVIATION DEPOT, ALAMEDA
BUILDING 32, RECTIFIERS M-2, M-3, M-4
HARD CHROME PLATE
5/9/92, LINE M

TESTS M-OUT-1, M-OUT-2, M-MID-1, M-MID-2

RECTIFIER	M-2	M-3	M-4	TOTAL	
AVERAGE AMP READING	1010.0	1520.0	1520.0	4050.0	AVERAGE AMPS

EMISSION RESULTS
SAMPLE CALCULATIONS
TEST M-OUT-1 (TOTAL CHROMIUM)

CHROMIUM WEIGHT = analysis volume (l) * lab analysis (mg/l)]

Example:
Emission Weight = 0.4092 (l) * 0.002 (mg/l)] = 0.00082 (mg)

EMISSION CONCENTRATION = chromium weight (mg) / air sample volume (DSCF)

Example:
Emission Concentration = 0.00082 (mg) / 392.988 (DSCF)
= 2.0825E-6 (mg/DSCF)

EMISSION RATE = emission concentration (mg/DSCF) * stack flow rate (DSCFM) * 60 (min/hr)

Example:
Emission Rate = 2.0825E-6 (mg/DSCF) * 16429.429 (DSCFM) * 60 (min/hr) = 2.05 (mg/hr)

EMISSION RATE = emission rate (mg/hr) / average amperes (Amp)

Example:
Emission Rate = 2.05 (mg/hr) / 4050 (Amp) = 0.0005 (mg/Amp-hr)

APPENDIX E

"NOMOKIN" SAMPLING PROGRAM
EPA CONSTANTS AND EQUATIONS

THIS PAGE INTENTIONALLY LEFT BLANK

NOMOKIN CALCULATOR PROGRAM
MEMORY REGISTER ASSIGNMENTS

STO	ASSIGNED VARIABLE	UNITS	VARIABLE DESCRIPTION
00	(▲P)avg	in. H2O	Velocity pressure, latest average
01	(▲P)n	in. H2O	Velocity pressure at traverse point n
02	(Ts)n	°F	Stack temperature at traverse point n
03	(Tm)n	°F	Meter temperature at traverse point n
04	(Ts)n	°R	Stack temperature at traverse point n
05	(Tm)n	°R	Meter temperature at traverse point n
06	Σ√(▲P)	√(in. H2O)	Summation, velocity pressure square root
07	Σ√(▲P * Ts)	√("H2O-°R)	Kv factor
08	Σ(Ts)	°R	Summation, stack temperature
09	Σ(Tm)	°R	Summation, meter temperature
10	Σ(n)	N/A	Counter, traverse point number
11	Σ(Delta-H)	in. H2O	Summation, meter orifice pressure
12	▲H@	in. H2O	Meter orifice pressure @ 0.75 cfm rate
13	Y	N/A	Meter correction factor (Gamma)
14	Time	minutes	Intermediate check or final sampling time
15	Cp	N/A	Pitot tube coefficient
16	(▲H)avg	in. H2O	Meter orifice pressure, average
17	Vs	ft/s	Stack velocity, average
18	Dn	in.	Nozzle diameter
19	(Ts)avg	°R	Stack temperature, latest average
20	As	ft2	Stack area
21	(Vm)final	ft3	Intermediate/final meter volume
22	(Vm)initial	ft3	Initial meter volume
23	(Vm)std	ft3	Intermediate/final dry std sample volume
24	Ms	lb/lb-mole	Wet molecular weight of stack gas
25	(Tm)avg	°R	Meter temperature, latest average
26	Ps	in. HG	Stack pressure, absolute
27	Pb	in. HG	Barometric (ambient) pressure, absolute
28	1-BWS	N/A	Mole fraction of dry stack gas
29	H2O Gain	grams	Moisture gained by impinger train
01	%O2	%	Average O2 content of stack gas
02	%CO2	%	Average CO2 content of stack gas

Notes:
XEQ "SIZE" 030 before loading NOMOKIN into calculator.
Some storage registers are reused later in the program, ie. %O2.
Flags 01-05 are used to direct use of subroutines.
Flags must be clear before running NOMOKIN.

EPA CONSTANTS, VARIABLES, AND EQUATIONS

All constants, variables and EPA equations are from Code of Federal Regulations, Volume 40, Appendix A, Methods 1 through 5, dated July 1, 1990.

CONSTANTS, VARIABLES, AND CORRESPONDING UNITS

Variable	Description	Units
A_n	cross-sectional area of nozzle opening	ft^2
A_s	stack cross-sectional area	ft^2
B_{ws}	mole fraction of water vapor in the gas stream	lb/lb-mole
$1-B_{ws}$	mole fraction of dry stack gas	lb/lb-mole
ΔH	pressure differential across orifice meter	in. H_2O
%I	isokinetic sampling rate variation	%
M_s	wet molecular weight of stack gas	lb/lb-mole
M_d	dry molecular weight of stack gas	lb/lb-mole
P_b	barometric pressure	in. Hg
P_m	absolute dry gas meter pressure	in. Hg
P_s	absolute stack pressure	in. Hg
P_{sg}	static (gage) stack pressure	in. H_2O
Q_a	actual stack gas volumetric flow rate	acfm
Q_{sd}	dry standard stack gas volumetric flow rate	dscfm
Q_{nm}	gas sample nozzle flow rate, dry @T_m and P_m	cfm
Q_m	gas sample dry gas meter flow rate	cfm
T_m	dry gas meter temperature	°R
T_s	stack temperature	°R
V_{lc}	volume of liquid collected by impinger train	ml
V_m	sample volume indicated by dry gas meter	cf
$(V_m)_{std}$	dry standard gas sample volume	dscf
V_n	gas sample nozzle velocity (V_n=V_s for 100 %I)	ft/s
$(V_w)_{std}$	gas sample water vapor volume (@ T_{std} and P_{std})	scf
V_s	average stack gas velocity	ft/s
Y	dry gas meter calibration factor (gamma)	N/A

Constant	Description	Units
0.0471	conversion factor, H20 at standard conditions	cf/ml
0.0358	(4*144)/(π*85.49*60)	several units
0.0945	(P_{std} 100)/(T_{std} 60)	(in. Hg min)/(°R s)
0.75	ideal gas sample flow rate at dry gas meter	cfm
2.292	(4*144*0.75)/(π*60)	several units
13.6	conversion factor	in. H_2O/in. Hg
17.646	T_{std}/P_{std}	°R/in. Hg
60	conversion factor	s/min
85.49	pitot tube constant (ft/s)[(lb/lb-mole in. Hg)/(°R in. H20)]$^{1/2}$	
144	conversion factor	in^2/ft^2
846.72	orifice ΔH equation constant	units unknown
3600	conversion factor	s/hr
P_{std}	standard absolute pressure	29.92 in. Hg
T_{std}	standard absolute temperature	528 °R

DRY STANDARD GAS SAMPLE VOLUME, dscf

$$(V_m)_{std} = V_m Y \frac{T_{std} (P_m)_{avg}}{(T_m)_{avg} P_{std}} = 17.646 V_m Y \frac{(P_m)_{avg}}{T_m}$$ (EPA Method 5, Eq. 5-1)

MOLE FRACTION OF WATER VAPOR IN STACK GAS, DIMENSIONLESS

$$B_{ws} = \frac{(V_w)_{std}}{(V_m)_{std} + (V_w)_{std}}$$ (EPA Method 5, Eq. 5-3)

Where: Volume of water vapor in the gas sample, scf

$$(V_w)_{std} = 0.0471 V_{lc}$$ (EPA Method 5, Eq. 5-2)

PERCENT MOISTURE IN STACK GAS, BY VOLUME, %

$$\% H_2O = 100 B_{ws}$$

MOLECULAR WEIGHT OF DRY STACK GAS, lb/lb-mole

$$M_d = 0.44\%CO_2 + 0.32\%O_2 + 0.28(\%N_2 + \%CO)$$ (EPA Method 3, Eq. 3-2)

Substitute $\%N_2 = (100 - \%O_2 - \%CO_2)$, assume $\%CO = 0$, then

$$M_d = 0.16\%CO_2 + 0.04\%O_2 + 28$$ (Equation used by NOMOKIN)

MOLECULAR WEIGHT OF WET STACK GAS, lb/lb-mole

$$M_s = M_d(1 - B_{ws}) + 18 (B_{ws})$$ (EPA 450 Manual, Eq. 6-21)

PRESSURE CALCULATIONS, in. Hg

$$P_m = P_b + \Delta H/13.6$$

$$(P_m)_{avg} = P_b + ((\Delta H)_{avg}/13.6)$$

$$P_s = P_b + P_{sg}/13.6$$

STACK GAS VOLUMETRIC FLOW RATES, various units

Absolute stack gas flow rate, acfm

$$Q_a = 60\ V_s\ A_s$$ (Equation used by NOMOKIN)

Dry standard flow rate, dscfh

$$Q_{sd} = 3600\ (1-B_{ws})\ V_s\ A_s \left[\frac{T_{std}\ P_s}{P_{std}\ (T_s)_{avg}} \right]$$ (EPA Method 2, Eq. 2-10)

Dry standard flow rate, dscfm

$$Q_{sd} = 17.646\ Q_a\ (1-B_{ws}) \left[\frac{Ps}{(Ts)avg} \right]$$ (Equation used by NOMOKIN)

EXCESS AIR CALCULATION FOR BOILERS, %

$$\%EA = \frac{\%O_2 - 0.5\%CO}{0.264\%N2 - (\%O_2 - 0.5\%CO)}\ 100$$ (EPA Method 3, Eq. 3-1)

Substitute $\%N_2 = 100 - \%O_2 - \%CO_2$, assume $\%CO = 0$, then

$$\%EA = \frac{\%O2}{26.4 - 1.264\%O_2 - 0.264\%CO_2}\ 100$$ (Equation used by NOMOKIN)

ISOKINETIC SAMPLING RATE VARIATION, %

$$\%I = \frac{(T_s)_{avg}\ (V_m)_{std}\ P_{std}\ 100}{T_{std}\ V_s\ \theta\ A_n\ (P_s)\ 60\ (1-B_{ws})}$$ (EPA Method 5, Eq. 5-8)

$$\%I = \frac{0.0945\ (T_s)_{avg}\ (V_m)_{std}}{P_s\ V_s\ A_n\ \theta\ (1-B_{ws})}$$

Note: For intermediate isokinetics, "1-Bws" is calculated using estimated stack gas moisture content. For final isokinetic, "1-Bws" is calculated from the water collected in the impingers and silica gel.

APPENDIX F

EQUIPMENT CALIBRATION SHEETS

THIS PAGE INTENTIONALLY LEFT BLANK

DRY GAS METER CALIBRATION

BOX NUMBER: 18
DATE: 06-22-1992
BAROMETRIC PRESSURE: 29.960
OPERATOR: dP

LEAKRATE (CFM): 0.000

Delta-H	5.00	3.00	2.00	1.00	0.50
Avg Dry Gas Mtr Temp.	79.0	79.0	78.5	78.3	79.0
Avg Wet Test Mtr Temp	70.0	70.0	70.0	70.0	71.0
Init Dry Gas Mtr Vol.	993.627	999.762	6.902	13.031	19.152
Final Dry Gas Mtr Vol	998.737	1004.868	12.017	18.141	24.260
Net Dry Gas Mtr Vol..	5.110	5.106	5.115	5.110	5.108
Net Wet Test Mtr Vol.	5.000	5.000	5.000	5.000	5.000
Run Time (min.sec)...	4.01	5.04	6.20	8.39	12.06
GAMMA	0.983	0.989	0.988	0.991	0.992
DH@	1.779	1.699	1.771	1.652	1.621

Delta-H .....
Avg Dry Gas Mtr Temp.
Avg Wet Test Mtr Temp
Init Dry Gas Mtr Vol.
Final Dry Gas Mtr Vol
Net Dry Gas Mtr Vol..
Net Wet Test Mtr Vol.
Run Time (min.sec)...
GAMMA .....
DH@ .....

DRY GAS METER CALIBRATION

BOX NUMBER: 16
DATE: 07-01-1992
BAROMETRIC PRESSURE: 29.950
OPERATOR: Dp

LEAKRATE (CFM): 0.000

Delta-H	5.00	3.00	2.00	1.00	0.50
Avg Dry Gas Mtr Temp.	80.0	80.0	80.0	80.0	80.0
Avg Wet Test Mtr Temp	71.0	71.0	71.0	71.0	71.0
Init Dry Gas Mtr Vol.	957.838	963.921	970.998	979.097	985.187
Final Dry Gas Mtr Vol	962.903	968.972	976.073	984.174	990.243
Net Dry Gas Mtr Vol..	5.065	5.051	5.075	5.077	5.056
Net Wet Test Mtr Vol.	5.000	5.000	5.000	5.000	5.000
Run Time (min.sec)...	4.01	5.09	6.19	8.39	12.07
GAMMA	0.992	0.999	0.997	0.999	1.004
DH@	1.783	1.759	1.764	1.654	1.623

Delta-H .....
Avg Dry Gas Mtr Temp.
Avg Wet Test Mtr Temp
Init Dry Gas Mtr Vol.
Final Dry Gas Mtr Vol
Net Dry Gas Mtr Vol..
Net Wet Test Mtr Vol.
Run Time (min.sec)...
GAMMA .....
DH@ .....

DRY GAS METER CALIBRATION

BOX NUMBER: 17
DATE: 06-22-1992
BAROMETRIC PRESSURE: 29.980
OPERATOR: dP

LEAKRATE (CFM): 0.000

Delta-H	5.00	3.00	2.00	1.00	0.50
Avg Dry Gas Mtr Temp.	80.5	81.0	81.2	81.8	82.0
Avg Wet Test Mtr Temp	74.0	74.0	74.0	74.0	74.0
Init Dry Gas Mtr Vol.	52.260	58.271	64.279	70.287	76.297
Final Dry Gas Mtr Vol	57.263	63.277	69.286	75.293	81.312
Net Dry Gas Mtr Vol..	5.003	5.006	5.007	5.006	5.015
Net Wet Test Mtr Vol.	5.000	5.000	5.000	5.000	5.000
Run Time (min.sec)...	3.59	5.07	6.15	8.36	11.59
GAMMA	0.999	1.005	1.007	1.011	1.011
DH@	1.770	1.751	1.741	1.646	1.598

Delta-H .....
Avg Dry Gas Mtr Temp.
Avg Wet Test Mtr Temp
Init Dry Gas Mtr Vol.
Final Dry Gas Mtr Vol
Net Dry Gas Mtr Vol..
Net Wet Test Mtr Vol.
Run Time (min.sec)...
GAMMA .....
DH@ .....

APPENDIX G

RESUMES OF TEST PERSONNEL

RESUME

DREK A. NEWTON, P.E.	Mechanical Engineer
1984	B.S. Mechanical Engineering Cal Poly State University San Luis Obispo, CA
1984-1986	Research and Development Engineer VETCO Offshore, Inc. Ventura, CA
1987-Present	Mechanical Engineer Coal/Air Department Naval Energy and Environmental Support Activity Port Hueneme, CA

RESUME

Bryan Harre	Chemical Engineer
1990	B.S. Chemical Engineering Cal State University Long Beach Long Beach, CA
1991-Present	Chemical Engineer Coal/Air Department Naval Energy and Environmental Support Activity Port Hueneme, CA

RESUME

ROBERT W. SAUNDERS	Mechanical Engineer
1985-Present	Mechanical Engineer Coal/Air Department Naval Energy and Environmental Support Activity Port Hueneme, CA
1984	B.S. Civil and Environmental Engineering New Jersey Institute of Technology Newark, NJ
1983-1984	Structural Design Draftsman Research Cottrel, Inc. Somerville, NJ
1979-1982	Field Service Engineer Research-Cottrell, Inc. Somerville, NJ
1971	A.A.S. Electrical Engineering Technology Middlesex County College Edison, NJ

RESUME

CHARLES K. YEE, P.E. Mechanical Engineer

1963	B.S. Chemical Engineering Auburn University Auburn, AL
1969	M.S. Environmental Systems Engineering Clemson University Clemson, SC
1965-1972	Public Health Engineer Air Pollution Control Commission State Health Department Montgomery, AL
1972-Present	Chemical Engineer Coal/Air Department Naval Energy and Environmental Support Activity Port Hueneme, CA