Note: This is a reference cited in *AP 42, Compilation of Air Pollutant Emission Factors, Volume I Stationary Point and Area Sources.* AP42 is located on the EPA web site at www.epa.gov/ttn/chief/ap42/

The file name refers to the reference number, the AP42 chapter and section. The file name "ref02_c01s02.pdf" would mean the reference is from AP42 chapter 1 section 2. The reference may be from a previous version of the section and no longer cited. The primary source should always be checked.

AP-42 Section 12.20
Reference
Report Sect. 4
Reference 77

AMTEST

14603 N.E. 87th St.
Redmond, WA
98052

Fax: 206 883 3496

Tel: 206 885 1664

SOURCE EMISSION EVALUATION

JULY 14, 1989

Prepared For:

HYTEK FINISHES COMPANY
CHROME ABATEMENT EQUIPMENT
PERFORMANCE EVALUATION
KENT, WASHINGTON
MAY 18-19, 1989

Submitted by:

KRIS A. HANSEN
DIRECTOR, AIR QUALITY DIVISION

JAMES A. GUENTHOER
PROJECT ENGINEER

AM TEST, INC.
REDMOND, WASHINGTON

We certify that the information contained herein is accurate and complete to the best of our knowledge.

TABLE OF CONTENTS

	Pages
INTRODUCTION	1-2
SUMMARY OF RESULTS	3-10
CHROME ANODIZING TANK	3-4
Summary of Results - Chrome Anodizing Tank	4
HARD CHROME TANK #1 AND #2 SCRUBBER INLET AND OUTLET	5-7
Summary of Results - #1 and #2 Scrubber Inlet	6
Summary of Results - #1 and #2 Scrubber Outlet	7
HARD CHROME TANK #2 AND #3 SCRUBBER INLET AND OUTLET	8-10
Summary of Results - #3 and #4 Scrubber Inlet	9
Summary of Results - #3 and #4 Scrubber Outlet	10
DISCUSSION	11-19
METHODOLOGY REFERENCES	11
SAMPLING PROCEDURES	12-13
SAMPLE TRAIN	14-15
SAMPLE CLEAN-UP AND ANALYSIS	16-17
QUALITY ASSURANCE	18
CALCULATION OF RESULTS	19
Computer Printouts-Chrome Anodizing Tank	20-22
Computer Printouts-#1 and #2 Scrubber Inlet	23-24
Computer Printouts-#1 and #2 Scrubber Outlet	25-26
Computer Printouts-#3 and #4 Scrubber Inlet	27-28
Computer Printouts-#3 and #4 Scrubber Outlet	29-30
APPENDIX	
Amphere-hour/hour Data Provided by Hytek	31-33
Laboratory Analysis Data	34-35
Method 1 - Location of Traverse Points	36
Method 1 - Minimum Number of Traverse Points	37
Method 2 - Stack Gas Velocity	38
Method 3 - Molecular Weight & Excess Air Calc.	38
Method 4 - Stack Gas Moisture	39
Method 5 - Particulate Emission Conc. Calc.	40-41
Method 5 - Nomenclature	42-43
Method 1-5 - Sample Calculation Sheets	44-45
Sample Calculation of Hexavalent Chromium Emissions	46
Figure 1 - Method 5 Sample Train Schematic	47
Professional Resumes of Project Personnel	48-51
Am Test Laboratory - Information and Services	52-54
Air Quality Division Quality Assurance Plan	55-58
Am Test Laboratory Quality Assurance and Quality Control	59-62
Field Data Sheets	63-73

INTRODUCTION

The purpose of this source emission evaluation performed at Hytek Finishes Company in Kent, Washington was to quantify the hexavalent chromium (Cr^{+6}) levels in five (5) different ventilating air streams. Testing was performed on May 18, 1989 at the outlet of a chromic acid anodizing tank. Two (2) one-hour tests were performed while parts were in the bath, and one (1) two-hour test was performed while no parts were in the bath being anodized. Two (2) 2-hour tests were performed at both the inlet and outlet of the scrubber which controls emissions from the #1 and #2 hard chrome plating tanks on March 18, 1989. Two (2) 2-hour tests were performed at both the inlet and outlet of the scrubber which controls emissions from the #3 and #4 hard chrome plating tanks on March 19, 1989.

The sample method used is similar to EPA Method 5, which is detailed in the Title 40 Code of Federal Regulations, Part 60 (40 CFR 60), Appendix A. The sample train was modified to exclude the front-half filter and utilized 0.1 N sodium hydroxide (NaOH) solution in the impingers. A final back-half Teflon^{R} filter was connected in series to collect any Cr^{+6} which might break through the absorbing liquid. EPA Methods 1-4 were also performed at each site. Methods 1 and 2 were performed to determine the stack gas velocity and volumetric flow rate, Method 3 was performed to determine the molecular weight of the stack gas, and Method 4 was performed to determine the moisture content of the stack gas.

Mr. James A. Guenthoer and Ms. Jan M. Widmeyer of Am Test, Inc.'s Air Quality Division based in Redmond, Washington performed the field sampling and in-field clean-up. Am Test, Inc.'s Trace Metals Division performed the hexavalent

chromium analysis using a diphenylcarbazide colorimetric method. Data reduction, and final report preparation was performed by Mr. Kris A. Hansen, Ms. Angela F. Blaisdell, and Ms. Jan M. Widmeyer of Am Test. Mr. Clif Johnson of Hytek Finishes Company coordinated this project and provided process operation information during each test.

SUMMARY OF RESULTS

During this testing program, hexavalent chromium (Cr^{+6}) levels were quantified at five (5) ventilating air streams at Hytek Finishes Company in Kent, Washington. The results of tests conducted at each site are discussed in the following sections.

CHROME ANODIZING TANK

Testing was performed on May 18, 1989 at the outlet of the chromic acid anodizing tank, which is an uncontrolled emission source. Two (2) one-hour tests were performed while parts were in the bath (runs 1 and 3), and one (1) two-hour test was performed while no parts were in the bath being anodized (run 2). The emission concentration, emission rate and emission factor are presented on page 4 in a printout titled "Methods 1-4/Hexavalent Chromium - Summary of Results", and in Table 1 below:

Table 1. Summary of Cr^{+6} emissions tests performed May 18, 1989 at the outlet of the chromic acid anodizing tank at Hytek.

Chromic Acid Anodizing Tank			
SAMPLE RUN #	INLET mg/amp-hr	OUTLET mg/amp-hr	REMOVAL EFFICIENCY %
1	NA	16.59	NA
2	NA	NA	NA
3	NA	7.40	NA
AVG.	NA	12.00	NA

Computer printouts which detail the complete results from these runs may be found on pages 20-22.

METHODS 1-4/HEXAVALENT CHROMIUM - SUMMARY OF RESULTS
AM TEST, INC. - AIR QUALITY DIVISION

FILE NAME:	HTKCRSUM
CLIENT:	HYTEK
LOCATION:	KENT, WASHINGTON
SAMPLE SITE:	CHROME ANODIZING TANK
OPERATORS:	GUENTHOER/WIDMEYER
CONTACT:	C. JOHNSON

	RUN #1	RUN #2	RUN #3	AVERAGE*
LAB #:	907735	907736	907737	
DATE:	5/18	5/18	5/18	
START TIME:	16:43	17:55	20:38	
STOP TIME:	17:43	19:55	21:38	
SAMPLE TIME (Minutes):	60.0	120.0	60.0	
VOLUME SAMPLED (Cubic Feet):	39.423	79.959	39.930	39.677
VOLUME SAMPLED (Dry Std. Cubic Feet):	38.580	77.428	39.255	38.918
STACK GAS MOISTURE (Percent):	1.15	1.04	1.24	1.20
BAROMETRIC PRESURE (Inches of Hg):	30.16	30.16	30.12	30.14
STATIC PRESSURE (Inches of H2O):	-6.80	-6.80	-6.80	-6.80
STACK PRESSURE (Inches of Hg):	29.66	29.66	29.62	29.64
STACK TEMPERATURE (Degrees F.):	72.1	71.0	68.4	70.3
STACK TEMPERATURE (Degrees R.):	532.1	531.0	528.4	530.3
CARBON DIOXIDE (Percent):	0.0	0.0	0.0	0.0
OXYGEN (Percent):	20.9	20.9	20.9	20.9
CARBON MONOXIDE (ppm):	0	0	0	0.0
MOLECULAR WEIGHT (Dry, Lb/Lb-Mole):	28.84	28.84	28.84	28.84
MOLECULAR WEIGHT (Wet, Lb/Lb-Mole):	28.71	28.72	28.70	28.71
AVERAGE VELOCITY HEAD (Inches of H2O):	0.850	0.855	0.865	0.858
PITOT TUBE Cp:	0.80	0.80	0.80	
VELOCITY (Feet/Second):	49.83	49.91	50.14	49.99
STACK DIAMETER (Inches):	36.0	36.0	36.0	
STACK AREA (Square Feet):	7.069	7.069	7.069	
AIRFLOW (Dry Std. Cubic Feet per Min.):	20552.1	20649.8	20774.7	20663.4
AIRFLOW (Actual Cubic Feet per Min.):	21135.0	21168.6	21266.4	21200.7
NOZZLE DIAMETER (Inches):	0.206	0.206	0.206	
ISOKINETICS (Percent):	96	95	96	96
HEX. CHROMIUM CONCENTRATION (MG/DSCM):	0.169	0.006	0.075	0.122
HEX. CHROMIUM IN SAMPLE (PPM):	0.078	0.003	0.035	0.057
HEX. CHROMIUM EMISSION RATE (mg/hr):	5906.5	197.8	2634.0	4270.3
AMPHERE HOURS PER HOUR (amp-hr/hr):	356	0	356	356
HEX. CHROMIUM EMISS. FACTOR (mg/amp-hr):	16.59	NA	7.40	12.00

* Average reflects runs 1 and 3 when parts were being anodized.

HARD CHROME TANK #1 AND #2 SCRUBBER INLET AND OUTLET

Testing was performed on May 18, 1989 at the inlet and outlet of the scrubber which controls emissions from hard chrome tanks #1 and #2. Two (2) 2-hour tests were performed at both the inlet and outlet of the scrubber which controls emissions from the tanks. The emission concentration, emission rate and emission factor are presented on pages 6 and 7 in printouts titled "Methods 1-4/Hexavalent Chromium - Summary of Results", and in Table 2 below:

Table 2. Summary of Cr^{+6} emissions tests performed May 18, 1989 at the inlet and outlet of the scrubber for chrome tanks #1 and #2 at Hytek.

#1 and #2 Hard Chrome Tanks			
SAMPLE RUN #	SCRUBBER INLET mg/amp-hr	SCRUBBER OUTLET mg/amp-hr	REMOVAL EFFICIENCY %
1	21.84	0.15	99.3
2	5.30	0.45	91.5
AVG.	13.57	0.30	95.4

Computer printouts which detail the complete results from these runs may be found on pages 23-26.

METHODS 1-4/HEXAVALENT CHROMIUM - SUMMARY OF RESULTS
AM TEST, INC. - AIR QUALITY DIVISION

FILE NAME:	HTCRSUM1
CLIENT:	HYTEK
LOCATION:	KENT, WASHINGTON
SAMPLE SITE:	SCRUBBER 1&2 INLET
OPERATORS:	GUENTHOER/WIDMEYER
CONTACT:	C. JOHNSON

	RUN #1	RUN #2	AVERAGE
LAB #:	907731	907732	
DATE:	5/18	5/18	
START TIME:	09:57	12:45	
STOP TIME:	11:57	14:45	
SAMPLE TIME (Minutes):	120.0	120.0	
VOLUME SAMPLED (Cubic Feet):	104.036	106.915	105.476
VOLUME SAMPLED (Dry Std. Cubic Feet):	106.175	106.899	106.537
STACK GAS MOISTURE (Percent):	1.44	1.45	1.45
BAROMETRIC PRESURE (Inches of Hg):	30.20	30.20	30.20
STATIC PRESSURE (Inches of H2O):	-2.90	-2.90	-2.90
STACK PRESSURE (Inches of Hg):	29.99	29.99	29.99
STACK TEMPERATURE (Degrees F.):	67.0	71.8	69.4
STACK TEMPERATURE (Degrees R.):	527.0	531.8	529.4
CARBON DIOXIDE (Percent):	0.0	0.0	0.0
OXYGEN (Percent):	20.9	20.9	20.9
CARBON MONOXIDE (ppm):	0	0	0
MOLECULAR WEIGHT (Dry, Lb/Lb-Mole):	28.84	28.84	28.84
MOLECULAR WEIGHT (Wet, Lb/Lb-Mole):	28.68	28.68	28.68
AVERAGE VELOCITY HEAD (Inches of H2O):	0.126	0.127	0.127
PITOT TUBE Cp:	0.80	0.80	
VELOCITY (Feet/Second):	19.04	19.13	19.09
STACK DIAMETER (Inches):	36.0	36.0	
STACK AREA (Square Feet):	7.069	7.069	
AIRFLOW (Dry Std. Cubic Feet per Min.):	7991.2	7959.1	7975.2
AIRFLOW (Actual Cubic Feet per Min.):	8074.5	8115.2	8094.9
NOZZLE DIAMETER (Inches):	0.375	0.375	
ISOKINETICS (Percent):	102	103	103
HEX. CHROMIUM CONCENTRATION (MG/DSCM):	8.527	1.133	4.830
HEX. CHROMIUM IN SAMPLE (PPM):	3.945	0.524	2.235
HEX. CHROMIUM EMISSION RATE (mg/hr):	115757.0	15321.4	65539.2
AMPHERE HOURS PER HOUR (amp-hr/hr):	5300	2889	4095
HEX. CHROMIUM EMISS. FACTOR (mg/amp-hr):	21.84	5.30	13.57

METHODS 1-4/HEXAVALENT CHROMIUM - SUMMARY OF RESULTS
AM TEST, INC. - AIR QUALITY DIVISION

FILE NAME:	HTCRSUM2
CLIENT:	HYTEK
LOCATION:	KENT, WASHINGTON
SAMPLE SITE:	SCRUBBER 1&2 OUTLET
OPERATORS:	GUENTHOER/WIDMEYER
CONTACT:	C. JOHNSON

	RUN #1	RUN #2	AVERAGE
LAB #:	907733	907734	
DATE:	5/18	5/18	
START TIME:	09:59	12:47	
STOP TIME:	11:59	14:47	
SAMPLE TIME (Minutes):	120.0	120.0	
VOLUME SAMPLED (Cubic Feet):	73.221	83.642	78.432
VOLUME SAMPLED (Dry Std. Cubic Feet):	71.826	80.704	76.265
STACK GAS MOISTURE (Percent):	1.54	1.45	1.50
BAROMETRIC PRESURE (Inches of Hg):	30.20	30.20	30.20
STATIC PRESSURE (Inches of H2O):	-4.50	-4.50	-4.50
STACK PRESSURE (Inches of Hg):	29.87	29.87	29.87
STACK TEMPERATURE (Degrees F.):	64.2	67.8	66.0
STACK TEMPERATURE (Degrees R.):	524.2	527.8	526.0
CARBON DIOXIDE (Percent):	0.0	0.0	0.0
OXYGEN (Percent):	20.9	20.9	20.9
CARBON MONOXIDE (ppm):	0	0	0
MOLECULAR WEIGHT (Dry, Lb/Lb-Mole):	28.84	28.84	28.84
MOLECULAR WEIGHT (Wet, Lb/Lb-Mole):	28.67	28.68	28.68
AVERAGE VELOCITY HEAD (Inches of H2O):	0.949	0.850	0.900
PITOT TUBE Cp:	0.82	0.82	
VELOCITY (Feet/Second):	53.44	50.72	52.08
STACK DIAMETER (Inches):	28.0	28.0	
STACK AREA (Square Feet):	4.276	4.276	
AIRFLOW (Dry Std. Cubic Feet per Min.):	13574.1	12806.7	13190.4
AIRFLOW (Actual Cubic Feet per Min.):	13710.2	13013.1	13361.7
NOZZLE DIAMETER (Inches):	0.188	0.206	
ISOKINETICS (Percent):	98	97	98
HEX. CHROMIUM CONCENTRATION (MG/DSCM):	0.034	0.060	0.047
HEX. CHROMIUM IN SAMPLE (PPM):	0.016	0.028	0.022
HEX. CHROMIUM EMISSION RATE (mg/hr):	787.6	1297.0	1042.3
AMPHERE HOURS PER HOUR (amp-hr/hr):	5300	2889	4095
HEX. CHROMIUM EMISS. FACTOR (mg/amp-hr):	0.15	0.45	0.30

HARD CHROME TANK #3 AND #4 SCRUBBER INLET AND OUTLET

Testing was performed on May 19, 1989 at the inlet and outlet of the scrubber which controls emissions from hard chrome tanks #3 and #4. Two (2) 2-hour tests were performed at both the inlet and outlet of the scrubber which controls emissions from the tanks. The emission concentration, emission rate and emission factor are presented on pages 9 and 10 in printouts titled "Methods 1-4/Hexavalent Chromium - Summary of Results", and in Table 3 below:

Table 3. Summary of Cr^{+6} emissions tests performed May 19, 1989 at the inlet and outlet of the scrubber for chrome tanks #3 and #4 at Hytek.

#3 and #4 Hard Chrome Tanks			
SAMPLE RUN #	SCRUBBER INLET mg/amp-hr	SCRUBBER OUTLET mg/amp-hr	REMOVAL EFFICIENCY %
1	2.10	0.97	53.8
2	1.60	1.36	15.0
AVG.	1.85	1.17	34.4

Computer printouts which detail the complete results from these runs may be found on pages 27-30.

METHODS 1-4/HEXAVALENT CHROMIUM - SUMMARY OF RESULTS
AM TEST, INC. - AIR QUALITY DIVISION

FILE NAME:	HTCRSUM3
CLIENT:	HYTEK
LOCATION:	KENT, WASHINGTON
SAMPLE SITE:	SCRUBBER 3&4 INLET
OPERATORS:	GUENTHOER/WIDMEYER
CONTACT:	C. JOHNSON

	RUN #1	RUN #2	AVERAGE
LAB #:	907844	907845	
DATE:	5/19	5/19	
START TIME:	07:07	09:39	
STOP TIME:	09:07	11:39	
SAMPLE TIME (Minutes):	120.0	120.0	
VOLUME SAMPLED (Cubic Feet):	110.241	108.346	109.294
VOLUME SAMPLED (Dry Std. Cubic Feet):	113.253	109.564	111.409
STACK GAS MOISTURE (Percent):	1.12	1.17	1.15
BAROMETRIC PRESURE (Inches of Hg):	30.43	30.47	30.45
STATIC PRESSURE (Inches of H2O):	-3.20	-3.20	-3.20
STACK PRESSURE (Inches of Hg):	30.19	30.23	30.21
STACK TEMPERATURE (Degrees F.):	64.0	67.1	65.6
STACK TEMPERATURE (Degrees R.):	524.0	527.1	525.6
CARBON DIOXIDE (Percent):	0.0	0.0	0.0
OXYGEN (Percent):	20.9	20.9	20.9
CARBON MONOXIDE (ppm):	0	0	0
MOLECULAR WEIGHT (Dry, Lb/Lb-Mole):	28.84	28.84	28.84
MOLECULAR WEIGHT (Wet, Lb/Lb-Mole):	28.71	28.71	28.71
AVERAGE VELOCITY HEAD (Inches of H2O):	0.144	0.137	0.141
PITOT TUBE Cp:	0.80	0.80	
VELOCITY (Feet/Second):	20.17	19.74	19.96
STACK DIAMETER (Inches):	30.0	30.0	
STACK AREA (Square Feet):	4.909	4.909	
AIRFLOW (Dry Std. Cubic Feet per Min.):	5974.2	5817.7	5896.0
AIRFLOW (Actual Cubic Feet per Min.):	5941.8	5815.1	5878.5
NOZZLE DIAMETER (Inches):	0.375	0.375	
ISOKINETICS (Percent):	101	101	101
HEX. CHROMIUM CONCENTRATION (MG/DSCM):	0.362	0.267	0.315
HEX. CHROMIUM IN SAMPLE (PPM):	0.168	0.124	0.146
HEX. CHROMIUM EMISSION RATE (mg/hr):	3678.9	2641.2	3160.1
AMPHERE HOURS PER HOUR (amp-hr/hr):	1750	1653	1702
HEX. CHROMIUM EMISS. FACTOR (mg/amp-hr):	2.10	1.60	1.85

METHODS 1-4/HEXAVALENT CHROMIUM - SUMMARY OF RESULTS
AM TEST, INC. - AIR QUALITY DIVISION

FILE NAME:	HTCRSUM4
CLIENT:	HYTEK
LOCATION:	KENT, WASHINGTON
SAMPLE SITE:	SCRUBBER 3&4 OUTLET
OPERATORS:	GUENTHOER/WIDMEYER
CONTACT:	C. JOHNSON

	RUN #1	RUN #2	AVERAGE
LAB #:	907846	907847	
DATE:	5/19	5/19	
START TIME:	07:09	09:40	
STOP TIME:	09:09	11:40	
SAMPLE TIME (Minutes):	120.0	120.0	
VOLUME SAMPLED (Cubic Feet):	69.046	67.208	68.127
VOLUME SAMPLED (Dry Std. Cubic Feet):	68.612	65.526	67.069
STACK GAS MOISTURE (Percent):	1.28	1.26	1.27
BAROMETRIC PRESURE (Inches of Hg):	30.43	30.47	30.45
STATIC PRESSURE (Inches of H2O):	-4.90	-4.90	-4.90
STACK PRESSURE (Inches of Hg):	30.07	30.11	30.09
STACK TEMPERATURE (Degrees F.):	58.1	60.8	59.5
STACK TEMPERATURE (Degrees R.):	518.1	520.8	519.5
CARBON DIOXIDE (Percent):	0.0	0.0	0.0
OXYGEN (Percent):	20.9	20.9	20.9
CARBON MONOXIDE (ppm):	0	0	0
MOLECULAR WEIGHT (Dry, Lb/Lb-Mole):	28.84	28.84	28.84
MOLECULAR WEIGHT (Wet, Lb/Lb-Mole):	28.70	28.70	28.70
AVERAGE VELOCITY HEAD (Inches of H2O):	0.569	0.560	0.565
PITOT TUBE Cp:	0.82	0.82	
VELOCITY (Feet/Second):	40.97	40.72	40.85
STACK DIAMETER (Inches):	28.0	28.0	
STACK AREA (Square Feet):	4.276	4.276	
AIRFLOW (Dry Std. Cubic Feet per Min.):	10628.3	10525.5	10576.9
AIRFLOW (Actual Cubic Feet per Min.):	10511.4	10447.7	10479.6
NOZZLE DIAMETER (Inches):	0.206	0.206	
ISOKINETICS (Percent):	99	96	98
HEX. CHROMIUM CONCENTRATION (MG/DSCM):	0.094	0.126	0.110
HEX. CHROMIUM IN SAMPLE (PPM):	0.044	0.058	0.051
HEX. CHROMIUM EMISSION RATE (mg/hr):	1702.2	2251.8	1977.0
AMPHERE HOURS PER HOUR (amp-hr/hr):	1750	1653	1702
HEX. CHROMIUM EMISS. FACTOR (mg/amp-hr):	0.97	1.36	1.17

DISCUSSION

METHODOLOGY REFERENCES

Sampling procedures specified in the July 1, 1988 Title 40 Code of Federal Regulations, Part 60 (40 CFR 60), Appendix A, Methods 1-5 were followed throughout this project. Methodology suggested in the Environmental Protection Agency's (EPA's) Air Pollution Training Institute "Course 450 - Source Sampling for Particulate Pollutants", and EPA "Course 468 - Source Sampling and Analysis of Gaseous Pollutants", and quality assurance procedures outlined in the EPA's reference manual titled Quality Assurance Handbook for Air Pollution Measurement Systems, Volume 3, EPA-600/4-77-027b, along with current updates, were used for supplemental information with respect to quality assurance and testing protocol. Hexavalent chromium testing and analysis methods detailed in a paper titled "Method Development and Testing for Measurement of Source Levels of Hexavalent and Total Chromium" by Daniel G. Bivens and W.G. DeWees were utilized for this project.

SAMPLING PROCEDURES

The chrome anodizing tank outlet has a 36 inch diameter circular duct with one (1) sample port. One (1) velocity and temperature traverse of twelve (12) points was performed during each run. Each point was sampled for 5 minutes during runs 1 and 3 for a total sampling time of 60 minutes. During run 2 (baseline test) each point was sampled for 10 minutes for a total sampling time of 120 minutes.

The scrubber inlet duct from tanks #1 and #2 is a circular duct 36 inches in diameter, with one (1) sample port available for sampling. One (1) velocity and temperature traverse of twelve (12) points was performed during each run. Each point was sampled for 10 minutes for a total sampling time during each run of 120 minutes.

The scrubber inlet duct from tanks #1 and #2 is a circular duct 36 inches in diameter, with one (1) sample port available for sampling. One (1) velocity and temperature traverse of twelve (12) points was performed during each run. Each point was sampled for 10 minutes for a total sampling time during each run of 120 minutes.

At each site, duct condition measurements were made prior to collecting a sample. The appropriate sample nozzle was selected and isokinetic operating parameters were established utilizing a Hewlett-Packard 41CX programmable calculator. The sampling nozzle, probe and condenser section glassware were all cleaned and rinsed with deionized water and dilute nitric acid prior to assembling the sample train. The sample train was assembled and determined to be leak free following the procedures outlined in Method 5. Before each test, a final check was made to assure that the process was operating at the desired production rate and the desired

operating parameters (e.g. whether parts were in the bath). Ice was added to the condenser section to cool the impingers. The sample nozzle was positioned in the duct at the first sample point. The sample pump was then turned on and the gas sampling rate was adjusted for isokinetic sampling. Sampling proceeded isokinetically at each of the traverse points. Upon completion of each run, the sample probe was removed from the stack and a post-test leak check was performed according to Method 5 procedures. An acceptable leak check of less than 0.02 cfm at the highest vacuum rate (or greater) used during the test preceded and followed each run.

SAMPLE TRAIN

The sample train used for collecting hexavalent chromium (Cr^{+6}) samples was an EPA Method 5 design with modifications. A typical Method 5 sample train schematic is included as Figure 1 in the Appendix of this report. The Cr^{+6} sample train did not include a heated front-half filter. A quartz probe with an attached nozzle was inserted into the duct to draw a sample into the impingers. The probe was equipped with "S" type pitot tubes and a thermocouple sensor. A thermocouple indicator was used to measure the stack gas temperature at each sample point. The Fluke digital thermocouple indicator has been re-certified by the manufacturer to be accurate within ±1 degree Fahrenheit. A field check with 32 degree icewater was performed. The condenser section which, by convention, is referred to as the "back-half", consisted of a modified Greenburg-Smith bubbler containing 100 milliliters (ml) of 0.1 N sodium hydroxide (NaOH) absorbing solution, a second impinger containing 100 ml of absorbing solution, an empty bubbler, a filter holder containing a Teflon^{R} filter, and a final bubbler containing indicating silica gel desiccant. The back-half was maintained at a temperature below 68° F by adding ice to the condenser section throughout sampling.

The sample train was connected to a control box by means of an umbilical cord which contains a vacuum hose, pitot lines, thermocouple wires and a 4-wire electrical cord. The control box (meter box) was used to monitor stack conditions and to facilitate isokinetic sampling. The control box consists of a diaphragm pump which is used to pull the stack gas through the sample train, fine and coarse metering valves to control the sampling rate, a vacuum gauge which measures the pressure drop from the sampling nozzle to the metering valves, and a dry gas meter. The dry gas meters used have been recently calibrated using a spirometer at the Washington State Department of Ecology. At the outlet of the dry gas meter is

a calibrated orifice which is used to isokinetically control the flow of gas through the metering system. The pressure drop across the orifice was monitored with both low and high range magnehelic gauges. The pitot tubes utilized to measure stack gas velocity are connected to the control box via the umbilical cord. The control box contains low and high range magnehelic gauges which are used for the velocity measurement.

SAMPLE CLEAN-UP AND ANALYSIS

Following sample collection, the samples were transferred to a temporary laboratory for clean up. The back-half filters were transferred to glass petri dishes labeled with the sample date, client name and run number. These filters, along with an unused filter to be analyzed as a blank, were submitted to the Am Test laboratory for washing and analysis.

The contents of the nozzle, probe liner and connective glassware were quantitatively transferred to a glass storage container using 0.1 N NaOH. An iodine flask with a female ball joint end was attached to the male ball joint end of the probe to assure that no material collected inside the glassware was lost during the rinsing and brushing of the probe. The contents of the iodine flask were quantitatively transferred to the storage container labeled with sample date, client name, and run number. A portion of the reagent was placed in a glass storage container and submitted with the samples to the Am Test laboratory for analysis for hexavalent chromium.

The bubblers and impingers utilized for the condenser section, or "back-half" of the sample train were weighed with a readability of ± 0.1 grams before and after sampling on a Mettler PE3000 electronic top loading balance. The difference between the initial and final weights of the condenser section constitute the amount of moisture gain during the run. The percent moisture was calculated and did not exceed the theoretical psychrometric chart value. The contents of the bubblers and impingers containing absorbing solution were then transferred to the corresponding sample container for each run which already contained the probe and nozzle rinse. The bubblers and impingers were rinsed with reagent into the sample container. The samples were then transferred to the Am Test, Inc.

laboratory for hexavalent chromium (Cr^{+6}) analysis using the diphenylcarbazide colorimetric method. Prior to analysis, the volume of liquid in each sample was measured.

QUALITY ASSURANCE

A strict quality assurance program was followed throughout preparation, sampling, analysis, data reduction, and report preparation. This program includes recent equipment calibrations, careful chain-of-custody procedures, the use of ACS quality or better reagents, analysis of control samples, and "by-hand" calculation checks of computerized results.

The sample nozzle used for these tests was calibrated on-site before sampling using inside calipers readable to 0.001 inches. The dry gas meters used were calibrated on February 6, 1989 against a spirometer at the Washington State Department of Ecology (DOE) laboratory in Redmond, Washington. The "S" type pitot tubes used for velocity measurement were also calibrated on February 6, 1989 utilizing a wind tunnel and a standard "P" type pitot tube. The digital Fluke thermocouple indicator used to obtain temperature measurements was recently recertified by the manufacturer to have an accuracy of ±1 degree Fahrenheit.

In addition to quantitative clean-up and analysis procedures, filter and reagent blanks, as well as standard solutions were carried throughout the analysis procedures. Additional information with respect to the Am Test, Inc. laboratory quality assurance and quality control protocol is included in the Appendix of this report.

CALCULATION OF RESULTS

The Method 1-4 and hexavalent chromium test results were calculated using the equations found in the 40 CFR 60, Appendix A. Copies of the pertinent equations are included in the Appendix of this report. Final result calculations were obtained using Hewlett-Packard Vectra computer systems and Lotus 1-2-3 computer programs. A sample "by-hand" calculation was completed for one run using a Hewlett-Packard 11C hand calculator, and may be found in the Appendix of this report.

METHOD 1-5 - HEXAVALENT CHROMIUM EMISSIONS
AM TEST, INC. - AIR QUALITY DIVISION

FILE NAME:	HTKCRAN1	LAB #:	907735
CLIENT:	HYTEK	START TIME:	16:43 O'CLOCK
LOCATION:	KENT, WASHINGTON	STOP TIME:	17:43 O'CLOCK
SAMPLE SITE:	CHROME ANODIZING TANK	SAMPLE TIME:	60.0 MINUTES
SAMPLE DATE:	MAY 18, 1989		
RUN #:	1-CR+6		
OPERATORS:	GUENTHOER/WIDMEYER		
CONTACT:	C. JOHNSON		

HEXAVALENT CHROMIUM

HEXAVALENT CHROMIUM CONCENTRATION (UG):	184.9
HEXAVALENT CHROMIUM CONC. ON FILTER (UG):	< 0.60
HEXAVALENT CHROMIUM CONCENTRATION (MG/DSCM):	0.169
TOTAL HEXAVALENT CHROMIUM IN SAMPLE (PPM):	0.078
HEXAVALENT CHROMIUM EMISSION RATE (mg/hr):	5906.5
AMPHERE HOURS PER HOUR (amp-hr/hr):	356
HEX. CHROMIUM EMISSION FACTOR (mg/amp-hr):	16.59

FINAL WT. OF H2O G.	INIT.WT. OF H2O G	NET WT. OF H2O G.
638.8	637.3	1.5
596.0	594.7	1.3
527.3	526.8	0.5
810.3	804.1	6.2
TOTAL H2O GAIN:		9.5
TOTAL VOLUME (SCF)		0.45
PERCENT MOISTURE:		1.15
Bws:		0.0115

PITOT Cp:	0.80
NOZZLE DIA INCHES:	0.206
NOZZLE AREA FT^2:	0.0002
STACK DIA. INCHES:	36.00
STACK AREA FT^2:	7.069
METER TEMP. DEG F:	74.9
BAROM. PRES. "HG:	30.16
STATIC PRES. "H2O:	-6.80
STACK PRES. "HG:	29.66
ORIFICE PRES "H2O:	1.476
METER PRES. "HG:	30.27

INIT. METER VOL.:	148.497
FINAL METER VOL.:	187.920
VOLUME SAMPLED:	39.423
STD VOLUME (DSCF):	38.580
STD VOLUME (DSCM):	1.093
Y FACTOR:	0.98

AVERAGE % CO2:	0.0
AVERAGE % O2:	20.9
AVERAGE % CO:	0
STACK GAS MW. DRY:	28.84
STACK GAS MW. WET:	28.71

SAMPLE POINT	VELOCITY " OF H2O	TEMPERATURE DEGREES F.	SAMPLE POINT	VELOCITY " OF H2O	TEMPERATURE DEGREES F.
1	1.00	72	7	0.70	72
2	1.00	72	8	0.62	71
3	1.00	73	9	0.62	71
4	1.05	73	10	0.70	71
5	1.00	73	11	0.80	73
6	1.00	72	12	0.80	72

PERCENT ISOKINETICS:	96 %	
STACK TEMPERATURE:	72.1 DEG. F.	532.1 DEG. R.
AVERAGE VELOCITY HEAD:	0.850 " OF H2O	
STACK GAS VELOCITY:		49.83 FT/SEC.
STACK GAS AIR FLOW:	21135.0 ACF/MIN.	20552.1 DSCF/MIN.

METHOD 1-5 - HEXAVALENT CHROMIUM EMISSIONS
AM TEST, INC. - AIR QUALITY DIVISION

FILE NAME:	HTKCRAN2	LAB #:	907736
CLIENT:	HYTEK	START TIME:	17:55 O'CLOCK
LOCATION:	KENT, WASHINGTON	STOP TIME:	19:55 O'CLOCK
SAMPLE SITE:	CHROME ANODIZING TANK	SAMPLE TIME:	120.0 MINUTES
SAMPLE DATE:	MAY 18, 1989		
RUN #:	2-CR+6		
OPERATORS:	GUENTHOER/WIDMEYER		
CONTACT:	C. JOHNSON		

HEXAVALENT CHROMIUM

HEXAVALENT CHROMIUM CONCENTRATION (UG):	12.37
HEXAVALENT CHROMIUM CONC. ON FILTER (UG):	< 0.60
HEXAVALENT CHROMIUM CONCENTRATION (MG/DSCM):	0.006
TOTAL HEXAVALENT CHROMIUM IN SAMPLE (PPM):	0.003
HEXAVALENT CHROMIUM EMISSION RATE (mg/hr):	197.8
AMPHERE HOURS PER HOUR (amp-hr/hr):	0
HEX. CHROMIUM EMISSION FACTOR (mg/amp-hr):	NA

FINAL WT. OF H2O G.	INIT.WT. OF H2O G	NET WT. OF H2O G.
641.0	638.6	2.4
586.1	644.8	-58.7
592.7	533.0	59.7
808.5	794.7	13.8
TOTAL H2O GAIN:		17.2
TOTAL VOLUME (SCF)		0.81
PERCENT MOISTURE:		1.04
Bws:		0.0104

PITOT Cp:	0.80
NOZZLE DIA INCHES:	0.206
NOZZLE AREA FT^2:	0.0002
STACK DIA. INCHES:	36.00
STACK AREA FT^2:	7.069
METER TEMP. DEG F:	80.6
BAROM. PRES. "HG:	30.16
STATIC PRES. "H2O:	-6.80
STACK PRES. "HG:	29.66
ORIFICE PRES "H2O:	1.494
METER PRES. "HG:	30.27

INIT. METER VOL.:	188.102
FINAL METER VOL.:	268.061
VOLUME SAMPLED:	79.959
STD VOLUME (DSCF):	77.428
STD VOLUME (DSCM):	2.193
Y FACTOR:	0.98

AVERAGE % CO2:	0.0
AVERAGE % O2:	20.9
AVERAGE % CO:	0
STACK GAS MW. DRY:	28.84
STACK GAS MW. WET:	28.72

SAMPLE POINT	VELOCITY " OF H2O	TEMPERATURE DEGREES F.	SAMPLE POINT	VELOCITY " OF H2O	TEMPERATURE DEGREES F.
1	1.00	71	7	0.70	71
2	1.00	71	8	0.64	70
3	1.00	71	9	0.64	71
4	1.05	72	10	0.71	71
5	1.00	72	11	0.80	70
6	1.00	72	12	0.80	70

PERCENT ISOKINETICS:	95 %	
STACK TEMPERATURE:	71.0 DEG. F.	531.0 DEG. R.
AVERAGE VELOCITY HEAD:	0.855 " OF H2O	
STACK GAS VELOCITY:		49.91 FT/SEC.
STACK GAS AIR FLOW:	21168.6 ACF/MIN.	20649.8 DSCF/MIN.

METHOD 1-5 - HEXAVALENT CHROMIUM EMISSIONS
AM TEST, INC. - AIR QUALITY DIVISION

FILE NAME:	HTKCRAN3	LAB #:	907737
CLIENT:	HYTEK	START TIME:	20:38 O'CLOCK
LOCATION:	KENT, WASHINGTON	STOP TIME:	21:38 O'CLOCK
SAMPLE SITE:	CHROME ANODIZING TANK	SAMPLE TIME:	60.0 MINUTES
SAMPLE DATE:	MAY 18, 1989		
RUN #:	3-CR+6		
OPERATORS:	GUENTHOER/WIDMEYER		
CONTACT:	C. JOHNSON		

FINAL WT. OF H2O G.	INIT.WT. OF H2O G	NET WT. OF H2O G.
604.5	601.1	3.4
576.0	575.6	0.4
533.9	533.7	0.2
781.1	774.6	6.5
TOTAL H2O GAIN:		10.5
TOTAL VOLUME (SCF)		0.49
PERCENT MOISTURE:		1.24
Bws:		0.0124

PITOT Cp:	0.80
NOZZLE DIA INCHES:	0.206
NOZZLE AREA FT^2:	0.0002
STACK DIA. INCHES:	36.00
STACK AREA FT^2:	7.069
METER TEMP. DEG F:	71.8
BAROM. PRES. "HG:	30.12
STATIC PRES. "H2O:	-6.80
STACK PRES. "HG:	29.62
ORIFICE PRES "H2O:	1.504
METER PRES. "HG:	30.23

INIT. METER VOL.:	268.300
FINAL METER VOL.:	308.230
VOLUME SAMPLED:	39.930
STD VOLUME (DSCF):	39.255
STD VOLUME (DSCM):	1.112
Y FACTOR:	0.98

AVERAGE % CO2:	0.0
AVERAGE % O2:	20.9
AVERAGE % CO:	0
STACK GAS MW. DRY:	28.84
STACK GAS MW. WET:	28.70

SAMPLE POINT	VELOCITY " OF H2O	TEMPERATURE DEGREES F.	SAMPLE POINT	VELOCITY " OF H2O	TEMPERATURE DEGREES F.
1	1.00	69	7	0.74	69
2	1.00	69	8	0.67	68
3	1.00	69	9	0.67	68
4	1.05	68	10	0.72	68
5	1.00	68	11	0.80	69
6	1.00	68	12	0.80	68

PERCENT ISOKINETICS:	96 %	
STACK TEMPERATURE:	68.4 DEG. F.	528.4 DEG. R.
AVERAGE VELOCITY HEAD:	0.865 " OF H2O	
STACK GAS VELOCITY:		50.14 FT/SEC.
STACK GAS AIR FLOW:	21266.4 ACF/MIN.	20774.7 DSCF/MIN.

HEXAVALENT CHROMIUM

HEXAVALENT CHROMIUM CONCENTRATION (UG):	83.0
HEXAVALENT CHROMIUM CONC. ON FILTER (UG):	< 0.60
HEXAVALENT CHROMIUM CONCENTRATION (MG/DSCM):	0.075
TOTAL HEXAVALENT CHROMIUM IN SAMPLE (PPM):	0.035
HEXAVALENT CHROMIUM EMISSION RATE (mg/hr):	2634.0
AMPHERE HOURS PER HOUR (amp-hr/hr):	356
HEX. CHROMIUM EMISSION FACTOR (mg/amp-hr):	7.40

METHOD 1-5 - HEXAVALENT CHROMIUM EMISSIONS
AM TEST, INC. - AIR QUALITY DIVISION

FILE NAME:	1NTK1&2I	LAB #:	907731
CLIENT:	HYTEK	START TIME:	09:57 O'CLOCK
LOCATION:	KENT, WASHINGTON	STOP TIME:	11:57 O'CLOCK
SAMPLE SITE:	SCRUBBER 1&2 INLET	SAMPLE TIME:	120.0 MINUTES
SAMPLE DATE:	MAY 18, 1989		
RUN #:	1-CR+6		
OPERATORS:	GUENTHOER/WIDMEYER		
CONTACT:	C. JOHNSON		

HEXAVALENT CHROMIUM

HEXAVALENT CHROMIUM CONCENTRATION (UG):	25648.0
HEXAVALENT CHROMIUM CONC. ON FILTER (UG):	< 0.60
HEXAVALENT CHROMIUM CONCENTRATION (MG/DSCM):	8.527
TOTAL HEXAVALENT CHROMIUM IN SAMPLE (PPM):	3.945
HEXAVALENT CHROMIUM EMISSION RATE (mg/hr):	115757.0
AMPHERE HOURS PER HOUR (amp-hr/hr):	5300
HEX. CHROMIUM EMISSION FACTOR (mg/amp-hr):	21.84

FINAL WT. OF H2O G.	INIT.WT. OF H2O G	NET WT. OF H2O G.
594.5	577.4	17.1
618.9	622.1	-3.2
519.2	518.2	1.0
785.9	767.9	18.0
TOTAL H2O GAIN:		32.9
TOTAL VOLUME (SCF)		1.55
PERCENT MOISTURE:		1.44
Bws:		0.0144

PITOT Cp:	0.80
NOZZLE DIA INCHES:	0.375
NOZZLE AREA FT^2:	0.0008
STACK DIA. INCHES:	36.00
STACK AREA FT^2:	7.069
METER TEMP. DEG F:	60.1
BAROM. PRES. "HG:	30.20
STATIC PRES. "H2O:	-2.90
STACK PRES. "HG:	29.99
ORIFICE PRES "H2O:	1.231
METER PRES. "HG:	30.29

INIT. METER VOL.:	135.161
FINAL METER VOL.:	239.197
VOLUME SAMPLED:	104.036
STD VOLUME (DSCF):	106.175
STD VOLUME (DSCM):	3.008
Y FACTOR:	0.993

AVERAGE % CO2:	0.0
AVERAGE % O2:	20.9
AVERAGE % CO:	0
STACK GAS MW. DRY:	28.84
STACK GAS MW. WET:	28.68

SAMPLE POINT	VELOCITY " OF H2O	TEMPERATURE DEGREES F.	SAMPLE POINT	VELOCITY " OF H2O	TEMPERATURE DEGREES F.
1	0.19	65	7	0.120	68
2	0.17	65	8	0.130	68
3	0.08	65	9	0.135	68
4	0.08	65	10	0.135	69
5	0.11	66	11	0.140	69
6	0.11	67	12	0.140	69

PERCENT ISOKINETICS:	102 %	
STACK TEMPERATURE:	67.0 DEG. F.	527.0 DEG. R.
AVERAGE VELOCITY HEAD:	0.126 " OF H2O	
STACK GAS VELOCITY:		19.04 FT/SEC.
STACK GAS AIR FLOW:	8074.5 ACF/MIN.	7991.2 DSCF/MIN.

METHOD 1-5 - HEXAVALENT CHROMIUM EMISSIONS
AM TEST, INC. - AIR QUALITY DIVISION

FILE NAME:	2HTK1&2I	LAB #:	907732
CLIENT:	HYTEK	START TIME:	12:45 O'CLOCK
LOCATION:	KENT, WASHINGTON	STOP TIME:	14:45 O'CLOCK
SAMPLE SITE:	SCRUBBER 1&2 INLET	SAMPLE TIME:	120.0 MINUTES
SAMPLE DATE:	MAY 18, 1989		
RUN #:	2-CR+6		
OPERATORS:	GUENTHOER/WIDMEYER		
CONTACT:	C. JOHNSON		

HEXAVALENT CHROMIUM

HEXAVALENT CHROMIUM CONCENTRATION (UG):	3431.0
HEXAVALENT CHROMIUM CONC. ON FILTER (UG):	0.65
HEXAVALENT CHROMIUM CONCENTRATION (MG/DSCM):	1.133
TOTAL HEXAVALENT CHROMIUM IN SAMPLE (PPM):	0.524
HEXAVALENT CHROMIUM EMISSION RATE (mg/hr):	15321.4
AMPHERE HOURS PER HOUR (amp-hr/hr):	2889
HEX. CHROMIUM EMISSION FACTOR (mg/amp-hr):	5.30

FINAL WT. OF H2O G.	INIT.WT. OF H2O G	NET WT. OF H2O G.
646.0	638.9	7.1
634.8	631.9	2.9
542.3	540.8	1.5
805.6	783.8	21.8
TOTAL H2O GAIN:		33.3
TOTAL VOLUME (SCF)		1.57
PERCENT MOISTURE:		1.45
Bws:		0.0145

PITOT Cp:	0.80
NOZZLE DIA INCHES:	0.375
NOZZLE AREA FT^2:	0.0008
STACK DIA. INCHES:	36.00
STACK AREA FT^2:	7.069
METER TEMP. DEG F:	70.9
BAROM. PRES. "HG:	30.20
STATIC PRES. "H2O:	-2.90
STACK PRES. "HG:	29.99
ORIFICE PRES "H2O:	1.252
METER PRES. "HG:	30.29

INIT. METER VOL.:	239.847
FINAL METER VOL.:	346.762
VOLUME SAMPLED:	106.915
STD VOLUME (DSCF):	106.899
STD VOLUME (DSCM):	3.028
Y FACTOR:	0.993

AVERAGE % CO2:	0.0
AVERAGE % O2:	20.9
AVERAGE % CO:	0
STACK GAS MW. DRY:	28.84
STACK GAS MW. WET:	28.68

SAMPLE POINT	VELOCITY " OF H2O	TEMPERATURE DEGREES F.	SAMPLE POINT	VELOCITY " OF H2O	TEMPERATURE DEGREES F.
1	0.18	70	7	0.12	72
2	0.15	71	8	0.12	73
3	0.10	71	9	0.13	72
4	0.10	72	10	0.13	72
5	0.11	72	11	0.14	72
6	0.11	72	12	0.14	72

PERCENT ISOKINETICS:	103 %	
STACK TEMPERATURE:	71.8 DEG. F.	531.8 DEG. R.
AVERAGE VELOCITY HEAD:	0.127 " OF H2O	
STACK GAS VELOCITY:		19.13 FT/SEC.
STACK GAS AIR FLOW:	8115.2 ACF/MIN.	7959.1 DSCF/MIN.

METHOD 1-5 - HEXAVALENT CHROMIUM EMISSIONS
AM TEST, INC. - AIR QUALITY DIVISION

FILE NAME:	1HTK1&2O	LAB #:	907733
CLIENT:	HYTEK	START TIME:	09:59 O'CLOCK
LOCATION:	KENT, WASHINGTON	STOP TIME:	11:59 O'CLOCK
SAMPLE SITE:	SCRUBBER 1&2 OUTLET	SAMPLE TIME:	120.0 MINUTES
SAMPLE DATE:	MAY 18, 1989		
RUN #:	1-CR+6		
OPERATORS:	GUENTHOER/WIDMEYER		
CONTACT:	C. JOHNSON		

FINAL WT. OF H2O G.	INIT.WT. OF H2O G	NET WT. OF H2O G.
640.2	635.7	4.5
595.9	591.0	4.9
527.6	525.6	2.0
804.1	791.6	12.5
TOTAL H2O GAIN:		23.9
TOTAL VOLUME (SCF)		1.13
PERCENT MOISTURE:		1.54
Bws:		0.0154

PITOT Cp:	0.82
NOZZLE DIA INCHES:	0.188
NOZZLE AREA FT^2:	0.0002
STACK DIA. INCHES:	28.00
STACK AREA FT^2:	4.276
METER TEMP. DEG F:	74.0
BAROM. PRES. "HG:	30.20
STATIC PRES. "H2O:	-4.50
STACK PRES. "HG:	29.87
ORIFICE PRES "H2O:	1.215
METER PRES. "HG:	30.29

INIT. METER VOL.:	991.357
FINAL METER VOL.:	1064.578
VOLUME SAMPLED:	73.221
STD VOLUME (DSCF):	71.826
STD VOLUME (DSCM):	2.035
Y FACTOR:	0.98

AVERAGE % CO2:	0.0
AVERAGE % O2:	20.9
AVERAGE % CO:	0
STACK GAS MW. DRY:	28.84
STACK GAS MW. WET:	28.67

SAMPLE POINT	VELOCITY " OF H2O	TEMPERATURE DEGREES F.	SAMPLE POINT	VELOCITY " OF H2O	TEMPERATURE DEGREES F.
1	0.65	63	7	1.05	63
2	0.65	65	8	0.90	62
3	0.65	66	9	0.90	63
4	0.75	66	10	1.35	64
5	0.95	66	11	1.35	63
6	1.05	65	12	1.35	64

PERCENT ISOKINETICS:	98 %	
STACK TEMPERATURE:	64.2 DEG. F.	524.2 DEG. R.
AVERAGE VELOCITY HEAD:	0.949 " OF H2O	
STACK GAS VELOCITY:		53.44 FT/SEC.
STACK GAS AIR FLOW:	13710.2 ACF/MIN.	13574.1 DSCF/MIN.

HEXAVALENT CHROMIUM

HEXAVALENT CHROMIUM CONCENTRATION (UG):	69.5
HEXAVALENT CHROMIUM CONC. ON FILTER (UG):	< 0.60
HEXAVALENT CHROMIUM CONCENTRATION (NG/DSCM):	0.034
TOTAL HEXAVALENT CHROMIUM IN SAMPLE (PPM):	0.016
HEXAVALENT CHROMIUM EMISSION RATE (mg/hr):	787.6
AMPHERE HOURS PER HOUR (amp-hr/hr):	5300
HEX. CHROMIUM EMISSION FACTOR (mg/amp-hr):	0.15

METHOD 1-5 - HEXAVALENT CHROMIUM EMISSIONS
AM TEST, INC. - AIR QUALITY DIVISION

FILE NAME:	2HTK1&2D
CLIENT:	HYTEK
LOCATION:	KENT, WASHINGTON
SAMPLE SITE:	SCRUBBER 1&2 OUTLET
SAMPLE DATE:	MAY 18, 1989
RUN #:	2-CR+6
OPERATORS:	GUENTHOER/WIDMEYER
CONTACT:	C. JOHNSON

LAB #:	907734
START TIME:	12:47 O'CLOCK
STOP TIME:	14:47 O'CLOCK
SAMPLE TIME:	120.0 MINUTES

HEXAVALENT CHROMIUM

HEXAVALENT CHROMIUM CONCENTRATION (UG):	135.1
HEXAVALENT CHROMIUM CONC. ON FILTER (UG):	1.2
HEXAVALENT CHROMIUM CONCENTRATION (NG/DSCM):	0.060
TOTAL HEXAVALENT CHROMIUM IN SAMPLE (PPM):	0.028
HEXAVALENT CHROMIUM EMISSION RATE (mg/hr):	1297.0
AMPHERE HOURS PER HOUR (amp-hr/hr):	2889
HEX. CHROMIUM EMISSION FACTOR (mg/amp-hr):	0.45

FINAL WT. OF H2O G.	INIT.WT. OF H2O G	NET WT. OF H2O G.
607.5	602.5	5.0
581.0	577.0	4.0
535.8	533.9	1.9
774.6	760.3	14.3
TOTAL H2O GAIN:		25.2
TOTAL VOLUME (SCF)		1.19
PERCENT MOISTURE:		1.45
Bws:		0.0145

PITOT Cp:	0.82
NOZZLE DIA INCHES:	0.206
NOZZLE AREA FT^2:	0.0002
STACK DIA. INCHES:	28.00
STACK AREA FT^2:	4.276
METER TEMP. DEG F:	83.4
BAROM. PRES. "HG:	30.20
STATIC PRES. "H2O:	-4.50
STACK PRES. "HG:	29.87
ORIFICE PRES "H2O:	1.597
METER PRES. "HG:	30.32

INIT. METER VOL.:	64.785
FINAL METER VOL.:	148.427
VOLUME SAMPLED:	83.642
STD VOLUME (DSCF):	80.704
STD VOLUME (DSCM):	2.286
Y FACTOR:	0.98

AVERAGE % CO2:	0.0
AVERAGE % O2:	20.9
AVERAGE % CO:	0
STACK GAS MW. DRY:	28.84
STACK GAS MW. WET:	28.68

SAMPLE POINT	VELOCITY " OF H2O	TEMPERATURE DEGREES F.	SAMPLE POINT	VELOCITY " OF H2O	TEMPERATURE DEGREES F.
1	0.55	71	7	1.00	67
2	0.55	71	8	1.00	66
3	0.55	70	9	1.10	67
4	0.60	70	10	1.10	66
5	0.75	68	11	1.10	65
6	1.00	67	12	1.10	66

PERCENT ISOKINETICS:	97 %	
STACK TEMPERATURE:	67.8 DEG. F.	527.8 DEG. R.
AVERAGE VELOCITY HEAD:	0.850 " OF H2O	
STACK GAS VELOCITY:		50.72 FT/SEC.
STACK GAS AIR FLOW:	13013.1 ACF/MIN.	12806.7 DSCF/MIN.

METHOD 1-5 - HEXAVALENT CHROMIUM EMISSIONS
AM TEST, INC. - AIR QUALITY DIVISION

FILE NAME:	1HTK3841	LAB #:	907844
CLIENT:	HYTEK	START TIME:	07:07 O'CLOCK
LOCATION:	KENT, WASHINGTON	STOP TIME:	09:07 O'CLOCK
SAMPLE SITE:	SCRUBBER 3&4 INLET	SAMPLE TIME:	120.0 MINUTES
SAMPLE DATE:	MAY 19, 1989		
RUN #:	1-CR+6		
OPERATORS:	GUENTHOER/WIDMEYER		
CONTACT:	C. JOHNSON		

FINAL WT. OF H2O G.	INIT.WT. OF H2O G	NET WT. OF H2O G.
580.6	574.7	5.9
623.4	622.0	1.4
519.0	518.6	0.4
800.1	780.5	19.6
TOTAL H2O GAIN:		27.3
TOTAL VOLUME (SCF)		1.29
PERCENT MOISTURE:		1.12
Bws:		0.0112

PITOT Cp:	0.80
NOZZLE DIA INCHES:	0.375
NOZZLE AREA FT^2:	0.0008
STACK DIA. INCHES:	30.00
STACK AREA FT^2:	4.909
METER TEMP. DEG F:	60.8
BAROM. PRES. "HG:	30.43
STATIC PRES. "H2O:	-3.20
STACK PRES. "HG:	30.19
ORIFICE PRES "H2O:	1.390
METER PRES. "HG:	30.53

INIT. METER VOL.:	347.820
FINAL METER VOL.:	458.061
VOLUME SAMPLED:	110.241
STD VOLUME (DSCF):	113.253
STD VOLUME (DSCM):	3.208
Y FACTOR:	0.993

AVERAGE % CO2:	0.0
AVERAGE % O2:	20.9
AVERAGE % CO:	0
STACK GAS MW. DRY:	28.84
STACK GAS MW. WET:	28.71

SAMPLE POINT	VELOCITY " OF H2O	TEMPERATURE DEGREES F.	SAMPLE POINT	VELOCITY " OF H2O	TEMPERATURE DEGREES F.
1	0.15	62	7	0.14	65
2	0.15	62	8	0.15	65
3	0.13	61	9	0.15	65
4	0.12	63	10	0.15	65
5	0.16	65	11	0.14	65
6	0.15	65	12	0.14	65

PERCENT ISOKINETICS:	101 %	
STACK TEMPERATURE:	64.0 DEG. F.	524.0 DEG. R.
AVERAGE VELOCITY HEAD:	0.144 " OF H2O	
STACK GAS VELOCITY:		20.17 FT/SEC.
STACK GAS AIR FLOW:	5941.8 ACF/MIN.	5974.2 DSCF/MIN.

HEXAVALENT CHROMIUM

HEXAVALENT CHROMIUM CONCENTRATION (UG):	1163
HEXAVALENT CHROMIUM CONC. ON FILTER (UG):	< 0.60
HEXAVALENT CHROMIUM CONCENTRATION (MG/DSCM):	0.362
TOTAL HEXAVALENT CHROMIUM IN SAMPLE (PPM):	0.168
HEXAVALENT CHROMIUM EMISSION RATE (mg/hr):	3678.9
AMPHERE HOURS PER HOUR (amp-hr/hr):	1750
HEX. CHROMIUM EMISSION FACTOR (mg/amp-hr):	2.10

METHOD 1-5 - HEXAVALENT CHROMIUM EMISSIONS
AM TEST, INC. - AIR QUALITY DIVISION

FILE NAME:	2HTK3841
CLIENT:	HYTEK
LOCATION:	KENT, WASHINGTON
SAMPLE SITE:	SCRUBBER 3&4 INLET
SAMPLE DATE:	MAY 19, 1989
RUN #:	2-CR+6
OPERATORS:	GUENTHOER/WIDMEYER
CONTACT:	C. JOHNSON

LAB #:	907845
START TIME:	09:39 O'CLOCK
STOP TIME:	11:39 O'CLOCK
SAMPLE TIME:	120.0 MINUTES

HEXAVALENT CHROMIUM

HEXAVALENT CHROMIUM CONCENTRATION (UG):	829.5
HEXAVALENT CHROMIUM CONC. ON FILTER (UG):	< 0.60
HEXAVALENT CHROMIUM CONCENTRATION (MG/DSCM):	0.267
TOTAL HEXAVALENT CHROMIUM IN SAMPLE (PPM):	0.124
HEXAVALENT CHROMIUM EMISSION RATE (mg/hr):	2641.2
AMPHERE HOURS PER HOUR (amp-hr/hr):	1653
HEX. CHROMIUM EMISSION FACTOR (mg/amp-hr):	1.60

FINAL WT. OF H2O G.	INIT.WT. OF H2O G	NET WT. OF H2O G.
645.5	638.0	7.5
597.5	596.5	1.0
526.8	526.2	0.6
828.7	810.3	18.4
TOTAL H2O GAIN:		27.5
TOTAL VOLUME (SCF)		1.30
PERCENT MOISTURE:		1.17
Bws:		0.0117

PITOT Cp:	0.80
NOZZLE DIA INCHES:	0.375
NOZZLE AREA FT^2:	0.0008
STACK DIA. INCHES:	30.00
STACK AREA FT^2:	4.909
METER TEMP. DEG F:	69.7
BAROM. PRES. "HG:	30.47
STATIC PRES. "H2O:	-3.20
STACK PRES. "HG:	30.23
ORIFICE PRES "H2O:	1.331
METER PRES. "HG:	30.57

INIT. METER VOL.:	458.325
FINAL METER VOL.:	566.671
VOLUME SAMPLED:	108.346
STD VOLUME (DSCF):	109.564
STD VOLUME (DSCM):	3.104
Y FACTOR:	0.993

AVERAGE % CO2:	0.0
AVERAGE % O2:	20.9
AVERAGE % CO:	0
STACK GAS MW. DRY:	28.84
STACK GAS MW. WET:	28.71

SAMPLE POINT	VELOCITY " OF H2O	TEMPERATURE DEGREES F.	SAMPLE POINT	VELOCITY " OF H2O	TEMPERATURE DEGREES F.
1	0.15	65	7	0.14	68
2	0.15	65	8	0.13	68
3	0.13	66	9	0.13	68
4	0.13	66	10	0.15	68
5	0.12	66	11	0.15	69
6	0.12	67	12	0.15	69

PERCENT ISOKINETICS:	101 %	
STACK TEMPERATURE:	67.1 DEG. F.	527.1 DEG. R.
AVERAGE VELOCITY HEAD:	0.137 " OF H2O	
STACK GAS VELOCITY:		19.74 FT/SEC.
STACK GAS AIR FLOW:	5815.1 ACF/MIN.	5817.7 DSCF/MIN.

METHOD 1-5 - HEXAVALENT CHROMIUM EMISSIONS
AM TEST, INC. - AIR QUALITY DIVISION

FILE NAME:	1MTK3840
CLIENT:	HYTEK
LOCATION:	KENT, WASHINGTON
SAMPLE SITE:	SCRUBBER 3&4 OUTLET
SAMPLE DATE:	MAY 19, 1989
RUN #:	1-CR+6
OPERATORS:	GUENTHOER/WIDMEYER
CONTACT:	C. JOHNSON

LAB #:	907846
START TIME:	07:09 O'CLOCK
STOP TIME:	09:09 O'CLOCK
SAMPLE TIME:	120.0 MINUTES

HEXAVALENT CHROMIUM

HEXAVALENT CHROMIUM CONCENTRATION (UG):	182.1
HEXAVALENT CHROMIUM CONC. ON FILTER (UG):	1.15
HEXAVALENT CHROMIUM CONCENTRATION (MG/DSCM):	0.094
TOTAL HEXAVALENT CHROMIUM IN SAMPLE (PPM):	0.044
HEXAVALENT CHROMIUM EMISSION RATE (mg/hr):	1702.2
AMPHERE HOURS PER HOUR (amp-hr/hr):	1750
HEX. CHROMIUM EMISSION FACTOR (mg/amp-hr):	0.97

FINAL WT. OF H2O G.	INIT.WT. OF H2O G	NET WT. OF H2O G.
607.0	601.5	5.5
579.6	576.9	2.7
535.5	535.5	0.0
788.2	777.5	10.7
TOTAL H2O GAIN:		18.9
TOTAL VOLUME (SCF)		0.89
PERCENT MOISTURE:		1.28
Bws:		0.0128

PITOT Cp:	0.82
NOZZLE DIA INCHES:	0.206
NOZZLE AREA FT^2:	0.0002
STACK DIA. INCHES:	28.00
STACK AREA FT^2:	4.276
METER TEMP. DEG F:	70.9
BAROM. PRES. "HG:	30.43
STATIC PRES. "H2O:	-4.90
STACK PRES. "HG:	30.07
ORIFICE PRES "H2O:	1.023
METER PRES. "HG:	30.51

INIT. METER VOL.:	309.312
FINAL METER VOL.:	378.358
VOLUME SAMPLED:	69.046
STD VOLUME (DSCF):	68.612
STD VOLUME (DSCM):	1.944
Y FACTOR:	0.98

AVERAGE % CO2:	0.0
AVERAGE % O2:	20.9
AVERAGE % CO:	0
STACK GAS MW. DRY:	28.84
STACK GAS MW. WET:	28.70

SAMPLE POINT	VELOCITY " OF H2O	TEMPERATURE DEGREES F.	SAMPLE POINT	VELOCITY " OF H2O	TEMPERATURE DEGREES F.
1	0.50	63	7	0.80	58
2	0.55	62	8	0.60	56
3	0.55	61	9	0.60	54
4	0.55	61	10	0.60	54
5	0.55	60	11	0.40	55
6	0.80	59	12	0.40	54

PERCENT ISOKINETICS:	99 %	
STACK TEMPERATURE:	58.1 DEG. F.	518.1 DEG. R.
AVERAGE VELOCITY HEAD:	0.569 " OF H2O	
STACK GAS VELOCITY:		40.97 FT/SEC.
STACK GAS AIR FLOW:	10511.4 ACF/MIN.	10628.3 DSCF/MIN.

METHOD 1-5 - HEXAVALENT CHROMIUM EMISSIONS
AM TEST, INC. - AIR QUALITY DIVISION

FILE NAME:	2HTK3&4O	LAB #:	907847
CLIENT:	HYTEK	START TIME:	09:40 O'CLOCK
LOCATION:	KENT, WASHINGTON	STOP TIME:	11:40 O'CLOCK
SAMPLE SITE:	SCRUBBER 3&4 OUTLET	SAMPLE TIME:	120.0 MINUTES
SAMPLE DATE:	MAY 19, 1989		
RUN #:	2-CR+6		
OPERATORS:	GUENTHOER/WIDMEYER		
CONTACT:	C. JOHNSON		

HEXAVALENT CHROMIUM

HEXAVALENT CHROMIUM CONCENTRATION (UG):	233.0
HEXAVALENT CHROMIUM CONC. ON FILTER (UG):	0.775
HEXAVALENT CHROMIUM CONCENTRATION (MG/DSCM):	0.126
TOTAL HEXAVALENT CHROMIUM IN SAMPLE (PPM):	0.058
HEXAVALENT CHROMIUM EMISSION RATE (mg/hr):	2251.8
AMPHERE HOURS PER HOUR (amp-hr/hr):	1653
HEX. CHROMIUM EMISSION FACTOR (mg/amp-hr):	1.36

FINAL WT. OF H2O G.	INIT.WT. OF H2O G	NET WT. OF H2O G.
641.9	638.8	3.1
634.1	632.3	1.8
546.5	545.3	1.2
820.1	808.4	11.7
TOTAL H2O GAIN:		17.8
TOTAL VOLUME (SCF)		0.84
PERCENT MOISTURE:		1.26
Bws:		0.0126

PITOT Cp:	0.82
NOZZLE DIA INCHES:	0.206
NOZZLE AREA FT^2:	0.0002
STACK DIA. INCHES:	28.00
STACK AREA FT^2:	4.276
METER TEMP. DEG F:	81.8
BAROM. PRES. "HG:	30.47
STATIC PRES. "H2O:	-4.90
STACK PRES. "HG:	30.11
ORIFICE PRES "H2O:	1.016
METER PRES. "HG:	30.54

INIT. METER VOL.:	378.629
FINAL METER VOL.:	445.837
VOLUME SAMPLED:	67.208
STD VOLUME (DSCF):	65.526
STD VOLUME (DSCM):	1.856
Y FACTOR:	0.98

AVERAGE % CO2:	0.0
AVERAGE % O2:	20.9
AVERAGE % CO:	0
STACK GAS MW. DRY:	28.84
STACK GAS MW. WET:	28.70

SAMPLE POINT	VELOCITY " OF H2O	TEMPERATURE DEGREES F.	SAMPLE POINT	VELOCITY " OF H2O	TEMPERATURE DEGREES F.
1	0.60	62	7	0.80	59
2	0.60	61	8	0.80	61
3	0.65	61	9	0.40	60
4	0.65	60	10	0.40	61
5	0.65	60	11	0.35	62
6	0.60	60	12	0.35	62

PERCENT ISOKINETICS:	96 %	
STACK TEMPERATURE:	60.8 DEG. F.	520.8 DEG. R.
AVERAGE VELOCITY HEAD:	0.560 " OF H2O	
STACK GAS VELOCITY:		40.72 FT/SEC.
STACK GAS AIR FLOW:	10447.7 ACF/MIN.	10525.5 DSCF/MIN.

APPENDIX

Hard Chrome Tanks

Chrome Anodizing Tank

	Times	Amp-hr / hour
1	16:43-17:43	356 amp hr/hr
2	17:55-19:55	Ø
3	20:38-21:38	356 amp hr/hr

Load: 65 Racks 2"x65" x 3/16" thick
22 Volts

Scrubber #1 #2

Times	Am-hr / hr
09:57-11:57	5300 amp hr/hr
12:45-14:45	2889 amp hr/hr

Scrubber #3 #4

Times	Amp-hr / hour
07:07-09:07	1750 amp hr/hr
09:39-11:39	1653 amp hr/hr

1st load	in 5:45 Smoke pump volts 22 Amps 500	out 5:30 volts 22 Amps 450
2nd load	IN 5:40 Smoke pump 22 volts 500 Amps	OUT 5:25 22 volts 450 Amps.
Same load 6-5 racks 2"x65" 3/16 thick		

AmTest FAX # 333-6502

5/18

# 1	# 2	
0900 hrs.	0900 hrs.	Overall Amps. –
Not Running.	1800 Amps.	2.5 Amps. Per Sq. In.
1000 hrs.	930 hrs.	
2000 Amps.	Not Running	
Ran for hrs.	1000 hrs.	
	3300 Amps.	
	1400 hrs.	
	2200 Amp.	

#3
Not Running
0900

#4 Not Running
0900
1045 hrs 150 Amps
1100 Not Running
1300 300 Amps.
1315 Not Running
1330 300 Amps
1345 Not Running

5/19

#3	#4.
0655 hrs.	0655 hrs.
1500 Amps	250 Amp
	0930 hrs
	475 Amp
	1010 hrs.
	OFF
	1045 hrs.
	75 Amps.
	1200
	OFF.

TEST Report CHROME Dept.

Loads Running in Tanks while Testing Exhaust Air.

ANALYSIS REPORT

CLIENT: Hytek

DATE RECEIVED: 5/19/89

DATE REPORTED: 5/22/89

REPORT TO: Kris Hansen
Air Quality Division
Am Test, Inc.

Laboratory Sample Nos.	Client Identification	Hexavalent Chromium
Solutions (ug)		
907730	Blank 0.1 NaOH	<2.5
907731	Scrubber 1/2 Inlet R1	25,648.
907732	Scrubber 1/2 Inlet R2	3,431.
907733	Scrubber 1/2 Outlet R1	69.5
907734	Scrubber 1/2 Outlet R2	135.1
907735	Chrom Anodizing Tank R1	184.9
907736	Chrom Anodizing Tank R2	12.37
907737	Chrom Anodizing Tank R3	83.
Filters (ug/filter)		
907738	Scrubber 1/2 Inlet R1	<0.60
907739	Scrubber 1/2 Inlet R2	0.65
907740	Scrubber 1/2 Outlet R1	<0.60
907741	Scrubber 1/2 Outlet R2	1.2
907742	Chrom Anodizing Tank R1	<0.60
907743	Chrom Anodizing Tank R2	<0.60
907744	Chrom Anodizing Tank R3	<0.60

METHOD 1 - MINIMUM NUMBER OF TRAVERSE POINTS

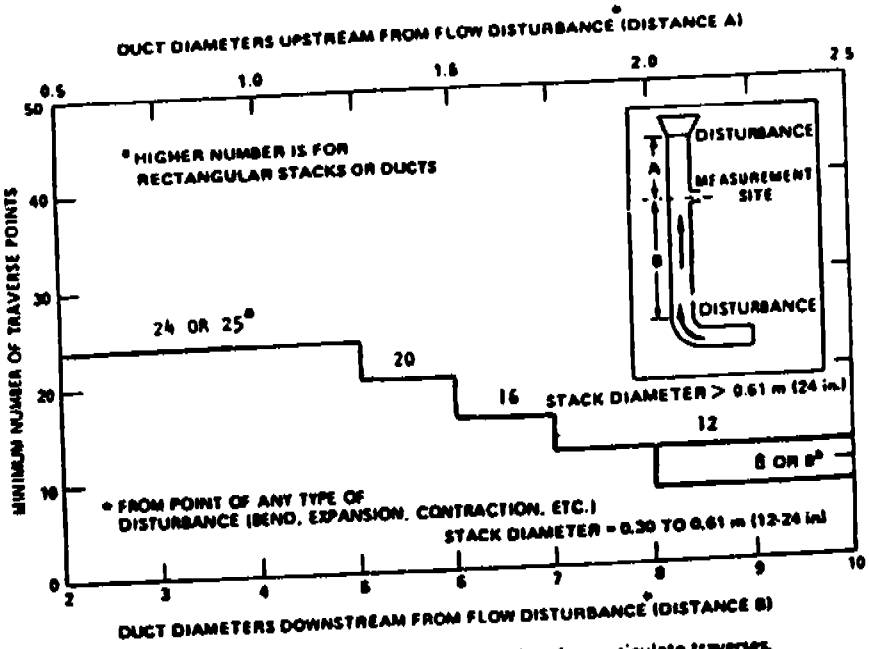

Figure 1-1. Minimum number of traverse points for particulate traverses.

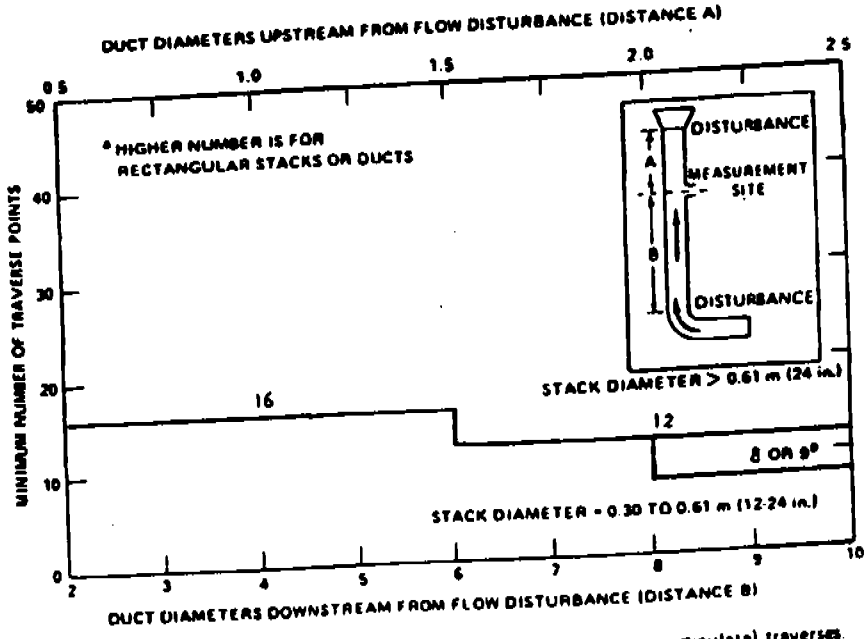

Figure 1-2. Minimum number of traverse points for velocity (nonparticulate) traverses.

METHOD 1 - LOCATION OF TRAVERSE POINTS

Circular Stacks

TRAVERSE POINT	DISTANCE, % of diameter
1	4.4
2	14.7
3	29.5
4	70.5
5	85.3
6	95.6

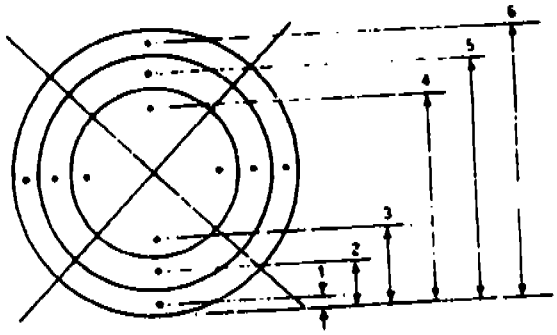

Figure 1-3. Example showing circular stack cross section divided into 12 equal areas, with location of traverse points indicated.

TABLE 1-2. LOCATION OF TRAVERSE POINTS IN CIRCULAR STACKS

(Percent of stack diameter from inside wall to traverse point)

Traverse point number on a diameter	Number of traverse points on a diameter—											
	2	4	6	8	10	12	14	16	18	20	22	24
1	14.6	6.7	4.4	3.2	2.6	2.1	1.8	1.6	1.4	1.3	1.1	1.1
2	85.4	25.0	14.6	10.5	8.2	6.7	5.7	4.9	4.4	3.9	3.5	3.2
3		75.0	29.6	19.4	14.6	11.8	9.9	8.5	7.5	6.7	6.0	5.5
4		93.3	70.4	32.3	22.6	17.7	14.6	12.5	10.9	9.7	8.7	7.9
5			85.4	67.7	34.2	25.0	20.1	16.9	14.6	12.9	11.6	10.5
6			95.6	80.6	65.8	35.6	26.9	22.0	18.8	16.5	14.6	13.2
7				89.5	77.4	64.4	36.6	28.3	23.6	20.4	18.0	16.1
8				96.8	85.4	75.0	63.4	37.5	29.6	25.0	21.8	19.4
9					91.8	82.3	73.1	62.5	38.2	30.6	26.2	23.0
10					97.4	88.2	78.9	71.7	61.8	39.8	31.5	27.2
11						93.3	85.4	78.0	70.4	61.2	39.3	32.3
12						97.9	90.1	83.1	76.4	69.4	60.7	39.8
13							94.3	87.5	81.2	75.0	68.5	60.2
14							98.2	91.5	85.4	79.8	73.8	67.7
15								95.1	89.1	83.5	78.2	72.8
16								98.4	92.5	87.1	82.0	77.0
17									95.6	90.3	85.4	80.6
18									98.6	93.3	88.4	83.9

Rectangular Stacks

For a rectangular cross section, an equivalent diameter (D_e) shall be calculated from the following equation, to determine the upstream and downstream distances:

$$D_e = \frac{2LW}{(L+W)}$$

where L=length and W=width.

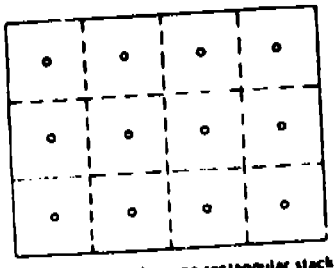

Figure 1-4. Example showing rectangular stack cross section divided into 12 equal areas, with a traverse point at centroid of each area

METHOD 2 - STACK GAS VELOCITY AND VOLUMETRIC FLOW CALCULATIONS

5.1 Nomenclature.

A = Cross-sectional area of stack, m^2 (ft^2).
B_{ws} = Water vapor in the gas stream (from Method 5 or Reference Method 4), proportion by volume.
C_p = Pitot tube coefficient, dimensionless.
K_p = Pitot tube constant,

$$34.97 \frac{m}{sec}\left[\frac{(g/g\text{-mole})(mm\ Hg)}{(°K)(mm\ H_2O)}\right]^{1/2}$$

for the metric system and

$$85.49 \frac{ft}{sec}\left[\frac{(lb/lb\text{-mole})(in.\ Hg)}{(°R)(in.\ H_2O)}\right]^{1/2}$$

for the English system.

M_d = Molecular weight of stack gas, dry basis (see Section 3.6) g/g-mole (lb/lb-mole).
M_s = Molecular weight of stack gas, wet basis, g/g-mole (lb/lb-mole).

$$= M_d(1 - B_{ws}) + 18.0\ B_{ws} \qquad \text{Eq. 2-5}$$

P_{bar} = Barometric pressure at measurement site, mm Hg (in. Hg).
P_g = Stack static pressure, mm Hg (in. Hg).
P_s = Absolute stack gas pressure, mm Hg (in. Hg).

$$= P_{bar} + P_g \qquad \text{Eq. 2-6}$$

P_{std} = Standard absolute pressure, 760 mm Hg (29.92 in. Hg).
Q_{sd} = Dry volumetric stack gas flow rate corrected to standard conditions, dscm/hr (dscf/hr).
t_s = Stack temperature, °C (°F).
T_s = Absolute stack temperature, °K, (°R).

$$= 273 + t_s \text{ for metric.} \qquad \text{Eq. 2-7}$$

$$= 460 + t_s \text{ for English.} \qquad \text{Eq. 2-8}$$

T_{std} = Standard absolute temperature, 293 °K (528° R).
v_s = Average stack gas velocity, m/sec (ft/sec).
Δp = Velocity head of stack gas, mm H_2O (in. H_2O).
3,600 = Conversion factor, sec/hr.
18.0 = Molecular weight of water, g/g-mole (lb/lb-mole).

5.2 Average Stack Gas Velocity.

$$v_s = K_p C_p (\sqrt{\Delta p})_{avg} \sqrt{\frac{T_{s\,avg}}{P_s M_s}}$$

Equation 2-9

5.3 Average Stack Gas Dry Volumetric Flow Rate.

$$Q_{sd} = 3{,}600(1 - B_{ws}) v_s A \left(\frac{T_{std}}{T_{s\,avg}}\right)\left(\frac{P_s}{P_{std}}\right)$$

Eq. 2-10

METHOD 3 - MOLECULAR WEIGHT AND EXCESS AIR CALCULATIONS

6.1 Nomenclature.

M_d = Dry molecular weight, g/g-mole (lb/lb-mole).
%EA = Percent excess air.
$\%CO_2$ = Percent CO_2 by volume (dry basis).
$\%O_2$ = Percent O_2 by volume (dry basis).
%CO = Percent CO by volume (dry basis).
$\%N_2$ = Percent N_2 by volume (dry basis).
0.264 = Ratio of O_2 to N_2 in air, v/v.
0.280 = Molecular weight of N_2 or CO, divided by 100.
0.320 = Molecular weight of O_2 divided by 100.
0.440 = Molecular weight of CO_2 divided by 100.

6.2 Percent Excess Air. Calculate the percent excess air (if applicable), by substituting the appropriate values of percent O_2, CO, and N_2 (obtained from Section 4.1.3 or 4.2.4) into Equation 3-1.

$$\%EA = \frac{\%O_2 - 0.5\%\ CO}{0.264\%\ N_2 - (\%O_2 - 0.5\%\ CO)} \times 100 \qquad \text{Eq. 3-1}$$

NOTE: The equation above assumes that ambient air is used as the source of O_2 and that the fuel does not contain appreciable amounts of N_2 (as do coke oven or blast furnace gases). For those cases when appreciable amounts of N_2 are present (coal, oil, and natural gas do not contain appreciable amounts of N_2) or when oxygen enrichment is used, alternate methods, subject to approval of the Administrator, are required.

6.3 Dry Molecular Weight. Use Equation 3-2 to calculate the dry molecular weight of the stack gas

$$M_d = 0.440(\%CO_2) + 0.320(\%O_2) + 0.280(\%N_2 + \%CO) \qquad \text{Eq. 3-2}$$

METHOD 4 - STACK GAS MOISTURE CALCULATIONS

2.3.1 Nomenclature.

B_{ws} = Proportion of water vapor, by volume, in the gas stream.

M_w = Molecular weight of water, 18.0 g/g-mole (18.0 lb/lb-mole).

P_m = Absolute pressure (for this method, same as barometric pressure) at the dry gas meter, mm Hg (in. Hg).

P_{std} = Standard absolute pressure, 760 mm Hg (29.92 in. Hg).

R = Ideal gas constant, 0.06236 (mm Hg) (m^3)/(g-mole) (°K) for metric units and 21.85 (in. Hg) (ft^3)/(lb-mole) (°R) for English units.

T_m = Absolute temperature at meter, °K (°R).

T_{std} = Standard absolute temperature, 293° K (528°R).

V_m = Dry gas volume measured by dry gas meter, dcm (dcf).

ΔV_m = Incremental dry gas volume measured by dry gas meter at each traverse point, dcm (dcf).

$V_{m(std)}$ = Dry gas volume measured by the dry gas meter, corrected to standard conditions, dscm (dscf).

$V_{wc(std)}$ = Volume of water vapor condensed corrected to standard conditions, scm (scf).

$V_{wg(std)}$ = Volume of water vapor collected in silica gel corrected to standard conditions, scm (scf).

V_f = Final volume of condenser water, ml.

V_i = Initial volume, if any, of condenser water, ml.

W_f = Final weight of silica gel or silica gel plus impinger, g.

W_i = Initial weight of silica gel or silica gel plus impinger, g.

Y = Dry gas meter calibration factor.

ρ_w = Density of water, 0.9982 g/ml (0.002201 lb/ml).

2.3.2 Volume of Water Vapor Condensed.

$$V_{wc(std)} = \frac{(V_f - V_i)\rho_w R T_{std}}{P_{std} M_w}$$

$$= K_1 (V_f - V_i)$$

Eq. 4-1

K_1 = 0.001333 m^3/ml for metric units
= 0.04707 ft^3/ml for English units

2.3.3 Volume of Water Vapor Collected in Silica Gel.

$$V_{wg(std)} = \frac{(W_f - W_i) R T_{std}}{P_{std} M_w}$$

$$= K_2 (W_f - W_i)$$

Eq. 4-2

Where:

K_2 = 0.001335 m^3/g for metric units
= 0.04715 ft^3/g for English units

2.3.4 Sample Gas Volume.

$$V_{m(std)} = V_m Y \frac{(P_m)(T_{std})}{(P_{std})(T_m)}$$

$$= K_3 Y \frac{V_m P_m}{T_m}$$

Eq. 4-3

Where:

K_3 = 0.3858 °K/mm Hg for metric units
= 17.64 °R/in. Hg for English units

NOTE: If the post-test leak rate (Section 2.2.6) exceeds the allowable rate, correct the value of V_m in Equation 4-3, as described in Section 6.3 of Method 5.

2.3.5 Moisture Content.

$$B_{ws} = \frac{V_{wc(std)} + V_{wg(std)}}{V_{wc(std)} + V_{wg(std)} + V_{m(std)}}$$

Eq. 4-4

NOTE: In saturated or moisture droplet-laden gas streams, two calculations of the moisture content of the stack gas shall be made, one using a value based upon the saturated conditions (see Section 1.2), and another based upon the results of the impinger analysis. The lower of these two values of B_{ws} shall be considered correct.

METHOD 5 - PARTICULATE EMISSION CALCULATIONS - (1)

6.1 Nomenclature.

A_n = Cross-sectional area of nozzle, m^2 (ft^2).

B_{wo} = Water vapor in the gas stream, proportion by volume.

C_a = Acetone blank residue concentration, mg/g.

c_s = Concentration of particulate matter in stack gas, dry basis, corrected to standard conditions, g/dscm (g/dscf).

I = Percent of isokinetic sampling.

L_a = Maximum acceptable leakage rate for either a pretest leak check or for a leak check following a component change; equal to 0.0057 m^3/min (0.02 cfm) or 4 percent of the average sampling rate, whichever is less.

L_i = Individual leakage rate observed during the leak check conducted prior to the "i^{th}" component change (i=1, 2, 3,...n), m^3/min (cfm).

L_p = Leakage rate observed during the post-test leak check, m^3/min (cfm).

m_a = Mass of residue of acetone after evaporation, mg.

m_n = Total amount of particulate matter collected, mg.

M_w = Molecular weight of water, 18.0 g/g-mole (18.0lb/lb-mole).

P_{bar} = Barometric pressure at the sampling site, mm Hg (in. Hg).

P_s = Absolute stack gas pressure, mm Hg (in. Hg).

P_{std} = Standard absolute pressure, 760 mm Hg (29.92 in. Hg).

R = Ideal gas constant, 0.06236 mm Hg-m^3/°K-g-mole (21.85 in. Hg-ft^3/°R-lb-mole).

T_m = Absolute average dry gas meter temperature (see Figure 5-2), °K (°R).

T_s = Absolute average stack gas temperature (see Figure 5-2), °K (°R).

T_{std} = Standard absolute temperature, 293° K (528° R).

V_a = Volume of acetone blank, ml.

V_{aw} = Volume of acetone used in wash, ml.

V_{lc} = Total volume of liquid collected in impingers and silica gel (see Figure 5-3), ml.

V_m = Volume of gas sample as measured by dry gas meter, dcm (dscf).

$V_{m(std)}$ = Volume of gas sample measured by the dry gas meter, corrected to standard conditions, dscm (dscf).

$V_{w(std)}$ = Volume of water vapor in the gas sample, corrected to standard conditions, scm (scf).

v_s = Stack gas velocity, calculated by Method 2, Equation 2-9, using data obtained from Method 5, m/sec (ft/sec).

W_a = Weight of residue in acetone wash, mg.

Y = Dry gas meter calibration factor.

ΔH = Average pressure differential across the orifice meter (see Figure 5-2), mm H_2O (in. H_2O).

ρ_a = Density of acetone, mg/ml (see label on bottle).

ρ_w = Density of water, 0.9982 g/ml (0.002201 lb/ml).

θ = Total sampling time, min.

θ_i = Sampling time interval, from the beginning of a run until the first component change, min.

θ_i = Sampling time interval, between two successive component changes, beginning with the interval between the first and second changes, min.

θ_p = Sampling time interval, from the final (n^{th}) component change until the end of the sampling run, min.

13.6 = Specific gravity of mercury.

60 = Sec/min.

100 = Conversion to percent.

6.2 Average Dry Gas Meter Temperature and Average Orifice Pressure Drop. See data sheet (Figure 5-2).

6.3 Dry Gas Volume. Correct the sample volume measured by the dry gas meter to standard conditions (20° C, 760 mm Hg or 68° F, 29.92 in. Hg) by using Equation 5-1.

$$V_{m(std)} = V_m Y \left(\frac{T_{std}}{T_m}\right)\left[\frac{P_{bar} + \frac{\Delta H}{13.6}}{P_{std}}\right]$$

$$= K_1 V_m Y \frac{P_{bar} + (\Delta H/13.6)}{T_m}$$

Equation 5-1

Where:

K_1 = 0.3858 °K/mm Hg for metric units

= 17.64 °R/in. Hg for English units

NOTE: Equation 5-1 can be used as written unless the leakage rate observed during any of the mandatory leak checks (i.e., the post-test leak check or leak checks conducted prior to component changes) exceeds L_a. If L_p or L_i exceeds L_a, Equation 5-1 must be modified as follows:

(a) Case I. No component changes made during sampling run. In this case, replace V_m in Equation 5-1 with the expression:

$$[V_m - (L_p - L_a)\theta]$$

(b) Case II. One or more component changes made during the sampling run. In this case, replace V_m in Equation 5-1 by the expression:

$$\left[V_m - (L_1 - L_a)\theta_1 - \sum_{i=2}^{n} (L_i - L_a)\theta_i - (L_p - L_a)\theta_p\right]$$

and substitute only for those leakage rates (L_i or L_p) which exceed L_a.

6.4 Volume of Water Vapor.

METHOD 5 - PARTICULATE EMISSION CALCULATIONS - (2)

Equation 5-2

$$V_{w(std)} = V_{lc}\left(\frac{\rho_w}{M_w}\right)\left(\frac{RT_{std}}{P_{std}}\right) = K_2 V_{lc}$$

Where:

$K_2 = 0.001333$ m³/ml for metric units

$= 0.04707$ ft³/ml for English units.

6.5 Moisture Content.

$$B_{ws} = \frac{V_{w(std)}}{V_{m(std)} + V_{w(std)}}$$

Eq. 5-3

NOTE: In saturated or water droplet-laden gas streams, two calculations of the moisture content of the stack gas shall be made, one from the impinger analysis (Equation 5-3), and a second from the assumption of saturated conditions. The lower of the two values of B_{ws} shall be considered correct. The procedure for determining the moisture content based upon assumption of saturated conditions is given in the Note of Section 1.2 of Method 4. For the purposes of this method, the average stack gas temperature from Figure 5-2 may be used to make this determination, provided that the accuracy of the in-stack temperature sensor is ±1° C (2° F).

6.6 Acetone Blank Concentration.

$$C_a = \frac{m_a}{V_a \rho_a}$$

Eq. 5-4

6.7 Acetone Wash Blank.

$$W_a = C_a V_{aw} \rho_a$$

Eq. 5-5

6.8 Total Particulate Weight. Determine the total particulate catch from the sum of the weights obtained from Containers 1 and 2 less the acetone blank (see Figure 5-3).

NOTE: Refer to Section 4.1.5 to assist in calculation of results involving two or more filter assemblies or two or more sampling trains.

6.9 Particulate Concentration.

$$c_s = (0.001\ g/mg)(m_n / V_{m(std)})$$

Eq. 5-6

6.10 Conversion Factors:

From	To	Multiply by
scf	m³	0.02832
g/ft³	g/m³	15.43
g/ft³	lb/ft³	2.205×10^{-3}
g/ft³	g/m³	35.31

6.11 Isokinetic Variation.

6.11.1 Calculation From Raw Data.

$$I = \frac{100\ T_s(K_3 V_{lc} + (P_m / T_m) K_4 V_{w(std)} + \Delta H / 13.6))}{60 \theta v_s P_s A_n}$$

Eq. 5-7

Where:

$K_3 = 0.003454$ mm Hg-m³/ml-°K for metric units.

$= 0.002669$ in. Hg-ft³/ml-°R for English units.

6.11.2 Calculation From Intermediate Values.

$$I = \frac{T_s V_{m(std)} P_{std} 100}{T_{std} v_s \theta A_n P_s 60(1 - B_{ws})}$$

$$= K_5 \frac{T_s V_{m(std)}}{P_s V_s A_n \theta (1 - B_{ws})}$$

Equation 5-8

where:

$K_5 = 4.320$ for metric units

$= 0.09450$ for English units.

6.12 Acceptable Results. If 90 percent < I < 110 percent, the results are acceptable. If the particulate results are low in comparison to the standard, and I is over 110 percent or less than 90 percent, the Administrator may accept the results.

NOMENCLATURE
METHOD 5 CALCULATIONS

Vm_{std} = Volume of gas sample measured by the dry gas meter, corrected to standard conditions, dscm (dscf).

Y = Dry gas meter calibration factor

P_b = Barometric pressure at the sampling site, mm Hg (in. Hg)

H = Average pressure differential across the orifice meter, mm H_2O (in. H_2O)

T_m = Absolute average dry gas meter temperature, ° K (° R)

dscm = Dry standard cubic meters

dscf = Dry standard cubic feet

W_a = Weight of residue in acetone wash

M_a = Mass of residue of acetone after evaporation, mg

C_a = Acetone blank residue concentration, mg/g

V_a = Volume of acetone blank

V_{aw} = Volume of acetone used in wash, ml

M_n = Total amount of particulate matter collected, mg

C_s = Concentration of particulate matter in stack gas, dry basis, corrected to standard conditions, mg/dscm (gr/dscf)

gr/dscf = grains per dry standard cubic foot

Vw_{std} = Volume of water vapor in the gas sample, corrected to standard conditions, scm (scf)

B_{ws} = Water vapor in the gas stream, proportion by volume

M_d = Molecular weight of stack gas, g/g-mole on dry basis

M_s = Molecular weight of stack gas, g/g-mole on wet basis

V_s = Stack gas velocity, calculated by Method 2, Equation 2-9, using data obtained from Method 5, m/sec (ft/sec)

C_p = Pitot tube coefficient, dimensionless

Δp = Velocity head of stack gas, mm H_2O (in. H_2O)

P_s = Absolute stack gas pressure, mm Hg (in. Hg)

NOMENCLATURE (continued)
METHOD 5 CALCULATIONS

Q_{std} = Dry volumetric stack gas flow rate corrected to standard conditions, dscm/hr (dscf/hr)

dscf/min = dry standard cubic feet per minute (also identified as dcfm or scfm)

acfm = actual cubic feet per minute

I = Percent of isokinetic sampling

A_n = Cross-sectional area of nozzle, m^2 (ft^2)

SAMPLE CALCULATION SHEET
METHODS 1-5

CLIENT: Hytek Finishes Co. DATE OF TEST: 5-18-89

LOCATION: Chrome Anodizing Tank RUN #: 1

Particulate Matter Emission Concentration - Equation 5-1

Vm_{std} = 17.647*39.423ft³*.98 *(30.16"Hg + (1.476"H_2O/13.6))/(460 + 74.9° F)

= 38.580 dscf

dscm = 38.580 dscf/35.3 ft³/m³

= 1.093 dscm

Substitution of Equation 5-4 into 5-5

W_a = _____mg * _____ml /_____ml

= _____mg

M_n = (net weight filter catch) + (net weight "B" section) - Wa + Back-half

= _____mg = _____mg + _____mg - _____mg +_____mg

C_s= (0.001 g/mg) * (15.43 grains/gram) * _____mg /_____dscf

= _____gr/dscf (Equation 5-6)

gr/dscf @7% O_2 = _____gr/dscf * (20.9% - 7%O_2)/(20.9% - _____%O_2)

= _____gr/dscf @ 7% O_2

gr/dscf @ 12% CO_2 = _____gr/dscf * 12% / _____%CO_2

= _____gr/dscf @ 12% CO_2

mg/dscm = _____mg/_____dscm

= _____mg/dscm

Particulate Matter Emission Rate

pounds/hour = _____gr/dscf * _____dscf/min * 60 min/hr * 1 lb/7000 grains

= _____lb/hr

Moisture - Equation 5-2 and 5-3

Vw_{std} = (0.04707 * 3.3 grams of H_2O condensed) +
(0.04715 * 6.2 grams of H_2O in silica gel)

= 0.45 scf

SAMPLE CALCULATION SHEET (continued)
METHODS 1-5

B_{ws} = (0.45 scf)/(0.45 scf + 38.580 dscf)

= 0.0115

%Moisture = 0.0115 * 100

= 1.15 %

Molecular weight - Equation 3-2

M_d = 0.440 * (0 %CO_2) + 0.320 * (20.9 %O_2) + 0.280 * (79.1 % CO + %N_2)

M_d = 28.84 g/g-mole (dry)

M_s = 28.84 g/g-mole * (1 - .0115) + 18.0 * .0115

3 M_s = 28.71 g/g-mole (wet)

Stack gas velocity and volumetric flow rate - Equation 2-9 and 2-10

V_s = 85.49 * .80 * 0.722 * $\sqrt{532.1}$° R / 28.71 g/g-mole / 29.66 "Hg

6 V_s = 49.83 ft/sec (std)

Q_{sd} = 3600 * (1 - .0115) * 49.83 ft/sec * 7.069 ft^2 * (528 ° R/532.1 ° R) * (29.66 "Hg/ 29.92 "Hg)

= 1233108 dscf/hr / 60 min/hr

4 = 20552.1 dscf/min (dry standard cubic feet per minute)

acfm = 49.83 ft/sec * 7.069 ft^2* 60 sec/min

= 21135.0 acfm (actual cubic feet per minute)

Isokinetic variation - Equation 5-8

I = 0.09450 * 38.580 dscf * 532.1° R/(29.66 "Hg * 49.83 ft/sec * 60 min * .000235 ft^2 *(1 - .0115))

I = 96 % OK

All of the above numbered equations are from the 40 CFR 60 and assume English units.

AT

Example Calculations for Hexavalent Chromium

315 milliliters of 0.1 N NaOH solution & a back-up Teflon filter submitted
Lab results reported in units of total micrograms (already accounted for volume of solution)

To calculate milligrams per dry standard cubic meter of gas sampled:

$$\left(184.9\ \mu g + \underset{\text{(counted as zero in calculation)}}{<0.60\ \mu g}\right) * \frac{1\ mg}{1000\ \mu g} / 1.093\ dscm = \underline{\underline{0.169\ mg/dscm}}$$

$$0.169\ \frac{mg}{dscm} * \frac{22.414\ ml/m\text{-}mole}{51.996\ mg/m\text{-}mole} * \frac{293.15°K}{273.15°K} * \frac{1\ m^3}{1\times10^6\ ml} * 1\times10^6\ ppm = \underline{\underline{0.078\ ppm}}$$

$$0.169\ \frac{mg}{dscm} * \frac{60\ min/hr}{35.32\ ft^3/m^3} * 20552.1\ \frac{dscf}{min} = \underline{\underline{5906.5\ mg/hr}}$$

Ampere-hours per hour = 356

$$\frac{5906.1\ mg/hr}{356\ amp\text{-}hr/hr} = \underline{\underline{16.59\ mg/amp\text{-}hr}}$$

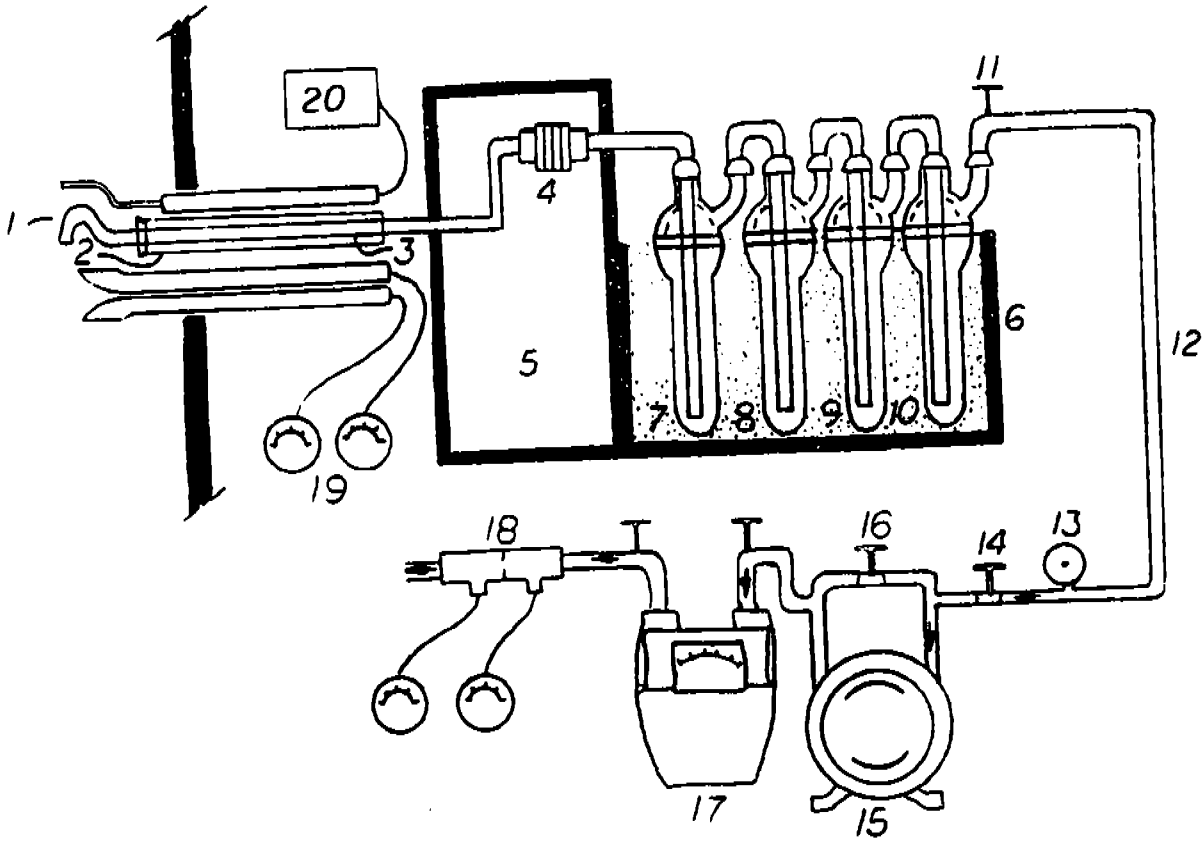

Figure 1. EPA Method 5 particulate sampling train.

1. Sampling nozzle
2. Sampling probe sheath
3. Heated sample probe liner
4. Out of stack filter assembly
5. Heated filter compartment maintained at 248°F ± 25°F (or temperature specified in 40 CFR subpart)
6. Impinger case
7. First impinger containing 100 ml H_2O
8. Modified Greenburg-Smith impinger containing 100 ml H_2O
9. Third impinger - dry
10. Fourth impinger containing indicating silica gel desiccant
11. Impinger exit gas temperature sensor
12. Umbilical cord - vacuum line
13. Pressure gauge
14. Coarse adjustment valve
15. Leak free pump
16. By-pass valve
17. Dry gas meter with inlet and outlet temperature sensors
18. Orifice meter with magnehelic gauges
19. "S" type pitot tubes with magnehelic gauges
20. Thermocouple sensor

63

AT

TRAVERSE SAMPLING DATA

907735

Client HYTEK
Date 5-18-89
Sample Location Outlet - Chrome Anodizing
Operators JJG - SMW
Sample Box # 4 (White)
Run# 1

SCHEMATIC TRAVERSE LAYOUT

Stack Diameter 36" Ø
Distance Upstream
Distance Downstream

Start Time 1643
Stop Time 1743
Barometric Pressure "Hg 30.16" 766 mm
Static Pres "H_2O -6.5
Production Rate 356 amp-hr/hr

EQUIPMENT CHECKS

Initial/Final

Leak Rate Cfm 0.01 / ____
Leak Test Vac 15 / ____
✓ Pitots, Pretest
✓ Pitots, Postest
✓ Orsat Sampling System
✓ Tedlar Bag
____ Thermocouple @ ____ °F

Filter # ____ tare ____ mgs

	Final Wt.	Initial Wt.	Net Wt.
#1 Bubbler	6388 -	6373 -	____
#2 Impinger	5960 -	5947 -	____
#3 Bubbler	5273 -	5268 -	____
#4 Silica Gel	8103	8104.1 -	____

TOTAL WATER VOLUME ____

NOMOGRAPH SETUP

% Moisture 2
Meter Temp. 75
Stack Temp. 69
ΔH@ 1.70 Y .98
Pitot# 5 Side# A
Cp .80
Nozzle Diameter .206
K Factor 1.72
Reference ΔP ____

Sample Point	Elap Time Min.	Dry Gas Meter Reading Cu. Ft.	Pitot Reading (ΔP), In. H_2O	Orifice Setting (ΔH), In H_2O Ideal	Orifice Setting (ΔH), In H_2O Actual	Gas Meter Temp °F In	Gas Meter Temp °F Out	Pump Vacuum In. Hg Gauge	Filter Box Temp °F	Imp. Exit Temp °F	Stack Temp °F
1	0	148.417	1.0	1.72	1.72	60	58	5		50	72
2	5		1.0	1.72	1.72	72	59	5		50	72
3	10		1.0	1.72	1.72	79	61	5		50	73
4	15		1.05	1.80	1.80	82	63	5½	N/A	50	73
5	20		1.0	1.72	1.72	84	65	5		50	72
6	25		1.0	1.72	1.72	87	67	5		49	72
7	30		.70	1.2	1.2	87	69	4		49	71
8	35		.62	1.06	1.06	87	71	4		49	71
9	40		.62	1.06	1.06	87	72	4		49	71
10	45		.70	1.21	1.21	88	73	4½		50	73
11	50		.80	1.39	1.39	89	74	5		50	72
12	55		.80	1.39	1.39	89	74	5			
1.0	1.0	187.720									

V_m $(\sqrt{\Delta P})^2$ $\frac{1.476}{\Delta H}$ $\frac{74.9}{T_m}$ T_s

907736

TRAVERSE SAMPLING DATA

Client HYTEK
Date 5-15-89
Sample Location Chrome
Plating Tank (No data)
Operators JMG - Jim
Sample Box # C
Run# 2

EQUIPMENT CHECKS

	Initial	Final
Leak Rate Cfm	2.01	1.005
Leak Test Vac	15	15

✓ Pitots, Pretest
✓ Pitots, Postest
✓ Orsat Sampling System
✓ Tedlar Bag
Thermocouple @ °F

SCHEMATIC TRAVERSE LAYOUT

Stack Diameter 36" Ø
Distance Upstream
Distance Downstream

Filter # tare mgs

	Final Wt.	Initial Wt.	Net Wt.
#1 Bubbler	1041.0	638.6 -	
#2 Impinger	592.7	644.8 -	
#3 Bubbler	586.1	533.0 -	
#4 Silica Gel	802.5	794.7 -	

TOTAL WATER VOLUME

Start Time 1755
Stop Time 1955
Barometric Pressure "Hg 30.16"
Pressure "Hg 766 mm
Static Pres "H_2O -6.99
Production Rate
no parts Oamp-tin/tin

NOMOGRAPH SETUP

% Moisture
Meter Temp.
Stack Temp.
ΔH@ 1.80 Y .98
Pitot# Side#
Cp .80
Nozzle Diameter .256
K Factor
Reference ΔP

Sample Point	Elap Time Min.	Dry Gas Meter Reading Cu. Ft.	Pitot Reading (ΔP), In. H_2O	Orifice Setting (ΔH), In H_2O Ideal	Orifice Setting (ΔH), In H_2O Actual	Gas Meter Temp °F In	Gas Meter Temp °F Out	Pump Vacuum In. Hg Gauge	Filter Box Temp °F	Imp. Exit Temp °F	Stack Temp °F
1	0	188.102	1.0	1.73	1.73	74	68	4½		49	71
2	10		1.0	1.73	1.73	80	69	4½		49	71
3	20		1.0	1.73	1.73	82	71	4½		49	71
4	30		1.05	1.82	1.82	90	75	5		49	72
5	40		1.0	1.73	1.73	91	76	4½		50	72
6	50		1.0	1.73	1.73	91	77	4½		50	72
7	60		.70	1.22	1.22	90	77	4		49	71
8	70		.64	1.11	1.11	88	77	3½		49	70
9	80		.64	1.11	1.11	88	77	3½		49	71
10	90		.71	1.24	1.24	88	77	4		49	71
11	100		.80	1.39	1.39	88	76	4½		49	70
12	110		.80	1.39	1.39	88	76	4½		49	70
avg	120	268.061									

V_m $(\sqrt{\Delta P})^2$ $\frac{1}{\Delta H}$ 1.499 T_m 80.6 T_a

907737

TRAVERSE SAMPLING DATA

Client HYTEK
Date 5-18-87
Sample Location Chrome Analyzing Tank (Plant)
Operators [illegible]
Sample Box # Red-1
Run# 3

EQUIPMENT CHECKS

Initial/Final

Leak Rate Cfm .01 / ____
Leak Test Vac 15 / ____
✓ Pitots, Pretest
✓ Pitots, Postest
✓ Orsat Sampling System
✓ Tedlar Bag
✓ Thermocouple @ ____ °F

SCHEMATIC TRAVERSE LAYOUT

Stack Diameter 36" Ø
Distance Upstream 72"
Distance Downstream 32"

Filter # ____ tare ____ mgs

	Final Wt.	Initial Wt.	Net Wt.
#1 Bubbler	604.5	601.1	
#2 Impinger	576.0	575.6	
#3 Bubbler	533.9	533.7	
#4 Silica Gel	781.1	774.6	

TOTAL WATER VOLUME ____

Start Time 2038
Stop Time 2138
Barometric Pressure "Hg 30.12" 765 mm
Static Pres "H_2O -6.8
Production Rate 356 amp-hr/hr

NOMOGRAPH SETUP

% Moisture ____
Meter Temp. ____
Stack Temp. ____
ΔH@ 1.80 Y .98
Pitot# 5 Side# A
Cp .80
Nozzle Diameter .205
K Factor ____
Reference ΔP ____

Sample Point	Elap Time Min.	Dry Gas Meter Reading Cu. Ft.	Pitot Reading (ΔP), In. H_2O	Orifice Setting (ΔH), In H_2O Ideal	Actual	Gas Meter Temp °F In	Out	Pump Vacuum In. Hg Gauge	Filter Box Temp °F	Imp. Exit Temp °F	Stack Temp °F
1	0	268.300	1.0	1.72	1.72	62	57	3		47	69
2	5		1.0	1.72	1.72	70	58	3		47	69
3	10		1.0	1.72	1.72	73	61	3	N/A	47	69
4	15		1.05	1.73	1.83	78	62	3½		46	68
5	20		1.0	1.72	1.72	80	63	3		46	68
6	25		1.0	1.72	1.72	81	65	3		46	68
7	30		.78	1.25	1.25	82	67	2½		45	69
8	35		.67	1.17	1.17	82	68	2½		45	68
9	40		.67	1.17	1.17	83	69	2½		45	68
10	45		.72	1.25	1.25	83	70	3		45	68
11	50		.80	1.39	1.39	84	71	3		44	69
12	55		.80	1.39	1.39	84	71	3		44	68
END	60	268.230									

V ____ $(\sqrt{\Delta P})^2$ ____ ΔH 1.504 T_m 71.8 T_s ____

TRAVERSE SAMPLING DATA

Client: ATEK
Date: 5-18-89
Sample Location: Scrubber 1/2
Operators: JB KMW
Sample Box #: B (Red)
Run #: I - Inlet

EQUIPMENT CHECKS

Initial/Final

Leak Rate Cfm: 2.01 / ____
Leak Test Vac: 15 / ____
✓ Pitots, Pretest
✓ Pitots, Postest
✓ Orsat Sampling System
✓ Tedlar Bag
____ Thermocouple @ ____ °F

SCHEMATIC TRAVERSE LAYOUT

Stack Diameter: 36"
Distance Upstream: ____
Distance Downstream: ____

Filter # ____ tare ____ mgs

	Final Wt.	Initial Wt.	Net Wt.
#1 Bubbler	594.5	577.4	____
#2 Impinger	618.9	622.1	____
#3 Bubbler	519.2	518.2	____
#4 Silica Gel	785.9	767.9	____

TOTAL WATER VOLUME: ____

Start Time: 9:57
Stop Time: 11:57
Barometric Pressure "Hg: 30.20"
Static Pres "H_2O: 76.7 mm
Production Rate: -2.9
5300 amp hr/hr

NOMOGRAPH SETUP

% Moisture: 2
Meter Temp.: 50
Stack Temp.: 65
ΔH@: .943 Y: .993
Pitot #: 5 Side #: A
Cp: .80
Nozzle Diameter: .375
K Factor: 9.5
Reference ΔP: ____

Sample Point	Elap Time Min.	Dry Gas Meter Reading Cu. Ft.	Pitot Reading (ΔP), In. H_2O	Orifice Setting (ΔH), In H_2O Ideal	Orifice Setting (ΔH), In H_2O Actual	Gas Meter Temp °F In	Gas Meter Temp °F Out	Pump Vacuum In. Hg Gauge	Filter Box Temp °F	Imp. Exit Temp °F	Stack Temp °F
1	0	135.161	.19	1.8	1.8	47	46	11		43	65
2	10		.17	1.6	1.6	57	48	10½	N/A	47	65
3	20		.08	.76	.76	61	51	6		49	65
4	30		.08	.76	.76	61	52	6		49	65
5	40		.11	1.04	1.04	63	55	6½		45	66
6	50		.11	1.04	1.04	65	56	6½		45	67
7	60		.12	1.17	1.17	67	58	7		45	68
8	70		.13	1.26	1.26	68	59	7		46	68
9	80		.135	1.31	1.31	70	60	7½		47	68
10	90		.135	1.31	1.31	70	61	7½		47	69
11	100		.14	1.36	1.36	71	62	8		48	69
12	110		.14	1.36	1.36	72	63	8		48	69
END	120	239.192									

V_m $(\sqrt{\Delta P})^2$ $\frac{1.231}{\Delta H}$ $\frac{60.1}{T_m}$ T_s

AT

TRAVERSE SAMPLING DATA

Client HYTEK
Date 5-18-89
Sample Location Inlet - S 112
Operators JAG - JMW
Sample Box # C (Red)
Run# 2

SCHEMATIC TRAVERSE LAYOUT

Stack Diameter
Distance Upstream
Distance Downstream

Start Time 1245
Stop Time 1445
Barometric Pressure "Hg 30.20"
Pressure "Hg 76.7mm
Static Pres "H_2O -2.9
Production Rate 2889 mp-hr/hr

EQUIPMENT CHECKS

Initial/Final

Leak Rate Cfm <.01 / 1.007
Leak Test Vac 17 / 17
✓ Pitots, Pretest
✓ Pitots, Postest
Orsat Sampling System
N/A Tedlar Bag
Thermocouple @ °F

Filter # tare mgs

	Final Wt.	Initial Wt.	Net Wt.
#1 Bubbler	6468	6389	-
#2 Impinger	6348	6319	-
#3 Bubbler	5423	5408	-
#4 Silica Gel	8056	7838	-

TOTAL WATER VOLUME

NOMOGRAPH SETUP

% Moisture 02
Meter Temp. 70
Stack Temp. 65
ΔH@ .993 Y .993
Pitot# 5 Side# A
Cp .80
Nozzle Diameter .375
K Factor 9.78
Reference ΔP

Sample Point	Elap Time Min.	Dry Gas Meter Reading Cu. Ft.	Pitot Reading (ΔP), In. H_2O	Orifice Setting (ΔH), In H_2O Ideal	Orifice Setting (ΔH), In H_2O Actual	Gas Meter Temp °F In	Gas Meter Temp °F Out	Pump Vacuum In. Hg Gauge	Filter Box Temp °F	Imp. Exit Temp °F	Stack Temp °F
1	0	239.847	.18	1.76	1.76	58	58	9		55	70
2	10		.15	1.47	1.47	69	60	8½		52	71
3	20		.10	.98	.98	72	63	6	N/A	51	71
4	30		.10	.98	.98	73	64	6		53	72
5	40		.11	1.08	1.08	75	66	6		51	72
6	50		.11	1.08	1.08	75	67	6		54	72
7	60		.12	1.17	1.17	77	68	6½		56	72
8	70		.12	1.18	1.18	79	70	6½		58	73
9	80		.13	1.28	1.28	80	71	7		57	72
10	90		.13	1.28	1.28	81	72	7		52	72
11	100		.14	1.38	1.38	80	72	7½		49	72
12	110		.14	1.38	1.38	79	72	7½		48	72
END	120	346.462									

V_ $(\sqrt{\Delta P})^2$ ΔH 1.252 T_m 70.9 T_s

AT

907733

TRAVERSE SAMPLING DATA

Client: H/TEC
Date: 5-15-89
Sample Location: Scrubber 1/2
Operators: JAC - JMW
Sample Box #: A (white)
Run#: 1 - Ondeck

EQUIPMENT CHECKS

Initial/Final

Leak Rate Cfm: <.01 / ____
Leak Test Vac: 15 / ____
✓ Pitots, Pretest
✓ Pitots, Postest
✓ Orsat Sampling System
✓ Tedlar Bag
____ Thermocouple @ ____ °F

SCHEMATIC TRAVERSE LAYOUT

Stack Diameter: 28" Ø
Distance Upstream: ____
Distance Downstream: ____

Filter # ____ tare ____ mgs

	Final Wt.	Initial Wt.	Net Wt.
#1 Bubbler	640.2	635.7	____
#2 Impinger	595.9	591.0	____
#3 Bubbler	527.6	525.9	____
#4 Silica Gel	804.1	791.6	____

TOTAL WATER VOLUME: ____

Start Time: 0959
Stop Time: 1159
Barometric Pressure "Hg: 30.20" / 767mm
Static Pres "H_2O: -4.5
Production Rate: 5300 amps/hr

NOMOGRAPH SETUP

% Moisture: 2
Meter Temp.: 60
Stack Temp.: 165
ΔH@: 1.80 Y: .98
Pitot#: 30 Side#: A
Cp: .82
Nozzle Diameter: .188
K Factor: 1.23
Reference ΔP: ____

Sample Point	Elap Time Min.	Dry Gas Meter Reading Cu. Ft.	Pitot Reading (ΔP), In. H_2O	Orifice Setting (ΔH), In H_2O Ideal	Orifice Setting (ΔH), In H_2O Actual	Gas Meter Temp °F In	Gas Meter Temp °F Out	Pump Vacuum In. Hg Gauge	Filter Box Temp °F	Imp. Exit Temp °F	Stack Temp °F	
1	0	991.357	.65	.80	.80	49	47	3		50	63	
2	10		.65	.80	.80	66	50	3	N/A	50	65	
3	20		.65	.80	.80	74	55	3		50	66	
4	30		.75	.92	.92	80	62	4		50	66	
5	40		.95	1.17	1.17	84	66	4		50	66	
6	50		1.05	1.29	1.29	86	69	4½		50	65	
7	60		1.05	1.34	1.34	88	70	5		50	63	
8	70		.90	1.15	1.15	89	72	4½		51	62	
9	80		.90	1.15	1.15	90	73	4½		50	63	
10	90		1.35	1.72	1.72	92	75	6		50	64	
11	100		1.35	1.72	1.72	93	76	6		51	63	
12	110		1.35	1.72	1.72	93	77	6		52	64	
Avg	120	4.578										

$\overline{V_m}$ $\overline{(\sqrt{\Delta P})^2}$ $\overline{\Delta H}$ 1.215 $\overline{T_m}$ 740 $\overline{T_s}$

AT

TRAVERSE SAMPLING DATA

907734

Client HYTEK
Date 5-18-89
Sample Location Outlet S 1/2
Operators TAG SMW
Sample Box # Red-1 (White)
Run# 2

SCHEMATIC TRAVERSE LAYOUT

Stack Diameter
Distance Upstream
Distance Downstream

Start Time 1247
Stop Time 1447
Barometric Pressure "Hg 30.29" 769 mm
Static Pres "H_2O -4.5
Production Rate 2889 amp-hr/hr

EQUIPMENT CHECKS

Initial/Final

Leak Rate Cfm 2.01 / 1.006
Leak Test Vac 15 / 15
✓ Pitots, Pretest
✓ Pitots, Postest
N/A Orsat Sampling System
N/A Tedlar Bag
Thermocouple @ °F

Filter # tare mgs

	Final Wt.	Initial Wt.	Net Wt.
#1 Bubbler	6075-	6025-	
#2 Impinger	5810	5770-	
#3 Bubbler	5358	5339-	
#4 Silica Gel	7746	7608	

TOTAL WATER VOLUME

NOMOGRAPH SETUP

% Moisture 2
Meter Temp. 75
Stack Temp. 65
ΔH@ 1.80 Y .98
Pitot# 30 Side# A
Cp .82
Nozzle Diameter .206
K Factor 1.82
Reference ΔP

Sample Point	Elap Time Min.	Dry Gas Meter Reading Cu. Ft.	Pitot Reading (ΔP), In. H_2O	Orifice Setting (ΔH), In H_2O Ideal	Orifice Setting (ΔH), In H_2O Actual	Gas Meter Temp °F In	Gas Meter Temp °F Out	Pump Vacuum In. Hg Gauge	Filter Box Temp °F	Imp. Exit Temp °F	Stack Temp °F
1	0	64.785	.55	1.00	1.00	63	60	3		50	71
2	10		.55	1.00	1.00	79	62	3	N/A	50	71
3	20		.55	1.00	1.00	85	68	3		50	70
4	30		.60	1.05	1.05	89	72	3.2		50	70
5	40		.75	1.36	1.36	92	75	4		51	68
6	50		1.0	1.82	1.82	94	77	4.2		51	67
7	60		1.0	1.82	1.82	92	79	4.2		52	67
8	70		1.0	1.82	1.82	96	81	4.2		52	66
9	80		1.10	2.06	2.06	100	83	5		52	67
10	90		1.10	2.06	2.06	100	83	5		52	66
11	100		1.10	2.06	2.06	100	84	5		51	65
12	110		1.10	2.06	2.06	98	83	5		50	66
END	120	148.927									

V	$(\sqrt{\Delta P})^2$	ΔH	T_m	T_s
		1.597	83.4	

AT

907844

TRAVERSE SAMPLING DATA

Client HYTEK
Date 5-15-89
Sample Location Scrubber 3/4 Inlet
Operators JPG/JMW
Sample Box # B (Red)
Run#

EQUIPMENT CHECKS

Initial/Final

Leak Rate Cfm .001/.001
Leak Test Vac 16/16
✓ Pitots, Pretest
✓ Pitots, Postest
✓ Orsat Sampling System
✓ Tedlar Bag
Thermocouple @ °F

SCHEMATIC TRAVERSE LAYOUT

Stack Diameter 30"
Distance Upstream
Distance Downstream

Filter # tare mgs

	Final Wt.	Initial Wt.	Net Wt.
#1 Bubbler	580.6	574.7	
#2 Impinger	623.4	622.0	
#3 Bubbler	519.0	518.6	
#4 Silica Gel	800.1	780.5	

TOTAL WATER VOLUME

Start Time 0709
Stop Time 0907
Barometric Pressure "Hg 30.45" 773mm
Static Pres"H_2O -3.2
Production Rate 1750 amp-hr/hr

NOMOGRAPH SETUP

% Moisture 2
Meter Temp. 58
Stack Temp. 67
ΔH@ .943 Y .993
Pitot# 5 Side# B
Cp .80
Nozzle Diameter .375
K Factor 9.56
Reference ΔP

Sample Point	Elap Time Min.	Dry Gas Meter Reading Cu. Ft.	Pitot Reading (ΔP), In. H_2O	Orifice Setting (ΔH), In H_2O Ideal	Actual	Gas Meter Temp°F In	Out	Pump Vacuum In. Hg Gauge	Filter Box Temp °F	Imp. Exit Temp °F	Stack Temp °F
1	0	317.820	.15	1.43	1.43	48	48	8½		45	62
2	10		.15	1.43	1.43	55	49	8½		47	62
3	20		.13	1.24	1.24	61	51	7½	N/A	47	61
4	30		.12	1.15	1.15	63	54	7		46	63
5	40		.16	1.55	1.55	65	55	9½		46	65
6	50		.15	1.45	1.45	68	57	9		47	63
7	60		.14	1.36	1.36	69	59	8		47	65
8	70		.15	1.45	1.45	69	60	9		48	65
9	80		.15	1.45	1.45	70	61	9		48	65
10	90		.15	1.45	1.45	71	61	9		49	65
11	100		.14	1.36	1.36	71	61	8		49	65
12	110		.14	1.36	1.36	71	62	8		49	65
Σ	120	458.061									

$\overline{V_m}$ $\overline{(\sqrt{\Delta P})^2}$ $\overline{\Delta H}$ 1.390 $\overline{T_m}$ 60.8 $\overline{T_s}$

AT

907845 TRAVERSE SAMPLING DATA

Client: HYTEK
Date: 5-14-89
Sample Location: S 3/4 Inlet
Operators: JAG - JMW
Sample Box #: A
Run#: 2

EQUIPMENT CHECKS

Initial/Final

Leak Rate Cfm: 2.011.003
Leak Test Vac: 19 / 19
/ Pitots, Pretest
/ Pitots, Postest
Orsat Sampling System
N/A Tedlar Bag
Thermocouple @ °F

SCHEMATIC TRAVERSE LAYOUT

Stack Diameter: 30" ϕ
Distance Upstream: 37 ft
Distance Downstream: 18 ft

Filter # tare mgs

	Final Wt.	Initial Wt.	Net Wt.
#1 Bubbler	645.5	638.0	
#2 Impinger	597.5	596.5	
#3 Bubbler	524.8	524.2	
#4 Silica Gel	828.7 ~~828.7~~	810.3	

TOTAL WATER VOLUME

Start Time: 0939
Stop Time: 1159
Barometric Pressure "Hg: 30.47" 774 mm
Static Pres "H_2O: -3.2
Production Rate: 1693 emp-hr/hr

NOMOGRAPH SETUP

% Moisture
Meter Temp.
Stack Temp.
ΔH@ Y .993
Pitot# Side#
Cp .80
Nozzle Diameter .375
K Factor
Reference ΔP

Sample Point	Elap Time Min.	Dry Gas Meter Reading Cu. Ft.	Pitot Reading (ΔP), In. H_2O	Orifice Setting (ΔH), In H_2O Ideal	Actual	Gas Meter Temp °F In	Out	Pump Vacuum In. Hg Gauge	Filter Box Temp °F	Imp. Exit Temp °F	Stack Temp °F
1	0	458.325	.15	1.45	1.45	56	57	8½		49	65
2	10		.15	1.45	1.45	64	57	8½		51	65
3	20		.13	1.26	1.26	68	59	7	N/A	54	66
4	30		.13	1.26	1.26	70	61	7		49	66
5	40		.12	1.16	1.16	73	63	6½		50	66
6	50		.12	1.16	1.16	75	65	6½		52	67
7	60		.14	1.36	1.36	76	67	7½		50	68
8	70		.13	1.26	1.26	80	69	7		52	68
9	80		.13	1.26	1.26	81	71	7		50	68
10	90		.15	1.45	1.45	81	72	8½		50	68
11	100		.15	1.45	1.45	81	72	8½		52	69
12	110		.15	1.45	1.45	82	73	8½		53	69
END	120	461.631									

V ___ $(\sqrt{\Delta P})^2$ ___ ΔH 1.37 T_m 69.7 T_s ___

AT

TRAVERSE SAMPLING DATA

907846

Client HYTEK
Date 5-19-89
Sample Location Cu + Lead Smelter 3/4
Operators TAG / SMW
Sample Box # Red 1
Run#

SCHEMATIC TRAVERSE LAYOUT

Stack Diameter 20"
Distance Upstream 0
Distance Downstream 0

Start Time 0709
Stop Time 0909
Barometric Pressure "Hg 30.43" 773 mm
Static Pres "H_2O → 4.9
Production Rate 1750 an-p-hr/hr

EQUIPMENT CHECKS

Initial/Final

Leak Rate Cfm .01 / ____
Leak Test Vac 15 / ____
✓ Pitots, Pretest
✓ Pitots, Postest
Orsat Sampling System
Tedlar Bag
____ Thermocouple @ ____ °F

Filter # ____ tare ____ mgs

	Final Wt.	Initial Wt.	Net Wt.
#1 Bubbler	6070	6015	____
#2 Impinger	5796	5769	____
#3 Bubbler	5355	535.5	____
#4 Silica Gel	7890	777.5	____

TOTAL WATER VOLUME ____

NOMOGRAPH SETUP

% Moisture 2
Meter Temp. 65
Stack Temp. 67
ΔH@ 1.80 Y .98
Pitot# 30 Side# A
Cp .82
Nozzle Diameter .206
K Factor 1.70
Reference ΔP ____

Sample Point	Elap Time Min.	Dry Gas Meter Reading Cu. Ft.	Pitot Reading (ΔP), In. H_2O		Orifice Setting (ΔH), In H_2O Ideal	Actual	Gas Meter Temp °F In	Out	Pump Vacuum In. Hg Gauge	Filter Box Temp °F	Imp. Exit Temp °F	Stack Temp °F	
1	0	302.312	.50		.89	.89	55	50	2½		49	63	
2	10		.55		.98	.98	64	51	2½	N/A	49	62	
3	20		.55		.98	.98	72	56	2½		48	61	
4	30		.55		.98	.98	76	60	2½		48	61	
5	40		.55		.98	.98	79	64	2½		48	60	
6	50		.80		1.42	1.42	82	67	3½		47	59	
7	60		.80		1.42	1.42	83	69	3½		47	58	
8	70		.60		1.07	1.07	84	70	3		47	56	
9	80		.60		1.07	1.07	84	71	3		48	54	
10	90		.60		1.07	1.07	84	71	3		48	54	
11	100		.40		.71	.71	83	71	2½		48	55	
12	110		.40		.71	.71	84	72	2½		48	54	
END	120	378.358											

V_m ____ $(\sqrt{\Delta P})^2$ ____ $\frac{1.023}{\Delta H}$ ____ $\frac{709}{T_m}$ ____ T_s ____

AT

907847

TRAVERSE SAMPLING DATA

Client: HYTEK
Date: 5-19-89
Sample Location: S. 3/4 outlet
Operators: JAG - JMW
Sample Box #: C
Run#: 2

EQUIPMENT CHECKS

Initial/Final

Leak Rate Cfm: 4.01 / .008
Leak Test Vac: 15 / 14
✓ / ✓ Pitots, Pretest
_____ Pitots, Postest
_____ Orsat Sampling System
N/A / N/A Tedlar Bag
_____ Thermocouple @ _____ °F

SCHEMATIC TRAVERSE LAYOUT

Stack Diameter _____
Distance Upstream _____
Distance Downstream _____

Filter # _____ tare _____ mgs

	Final Wt.	Initial Wt.	Net Wt.
#1 Bubbler	6419	6388	-
#2 Impinger	6341	6323	-
#3 Bubbler	5465	5453	-
#4 Silica Gel	8201	8084	-

TOTAL WATER VOLUME _____

Start Time: 0940
Stop Time: 1140
Barometric Pressure "Hg: 30.47"
Pressure "Hg: 774 mm
Static Pres "H_2O: -4.9
Production Rate: 1653 amp-hr/hr

NOMOGRAPH SETUP

% Moisture _____
Meter Temp. _____
Stack Temp. _____
ΔH@ _____ Y _____
Pitot# _____ Side# _____
Cp _____
Nozzle Diameter _____
K Factor _____
Reference ΔP _____

Sample Point	Elap Time Min.	Dry Gas Meter Reading Cu. Ft.	Pitot Reading (ΔP), In. H_2O	Orifice Setting (ΔH), In H_2O Ideal	Orifice Setting (ΔH), In H_2O Actual	Gas Meter Temp °F In	Gas Meter Temp °F Out	Pump Vacuum In. Hg Gauge	Filter Box Temp °F	Imp. Exit Temp °F	Stack Temp °F
1	0	378.629	.60	1.07	1.07	65	61	3½		49	62
2	10		.60	1.07	1.07	80	63	3½		50	61
3	20		.65	1.16	1.16	84	67	4	N/A	50	61
4	30		.65	1.16	1.16	88	71	4		50	60
5	40		.65	1.16	1.16	90	74	4		51	60
6	50		.60	1.07	1.07	92	77	4		52	60
7	60		.80	1.42	1.42	94	78	4½		53	59
8	70		.80	1.42	1.42	96	81	4½		52	61
9	80		.40	.71	.71	95	82	3		51	60
10	90		.40	.71	.71	93	82	3		52	61
11	100		.35	.62	.62	92	83	3		52	62
12	110		.35	.62	.62	93	83	3		53	62
Total	110	445.137									

V _____ √ΔP _____ ΔH 1.016 Tm 81.8 Ts _____

Source category: Electroplating
Plant name : Hytek Finishes Co.
Process : Hard chrome plating

Filename: REF_4-77.WQ1
Location: Kent, WA
Test date: May 18-19, 1989

Date: 04/19/96
Ref. No.: 4-77
Process rate basis: production

Source	Type of control	Pollutant	Run No.	Test Method	Samp. time, min	Isokinetic, %	Gas volume, DSCF	Volum. flow rate, DSCFM	Mass, ug	Concen., gr/DSCF	Emission rate, lb/hr	Process rate, A-hr	Emission factor mg/A-hr	Emission factor gr/A-hr	Rat.
Electroplating tank #1 & 2	none	Cr+6	1	EPA 13	120	102.0	106.18	7,991	25,648	0.0037	0.26	10,600	22	0.34	
		Cr+6	2		120	103.0	106.90	7,959	3,431	0.00050	0.034	5,778	5.3	0.082	
										0.00211	Average		14	0.21	B
	WS	Cr+6	1	EPA 13	120	98.0	71.8	13,574	69.5	1.49E-05	0.0017	10,600	0.15	0.0023	
		Cr+6	2		120	97.0	80.7	12,807	135.1	2.58E-05	0.0028	5,778	0.45	0.0069	
										2.0E-05	Average		0.30	0.0046	B
Electroplating tank #3 & 4	none	Cr+6	1	EPA 13	120	101.0	113.25	5,974	1,163	0.00016	0.0081	3,500	2.1	0.032	
		Cr+6	2		120	101.0	109.56	5,817	829.5	0.00012	0.0058	3,306	1.6	0.025	
										0.00014	Average		1.9	0.029	B
	WS	Cr+6	1	EPA 13	120	99.0	68.6	10,628	182.1	4.10E-05	0.0037	3,500	0.97	0.015	
		Cr+6	2		120	96.0	65.5	10,526	233.0	5.49E-05	0.0050	3,306	1.4	0.021	
										4.8E-05	Average		1.2	0.018	B

Basis for rating:
Problems noted:
Other notes:

Process : Chromic acid anodizing

Test date: May 18, 1989

Process rate basis: production

Source	Type of control	Pollutant	Run No.	Test Method	Samp. time, min	Isokinetic, %	Gas volume, DSCF	Volum. flow rate, DSCFM	Mass, ug	Concen., gr/DSCF	Emission rate, lb/hr	Process rate, ft2	Emission factor g/hr-ft2	Emission factor gr/hr-ft2	Rat.
Chromic acid anodizing tank	none	Cr+6	1	EPA 13	60	96	38.58	20,522	184.9	7.4E-05	0.013		ERR	ERR	
		Cr+6	2		120	95	77.42	20,650	12.37	2.5E-06	0.00044		ERR	ERR	
		Cr+6	3		60	96	39.26	20,775	83	3.3E-05	0.0058		ERR	ERR	
											Average		ERR	ERR	

Notes: Runs 1&3 with parts in bath, Run 2 with no parts in bath
Liquid surface area not in report