ENCLOSURE 2
REFERENCE B
ELECTROPLATING
REF. 4-63

WA099.01

REPORT OF HEXAVALENT CHROMIUM EMISSIONS TESTING ON THE CHROMIC ACID ANODIZING AND TRI-ACID ETCHING PROCESSES AT BUILDINGS 3 AND 5, DOUGLAS AIRCRAFT COMPANY LONG BEACH, CALIFORNIA

Note: This is a reference cited in *AP 42, Compilation of Air Pollutant Emission Factors, Volume I Stationary Point and Area Sources.* AP42 is located on the EPA web site at www.epa.gov/ttn/chief/ap42/

The file name refers to the reference number, the AP42 chapter and section. The file name "ref02_c01s02.pdf" would mean the reference is from AP42 chapter 1 section 2. The reference may be from a previous version of the section and no longer cited. The primary source should always be checked.

Prepared for:

DOUGLAS AIRCRAFT COMPANY
10833 Valley View
Cypress, California 90630

Submitted:
September 14, 1989

Prepared by:

ENGINEERING-SCIENCE, INC.
75 N. Fair Oaks Avenue
P. O. Box 7107
Pasadena, California 91109

R R Rosario
Rolando Rosario
Project Manager

Dennis Becvar
Dennis Becvar
Project Director

ENGINEERING-SCIENCE

WA099.01

REPORT OF HEXAVALENT CHROMIUM EMISSIONS TESTING ON THE CHROMIC ACID ANODIZING AND TRI-ACID ETCHING PROCESSES AT BUILDINGS 3 AND 5, DOUGLAS AIRCRAFT COMPANY LONG BEACH, CALIFORNIA

Prepared for:

DOUGLAS AIRCRAFT COMPANY
10833 Valley View
Cypress, California 90630

Submitted:
September 14, 1989

Prepared by:

ENGINEERING-SCIENCE, INC.
75 N. Fair Oaks Avenue
P. O. Box 7107
Pasadena, California 91109

R Rosario
Rolando Rosario
Project Manager

Dennis Becvar
Dennis Becvar
Project Director

Highlighted Too small

< 30 μgm

Run #	Probe (mg)	Filter (mg)	Impingers (mg)	Total	
Foam Only A	25×10^{-4}		50×10^{-4}	.0075 mg	7.5 μgm
Foam Only B	26×10^{-4}		247×10^{-4}	.0273 mg	27.3 μgm
Foam & Balls A	14×10^{-4}		32×10^{-4}	.0046 mg	4.6 μgm
Foam & Balls B	25×10^{-4}		143×10^{-4}	.0168 mg	16.8 μgm
F & A	21×10^{-4}		28×10^{-4}	.0049 mg	4.9 μgm
Uncontrolled (A)	9825×10^{-4} 8/31		11303×10^{-4}	2.1128 mg	2112.8 μgm
Uncontrolled (B)	12269×10^{-4} 8/31		14211×10^{-4}	2.6480 mg	2648.0 μgm
Balls Only (A)	7267×10^{-4}		7555×10^{-4}	1.4822 mg	1482.2 μgm
Balls Only (B)	7630×10^{-4}		6775×10^{-4}	1.4405 mg	1440.5 μgm
Foam & Anti-Mist (A)	2100×10^{-4}		1400×10^{-4}	.3500 mg	350 μgm
Foam & Anti-Mist (B)	1700×10^{-4}		170×10^{-4}	.3400 mg	340 μgm
~~Uncontrolled - 1~~	~~16×10^{-4}~~		$\times 10^{-4}$	.0032 mg	3.2 μgm
~~Ball Only - 1~~	~~20×10^{-4}~~		225×10^{-4}	.0245 mg	24.5 μgm
~~Anti-Mist - 1~~	~~44.2×10^{-4}~~		466×10^{-4}	.05102	51.02 μgm
uncontrolled	23×10^{-4}		23×10^{-4}	.0046 mg	4.6 μgm
Uncontrolled (A)	13675×10^{-4} 9/12 Test 534		16654×10^{-4}	3.0289 mg	3028.9 μgm
Uncontrolled (B)	13970×10^{-4} 9/12 Test 534		16704×10^{-4}	3.0674 × ~~10^{-4}~~ ~~228.1×10^{-6}~~	3067.4 μgm
Uncontrolled	24.6×10^{-4} 8/21		228.1×10^{-6}	.02527 mg	25.27

B

WA099.01

REPORT OF HEXAVALENT CHROMIUM EMISSIONS TESTING ON THE CHROMIC ACID ANODIZING AND TRI-ACID ETCHING PROCESSES AT BUILDINGS 3 AND 5, DOUGLAS AIRCRAFT COMPANY LONG BEACH, CALIFORNIA

Prepared for:

DOUGLAS AIRCRAFT COMPANY
10833 Valley View
Cypress, California 90630

Submitted:

September 14, 1989

Prepared by:

ENGINEERING-SCIENCE, INC.
75 N. Fair Oaks Avenue
P. O. Box 7107
Pasadena, California 91109

B

REPORT OF HEXAVALENT CHROMIUM EMISSIONS TESTING ON THE CHROMIC ACID ANODIZING AND TRI-ACID ETCHING PROCESSES AT BUILDINGS 3 AND 5, DOUGLAS AIRCRAFT COMPANY LONG BEACH, CALIFORNIA

INTRODUCTION

TEST METHODOLOGY

Engineering-Science (ES), Pasadena, California conducted chromium emissions testing on tri-acid etching and chromic acid anodizing tanks in Buildings 3 and 5 at the Douglas Aircraft Company (DAC) Facility in Long Beach, California. Building 3 were on Tank No. 370 (anodize) and Tank No. 353 (tri-etch). Figures 1 and 2 present schematic diagrams of these two sources. The tests in Building 5 were on Tank No. 534 (anodize) and Tank No. 541 (tri-etch). Figure 3 and 4 present the schematic diagram of these two sources.

The purpose of the test program was to determine the viability of three basic control measures to reduce hexavalent chromium emissions from the open tanks. The control measures involved the use of plastic spheres (Balls), Harshaw MSP-Mist-Suppressant (Anti-Mist), and Micel Inc., CHROME FOAM (Foam). Where feasible, duplicate and simultaneous testing was conducted. Such tests were designated as Run A and Run B.

DAC coordinated the test program, monitored materials usage, and determined the control measure combinations for each test. Mr. Merrill Hickman of the South Coast Air Quality Management District (SCAQMD) observed the test program on Aug. 22, 1989.

The test program was started August 21 and finished Sept. 11, 1989. A series of 4 separate tests were done. Personnel from ES actively involved in the testing were Messrs. Greg Burke, Larry Cottone, Jon Dailey, Mike Dorsey, Mike Edwards (team leader), Tony Garver (team leader), Robert Mazurek (team leader), and Rollie Rosario.

DOUGLAS AIRCRAFT COMPANY
CHROMIC ACID ANODIZING TANK #370
BLDG. 3

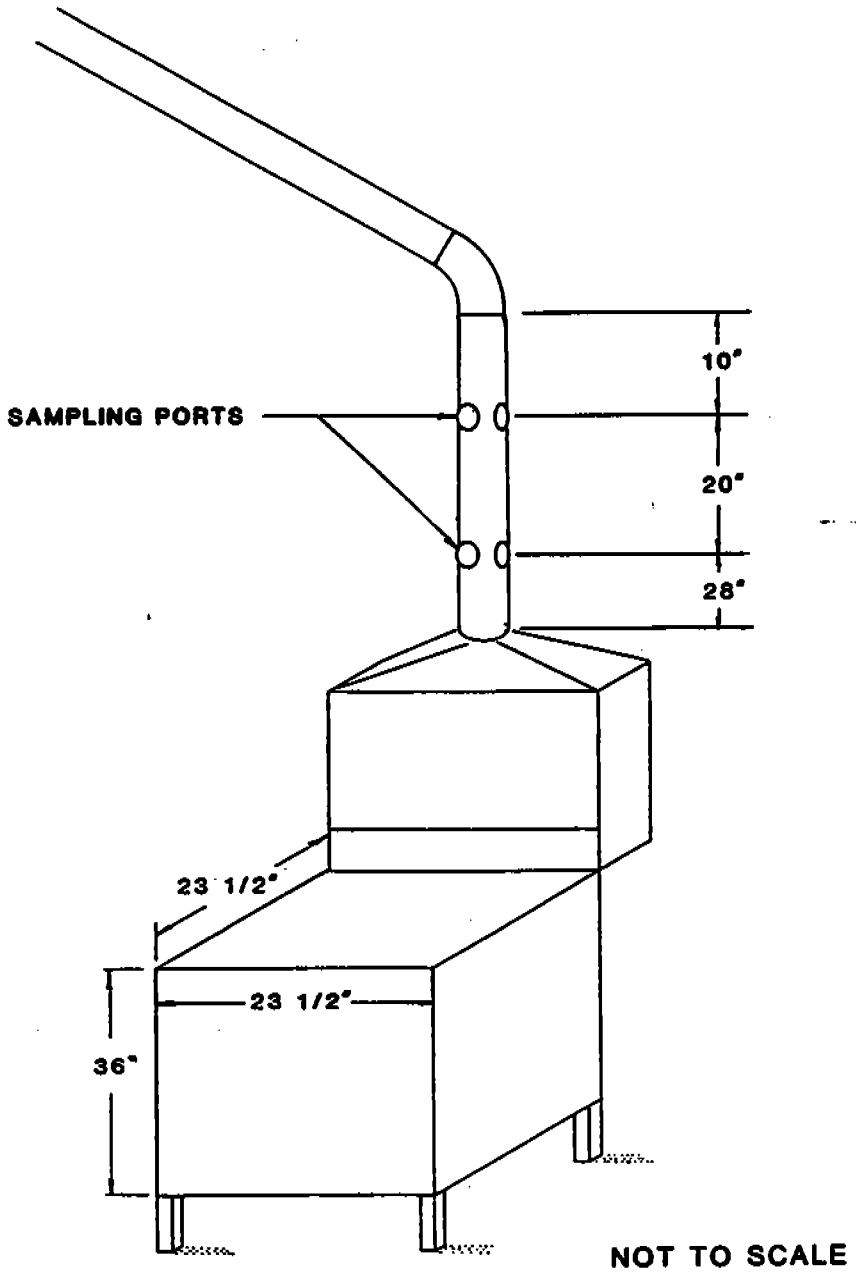

FIGURE 2

DOUGLAS AIRCRAFT COMPANY
TRI-ACID ETCH TANK #353
BLDG. 3

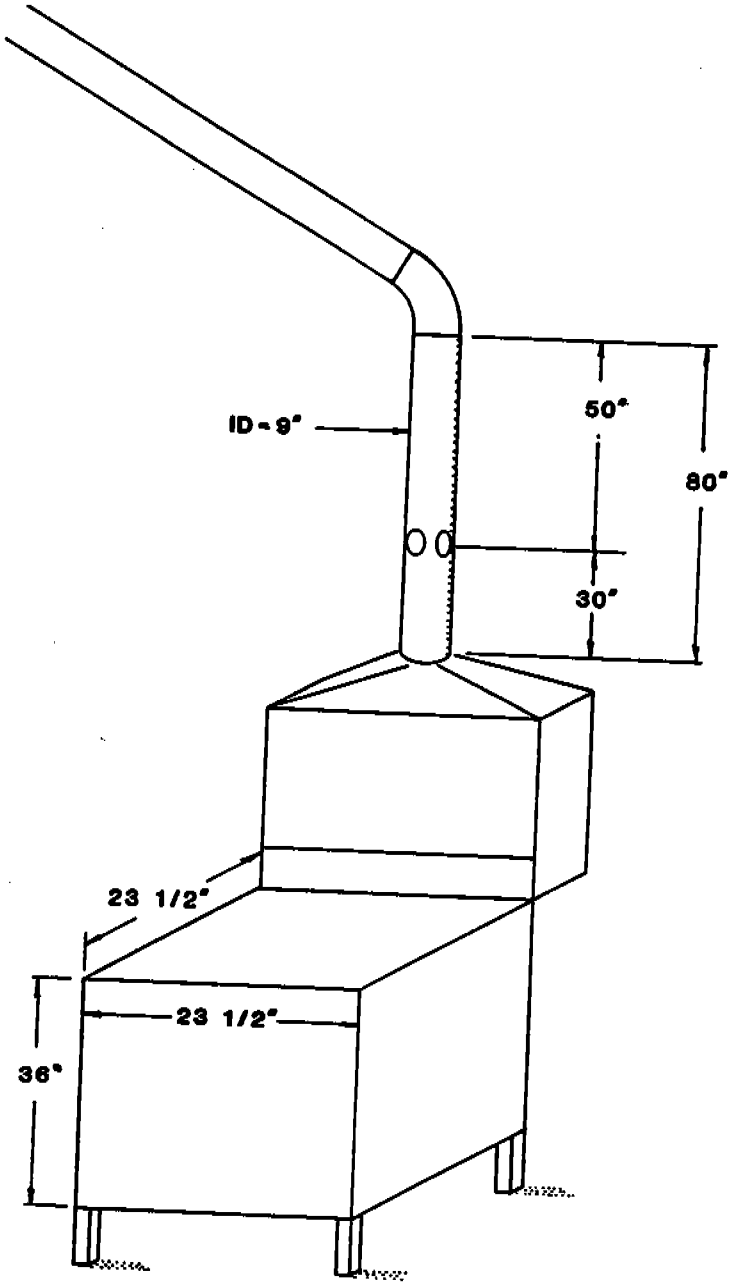

NOT TO SCALE

FIGURE 3

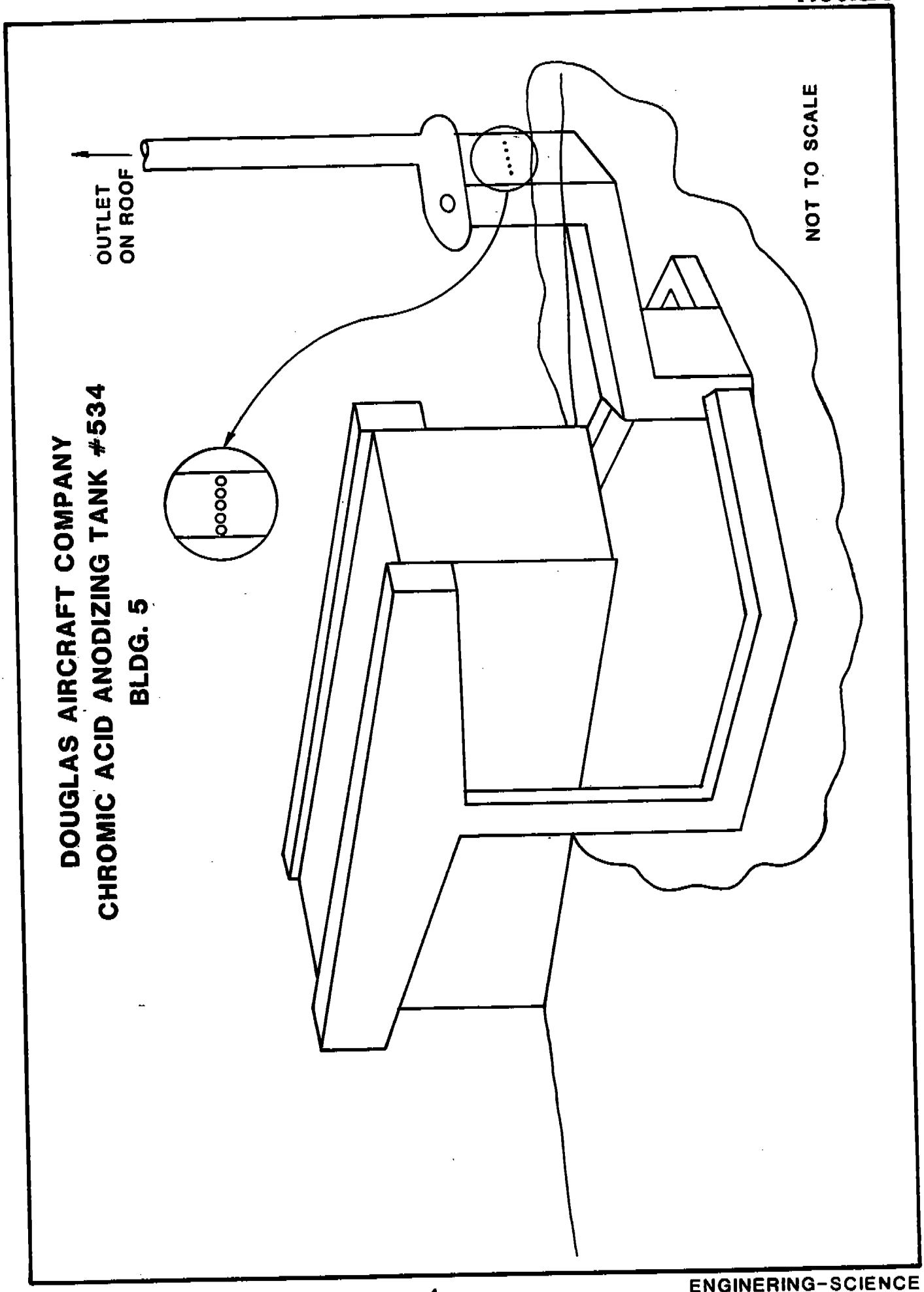
DOUGLAS AIRCRAFT COMPANY
CHROMIC ACID ANODIZING TANK #534
BLDG. 5
OUTLET
ON ROOF
NOT TO SCALE

FIGURE 4

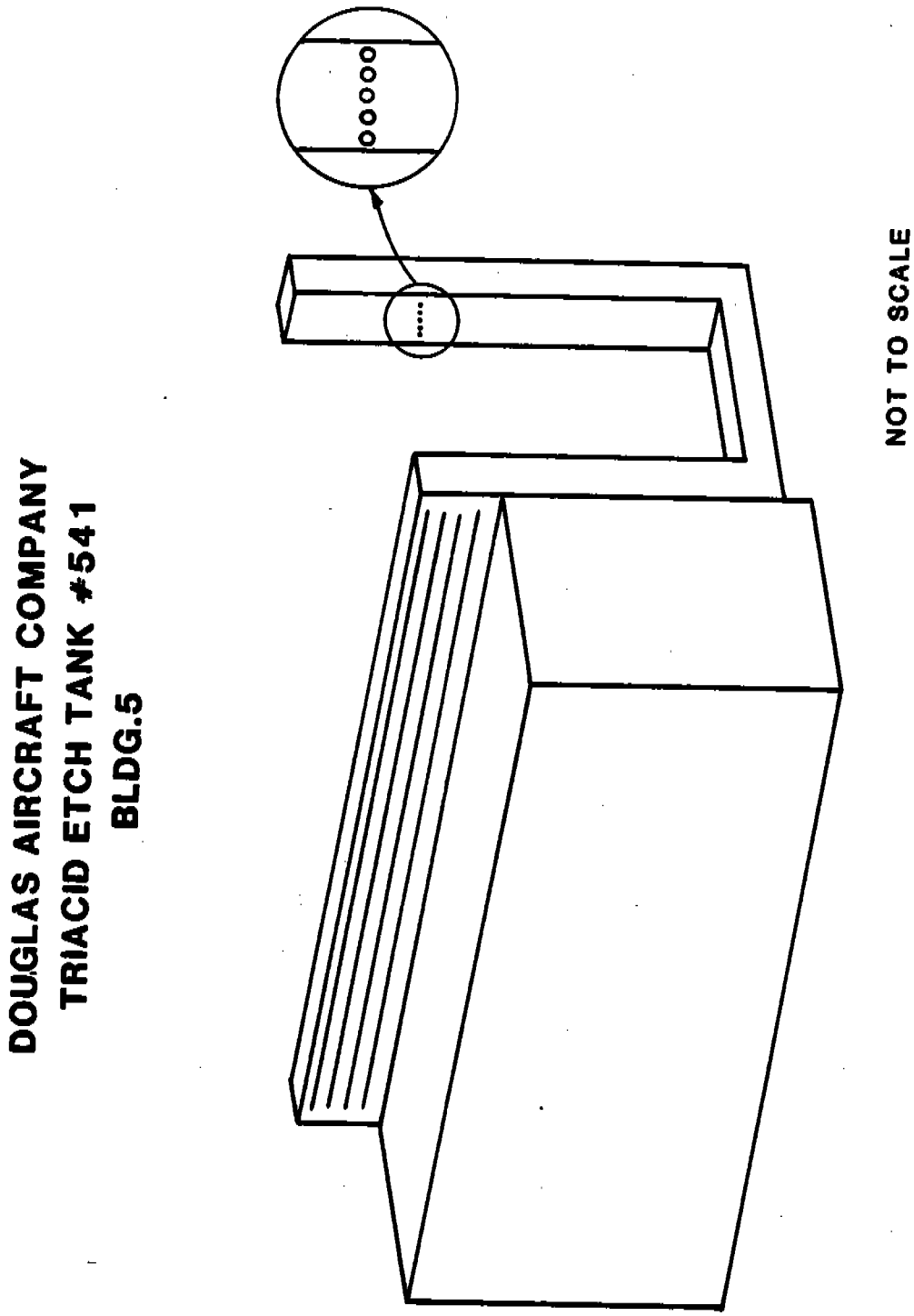
DOUGLAS AIRCRAFT COMPANY
TRIACID ETCH TANK #541
BLDG.5
NOT TO SCALE

TEST METHODOLOGY

Total Chromium and Hexavalent Chromium

The samples for total and hexavalent chromium were collected in accordance with SCAQMD Method 205, including ancillary methods 1.1, 1.2, 2.1, 2.3 and 4.1 for traverse point locations, velocity measurements and stack gas moisture determinations respectively. The sample train included a continuous 1/4" ID teflon probe liner which was connected to the wet impingement train. The teflon line was supported in the stack by a stainless steel rod. The sampling runs were conducted isokinetically.

The samples were sent to Thermo Analytical, Inc., Monrovia, California for analysis of the total chromium and hexavalent chromium. Hexavalent chromium was determined on samples extracted in an alkaline solution as per the procedures of Method 312B (Standard Methods for the Examination of Water and Wastewater, 16th Edition). The samples were read on a Perkin Elmer 124 spectrophotometer. A turnaround time of 24 hours were done on the hexavalent chromium. Total chromium was analyzed by Atomic Absorption, Spectrophotometry graphite furnace technique.

QUALITY ASSURANCE

Field Testing Quality Assurance

Prior to and at the conclusion of the field sampling, the meter box dry gas meter, and orifice were calibrated against a wet test meter. The results of the orifice calibration are expressed as the $\Delta H@$, which is the pressure drop (in inches of water) at various flow rates through the dry gas meter as specified in EPA publication APTD-0576. The dry gas meter accuracy is expressed as gamma (Y) and was determined as the ratio of the sampling train dry gas meter volume to the wet test meter volume. One pretest and three post-test field checks for the Y factor were performed to verify meter accuracy. In all cases, the field testing equipment was within the acceptable range.

Exhaust gas, dry gas meter, and impinger temperatures were monitored using a type-K thermocouple connected to an Omega Model 601 digital readout. The temperature measuring equipment was calibrated with an NBS traceable mercury in glass thermometer.

Stack velocity was determined using an S-type pitot tube attached to the probe as specified in EPA Reference Method 2. The pitot tube was measured for adherence to the dimensions as specified in Reference Method 2. A pitot tube correction factor of 0.84 was used for determining volumetric flow through the exhaust gas stack.

At the conclusion of each test run the sampling train was leak checked at a vacuum equal to the highest vacuum observed during the test runs. The sampling train was considered to be leak free with a leak rate less than 0.02 CFM.

Sample Custody

A specific Chain-of-Custody procedure was used for this project. The elements of this procedure include:

- Train component identification
- Sample identification
- Sample labels
- Documentation
- Chain of custody forms

The sequence of activities concerned with sample custody together with identification and tracking procedures are described below:

1. Sample train preparation by laboratory including filter holders, impingers, and other sampling equipment identified by tags and codes.
2. Sample train issued to test team and master log filled out. Sample I.D. number stickers issued according to test identification code
3. Train returned to recovery area when a valid sample is obtained. Sample train accompanied by all field data sheets.
4. Recovery team recovers samples using appropriate containers, affixes sample I.D. labels to sample containers, to master log, to field data sheet, and to train recovery sheet.
5. All samples returned to ES Pasadena laboratory with Chain-of-Custody form.
6. Samples transferred or shipped to appropriate laboratory with Chain-of-Custody form
7. Samples examined at each transfer point for integrity (broken containers, loss in liquid, or seal integrity).

Upon completing the required analysis, the analyst returns the Chain-of Custody form along with results to the ES project manager. All samples are accounted for by the ES laboratory supervisor and Project Manager. Each laboratory identifies samples in its own laboratory notebooks by the ES I.D. number as well as any internal identification. Notebooks are retained by each laboratory according to usual laboratory practices.

RESULTS

Tables 1 to 7 contain the results of the test program.

The "uncontrolled" chromium emissions for Tank 370 (anodize) ranged from 11.7 to 12.8 mg/amp-hr as hexavalent chromium in the two test periods (Table 1 and 2).

The control measures used, except one, yielded values less than the 0.003 mg/l level of detection (LOD) of the analytical method (M312B Standard Methods for the Examination of Water and Wastewater, 16th Edition). Calculated emissions ranged from <0.003 to <0.035 mg/amp-hr.

The exception occurred in a duplicate/simultaneous test involving Balls. A mix of hollow and solid balls were used as the control measure. An attempt to "double up" balls to completely cover the liquid surface area was unsuccessful. The liquid level rose and the hood/duct opening was contaminated with the chromic solution. Calculated emissions for this test averaged 3.4 mg/amp-hr.

During the "uncontrolled" test periods for the anodizing process, "bubbling" and a slight misty spray was visible entering the exhaust duct. Upon Foam addition, a yellow "blanket" formed when current was applied to the process tank and effectively suppressed the visible emissions. The foam covered 100 percent of the surface area of the process tank. The thickness of the foam blanket ranged from 1/8 to 1/4 of an inch.

The use of Balls presented problems of surface coverage (not enough Balls available), system contamination (liquid level rise), and handling. The Foam and Anti-Mist control measure combination yielded the best result from <0.003 to <0.017 mg/amp-hr.

The Anti-Mist additive reduced the surface tension of the process solution thereby inhibiting the formation of chromic acid mist. A measurement to determine the surface tension before and after the addition of Harshaw MSP was performed utilizing a tensiometer. The surface tension was reduced from >100 dynes/cm^2 (instrument limit, 100 dynes/cm^2) to 47.0 dynes/cm^2.

Tank No. 353 (tri-etch) data are presented in Table 3. Hexavalent chromium levels for "uncontrolled" and controlled emissions are less than the 0.003 mg/l LOD discussed above.

Tables 4 and 5 are data for Building 5 test series. Tank No. 541 (tri-etch) calculated out as <42.0 mg/hr. hexavalent chromium and 42.0 mg/hr. for total chromium. Tank No. 534 (anodize) averaged 6.4 mg/amp-hr. as hexavalent chromium and 7.5 mg/amp-hr. as total chromium.

Table 6 presents the flow data determined for the sources tested during the testing program.

Table 7 presents the amperage and percent efficiency (based on uncontrolled mg/hr emissions) for the anodize sources. Tri-etch sources efficiency numbers were not computed because there was no reduction in hexavalent chromium emissions utilizing various control measures such as Balls or Anti-Mist additive. Tank No. 541 was a single "uncontrolled" test.

It is recommended that data integrators to record ampere-hours be installed in the rectifiers supplying current to the anodize tanks to monitor exact ampere-hour usage.

TABLE 1

SUMMARY OF CHROMIUM EMISSION
BUILDING 3 TANK 370 (Anodize)

August 21 & 22, 1989

Douglas Aircraft Company
Long Beach, California

Control Measure	Hex-chromium (mg/hr)	Hex-chromium (mg/amp-hr)	Total Chromium (mg/hr)	Total Chromium (mg/amp-hr)
Uncontrolled	372.3	11.7	407.0	12.8
Foam				
Run A	<1.8	<0.035	4.1	0.079
Run B	<1.4	<0.021	14.5	0.221
Foam + Balls				
Run A	<0.9	<0.018	1.8	0.036
Run B	<1.8	<0.033	9.5	0.175
Foam + Anti-Mist	<1.4	<0.017	1.8	0.021

Notes: < are "less than values" based on 0.003 mg/l detection limit for hex-chromium, and 0.002 mg/l for total chromium. Field blank correction values of <0.003 mg/l and 0.002 mg/l for hex-chromium and total chromium respectively were applied to all calculated values.

Runs A and B are simultaneous test ±10 minutes.
Run A, top port test (see Figure 1).
Run B, bottom port test (see Figure 1).

TABLE 2

SUMMARY OF CHROMIUM EMISSION
BUILDING 3 TANK 370 (Anodize)

August 30 & 31, 1989

Douglas Aircraft Company
Long Beach, California

Control Measure	Hex-chromium mg/hr	Hex-chromium mg/amp-hr	Total Chromium mg/hr	Total Chromium mg/amp-hr
Uncontrolled				
Run A	1345	12.5	1547	14.3
Run B	1434	12.7	1661	14.7
Balls				
Run A	448	3.4	465	3.6
Run B	444	3.3	395	3.0
Foam + Anti-Mist				
Run A	<1	<0.005	<1	<0.003
Run B	<1	<0.003	<1	<0.003

Note: < are "less than values" based on 0.003 mg/l detection limit for hex-chromium, and 0.002 mg/l for total chromium. Field blank correction values of <0.003 mg/l and 0.002 mg/l for hex-chromium and total chromium respectively were applied to all calculated values.

Runs A and B are duplicate (2 nozzles, taped together) simultaneous runs, using two sampling systems.

TABLE 3

SUMMARY OF CHROMIUM EMISSION
BUILDING 3 TANK 353 (TRI-ACID ETCH)

September 7, 1989

Douglas Aircraft Company
Long Beach, California

Control Measure	Hex-chromium mg/hr	Total Chromium mg/hr
Uncontrolled	<1.4	1.4
Balls	<1.8	20.4
Anti-Mist	<0.8	20.8

Note: < are "less than values" based on 0.003 mg/l detection limit for hex-chromium, and 0.002 mg/l for total chromium. Field blank correction values of <0.003 mg/l and 0.002 mg/l for hex-chromium and total chromium respectively were applied to all calculated values.

TABLE 4

SUMMARY OF CHROMIUM EMISSION
BUILDING 5 TANK 541 (TRI-ACID ETCH)

August 31, 1989

Douglas Aircraft Company
Long Beach, California

Control Measure	Hex-chromium mg/hr	Total Chromium mg/hr
Uncontrolled	<42	42

Note: < are "less than values" based on 0.003 mg/l detection limit for hex-chromium, and 0.002 mg/l for total chromium. Field blank correction values of <0.003 mg/l and 0.002 mg/l for hex-chromium and total chromium respectively were applied to all calculated values.

TABLE 5

SUMMARY OF CHROMIUM EMISSION
BUILDING 5 TANK 534 (ANODIZE)

September 12, 1989

Douglas Aircraft Company
Long Beach, California

Control Measure	Hex-chromium (mg/hr)	Hex-chromium (mg/amp-hr)	Total Chromium (mg/hr)	Total Chromium (mg/amp-hr)
Uncontrolled				
Run A	11,704	6.2	14,161	7.4
Run B	12,417	6.5	14,752	7.7

Note: Runs A and B are simultaneous tests.

TABLE 6

SUMMARY OF GASEOUS FLOW DATA
BUILDING 3 & 5 (Tri-Etch & Anodize)

August 21 to September 12, 1989

Douglas Aircraft Company
Long Beach, California

Parameters	Building 3*		Building 5	
	Tank 370 (Anodize)	Tank 353 (Tri-Etch)	Tank 534 (Anodize)	Tank 541 (Tri-Etch)
Stack Diameter (in)	10.5	9	(40x34)	(82x34)
Stack Temp (^{o}F)	74	74	89	73
Moisture (%)	1.9	1.8	2.4	2.8
Flow				
(ft/sec)	37.7	38.2	15.4	8.6
ACFM	1,361	1,013	8,743	10,034
DSCFM	1,266	928	7,599	9,234

* Average value from test series.

TABLE 7

SUMMARY OF ANODIZE TEST
AMPERES AND % EFFICIENCY
BUILDINGS 3 AND 5

August 21 to September 12, 1989

Douglas Aircraft Company
Long Beach, California

Source (Tank #)	Control Measure	Amperes (Total)	Time (min)	% Efficiency (Hex-chromium, mg/hr)
370 8-21/22-89	Uncontrolled	31.8	64	
	Foam			
	Run A	51.8	192	>99.5
	Run B	65.6	172	>99.6
	Foam + Balls			
	Run A	50.0	192	>99.8
	Run B	54.4	181	>99.5
	Foam + Anti-Mist	83.9	192	>99.6
370 8-30/31-89	Uncontrolled		60	
	Run A	108.0		
	Run B	112.7		
	Balls	130.8	120	
	Run A			67.8
	Run B			71.5
	Foam + Anti-Mist	192.4	170	
	Run A			>99.9
	Run B			>99.9
534 9-12-89	Uncontrolled	1902	90	

APPENDIX A

COMPUTER PRINTOUTS

Table 1

890856

Engineering-Science, Pasadena, California

Plant: DAC LB BLDG #3
Source: TOP PORT #370
Date: 8/22/89
Run: FOAM ONLY (A)
Standard Temp = 60 deg F Standard Press = 29.92 in Hg

FLOW DATA

STACK DIAMETER (inches)	10.50
STACK CROSS-SECTIONAL AREA (sq feet)	0.60
BAROMETRIC PRESSURE (inches Hg)	29.20
OXYGEN CONTENT (%)	21.0
CARBON DIOXIDE CONTENT (%)	0.0
MOISTURE CONTENT (%)	1.8
STACK TEMPERATURE (deg F)	73
STACK STATIC PRESSURE (inches water)	-1.00
DRY STACK GAS MOLECULAR WEIGHT	28.84
VELOCITY PRESSURE (sq rt inches water)	0.69
PITOT TUBE CORRECTION FACTOR	0.84
VELOCITY (ft per sec)	39.60
EXHAUST GAS FLOW RATE (ACFM)	1,429
EXHAUST GAS FLOW RATE (DSCFM)	1,332

SAMPLING DATA

DRY GAS VOLUME SAMPLED (DCF)	109.746
DRY GAS VOLUME SAMPLED (DSCF)	103.038
DRY GAS METER TEMPERATURE (deg F)	93
DRY GAS METER GAMMA	1.02
AVERAGE ORIFICE PRESSURE (inches water)	1.20
TOTAL RUN TIME (min)	192
NOZZLE DIAMETER (inches)	0.210
ISOKINETIC (%)	100.7

LABORATORY DATA

MOISTURE RECOVERED (mls)	40.90
10^{-4} ~~PARTIC.~~ FROM NOZ., PROBE & WASHES (mg)	25.00
PARTICULATE FROM FILTER (mg)	0.00
10^{-4} ~~PARTICULATE~~ FROM IMPINGERS (mg)	50.00

PARTICULATE DATA

FRONT HALF	(gr/DSCF)	0.0037
	(gr/ACF)	0.0035
10^{-4}	(lb/hr)	0.04
BACK HALF	(gr/DSCF)	0.0075
	(gr/ACF)	0.0070
10^{-4}	(lb/hr)	0.09
TOTAL	~~(gr/DSCF)~~	~~0.0112~~
	~~(gr/ACF)~~	~~0.0105~~
	~~(lb/hr)~~	~~0.13~~

Foam Only (A)

890856

FROM "MASSFLO"

RUN NUMBER RUN

VOL MTR STD ?
103.038000 RUN

STACK DSCFM ?
1332.000000 RUN

FRONT 1/2 MG ?
.002500 RUN
RUN

BACK 1/2 MG ?
.005000 RUN

F GR/DSCF = 3.744274E-7
F MG/MMM = 0.000857
F LB/HR = 0.000004
F KG/HR = 0.000002

B GR/DSCF = 0.000001
B MG/MMM = 0.001714
B LB/HR = 0.000009
B KG/HR = 0.000004

hex

total

Engineering-Science, Pasadena, California

t: DAC LB BLDG #3
te: TOP PORT #370
8/22/89
FOAM ONLY (A)

ard Temp = 60 deg F Standard Press = 29.92 in Hg

FLOW DATA

STACK DIAMETER (inches)	10.50
STACK CROSS-SECTIONAL AREA (sq feet)	0.60
AROMETRIC PRESSURE (inches Hg)	29.20
XYGEN CONTENT (%)	21.0
ARBON DIOXIDE CONTENT (%)	0.0
DISTURE CONTENT (%)	1.8
TACK TEMPERATURE (deg F)	73
TACK STATIC PRESSURE (inches water)	-1.00
Y STACK GAS MOLECULAR WEIGHT	28.84
LOCITY PRESSURE (sq rt inches water)	0.69
TOT TUBE CORRECTION FACTOR	0.84
LOCITY (ft per sec)	39.60
HAUST GAS FLOW RATE (ACFM)	1,429
HAUST GAS FLOW RATE (DSCFM)	1,332

SAMPLING DATA

DRY GAS VOLUME SAMPLED (DCF)	109.746
DRY GAS VOLUME SAMPLED (DSCF)	103.038
DRY GAS METER TEMPERATURE (deg F)	93
DRY GAS METER GAMMA	1.02
AVERAGE ORIFICE PRESSURE (inches water)	1.20
TOTAL RUN TIME (min)	192
NOZZLE DIAMETER (inches)	0.210
ISOKINETIC (%)	100.7

LABORATORY DATA

MOISTURE RECOVERED (mls)	40.90
10^{-4} ~~PARTIC.~~ FROM NOZ., PROBE & WASHES (mg)	25.00
PARTICULATE FROM FILTER (mg)	0.00
10^{-4} ~~PARTICULATE~~ FROM IMPINGERS (mg)	50.00

PARTICULATE DATA

FRONT HALF	(gr/DSCF)	0.0037
	(gr/ACF)	0.0035
10^{-4}	(lb/hr)	0.04
BACK HALF	(gr/DSCF)	0.0075
	(gr/ACF)	0.0070
10^{-4}	(lb/hr)	0.09
TOTAL	~~(gr/DSCF)~~	~~0.0112~~
	~~(gr/ACF)~~	~~0.0105~~
	~~(lb/hr)~~	~~0.13~~

SUMMARY OF EMISSIONS

PLANT Douglas Aircraft (Enc 2 - Reference B) LOCATION Cypress, California

SAMPLED SOURCE

RUN	DATE	1 V_m Std.	2 DSCFM
890856 Foam Only A	22 Aug 89	103.038	1332
890857 Foam Only B	22 Aug 89	136.582	1335

FRONT HALF MILLIGRAMS HEX			
PROBE	CYCLONE	FILTER	3 TOTAL
			< .0025
			< .0026

4 TOTAL BACK HALF	5 FRONT + BACK TOTAL
.0050	
.0247	

CONCENTRATIONS

RUN	FRONT HALF Gr/DSCF	Mg/M³	Lb/Hr	Kg/Hr
Foam Only A		.000857	4.27×10^{-6}	
Foam Only B		.000672	3.36×10^{-6}	
	6	7	8	9

BACK HALF Gr/DSCF	Mg/M³	Lb/Hr	Kg/Hr
	.001714	8.55×10^{-6}	
	.006386	3.19×10^{-5}	
10	17	18	19

TOTAL Gr/DSCF	Mg/M³	Lb/Hr	Kg/Hr
20	21	22	23

Remarks:

SAMPLING SUMMARY SHEET

PLANT _____ LOCATION _____

SAMPLED SOURCE _____

Run	Date	N_p	(3) Y_m	(4) ΔH	(5) P Bar.	(6) V_m	(7) T_m	(8) V_m Std.	(9) %	(10) P_{st}	17 P_s	(18) T_s	(19) VP	(20) V_w	21 $V_{w_{gas}}$	22 %M	23 M_d

Run	(24) CO_2	(25) O_2	26 N_2	(27) CO	(28) ___	29 MW_d	30 MW	(31) C_p	(32) $\sqrt{\Delta P_s (T_s + 460)}$	(33) T_t	(34) D_n	35 V_s	(36) D_s	(37) Area	38 ACFM	(39) DSCFM	40 %I

$$V_m \text{ Std.} = Y_m \frac{17.64 \times V_m \left(P \text{ Bar.} + \frac{\Delta H}{13.6}\right)}{(T_m + 460)}$$

$$\%H = \frac{100 \times V_{w_{gas}}}{V_m \text{ Std.} + V_{w_{gas}}}$$

$$V_{w_{gas}} = 0.0471\ V_w$$

$$M_d = \frac{100 - \%H}{100}$$

$$MW_d = \%CO_2 \times .44 + (\%O_2 \times .32) + (\%CO + \%N_2) \times .28 + \left(\%\text{Other} \times \frac{\text{Mol. wt.}}{100}\right)$$

$$MW = MW_d \times M_d + 18(1 - M_d)$$

$$P_s = P \text{ Bar.} + \frac{P_{st}}{13.6}$$

$$V_s = 85.49 \times C_p \sqrt{\Delta P_s (T_s + 460)} \left[\frac{1}{P_s \times MW}\right]^{1/2}$$

$$\%I = \frac{0.09450 \times (T_s + 460) \times V_m \text{ Std.}}{V_s \times T_t \times P_s \times M_d \times A_n}$$

N_p = Total No. of Sampling points

Y_m = Meter Box Correction Factor

ΔH = Average Orfice Pressure Drop, inches H_2O

P Bar. = Barometric Pressure, Inches Hg, Absolute

V_m = Volume of Dry Gas at Meter Conditions, DCF

T_m = Average Meter Temperature, °F.

V_m Std. = Volume of Dry Gas at STP, DSCF[a]

% = Per Cent other gas removed before Dry Gas Meter

P_{st} = Static Pressure of Stack Gas, inches H_2O

P_s = Stack Gas Pressure, inches Hg.

T_s = Average Stack Temperature, °F

VP = Vapor Pressure of H_2O At Stack Temperature

V_w = Total H_2O Collected in Impingers and Silica Gel

$V_{w_{gas}}$ = Volumn of water vapor collected at STP, SCF[b]

%H = Per Cent Moisture by volume

M_d = Mole Fraction of Dry Gas

$\%CO_2$ = Volume % Dry

$\%O_2$ = Volume % Dry

$\%N_2$ = Volume % Dry

%CO = Volume % Dry

MW_d = Molecular Weight of Stack Gas Dry Basis

MW = Molecular Weight of Stack Gas, Wet Basis

C_p = Pitot Tube Coefficient

$\sqrt{\Delta P_s (T_s + 460)}$ Is determined by averaging the square root of the product of the velocity head (P_s) and the absolute stack temperature from each sampling point.

T_t = Net time of test in minutes

D_n = Sampling Nozzle Diameter, inches

A_n = Area of Nozzle opening, ft^2.

V_s = Stack Gas Velocity at Stack Conditions, Feet per second.

D_s = Diameter of Stack, inches

Area = Area of duct in ft^2

ACFM = Actual Cubic Feet per minute

DSCFM = Dry Standard Cubic Feet per minute

%I = Per Cent Isokinetic

[a] Dry Standard Cubic Feet @ 68°F, 29.92 in. Hg.

[b] Standard Conditions @ 68°F. 29.92 in. Hg.

890854

Engineering-Science, Pasadena, California

Plant: DAC LB BLDG #3
Source: TOP PORT #370
Date: 8/22/89
Run: FOAM & BALLS (A)
Standard Temp = 60 deg F Standard Press = 29.92 in Hg

FLOW DATA

STACK DIAMETER (inches)	10.50
STACK CROSS-SECTIONAL AREA (sq feet)	0.60
BAROMETRIC PRESSURE (inches Hg)	29.20
OXYGEN CONTENT (%)	21.0
CARBON DIOXIDE CONTENT (%)	0.0
MOISTURE CONTENT (%)	1.5
STACK TEMPERATURE (deg F)	70
STACK STATIC PRESSURE (inches water)	-1.00
DRY STACK GAS MOLECULAR WEIGHT	28.84
VELOCITY PRESSURE (sq rt inches water)	0.69
PITOT TUBE CORRECTION FACTOR	0.84
VELOCITY (ft per sec)	39.46
EXHAUST GAS FLOW RATE (ACFM)	1,424
EXHAUST GAS FLOW RATE (DSCFM)	1,340

SAMPLING DATA

DRY GAS VOLUME SAMPLED (DCF)	135.650
DRY GAS VOLUME SAMPLED (DSCF)	128.927
DRY GAS METER TEMPERATURE (deg F)	87
DRY GAS METER GAMMA	1.02
AVERAGE ORIFICE PRESSURE (inches water)	1.73
TOTAL RUN TIME (min)	192
NOZZLE DIAMETER (inches)	0.238
ISOKINETIC (%)	97.5

LABORATORY DATA

MOISTURE RECOVERED (mls)	40.80
10^{-4} Cr6 ~~PARTIC.~~ FROM NOZ., PROBE & WASHES (mg)	<14.00
PARTICULATE FROM FILTER (mg)	0.00
10^{-4} Cr ~~PARTICULATE~~ FROM IMPINGERS (mg)	32.00

PARTICULATE DATA

FRONT HALF	(gr/DSCF)	0.0017
	(gr/ACF)	0.0016
10^{-4} Cr6	(lb/hr)	< 0.02
BACK HALF	(gr/DSCF)	0.0038
	(gr/ACF)	0.0036
10^{-4} Cr	(lb/hr)	0.04
TOTAL	~~(gr/DSCF)~~	~~0.0055~~
	~~(gr/ACF)~~	~~0.0052~~
	~~(lb/hr)~~	~~0.06~~

890857

Engineering-Science, Pasadena, California

Plant: DAC LB BLDG #3
Source: BOTTOM PORT #370
Date: 8/22/89
Run: FOAM ONLY (B)
Standard Temp = 68 deg F Standard Press. 29.92 in Hg

FLOW DATA

STACK DIAMETER (inches)	10.50
STACK CROSS-SECTIONAL AREA (sq feet)	0.60
BAROMETRIC PRESSURE (inches Hg)	29.20
OXYGEN CONTENT (%)	21.0
CARBON DIOXIDE CONTENT (%)	0.0
MOISTURE CONTENT (%)	1.7
STACK TEMPERATURE (deg F)	72
STACK STATIC PRESSURE (inches water)	-1.00
DRY STACK GAS MOLECULAR WEIGHT	28.84
VELOCITY PRESSURE (sq rt inches water)	0.69
PITOT TUBE CORRECTION FACTOR	0.84
VELOCITY (ft per sec)	39.56
EXHAUST GAS FLOW RATE (ACFM)	1,427
EXHAUST GAS FLOW RATE (DSCFM)	1,335

SAMPLING DATA

DRY GAS VOLUME SAMPLED (DCF)	148.536
DRY GAS VOLUME SAMPLED (DSCF)	136.582
DRY GAS METER TEMPERATURE (deg F)	89
DRY GAS METER GAMMA	0.99
AVERAGE ORIFICE PRESSURE (inches water)	1.90
TOTAL RUN TIME (min)	192
NOZZLE DIAMETER (inches)	0.245
ISOKINETIC (%)	97.9

LABORATORY DATA

MOISTURE RECOVERED (mls)	51.30
10^{-4} Cr6 ~~PARTIC.~~ FROM NOZ., PROBE & WASHES (mg)	< 26.00
PARTICULATE FROM FILTER (mg)	0.00
10^{-4} Cr ~~PARTICULATE~~ FROM IMPINGERS (mg)	247.00

PARTICULATE DATA

FRONT HALF	(gr/DSCF)	0.0029
	(gr/ACF)	0.0027
10^{-4} Cr6	(lb/hr)	< 0.03
BACK HALF	(gr/DSCF)	0.0279
	(gr/ACF)	0.0261
10^{-4} Cr	(lb/hr)	0.32
TOTAL	~~(gr/DSCF)~~	~~0.0308~~
	~~(gr/ACF)~~	~~0.0288~~
	~~(lb/hr)~~	~~0.35~~

Foam Only B

KRG "ESSFLO"

Engineering-Science, Pasadena, Califo

RUN NUMBER

Plant: DAC LB BLDG #3
Source: BOTTOM PORT #370
Date: 8/22/89
Run: FOAM ONLY (B)
Standard Temp = 68 deg F Standard Pre

RUN

VOL MTR STD ?
136.5020 RUN
STACK DSCFM ?
1335.0090 RUN
FRONT 1/2 MG ?
.0026 RUN
BACK 1/2 MG ?
.0247 RUN

FIX 6
RUN

F GR/DSCF = 2.937683E-7
F MG/MMM = 0.000572
F LB/HR = 0.000003
F KG/HR = 0.000002

B GR/DSCF = 0.000383
B MG/MMM = 0.006386
B LB/HR = 0.000032
B KG/HR = 0.000014

FLOW DATA

STACK DIAMETER (inches)
STACK CROSS-SECTIONAL AREA (sq feet
BAROMETRIC PRESSURE (inches Hg)
OXYGEN CONTENT (%)
CARBON DIOXIDE CONTENT (%)
MOISTURE CONTENT (%)
STACK TEMPERATURE (deg F)
STACK STATIC PRESSURE (inches wate
DRY STACK GAS MOLECULAR WEIGHT
VELOCITY PRESSURE (sq ft inches wa
PITOT TUBE CORRECTION FACTOR
VELOCITY (ft per sec)
EXHAUST GAS FLOW RATE (ACFM)
EXHAUST GAS FLOW RATE (DSCFM)

SAMPLING DATA

DRY GAS VOLUME SAMPLED (DCF)	148.536
DRY GAS VOLUME SAMPLED (DSCF)	136.582
DRY GAS METER TEMPERATURE (deg F)	89
DRY GAS METER GAMMA	0.99
AVERAGE ORIFICE PRESSURE (inches water)	1.90
TOTAL RUN TIME (min)	192
NOZZLE DIAMETER (inches)	0.245
ISOKINETIC (%)	97.9

LABORATORY DATA

MOISTURE RECOVERED (mls)	51.30
10^{-4} Cr6 ~~PARTIC.~~ FROM NOZ., PROBE & WASHES (mg)	< 26.00
PARTICULATE FROM FILTER (mg)	0.00
10^{-4} Cr ~~PARTICULATE~~ FROM IMPINGERS (mg)	247.00

PARTICULATE DATA

FRONT HALF	(gr/DSCF)	0.0029
	(gr/ACF)	0.0027
10^{-4} Cr6	(lb/hr)	< 0.03
BACK HALF	(gr/DSCF)	0.0279
	(gr/ACF)	0.0261
10^{-4} Cr	(lb/hr)	0.32
TOTAL	~~(gr/DSCF)~~	~~0.0308~~
	~~(gr/ACF)~~	~~0.0288~~
	~~(lb/HR)~~	~~0.35~~

Foam & Balls A

890854

XROM "MASSFLO"

RUN NUMBER
RUN

VOL MTR STD ?
128.9270 RUN

STACK DSCFM ?
1340.0000 RUN

FRONT 1/2 MG ?
.0014 RUN

BACK 1/2 MG ?
.0032 RUN

FIX 6
RUN

F GR/DSCF = 1.675750E-7
F MG/MMM = 0.000383
F LB/HR = 0.000002
F KG/HR = 0.000001

B GR/DSCF = 3.830285E-7
B MG/MMM = 0.000877
B LB/HR = 0.000004
B KG/HR = 0.000002

Engineering-Science, Pasadena, California

t: DAC LB BLDG #3
te: TOP PORT #370
: 8/22/89
FOAM & BALLS (A)

lard Temp = 60 deg F Standard Press = 29.92 in Hg

FLOW DATA

STACK DIAMETER (inches)	10.50
STACK CROSS-SECTIONAL AREA (sq feet)	0.60
BAROMETRIC PRESSURE (inches Hg)	29.20
OXYGEN CONTENT (%)	21.0
CARBON DIOXIDE CONTENT (%)	0.0
MOISTURE CONTENT (%)	1.5
STACK TEMPERATURE (deg F)	70
STACK STATIC PRESSURE (inches water)	-1.00
DRY STACK GAS MOLECULAR WEIGHT	28.84
VELOCITY PRESSURE (sq rt inches water)	0.69
PITOT TUBE CORRECTION FACTOR	0.84
VELOCITY (ft per sec)	39.46
EXHAUST GAS FLOW RATE (ACFM)	1,424
EXHAUST GAS FLOW RATE (DSCFM)	1,340

SAMPLING DATA

DRY GAS VOLUME SAMPLED (DCF)	135.650
DRY GAS VOLUME SAMPLED (DSCF)	128.927
DRY GAS METER TEMPERATURE (deg F)	87
DRY GAS METER GAMMA	1.02
AVERAGE ORIFICE PRESSURE (inches water)	1.73
TOTAL RUN TIME (min)	192
NOZZLE DIAMETER (inches)	0.238
ISOKINETIC (%)	97.5

LABORATORY DATA

MOISTURE RECOVERED (mls)	40.80
10^{-4} Cr^6 ~~PARTIC.~~ FROM NOZ., PROBE & WASHES (mg)	<14.00
PARTICULATE FROM FILTER (mg)	0.00
10^{-4} Cr ~~PARTICULATE~~ FROM IMPINGERS (mg)	32.00

PARTICULATE DATA

FRONT HALF	(gr/DSCF)	0.0017
	(gr/ACF)	0.0016
10^{-4} Cr^6	(lb/hr)	< 0.02
BACK HALF	(gr/DSCF)	0.0038
	(gr/ACF)	0.0036
10^{-4} Cr	(lb/hr)	0.04
TOTAL	~~(gr/DSCF)~~	~~0.0055~~
	~~(gr/ACF)~~	~~0.0052~~
	~~(lb/hr)~~	~~0.06~~

SAMPLING SUMMARY SHEET

PLANT _____ LOCATION _____

SAMPLED SOURCE _____

Run	Date	N_p	(3) Y_m	(4) ΔH	(5) P Bar.	(6) V_m	(7) T_m	(8) V_m Std.	(9) %	(10) P_{st}	17 P_s	(18) T_s	(19) VP	(20) V_w	21 $V_{w_{gas}}$	22 %M	23 M_d

Run	(24) CO_2	(25) O_2	26 N_2	(27) CO	(28) ___	29 MW_d	30 MW	(31) C_p	(32) $\sqrt{\Delta P_s (T_s + 460)}$	(33) T_t	(34) D_n	35 V_s	(36) D_s	(37) Area	38 ACFM	(39) DSCFM	40 %I

$$V_m \text{ Std.} = Y_m \frac{17.64 \times V_m \left(P \text{ Bar.} + \frac{\Delta H}{13.6}\right)}{(T_m + 460)}$$

$$\%M = \frac{100 \times V_{w_{gas}}}{V_m \text{ Std.} + V_{w_{gas}}}$$

$$V_{w_{gas}} = 0.0471\ V_w$$

$$M_d = \frac{100 - \%M}{100}$$

$$MW_d = \%CO_2 \times .44 + (\%O_2 \times .32) + (\%CO + \%N_2) \times .28 + \left(\%\text{Other} \times \frac{\text{Mol. wt.}}{100}\right)$$

$$MW = MW_d \times M_d + 18(1 - M_d)$$

$$P_s = P \text{ Bar.} \pm \frac{P_{st}}{13.6}$$

$$V_s = 85.49 \times C_p \sqrt{\Delta P_s (T_s + 460)} \left[\frac{1}{P_s \times MW}\right]^{1/2}$$

$$\%I = \frac{0.09450 \times (T_s + 460) \times V_m \text{ Std.}}{V_s \times T_t \times P_s \times M_d \times A_n}$$

M_p = Total No. of Sampling points

Y_m = Meter Box Correction Factor

ΔH = Average Orfice Pressure Drop, inches H_2O

P Bar. = Barometric Pressure, inches Hg, Absolute

V_m = Volume of Dry Gas at Meter Conditions, DCF

T_m = Average Meter Temperature, °F.

V_m Std. = Volume of Dry Gas at STP, DSCF[a]

I = Per Cent other gas removed before Dry Gas Meter

P_{st} = Static Pressure of Stack Gas, inches H_2O

P_s = Stack Gas Pressure, inches Hg.

T_s = Average Stack Temperature, °F

VP = Vapor Pressure of H_2O At Stack Temperature

V_w = Total H_2O Collected in Impingers and Silica Gel

$V_{w_{gas}}$ = Volume of water vapor collected at STP, SCF[b]

%M = Per Cent Moisture by volume

M_d = Mole Fraction of Dry Gas

$\%CO_2$ = Volume % Dry

$\%O_2$ = Volume % Dry

$\%N_2$ = Volume % Dry

%CO = Volume % Dry

MW_d = Molecular Weight of Stack Gas Dry Basis

MW = Molecular Weight of Stack Gas, Wet Basis

C_p = Pitot Tube Coefficient

$\sqrt{\Delta P (T_s + 460)}$ Is determined by averaging the square root of the product of the velocity head (P_s) and the absolute stack temperature from each sampling point.

T_t = Net time of test in minutes

D_n = Sampling Nozzle Diameter, inches

A_n = Area of Nozzle opening, ft^2.

V_s = Stack Gas Velocity at Stack Conditions, Feet per second.

D_s = Diameter of Stack, inches

Area = Area of duct in ft^2

ACFM = Actual Cubic Feet per minute

DSCFM = Dry Standard Cubic Feet per minute

%I = Per Cent Isokinetic

[a]Dry Standard Cubic Feet @ 68°F, 29.92 in. Hg.

[b]Standard Conditions @ 68°F. 29.92 in. Hg.

SUMMARY OF EMISSIONS

PLANT Douglas Aircraft (End 2 Ref B) LOCATION Cypress, Calif

SAMPLED SOURCE Anodizing & Etching @ Bldgs 3 & 5, Long Beach, California

	RUN	DATE	1 V_m Std.	2 DSCFM	FRONT HALF MILLIGRAMS PROBE	CYCLONE	FILTER	HEX 3 ~~TOTAL~~	Total 4 ~~BACK HALF~~	5 FRONT + BACK TOTAL
890854	Foam & Balls A	22AUG89	128.927	1340			<	.0014	.0032	
890855	Foam & Balls B	22Aug89	118.785	1339			<	.0025	.0143	

TOTAL CONCENTRATIONS

RUN	HEX FRONT HALF Gr/DSCF	Mg/M^3	Lb/Hr	Kg/Hr	BACK HALF Gr/DSCF	Mg/M^3	Lb/Hr	Kg/Hr	TOTAL Gr/DSCF	Mg/M^3	Lb/Hr	Kg/Hr
Foam & Balls A	~~1.92x10^{-6}~~	.000383	1.92×10^{-6}			.000877	4.40×10^{-6}					
		.000743	~~3.37x10~~ ~~4.1~~			.00425	2.13×10^{-5}					
			3.73×10^{-6}									
	6	7	8	9	10	17	18	19	20	21	22	23

Remarks:

1 ①

890858

Engineering-Science, Pasadena, California

Plant: DAC LB BLDG #3
Source: FOAM & ANTI-MIST #370
Date: 8/22/89
Run: F & A (A)
Standard Temp = 60 deg F Standard Press = 29.92 in Hg

FLOW DATA

STACK DIAMETER (inches)	10.50
STACK CROSS-SECTIONAL AREA (sq feet)	0.60
BAROMETRIC PRESSURE (inches Hg)	29.20
OXYGEN CONTENT (%)	21.0
CARBON DIOXIDE CONTENT (%)	0.0
MOISTURE CONTENT (%)	2.0
STACK TEMPERATURE (deg F)	69
STACK STATIC PRESSURE (inches water)	-1.00
DRY STACK GAS MOLECULAR WEIGHT	28.84
VELOCITY PRESSURE (sq rt inches water)	0.69
PITOT TUBE CORRECTION FACTOR	0.84
VELOCITY (ft per sec)	39.46
EXHAUST GAS FLOW RATE (ACFM)	1,424
EXHAUST GAS FLOW RATE (DSCFM)	1,335

SAMPLING DATA

DRY GAS VOLUME SAMPLED (DCF)	136.877
DRY GAS VOLUME SAMPLED (DSCF)	125.067
DRY GAS METER TEMPERATURE (deg F)	92
DRY GAS METER GAMMA	0.99
AVERAGE ORIFICE PRESSURE (inches water)	1.55
TOTAL RUN TIME (min)	192
NOZZLE DIAMETER (inches)	0.234
ISOKINETIC (%)	98.2

LABORATORY DATA

MOISTURE RECOVERED (mls)	54.30
10^{-4} cr ~~PARTIC.~~ FROM NOZ., PROBE & WASHES (mg)	<21.00
PARTICULATE FROM FILTER (mg)	0.00
10^{-4} cr ~~PARTICULATE~~ FROM IMPINGERS (mg)	28.00

PARTICULATE DATA

FRONT HALF	(gr/DSCF)	0.0026
	(gr/ACF)	0.0024
10^{-4} cr	(lb/hr)	<0.03
BACK HALF	(gr/DSCF)	0.0035
	(gr/ACF)	0.0032
10^{-4} cr	(lb/hr)	0.04
TOTAL	~~(gr/DSCF)~~	~~0.0060~~
	~~(gr/ACF)~~	~~0.0057~~
	~~(lb/hr)~~	~~0.07~~

8948 JJ/61

Engineering-Science, Pasadena, California

Plant: DAC LB BLDG #3
Source: BOTTOM PORT #370
Date: 8/22/89
Run: FOAM & BALLS (B)
Standard Temp = 60 deg F Standard Press = 29.92 in Hg

FLOW DATA

STACK DIAMETER (inches)	10.50
STACK CROSS-SECTIONAL AREA (sq feet)	0.60
BAROMETRIC PRESSURE (inches Hg)	29.20
OXYGEN CONTENT (%)	21.0
CARBON DIOXIDE CONTENT (%)	0.0
MOISTURE CONTENT (%)	1.7
STACK TEMPERATURE (deg F)	69
STACK STATIC PRESSURE (inches water)	-1.00
DRY STACK GAS MOLECULAR WEIGHT	28.84
VELOCITY PRESSURE (sq rt inches water)	0.69
PITOT TUBE CORRECTION FACTOR	0.84
VELOCITY (ft per sec)	39.44
EXHAUST GAS FLOW RATE (ACFM)	1,423
EXHAUST GAS FLOW RATE (DSCFM)	1,339

SAMPLING DATA

DRY GAS VOLUME SAMPLED (DCF)	127.802
DRY GAS VOLUME SAMPLED (DSCF)	118.785
DRY GAS METER TEMPERATURE (deg F)	83
DRY GAS METER GAMMA	0.99
AVERAGE ORIFICE PRESSURE (inches water)	1.80
TOTAL RUN TIME (min)	192
NOZZLE DIAMETER (inches)	0.234
ISOKINETIC (%)	93.0

LABORATORY DATA

	MOISTURE RECOVERED (mls)	43.50
10^{-4} Cr6	~~PARTIC.~~ FROM NOZ., PROBE & WASHES (mg)	< 25.00
	PARTICULATE FROM FILTER (mg)	0.00
10^{-4} Cr	~~PARTICULATE~~ FROM IMPINGERS (mg)	143.00

PARTICULATE DATA

FRONT HALF	(gr/DSCF)	0.0032
	(gr/ACF)	0.0031
10^{-4} Cr6	(lb/hr)	< 0.04
BACK HALF	(gr/DSCF)	0.0186
	(gr/ACF)	0.0175
10^{-4} Cr	(lb/hr)	0.21
TOTAL	~~(gr/DSCF)~~	~~0.0218~~
	~~(gr/ACF)~~	~~0.0205~~
	~~(lb/hr)~~	~~0.25~~

Foam & Balls B

55/61

CLX
XROM "MOSSFLO"

Engineering-Science,

Plant: DAC LB BLDG
Source: BOTTOM PORT
Date: 8/22/89
Run: FOAM & BALL
Standard Temp = 60 deg F

RUN NUMBER RUN

VOL MTR STD ?
118.785 RUN

STACK DSCFM ?
1339.00 RUN

FRONT 1/2 MG ?
.0025 RUN

BACK 1/2 MG ?
.0143 RUN

29.92 in Hg

STACK DIAMETER (inc		10.50
STACK CROSS-SECTION		0.60
BAROMETRIC PRESSURI		29.20
OXYGEN CONTENT (%)		21.0
CARBON DIOXIDE CON		0.0
MOISTURE CONTENT (		1.7
STACK TEMPERATURE		69
STACK STATIC PRESS		-1.00
DRY STACK GAS MOLE		28.84
VELOCITY PRESSURE		0.69
PITOT TUBE CORREC		0.84
VELOCITY (ft per s		39.44
EXHAUST GAS FLOW		1,423
EXHAUST GAS FLOW		1,339

F GR/DSCF = 3.25E-7
F MG/MMM = 7.43E-4
F LB/HR = 3.73E-6
F KG/HR = 1.69E-6

B GR/DSCF = 1.86E-6
B MG/MMM = 4.25E-3
B LB/HR = 2.13E-5
B KG/HR = 9.67E-6

SAMPLING DATA

DRY GAS VOLUME SAMPLED (DCF)	127.802
DRY GAS VOLUME SAMPLED (DSCF)	118.785
DRY GAS METER TEMPERATURE (deg F)	83
DRY GAS METER GAMMA	0.99
AVERAGE ORIFICE PRESSURE (inches water)	1.80
TOTAL RUN TIME (min)	192
NOZZLE DIAMETER (inches)	0.234
ISOKINETIC (%)	93.0

LABORATORY DATA

	MOISTURE RECOVERED (mls)	43.50
10^{-4} Cr6	~~PARTIC.~~ FROM NOZ., PROBE & WASHES (mg)	< 25.00
	PARTICULATE FROM FILTER (mg)	0.00
10^{-4} Cr	~~PARTICULATE~~ FROM IMPINGERS (mg)	143.00

PARTICULATE DATA

FRONT HALF	(gr/DSCF)	0.0032
	(gr/ACF)	0.0031
10^{-4} Cr6	(lb/hr)	< 0.04
BACK HALF	(gr/DSCF)	0.0186
	(gr/ACF)	0.0175
10^{-4} Cr	(lb/hr)	0.21
TOTAL	~~(gr/DSCF)~~	~~0.0218~~
	~~(gr/ACF)~~	~~0.0205~~
	~~(lb/hr)~~	~~0.25~~

Foam & Anti Mist
H 320

890858

XROM "MASSFLO"

RUN NUMBER
RUN

VOL MTR STD ?
125.067000 RUN
STACK DSCFM ?
1335.000000 RUN
FRONT 1/2 MG ?
.002100 RUN
BACK 1/2 MG ?
.002800 RUN

F GR/DSCF = 2.591204E-7
FIX 6
RUN
F MG/MMM = 0.000593
F LB/HR = 0.000003
F KG/HR = 0.000001

B GR/DSCF = 3.454938E-7
B MG/MMM = 0.000791
B LB/HR = 0.000004
B KG/HR = 0.000002

nce, Pasadena, California

LDG R3
NTI-MIST R370

g F Standard Press = 29.92 in Hg

FLOW DATA

nches)	10.50
IONAL AREA (sq feet)	0.60
URE (inches Hg)	29.20
%)	21.0
ONTENT (%)	0.0
(%)	2.0
E (deg F)	69
SSURE (inches water)	-1.00
LECULAR WEIGHT	28.84
E (sq rt inches water)	0.69
CTION FACTOR	0.84
sec)	39.46
RATE (ACFM)	1,424
RATE (DSCFM)	1,335

SAMPLING DATA

DRY GAS VOLUME SAMPLED (DCF)	136.877
DRY GAS VOLUME SAMPLED (DSCF)	125.067
DRY GAS METER TEMPERATURE (deg F)	92
DRY GAS METER GAMMA	0.99
AVERAGE ORIFICE PRESSURE (inches water)	1.55
TOTAL RUN TIME (min)	192
NOZZLE DIAMETER (inches)	0.234
ISOKINETIC (%)	98.2

LABORATORY DATA

MOISTURE RECOVERED (mls)	54.30
10^{-4} Cr6 ~~PARTIC.~~ FROM NOZ., PROBE & WASHES (mg)	< 21.00
PARTICULATE FROM FILTER (mg)	0.00
10^{-4} Cr ~~PARTICULATE~~ FROM IMPINGERS (mg)	28.00

PARTICULATE DATA

FRONT HALF	(gr/DSCF)	0.0026
	(gr/ACF)	0.0024
10^{-4} Cr6	(lb/hr)	< 0.03
BACK HALF	(gr/DSCF)	0.0035
	(gr/ACF)	0.0032
10^{-4} Cr	(lb/hr)	0.04
TOTAL	~~(gr/DSCF)~~	~~0.0060~~
	~~(gr/ACF)~~	~~0.0057~~
	~~(lb/hr)~~	~~0.07~~

SUMMARY OF EMISSIONS

PLANT Douglas Aircraft (Enclosure 2, Reference B) LOCATION Cypress, California

SAMPLED SOURCE Anodizing & Etching at Bldgs 385, Long Beach, California

	RUN	DATE	1 V_m Std.	2 DSCFM	FRONT HALF MILLIGRAMS PROBE	CYCLONE	FILTER	Hex 3 ~~TOTAL~~	Total 4 ~~BACK HALF~~	5 FRONT + BACK TOTAL
890858	Foam & Anti Mist H 320	22Aug89	125.067	1335			<	.0021	.0028	
890 8107	Unantol A	31Aug89	51.278	1170				.9825	1.1303	

CONCENTRATIONS

RUN	FRONT HALF Gr/DSCF	Mg/M^3	Lb/Hr	Kg/Hr	BACK HALF Gr/DSCF	Mg/M^3	Lb/Hr	Kg/Hr	TOTAL Gr/DSCF	Mg/M^3	Lb/Hr	Kg/Hr
		.000593	2.97×10^{-6}			.000791	3.95×10^{-6}					
		.6768	2.97×10^{-3}			.7784	3.41×10^{-3}					
	6	7	8	9	10	17	18	19	20	21	22	23

Remarks:

SAMPLING SUMMARY SHEET

PLANT _____ LOCATION _____

SAMPLED SOURCE _____

Run	Date	N_p	(3) Y_m	(4) ΔH	(5) P Bar.	(6) V_m	(7) T_m	(8) V_m Std.	(9) %	(10) P_{st}	17 P_s	(18) T_s	(19) VP	(20) V_w	21 $V_{w_{gas}}$	22 %M	23 M_d

Run	(24) CO_2	(25) O_2	26 N_2	(27) CO	(28) ___	29 MW_d	30 MW	(31) C_p	(32) $\sqrt{\Delta P_s (T_s + 460)}$	(33) T_t	(34) D_n	35 V_s	(36) D_s	(37) Area	38 ACFM	(39) DSCFM	40 %I

$$V_m \text{ Std.} = Y_m \frac{17.64 \times V_m \left(P \text{ Bar.} + \frac{\Delta H}{13.6}\right)}{(T_m + 460)}$$

$$\%M = \frac{100 \times V_{w_{gas}}}{V_m \text{ Std.} + V_{w_{gas}}}$$

$$V_{w_{gas}} = 0.0471\ V_w$$

$$M_d = \frac{100 - \%M}{100}$$

$$MW_d = \%CO_2 \times .44 + (\%O_2 \times .32) + (\%CO + \%N_2) \times .28 + \left(\%\text{Other} \times \frac{\text{Mol. wt.}}{100}\right)$$

$$MW = MW_d \times M_d + 18(1 - M_d)$$

$$P_s = P \text{ Bar.} \pm \frac{P_{st}}{13.6}$$

$$V_s = 85.49 \times C_p \sqrt{\Delta P_s (T_s + 460)} \left[\frac{1}{P_s \times MW}\right]^{1/2}$$

$$\%I = \frac{0.09450 \times (T_s + 460) \times V_m \text{ Std.}}{V_s \times T_t \times P_s \times M_d \times A_n}$$

N_p = Total No. of Sampling points

Y_m = Meter Box Correction Factor

ΔH = Average Orfice Pressure Drop, Inches H_2O

P Bar. = Barometric Pressure, Inches Hg, Absolute

V_m = Volume of Dry Gas at Meter Conditions, DCF

T_m = Average Meter Temperature, °F.

V_m Std. = Volume of Dry Gas at STP. DSCF[a]

% = Per Cent other gas removed before Dry Gas Meter

P_{st} = Static Pressure of Stack Gas, Inches H_2O

P_s = Stack Gas Pressure, Inches Hg.

T_s = Average Stack Temperature, °F

VP = Vapor Pressure of H_2O At Stack Temperature

V_w = Total H_2O Collected in Impingers and Silica Gel

$V_{w_{gas}}$ = Volumn of water vapor collected at STP, SCF[b]

%M = Per Cent Moisture by volume

M_d = Mole Fraction of Dry Gas

$\%CO_2$ = Volume % Dry

$\%O_2$ = Volume % Dry

$\%N_2$ = Volume % Dry

%CO = Volume % Dry

MW_d = Molecular Weight of Stack Gas Dry Basis

MW = Molecular Weight of Stack Gas, Wet Basis

C_p = Pitot Tube Coefficient

$\sqrt{\Delta P_s (T_s + 460)}$ Is determined by averaging the square root of the product of the velocity head (P_s) and the absolute stack temperature from each sampling point.

T_t = Net time of test in minutes

D_n = Sampling Nozzle Diameter, inches

A_n = Area of Nozzle opening, ft^2.

V_s = Stack Gas Velocity at Stack Conditions, Feet per second.

D_s = Diameter of Stack, Inches

Area = Area of duct in ft^2

ACFM = Actual Cubic Feet per minute

DSCFM = Dry Standard Cubic Feet per minute

%I = Per Cent Isokinetic

[a] Dry Standard Cubic Feet @ 68°F, 29.92 in. Hg.

[b] Standard Conditions @ 68°F. 29.92 in. Hg.

(2)

8908 108

Engineering-Science, Pasadena, California

Plant: DAC LB BLDG #3
Source: TANK #370
Date: 8/31/89
Run: UNCONTROLLED (B)
Standard Temp = 60 deg F Standard Press = 29.92 in Hg

FLOW DATA

STACK DIAMETER (inches)	10.50
STACK CROSS-SECTIONAL AREA (sq feet)	0.60
BAROMETRIC PRESSURE (inches Hg)	29.10
OXYGEN CONTENT (%)	21.0
CARBON DIOXIDE CONTENT (%)	0.0
MOISTURE CONTENT (%)	1.7
STACK TEMPERATURE (deg F)	73
STACK STATIC PRESSURE (inches water)	-1.10
DRY STACK GAS MOLECULAR WEIGHT	28.84
VELOCITY PRESSURE (sq rt inches water)	0.61
PITOT TUBE CORRECTION FACTOR	0.84
VELOCITY (ft per sec)	35.07
EXHAUST GAS FLOW RATE (ACFM)	1,265
EXHAUST GAS FLOW RATE (DSCFM)	1,177

SAMPLING DATA

DRY GAS VOLUME SAMPLED (DCF)	64.938
DRY GAS VOLUME SAMPLED (DSCF)	60.435
DRY GAS METER TEMPERATURE (deg F)	94
DRY GAS METER GAMMA	1.01
AVERAGE ORIFICE PRESSURE (inches water)	3.70
TOTAL RUN TIME (min)	60
NOZZLE DIAMETER (inches)	0.314
ISOKINETIC (%)	95.7

LABORATORY DATA

MOISTURE RECOVERED (mls)	22.30
10^{-4} Cr ~~PARTIC.~~ FROM NOZ., PROBE & WASHES (mg)	12269.00
PARTICULATE FROM FILTER (mg)	0.00
10^{-4} Cr ~~PARTICULATE~~ FROM IMPINGERS (mg)	14211.00

PARTICULATE DATA

FRONT HALF	(gr/DSCF)	3.1325
	(gr/ACF)	2.9140
10^{-4} Cr	(lb/hr)	31.61
BACK HALF	(gr/DSCF)	3.6283
	(gr/ACF)	3.3753
10^{-4} Cr	(lb/hr)	36.61
TOTAL	~~(gr/DSCF)~~	~~6.7608~~
	~~(gr/ACF)~~	~~6.2894~~
	~~(lb/hr)~~	~~68.22~~

Table 2

8908107

Engineering-Science, Pasadena, California

Plant: DAC LB SEDI #3
Source: TANK #370
Date: 8/31/89
Run: UNCONTROLLED (A)
Standard Temp = 60 deg F Standard Press = 29.92 in Hg

FLOW DATA

STACK DIAMETER (inches)	10.50
STACK CROSS-SECTIONAL AREA (sq feet)	0.60
BAROMETRIC PRESSURE (inches Hg)	29.10
OXYGEN CONTENT (%)	21.0
CARBON DIOXIDE CONTENT (%)	0.0
MOISTURE CONTENT (%)	2.4
STACK TEMPERATURE (deg F)	73
STACK STATIC PRESSURE (inches water)	-1.10
DRY STACK GAS MOLECULAR WEIGHT	28.84
VELOCITY PRESSURE (sq rt inches water)	0.61
PITOT TUBE CORRECTION FACTOR	0.84
VELOCITY (ft per sec)	35.11
EXHAUST GAS FLOW RATE (ACFM)	1,267
EXHAUST GAS FLOW RATE (DSCFM)	1,170

SAMPLING DATA

DRY GAS VOLUME SAMPLED (DCF)	55.031
DRY GAS VOLUME SAMPLED (DSCF)	51.278
DRY GAS METER TEMPERATURE (deg F)	81
DRY GAS METER GAMMA	0.99
AVERAGE ORIFICE PRESSURE (inches water)	2.70
TOTAL RUN TIME (min)	60
NOZZLE DIAMETER (inches)	0.289
ISOKINETIC (%)	96.4

LABORATORY DATA

MOISTURE RECOVERED (mls)	27.40
10^{-4} Cr6 ~~PARTIC.~~ FROM NOZ., PROBE & WASHES (mg)	9825.00
PARTICULATE FROM FILTER (mg)	0.00
10^{-4} Cr ~~PARTICULATE~~ FROM IMPINGERS (mg)	11303.00

PARTICULATE DATA

FRONT HALF	(gr/DSCF)	2.9564
	(gr/ACF)	2.7296
10^{-4} Cr6	(lb/hr)	29.65
BACK HALF	(gr/DSCF)	3.4012
	(gr/ACF)	3.1402
10^{-4} Cr	(lb/hr)	34.11
TOTAL	~~(gr/DSCF)~~	~~6.3576~~
	~~(gr/ACF)~~	~~5.8699~~
	~~(lb/hr)~~	~~63.76~~

(2)

Uncontrol B

8908 108

FROM "MASSFLO

Engineering-Scienc

RUN NUMBER

RUN

Plant: DAC LB BLD
Source: TANK R370
Date: 8/31/89
Run: UNCONTROLL
Standard Temp = 60 deg

VOL MTR STD ?
60.435 RUN
STACK DSCFM ?
1177.00 RUN
FRONT 1/2 MG ?
1.4211 RUN
BACK 1/2 MG ?
1.2269 RUN

29.92 in Hg

STACK DIAMETER (i		10.50
STACK CROSS-SECTI	F GR/DSCF = 3.63E-4	0.60
BAROMETRIC PRESSU	F MG/MMM = 0.83	29.10
OXYGEN CONTENT (%	F LB/HR = 3.66E-3	21.0
CARBON DIOXIDE CO	F KG/HR = 1.66E-3	0.0
MOISTURE CONTENT		1.7
STACK TEMPERATURE	B GR/DSCF = 3.13E-4	73
STACK STATIC PRES	B MG/MMM = 0.72	-1.10
DRY STACK GAS MOL	B LB/HR = 3.16E-3	28.84
VELOCITY PRESSURE	B KG/HR = 1.43E-3	0.61
PITOT TUBE CORREL		0.84
VELOCITY (ft per sec)		35.07
EXHAUST GAS FLOW RATE (ACFM)		1,265
EXHAUST GAS FLOW RATE (DSCFM)		1,177

SAMPLING DATA

DRY GAS VOLUME SAMPLED (DCF)	64.938
DRY GAS VOLUME SAMPLED (DSCF)	60.435
DRY GAS METER TEMPERATURE (deg F)	94
DRY GAS METER GAMMA	1.01
AVERAGE ORIFICE PRESSURE (inches water)	3.70
TOTAL RUN TIME (min)	60
NOZZLE DIAMETER (inches)	0.314
ISOKINETIC (%)	95.7

LABORATORY DATA

MOISTURE RECOVERED (mls)	22.30
10^{-4} Cr ~~PARTIC.~~ FROM NOZ., PROBE & WASHES (mg)	12269.00
PARTICULATE FROM FILTER (mg)	0.00
10^{-4} Cr ~~PARTICULATE~~ FROM IMPINGERS (mg)	14211.00

PARTICULATE DATA

FRONT HALF	(gr/DSCF)	3.1325
	(gr/ACF)	2.9140
10^{-4} Cr	(lb/hr)	31.61
BACK HALF	(gr/DSCF)	3.6283
	(gr/ACF)	3.3753
10^{-4} Cr	(lb/hr)	36.61
TOTAL	~~(gr/DSCF)~~	~~6.7608~~
	~~(gr/ACF)~~	~~6.2894~~
	~~(lb/hr)~~	~~68.22~~

Table 2

Uncontrolled A

8908107

KROM "MASSFLO"

RUN NUMBER RUN

Pasadena, California

Pl
Sou
Dat
Rur
Sta

N3

VOL MTR STD ?
51.2780 RUN

STACK DSCFM ?
1170.0000 RUN

FRONT 1/2 MG ?
.9828 RUN

BACK 1/2 MG ?
1.1303 RUN

F GR/DSCF = 0.0083
F MG/MMM = 0.6769
F LB/HR = 0.0030
F KG/HR = 0.0013

B GR/DSCF = 0.0093
B MG/MMM = 0.7784
B LB/HR = 0.0034
B KG/HR = 0.0015

RCL 07
RCL 08
FIX 6

(A)
Standard Press = 29.92 in Hg

OW DATA

---

es)	10.50
L AREA (sq feet)	0.60
(inches Hg)	29.10
	21.0
NT (%)	0.0
	2.4
eg F)	73
E (inches water)	-1.10
LAR WEIGHT	28.84
q rt inches water)	0.61
N FACTOR	0.84
)	35.11
E (ACFM)	1,267
E (DSCFM)	1,170

SAMPLING DATA

DRY GAS VOLUME SAMPLED (DCF)	55.031
DRY GAS VOLUME SAMPLED (DSCF)	51.278
DRY GAS METER TEMPERATURE (deg F)	81
DRY GAS METER GAMMA	0.99
AVERAGE ORIFICE PRESSURE (inches water)	2.70
TOTAL RUN TIME (min)	60
NOZZLE DIAMETER (inches)	0.289
ISOKINETIC (%)	96.4

LABORATORY DATA

MOISTURE RECOVERED (mls)	27.40
10^{-4} Cr6 ~~PARTIC.~~ FROM NOZ., PROBE & WASHES (mg)	9825.00
PARTICULATE FROM FILTER (mg)	0.00
10^{-4} Cr ~~PARTICULATE~~ FROM IMPINGERS (mg)	11303.00

PARTICULATE DATA

FRONT HALF	(gr/DSCF)	2.9564
	(gr/ACF)	2.7296
10^{-4} Cr6	(lb/hr)	29.65
BACK HALF	(gr/DSCF)	3.4012
	(gr/ACF)	3.1402
10^{-4} Cr	(lb/hr)	34.11
TOTAL	~~(gr/DSCF)~~	~~6.3576~~
	~~(gr/ACF)~~	~~5.8699~~
	~~(lb/hr)~~	~~63.76~~

SUMMARY OF EMISSIONS

PLANT Douglas Aircraft (Enclosure 2-Ref B) LOCATION Cypress, California

SAMPLED SOURCE Anodizing & Etching @ Bldgs 385 — Long Beach, California

RUN	DATE	1 V_m Std.	2 DSCFM
8908108 Uncontrol B	31Aug89	60.435	1177
8908105 Balls Only A	31Aug89	113.780	1168

FRONT HALF MILLIGRAMS			
PROBE	CYCLONE	FILTER	HEX 3 ~~TOTAL~~
			1.4211
			.7267

TOTAL 4 ~~BACK HALF~~	5 FRONT + BACK TOTAL
1.2269	
.7555	

CONCENTRATIONS

FRONT HALF				
RUN	Gr/DSCF	Mg/M³	Lb/Hr	Kg/Hr
		.8304	3.66×10^{-3}	
		.2255	9.87×10^{-4}	
6	7	8	9	

BACK HALF			
Gr/DSCF	Mg/M³	Lb/Hr	Kg/Hr
	.7169	3.16×10^{-3}	
	.2345	1.03×10^{-3}	
10	17	18	19

TOTAL			
Gr/DSCF	Mg/M³	Lb/Hr	Kg/Hr
20	21	22	23

Remarks: Hex is greater than total (1st Run)

SAMPLING SUMMARY SHEET

PLANT _____ LOCATION _____

SAMPLED SOURCE _____

Run	Date	N_p	(3) Y_m	(4) ΔH	(5) P Bar.	(6) V_m	(7) T_m	(8) V_m Std.	(9) %	(10) P_{st}	17 P_s	(18) T_s	(19) VP	(20) V_w	21 $V_{w_{gas}}$	22 %M	23 M_d

Run	(24) CO_2	(25) O_2	26 N_2	(27) CO	(28) —	29 MW_d	30 MW	(31) C_p	(32) $\sqrt{\Delta P_s (T_s + 460)}$	(33) T_t	(34) D_n	35 V_s	(36) D_s	(37) Area	38 ACFM	(39) DSCFM	40 %I

$$V_m \text{ Std.} = Y_m \frac{17.64 \times V_m \left(P \text{ Bar.} + \frac{\Delta H}{13.6}\right)}{(T_m + 460)}$$

$$\%M = \frac{100 \times V_{w_{gas}}}{V_m \text{ Std.} + V_{w_{gas}}}$$

$$V_{w_{gas}} = 0.0471\ V_w$$

$$M_d = \frac{100 - \%M}{100}$$

$$MW_d = \%CO_2 \times .44 + (\%O_2 \times .32) + (\%CO + \%N_2) \times .28 + \left(\%\text{Other} \times \frac{\text{Mol. wt.}}{100}\right)$$

$$MW = MW_d \times M_d + 18(1 - M_d)$$

$$P_s = P \text{ Bar.} + \frac{P_{st}}{13.6}$$

$$V_s = 85.49 \times C_p \sqrt{\Delta P_s (T_s + 460)} \left[\frac{1}{P_s \times MW}\right]^{1/2}$$

$$\%I = \frac{0.09450 \times (T_s + 460) \times V_m \text{ Std.}}{V_s \times T_t \times P_s \times M_d \times A_n}$$

N_p = Total No. of Sampling points

Y_m = Meter Box Correction Factor

ΔH = Average Orfice Pressure Drop, inches H_2O

P Bar. = Barometric Pressure, Inches Hg, Absolute

V_m = Volume of Dry Gas at Meter Conditions, DCF

T_m = Average Meter Temperature, °F.

V_m Std. = Volume of Dry Gas at STP. DSCF[a]

% = Per Cent other gas removed before Dry Gas Meter

P_{st} = Static Pressure of Stack Gas, inches H_2O

P_s = Stack Gas Pressure, inches Hg.

T_s = Average Stack Temperature, °F

VP = Vapor Pressure of H_2O At Stack Temperature

V_w = Total H_2O Collected in Impingers and Silica Gel

$V_{w_{gas}}$ = Volumn of water vapor collected at STP, SCF[b]

%M = Per Cent Moisture by volume

M_d = Mole Fraction of Dry Gas

$\%CO_2$ = Volume % Dry

$\%O_2$ = Volume % Dry

$\%N_2$ = Volume % Dry

%CO = Volume % Dry

MW_d = Molecular Weight of Stack Gas Dry Basis

MW = Molecular Weight of Stack Gas, Wet Basis

C_p = Pitot Tube Coefficient

$\sqrt{\Delta P (T_s + 460)}$ Is determined by averaging the square root of the product of the velocity head (P) and the absolute stack temperature from each sampling point.

T_t = Net time of test in minutes

D_n = Sampling Nozzle Diameter, inches

A_n = Area of Nozzle opening, ft^2.

V_s = Stack Gas Velocity at Stack Conditions, Feet per second.

D_s = Diameter of Stack, inches

Area = Area of duct in ft^2

ACFM = Actual Cubic Feet per minute

DSCFM = Dry Standard Cubic Feet per minute

%I = Per Cent Isokinetic

[a] Dry Standard Cubic Feet @ 68°F, 29.92 in. Hg.

[b] Standard Conditions @ 68°F. 29.92 in. Hg.

(2)

8904106

Engineering-Science, Pasadena, California

Plant: DAC LB BLDG #3
Source: TANK #370
Date: 8/31/89
Run: BALL [illegible]
Standard Temp = 60 deg F Standard Press = 29.92 in Hg

FLOW DATA

STACK DIAMETER (inches)	10.50
STACK CROSS-SECTIONAL AREA (sq feet)	0.60
BAROMETRIC PRESSURE (inches Hg)	29.10
OXYGEN CONTENT (%)	21.0
CARBON DIOXIDE CONTENT (%)	0.0
MOISTURE CONTENT (%)	2.5
STACK TEMPERATURE (deg F)	81
STACK STATIC PRESSURE (inches water)	-1.10
DRY STACK GAS MOLECULAR WEIGHT	28.84
VELOCITY PRESSURE (sq rt inches water)	0.61
PITOT TUBE CORRECTION FACTOR	0.84
VELOCITY (ft per sec)	35.38
EXHAUST GAS FLOW RATE (ACFM)	1,277
EXHAUST GAS FLOW RATE (DSCFM)	1,160

SAMPLING DATA

DRY GAS VOLUME SAMPLED (DCF)	130.926
DRY GAS VOLUME SAMPLED (DSCF)	119.504
DRY GAS METER TEMPERATURE (deg F)	105
DRY GAS METER GAMMA	1.01
AVERAGE ORIFICE PRESSURE (inches water)	3.80
TOTAL RUN TIME (min)	120
NOZZLE DIAMETER (inches)	0.314
ISOKINETIC (%)	96.0

LABORATORY DATA

	MOISTURE RECOVERED (mls)	66.30
10^{-4} Cr	~~PARTIC.~~ FROM NOZ., PROBE & WASHES (mg)	~~6781.00~~ 7630
	PARTICULATE FROM FILTER (mg)	0.00
10^{-4} Cr	~~PARTICULATE~~ FROM IMPINGERS (mg)	~~7430.00~~ 6775

PARTICULATE DATA

FRONT HALF	(gr/DSCF)	0.8768	
	(gr/ACF)	0.7969	
10^{-4} Cr	(lb/hr)	~~8.72~~	9.80 R1
BACK HALF	(gr/DSCF)	0.9593	
	(gr/ACF)	0.8718	
10^{-4} Cr	(lb/hr)	~~9.54~~	8.70 R
TOTAL	~~(gr/DSCF)~~	~~1.8362~~	
	~~(gr/ACF)~~	~~1.6687~~	
	~~(lb/hr)~~	~~18.26~~	

1.

(2)

890810 5

Engineering-Science, Pasadena, California

Plant: DAC LB BLDG #3
Source: TANK #370
Date: 8/31/89
Run: BALLS ONLY (A)
Standard Temp = 60 deg F Standard Press = 29.92 in Hg

FLOW DATA

STACK DIAMETER (inches)	10.50
STACK CROSS-SECTIONAL AREA (sq feet)	0.60
BAROMETRIC PRESSURE (inches Hg)	29.10
OXYGEN CONTENT (%)	21.0
CARBON DIOXIDE CONTENT (%)	0.0
MOISTURE CONTENT (%)	1.7
STACK TEMPERATURE (deg F)	81
STACK STATIC PRESSURE (inches water)	-1.10
DRY STACK GAS MOLECULAR WEIGHT	28.84
VELOCITY PRESSURE (sq rt inches water)	0.61
PITOT TUBE CORRECTION FACTOR	0.84
VELOCITY (ft per sec)	35.33
EXHAUST GAS FLOW RATE (ACFM)	1,275
EXHAUST GAS FLOW RATE (DSCFM)	1,168

SAMPLING DATA

DRY GAS VOLUME SAMPLED (DCF)	122.566
DRY GAS VOLUME SAMPLED (DSCF)	113.780
DRY GAS METER TEMPERATURE (deg F)	84
DRY GAS METER GAMMA	0.99
AVERAGE ORIFICE PRESSURE (inches water)	3.41
TOTAL RUN TIME (min)	120
NOZZLE DIAMETER (inches)	0.306
ISOKINETIC (%)	95.6

LABORATORY DATA

MOISTURE RECOVERED (mls)	42.00
10^{-4} Cr6 ~~PARTIC.~~ FROM NOZ., PROBE & WASHES (mg)	7267.00
PARTICULATE FROM FILTER (mg)	0.00
10^{-4} Cr ~~PARTICULATE~~ FROM IMPINGERS (mg)	~~7670.00~~

7255

PARTICULATE DATA

FRONT HALF	(gr/DSCF)	0.9855
	(gr/ACF)	0.9032
10^{-4} Cr6	(lb/hr)	9.87
BACK HALF	(gr/DSCF)	1.0266
	(gr/ACF)	0.9409
10^{-4} Cr	(lb/hr)	~~10.28~~ 10.76
TOTAL	~~(gr/DSCF)~~	~~2.0121~~
	~~(gr/ACF)~~	~~1.8441~~
	~~(lb/hr)~~	~~20.15~~

9/15 Only

A

8908105

XROM "MASSFLO"

Engineer California

RUN NUMBER

Plant:
Source:
Date:
Run:
Standard Tem ard Press = 29.92 in Hg

ABS
XROM "MASSFLO"

RUN NUMBER
113.780 RUN

VOL MTR STD ?
RUN

STACK DSCFM ?
1168.00 RUN

FRONT 1/2 MG ?
.7267 RUN

BACK 1/2 MG ?
.7555 RUN

F GR/DSCF = 9.86E-5
F MG/MMM = 0.23
F LB/HR = 9.87E-4
F KG/HR = 4.48E-4

B GR/DSCF = 1.02E-4
B MG/MMM = 0.23
B LB/HR = 1.03E-3
B KG/HR = 4.65E-4

STACK I	10.50
STACK (	0.60
BAROME	29.10
OXYGEN	21.0
CARBON	0.0
MOISTU	1.7
STACK	81
STACK	-1.10
DRY ST	28.84
VELOCI	0.61
PITOT	0.84
VELOCI	35.33
EXHAUS	1,275
EXHAUS	1,168

q feet)
Hg)
s water)
HT
hes water)
1)

TA

DRY GAS VOLUME [illegible])	122.566
DRY GAS VOLUME SAMPLED (DSCF)	113.780
DRY GAS METER TEMPERATURE (deg F)	84
DRY GAS METER GAMMA	0.99
AVERAGE ORIFICE PRESSURE (inches water)	3.41
TOTAL RUN TIME (min)	120
NOZZLE DIAMETER (inches)	0.306
ISOKINETIC (%)	95.6

LABORATORY DATA

MOISTURE RECOVERED (mls)	42.00
10^{-4} Cr ~~PARTIC.~~ FROM NOZ., PROBE & WASHES (mg)	7267.00
PARTICULATE FROM FILTER (mg)	0.00
10^{-4} Cr ~~PARTICULATE~~ FROM IMPINGERS (mg)	~~7570.00~~

7555

PARTICULATE DATA

FRONT HALF	(gr/DSCF)	0.9855
	(gr/ACF)	0.9032
10^{-4} Cr	(lb/hr)	9.87
BACK HALF	(gr/DSCF)	1.0266
	(gr/ACF)	0.9409
10^{-4} Cr	(lb/hr)	~~10.28~~ 10.76
TOTAL	~~(gr/DSCF)~~	~~2.0121~~
	~~(gr/ACF)~~	~~1.8441~~
	~~(lb/hr)~~	~~20.15~~

(2) Balls off

8904106

XROM "MASSFLO"

Engineer California

RUN NUMBER RUN

Plant:
Source:
Date:
Run:
Standard Temp

VOL MTR STD ? 119.504 RUN

STACK DSCFM ? 1160.00 RUN

FRONT 1/2 MG ? .7630 RUN

BACK 1/2 MG ? .6775 RUN

d Press = 29.92 in Hg

F GR/DSCF = 9.85E-5
F MG/MMM = 0.23
F LB/HR = 9.80E-4
F KG/HR = 4.44E-4

B GR/DSCF = 8.75E-5
B MG/MMM = 0.20
B LB/HR = 8.70E-4
B KG/HR = 3.95E-4

STACK DIA		10.50
STACK CRO	feet)	0.60
BAROMETRI		29.10
OXYGEN CO		21.0
CARBON DI		0.0
MOISTURE		2.5
STACK TEMP		81
STACK STAT	ter)	-1.10
DRY STACK		28.84
VELOCITY P	water)	0.61
PITOT TUBE		0.84
VELOCITY		35.38
EXHAUST GA		1,277
EXHAUST GA		1,160

SAMPLING DATA

DRY GAS VOLUME SAMPLED (DCF)	130.926
DRY GAS VOLUME SAMPLED (DSCF)	119.504
DRY GAS METER TEMPERATURE (deg F)	105
DRY GAS METER GAMMA	1.01
AVERAGE ORIFICE PRESSURE (inches water)	3.80
TOTAL RUN TIME (min)	120
NOZZLE DIAMETER (inches)	0.314
ISOKINETIC (%)	96.0

LABORATORY DATA

	MOISTURE RECOVERED (mls)	66.30
10^{-4} Cr	~~PARTIC.~~ FROM NOZ., PROBE & WASHES (mg)	~~6781.00~~ .7630
	PARTICULATE FROM FILTER (mg)	0.00
10^{-4} Cr	~~PARTICULATE~~ FROM IMPINGERS (mg)	~~7430.00~~ .6775

PARTICULATE DATA

FRONT HALF	(gr/DSCF)	0.8768	
	(gr/ACF)	0.7969	
10^{-4} Cr	(lb/hr)	~~9.72~~	9.80
BACK HALF	(gr/DSCF)	0.9593	
	(gr/ACF)	0.8718	
10^{-4} Cr	(lb/hr)	~~9.54~~	8.70
TOTAL	~~(gr/DSCF)~~	~~1.8362~~	
	~~(gr/ACF)~~	~~1.6687~~	
	~~(lb/hr)~~	~~18.54~~	

SUMMARY OF EMISSIONS

PLANT Douglas Aircraft (Enclosure 2-Ref B) LOCATION Cypress, California

SAMPLED SOURCE Anodizing & Etching at Buildings 365 – Long Beach, California

	RUN	DATE	(1) V_m Std.	(2) DSCFM	FRONT HALF MILLIGRAMS PROBE	CYCLONE	FILTER	HEX (3) ~~TOTAL~~	Total (4) ~~BACK HALF~~	5 FRONT + BACK TOTAL
890810	BALLS ONLY	31AUG89	119.504	1160				.7630	.6775	
890892	Foam & Anti mist A	30AUG89	171.377	1233				< .0021	< .0014	

CONCENTRATIONS

RUN	FRONT HALF Gr/DSCF	Mg/M³	Lb/Hr	Kg/Hr	BACK HALF Gr/DSCF	Mg/M³	Lb/Hr	Kg/Hr	TOTAL Gr/DSCF	Mg/M³	Lb/Hr	Kg/Hr
		.2255	9.80×10^{-4}			.2002	8.70×10^{-4}					
		.000433	2.00×10^{-6}			.000288	1.33×10^{-6}					
	6	7	8	9	10	17	18	19	20	21	22	23

Remarks: Hex is greater than total

SAMPLING SUMMARY SHEET

PLANT _____ LOCATION _____

SAMPLED SOURCE _____

Run	Date	N_p	(3) Y_m	(4) ΔH	(5) P Bar.	(6) V_m	(7) T_m	(8) V_m Std.	(9) %	(10) P_{st}	17 P_s	(18) T_s	(19) VP	(20) V_w	21 $V_{w_{gas}}$	22 %M	23 M_d

Run	(24) CO_2	(25) O_2	26 N_2	(27) CO	(28) ___	29 MW_d	30 MW	(31) C_p	(32) $\sqrt{\Delta P_s (T_s + 460)}$	(33) T_t	(34) D_n	35 V_s	(36) D_s	(37) Area	38 ACFM	(39) DSCFM	40 %I

$$V_m \text{ Std.} = Y_m \frac{17.64 \times V_m \left(P \text{ Bar.} + \frac{\Delta H}{13.6}\right)}{(T_m + 460)}$$

$$\%M = \frac{100 \times V_{w_{gas}}}{V_m \text{ Std.} + V_{w_{gas}}}$$

$$V_{w_{gas}} = 0.0471\ V_w$$

$$M_d = \frac{100 - \%M}{100}$$

$$MW_d = \%CO_2 \times .44 + (\%O_2 \times .32) + (\%CO + \%N_2) \times .28 + \left(\%\text{Other} \times \frac{\text{Mol. wt.}}{100}\right)$$

$$MW = MW_d \times M_d + 18(1 - M_d)$$

$$P_s = P \text{ Bar.} \pm \frac{P_{st}}{13.6}$$

$$V_s = 85.49 \times C_p \sqrt{\Delta P_s (T_s + 460)} \left[\frac{1}{P_s \times MW}\right]^{1/2}$$

$$\%I = \frac{0.09450 \times (T_s + 460) \times V_m \text{ Std.}}{V_s \times T_t \times P_s \times M_d \times A_n}$$

N_p = Total No. of Sampling points

Y_m = Meter Box Correction Factor

ΔH = Average Orfice Pressure Drop, inches H_2O

P Bar. = Barometric Pressure, Inches Hg, Absolute

V_m = Volume of Dry Gas at Meter Conditions, DCF

T_m = Average Meter Temperature, °F.

V_m Std. = Volume of Dry Gas at STP, DSCF[a]

% = Per Cent other gas removed before Dry Gas Meter

P_{st} = Static Pressure of Stack Gas, inches H_2O

P_s = Stack Gas Pressure, inches Hg.

T_s = Average Stack Temperature, °F

VP = Vapor Pressure of H_2O At Stack Temperature

V_w = Total H_2O Collected in Impingers and Silica Gel

$V_{w_{gas}}$ = Volumn of water vapor collected at STP, SCF[b]

%M = Per Cent Moisture by volume

M_d = Mole Fraction of Dry Gas

$\%CO_2$ = Volume % Dry

$\%O_2$ = Volume % Dry

$\%N_2$ = Volume % Dry

%CO = Volume % Dry

MW_d = Molecular Weight of Stack Gas Dry Basis

MW = Molecular Weight of Stack Gas, Wet Basis

C_p = Pitot Tube Coefficient

$\sqrt{\Delta P_s (T_s + 460)}$ Is determined by averaging the square root of the product of the velocity head (P_s) and the absolute stack temperature from each sampling point.

T_t = Net time of test in minutes

D_n = Sampling Nozzle Diameter, inches

A_n = Area of Nozzle opening, ft^2.

V_s = Stack Gas Velocity at Stack Conditions, Feet per second.

D_s = Diameter of Stack, inches

Area = Area of duct in ft^2

ACFM = Actual Cubic Feet per minute

DSCFM = Dry Standard Cubic Feet per minute

%I = Per Cent Isokinetic

[a]Dry Standard Cubic Feet @ 68°F, 29.92 in. Hg.

[b]Standard Conditions @ 68°F. 29.92 in. Hg.

(2)

890893

Engineering-Science, Pasadena, California

Plant: DAC LB BLDG #3
Source: TANK #370
Date: 8/30/89
Run: FOAM & ANTI-MIST (B)
Standard Temp = 60 deg F Standard Press = 29.92 in Hg

FLOW DATA

STACK DIAMETER (inches)	10.50
STACK CROSS-SECTIONAL AREA (sq feet)	0.60
BAROMETRIC PRESSURE (inches Hg)	29.10
OXYGEN CONTENT (%)	21.0
CARBON DIOXIDE CONTENT (%)	0.0
MOISTURE CONTENT (%)	1.6
STACK TEMPERATURE (deg F)	75
STACK STATIC PRESSURE (inches water)	-1.10
DRY STACK GAS MOLECULAR WEIGHT	28.84
VELOCITY PRESSURE (sq rt inches water)	0.64
PITOT TUBE CORRECTION FACTOR	0.84
VELOCITY (ft per sec)	36.85
EXHAUST GAS FLOW RATE (ACFM)	1,330
EXHAUST GAS FLOW RATE (DSCFM)	1,233

SAMPLING DATA

DRY GAS VOLUME SAMPLED (DCF)	201.872
DRY GAS VOLUME SAMPLED (DSCF)	187.498
DRY GAS METER TEMPERATURE (deg F)	85
DRY GAS METER GAMMA	0.99
AVERAGE ORIFICE PRESSURE (inches water)	4.35
TOTAL RUN TIME (min)	180
NOZZLE DIAMETER (inches)	0.314
ISOKINETIC (%)	94.4

LABORATORY DATA

MOISTURE RECOVERED (mls)	65.00
10^{-6} Cr6 ~~PARTIC.~~ FROM NOZ., PROBE & WASHES (mg)	1700.00
~~PARTICULATE~~ FROM FILTER (mg)	0.00
10^{-6} Cr6 PARTICULATE FROM IMPINGERS (mg)	~~100.00~~ 170 RR

PARTICULATE DATA

FRONT HALF	(gr/DSCF)	0.1399
	(gr/ACF)	0.1298
10^{-6} Cr6	(lb/hr)	1.48
BACK HALF	(gr/DSCF)	0.0082
	(gr/ACF)	0.0076
10^{-6} Cr	(lb/hr)	~~0.09~~ 1.48 RR
TOTAL	~~(gr/DSCF)~~	~~0.1481~~
	~~(gr/ACF)~~	~~0.1374~~
	~~(lb/hr)~~	~~1.57~~

890891

Engineering-Science, Pasadena, California

Plant: DAC LB BLDG #3
Source: TANK #370
Date: 8/30/89
Run: FOAM & ANTI-MIST (A)
Standard Temp = 60 deg F Standard Press = 29.92 in Hg

FLOW DATA

STACK DIAMETER (inches)	10.50
STACK CROSS-SECTIONAL AREA (sq feet)	0.60
BAROMETRIC PRESSURE (inches Hg)	29.10
OXYGEN CONTENT (%)	21.0
CARBON DIOXIDE CONTENT (%)	0.0
MOISTURE CONTENT (%)	1.7
STACK TEMPERATURE (deg F)	75
STACK STATIC PRESSURE (inches water)	-1.10
DRY STACK GAS MOLECULAR WEIGHT	28.84
VELOCITY PRESSURE (sq rt inches water)	0.64
PITOT TUBE CORRECTION FACTOR	0.84
VELOCITY (ft per sec)	36.86
EXHAUST GAS FLOW RATE (ACFM)	1,330
EXHAUST GAS FLOW RATE (DSCFM)	1,233

SAMPLING DATA

DRY GAS VOLUME SAMPLED (DCF)	186.614
DRY GAS VOLUME SAMPLED (DSCF)	171.377
DRY GAS METER TEMPERATURE (deg F)	101
DRY GAS METER GAMMA	1.01
AVERAGE ORIFICE PRESSURE (inches water)	3.40
TOTAL RUN TIME (min)	180
NOZZLE DIAMETER (inches)	0.300
ISOKINETIC (%)	94.6

LABORATORY DATA

	MOISTURE RECOVERED (mls)	62.30
10^{-6} Cr6	~~PARTIC.~~ FROM NOZ., PROBE & WASHES (mg)	~~1700.00~~ 2100 RR
	PARTICULATE FROM FILTER (mg)	0.00
10^{-6} Cr	~~PARTICULATE~~ FROM IMPINGERS (mg)	1400.00

PARTICULATE DATA

FRONT HALF	(gr/DSCF)	0.1531	
	(gr/ACF)	0.1419	
10^{-6} Cr6	(lb/hr)	1.62	2.00 RR
BACK HALF	(gr/DSCF)	0.1260	
	(gr/ACF)	0.1169	
10^{-6} Cr	(lb/hr)	1.33	
TOTAL	~~(gr/DSCF)~~	~~0.2791~~	
	~~(gr/ACF)~~	~~0.2587~~	
	~~(lb/hr)~~	~~2.95~~	

1 (2)

Foam & Anti Mist A 089

LN
XROM "MASSFLO"

Engineering-Science, Pa:

Plant: DAC LB BLDG #3
Source: TANK #370
Date: 8/30/89
Run: FOAM & ANTI-MIST
Standard Temp = 60 deg F

RUN NUMBER RUN

VOL MTR STD ?
171.377 RUN

STACK DSCFM ?
1233.00 RUN

FRONT 1/2 MG ?
.0021 RUN

BACK 1/2 MG ?
.0014 RUN

F GR/DSCF = 1.89E-7
F MG/MMM = 4.33E-4
F LB/HR = 2.00E-6
F KG/HR = 9.07E-7

B GR/DSCF = 1.26E-7
B MG/MMM = 2.88E-4
B LB/HR = 1.33E-6
B KG/HR = 6.04E-7

FLOW I

STACK DIAMETER (inches)		0
STACK CROSS-SECTIONAL AF		0
BAROMETRIC PRESSURE (inc	in Hg	0
OXYGEN CONTENT (%)		0
CARBON DIOXIDE CONTENT (		0
MOISTURE CONTENT (%)		7
STACK TEMPERATURE (deg F		5
STACK STATIC PRESSURE (i		0
DRY STACK GAS MOLECULAR		4
VELOCITY PRESSURE (sq rt		4
PITOT TUBE CORRECTION FA		4
VELOCITY (ft per sec)		6
EXHAUST GAS FLOW RATE (A		0
EXHAUST GAS FLOW RATE (D		3

SAMPLING DATA

DRY GAS VOLUME SAMPLED (DCF)	186.614
DRY GAS VOLUME SAMPLED (DSCF)	171.377
DRY GAS METER TEMPERATURE (deg F)	101
DRY GAS METER GAMMA	1.01
AVERAGE ORIFICE PRESSURE (inches water)	3.40
TOTAL RUN TIME (min)	180
NOZZLE DIAMETER (inches)	0.300
ISOKINETIC (%)	94.6

LABORATORY DATA

	MOISTURE RECOVERED (mls)	62.30
10^{-6} Cr6	~~PARTIC.~~ FROM NOZ., PROBE & WASHES (mg)	~~1700.00~~ 2100 RR
	PARTICULATE FROM FILTER (mg)	0.00
10^{-6} Cr	~~PARTICULATE~~ FROM IMPINGERS (mg)	1400.00

PARTICULATE DATA

FRONT HALF	(gr/DSCF)	0.1531
	(gr/ACF)	0.1419
10^{-6} Cr6	(lb/hr)	1.62 2100 RR
BACK HALF	(gr/DSCF)	0.1260
	(gr/ACF)	0.1169
10^{-6} Cr	(lb/hr)	1.33
TOTAL	~~(gr/DSCF)~~	~~0.2791~~
	~~(gr/ACF)~~	0 ~~.2587~~
	~~(lb/hr)~~	~~2.95~~

Foam & Anti Mist
B

890893

XROM "MASSFLO"

RUN NUMBER

RUN

VOL MTR STD ?
187.498 RUN

STACK DSCFM ?
1233.00 RUN

FRONT 1/2 MG ?
.0017 RUN

BACK 1/2 MG ?
.0011 RUN

F GR/DSCF = 1.49E-7
F MG/MMM = 3.20E-4
F LB/HR = 1.48E-6
F KG/HR = 6.71E-7

B GR/DSCF = 9.85E-8
B MG/MMM = 2.07E-4
B LB/HR = 9.57E-7
B KG/HR = 4.34E-7

...e, Pasadena, California

...DG #3

...TI-MIST (B)
... F Standard Press = 29.92 in Hg

FLOW DATA

...inches)	10.50
...IONAL AREA (sq feet)	0.60
...URE (inches Hg)	29.10
...%)	21.0
...CONTENT (%)	0.0
...T (%)	1.6
...RE (deg F)	75
...ESSURE (inches water)	-1.10
...OLECULAR WEIGHT	28.84
...RE (sq rt inches water)	0.64
...ECTION FACTOR	0.84
...er sec)	36.85
...OW RATE (ACFM)	1,330
EXHAUST GAS ...OW RATE (DSCFM)	1,233

SAMPLING DATA

DRY GAS VOLUME SAMPLED (DCF)	201.872
DRY GAS VOLUME SAMPLED (DSCF)	187.498
DRY GAS METER TEMPERATURE (deg F)	85
DRY GAS METER GAMMA	0.99
AVERAGE ORIFICE PRESSURE (inches water)	4.35
TOTAL RUN TIME (min)	180
NOZZLE DIAMETER (inches)	0.314
ISOKINETIC (%)	94.4

LABORATORY DATA

MOISTURE RECOVERED (mls)	65.00
10^{-6} Cr ~~PARTIC.~~ FROM NOZ., PROBE & WASHES (mg)	1700.00
~~PARTICULATE~~ FROM FILTER (mg)	0.00
10^{-6} Cr PARTICULATE FROM IMPINGERS (mg)	~~100.00~~ 170 RR

PARTICULATE DATA

FRONT HALF	(gr/DSCF)	0.1399
	(gr/ACF)	0.1298
10^{-6} Cr	(lb/hr)	1.48
BACK HALF	(gr/DSCF)	0.0082
	(gr/ACF)	0.0076
10^{-6} Cr	(lb/hr)	~~0.09~~ 1.48 RR
TOTAL	~~(gr/DSCF)~~	~~0.1481~~
	~~(gr/ACF)~~	~~0.1374~~
	~~(lb/hr)~~	~~1.57~~

SUMMARY OF EMISSIONS

PLANT Douglas Aircraft (Enclosure 2 - Reference B) LOCATION Cypress California

SAMPLED SOURCE Anodizing & Etching at Buildings 3 & 5 - Long Beach, California

	RUN	DATE	1 V_m Std.	2 DSCFM
890893	Foam + Anti Mist B		187.498	1223
890908	Uncoated 1		61.391	928

FRONT HALF MILLIGRAMS					Total 4	5
PROBE	CYCLONE	FILTER	HEX 3 ~~TOTAL~~		~~BACK HALF~~	FRONT + BACK TOTAL
		<	.0017	<	.0011	
		<	.0016		.0016	

CONCENTRATIONS

FRONT HALF					BACK HALF				TOTAL			
RUN	Gr/DSCF	Mg/M^3	Lb/Hr	Kg/Hr	Gr/DSCF	Mg/M^3	Lb/Hr	Kg/Hr	Gr/DSCF	Mg/M^3	Lb/Hr	Kg/Hr
		.000320	1.48×10^{-6}			.000207	9.57×10^{-7}					
		.000920	3.20×10^{-6}			.000920	3.20×10^{-6}					
	6	7	8	9	10	17	18	19	20	21	22	23

Remarks:

SAMPLING SUMMARY SHEET

PLANT _____ LOCATION _____

SAMPLED SOURCE _____

Run	Date	N_p	3 Y_m	4 ΔH	5 P Bar.	6 V_m	7 T_m	8 V_m Std.	9 %	10 P_{st}	17 P_s	18 T_s	19 VP	20 V_w	21 $V_{w_{gas}}$	22 %M	23 M_d

Run	24 CO_2	25 O_2	26 N_2	27 CO	28 —	29 MW_d	30 MW	31 C_p	32 $\sqrt{\Delta P_s (T_s + 460)}$	33 T_t	34 D_n	35 V_s	36 D_s	37 Area	38 ACFM	39 DSCFM	40 %I

$$V_m \text{ Std.} = Y_m \frac{17.64 \times V_m \left(P \text{ Bar.} + \frac{\Delta H}{13.6}\right)}{(T_m + 460)}$$

$$\%H = \frac{100 \times V_{w_{gas}}}{V_m \text{ Std.} + V_{w_{gas}}}$$

$$V_{w_{gas}} = 0.0471\ V_w$$

$$M_d = \frac{100 - \%H}{100}$$

$$MW_d = \%CO_2 \times .44 + (\%O_2 \times .32) + (\%CO + \%N_2) \times .28 + \left(\%\text{Other} \times \frac{\text{Mol. wt.}}{100}\right)$$

$$MW = MW_d \times M_d + 18(1 - M_d)$$

$$P_s = P \text{ Bar.} \pm \frac{P_{st}}{13.6}$$

$$V_s = 85.49 \times C_p \sqrt{\Delta P_s (T_s + 460)} \left[\frac{1}{P_s \times MW}\right]^{1/2}$$

$$\%I = \frac{0.09450 \times (T_s + 460) \times V_m \text{ Std.}}{V_s \times T_t \times P_s \times M_d \times A_n}$$

M_p = Total No. of Sampling points

Y_m = Meter Box Correction Factor

ΔH = Average Orfice Pressure Drop, inches H_2O

P Bar. = Barometric Pressure, Inches Hg, Absolute

V_m = Volume of Dry Gas at Meter Conditions, DCF

T_m = Average Meter Temperature, °F.

V_m Std. = Volume of Dry Gas at STP. DSCF[a]

% = Per Cent other gas removed before Dry Gas Meter

P_{st} = Static Pressure of Stack Gas, inches H_2O

P_s = Stack Gas Pressure, inches Hg.

T_s = Average Stack Temperature, °F

VP = Vapor Pressure of H_2O At Stack Temperature

V_w = Total H_2O Collected in Impingers and Silica Gel

$V_{w_{gas}}$ = Volumn of water vapor collected at STP, SCF[b]

%H = Per Cent Moisture by volume

M_d = Mole Fraction of Dry Gas

$\%CO_2$ = Volume % Dry

$\%O_2$ = Volume % Dry

$\%N_2$ = Volume % Dry

%CO = Volume % Dry

MW_d = Molecular Weight of Stack Gas Dry Basis

MW = Molecular Weight of Stack Gas, Wet Basis

C_p = Pitot Tube Coefficient

$\sqrt{\Delta P (T_s + 460)}$ Is determined by averaging the square root of the product of the velocity head (P) and the absolute stack temperature from each sampling point.

T_t = Net time of test in minutes

D_n = Sampling Nozzle Diameter, inches

A_n = Area of Nozzle opening, ft^2.

V_s = Stack Gas Velocity at Stack Conditions, Feet per second.

D_s = Diameter of Stack, inches

Area = Area of duct in ft^2

ACFM = Actual Cubic Feet per minute

DSCFM = Dry Standard Cubic Feet per minute

%I = Per Cent Isokinetic

[a] Dry Standard Cubic Feet @ 68°F, 29.92 in. Hg.

[b] Standard Conditions @ 68°F. 29.92 in. Hg.

(2)

890909

Engineering-Science, Pasadena, California

Plant: DAC LB BLDG #3
Source: TANK 353
Date: 9/7/89
Run: BALLS ONLY-1
Standard Temp = 60 deg F Standard Press = 29.92 in Hg

FLOW DATA

STACK DIAMETER (inches)	9.00
STACK CROSS-SECTIONAL AREA (sq feet)	0.44
BAROMETRIC PRESSURE (inches Hg)	28.60
OXYGEN CONTENT (%)	21.0
CARBON DIOXIDE CONTENT (%)	0.0
MOISTURE CONTENT (%)	1.9
STACK TEMPERATURE (deg F)	74
STACK STATIC PRESSURE (inches water)	0.80
DRY STACK GAS MOLECULAR WEIGHT	28.84
VELOCITY PRESSURE (sq rt inches water)	0.66
PITOT TUBE CORRECTION FACTOR	0.84
VELOCITY (ft per sec)	38.23
EXHAUST GAS FLOW RATE (ACFM)	1,013
EXHAUST GAS FLOW RATE (DSCFM)	927

SAMPLING DATA

DRY GAS VOLUME SAMPLED (DCF)	66.545
DRY GAS VOLUME SAMPLED (DSCF)	61.296
DRY GAS METER TEMPERATURE (deg F)	80
DRY GAS METER GAMMA	0.99
AVERAGE ORIFICE PRESSURE (inches water)	4.20
TOTAL RUN TIME (min)	60
NOZZLE DIAMETER (inches)	0.306
ISOKINETIC (%)	95.3

LABORATORY DATA

MOISTURE RECOVERED (mls)	25.40
10^{-4} Cr ~~PARTIC.~~ FROM NOZ., PROBE & WASHES (mg)	20.00
PARTICULATE FROM FILTER (mg)	0.00
10^{-4} ~~PARTICULATE~~ FROM IMPINGERS (mg)	225.00

PARTICULATE DATA

FRONT HALF	(gr/DSCF)	0.0050
	(gr/ACF)	0.0046
10^{-4} Cr	(lb/hr)	0.04
BACK HALF	(gr/DSCF)	0.0566
	(gr/ACF)	0.0518
10^{-4} Cr	~~(lb~~/hr)	0.45
TOTAL	~~(gr/DSCF)~~	~~0.0617~~
	~~(gr/ACF)~~	~~0.0564~~
	~~(lb/hr)~~	~~0.49~~

Table 3

890908

Engineering-Science, Pasadena, California

Plant: DAC LB BLDG #3
Source: TANK #353
Date: 9/7/89
Run: UNCONTROLLED-1
Standard Temp = 60 deg F Standard Press = 29.92 in Hg

FLOW DATA

STACK DIAMETER (inches)	9.00
STACK CROSS-SECTIONAL AREA (sq feet)	0.44
BAROMETRIC PRESSURE (inches Hg)	28.60
OXYGEN CONTENT (%)	21.0
CARBON DIOXIDE CONTENT (%)	0.0
MOISTURE CONTENT (%)	1.9
STACK TEMPERATURE (deg F)	73
STACK STATIC PRESSURE (inches water)	0.80
DRY STACK GAS MOLECULAR WEIGHT	28.84
VELOCITY PRESSURE (sq rt inches water)	0.66
PITOT TUBE CORRECTION FACTOR	0.84
VELOCITY (ft per sec)	38.19
EXHAUST GAS FLOW RATE (ACFM)	1,012
EXHAUST GAS FLOW RATE (DSCFM)	928

SAMPLING DATA

DRY GAS VOLUME SAMPLED (DCF)	66.278
DRY GAS VOLUME SAMPLED (DSCF)	61.391
DRY GAS METER TEMPERATURE (deg F)	77
DRY GAS METER GAMMA	0.99
AVERAGE ORIFICE PRESSURE (inches water)	4.20
TOTAL RUN TIME (min)	60
NOZZLE DIAMETER (inches)	0.306
ISOKINETIC (%)	95.4

LABORATORY DATA

MOISTURE RECOVERED (mls)	25.90
10^{-4} Cr6 ~~PARTIC.~~ FROM NOZ., PROBE & WASHES (mg)	16.00
PARTICULATE FROM FILTER (mg)	0.00
10^{-4} Cr ~~PARTICULATE~~ FROM IMPINGERS (mg)	16.00

PARTICULATE DATA

FRONT HALF	(gr/DSCF)	0.0040
	(gr/ACF)	0.0037
10^{-4} Cr6	(lb/hr)	0.03
BACK HALF	(gr/DSCF)	0.0040
	(gr/ACF)	0.0037
10^{-4} Cr	(lb/hr)	0.03
TOTAL	~~(gr/DSCF)~~	~~0.0080~~
	~~(gr/ACF)~~	~~0.0074~~
	~~(lb/hr)~~	~~0.06~~

Table 3

Uncontrolled

890908

FROM "MASSFLO"

Eng ... dena, California

RUN NUMBER

Plant:
Source:
Date:
Run:
Standard ... tandard Press = 29.92 in Hg

VOL MTR STD ?
61.391000 RUN

STACK DSCFM ?
928.000000 RUN

FRONT 1/2 MG ?
.001600 RUN

BACK 1/2 MG ?
.001600 RUN

F GR/DSCF = 4.021983E-7
F MG/MMM = 0.000920
F LB/HR = 0.000003
F KG/HR = 0.000001

B GR/DSCF = 4.021983E-7
B MG/MMM = 0.000920
B LB/HR = 0.000003
B KG/HR = 0.000001

STAC		9.00
STAC	(sq feet)	0.44
BARC	s Hg)	28.60
OXYG		21.0
CARE		0.0
MOIE		1.9
STAC		73
STAC	hes water)	0.80
DRY	IGHT	28.84
VELO	nches water)	0.66
PITO	OR	0.84
VELO		38.19
EXHA	M)	1,012
EXHAUST GAS FLOW RATE (DSCFM)		928

SAMPLING DATA

DRY GAS VOLUME SAMPLED (DCF)	66.278
DRY GAS VOLUME SAMPLED (DSCF)	61.391
DRY GAS METER TEMPERATURE (deg F)	77
DRY GAS METER GAMMA	0.99
AVERAGE ORIFICE PRESSURE (inches water)	4.20
TOTAL RUN TIME (min)	60
NOZZLE DIAMETER (inches)	0.306
ISOKINETIC (%)	95.4

LABORATORY DATA

MOISTURE RECOVERED (mls)	25.90
10^{-4} Cr6 ~~PARTIC.~~ FROM NOZ., PROBE & WASHES (mg)	16.00
PARTICULATE FROM FILTER (mg)	0.00
10^{-4} Cr ~~PARTICULATE~~ FROM IMPINGERS (mg)	16.00

PARTICULATE DATA

FRONT HALF	(gr/DSCF)	0.0040
	(gr/ACF)	0.0037
10^{-4} Cr6	(lb/hr)	0.03
BACK HALF	(gr/DSCF)	0.0040
	(gr/ACF)	0.0037
10^{-4} Cr	(lb/hr)	0.03
TOTAL	~~(gr/DSCF)~~	~~0.0080~~
	~~(gr/ACF)~~	~~0.0074~~
	~~(lb/hr)~~	~~0.06~~

(2)

Balls Only

890909

Engineering XROM "MASSFLO" ifornia

Plant: DAC
Source: TANK
Date: 9/7/
Run: BALL
Standard Temp = 6 ress = 29.92 in Hg

RUN NUMBER RUN
VOL MTR STD ?
61.296 RUN
STACK DSCFM ?
927.00 RUN
FRONT 1/2 MG ?
.0020 RUN
BACK 1/2 MG ?
.0225 RUN

F GR/DSCF = 5.04E-7
F MG/MMM = 1.15E-3
F LB/HR = 4.00E-6
F KG/HR = 1.81E-6

B GR/DSCF = 5.66E-6
B MG/MMM = 0.01
B LB/HR = 4.50E-5

STACK DIAMETE	9.00
STACK CROSS-S)	0.44
BAROMETRIC PR	28.60
OXYGEN CONTEN	21.0
CARBON DIOXID	0.0
MOISTURE CONT	1.9
STACK TEMPERA	74
STACK STATIC I)	0.80
DRY STACK GAS	28.84
VELOCITY PRESS hr)	0.66
PITOT TUBE COF	0.84
VELOCITY (ft p	38.23
EXHAUST GAS FL (ACFM)	1,013
EXHAUST GAS FLOW RATE (DSCFM)	927

SAMPLING DATA

DRY GAS VOLUME SAMPLED (DCF)	66.545
DRY GAS VOLUME SAMPLED (DSCF)	61.296
DRY GAS METER TEMPERATURE (deg F)	80
DRY GAS METER GAMMA	0.99
AVERAGE ORIFICE PRESSURE (inches water)	4.20
TOTAL RUN TIME (min)	60
NOZZLE DIAMETER (inches)	0.306
ISOKINETIC (%)	95.3

LABORATORY DATA

MOISTURE RECOVERED (mls)	25.40
10^{-4} Cr^6 ~~PARTIC.~~ FROM NOZ., PROBE & WASHES (mg)	20.00
PARTICULATE FROM FILTER (mg)	0.00
10^{-4} ~~PARTICULATE~~ FROM IMPINGERS (mg)	225.00

PARTICULATE DATA

FRONT HALF	(gr/DSCF)	0.0050
	(gr/ACF)	0.0046
10^{-4} Cr^6	(lb/hr)	0.04
BACK HALF	(gr/DSCF)	0.0566
	(gr/ACF)	0.0518
10^{-4} Cr	~~(lb~~/hr)	0.45
TOTAL	~~(gr/DSCF)~~	~~0.0617~~
	~~(gr/ACF)~~	~~0.0564~~
	~~(lb/hr)~~	~~0.49~~

SUMMARY OF EMISSIONS

PLANT Douglas Aircraft (Enclosure 2 - Reference B) LOCATION Cypress, California

SAMPLED SOURCE Anodizing & Etching at Buildings 3 & 5 - Long Beach California

	RUN	DATE	(1) V_m Std.	(2) DSCFM
890909	Balls Only 1	7 Sep 89	61.296	927
890910	Anti Mist 1	7 Sep 89	124.602	929

FRONT HALF MILLIGRAMS			HEX (3)	Total (4)	5
PROBE	CYCLONE	FILTER	~~TOTAL~~	~~BACK HALF~~	FRONT + BACK TOTAL
		<	.0020	.0225	
		<	.0018	.0466	

CONCENTRATIONS

FRONT HALF					BACK HALF				TOTAL			
RUN	Gr/DSCF	Mg/M^3	Lb/Hr	Kg/Hr	Gr/DSCF	Mg/M^3	Lb/Hr	Kg/Hr	Gr/DSCF	Mg/M^3	Lb/Hr	Kg/Hr
		.00115	4.0×10^{-6}			.01296	4.50×10^{-5}					
		.000510	1.78×10^{-6}			.01321	4.60×10^{-5}					
6		7	8	9	10	17	18	19	20	21	22	23

Remarks:

SAMPLING SUMMARY SHEET

PLANT _____ LOCATION _____

SAMPLED SOURCE _____

Run	Date	N_p	(3) Y_m	(4) ΔH	(5) P Bar.	(6) V_m	(7) T_m	(8) V_m Std.	(9) %	(10) P_{st}	17 P_s	(18) T_s	(19) VP	(20) V_w	21 $V_{w_{gas}}$	22 %M	23 M_d

Run	(24) CO_2	(25) O_2	26 N_2	(27) CO	(28) ___	29 MW_d	30 MW	(31) C_p	(32) $\sqrt{\Delta P_s (T_s + 460)}$	(33) T_t	(34) D_n	35 V_s	(36) D_s	(37) Area	38 ACFM	(39) DSCFM	40 %I

$$V_m \text{ Std.} = Y_m \frac{17.64 \times V_m \left(P \text{ Bar.} + \frac{\Delta H}{13.6}\right)}{(T_m + 460)}$$

$$\%M = \frac{100 \times V_{w_{gas}}}{V_m \text{ Std.} + V_{w_{gas}}}$$

$$V_{w_{gas}} = 0.0471\ V_w$$

$$M_d = \frac{100 - \%M}{100}$$

$$MW_d = \%CO_2 \times .44 + (\%O_2 \times .32) + (\%CO + \%N_2) \times .28 + \left(\%\text{Other} \times \frac{\text{Mol. wt.}}{100}\right)$$

$$MW = MW_d \times M_d + 18(1 - M_d)$$

$$P_s = P \text{ Bar.} \pm \frac{P_{st}}{13.6}$$

$$V_s = 85.49 \times C_p \sqrt{\Delta P_s (T_s + 460)} \left[\frac{1}{P_s \times MW}\right]^{1/2}$$

$$\%I = \frac{0.09450 \times (T_s + 460) \times V_m \text{ Std.}}{P_s \times T_t \times P_s \times M_d \times A_n}$$

N_p = Total No. of Sampling points

Y_m = Meter Box Correction Factor

ΔH = Average Orfice Pressure Drop, inches H_2O

P Bar. = Barometric Pressure, Inches Hg, Absolute

V_m = Volume of Dry Gas at Meter Conditions, DCF

T_m = Average Meter Temperature, °F.

V_m Std. = Volume of Dry Gas at STP. DSCF[a]

% = Per Cent other gas removed before Dry Gas Meter

P_{st} = Static Pressure of Stack Gas, inches H_2O

P_s = Stack Gas Pressure, inches Hg.

T_s = Average Stack Temperature, °F

VP = Vapor Pressure of H_2O At Stack Temperature

V_w = Total H_2O Collected in Impingers and Silica Gel

$V_{w_{gas}}$ = Volumn of water vapor collected at STP, SCF[b]

%M = Per Cent Moisture by volume

M_d = Mole Fraction of Dry Gas

$\%CO_2$ = Volume % Dry

$\%O_2$ = Volume % Dry

$\%N_2$ = Volume % Dry

%CO = Volume % Dry

MW_d = Molecular Weight of Stack Gas Dry Basis

MW = Molecular Weight of Stack Gas, Wet Basis

C_p = Pitot Tube Coefficient

$\sqrt{\Delta P_s (T_s + 460)}$ is determined by averaging the square root of the product of the velocity head (P_s) and the absolute stack temperature from each sampling point.

T_t = Net time of test in minutes

D_n = Sampling Nozzle Diameter, inches

A_n = Area of Nozzle opening, ft^2.

V_s = Stack Gas Velocity at Stack Conditions, Feet per second.

D_s = Diameter of Stack, inches

Area = Area of duct in ft^2

ACFM = Actual Cubic Feet per minute

DSCFM = Dry Standard Cubic Feet per minute

%I = Per Cent Isokinetic

[a] Dry Standard Cubic Feet @ 68°F, 29.92 in. Hg.

[b] Standard Conditions @ 68°F. 29.92 in. Hg.

(2)

890910

Engineering-Science, Pasadena, California

Plant: DAC LB BLDG #3
Source: TANK 353
Date: 9/7/89
Run: ANTI-MIST-1
Standard Temp = 60 deg F Standard Press = 29.92 in Hg

FLOW DATA

STACK DIAMETER (inches)	9.00
STACK CROSS-SECTIONAL AREA (sq feet)	0.44
BAROMETRIC PRESSURE (inches Hg)	28.60
OXYGEN CONTENT (%)	21.0
CARBON DIOXIDE CONTENT (%)	0.0
MOISTURE CONTENT (%)	1.6
STACK TEMPERATURE (deg F)	74
STACK STATIC PRESSURE (inches water)	0.80
DRY STACK GAS MOLECULAR WEIGHT	28.84
VELOCITY PRESSURE (sq rt inches water)	0.66
PITOT TUBE CORRECTION FACTOR	0.84
VELOCITY (ft per sec)	38.21
EXHAUST GAS FLOW RATE (ACFM)	1,013
EXHAUST GAS FLOW RATE (DSCFM)	929

SAMPLING DATA

DRY GAS VOLUME SAMPLED (DCF)	136.025
DRY GAS VOLUME SAMPLED (DSCF)	124.602
DRY GAS METER TEMPERATURE (deg F)	83
DRY GAS METER GAMMA	0.99
AVERAGE ORIFICE PRESSURE (inches water)	4.20
TOTAL RUN TIME (min)	120
NOZZLE DIAMETER (inches)	0.306
ISOKINETIC (%)	96.7

LABORATORY DATA

MOISTURE RECOVERED (mls)	44.20 ✓
10^{-4} Cr ~~PARTIC~~. FROM NOZ., PROBE & WASHES (mg)	18.00
PARTICULATE FROM FILTER (mg)	0.00
10^{-4} Cr ~~PARTICULATE~~ FROM IMPINGERS (mg)	466.00 ✓

PARTICULATE DATA

FRONT HALF	(gr/DSCF)	0.0022
	(gr/ACF)	0.0020
10^{-4} Cr	(lb/hr)	0.02
BACK HALF	(gr/DSCF)	0.0577
	(gr/ACF)	0.0530
10^{-4} Cr	(lb/hr)	0.46
TOTAL	~~(gr/DSCF)~~	~~0.0599~~
	~~(gr/ACF)~~	~~0.0550~~
	~~(lb/hr)~~	~~0.48~~

Table 4

89 UB104

Engineering-Science, Pasadena, California

Plant: DAC LB BLDG #5
Source: TANK #541
Date: 8/31/89
Run: UNCONTROLLED
Standard Temp = 60 deg F Standard Press = 29.92 in Hg

FLOW DATA

STACK LENGTH (inches)	82.00
STACK WIDTH (inches)	34.00
STACK CROSS-SECTIONAL AREA (sq feet)	19.36
BAROMETRIC PRESSURE (inches Hg)	29.10
OXYGEN CONTENT (%)	21.0
CARBON DIOXIDE CONTENT (%)	0.0
MOISTURE CONTENT (%) SATURATED	2.8
STACK TEMPERATURE (deg F)	73
STACK STATIC PRESSURE (inches water)	-0.80
DRY STACK GAS MOLECULAR WEIGHT	28.84
VELOCITY PRESSURE (sq rt inches water)	0.15
PITOT TUBE CORRECTION FACTOR	0.84
VELOCITY (ft per sec)	8.64
EXHAUST GAS FLOW RATE (ACFM)	10,034
EXHAUST GAS FLOW RATE (DSCFM)	9,234

SAMPLING DATA

DRY GAS VOLUME SAMPLED (DCF)	34.310
DRY GAS VOLUME SAMPLED (DSCF)	30.476
DRY GAS METER TEMPERATURE (deg F)	94
DRY GAS METER GAMMA	0.97
AVERAGE ORIFICE PRESSURE (inches water)	1.22
TOTAL RUN TIME (min)	60
NOZZLE DIAMETER (inches)	~~0.469~~
ISOKINETIC (%)	88.8

LABORATORY DATA

MOISTURE RECOVERED (mls)	22.90
10^{-4} Cr6 ~~PARTIC.~~ FROM NOZ., PROBE & WASHES (mg)	< 23.00
PARTICULATE FROM FILTER (mg)	0.00
10^{-4} Cr ~~PARTICULATE~~ FROM IMPINGERS (mg)	23.00

PARTICULATE DATA

Cr hex	~~FRONT~~ HALF	(gr/DSCF)	0.0116
		(gr/ACF)	0.0107
10^{-4} mg/hr	Cr total	(lb/hr)	< 0.92
	~~BACK~~ HALF	(gr/DSCF)	0.0116
		(gr/ACF)	0.0107
		(lb/hr)	0.92
10^{-4} mg/hr	TOTAL	~~(gr/DSCF)~~	~~0.0233~~
		~~(gr/ACF)~~	~~0.0214~~
		~~(lb/hr)~~	~~1.84~~

Anti Mist 1

(3)

ASN "MASSFLO" 15
XROM "MASSFLO"

Engineering-Science, Pasadena, Califor

RUN NUMBER
RUN

Plant: DAC LB BLDG #3
Source: TANK 353
Date: 9/7/89
Run: ANTI-MIST-1
Standard Temp = 60 deg F Standard Press

VOL MTR STD ?
124.6820 RUN
STACK DSCFM ?
929.0000 RUN
FRONT 1/2 MG ?
.0018 RUN
BACK 1/2 MG ?
.0466 RUN

FLOW DATA

STACK DIAMETER (inches)	
STACK CROSS-SECTIONAL AREA (sq feet)	
BAROMETRIC PRESSURE (inches Hg)	F GR/DSCF = 2.2293E-7
OXYGEN CONTENT (%)	F MG/MMM = 0.0005
CARBON DIOXIDE CONTENT (%)	F LB/HR = 1.7752E-6
MOISTURE CONTENT (%)	F KG/HR = 8.0522E-7
STACK TEMPERATURE (deg F)	
STACK STATIC PRESSURE (inches water)	B GR/DSCF = 5.7715E-6
DRY STACK GAS MOLECULAR WEIGHT	B MG/MMM = 0.0132
VELOCITY PRESSURE (sq rt inches water)	B LB/HR = 4.5957E-5
PITOT TUBE CORRECTION FACTOR	B KG/HR = 2.0846E-5
VELOCITY (ft per sec)	38.21
EXHAUST GAS FLOW RATE (ACFM)	1,013
EXHAUST GAS FLOW RATE (DSCFM)	929

SAMPLING DATA

DRY GAS VOLUME SAMPLED (DCF)	136.025
DRY GAS VOLUME SAMPLED (DSCF)	124.602
DRY GAS METER TEMPERATURE (deg F)	83
DRY GAS METER GAMMA	0.99
AVERAGE ORIFICE PRESSURE (inches water)	4.20
TOTAL RUN TIME (min)	120
NOZZLE DIAMETER (inches)	0.306
ISOKINETIC (%)	96.7

LABORATORY DATA

MOISTURE RECOVERED (mls)	44.20 ✓
10^{-4} Cr6 ~~PARTIC~~. FROM NOZ., PROBE & WASHES (mg)	18.00
PARTICULATE FROM FILTER (mg)	0.00
10^{-4} Cr ~~PARTICULATE~~ FROM IMPINGERS (mg)	466.00 ✓

PARTICULATE DATA

FRONT HALF	(gr/DSCF)	0.0022
	(gr/ACF)	0.0020
10^{-4} Cr6	(lb/hr)	0.02
BACK HALF	(gr/DSCF)	0.0577
	(gr/ACF)	0.0530
10^{-4} Cr	(lb/hr)	0.46
TOTAL	~~(gr/DSCF)~~	~~0.0577~~
	~~(gr/ACF)~~	~~0.0550~~
	~~(lb/hr)~~	~~0.48~~

T GR/DSCF = 5.9944E-6

Uncontrol

89 U810Y

XROM "MASSFLO"

RUN NUMBER RUN

VOL MTR STD ?
30.476 RUN

STACK DSCFM ?
9,234.00 RUN

FRONT 1/2 MG ?
.0023 RUN

BACK 1/2 MG ?
.0023 RUN

F GR/DSCF = 1.16E-6
F MG/MMM = 2.67E-3
F LB/HR = 9.22E-5

Engineering-Science, Pasadena, California

: DAC LB BLDG #5
e: TANK #541
8/31/89
UNCONTROLLED

ard Temp = 60 deg F Standard Press = 29.92 in Hg

FLOW DATA

TACK LENGTH (inches)	82.00
TACK WIDTH (inches)	34.00
TACK CROSS-SECTIONAL AREA (sq feet)	19.36
AROMETRIC PRESSURE (inches Hg)	29.10
XYGEN CONTENT (%)	21.0
CARBON DIOXIDE CONTENT (%)	0.0
MOISTURE CONTENT (%) SATURATED	2.8
STACK TEMPERATURE (deg F)	73
STACK STATIC PRESSURE (inches water)	-0.80
DRY STACK GAS MOLECULAR WEIGHT	28.84
VELOCITY PRESSURE (sq rt inches water)	0.15
PITOT TUBE CORRECTION FACTOR	0.84
VELOCITY (ft per sec)	8.64
EXHAUST GAS FLOW RATE (ACFM)	10,034
EXHAUST GAS FLOW RATE (DSCFM)	9,234

SAMPLING DATA

DRY GAS VOLUME SAMPLED (DCF)	34.310
DRY GAS VOLUME SAMPLED (DSCF)	30.476
DRY GAS METER TEMPERATURE (deg F)	94
DRY GAS METER GAMMA	0.97
AVERAGE ORIFICE PRESSURE (inches water)	1.22
TOTAL RUN TIME (min)	60
NOZZLE DIAMETER (inches)	~~0.469~~
ISOKINETIC (%)	88.8

LABORATORY DATA

MOISTURE RECOVERED (mls)	22.90
10^{-4} Cr6 ~~PARTIC.~~ FROM NOZ., PROBE & WASHES (mg)	< 23.00
PARTICULATE FROM FILTER (mg)	0.00
10^{-4} Cr ~~PARTICULATE~~ FROM IMPINGERS (mg)	23.00

PARTICULATE DATA

Cr hex

	~~FRONT~~ HALF	(gr/DSCF)	0.0116
		(gr/ACF)	0.0107
10^{-4} mg/hr	Cr total	(lb/hr)	< 0.92
	~~BACK~~ HALF	(gr/DSCF)	0.0116
		(gr/ACF)	0.0107
		(lb/hr)	0.92
10^{-4} mg/hr	TOTAL	~~(gr/DSCF)~~	~~0.0233~~
		~~(gr/ACF)~~	~~0.0214~~
		~~(lb/hr)~~	~~1.84~~

SUMMARY OF EMISSIONS

PLANT Douglas Aircraft (Enclosure 2 Reference B) LOCATION Cypress, California

SAMPLED SOURCE Anodizing & Etching @ Buildings 3 & 5 - Long Beach, California

	RUN	DATE	(1) V_m Std.	(2) DSCFM	FRONT HALF MILLIGRAMS PROBE	CYCLONE	FILTER	Hex (3) ~~TOTAL~~	Total (4) ~~BACK HALF~~	5 FRONT + BACK TOTAL
890810A	Uncontrol	31 Aug 89	30.476	9234			<	.0023	.0023	
890920	Uncontrol B	12 Sep 89	53.341	7609				1.3675	1.6545	

CONCENTRATIONS

RUN	FRONT HALF Gr/DSCF	Mg/M³	Lb/Hr	Kg/Hr	BACK HALF Gr/DSCF	Mg/M³	Lb/Hr	Kg/Hr	TOTAL Gr/DSCF	Mg/M³	Lb/Hr	Kg/Hr
		.00267	9.22×10^{-5}			.00267	9.22×10^{-5}					
		.9053	.0258			1.095	.03122					
	6	7	8	9	10	17	18	19	20	21	22	23

Remarks:

SAMPLING SUMMARY SHEET

PLANT _____ LOCATION _____

SAMPLED SOURCE _____

Run	Date	N_p	3 Y_m	4 ΔH	5 P Bar.	6 V_m	7 T_m	8 V_m Std.	9 %	10 P_{st}	17 P_s	18 T_s	19 VP	20 V_w	21 $V_{w_{gas}}$	22 %M	23 M_d

Run	24 CO_2	25 O_2	26 N_2	27 CO	28 ___	29 MW_d	30 MW	31 C_p	32 $\sqrt{\Delta P_s (T_s + 460)}$	33 T_t	34 D_n	35 V_s	36 D_s	37 Area	38 ACFM	39 DSCFM	40 %I

$$V_m \text{ Std.} = Y_m \frac{17.64 \times V_m \left(P \text{ Bar.} + \frac{\Delta H}{13.6}\right)}{(T_m + 460)}$$

$$\%M = \frac{100 \times V_{w_{gas}}}{V_m \text{ Std.} + V_{w_{gas}}}$$

$$V_{w_{gas}} = 0.0471\ V_w$$

$$M_d = \frac{100 - \%M}{100}$$

$$MW_d = \%CO_2 \times .44 + (\%O_2 \times .32) + (\%CO + \%N_2) \times .28 + \left(\%\text{Other} \times \frac{\text{Mol. wt.}}{100}\right)$$

$$MW = MW_d \times M_d + 18(1 - M_d)$$

$$P_s = P \text{ Bar.} + \frac{P_{st}}{13.6}$$

$$V_s = 85.49 \times C_p \sqrt{\Delta P_s (T_s + 460)} \left[\frac{1}{P_s \times MW}\right]^{1/2}$$

$$\%I = \frac{0.09450 \times (T_s + 460) \times V_m \text{ Std.}}{V_s \times T_t \times P_s \times M_d \times A_n}$$

N_p = Total No. of Sampling points

Y_m = Meter Box Correction Factor

ΔH = Average Orfice Pressure Drop, inches H_2O

P Bar. = Barometric Pressure, Inches Hg, Absolute

V_m = Volume of Dry Gas at Meter Conditions, DCF

T_m = Average Meter Temperature, °F.

V_m Std. = Volume of Dry Gas at STP, DSCF[a]

% = Per Cent other gas removed before Dry Gas Meter

P_{st} = Static Pressure of Stack Gas, inches H_2O

P_s = Stack Gas Pressure, inches Hg.

T_s = Average Stack Temperature, °F

VP = Vapor Pressure of H_2O At Stack Temperature

V_w = Total H_2O Collected in Impingers and Silica Gel

$V_{w_{gas}}$ = Volume of water vapor collected at STP, SCF[b]

%M = Per Cent Moisture by volume

M_d = Mole Fraction of Dry Gas

$\%CO_2$ = Volume % Dry

$\%O_2$ = Volume % Dry

$\%N_2$ = Volume % Dry

%CO = Volume % Dry

MW_d = Molecular Weight of Stack Gas Dry Basis

MW = Molecular Weight of Stack Gas, Wet Basis

C_p = Pitot Tube Coefficient

$\sqrt{\Delta P_s (T_s + 460)}$ is determined by averaging the square root of the product of the velocity head (P_s) and the absolute stack temperature from each sampling point.

T_t = Net time of test in minutes

D_n = Sampling Nozzle Diameter, inches

A_n = Area of Nozzle opening, ft^2.

V_s = Stack Gas Velocity at Stack Conditions, Feet per second.

D_s = Diameter of Stack, inches

Area = Area of duct in ft^2

ACFM = Actual Cubic Feet per minute

DSCFM = Dry Standard Cubic Feet per minute

%I = Per Cent Isokinetic

[a] Dry Standard Cubic Feet @ 68°F, 29.92 in. Hg.

[b] Standard Conditions @ 68°F. 29.92 in. Hg.

(5)

[illegible]

Engineering Testing Laboratory, California

Plant: [illegible]
Unit: [illegible]
Date: [illegible]/12/89
Run: UNCONTROLLED (B)
Standard Temp = 60 deg F Standard Press = 29.92 in Hg

FLOW DATA

STACK LENGTH (inches)	[illegible]
STACK WIDTH (inches)	[illegible]
STACK CROSS-SECTIONAL AREA (sq feet)	[illegible]
BAROMETRIC PRESSURE (inches Hg)	[illegible]
OXYGEN CONTENT (%)	21.0
CARBON DIOXIDE CONTENT (%)	0.0
MOISTURE CONTENT (%)	[illegible]
STACK TEMPERATURE (deg F)	[illegible]
STACK STATIC PRESSURE (inches water)	-0.72
DRY STACK GAS MOLECULAR WEIGHT	28.84
VELOCITY PRESSURE (sq rt delta water)	0.26
PITOT TUBE CORRECTION FACTOR	0.84
VELOCITY (ft per sec)	[illegible]
EXHAUST GAS FLOW RATE (ACFM)	8,745
EXHAUST GAS FLOW RATE (DSCFM)	7,583

SAMPLING DATA

DRY GAS VOLUME SAMPLED (DCF)	56.028
DRY GAS VOLUME SAMPLED (DSCF)	51.222
DRY GAS METER TEMPERATURE (deg F)	82
DRY GAS METER GAMMA	1.01
AVERAGE ORIFICE PRESSURE (inches water)	0.66
TOTAL RUN TIME (min)	120
NOZZLE DIAMETER (inches)	0.310
ISOKINETIC (%)	101.4

LABORATORY DATA

MOISTURE REMOVED (ml)	28.60
10^{-4} cr ~~PARTIC.~~ FROM NOZ., PROBE & WASHES (mg)	13970.00
PARTICULATE FROM FILTER (mg)	
10^{-4} cr ~~PARTICULATE~~ FROM IMPINGERS (mg)	16704.00

PARTICULATE DATA

FRONT HALF	(gr/DSCF)	4.2963
	(gr/ACF)	3.6516
10^{-4} cr	(lb/hr)	273.61
BACK HALF	(gr/DSCF)	5.0819
	(gr/ACF)	4.3663
10^{-4} cr	(lb/hr)	[illegible]
TOTAL	(gr/DSCF)	[illegible]
	(gr/ACF)	[illegible]
	(lb/hr)	[illegible]

Table 5

890920

Engineering-Science, Pasadena, California

Plant: DAC LB BLDG #5
Source: TANK 534
Date: 9/12/89
Run: UNCONTROLLED (A)
Standard Temp = 60 deg F Standard Press = 29.92 in Hg

FLOW DATA

STACK LENGTH (inches)	40.00
STACK WIDTH (inches)	34.00
STACK CROSS-SECTIONAL AREA (sq feet)	9.44
BAROMETRIC PRESSURE (inches Hg)	28.18
OXYGEN CONTENT (%)	21.0
CARBON DIOXIDE CONTENT (%)	0.0
MOISTURE CONTENT (%)	2.2
STACK TEMPERATURE (deg F)	89
STACK STATIC PRESSURE (inches water)	-0.72
DRY STACK GAS MOLECULAR WEIGHT	28.84
VELOCITY PRESSURE (sq rt inches water)	0.26
PITOT TUBE CORRECTION FACTOR	0.84
VELOCITY (ft per sec)	15.42
EXHAUST GAS FLOW RATE (ACFM)	8,740
EXHAUST GAS FLOW RATE (DSCFM)	7,609

SAMPLING DATA

DRY GAS VOLUME SAMPLED (DCF)	61.311
DRY GAS VOLUME SAMPLED (DSCF)	53.341
DRY GAS METER TEMPERATURE (deg F)	87
DRY GAS METER GAMMA	0.97
AVERAGE ORIFICE PRESSURE (inches water)	0.67
TOTAL RUN TIME (min)	120
NOZZLE DIAMETER (inches)	0.315
ISOKINETIC (%)	102.0

LABORATORY DATA

MOISTURE RECOVERED (mls)	26.10
10^{-4} Cr^6 ~~PARTIC.~~ FROM NOZ., PROBE & WASHES (mg)	13675.00
PARTICULATE FROM FILTER (mg)	0.00
10^{-4} Cr ~~PARTICULATE~~ FROM IMPINGERS (mg)	16614.00

16654

PARTICULATE DATA

FRONT HALF	(gr/DSCF)	3.9558
	(gr/ACF)	3.4439
10^{-4} Cr^6	(lb/hr)	258.07
BACK HALF	(gr/DSCF)	4.8059
	(gr/ACF)	4.1841
10^{-4} Cr	(lb/hr)	~~312.53~~ = 314.18
TOTAL	~~(gr/DSCF)~~	~~8.7617~~
	~~(gr/ACF)~~	~~7.6277~~
	~~(lb/hr)~~	~~571.61~~

Table 3

Uncontrol B

XROM "MASSFLO"

Engineering-S ... fornia

89097D

RUN NUMBER

Plant: DAC L ... RUN
Source: TANK
Date: 9/12/
Run: UNCON
Standard Temp = 60 ... ess = 29.92 in Hg

VOL MTR STD ?
53.341000 RUN
STACK DSCFM ?
7,609.000000 RUN
FRONT 1/2 MG ?
1.367500 RUN
BACK 1/2 MG ?
1.654500 RUN

F GR/DSCF = 0.000396
F MG/MMM = 0.905343
F LB/HR = 0.025803
F KG/HR = 0.011704

B GR/DSCF = 0.000479
B MG/MMM = 1.095349
B LB/HR = 0.031218
B KG/HR = 0.014161

STACK LENGTH	40.00
STACK WIDTH (	34.00
STACK CROSS-S)	9.44
BAROMETRIC PF	28.18
OXYGEN CONTEN	21.0
CARBON DIOXII	0.0
MOISTURE CONT	2.2
STACK TEMPER	89
STACK STATIC)	-0.72
DRY STACK GAS	28.84
VELOCITY PRES er)	0.26
PITOT TUBE C(	0.84
VELOCITY (ft per sec)	15.42
EXHAUST GAS FLOW RATE (ACFM)	8,740
EXHAUST GAS FLOW RATE (DSCFM)	7,609

SAMPLING DATA

DRY GAS VOLUME SAMPLED (DCF)	61.311
DRY GAS VOLUME SAMPLED (DSCF)	53.341
DRY GAS METER TEMPERATURE (deg F)	87
DRY GAS METER GAMMA	0.97
AVERAGE ORIFICE PRESSURE (inches water)	0.67
TOTAL RUN TIME (min)	120
NOZZLE DIAMETER (inches)	0.315
ISOKINETIC (%)	102.0

LABORATORY DATA

MOISTURE RECOVERED (mls)	26.10
10^{-4} Cr^6 ~~PARTIC.~~ FROM NOZ., PROBE & WASHES (mg)	13675.00
PARTICULATE FROM FILTER (mg)	0.00
10^{-4} Cr ~~PARTICULATE~~ FROM IMPINGERS (mg)	16614.00

16654 N

PARTICULATE DATA

FRONT HALF	(gr/DSCF)	3.9558
	(gr/ACF)	3.4439
10^{-4} Cr^6	(lb/hr)	258.07
BACK HALF	(gr/DSCF)	4.8059
	(gr/ACF)	4.1841
10^{-4} Cr	(lb/hr)	~~313.53~~ = 314.18
TOTAL	~~(gr/DSCF)~~	~~8.7617~~
	~~(gr/ACF)~~	~~7.6277~~
	~~(lb/hr)~~	~~571.61~~

(5)

Uncontrol.

B FROM "MASSFLO"

89-497

RUN NUMBER

RUN

Plant

Date:

Run:

Stand.

VOL MTR STD ?
51.222000 RUN

STACK DSCFM ?
7,588.000000 RUN

FRONT 1/2 MG ?
1.397000 RUN

BACK 1/2 MG ?
1.659700 RUN

Standard Press = 29.92 in Hg

DATA

	41.00
	21.00
RDA (deg from)	[illegible]
ches Hg)	21.15
	21.0
(%)	0.0
	2.5
)	[illegible]
inches water)	-0.72
WEIGHT	28.94
inches water)	0.26
ACTOR	0.84
Velocity (ft per sec)	[illegible]
EXHAUST GAS FLOW RATE (ACFM)	8,745
EXHAUST GAS FLOW RATE (DSCFM)	7,588

SAMPLING DATA

DRY GAS VOLUME SAMPLED (DCF)	56.028
DRY GAS VOLUME SAMPLED (DSCF)	51.222
DRY GAS METER TEMPERATURE (deg F)	82
DRY GAS METER GAMMA	1.01
AVERAGE ORIFICE PRESSURE (inches water)	0.66
TOTAL RUN TIME (min)	120
NOZZLE DIAMETER (inches)	0.310
ISOKINETIC (%)	101.4

LABORATORY DATA

MOISTURE REMOVED (ml)	28.50
10^{-4} cr ~~PARTIC.~~ FROM NOZ., PROBE & WASHES (mg)	13970.00
PARTICULATE FROM FILTER (mg)	
10^{-4} cr ~~PARTICULATE~~ FROM IMPINGERS (mg)	16704.00

PARTICULATE DATA

FRONT HALF	(gr/DSCF)	1.2083
	(gr/ACF)	3.6516
10^{-4} cr	(lb/hr)	273.51
BACK HALF	(gr/DSCF)	5.0319
	(gr/ACF)	4.3663
10^{-4} cr	(lb/hr)	[illegible]
TOTAL	(gr/DSCF)	[illegible]
	(gr/ACF)	[illegible]
	(lb/hr)	[illegible]

SUMMARY OF EMISSIONS

PLANT Douglas Aircraft (Enclosure 2 - Reference B) LOCATION Cypress, California

SAMPLED SOURCE Anodizing & Etching @ Buildings 3 & 5 - Long Beach, California

	RUN	DATE	1 V_m Std.	2 DSCFM	FRONT HALF MILLIGRAMS PROBE	CYCLONE	FILTER	Hex 3 ~~TOTAL~~	Total 4 ~~BACK HALF~~	5 FRONT + BACK TOTAL
890921	Uncontrol B	12 Sep 89	51.222	7588				1.3970	1.6597	
890851	Uncontrol	21 Aug 89	46.032	1369				.2086	.2281	

CONCENTRATIONS

RUN	FRONT HALF Gr/DSCF	Mg/M³	Lb/Hr	Kg/Hr	BACK HALF Gr/DSCF	Mg/M³	Lb/Hr	Kg/Hr	TOTAL Gr/DSCF	Mg/M³	Lb/Hr	Kg/Hr
		.9631	.02737			1.1442	.0325					
		.1600	.000821			.1750	.000897					
	6	7	8	9	10	17	18	19	20	21	22	23

Remarks:

SAMPLING SUMMARY SHEET

PLANT _____ LOCATION _____

SAMPLED SOURCE _____

Run	Date	N_p	3 Y_m	4 ΔH	5 P Bar.	6 V_m	7 T_m	8 V_m Std.	9 %	10 P_{st}	17 P_s	18 T_s	19 VP	20 V_w	21 $V_{w_{gas}}$	22 %M	23 M_d

Run	24 CO_2	25 O_2	26 N_2	27 CO	28 ___	29 MW_d	30 MW	31 C_p	32 $\sqrt{\Delta P_s (T_s + 460)}$	33 T_t	34 D_n	35 V_s	36 D_s	37 Area	38 ACFM	39 DSCFM	40 %I

$$V_m \text{ Std.} = Y_m \frac{17.64 \times V_m \left(P \text{ Bar.} + \frac{\Delta H}{13.6}\right)}{(T_m + 460)}$$

$$\%M = \frac{100 \times V_{w_{gas}}}{V_m \text{ Std.} + V_{w_{gas}}}$$

$$V_{w_{gas}} = 0.0471\ V_w$$

$$M_d = \frac{100 - \%M}{100}$$

$$MW_d = \%CO_2 \times .44 + (\%O_2 \times .32) + (\%CO + \%N_2) \times .28 + \left(\%\text{Other} \times \frac{\text{Mol. wt.}}{100}\right)$$

$$MW = MW_d \times M_d + 18(1 - M_d)$$

$$P_s = P \text{ Bar.} + \frac{P_{st}}{13.6}$$

$$V_s = 85.49 \times C_p \sqrt{\Delta P_s (T_s + 460)} \left[\frac{1}{P_s \times MW}\right]^{1/2}$$

$$\%I = \frac{0.09450 \times (T_s + 460) \times V_m \text{ Std.}}{V_s \times T_t \times P_s \times M_d \times A_n}$$

N_p = Total No. of Sampling points

Y_m = Meter Box Correction Factor

ΔH = Average Orfice Pressure Drop, inches H_2O

P Bar. = Barometric Pressure, inches Hg, Absolute

V_m = Volume of Dry Gas at Meter Conditions, DCF

T_m = Average Meter Temperature, °F.

V_m Std. = Volume of Dry Gas at STP. DSCF[a]

% = Per Cent other gas removed before Dry Gas Meter

P_{st} = Static Pressure of Stack Gas, inches H_2O

P_s = Stack Gas Pressure, inches Hg.

T_s = Average Stack Temperature, °F

VP = Vapor Pressure of H_2O At Stack Temperature

V_w = Total H_2O Collected in Impingers and Silica Gel

$V_{w_{gas}}$ = Volume of water vapor collected at STP, SCF[b]

%M = Per Cent Moisture by volume

M_d = Mole Fraction of Dry Gas

$\%CO_2$ = Volume % Dry

$\%O_2$ = Volume % Dry

$\%N_2$ = Volume % Dry

%CO = Volume % Dry

MW_d = Molecular Weight of Stack Gas Dry Basis

MW = Molecular Weight of Stack Gas, Wet Basis

C_p = Pitot Tube Coefficient

$\sqrt{\Delta P_s (T_s + 460)}$ Is determined by averaging the square root of the product of the velocity head (P_s) and the absolute stack temperature from each sampling point.

T_t = Net time of test in minutes

D_n = Sampling Nozzle Diameter, inches

A_n = Area of Nozzle opening, ft^2.

V_s = Stack Gas Velocity at Stack Conditions, Feet per second.

D_s = Diameter of Stack, inches

Area = Area of duct in ft^2

ACFM = Actual Cubic Feet per minute

DSCFM = Dry Standard Cubic Feet per minute

%I = Per Cent Isokinetic

[a] Dry Standard Cubic Feet @ 68°F, 29.92 in. Hg.

[b] Standard Conditions @ 68°F. 29.92 in. Hg.

Table (1)

890851

Engineering-Science, [illegible] Tennis

Plant: DAC LB Bldg 3
Source: TANK 370
Date: 8-21-87
Run: UNCONTROLLED
Standard Temp = 60 deg F Standard Press = 29.92 [illegible]

FLOW DATA

STACK DIAMETER (inches)	[illegible]
STACK CROSS SECTIONAL AREA (sq ft)	1.20
BAROMETRIC PRESSURE (inches hg)	29.68
OXYGEN CONTENT (%)	21.[illegible]
CARBON DIOXIDE CONTENT (%)	0.0
MOISTURE CONTENT (%)	[illegible]
STACK TEMPERATURE (deg F)	76
STACK STATIC PR (in. water)	[illegible]
DRY STACK GAS MOLECULAR WEIGHT	[illegible]
VELOCITY PRESSURE (sq ft [illegible])	[illegible]
PITOT TUBE CORRECTION FACTOR	[illegible]
VELOCITY (ft per sec)	[illegible]
EXHAUST GAS FLOW RATE (ACFM)	1,466
EXHAUST GAS FLOW RATE (DSCFM)	[illegible] → 1,069

SAMPLING DATA

DRY GAS VOLUME SAMPLED (DCF)	46.[illegible]
DRY GAS VOLUME SAMPLED (DSCF)	44.332
DRY GAS METER TEMPERATURE (deg F)	54
DRY GAS METER GAMMA	0.99
AVERAGE ORIFICE PRESSURE (inches water)	1.99
TOTAL RUN TIME (min)	[illegible]
NOZZLE DIAMETER (inches)	0.244
ISOKINETIC (%)	97.3

LABORATORY DATA

MOISTURE RECOVERED (mls)	24.60
10^{-3} Cr^{6} ~~PARTIC.~~ FROM NOZ., PROBE & WASHES (mg)	208.60
PARTICULATE FROM FILTER (mg)	0.00
10^{-3} Cr ~~PARTICULATE~~ FROM IMPINGERS (mg)	228.10

PARTICULATE DATA

FRONT HALF	(gr/DSCF)	0.0677
	(gr/ACF)	0.0657
10^{-3} Cr^{6}	(lb/hr)	0.82
BACK HALF	(gr/DSCF)	0.[illegible]
	(gr/ACF)	0.0718
10^{-3} Cr	(lb/hr)	[illegible]
TOTAL	~~[illegible]~~	~~[illegible]~~
	~~[illegible]~~	~~[illegible]~~
	~~[illegible]~~	~~[illegible]~~

890851

FROM "MASSFLO"

RUN NUMBER

RUN

VOL MTR STD ?
46.032000 RUN
STACK DSCFM ?
1,369.000000 RUN
FRONT 1/2 MG ?
.208600 RUN
BACK 1/2 MG ?
.228100 RUN

F GR/DSCF = 0.000070
F MG/MMM = 0.160030
F LB/HR = 0.000821
F KG/HR = 0.000372

B GR/DSCF = 0.000076
B MG/MMM = 0.174990
B LB/HR = 0.000897
B KG/HR = 0.000407

Engineering-Science, [illegible] Cumis

DAC LB Rlelg 3
TANK 370
8-21-87
UNCONTROLLED
Temp = 60 deg F Standard Press = 29.92 in Hg

FLOW DATA

NOZZLE DIAMETER (inches)	[illegible]
NOZ CROSS SECTIONAL AREA (sq ft)	[illegible]
BAROMETRIC PRESSURE (inches Hg)	27.66
OXYGEN CONTENT (%)	21.1
CARBON DIOXIDE CONTENT (%)	0.0
MOISTURE CONTENT (%)	[illegible]
STACK TEMPERATURE (deg F)	76
STACK STATIC PRESSURE (in H2O vacuum)	[illegible]
DRY STACK GAS MOLECULAR WEIGHT	[illegible]
VELOCITY PRESSURE (sq in inches water)	[illegible]
PITOT TUBE CORRECTION FACTOR	[illegible]
VELOCITY (ft per sec)	[illegible]
EXHAUST GAS FLOW RATE (ACFM)	[illegible]
EXHAUST GAS FLOW RATE (DSCFM)	[illegible] → 1,369

SAMPLING DATA

DRY GAS VOLUME SAMPLED (DCF)	46.937
DRY GAS VOLUME SAMPLED (DSCF)	45.332
DRY GAS METER TEMPERATURE (deg F)	84
DRY GAS METER GAMMA	0.99
AVERAGE ORIFICE PRESSURE (inches water)	1.99
TOTAL RUN TIME (min)	[illegible]
NOZZLE DIAMETER (inches)	0.244
ISOKINETIC (%)	97.3

LABORATORY DATA

MOISTURE RECOVERED (mls)	24.60
~~PARTIC.~~ FROM NOZ., PROBE & WASHES (mg)	208.60
PARTICULATE FROM FILTER (mg)	0.00
~~PARTICULATE~~ FROM IMPINGERS (mg)	228.10

10^{-3} Cr^6

10^{-3} Cr

PARTICULATE DATA

FRONT HALF	(gr/DSCF)	0.0679
	(gr/ACF)	0.0657
	(lb/hr)	0.82
BACK HALF	(gr/DSCF)	[illegible]
	(gr/ACF)	0.0734
	(lb/hr)	[illegible]
TOTAL		[illegible]
		[illegible]
		[illegible]

10^{-3} Cr^6

10^{-3} Cr

APPENDIX B

FIELD DATA
ES LAB RECOVERY SHEETS

TANK 370 VGN ✓

3.94 D ✓

ES ENGINEERING-SCIENCE COMPANIES

FIELD DATA

890557

Plant McDonnell Douglas
Date 8/21/89
Test Site Anodizing Tanks ✓
Run Number 1
Operator RR/JG/MB

Ambient Temp 75
Barometer 29.60
Stack Pressure -1.0
Stack H2O % 2
Stack Dia 10½

Meter ΔH@ 1.92
Meter Gamma 0.99
Meter Box # Blue #2
Nozzle Diameter 0.244
Probe Length 12"

Probe Mat'l Teflon
Filter Number No Tare/Teflon
Samp Box # NA
PRE LEAK 0.001 @ 12"
POST LEAK

TRAVERSE POINT NUMBER	ELAPSED TIME (mins)	CLOCK TIME	GAS METER READING (Vm)	VELOCITY HEAD (delta p)	ORIFICE PRESSURE (delta H, "H2O) Desired	Actual	TEMPERATURES STACK (Ts)	METER ~~INLET~~ TEMP	~~METER OUT~~ TANK TEMP	IMPINGER	FILTER VOLTS	AMPS	PUMP VAC. "Hg
1	0	1440	056.273	0.62	2.45	2.45	77	82	80	59	18	65	8
2	4	1444	059.7	0.58	2.29	2.30	77	82	80	49	18.5	60	8
3	8	1448	062.9	0.54	2.13	2.15	77	82	80	47	18.5	55	7
4	12	1452	066.1	0.50	1.97	1.95	76	83	80	50	18.8	55	7
5	16	1456	068.9	0.54	2.13	2.15	75	84	80	54	18.8	50	8
6	20	1500	072.1	0.58	2.29	2.30	76	84	82	57	18.9	40	8
7	24	1504	075.4	0.59	2.33	2.35	75	84	82	60	18.9	40	8
8	28	1508	078.7	0.59	2.33	2.35	76	84	82	62	18.9	40	8
	32	1512	082.074	PORT CHANGE			UPPER → LOWER				18.9	35	
								0.205 mg		= 205.0			
										1hr = 14.6 ✓			
				√Δp									
AVERAGE /SUM	64		48.977	0.707		1.99	76	84					

amps 32.278 amps × 64/60 = 34.43

ES ENGINEERING-SCIENCE COMPANIES

FIELD DATA

SEE 1ST PAGE

Plant McDonnell Douglass
Date 8/21/89
Test Site Anodizing Tank
Run Number 2
Operator TG/RR/MG

Ambient Temp
Barometer
Stack Pressure
Stack H2O %
Stack Dia

Meter ΔH@
Meter Gamma
Meter Box #
Nozzle Diameter
Probe Length

Probe Mat'l
Filter Number
Samp Box #
PRE LEAK
POST LEAK

TRAVERSE POINT NUMBER	ELAPSED TIME (mins)	CLOCK TIME	GAS METER READING (Vm)	VELOCITY HEAD (delta p)	ORIFICE PRESSURE (delta H, "H2O) Desired	Actual	TEMPERATURES STACK (Ts)	METER ~~INLET~~ TEMP	~~METER OUT~~ TANK TEMP	IMPINGER	~~FILTER~~ VOLTS	AMPS	PUMP VAC. "Hg
1	32	1516	082.074	0.52	2.05	2.05	75	88	82	86	19	35	8
2	36	1520	084.5	0.52	2.05	2.05	75	88	82	55	19	30	8
3	40	1524	087.9	0.41	1.62	1.60	75	90	82	54	19	10	7
4	44	1528	090.8	0.42	1.65	1.65	75	90	82	54	19	11	7
5	48	1532	093.7	0.42	1.65	1.65	75	90	82	54	19	11	7
6	52	1536	096.6	0.42	1.65	1.65	75	90	82	54	19	11	7
7	56	1540	099.5	0.40	1.58	1.60	75	90	82	54	19	11	7
8	60	1544	102.3	0.40	1.58	1.60	75	90	82	54	19	11	7
	64	1548	105.200	END	OF	RUN							
AVERAGE /SUM													

2,032 samp min / 60 min = 33.87

RUN #1 UNCONTROLLED

ENGINEERING-SCIENCE, INC.

890851

TRAIN RECOVERY SHEET

DATE 8-21-89 RUN# 1 METHOD 205.1

FACILITY DOUGLAS AIRCRAFT BLD 3 UNCONTROLLED TYPE Chrome Hex

TECHNICIAN RM (8-22-89) IMP. SOLUTION $NaHCO_3$

	SOLUTION	VOL. (ml)	DESCRIPTION
NOZZLE-PROBE RINSE			✓
UMBILICAL RINSE			✓

		FINAL (g)	INITIAL (g)	NET (g)
IMPINGER # 1	$NaHCO_3$	554.6	544.7	9.9 ✓
IMPINGER # 2	$NaHCO_3$	544.8	545.2	-0.4 ✓
IMPINGER # 3	EMPTY	495.8	494.0	1.8 ✓
IMPINGER #				
DESCRIPTION				
IMPINGER RINSE				

		FINAL (g)	INITIAL (g)	
SILICA GEL (DESCRIPTION)	1/4 SILICA USED	888.8	875.5	13.3 ✓
FILTER# (DESCRIPTION)		TOTAL MOISTURE		24.6 (g) ✓

FIELD BLANKS

DISPOSITION/COMMENTS

TOTAL VOLUME =

ES ENGINEERING-SCIENCE COMPANIES

FIELD DATA

FOAM & BALLS

Plant: OAC
Date: 8/22/86
Test Site: LONG BEACH
Run Number: BF-1A
Operator: DK

Ambient Temp:
Barometer:
Stack Pressure:
Stack H2O %:
Stack Dia:

Meter ΔH@: 1.73
Meter Gamma: 1.02
Meter Box #: BUB #1 .2375
Nozzle Diameter:
Probe Length: 12"

Probe Mat'l: TEFLON
Filter Number: NO TARE/TEFLON
Samp Box #: N/A
PRE LEAK: 0.005 @ 15
POST LEAK: 0.016 @ 9

TRAVERSE POINT NUMBER TOP	ELAPSED TIME (mins)	CLOCK TIME	GAS METER READING (Vm)	VELOCITY HEAD (delta p)	ORIFICE PRESSURE (delta H, "H2O) Desired	Actual	TEMPERATURES STACK (Ts)	METER ~~INLET~~ TEMP	~~METER~~ OUT TANK	IMPINGER** AMP	VOLTS	FILTER	PUMP VAC. "Hg
1	0	0834	163.200	0.47	1.75	1.6	66	76	80	150 65	18 19	—	7
2	12	0846	171.2	0.47	1.75	1.75	67	76	80	50	19	—	7
3	24	0858	179.5	0.47	1.75	1.75	68	79	80	50	19	—	7
4	36	0910	188.1	0.47	1.75	1.75	68	82	80	42	19	—	8
5	48	0922	196.8	0.47	1.75	1.75	68	86	80	40	19	—	8
*	60	0934	205.446	0.47	1.75	1.75	68	88	84	40	19	—	8
6	60	0940	205.446	0.47	1.75	1.75	68	87	84	100	18	—	8
7	72	0952	214.1	0.47	1.75	1.75	69	89	84	50	18.5	—	8
8	84	1004	222.7	0.47	1.75	1.75	69	90	84	45	18.5	—	8
	96	1016	231.115		PORT CHANGE								
								87					
					CHECK amp						19V		
									55	18	60	=176.38	
										40	8		
AVERAGE /SUM	192		135.650	.686		1.73	70	85					

* CHANGE PARTS RACK

ES ENGINEERING-SCIENCE COMPANIES

Plant DAC - Long Beach
Date 9/22/89
POST LEAK RATE 0.016 @ 9

Page 2 of 2
Run Number ~~[illegible]~~-1A
Operator TG

~~TRAVERSE~~ POINT NUMBER	ELAPSED TIME (mins)	CLOCK TIME	GAS METER READING (Vm)	VELOCITY HEAD (delta p)	ORIFICE PRESSURE (delta H, "H2O) Desired	Actual	TEMPERATURES STACK (Ts)	METER ~~INLET~~	METER OUT	IMPINGER** Volts	Amps	FILTER	PUMP VAC. "Hg
1	96	1025	231.115	.47	1.75	1.75	70	88	85	18	40	—	7
2	108	1037	239.8	.47	1.75	1.75	70	89	85	18	40	—	7
3	120	1049	248.3	.47	1.75	1.75	70	90	85	18	40	—	7
4	132	1101	256.8	.47	1.75	1.75	71	91	85	18	40	—	7
5	144	1113	265.3	.47	1.75	1.75	72	91	88	20	80	—	7
6	156	1125	273.8	.47	1.75	1.75	72	91	91	21	50	—	7
7	168	1137	282.1	.47	1.75	1.75	72	92	91	21	40	—	7
8	180	1149	290.5	.47	1.75	1.75	72	92	91	21	40	—	7
	192	1201	298.940			END							
									9,594 amp-min [1 hr / 60 min]				
											=	159.9	
AVERAGE /SUM													

1105 - RECTIFIER SHUT DOWN
1114 - RECTIFIER BACK ON

ENGINEERING-SCIENCE, INC.

TRAIN RECOVERY SHEET

BF-TOP

DATE 8-11-89

RUN# 2 METHOD 205

FACILITY DAC Bldg 3

TYPE Cr

TECHNICIAN DJ / RR 8-23-89

IMP. SOLUTION NaHCO3

	SOLUTION	VOL. (ml)	DESCRIPTION
NOZZLE-PROBE RINSE			✓
UMBILICAL RINSE			✓

		FINAL (g)	INITIAL (g)	NET (g)
IMPINGER # 1		620.1	610.9	9.2 ✓
IMPINGER # 2		499.6	498.5	1.1 ✓
IMPINGER # 3		594.5	597.8	-3.3
IMPINGER #				
DESCRIPTION				
IMPINGER RINSE				

		FINAL (g)	INITIAL (g)	
SILICA GEL (DESCRIPTION)		819.7	785.9	33.8 ✓
FILTER# (DESCRIPTION)	TEFLON NO TARE	TOTAL MOISTURE		40.8 (g) ✓

FIELD BLANKS

DISPOSITION/COMMENTS

TH 6

TOTAL VOLUME =

0830 BALLS + 10cc FUMM

ES ENGINEERING-SCIENCE COMPANIES

TANK # 370 ANODIZER

BOTTOM

FIELD DATA

Plant McDonnell Douglas
Date 8-22-89 West Port
Test Site Long Beach
Run Number 2 Bottom BF-1-B
Operator HE/RR/TG Chrome

Ambient Temp 77
Barometer
Stack Pressure
Stack H20 % 2
Stack Dia 10½"

Meter ΔH@ 1.92
Meter Gamma 0.99
Meter Box # Blue #2
Nozzle Diameter .2540
Probe Length 12"

Probe Mat'l SS
Filter Number NA
Samp Box # NA
PRE LEAK .001
POST LEAK .001 @ 0

TRAVERSE POINT NUMBER Bottom	ELAPSED TIME (mins)	CLOCK TIME	GAS METER READING (Vm)	VELOCITY HEAD (delta p)	ORIFICE PRESSURE (delta H, "H20) Desired	Actual	TEMPERATURES STACK (Ts)	METER ~~INLET~~	~~METER OUT~~ TANK	IMPINGER	~~BUMPER~~ Volts	Amps	PUMP VAC. "Hg
1	0	0836	110.548	0.47	1.85	1.8	66	82	80	50	18	150	6
2	12	0848	119.0	0.47	1.85	1.8	66	82	80	52	18	50	6
3	24	0900	127.5	0.47	1.85	1.8	68	82	80	54	19	45	6
4	36	0912	136.0	0.47	1.85	1.8	68	82	80	53	19	40	6
5	48	0924	144.6	0.47	1.85	1.8	68	82	80	49	19	40	6
6	60	0936	153.3	0.47	1.85	1.8	69	82	84	49	19	40	6
7	72	0948	159.2	0.47	1.85	1.8	69	82	84	48	18 / 19	100 / 50	6
8	84	1000	166.8	0.47	1.85	1.8	69	82	84	51	19	40	6
	96	1012	176.627								19	40	
AVERAGE /SUM	192		127.802	.686		1.8	69	86.					

Change Batch 0940

51.11 × 19V / 60 = 43.5

ES ENGINEERING-SCIENCE COMPANIES

Plant McDonnell Douglas
Date 8-22-89
POST LEAK RATE

Page 2 of 2
Run Number BF-1-B
Operator ME

TRAVERSE POINT NUMBER	ELAPSED TIME (mins)	CLOCK TIME	GAS METER READING (Vm)	VELOCITY HEAD (delta p)	ORIFICE PRESSURE (delta H, "H2O) Desired	Actual	TEMPERATURES STACK (Ts)	METER INLET	METER ~~OUT~~ TANK	IMPINGER	FILTER Volts	AMPS	PUMP VAC. "Hg
1	96	1024	176.627	0.47	1.85	1.8	70	84	85	52	18	40	6
2	108	1036	185.3	0.47	1.85	1.8	70	84	85	49	18	40	6
3	120	1048	194.1	0.47	1.85	1.8	70	84	85	51	18	40	6
4	132	1100	203.0	0.47	1.85	1.8	70	84	85	51	18	40	6
~~1106~~ 5	144	1112	~~212.4~~ ~~20~~	0.47	1.85	1.8	70	85	86	53	0 / 20	0 / 100	6
~~1115~~ 6	156	1124	220.8	0.47	1.85	1.8	72	85	86	54	21	40	6
7	168	1136	230.1	0.47	1.85	1.8	72	85	86	55	21	40	6
8	180	1148	238.350	0.47	1.85	1.8	72	85	86	55	21	35	6
	192	1100	END	EARLY	AT REQUEST /								
AVERAGE /SUM													

9,840 amp-min [1 hr / 60 min]

= 164 amp-hrs

ENGINEERING-SCIENCE, INC. BF-Bottom 070855

TRAIN RECOVERY SHEET

DATE 8-22-89 RUN# 2 METHOD 205

FACILITY DAC Bldg 3 TYPE

TECHNICIAN DJ/RR 8-23-89 IMP. SOLUTION $NaHCO_3$

	SOLUTION	VOL. (ml)	DESCRIPTION
NOZZLE-PROBE RINSE			✓
UMBILICAL RINSE			✓

		FINAL (g)	INITIAL (g)	NET (g)
IMPINGER # 1		603.1	590.2	12.9
IMPINGER # 2		567.3	564.5	2.8
IMPINGER # 3		490.4	488.8	1.6
IMPINGER #				
DESCRIPTION				
IMPINGER RINSE				

		FINAL (g)	INITIAL (g)	
SILICA GEL (DESCRIPTION)		792.4	766.2	26.2
FILTER# (DESCRIPTION)	Teflon No Face	TOTAL MOISTURE		43.5 (g)

FIELD BLANKS

DISPOSITION/COMMENTS T#1

Numl Form

TOP

.0019 1.91
.0029 2.92
3.72

~~3.22~~
~~.2375~~
.21

.0082

ES ENGINEERING-SCIENCE COMPANIES

FIELD DATA

Plant OAC - LONG BEACH
Date 8/22/89
Test Site ANODIZING TANK
Run Number F-2A
Operator TG

Ambient Temp
Barometer
Stack Pressure
Stack H20 %
Stack Dia

Meter # BLUE #1
Meter Gamma 1.02
Meter Box ΔH 1.73
Nozzle Diameter 0.210
Probe Length 12"

Probe Mat'l TEFLON
Filter Number NO BAG/TEFLON
Samp Box # N/A
PRE LEAK 0.007 @ 15
POST LEAK 0.004

TRAVERSE POINT NUMBER	ELAPSED TIME (mins)	CLOCK TIME	GAS METER READING (Vm)	VELOCITY HEAD (delta p)	ORIFICE PRESSURE (delta H, "H2O) Desired	Actual	TEMPERATURES STACK (Ts)	METER ~~INLET~~	~~METER OUT~~ TANK TEMP	IMPINGER	FILTER VOLT	AMP	PUMP VAC. "Hg
1	0	1240	306.254	0.47	1.56	1.55	72	92	85	48			
	*	1242	307.345		SHUT	DOWN	VAC -	TOO HIGH	17"				
1	2	1251	307.900	0.47	0.90	0.90	72	90	85	49	23.7	52	2
2	12	1301	312.1	0.47	0.90	0.90	72	91	100	48	24	52	2
3	24	1313	319.5	0.47	0.90	0.90	72	92	100	49	24	54	2
4	36	1325	325.9	0.47	0.90	0.90	73	92	100	50	24.5	60	2
5	48	1337	332.3	0.47	0.90	0.90	72	92	100	50	24.5	55	2
6	60	1349	338.5	0.47	0.90	0.90	72	92	100	51	20.5	70	2
7	72	1401	345.0	0.47	0.90	0.90	72	92	100	51	21	50	2
8	84	1413	351.3	0.47	0.90	0.90	73	92	100	52	21	53	2
	96	1425	357.820										
										56.65 A	19V / 60		181.M
										40	9		
AVERAGE /SUM	192		109.746	.686		1.2	73		100				

3.22

* CHANGED LINE & NOZZLE - NEW K = 1.91
RECTIFIER OFF 1338 RECTIFIER ON 1346

ENGINEERING-SCIENCE COMPANIES

Plant DAC - LONG BEACH
Date 8/22/89
POST LEAK RATE

Page 2 of 2
Run Number F-2A
Operator

TRAVERSE POINT NUMBER	ELAPSED TIME (mins)	CLOCK TIME	GAS METER READING (Vm)	VELOCITY HEAD (delta p)	ORIFICE PRESSURE (delta H, "H2O) Desired	ORIFICE PRESSURE (delta H, "H2O) Actual	TEMPERATURES STACK (Ts)	TEMPERATURES METER ~~INLET~~	TEMPERATURES METER ~~OUT~~ TANK	TEMPERATURES IMPINGER	TEMPERATURES FILTER V	TEMPERATURES FILTER AMPS	PUMP VAC. "Hg
	96	1436	357.820	~~0.782~~ 0.47	1.51	1.50	75	94	100	49	21	70	4
	108	1448	366.3	0.42	1.51	1.50	75	94	100	49	21	70	4
	120	1500	374.6	0.47	1.51	1.50	75	94	100	50	21	70	4
	132	1512	382.9	0.47	1.51	1.50	75	94	100	50	21	55	4
	144	1524	391.1	0.47	1.51	1.50	75	94	100	51	21	60	4
	156	1536	399.4	0.47	1.51	1.50	74	94	100	52	21	60	4
	168	1548	407.7	0.47	1.51	1.50	73	96	105	54	21	60	4
	180	1600	416.0	0.47	1.51	1.50	73	96	105	56	21	64	4
	192	1612				END							
AVERAGE /SUM													

9.934 cu ft / 60 min

= 165.6 dscfm

NEW NOZZLE = K 3.22

ENGINEERING-SCIENCE, INC. BF-TOP 890856

TRAIN RECOVERY SHEET

DATE 8-22-89 RUN# 3 METHOD 205

FACILITY OAC TYPE CHROME HEX

TECHNICIAN R.O./R.R. IMP. SOLUTION $NaHCO_3$

	SOLUTION	VOL. (ml)	DESCRIPTION
NOZZLE-PROBE RINSE			✓
UMBILICAL RINSE			✓

		FINAL (g)	INITIAL(g)	NET(g)
IMPINGER # 1	$NaHCO_3$	613.4	600.4	13.0
IMPINGER # 2	$NaHCO_3$	556.7	554.5	2.2
IMPINGER # 3	EMPTY	478.1	476.7	1.4
IMPINGER #				
DESCRIPTION				
IMPINGER RINSE				

		FINAL (g)	INITIAL(g)	
SILICA GEL (DESCRIPTION)		833.0	808.7	24.3
FILTER# (DESCRIPTION)	Teflon No TARE	TOTAL MOISTURE		40.9 (g)

FIELD BLANKS

DISPOSITION/COMMENTS

Chromic Acid [illegible] .35
Chromium Trioxide

Temp 90-100F TANK 370 ANALYZE

10 m/s Foam + 10 m/s foam

ES ENGINEERING-SCIENCE COMPANIES FIELD DATA

FINAL

Plant McDonnell Douglas
Date 8-22-89
Test Site Long Beach
Run Number 2-FF-B
Operator MG/RR/TGI

Ambient Temp 77
Barometer
Stack Pressure
Stack H2O % 2
Stack Dia 10½

Meter ΔH@ 1.92
Meter Gamma .99
Meter Box # Blue 2
Nozzle Diameter 0.2448
Probe Length 12"

BOTTOM

Probe Mat'l SS
Filter Number NA
Samp Box # NA
PRE LEAK 0.001
POST LEAK 0.003 @10

TRAVERSE POINT NUMBER	ELAPSED TIME (mins)	CLOCK TIME	GAS METER READING (Vm)	VELOCITY HEAD (delta p)	ORIFICE PRESSURE (delta H, "H2O) Desired	Actual	TEMPERATURES STACK (Ts)	METER INLET	METER OUT TANK	IMPINGER	FILTER Volts	Amps	PUMP VAC. "Hg
1	0	12:34	242.025	0.47	1.89	1.9	72	84	82	60	24	75	6
2	12	1246	251.4	0.47	1.89	1.9	73	86	84	60	24	60	6
3	24	12:58	260.5	0.47	1.89	1.9	72	86	90	55	24	50	6
4	36	1310	~~260~~ 270.3	0.47	1.89	1.9	72	86	100	53	24	50	6
5	48	1322	279.2	0.47	1.89	1.9	72	86	100	53	24	60	6
6	60	1334	288.9	0.47	1.89	1.9	70	92	100	52	24	65	6
7	72	1346	298.2	0.47	1.89	1.9	70	92	100	51	~~20~~	~~80~~	6
8	84	1358	307.4	0.47	1.89	1.9	70	92	100	52	21	50	
	96	1410	316.0								21	50	
											192.11 / 60		182.77
										60.59 x			
										51.3			
AVERAGE /SUM	192		148.536	.686		1.9	72		98.00				

Batch Switch 1336 →

1347 Batch Start →

11

ES ENGINEERING-SCIENCE COMPANIES

Plant McDonnell Douglas
Date 8-22-89
POST LEAK RATE 0.

Page 2 of 2
Run Number 2-F-B
Operator KE/RH/JG

TRAVERSE POINT NUMBER	ELAPSED TIME (mins)	CLOCK TIME	GAS METER READING (Vm)	VELOCITY HEAD (delta p)	ORIFICE PRESSURE (delta H, "H2O) Desired	ORIFICE PRESSURE (delta H, "H2O) Actual	TEMPERATURES STACK (Ts)	TEMPERATURES METER INLET	TEMPERATURES ~~METER OUT~~ TANK	TEMPERATURES IMPINGER	TEMPERATURES FILTER Volts	TEMPERATURES FILTER Amps	PUMP VAC. "Hg
1	96	1414	316.262	0.47	1.89	1.9	70	90	100	50	21	60	6
2	108	1426	325.3	0.47	1.89	1.9	72	90	100	49	21	60	6
3	120	1438	334.6	0.47	1.89	1.9	72	90	100	50	21	60	6
4	132	1450	344.1	0.47	1.89	1.9	74	90	100	49	21	60	6
5	144	1502	353.4	0.47	1.89	1.9	74	90	100	50	21	70	6
6	156	1514	362.6	0.47	1.89	1.9	74	90	105	51	21	60	6
7	168	1526	372.1	0.47	1.89	1.9	74	90	105	50	21	60	6
8	180	1538	381.3	0.47	1.89	1.9	74	90	105	50	21	60	6
	192	1550	390.561								21		
AVERAGE /SUM													

11) 280 amp min [1 hr / 60 min] = 4.68 amps

ENGINEERING-SCIENCE, INC.

TRAIN RECOVERY SHEET

F-2-Bottom 840857

DATE 8-22-87

RUN# 3 METHOD 205

-ILITY DAC

TYPE CHROME

.NICIAN RO/RP

IMP. SOLUTION $NaHCO_3$

	SOLUTION	VOL. (ml)	DESCRIPTION
NOZZLE-PROBE RINSE			
MBILICAL RINSE			

		FINAL (g)	INITIAL (g)	NET (g)
IMPINGER # 1	$NaHCO_3$	565.8	552.4	13.4
MPINGER # 2	$NaHCO_3$	573.1	569.7	3.4
IMPINGER # 3	MT	488.5	485.7	2.8
MPINGER #				
DESCRIPTION				
MPINGER RINSE				

		FINAL (g)	INITIAL (g)	
SILICA GEL (DESCRIPTION)		801.1	769.4	31.7
FILTER# (DESCRIPTION)	Teflon No TARE	TOTAL MOISTURE		51.3 (g)

IELD BLANKS

DISPOSITION/COMMENTS

K=3.33 89UBJ

ES ENGINEERING-SCIENCE COMPANIES

FIELD DATA

ADDITIVE

Plant DAL - LONG BEACH
Date 8/22/89
Test Site ANODIZING TANK
Run Number FAM-3-A
Operator TG

Ambient Temp 75
Barometer
Stack Pressure -1.0
Stack H2O %
Stack Dia

Meter ΔH@ 1.92
Meter Gamma 0.99
Meter Box # BLUE #2
Nozzle Diameter 0.2335
Probe Length 12"

Probe Mat'l TEFLON
Filter Number NOTARE/TEF.
Samp Box #
PRE LEAK 0.007 @ 15
POST LEAK 0.004 @ 9

TRAVERSE POINT NUMBER	ELAPSED TIME (mins)	CLOCK TIME	GAS METER READING (Vm)	VELOCITY HEAD (delta p)	ORIFICE PRESSURE (delta H, "H2O) Desired	Actual	TEMPERATURES STACK (Ts)	METER ~~INLET~~	~~METER OUT~~ TANK	~~IMPINGER~~ VOLTS	AMPS	~~FILTER~~ IMPINGER	PUMP VAC. "Hg
1	0	1625	393.621	0.47	1.56	1.55	71	92	105	20	170	64	7
2	12	1637	402.2	0.47	1.56	1.55	72	92	105	20	160	59	8
3	24	1649	410.8	0.47	1.56	1.55	72	92	105	20	180	66	8
4	36	1701	419.3	0.47	1.56	1.55	72	93	105	20	190	61	8
5	48	1713	427.871							NO MATERIAL TEMPORARY SHUT DOWN			
5	48	1756	427.871	0.47	1.56	1.55	70	89	110	20.5	80	62	7
6	60	1808	436.5	0.47	1.56	1.55	70	89	110	21	85	59	7
7	72	1820	445.1	0.47	1.56	1.55	69	90	110	21	90	60	7
8	84	1832	453.7	0.47	1.56	1.55	68	90	110	21	100	61	7
	96	1844	462.241		PORT CHANGE								
									118.75		192/60	= 42.0	
											54.3		
AVERAGE /SUM	192		136.877	0.686		1.55	69		112.5				

RECTIFIER OFF 1704 RECTIFIER OFF 2015

ES ENGINEERING-SCIENCE COMPANIES

Plant OAC - LONG BEACH
Date 8/22/89
POST LEAK RATE 0.004 @ 9

Page 2 of 2
Run Number FAM-3-A
Operator TG

TRAVERSE POINT NUMBER	ELAPSED TIME (mins)	CLOCK TIME	GAS METER READING (Vm)	VELOCITY HEAD (delta p)	ORIFICE PRESSURE (delta H, "H2O) Desired	Actual	TEMPERATURES STACK (Ts)	METER ~~INLET~~	~~METER OUT~~ TANK	IMPINGER	FILTER Volts	Amps	PUMP VAC. "Hg
1	96	1848	462.241	0.47	1.56	1.55	68	90	110	61	23	105	7
2	108	1900	470.8	0.47	1.56	1.55	68	92	115	63	23.4	125	7
3	120	1912	479.3	0.47	1.56	1.55	67	92	115	64	23.4	130	7
4	132	1924	487.8	0.47	1.56	1.55	67	94	120	65	23.4	125	7
5	144	1936	496.4	0.47	1.56	1.55	67	96	120	64	23	95	7
6	156	1948	504.9	0.47	1.56	1.55	66	97	120	64	22.5	165	7
7	168	2000	513.3	0.47	1.56	1.55	66	97	120	65	22.5	150	7
8	180	2012	522.9	0.47	1.56	1.55	66	98	120	66	22	140	7
	192	2024	530.498			END							
AVERAGE /SUM													

(4,104 amp hr) / 60 min

268.4 amp hr

ENGINEERING-SCIENCE, INC.

TRAIN RECOVERY SHEET

8408 8
FA-3A

DATE 8-22-8

RUN# 3 METHOD 205

LITY DAC

TYPE CHROME

T NICIAN RO/RR

IMP. SOLUTION $NaHCO_3$

	SOLUTION	VOL. (ml)	DESCRIPTION
NOZZLE-PROBE RINSE			
UMBILICAL RINSE			

		FINAL (g)	INITIAL (g)	NET (g)
IMPINGER # 1	$NaHCO_3$	555.8	546.1	9.7
IMPINGER # 2	$NaHCO_3$	559.3	556.0	3.3
IMPINGER # 3	MT	480.7	477.4	3.3
IMPINGER #				
DESCRIPTION				
IMPINGER RINSE				

		FINAL (g)	INITIAL (g)	
SILICA GEL (DESCRIPTION)		845.3	807.3	38.0
FILTER# (DESCRIPTION)	teflon NOTARE	TOTAL MOISTURE		54.3 (g)

FIELD BLANKS

DISPOSITION/COMMENTS

ISOKINETIC SAMPLING RA

Plant McDonnell Douglas. LB

Sampling Location L.B. Building #3 Date 8/21/89

Calculation for Isokinetic Sampling Rate:

$$K = 849.8\ C_p^2\ \Delta H_@\ D_n^4\ (1-B_{ws})^2\ \left(\frac{T_m}{T_s}\right)$$

$$K = 849.8\ (.84)^2\ (1.92)\ (.244)^4\ (1-.02)^2\ \left(\frac{541}{537}\right)$$

3.919

$$K = 3.948$$

Calculation for Nozzle Diameter:

$$D_n = \sqrt{\left(\frac{0.0268\ P_m}{T_m\ C_p}\right) \times \left(\frac{1}{1-\%H_2O}\right) \sqrt{\frac{T_s\ M_s}{P_s\ \sqrt{\Delta P}}}}$$

$$D_n = \sqrt{\frac{0.0268\ (\quad)}{(\quad)(\quad)} \times \frac{1}{(\quad)} \sqrt{\frac{(\quad)(\quad)}{(\quad)(\quad)}}}$$

CALIBRATED PRESSURE DIFFERENTIAL ACROSS ORIFICE, in. H_2O	$\Delta H_@$	1.92
AVERAGE METER TEMPERATURE (AMBIENT + 20 °F), °F	$T_{m_{avg.}}$	
PERCENT MOISTURE IN GAS STREAM BY VOLUME	B_{wo}	
BAROMETRIC PRESSURE AT METER, in. Hg	P_m	
STATIC PRESSURE IN STACK, in. Hg ($P_m \pm 0.073$ x STACK GAUGE PRESSURE in in. H_2O)	P_s	
RATIO OF STATIC PRESSURE TO METER PRESSURE	P_s/P_m	
AVERAGE STACK TEMPERATURE, °F	$T_{s_{avg.}}$	
AVERAGE VELOCITY HEAD, in. H_2O	$\Delta p_{avg.}$	
MAXIMUM VELOCITY HEAD, in. H_2O	$\Delta p_{max.}$	
C FACTOR		
CALCULATED NOZZLE DIAMETER, in.		
ACTUAL NOZZLE DIAMETER, in.		

Note: Temperatures for isokinetic calculation must be degrees Rankin (°F + 460)
Nozzle diameter is in inches

ENGINEERING SCIENCE

Pasadena, California

PRELIMINARY VELOCITY TRAVERSE DATA

Plant McDonnell Douglas Date 8/21/89

Location Stack I.D.

Barometric Pressure Static Pres

Operators S-Type

West

TRAVERSE POINT NUMBER	VELOCITY HEAD	STACK TEMP.	CYCLONIC FLOW ANGLE
1	.62	77	
8	.58	77	
3	.54	77	
4	.50	77	
5	.54	77	
6	.58	77	
7	.59	77	
8	.59	77	
AVERAGE			

South

TRAVERSE POINT NUMBER	VELOCITY HEAD	STACK TEMP.	CYCLONIC FLOW ANGLE
1	.52	76	
2	.52	76	
3	.41	77	
4	.42	77	
5	.42	77	
6	.42	77	
7	.40	77	
8	.40	77	
AVERAGE			

TRAVERSE POINT LOCATION FOR CIRCULAR DUCTS

PLANT McDonnell Douglas
DATE 8/21/89
SAMPLING LOCATION LB
INSIDE OF FAR WALL TO
OUTSIDE OF NIPPLE, (DISTANCE A)
INSIDE OF NEAR WALL TO
OUTSIDE OF NIPPLE, (DISTANCE B)
STACK I.D., (DISTANCE A - DISTANCE B) 10 1/2"
NEAREST UPSTREAM DISTURBANCE
NEAREST DOWNSTREAM DISTURBANCE
CALCULATOR

SCHEMATIC OF SAMPLING LOCATION

TRAVERSE POINT NUMBER	FRACTION OF STACK I.D.	STACK I.D.	PRODUCT OF COLUMNS 2 AND 3 (TO NEAREST 1/8 INCH)	DISTANCE B	TRAVERSE POINT LOCATION FROM OUTSIDE OF NIPPLE (SUM OF COLUMNS 4 & 5)
1	~~2.6~~ 3.2	10.5	.334		1 1/8"
2	~~8.2~~ 10.5	"	1.10		1 1/8"
3	~~14.6~~ 19.4	"	2.03		2"
4	~~22.6~~ 32.3	"	3.39		3 3/8"
5	~~34.2~~ 67.7	"	~~10.5~~ 7.00		7"
6	~~65.8~~ 80.6	"	8.46		8 1/2"
7	~~77.4~~ 89.5	"	9.40		9 3/8"
8	~~85.4~~ 96.8	"	10.16		10 1/8"
	~~96.8~~				
1	3.2	"	.34		
2	10.5	"	1.10		
3	19.4	"	2.03		
4	32.3	"	3.39		
5	67.7	"	7.00		
6	80.6	"	8.46		
7	89.5	"	9.40		
8	96.8	"	10.16		

NOZZLE IDENTIFICATION SHEET

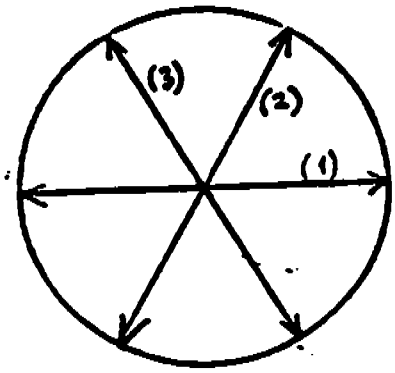

Nozzle identification No: 171

Nozzle internal dia. (1): 0.2525 inch

Nozzle internal dia. (2): 0.2541 inch

Nozzle internal dia. (3): 0.2553 inch

Average diameter (ave of 1,2 and 3): ~~0.2547~~ 0.2540 inch

Operator: _____ Date 8/21/89

NOZZLE IDENTIFICATION SHEET

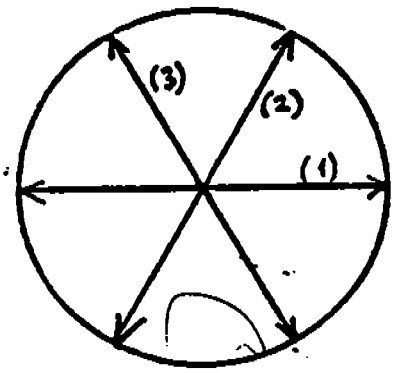

Nozzle identification No: 155 136

Nozzle internal dia. (1): .2330 inch 1 .2380

Nozzle internal dia. (2): .2325 inch 2 .2390

Nozzle internal dia. (3): .2350 inch 3 .2380

Average diameter (ave of 1,2 and 3): 0.2335 inch $\bar{x}$ 0.2383

Operator: _____ Date _____

NOZZLE IDENTIFICATION SHEET

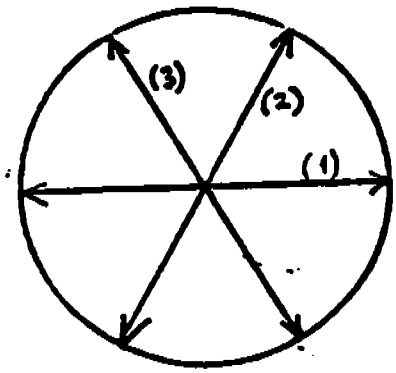

Nozzle identification No: 11

Nozzle internal dia. (1): ~~.2440~~ inch 0.2440

Nozzle internal dia. (2): ~~.2450~~ inch 0.2455

Nozzle internal dia. (3): ~~.2450~~ inch 0.2450

Average diameter (ave of 1,2 and 3): ~~0.2450~~ 0.2448 inch

Operator: MR

Date 8/22/89

ENGINEERING SCIENCE

Pasadena, California

PRELIMINARY VELOCITY TRAVERSE DATA

Plant DAC Date 8/22/89

Location ANODIZING TANK Stack I.D. 10.5

Barometric Pressure _____ Static Pres _____

Operators TG/RR

LOWER

TRAVERSE POINT NUMBER	VELOCITY HEAD	STACK TEMP.	CYCLONIC FLOW ANGLE
1	0.55	67	
2	0.55	67	
3	0.50	67	
4	0.47	67	
5	0.41	67	
6	0.42	67	
7	0.42	67	
8	0.42	67	
AVERAGE	0.47		

TRAVERSE POINT NUMBER	VELOCITY HEAD	STACK TEMP.	CYCLONIC FLOW ANGLE
AVERAGE			

ENGINEERING SCIENCE

Pasadena, California

PRELIMINARY VELOCITY TRAVERSE DATA

Plant McDonnell Douglas

Date 8-22-89

Location Tank 370 L.B.

Stack I.D. 10 1/2"

Barometric Pressure

Static Pres -

Operators RR / TG / ME

lower west

TRAVERSE POINT NUMBER	VELOCITY HEAD	STACK TEMP.	CYCLONIC FLOW ANGLE
1	.47		
2	.47		
3	.48		
4	.39		
5	.44		
6	.44		
7	.47		
8	.47		
upper west			
1	.41		
2	.41		
3	.40		
4	.41		
5	.42		
6	.43		
7	.41		
8	.41		
AVERAGE			

TRAVERSE POINT NUMBER	VELOCITY HEAD	STACK TEMP.	CYCLONIC FLOW ANGLE
AVERAGE			

FOAM + ADDITIVE #1 A

8.27 @ TM-10

ES ENGINEERING-SCIENCE COMPANIES

FIELD DATA

PAGE 1 OF ___

Plant DAC
Date 8-30-89
Test Site 9409 3 PANK/310
Run Number [illegible] F-1
Operator [illegible]

Ambient Temp 81
Barometer 29.10
Stack Pressure -1.1
Stack H2O % 2
Stack Dia 8

Meter ΔH@ 1.68
Meter Gamma 1.01
Meter Box # YELLOW
Nozzle Diameter 0.300
Probe Length

Probe Mat'l SS
Filter Number NA
Samp Box # 5
PRE LEAK 0.018 @ 15
POST LEAK

TRAVERSE POINT NUMBER	ELAPSED TIME (mins)	CLOCK TIME	GAS METER READING (Vm)	VELOCITY HEAD (delta p)	ORIFICE PRESSURE (delta H, "H2O) Desired	Actual	TEMPERATURES STACK (Ts)	METER INLET	METER OUT	IMPINGER	~~FILTER~~ HMP/PO	PUMP VAC. "Hg
1	0	1043	54.078	0.41	3.31	3.3	72	82			150/23	
2	15	1058	68.1	0.41	3.31	3.3	73	96			145/23	6
3	30	1113	83.9	0.41	3.31	3.3	73	104			160/23	6
4	45	1128	100.0	0.41	3.4	3.4	74	105			170/23	6
~~5~~	60	1143	115.951	STOP TEST - CHANGE ANOD. PARTS								
5	60	1223	115.951	0.41	3.4	3.4	74	90			165/22	6
6	75	1238	130.6	0.41	3.4	3.4	75	97			170/22.5	6
7	90	1253	147.2	0.41	3.4	3.4	76	104			180/22.5	6
8	105	1308	162.1	0.41	3.4	3.4	76	108			195/22.5	6
~~8~~	120	1323	177.945	STOP TEST - Change ANODE PARTS								
9	120	1344	177.945	0.41	3.4	3.4	76	99			210/17.5	6
10	135	1359	194.9	0.41	3.4	3.4	77	109			200/18	6
AVERAGE /SUM												

ES ENGINEERING-SCIENCE COMPANIES

Plant DAC-LB
Date 8-30-89
POST LEAK RATE 0.018 @ 8"

Page 2 of 2
Run Number E+A-1A
Operator Cottone

TRAVERSE POINT NUMBER	ELAPSED TIME (mins)	CLOCK TIME	GAS METER READING (Vm)	VELOCITY HEAD (delta p)	ORIFICE PRESSURE (delta H, "H2O) Desired	ORIFICE PRESSURE (delta H, "H2O) Actual	TEMPERATURES STACK (Ts)	TEMPERATURES METER INLET	TEMPERATURES METER OUT	TEMPERATURES IMPINGER	TEMPERATURES FILTER Amps/Volts	PUMP VAC. "Hg
11	150	1414	209.2	0.41	3.4	3.4	77	111			210/18	6
12	165	1429	224.3	0.41	3.4	3.4	78	112			215/18	6
12	180	1444	240.682	End	Test							
AVERAGE /SUM			186.684	$\sqrt{\Delta p}$ 0.616			75	101				

179.1 × 180 − 0 / 60 = 537.5

ENGINEERING-SCIENCE, INC.

TRAIN RECOVERY SHEET

DATE 8-30-89 RUN# 2 METHOD 205.1

FACILITY DOUGLAS AIRCRAFT F+A - ~~YB~~ RM IA TYPE HexChrome / TOTALCHR

TECHNICIAN RM IMP. SOLUTION $NaHCO_3$ 0.02N

	SOLUTION	VOL. (ml)	DESCRIPTION
NOZZLE-PROBE RINSE			
UMBILICAL RINSE			

		FINAL (g)	INITIAL (g)	NET (g)
IMPINGER # 1	$NaHCO_3$	565.7	555.9	9.8
IMPINGER # 2	$NaHCO_3$	602.1	601.9	.2
IMPINGER # 3	EMPTY	505.0	501.1	3.9
IMPINGER #				
DESCRIPTION				
IMPINGER RINSE	TOTAL VOLUME	786.6 - 102.7	683.9 mL	

		FINAL (g)	INITIAL (g)	
SILICA GEL (DESCRIPTION)	5/6 USED	849.3	800.9	48.4
FILTER# (DESCRIPTION)		TOTAL MOISTURE		62.3 (g)

FIELD BLANKS

DISPOSITION/COMMENTS

FOAM + ADDITIVE #. B K' = 11.091

ES ENGINEERING-SCIENCE COMPANIES

FIELD DATA

Plant: DAC, LLB
Date: 8/20/89
Test Site: STACK 3
Run Number: FA-1B
Operator: DALBY

Ambient Temp: 81
Barometer: 29.10
Stack Pressure: -1.1
Stack H2O %: 2
Stack Dia: 8

Meter ΔH@: 1.92
Meter Gamma: 0.99
Meter Box #: BLUE #2
Nozzle Diameter: 0.314
Probe Length:

Probe Mat'l: SS
Filter Number: NA
Samp Box #: 1
PRE LEAK: 0.00
POST LEAK:

TRAVERSE POINT NUMBER	ELAPSED TIME (mins)	CLOCK TIME	GAS METER READING (Vm)	VELOCITY HEAD (delta p)	ORIFICE PRESSURE (delta H, "H2O) Desired	ORIFICE PRESSURE (delta H, "H2O) Actual	TEMPERATURES STACK (Ts)	TEMPERATURES METER INLET	TEMPERATURES METER OUT	TEMPERATURES IMPINGER	TEMPERATURES FILTER	PUMP VAC. "Hg
1	0	1043	658.163	0.41	4.65	4.35	72		75			18
2	15	1058	673.2	0.41		4.35	73		85			18
3	30	1113	689.9	0.41		4.40	73		85			18
4	45	1128	708.1	0.41		4.40	74		86			18
4	60	1143	725.037	STOP	TEST	- Change			Anode. Loss			
5	60	1223	725.037	0.41		4.40	74		85			18
6	75	1238	740.6	0.41		4.45	75		85			18
7	90	1253	759.2	0.41		4.45	76		84			18
8	105	1308	775.5	0.41		4.45	76		84			18
8	120	1323	792.605	STOP	TEST	- Change			Anode Parts			
9	120	1344	792.605	0.41		4.4	76		89			18
10	135	1359	811.5	0.41		4.4	77		90			18
AVERAGE /SUM												

ES ENGINEERING-SCIENCE COMPANIES

Plant DAC LB
Date 8/30/89
POST LEAK RATE .018

Page 2 of 2
Run Number FA-1B
Operator DALEY

TRAVERSE POINT NUMBER	ELAPSED TIME (mins)	CLOCK TIME	GAS METER READING (Vm)	VELOCITY HEAD (delta p)	ORIFICE PRESSURE (delta H, "H2O)		TEMPERATURES					PUMP VAC. "Hg
					Desired	Actual	STACK (Ts)	METER INLET	METER OUT	IMPINGER	FILTER	
11	150	1414	842.4	0.41	4.55	4.35	78	90				18
12	165	1429		0.41								18
12	180	1444	860.03	END TEST								
AVERAGE /SUM			201.872	0.64			75	85				

ENGINEERING-SCIENCE, INC.

TRAIN RECOVERY SHEET

DATE 8-30-89

FACILITY DOUGLAS AIRCRAFT F+A - ~~#~~ RM 1B

TECHNICIAN RM

RUN# 1 METHOD 205.1

TYPE Hexchrome - TOTAL CHROME

IMP. SOLUTION $NaHCO_3$ 0.02N

	SOLUTION	VOL. (ml)	DESCRIPTION
NOZZLE-PROBE RINSE			
MBILICAL RINSE			

		FINAL (g)	INITIAL (g)	NET (g)
IMPINGER # 1	$NaHCO_3$	618.4	610.0	8.4
IMPINGER # 2	$NaHCO_3$	573.4	570.9	2.5
IMPINGER # 3	EMPTY	481.4	477.0	4.4
IMPINGER #				
DESCRIPTION				
IMPINGER RINSE	TOTAL VOLUME	661.3-102.6	568.7	

		FINAL (g)	INITIAL (g)	
SILICA GEL (DESCRIPTION)	5/6 USED	897.5	847.8	49.7
FILTER# (DESCRIPTION)		TOTAL MOISTURE		65.0 (g)

FIELD BLANKS

DISPOSITION/COMMENTS

BALLS 1A

K = 9.216

ES ENGINEERING-SCIENCE COMPANIES

FIELD DATA

PAGE 1 OF ___

Plant DAC - Bldg 3
Date 8-31-89
Test Site Tank #
Run Number BALLS - 1A
Operator Cotterill

Ambient Temp 79
Barometer 29.10
Stack Pressure -1.1
Stack H2O % 2
Stack Dia 10.5

Meter ΔH@ 1.92
Meter Gamma 0.99
Meter Box # Dual 2
Nozzle Diameter 0.300
Probe Length

Probe Mat'l S
Filter Number NA
Samp Box # 10
PRE LEAK 0.00 @ 22"
POST LEAK

TRAVERSE POINT NUMBER	ELAPSED TIME (mins)	CLOCK TIME	GAS METER READING (Vm)	VELOCITY HEAD (delta p)	ORIFICE PRESSURE (delta H, "H2O) Desired	Actual	TEMPERATURES STACK (Ts)	METER INLET	METER OUT	~~IMPINGER~~ A/V	FILTER	PUMP VAC. "Hg
1	0	1241	925.435	0.37	3.41	3.41	80	82		150/18		15
2	15	1302	940.1	0.37	3.41	3.8	80	82				16
3	30	1317	954.3	0.37	3.41	3.41	80	82				16
4	45	1332	970.9	0.37	3.41	3.47	81	82				16
5	60	1347	989.5	0.37	3.41		81	84				16
5	66	1353	991.552		Stop Test - Change Parts							19
5	66	1403	991.552	0.37	3.41		82	84				
6	75	1412	1002.3	0.37	3.41	3.41	82	84				19
7	90	1427	1016.8	0.37	3.41	3.41	83	84				16
8	105	1442	1035.3	0.37	3.41	3.41	82	90				15
9	120	1457	1048.001		Stop Test - Change parts							
AVERAGE /SUM			122.566	0.608			81	84				

ENGINEERING-SCIENCE, INC.

EW# 070105

TRAIN RECOVERY SHEET

DATE 8-31-89

RUN# 3 METHOD 205.1

FACILITY DOUGLAS LONG BEACH BALLS IA

TYPE HexChrome

TECHNICIAN BM

IMP. SOLUTION 0.02N NAHCO3

	SOLUTION	VOL. (ml)	DESCRIPTION
NOZZLE-PROBE RINSE			
UMBILICAL RINSE			

		FINAL (g)	INITIAL(g)	NET(g)
IMPINGER # 1	NAHCO3	550.1	547.7	2.4
IMPINGER # 2	NAHCO3	~~549.5~~	547.4	2.1
IMPINGER # 3	EMPTY	~~825.3~~ BM 492.0	~~825.3~~ BM 488.2	
IMPINGER #		82	488.2	3.8
DESCRIPTION				
IMPINGER RINSE				

		FINAL (g)	INITIAL(g)	
SILICA GEL (DESCRIPTION)	SILICA 3/4 USED	825.3	791.6	33.7
FILTER# (DESCRIPTION)		TOTAL MOISTURE		42.1 (g)

FIELD BLANKS

DISPOSITION/COMMENTS

BLANK TRAIN # 10

Balls Only 1B

K = 9.949

ES ENGINEERING-SCIENCE COMPANIES

FIELD DATA

PAGE 1 OF ___

Plant: DAC Bldg 3
Date: 8-31-89
Test Site: Bldg 3
Run Number: BALLS - 1B
Operator: Cottrell

Ambient Temp: 80
Barometer: 29.10
Stack Pressure: -1.1
Stack H2O %: 7
Stack Dia: 10.5

Meter ΔH@: 1.68
Meter Gamma: 1.01
Meter Box #: YELLOW
Nozzle Diameter: 0.314
Probe Length:

Probe Mat'l: SS
Filter Number:
Samp Box #: 7
PRE LEAK:
POST LEAK:

TRAVERSE POINT NUMBER	ELAPSED TIME (mins)	CLOCK TIME	GAS METER READING (Vm)	VELOCITY HEAD (delta p)	ORIFICE PRESSURE (delta H, "H2O) Desired	Actual	TEMPERATURES STACK (Ts)	METER INLET	METER OUT	IMPINGER A / V	FILTER	PUMP VAC. "Hg
1	0	1247	309.988	0.37	3.68	3.8	80	80		150/18		7
2	15	1302	327.4	0.37	3.68	3.8	80	93		140/17		7
3	30	1317	341.1	0.37	3.68	3.8	80	102		140/17		7
4	45	1332	~~359.0~~	0.37	3.68	3.8	81	108		160/18		7
5	60	1347	~~379.2~~	0.37	3.68	3.8	81	112		160/18		7
~~6~~ 5	~~65~~	1353	381.447 STOP	TEST	- Change	Parts						7
~~6~~ 5	66	1403	381.447	0.37	3.68	3.8	82	106		150/18		7
6	75	1412	392.5	0.37	3.68	3.8	82	110		130/18		7
7	90	1427	406.5	0.37	3.68	3.8	83	114		160/18		7
8	105	1442	426.9	0.37	3.68	3.8	83	116		160/18		7
9	120	1457	440.914		STOP	TEST	- Change	Parts				
										15,680 amp min		
										261.5 amp hr		
AVERAGE /SUM			130.926	√Δp 0.608			81	105				

ENGINEERING-SCIENCE, INC.

EJ# 0900100

TRAIN RECOVERY SHEET

DATE 8-31-89

RUN# 3 METHOD 205.1

FACILITY DOUGLAS LONG BEACH BALLS 1B

TYPE HEXCHROME

TECHNICIAN RM

IMP. SOLUTION 0.02N NAHCO3

	SOLUTION	VOL. (ml)	DESCRIPTION
NOZZLE-PROBE RINSE			
UMBILICAL RINSE			

		FINAL (g)	INITIAL(g)	NET(g)
IMPINGER # 1	NAHCO3	574.3	556.8	17.5
IMPINGER # 2	NAHCO3	576.6	567.0	~~8.8~~ 9.6
IMPINGER # 3	EMPTY	490.2	~~490~~ 487.0	3.2
IMPINGER #				
DESCRIPTION				
IMPINGER RINSE				

		FINAL (g)	INITIAL(g)	
SILICA GEL (DESCRIPTION)	3/4 USED	848.8	812.0	36.8
FILTER# (DESCRIPTION)		TOTAL MOISTURE		67.1 (g)

FIELD BLANKS

DISPOSITION/COMMENTS LAB BLANK #7

K = 9.216

ES ENGINEERING-SCIENCE COMPANIES

FIELD DATA

PAGE 1 OF ___

Plant DAC LB
Date 8-31-89
Test Site BLDG 35
Run Number ~~1A~~ U-1A
Operator DAILEY

Ambient Temp 81
Barometer 29.10
Stack Pressure -1.1
Stack H2O % 2
Stack Dia 10 1/2

Meter ΔH@ 1.92
Meter Gamma 0.99
Meter Box # BLUE #2
Nozzle Diameter 0.300
Probe Length ___

Probe Mat'l SS
Filter Number NA
Samp Box # 2
PRE LEAK 0.0
POST LEAK 0.0 @ 20"

TRAVERSE POINT NUMBER	ELAPSED TIME (mins)	CLOCK TIME	GAS METER READING (Vm) 869.880	VELOCITY HEAD (delta p)	ORIFICE PRESSURE (delta H, "H2O) Desired	Actual	TEMPERATURES STACK (Ts)	METER INLET	METER OUT	IMPINGER	~~FILTER~~ Volts/Amps	PUMP VAC. "Hg
1	0	0900	~~869.788~~	.37	3.40	3.0	72	81			18/190	21
2	5	0905	873.60	.37	3.4	2.9	73	81			18/170	"
3	10	0910	878.2	"	"	2.9	73	"			18/170	"
4	15	0915	882.92	"	"	2.9	73	81			18/130	"
5	20	0920	885.72	"	"	2.8	72	"			18/90	"
6	25	0925	890.0	"	"	2.8	73	"			18/90	"
7	30	0930	894.5	"	"	"	74	"			18/90	"
8	35	0935	899.0	"	"	"	"	"			18/100	"
9	40	0940	903.9	"	"	3.2	"	"			"	"
10	45	0945	909.0	"	"	3.2	74	81			18/100	"
11	50	0950	913.67	"	"	"	"	"			18/110	"
12	55	0955	919.0	0.37	3.4	3.2	74	84			18/110	"
13	60	1000	924.911		END	TEST						
										110.83 × 60/60		110.83
AVERAGE /SUM			55.031	0.608		2.7	73	81				

6,500 amp min

ED# 0700107

ENGINEERING-SCIENCE, INC.

TRAIN RECOVERY SHEET

DATE 8-31-89

RUN# 4 METHOD 205.1

TYPE Hexchrome

IMP. SOLUTION 0.02N NAHCO3

FACILITY DOUGLAS LONG BEACH U-1A

TECHNICIAN RM

	SOLUTION	VOL. (ml)	DESCRIPTION
NOZZLE-PROBE RINSE			
UMBILICAL RINSE			

		FINAL (g)	INITIAL(g)	NET(g)
IMPINGER # 1	NAHCO3	565.1	562.1	3.0
IMPINGER # 2	NAHCO3	587.1	586.1	1.0
IMPINGER # 3	EMPTY	506.7	505.4	1.3
IMPINGER #				
DESCRIPTION				
IMPINGER RINSE				

		FINAL (g)	INITIAL(g)	
SILICA GEL (DESCRIPTION)	1/2 USED	776.5	754.4	19.1 ~~22.1~~
FILTER# (DESCRIPTION)		TOTAL MOISTURE		~~27.4~~ 24.4 (g)

FIELD BLANKS

DISPOSITION/COMMENTS

LAB BLANK # 2

0.314
K = 9.949

ES ENGINEERING-SCIENCE COMPANIES

FIELD DATA

PAGE 1 OF 1

Plant DAC
Date 8-31-89
Test Site #307 / MLO13
Run Number U-1B
Operator Cotowe

Ambient Temp 74
Barometer 29.10
Stack Pressure -1.1
Stack H2O % 2
Stack Dia 10.5

Meter ΔH@ 1.68
Meter Gamma 1.01
Meter Box # Yellow #1
Nozzle Diameter 0.314
Probe Length 4"

Probe Mat'l SS
Filter Number NA
Samp Box # 3
PRE LEAK 0.008 @ 20"
POST LEAK 0.010 @ 8"

TRAVERSE POINT NUMBER	ELAPSED TIME (mins)	CLOCK TIME	GAS METER READING (Vm)	VELOCITY HEAD (delta p)	ORIFICE PRESSURE (delta H, "H2O) Desired	Actual	TEMPERATURES STACK (Ts)	METER INLET	METER OUT	~~BENCTR~~ AMPS/VOLTS	~~FILTER~~ TRAKT	PUMP VAC. "Hg
1	0	0900	243.918	0.37	3.68	3.6	72	74		210/17.5	100F	✓
2	5	0905	248.9	0.37	3.68	3.8	72	77		185/18		✓
3	10	0910	254.4	0.37	3.68	3.7	73	82		170/18		✓
4	15	0915	259.8	0.37	3.68	3.7	72	88		125/18		✓
5	20	0920	265.4	0.37	3.68	3.7	72	91		100/18		✓
6	25	0925	269.9	0.37	3.68	3.7	73	94		100/18		✓
7	30	0930	275.4	0.37	3.68	3.7	74	98		95/18		✓
8	35	0935	280.4	0.37	3.68	3.7	74	100		105/18		✓
9	40	0940	286.6	0.37	3.68	3.7	74	104		105/18		✓
10	45	0945	292.1	0.37	3.68	3.7	74	106		105/18		✓
11	50	0950	297.5	0.37	3.68	3.7	74	107		105/18		✓
12	55	0955	302.8	0.37	3.68	3.7	74	108		105/18		✓
12	60	1000	308.856	~~[illegible]~~	End	Test						
										105.83 × 60 / 6		105.83
AVERAGE /SUM			54.938	0.608			73	94				

6,762.5 amp min

ES # 8408108

ENGINEERING-SCIENCE, INC.

TRAIN RECOVERY SHEET

DATE 8-31-89

RUN# 5 METHOD 205.1

FACILITY DAC LONG BEACH BALLO UNCONTROLLED 1B

TYPE HexChrome

TECHNICIAN RM

IMP. SOLUTION 0.02 N NAHCO3

	SOLUTION	VOL. (ml)	DESCRIPTION
NOZZLE-PROBE RINSE			
UMBILICAL RINSE			

		FINAL (g)	INITIAL (g)	NET (g)
IMPINGER # 1	NAHCO3	558.1	558.5	-0.4
IMPINGER # 2	NAHCO3	605.7	604.6	1.1
IMPINGER # 3	EMPTY	486.6	485.0	1.6
IMPINGER #				
DESCRIPTION				
IMPINGER RINSE				

		FINAL (g)	INITIAL (g)	
SILICA GEL (DESCRIPTION)	1/3 USED	845.3	825.3	20
FILTER# (DESCRIPTION)		TOTAL MOISTURE		22.3 (g)

FIELD BLANKS

DISPOSITION/COMMENTS LAB BLANK #3

ES ENGINEERING-SCIENCE COMPANIES

K=9.69 ✓

FIELD DATA

TANK 353

PAGE 1 OF 1

Plant DAC
Date 9-7-89
Test Site Building #3
Run Number Un-1
Operator ME/RM

Ambient Temp 74
Barometer 29.50
Stack Pressure 0.80
Stack H2O % 2
Stack Dia 9"

Meter ΔH@ 1.92
Meter Gamma 0.99
Meter Box # Blue 2
Nozzle Diameter 0.306
Probe Length

Probe Mat'l SS
Filter Number TEFLON
Samp Box #
PRE LEAK ≤.001 @ 20
POST LEAK ≤.001 @ 20

TRAVERSE POINT NUMBER	ELAPSED TIME (mins)	CLOCK TIME	GAS METER READING (Vm)	VELOCITY HEAD (delta p)	ORIFICE PRESSURE (delta H, "H2O) Desired	Actual	TEMPERATURES STACK (Ts)	METER ~~INLET~~	METER OUT	IMPINGER	FILTER	PUMP VAC. "Hg
	000	0832	49.856	0.43	4.17	4.2	74	75		ICED @	OK	10.5
	6	0838	55.6			4.2	74	74		"		11.0
	12	0844	62.1			4.2	74	76		"		10.5
	18	0850	68.9			4.2	73	76		"		10.5
	24	0856	75.2			4.2	73	75		"		11.0
	30	0902	81.8			4.2	73	76		"		11.0
	36	0908	88.5			4.2	73	78		"		11.0
	42	0914	95.4			4.2	73	76		"		11.0
	48	0920	101.9			4.2	73	76		"		11.0
	54	0926	108.7			4.2	73	80		"		11.0
	60	0932	115.334			—	73	80		"		—
			END OF		RUN							
AVERAGE /SUM			66.288	√ΔH = .66			73	77				

ES# 040900

ENGINEERING-SCIENCE, INC.

TRAIN RECOVERY SHEET

DATE 9-7-89 RUN# 1 METHOD 205.1

FACILITY DOUGLAS (L.B) BLD'G #3 UNCONTROLLED TYPE HEXCHROME

TECHNICIAN RM IMP. SOLUTION 0.02 N NAHCO3

	SOLUTION	VOL. (ml)	DESCRIPTION
NOZZLE-PROBE RINSE			
UMBILICAL RINSE			

		FINAL (g)	INITIAL(g)	NET(g)
IMPINGER # 1	NAHCO3	564.1	559.4	4.7
IMPINGER # 2	NAHCO3	578.4	577.0	1.4
IMPINGER # 3	EMPTY	486.9	484.9	~~2.4~~ 2.0
IMPINGER #				
DESCRIPTION				
IMPINGER RINSE				

		FINAL (g)	INITIAL(g)	
SILICA GEL (DESCRIPTION)	3/4 USED	~~827.4~~ RM	827.4	17.7
		845.1		
FILTER# (DESCRIPTION)		TOTAL MOISTURE		25.8 ~~25.7~~ (g)

FIELD BLANKS LAB BLANK TRAIN# 11

DISPOSITION/COMMENTS

ES ENGINEERING-SCIENCE COMPANIES

TANK 353

VNCONFIRMED

FIELD DATA

PAGE 1 OF 1

Plant DAC
Date 9-7-89
Test Site Building #3
Run Number B-P
Operator MZ RM

Ambient Temp 74
Barometer W-50
Stack Pressure 0.80
Stack H2O % 2
Stack Dia 9"

Meter ΔH@ 1.92
Meter Gamma 0.99
Meter Box # Blue 2
Nozzle Diameter 0.306
Probe Length -

Probe Mat'l Teflon
Filter Number 90
Samp Box #
PRE LEAK 0.002 @ 20
POST LEAK 0.003 @ 12

TRAVERSE POINT NUMBER	ELAPSED TIME (mins)	CLOCK TIME	GAS METER READING (Vm)	VELOCITY HEAD (delta p)	ORIFICE PRESSURE (delta H, "H2O) Desired	ORIFICE PRESSURE (delta H, "H2O) Actual	TEMPERATURES STACK (Ts)	TEMPERATURES METER INLET	TEMPERATURES METER OUT	TEMPERATURES IMPINGER ICED	TEMPERATURES FILTER	PUMP VAC. "Hg
	0	0952	115.813	0.43	4.17	4.2	74	80		ICED		10.5
	6	0958	121.9	0.43	4.17	4.2	74	80		W/H2O/CO2		11.0
	12	1004	128.65					80		"		10
	18	1010	135.34					80		"		10
	24	1016	142.03					80		"		10
	30	1022	149.10					80		"		10
	36	1028	155.4	0.43	4.17	4.2		79		"		10
	42	1034	162.2					79		"		10
	48	1040	168.9					79		"		10
	54	1046	175.6					79		"		10
	60	1052	182.358	0.43	4.17	4.2		79		"		10
			END TEST RUN									
AVERAGE /SUM			66.545	.66			74	80				

EO# 840404

ENGINEERING-SCIENCE, INC.

TRAIN RECOVERY SHEET

DATE 9-7-89

RUN# 2 METHOD 205.1

FACILITY DOUGLAS AIRCRAFT (LB) Bubb #3 w/ BALLS

TYPE Hexchrome

TECHNICIAN R M

IMP. SOLUTION NAHCO3 0.02NCO3

	SOLUTION	VOL. (ml)	DESCRIPTION
NOZZLE-PROBE RINSE			
UMBILICAL RINSE			

		FINAL (g)	INITIAL(g)	NET(g)
IMPINGER # 1	NAHCO3	567.6	563.5	4.1
IMPINGER # 2	NAHCO3	622.8	619.6	3.2
IMPINGER # 3	EMPTY	470.3	471.1	-0.8
IMPINGER #				
DESCRIPTION				
IMPINGER RINSE	2x NAHCO3 / 1x HNO3			

		FINAL (g)	INITIAL(g)	
SILICA GEL (DESCRIPTION)	1/2 USED	817.2	798.3	18.9
FILTER# (DESCRIPTION)		TOTAL MOISTURE		25.4 (g)

FIELD BLANKS LAB BLANK #8

DISPOSITION/COMMENTS

Chromium 109
Chromic Acid
Nitric Acid
Hydrofluoric acid

ES ENGINEERING-SCIENCE COMPANIES

TANK #353
Aluminum Etchant tank

FIELD DATA

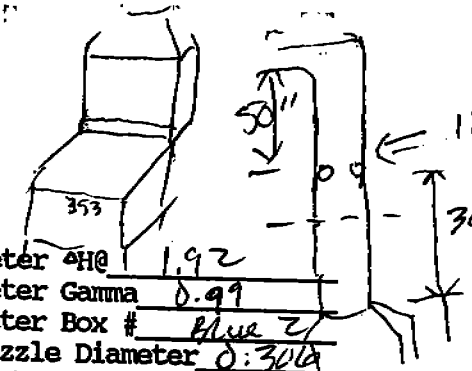

PAGE 1 OF 2

Plant DAC
Date 9-7-89
Test Site Building #3
Run Number Anti mist-1
Operator MG/RM

Ambient Temp 74
Barometer 29.60
Stack Pressure 0.80
Stack H2O % 2
Stack Dia 9"

Meter ΔH@ 1.92
Meter Gamma 0.99
Meter Box # Blue 2
Nozzle Diameter 0.3060
Probe Length

Probe Mat'l Teflon
Filter Number
Samp Box #
PRE LEAK 0.002 @ 20
POST LEAK 0.003 @ 11 "Hg

TRAVERSE POINT NUMBER	ELAPSED TIME (mins)	CLOCK TIME	GAS METER READING (Vm)	VELOCITY HEAD (delta p)	ORIFICE PRESSURE (delta H, "H2O) Desired	Actual	TEMPERATURES STACK (Ts)	METER INLET	METER OUT	IMPINGER ICED	FILTER	PUMP VAC. "Hg
1	0	11:32	182.834	0.43	4.17	4.2		81		with H_2O & CO_2		10.0
2	15	11:47	199.5	0.43	4.17	4.2		81		"		10.0
3	30	12:02	216.69	0.43	"	"		81		"		10.0
4	45	12:17	237.1			4.2		81		"		10.0
5	60	12:32	250.9			4.2		81		"		10.0
6	75	12:47	267.9			4.2	74	83		"		10.0
7	90	1:02	284.8			4.2	74	83		"		10.0
8	105	1:17	301.9			4.2	76°	86		"		10.0
	120	1:32	318.859	End	Run	—	73	86		"		—
AVERAGE /SUM			136.025	$\sqrt{\Delta P}$ = .656		4.2	74	83				

ENGINEERING-SCIENCE, INC.

ES# 890910

TRAIN RECOVERY SHEET

DATE 9-7-89

RUN# _____ METHOD 205.1

FACILITY DOUGLAS (L.B) BLD'G #3 W/ ANTI MIST ONLY

TYPE HEXCHROME

TECHNICIAN RM

IMP. SOLUTION NAHCO3 0.02 N

	SOLUTION	VOL. (ml)	DESCRIPTION
NOZZLE-PROBE RINSE			
UMBILICAL RINSE			

		FINAL (g)	INITIAL (g)	NET (g)
IMPINGER # 1	NAHCO3	555.1	555.2	-0.1
IMPINGER # 2	NAHCO3	601.7	599.7	2.0
IMPINGER # 3	EMPTY	488.6	486.8	1.8
IMPINGER #				
DESCRIPTION				
IMPINGER RINSE				

		FINAL (g)	INITIAL (g)	
SILICA GEL (DESCRIPTION)	4/5 USED	858.8	814.6	44.2
FILTER# (DESCRIPTION)		TOTAL MOISTURE		47.9 (g)

FIELD BLANKS LAB BLANK #12

DISPOSITION/COMMENTS

Old Building 5 - Acid Etch

ES ENGINEERING-SCIENCE COMPANIES

FIELD DATA

K = 52.98

PAGE 1 OF 2

Plant: DAC L.B.
Date: 8-31-84
Test Site: 541 Exhaust
Run Number: 1
Operator: GA/MG

Ambient Temp:
Barometer:
Stack Pressure: Static +0.8
Stack H2O %: 0.2
Stack Dia: 30" x 82"

Meter ΔH@: 1.63
Meter Gamma: 0.965
Meter Box #: Red #2
Nozzle Diameter: 1/2" 0.485
Probe Length:

Probe Mat'l: Teflon
Filter Number:
Samp Box #:
PRE LEAK: 0.1
POST LEAK:

TRAVERSE POINT NUMBER	ELAPSED TIME (mins)	CLOCK TIME	GAS METER READING (Vm) 651.730	VELOCITY HEAD (delta p)	ORIFICE PRESSURE (delta H, "H2O) Desired	Actual	TEMPERATURES STACK (Ts)	METER INLET	METER OUT	IMPINGER	FILTER	PUMP VAC. "Hg
1	0	13:00	651.730	0.03	1.59	1.6	72	8	8	62		6
2	5	13:05	654.55	0.02	1.06	1.1	72	8	8	62		7
3	10	13:10	658.21	0.03	1.59	1.6	73	8	9	62		7
	15	13:15	660.72									
1	0	13:20	660.72	0.03	1.59	1.6	72	9	0	62		7
2	5	13:25	663.74	0.03	1.59	1.6	73	9	4	63		7
3	10	13:30	665.68	0.03	1.59	1.6	73	9	5	64		8
	15	13:35	668.01									
1	0	13:40	668.01	0.02	1.06	1.1	74	9	7	63		8
2	5	13:45	672.26	0.02	1.06	1.1	73	9	7	63		8
3	10	13:50	675.21	0.03	1.59	1.6	74	9	8	64		8
	15	13:55	678.01									
AVERAGE /SUM								13				

ES ENGINEERING-SCIENCE COMPANIES

Bldgs and E

Plant
Date
POST LEAK RATE

Page 2 of 2
Run Number 541
Operator

TRAVERSE POINT NUMBER	ELAPSED TIME (mins)	CLOCK TIME	GAS METER READING (Vm)	VELOCITY HEAD (delta p)	ORIFICE PRESSURE (delta H, "H2O) Desired	Actual	TEMPERATURES STACK (Ts)	METER INLET	METER OUT	IMPINGER	FILTER	PUMP VAC. "Hg
1	0	14:00	680.23	0.01	0.53	0.5	74	97				8
2	5	14:05	683.14	0.02	1.06	1.1	74	98				8
3	10	14:10	685.29	0.02	1.06	1.1	74	98				8
	15	14:5	686.09									
T =	60											
AVERAGE /SUM			34.3	$\sqrt{\Delta p}$ = 0.154		1.00	73	94				

PRELIMINARY VELOCITY TRAVERSE

PLANT DAC
DATE 8-30-89
LOCATION BLDG 3 SANK
STACK I.D. 105
BAROMETRIC PRESSURE, in. Hg 29.1
STACK GAUGE PRESSURE, in. H_2O -1.1
OPERATORS LEC / J DAILEY

8-31-89

Shirley Kirby

SCHEMATIC OF TRAVERSE POINT LAYOUT

0730

TRAVERSE POINT NUMBER	VELOCITY HEAD (Δp_s), in. H_2O	STACK TEMPERATURE (T_s), °F
A-1	.39	74
2	.4	74
3	.42	73
4	.41	73
5	.41	73
6	.39	73
7	.37	73
~~B~~ 8	.37	73
B-1	.34	73
2	.38	73
3	.41	73
4	.41	73
5	.43	73
6	.41	73
7	.42	73
8	.45	73
AVERAGE	0.41	

TRAVERSE POINT NUMBER	VELOCITY HEAD (Δp_s), in. H_2O	STACK TEMPERATURE (T_s), °F
A-1	0.36	72
2	0.36	
3	0.37	72
4	0.37	
5	0.38	72
6	0.38	
7	0.37	72
8	0.37	
B1	0.34	72
2	0.36	
3	0.38	72
4	0.39	
5	0.39	73
6	0.37	
7	0.36	72
8	0.34	
AVERAGE		

EPA (Dur) 233
4/72

ENGINEERING-SCIENCE, INC.

TRAIN RECOVERY SHEET

DATE 8-31-89

RUN# 1 METHOD 205.1

FACILITY DOUGLAS LONG BEACH TANK541

TYPE H-Cr/CME

TECHNICIAN RM

IMP. SOLUTION 0.02N NAHCO3

	SOLUTION	VOL. (ml)	DESCRIPTION
NOZZLE-PROBE RINSE			
UMBILICAL RINSE			

		FINAL (g)	INITIAL (g)	NET (g)
IMPINGER # 1	NAHCO3	658.2	600.9	57.3
IMPINGER # 2	NAHCO3	554.2	600.4	-46.2
IMPINGER # 3	EMPTY	~~854.3~~ RM	~~842.8~~ RM	
IMPINGER #		484.1	483.8	0.3
DESCRIPTION				
IMPINGER RINSE				

		FINAL (g)	INITIAL (g)	
SILICA GEL (DESCRIPTION)	1/2 USED	854.3	842.8	11.5
FILTER# (DESCRIPTION)		TOTAL MOISTURE		22.9 (g)

FIELD BLANKS

DISPOSITION/COMMENTS LAB BLANK #4

ENGINEERING SCIENCE

Pasadena, California

PRELIMINARY VELOCITY TRAVERSE DATA

Plant DAC

Date 9/12/89

Location [illegible]

Stack I.D.

Barometric Pressure

Static Pres -0.72

Operators TG / ND

	TRAVERSE POINT NUMBER	VELOCITY HEAD	STACK TEMP.	CYCLONIC FLOW ANGLE
A	1	0.09	87	
	2	0.09	87	
	3	0.09	87	
	4	0.10	87	
	5	0.09	86	
B	1	0.08	86	
	2	0.09	86	
	3	0.09	86	
	4	0.07	86	
	5	0.06	86	
C	1	0.06	86	
	2	0.06	86	
	3	0.06	86	
	4	0.06	86	
	5	0.06		
AVERAGE				

	TRAVERSE POINT NUMBER	VELOCITY HEAD	STACK TEMP.	CYCLONIC FLOW ANGLE
D	1	0.06	86	
	2	0.06	86	
	3	0.06	86	
	4	0.05	86	
	5	0.04	86	
E	1	0.05	86	
	2	0.05	86	
	3	0.05	86	
	4	0.04	86	
	5	0.03	86	
AVERAGE				

ENGINEERING-SCIENCE, INC. ES # 890919

TRAIN RECOVERY SHEET

DATE 9-12-89

RUN# BLANK METHOD 205.1

FACILITY DOUGLAS AIRCRAFT FIELD BLANK

TYPE Hexchrome/Total CHR

TECHNICIAN RM

IMP. SOLUTION 0.02 N NAHCO3

	SOLUTION	VOL. (ml)	DESCRIPTION
NOZZLE-PROBE RINSE			
UMBILICAL RINSE			

		FINAL (g)	INITIAL (g)	NET (g)
IMPINGER # 1	NAHCO3	566.1	566.3	-0.2
IMPINGER # 2	NAHCO3	546.5	546.2	0.3
IMPINGER # 3	EMPTY	492.8	492.8	0.0
IMPINGER #				
DESCRIPTION				
IMPINGER RINSE				

		FINAL (g)	INITIAL (g)
SILICA GEL (DESCRIPTION)	UNUSED		
FILTER# (DESCRIPTION)		TOTAL MOISTURE	

0.1 (g)

FIELD BLANKS

DISPOSITION/COMMENTS

TRAIN #15

9-12-89

TRAVERSE POINT LOCATION FOR CIRCULAR DUCTS

PLANT _____
DATE _____
SAMPLING LOCATION _____
INSIDE OF FAR WALL TO
OUTSIDE OF NIPPLE, (DISTANCE A) _____
INSIDE OF NEAR WALL TO
OUTSIDE OF NIPPLE, (DISTANCE B) _____
STACK I.D., (DISTANCE A - DISTANCE B) _____
NEAREST UPSTREAM DISTURBANCE _____
NEAREST DOWNSTREAM DISTURBANCE _____
CALCULATOR _____

DRC ✓
Bldg 5
Tank 534
Me Gill 818 603 6094

SCHEMATIC OF SAMPLING LOCATION

818 443 6094

TRAVERSE POINT NUMBER	FRACTION OF STACK I.D.	STACK I.D.	PRODUCT OF COLUMNS 2 AND 3 (TO NEAREST 1/8 INCH)	DISTANCE B	TRAVERSE POINT LOCATIO FROM OUTSIDE OF NIPPLE (SUM OF COLUMNS 4 & 5)
	EVERY 6 min				
	TIME	VOLTS	KILO AMPS		
	0947	19.9	1.74		
	0953	19.9	1.74		
	0959	20.0	1.74		
	1005	20.0	1.74		
	1011	20.0	1.75		
	1017	20.0	1.76		
	1023	20.0	1.76		
4 x 4	1029	20.0	1.77		
	1035	—	— PARTS	CHANGE	
	1200	20.0	1.96		
	1206	20.0	1.96		
	1212	20.0	1.94		
	1218	20.0	1.91		
4V	1224	20.0	1.90		
48	1230	26.8	2.27		
90	1236	26.9	2.20		
	1242	26.9	2.11		
	1248	26.9	2.02		
	1254	—	—	1253	PARTS
	1300				REMOVED

EPA (Dur) 232
4/72

Amp hr = 1.90 kamps × 90 min / 60 min/hr = 2,850 amp-hr
1,898
= 1,898 amp

ES ENGINEERING-SCIENCE COMPANIES

FIELD DATA

Plant DAC (BUILDING 5)
Date 9/12/89
Test Site ANODIZE TANK #5 & 4
Run Number 1B
Operator TG / JD

Ambient Temp
Barometer 28.18
Stack Pressure -0.72
Stack H2O %
Stack Dia

Meter ΔH@ 1.74
Meter Gamma 1.01
Meter Box # RB #3
Nozzle Diameter 0.31
Probe Length 2'

Probe Mat'l
Filter Number
Samp Box #
PRE LEAK
POST LEAK

TRAVERSE POINT NUMBER	ELAPSED TIME (mins)	CLOCK TIME	GAS METER READING (Vm)	VELOCITY HEAD (delta p)	ORIFICE PRESSURE (delta H, "H2O) Desired	Actual	TEMPERATURES STACK (Ts)	METER INLET	METER OUT	IMPINGER	FILTER	PUMP VAC. "Hg
	0	948	346.152	.07	0.66	0.66	86	73	73		—	2
	6	954	349.0		0.66	0.66	86	74	73		—	2
	12	1000	351.7		0.66	0.66	86	76	73		—	2
	18	1006	354.5		0.66	0.66	87	78	74		—	2
	24	1012	357.2		0.66	0.66	87	80	75			
	30	1018	360.0		0.66	0.66	87	82	76			
	36	1024	362.7		0.66	0.66	87	83	77			
	42	1030	365.5		0.66	0.66	87	84	78			
	48	1036	368.3		0.66	0.66	87	85	79			
	54	1042	371.0		0.66	0.66	87	86	79			
	60	1048	373.838									
				5.016								
AVERAGE /SUM			27.686			0.66	87	76				

1037 – PIECES REMOVED FROM TANK $\sqrt{\Delta P}$ = 0.812

ES ENGINEERING-SCIENCE COMPANIES

FIELD DATA

Plant DAC - LB
Date 9-12-89
Test Site BLDG 5 TANK 534
Run Number ~~2~~ 13
Operator DALLEY

Ambient Temp
Barometer 28.18
Stack Pressure
Stack H2O %
Stack Dia

Meter ΔH@
Meter Gamma
Meter Box # RED #3
Nozzle Diameter
Probe Length

Probe Mat'l
Filter Number
Samp Box #
PRE LEAK
POST LEAK

TRAVERSE POINT NUMBER	ELAPSED TIME (mins)	CLOCK TIME	GAS METER READING (Vm) .838	VELOCITY HEAD (delta p)	ORIFICE PRESSURE (delta H, "H2O) Desired	Actual	TEMPERATURES STACK (Ts)	METER INLET	METER OUT	IMPINGER	FILTER	PUMP VAC. "Hg
1	0	1200	373.~~878~~	.07	0.66	0.66	88	78	77			2
	6	1206	377.1		0.66	0.66	89	80	78			2
	12	1212	380.0		0.66	0.66	89	82	79			2
	18	1218	382.7		0.66	0.66	89	85	80			2
	24	1224	385.4		0.66	0.66	91	87	81			2
	30	1230	388.3		0.66	0.66	91	88	82			2
	36	1236	390.9		0.66	0.66	91	90	83			
	42	1242	393.8		0.66	0.66	91	91	84			
	48	1248	396.8		0.66	0.66	91	92	85			
	54	1254	399.3		0.66	0.66	92	93	86			
	60	~~1260~~	402.180		0.66	0.66	92	92	87			
AVERAGE /SUM			28.34			0.66	90	87	82			

0.812

ES ENGINEERING-SCIENCE COMPANIES

40 x 34

FIELD DATA

Plant DAC (BUILDING #3)
Date 9/12/89
Test Site ANODIZA TANK 534
Run Number 1A
Operator TG

Ambient Temp
Barometer 28.18
Stack Pressure -0.72
Stack H2O %
Stack Dia

Meter ΔH@ 1.63
Meter Gamma 0.965
Meter Box # REO #2
Nozzle Diameter .30
Probe Length 3'

Probe Mat'l
Filter Number
Samp Box #
PRE LEAK
POST LEAK

TRAVERSE POINT NUMBER	ELAPSED TIME (mins)	CLOCK TIME	GAS METER READING (Vm)	VELOCITY HEAD (delta p)	ORIFICE PRESSURE (delta H, "H2O) Desired	Actual	TEMPERATURES STACK (Ts)	METER INLET	METER OUT	IMPINGER	~~FILTER~~	PUMP VAC. "Hg
	0	948	686.343	.57	0.67	0.67	86	75			—	2
	6	954	689.4		0.67	0.67	86	75			—	2
	12	1000	692.3		0.67	0.67	86	77			—	2
	18	1006	695.4		0.67	0.67	87	79			—	3
	24	1012	698.4		0.67	0.67	87	83				
	30	1018	701.4		0.67	0.67	87	87				
	36	1024	704.4		0.67	0.67	87	90				
	42	1030	707.4		0.67	0.67	87	93				
	48	1036	710.4		0.67	0.67	87	96				
	54	1042	713.5		0.67	0.67	87	97				
	60	1048	716.548									
				61.3/11								
AVERAGE /SUM			30.205			0.67	87	78				

$\sqrt{\Delta p} = 0.819$

ES ENGINEERING-SCIENCE COMPANIES

FIELD DATA

Plant DAC-CB
Date 9-12-89
Test Site BLDG 5 TANK 534
Run Number A
Operator DAILEY

Ambient Temp
Barometer 28.18
Stack Pressure
Stack H2O %
Stack Dia

Meter ΔH@
Meter Gamma
Meter Box # RED #2
Nozzle Diameter
Probe Length

Probe Mat'l SS
Filter Number
Samp Box #
PRE LEAK
POST LEAK

TRAVERSE POINT NUMBER	ELAPSED TIME (mins)	CLOCK TIME	GAS METER READING (Vm)	VELOCITY HEAD (delta p)	ORIFICE PRESSURE (delta H, "H2O) Desired	Actual	TEMPERATURES STACK (Ts)	METER INLET	METER OUT	IMPINGER	FILTER	PUMP VAC. "Hg
1	0	1200	716.588		0.67	0.67	88	83				2
	6	1206	720.0		0.67	0.67	89	85				2
	12	1212	723.2		0.67	0.67	89	88				2
	18	1218	726.3		0.67	0.67	89	91				2
	24	1224	729.3		0.67	0.67	91	94				2
	30	1230	732.3		0.67	0.67	91	97				2
	36	1236	736.3		0.67	0.67	91	99				
	42	1242	734.3		0.67	0.67	91	101				
	48	1248	741.7		0.67	0.67	91	103				
	54	1254	744.6		0.67	0.67	92	104				
	60	1300	747.654		0.67	0.67	92	103				
AVERAGE /SUM			31.06			0.67	90	95				

0.819

ENGINEERING-SCIENCE, INC.

TRAIN RECOVERY SHEET

DATE 9-12-89

RUN# 1A METHOD 205.1

FACILITY DOUGLAS AIRCRAFT TANK 534

TYPE Hexchrome/Total Chrom

TECHNICIAN RM

IMP. SOLUTION 0.02N $NAHCO_3$

	SOLUTION	VOL. (ml)	DESCRIPTION
NOZZLE-PROBE RINSE			
UMBILICAL RINSE			

		FINAL (g)	INITIAL (g)	NET (g)
IMPINGER # 1	$NAHCO_3$	577.2	565.8	11.4
IMPINGER # 2	$NAHCO_3$	566.3	566.2	0.1
IMPINGER # 3	EMPTY	524.6	523.9	0.7
IMPINGER #				
DESCRIPTION				
IMPINGER RINSE				

		FINAL (g)	INITIAL (g)	
SILICA GEL (DESCRIPTION)	1/4 USED	859.9	846.0	13.9
FILTER# (DESCRIPTION)		TOTAL MOISTURE		26.1 (g)

FIELD BLANKS CHROME #6

DISPOSITION/COMMENTS

ES#890421

ENGINEERING-SCIENCE, INC.

TRAIN RECOVERY SHEET

DATE 9-12-89

RUN# 1B METHOD 205.1

FACILITY DOUGLAS (L.B) TANK ~~543~~ 534

TYPE Hexchrome/Total

TECHNICIAN RM

IMP. SOLUTION 0.02 N $NaHCO_3$

	SOLUTION	VOL. (ml)	DESCRIPTION
NOZZLE-PROBE RINSE			
UMBILICAL RINSE			

		FINAL (g)	INITIAL(g)	NET(g)
IMPINGER # 1	$NaHCO_3$	612.4	597.0	15.4
IMPINGER # 2	$NaHCO_3$	592.8	591.7	1.1
IMPINGER # 3	Empty	488.4	487.7	0.7
IMPINGER #				
DESCRIPTION				
IMPINGER RINSE				

		FINAL (g)	INITIAL(g)	
SILICA GEL (DESCRIPTION)	Silica 1/4 USED	809.8	798.2	11.6
FILTER# (DESCRIPTION)		TOTAL MOISTURE		28.8 (g)

FIELD BLANKS

DISPOSITION/COMMENTS

APPENDIX C

HEXAVALENT CHROMIUM AND TOTAL CHROMIUM LAB RESULTS

Received: 08/24/89

8(21-22) 10-X
#370

TMA Inc. REPORT Work Order # 89-08-132

09/14/89 12:07:40

REPORT TO
Engineering Science
75 N. Fair Oaks Ave.
P.O. Box 7107
Pasadena, CA 91109
ATTEN Mr. Rollie Rosario

PREPARED BY
Thermo Analytical, Inc.
160 Taylor Street
Monrovia, CA 91016
ATTEN
PHONE 818-357-3247

CERTIFIED BY Shirley Kirby
CONTACT TWS

CLIENT ENGINEER SCI SAMPLES 9
COMPANY Engineering Science
FACILITY

This report is for the sole and exclusive use of the client to whom it is addressed and represents only those samples herein described. Samples not destroyed in testing are retained a maximum of 30 days unless otherwise requested.

WORK ID WA099 MD Long Beach
TAKEN By Engineering Science Staff
TRANS By Engineering Science Staff
TYPE Liquids
P.O. # WA099 MD Long Beach
INVOICE under separate cover

SAMPLE IDENTIFICATION

01 890851
02 890854
03 890855
04 890856
05 890857
06 890858
07 890859
08 890860
09 890861

TEST CODES and NAMES used on this report

CR HEX Hexavalent Chromium
CR LF Chromium by HGF - Liquids

Received: 08/24/89

TMA Inc. REPORT

Results by Sample

Work Order # 89-08-132

SAMPLE ID 890851 ✓

310 ppm

CR_HEX 0.31 mg/L CR_LF 0.341 mg/L

SAMPLE # 01 FRACTIONS: A

Date & Time Collected 08/22/89 Category

SAMPLE ID 890854 ✓

CR_HEX <.003 mg/L CR_LF 0.009 mg/L

SAMPLE # 02 FRACTIONS: A

Date & Time Collected 08/22/89 Category

SAMPLE ID 890855 ✓

CR_HEX <.003 mg/L CR_LF 0.019 mg/L

SAMPLE # 03 FRACTIONS: A

Date & Time Collected 08/22/89 Category

SAMPLE ID 890856 ✓

CR_HEX <.003 mg/L CR_LF 0.008 mg/L

SAMPLE # 04 FRACTIONS: A

Date & Time Collected 08/22/89 Category

Received: 08/24/89

TMA Inc. REPORT

Results by Sample

Work Order # 89-08-132

SAMPLE ID 890857 ✓ SAMPLE # 05 FRACTIONS: A
Date & Time Collected 08/22/89 Category

CR_HEX <.003 mg/L CR_LF 0.031 mg/L

SAMPLE ID 890858 ✓ SAMPLE # 06 FRACTIONS: A
Date & Time Collected 08/22/89 Category

CR_HEX <.003 mg/L CR_LF 0.006 mg/L

SAMPLE ID 890859 ✓ SAMPLE # 07 FRACTIONS: A
Date & Time Collected 08/22/89 Category

CR_HEX <.003 mg/L CR_LF 0.002 mg/L

SAMPLE ID 890860 ✓ SAMPLE # 08 FRACTIONS: A
Date & Time Collected 08/22/89 Category

CR_HEX <.003 mg/L CR_LF 0.002 mg/L

Received: 08/24/89

TMA Inc. REPORT
Results by Sample

Work Order # 89-08-132

SAMPLE ID 890861 ✓

SAMPLE # 09 FRACTIONS: A
Date & Time Collected 08/22/89 Category

CR_HEX <.003 mg/L CR_LF 0.009 mg/L R

Received: 08/24/89

TMA Inc. REPORT
09/14/89 12:07:40

Work Order # 89-08-132

Engineering Science

Hexavalent chromium analysis was done by Method 312 B. "Standard Methods for the Examination of Water and Waste water" 16th Edition. The samples are read on a Perkin Elmer 124 Spectrotometer utilizing a 100mm cell resulting in a detection limit of .003 mg/l

Received: 08/31/89

TMA Inc. REPORT
09/14/89 11:37:30

Work Order # 89-08-168

REPORT TO: Engineering Science
75 N. Fair Oaks Ave.
P.O. Box 7107
Pasadena, CA 91109
ATTEN: Mr. Rollie Rosario

CLIENT: ENGINEER SCI SAMPLES: 2
COMPANY: Engineering Science
FACILITY:

WORK ID: WA099 Douglas Long Beach
TAKEN: By Engineering Science Staff
TRANS: By Engineering Science Staff
TYPE: Liquids
P.O. #: WA099 Douglas Long Beach
INVOICE: under separate cover

PREPARED BY: Thermo Analytical, Inc.
160 Taylor Street
Monrovia, CA 91016

ATTEN:
PHONE: 818-357-3247

Shirley Kirby
CERTIFIED BY

CONTACT: SAK

This report is for the sole and exclusive use of the client to whom it is addressed and represents only those samples herein described. Samples not destroyed in testing are retained a maximum of 30 days unless otherwise requested.

SAMPLE IDENTIFICATION

01 890892
02 890893

TEST CODES and NAMES used on this report

CR HEX Hexavalent Chromium
CR L Chromium - Liquids

Received: 08/31/89

TMA Inc. REPORT

Work Order # 89-08-168

Results by Sample

SAMPLE ID 890892 SAMPLE # 01 FRACTIONS: A
Date & Time Collected 08/30/89 Category

CR_HEX <0.003 mg/L CR_L <0.002 mg/L

SAMPLE ID 890893 SAMPLE # 02 FRACTIONS: A
Date & Time Collected 08/30/89 Category

CR_HEX <0.003 mg/L CR_L <0.002 mg/L

Received: 09/01/89

TMA Inc. REPORT
09/14/89 10:53:31

Work Order # 89-09-010

REPORT TO
Engineering Science
75 N. Fair Oaks Ave.
P.O. Box 7107
Pasadena, CA 91109
ATTEN Mr. Rollie Rosario

PREPARED BY
Thermo Analytical, Inc.
160 Taylor Street
Monrovia, CA 91016

ATTEN
PHONE 818-357-3247

CERTIFIED BY Shirley Kirby

CONTACT SAK

CLIENT ENGINEER SCI SAMPLES 6
COMPANY Engineering Science
FACILITY

This report is for the sole and exclusive use of the client to whom it is addressed and represents only those samples herein described. Samples not destroyed in testing are retained a maximum of 30 days unless otherwise requested.

WORK ID WA099
TAKEN By Engineering Science Staff
TRANS By Engineering Science Staff
TYPE Liquids
P.O. # WA097
INVOICE under separate cover

SAMPLE IDENTIFICATION

01 8908104
02 8908106
03 8908108
04 8908107
05 8908109
06 8908105

TEST CODES and NAMES used on this report

CR HEX Hexavalent Chromium
CR LF Chromium by HGF - Liquids

Received: 09/01/89

TMA Inc. REPORT

Work Order # 89-09-010

Results by Sample

SAMPLE ID 8908104

SAMPLE # 01 FRACTIONS: A
Date & Time Collected not specified Category

CR_HEX <.003 mg/L CR_LF 0.005 mg/L

SAMPLE ID 8908106

1000 µgm

SAMPLE # 02 FRACTIONS: A
Date & Time Collected not specified Category

CR_HEX 1.00 mg/L CR_LF 0.89 mg/L

SAMPLE ID 8908108

1440 µgm

SAMPLE # 03 FRACTIONS: A
Date & Time Collected not specified Category

CR_HEX 1.44 mg/L CR_LF 1.67 mg/L

SAMPLE ID 8908107

1250 µgm

SAMPLE # 04 FRACTIONS: A
Date & Time Collected not specified Category

CR_HEX 1.25 mg/L CR_LF 1.44 mg/L

Received: 09/01/89

TMA Inc. REPORT
Results by Sample

Work Order # 89-09-010

SAMPLE ID 8908109

SAMPLE # 05 FRACTIONS: A
Date & Time Collected not specified Category

CR_HEX <.003 mg/L CR_LF 0.004 mg/L

SAMPLE ID 8908105

SAMPLE # 06 FRACTIONS: A
Date & Time Collected not specified Category

960 µgm

CR_HEX 0.96 mg/L CR_LF 1.00 mg/L

Page 1
Received: 9/08/89 9-7-89 Tim Inc.

REPORT
09/15/89 10:59:49

Work Order # 89-730

REPORT TO
Engineering Science
75 N. Fair Oaks Ave.
P.O. Box 7107
Pasadena, CA 91109
ATTEN Mr. Rollie Rosario

PREPARED BY
Thermo Analytical, Inc.
160 Taylor Street
Monrovia, CA 91016

CERTIFIED BY Shirley Kirby

ATTEN
PHONE 818-357-3247

CONTACT SAK

CLIENT ENGINEER SCI SAMPLES 5
COMPANY Engineering Science
FACILITY

This report is for the sole and exclusive use of the client to whom it is addressed and represents only those samples herein described. Samples not destroyed in testing are retained a maximum of 30 days unless otherwise requested.

WORK ID WA099 Douglas
TAKEN By Enginering Science Staff
TRANS By Enginering Science Staff
TYPE Liquids
P.O. # Verbal
INVOICE under separate cover

SAMPLE IDENTIFICATION

01 890907
02 890908
03 890909
04 890910
05 890911 — TANK Sky Marion

TANK 534 listed 9-7-89

TEST CODES and NAMES used on this report

CR HEX Hexavalent Chromium
CR L Chromium - Liquids

Received: 09/08/89

Tim Inc. REPORT Work Order # 89-[illegible]

Results by Sample

SAMPLE ID 890907 SAMPLE # 01 FRACTIONS: A
Date & Time Collected 09/07/89 Category

CR_HEX <.003 mg/L CR_L 0.003 mg/L

SAMPLE ID 890908 SAMPLE # 02 FRACTIONS: A
Date & Time Collected 09/07/89 Category

CR_HEX <.003 mg/L CR_L 0.005 mg/L

SAMPLE ID 890909 SAMPLE # 03 FRACTIONS: A
Date & Time Collected 09/07/89 Category

CR_HEX <.003 mg/L CR_L 0.036 mg/L

SAMPLE ID 890910 SAMPLE # 04 FRACTIONS: A
Date & Time Collected 09/07/89 Category

CR_HEX <.003 mg/L CR_L 0.081 mg/L

Received: 09/08/89

TMA Inc. REPORT
Results by Sample

Work order # 89-0 35

SAMPLE ID 890911

SAMPLE # 05 FRACTIONS: A
Date & Time Collected 09/07/89 Category

290 µg

CR_HEX 0.29 mg/L CR_L 0.26 mg/L

Received: 09/08/89

TMA Inc. REPORT
NonReported Work

Work order # 89-0[illegible]

FRACTION AND TEST CODES FOR WORK NOT REPORTED ELSEWHERE

01A	I	MPREPW
02A	I	MPREPW
03A	I	MPREPW
04A	I	MPREPW
05A	I	MPREPW

Received: 9/13/89

TMA Inc. REPORT
09/22/89 57:16

Work Order # 89-09-050

REPORT TO: Engineering Science
75 N. Fair Oaks Ave.
P.O. Box 7107
Pasadena, CA 91109

ATTEN: Mr. Mike Edwards

PREPARED BY: Thermo Analytical, Inc.
160 Taylor Street
Monrovia, CA 91016

T. Shutts
CERTIFIED BY

ATTEN
PHONE: 818-357-3247

CONTACT: TWS

CLIENT: ENGINEER SCI
SAMPLES: 3
COMPANY: Engineering Science
FACILITY:

This report is for the sole and exclusive use of the client to whom it is addressed and represents only those samples herein described. Samples not destroyed in testing are retained a maximum of 30 days unless otherwise requested.

WORK ID: WA099 Douglas Aircraft
TAKEN: Engineering Science staff
TRANS: Engineering Science staff
TYPE: Liquid
P.O. #: ESO 9332-6014
INVOICE: under separate cover

Send copy of report to Mr. Robert Mazurek @ Engineering Science, 75 N. Fair Oaks Ave., P.O. Box 7107, Pasadena, CA 91109.

SAMPLE IDENTIFICATION

01 890919 Field blank
02 890920 Tank 543 run 1A.
03 890921 Tank 543 run 1B.

534 RK

TEST CODES and NAMES used on this report

CR HEX Hexavalent Chromium
CR LF Chromium by HGF - Liquids

Received: /13/89

H... INC. RE... Work Order # 89-...-05

Results by Sample

SAMPLE ID 890919 Field blank — SAMPLE # 01 FRACTIONS: A
Date & Time Collected 09/12/89 — Category

CR_HEX <.003 mg/L CR_LF 0.004 mg/L

SAMPLE ID 890920 Tank 543 run 1A. — SAMPLE # 02 FRACTIONS: A
Date & Time Collected 09/12/89 — Category

2240 µgm

CR_HEX 2.24 mg/L CR_LF 2.73 mg/L

SAMPLE ID 890921 Tank 548 run 1B. — SAMPLE # 03 FRACTIONS: A
Date & Time Collected 09/12/89 — Category

2340 µgm

CR_HEX 2.34 mg/L CR_LF 2.80 mg/L

534 RL

Received: 01/13/89

Tm Inc. RE.ORT Work Order # 89-0, 056

NonReported Work

FRACTION AND TEST CODES FOR WORK NOT REPORTED ELSEWHERE

01A	I	MPREPW
02A	I	MPREPW
03A	I	MPREPW

eceived: 08/24/89

TMA Inc. REPORT
Results by Sample

Work Order # 89-08-132

SAMPLE ID 890861

SAMPLE # 09 FRACTIONS: A
Date & Time Collected 08/22/89 Category

CR_HEX <.003 mg/L CR_LF 0.009 mg/L

Re ✓ .013 mg/l

To: Robert Mazerek

From: T. Shultz
TMA/ARLI

Subject: Total Chromium Re-checks

Received: 08/24/89

TMA Inc. REPORT
Results by Sample

Work Order # 89-08-132

SAMPLE ID 890851

310 µgm/l

CR_HEX 0.31 mg/L CR_LF 0.341 mg/L

SAMPLE # 01 FRACTIONS: A
Date & Time Collected 08/22/89 Raw = 0.3pms Category

Re ✓ 0.386 mg/l Dup 0.413 mg/l Spike 104% Recovery

SAMPLE ID 890854

CR_HEX <.003 mg/L CR_LF 0.009 mg/L

SAMPLE # 02 FRACTIONS: A
Date & Time Collected 08/22/89 Category

Re ✓ .010 mg/l

SAMPLE ID 890855

CR_HEX <.003 mg/L CR_LF 0.019 mg/L

SAMPLE # 03 FRACTIONS: A
Date & Time Collected 08/22/89 Category

Re ✓ .026 mg/l

SAMPLE ID 890856

CR_HEX <.003 mg/L CR_LF 0.008 mg/L

SAMPLE # 04 FRACTIONS: A
Date & Time Collected 08/22/89 Category

Re ✓ .008 mg/l

Received: 08/24/89

TMA Inc. REPORT
Results by Sample

Work Order # 89-08-132

SAMPLE ID 890857

CR_HEX <.003 mg/L CR_LF 0.031 mg/L

SAMPLE # 05 FRACTIONS: A
Date & Time Collected 08/22/89 Category

Re ✓ .034 mg/l

SAMPLE ID 890858

CR_HEX <.003 mg/L CR_LF 0.006 mg/L

SAMPLE # 06 FRACTIONS: A
Date & Time Collected 08/22/89 Category

Re ✓ .008 mg/l

SAMPLE ID 890859

CR_HEX <.003 mg/L CR_LF 0.002 mg/L

SAMPLE # 07 FRACTIONS: A
Date & Time Collected 08/22/89 Category

Re ✓ <.001 mg/l

SAMPLE ID 890860

CR_HEX <.003 mg/L CR_LF 0.002 mg/L

SAMPLE # 08 FRACTIONS: A
Date & Time Collected 08/22/89 Category

Re ✓ <.001 mg/l

APPENDIX D

PROCESS DATA

ES ENGINEERING-SCIENCE

Client DAC 9-7-89 Job No. Sheet ___ of ___

Subject By G.Tom + RA Date

Checked Rev.

I. - Run #1 : Uncontrolled CrO_3 Anodize for 1 hr.

Wt of parts

304.5
41.9
283.4
73.3
+ 18 x 15.3
928.5 g ✓

2. Run # 2 : Foam + Balls weight in grams

1st hr : 928.5 g
2nd hr : 921.0 g
+ 832.4
+ 87.0
67.4

3rd hr 226.3
300.5
304.5
273.5
274.6

✓
4315.7

ES ENGINEERING-SCIENCE

Date 9-7-89

Client DAC Long Beach

Subject Test Tricid etch T-353

Job No.

By

Checked

Sheet ___ of ___

Date

Rev.

1. Process wt.

Uncontrolled - 1 hr. Start: 8:30 A.M.

642 g x 19 parts = 12198 / Process wt in grams

Balls - 1 hr.

600 g/part x 19 parts = 11400

Antimist additive - 2 hrs. 650 ml / 100 gal.

558 g x 19 parts = 10602

ENGINEERING-SCIENCE

Client _____ Job No. 8,2289 Sheet ___ of ___

Subject _____ By _____ Date _____

Checked _____ Rev. _____

3. Run #3 : ~~Antimist + Foam~~ Foam Only

Run #1 305.7 ← 1st hour
197.6
273.5
274.6
220.0
180.7

104.5 2nd hour
178.6
87.0
743.1

723.2 3rd hour
832.4
86.1
283.4

4490.4 ✓

4. Run #4 : Foam + Antimist Additive

1st Hr. : 2 x 980 =
1960 g ✓

2nd Hr : 610.6
45.6
251.9
174.3

3rd Hr : 4 x 980 g = 3920 g.

6960.4

ES COP 8 (5/89)

SUMMARY OF EXAMPLE CALCULATIONS
BUILDINGS 3 AND 5 TESTS

DOUGLAS AIRCRAFT CORPORATION
Long Beach, California

ES No.	mg/l Hex-Cr.	mg/l Total Cr	l/sample	mg Hex-Cr.	mg Total Cr.	DSCF	DSCFM	mg/hr Hex-Cr	mg/hr Total Cr.
Table 1 - Tank No. 370 - August 21-22 1989									
890851	0.310	0.341	0.6730	0.2086	0.2281	46.032	1,369	372.3	407.0
890854	<0.003	0.009	0.4534	<0.0014	0.0032	128.927	1,340	<0.9	1.8
890855	<0.003	0.026	0.4084	<0.0025	0.0143	118.785	1,339	<1.8	9.5
890861	<0.003	0.013	0.4100						
890856	<0.003	0.008	0.8286	<0.0025	0.0050	103.038	1,332	<1.8	4.1
890857	<0.003	0.031	0.8525	<0.0026	0.0247	136.582	1,335	<1.4	14.5
890858	<0.003	0.006	0.7118	<0.0021	0.0028	125.067	1,335	<1.4	1.8
890859	<0.003	0.002	0.4377	NA	NA	NA	NA	NA	NA
890860	<0.003	0.002	0.4329	NA	NA	NA	NA	NA	NA

Notes: Field blank value of <0.003 mg/l subtracted from hexavalent chromium analytical results
Field blank value of 0.002 mg/l subtracted from total chromium analytical results
NA, not applicable.

SUMMARY OF EXAMPLE CALCULATIONS
BUILDINGS 3 AND 5 TESTS

DOUGLAS AIRCRAFT CORPORATION
Long Beach, California

ES No.	mg/l Hex-Cr.	mg/l Total Cr	l/sample	mg Hex-Cr.	mg Total Cr.	DSCF	DSCFM	mg/hr Hex-Cr	mg/hr Total Cr.
Table 2 - Tank No. 370 - August 30-31 1989									
890892	<0.003	<0.002	0.684	<0.0021	<0.0014	171.377	1,233	<0.91	<0.604
890893	<0.003	<0.002	0.559	<0.0017	<0.0011	187.498	1,233	<0.67	<0.434
8908105	0.96	1.00	0.757	0.7267	0.7555	113.780	1,168	447.59	465.33
8908106	1.00	0.89	0.763	0.7630	0.6775	119.504	1,160	444.38	394.58
8908107	1.25	1.44	0.786	0.9825	1.1303	51.278	1,170	1345.05	1547.39
8908108	1.44	1.67	0.852	1.2269	1.4211	60.435	1,177	1433.64	1660.64

Notes: Field blank value of <0.003 mg/l subtracted from hexavalent chromium analytical results
Field blank value of 0.002 mg/l subtracted from total chromium analytical results
NA, not applicable.

SUMMARY OF EXAMPLE CALCULATIONS
BUILDINGS 3 AND 5 TESTS

DOUGLAS AIRCRAFT CORPORATION
Long Beach, California

ES No.	mg/l Hex-Cr.	mg/l Total Cr	l/sample	mg Hex-Cr.	mg Total Cr.	DSCF	DSCFM	mg/hr Hex-Cr	mg/hr Total Cr.
Table 3 - Tank No. 370 - September 7 1989									
890908	<0.003	0.005	0.5246	<0.0016	0.0016	61.391	928	<1.45	1.45
890909	<0.003	0.030	0.6620	<0.0020	0.0225	61.296	927	<1.81	20.42
890910	<0.003	0.081	0.5900	<0.0018	0.0466	124.602	929	<0.81	20.85
Table 4 - Tank No. 370 - August 30-31 1989									
8908104	<0.003	0.005	0.7635	<0.0023	0.0023	30.476	9,234	<41.81	41.81
Table 5 - Tank No. 370 - September 11 1989									
890920	2.24	2.73	0.6105	1.3675	1.6545	53.341	7,609	11,704.29	14,160.69
890521	2.34	2.80	0.5970	1.3970	1.6597	51.222	7,588	12,417.05	14,752.02

DAC Example Calculations

1 mass of chromium

$$\text{mg Cr} = \left(\text{Cr}(\text{mg/l}) - \text{blank}_{\text{Cr}}(\text{mg/l})\right) \times V_{\text{liquid}}(\text{l})$$

where: Appendix C
- Cr (mg/l) = Lab analysis: hex-chromium / total-chromium
- Cr blank (mg/l) = <0.003 mg/l hex-Cr; 0.002 mg/l total-Cr

Appendix F: V liquid = Chain of Custody

example 890851 = (0.31 mg/l − <0.003 mg/l) (0.673)
= 0.2086 mg hex-Cr

2 mg/hr of chromium

Appendix A: lb/hr Cr = Computer Printouts

$$\text{where: } \frac{\text{mg}}{\text{DSCF}(ft^3)} \times \frac{\text{gram}}{10^3\,\text{mg}} \times \frac{\text{lb}}{454\,\text{gm}} \times \frac{ft^3}{\text{min}} \times \frac{60\ \text{min}}{\text{hr}}$$

DSCFM

example 890851 Tank 370 uncontrolled

$$= \frac{0.2086}{46.03V} \times \frac{1}{10^3} \times \frac{60}{454} \times 1369$$

SUMMARY OF SAMPLE NUMBERS
AUGUST 21 - SEPTEMBER 11, 1989

DOUGLAS AIRCRAFT CORPORATION
Long Beach, California

ES Lab. No.	Control Measure	Comments
Table 1 - Tank #370 - August 21-22, 1989		
890851	Uncontrolled	
890854	Foam + Balls	Run A, Top Port
890855	" "	Run B, Bottom Port
890861	" "	Run B, Split
890856	Foam	Run A, Top Port
890857	"	Run B, Bottom Port
890858	Foam + Anti-Mist	
89859	Field Blank	
890860	Lab Blank	
Table 2 -Tank #370 -August 30-31, 1989		
890892	Foam + Anti-Mist	Run A
890893	" "	Run B
8908105	Balls	Run A
8908106	"	Run B
Table 3 - Tank #353 - September 11, 1989		
890908	Uncontrolled	
890909	Balls	
890910	Anti-Mist	
Table 4 - Tank #541 - August 31, 1989		
8908104	Uncontrolled	
Table 5 - Tank #534 - September 11, 1989		
890920	Uncontrolled	Run A
890921	"	Run B

APPENDIX E

EXAMPLE CALCULATIONS

ES ENGINEERING-SCIENCE

Client: DMC
Subject: mg / amp-hr Example Calcs
Job No.:
By: RR
Checked:
Sheet 1 of 3
Date: 10-4-79
Rev.:

Table 5

Run B — 2 Batches of material

mg/hr: Computer print out Appendix A

Cr^{6} $= \left(\frac{lb}{hr} \times 10^{-4}\right)\left(\frac{454 \times 10^{3}\ mg}{lb}\right)$

$= (273.81 \times 10^{-4})(454 \times 10^{3})$

$= 12430.97$

$= 17431$ mg/hr

Cr^{total} = same as above calcs and rounding off

$= 14864$ mg/hr

amperes: Six minute readings Appendix B

Ampere-minutes $= \sum \left(\frac{K\text{-amps} \times 10^{3}\ amp}{10\ amp}\right)(\text{time interval})$

	$\times 10^{3}$	$\times 10^{3}$
1	(1.74)(6)	1.96 (6)
2	(1.74)(6)	1.95 (6)
3	(1.74)(6)	1.94 (6)
4	(1.74)(6)	1.94 (6)
5	(1.755)(6)	2.085 (6)
		2.125 (6)
6	(1.76)(6)	2.155 (6)
7	(1.765)(6)	2.160 (6)
47 minutes		48 minutes
	171.170×10^{3}	amps

$= 0.00082 \text{ lb/hr}$ — ✓

$$\text{mg/hr} = \frac{\text{lb}}{\text{hr}} \times \frac{454 \text{ gram}}{\text{lb}} \times \frac{10^3 \text{ mg}}{\text{gram}}$$

$$= 0.00082 \times 454 \times 10^3$$

$$= 372.28$$

$$\approx 372.3$$

ES ENGINEERING-SCIENCE

Client: DRC
Subject: Example Calcs mg / amp-hr

Job No.:
By: PR
Checked:

Sheet 2 of 3
Date: 10-4-8
Rev.:

171120 ampere - minutes ≈ 90 minute application

$$\approx \frac{171120 \text{ amp-minutes}}{90 \text{ minutes - test}}$$

≈ 1901.33 amps / test

Amp-hr for test

$$\approx 1901.33 \text{ amps/test} \times \frac{90 \text{ min}}{60 \text{ min/hr}}$$

≈ 2851.99 amp-hr

≈ 2852 amp-hr

$$\frac{\text{mg / Amp-hr}}{\text{Basis: total mg}}$$

Or ① total mg = $12431 \frac{\text{mg}}{\text{hr}} \times 1.5 \frac{\text{hr}}{\text{test}}$

= 18646.5 mg

$$\text{mg/amp-hr} = \frac{18646.5 \text{ mg}}{2852 \text{ amp-hr}}$$

= 6.538 mg/amp hr

② Basis: mg/hr

= mg/hr / amps

ES-COR-8 (5/88)

ES ENGINEERING-SCIENCE

Client: DAC

Subject: Example Calcs

Job No.:

By: RR

Checked:

Sheet 3 of 3

Date: 10-4-

Rev.:

$$\approx \frac{12431}{1901.33}$$

$$= 6.538 \text{ mg/amp-hr}$$

ES-COR-8 (5/88)

APPENDIX F

QUALITY ASSURANCE

ENGINEERING SCIENCE, INC.
75 N. Fair Oaks Ave.
Pasadena, California
(818) 440-6000

CHAIN OF CUSTODY RECORD

08-24-89

Project No.	Project Name	Project Manager
WA099	MD LONG BEACH	R.R.

Samples Collected By: Phone:

ANALYSIS REQUIRED: Cr 6 | Total Cr

SENT TO: ARLI
SHIPPED VIA: } J.B.
SHIPPED BY:

ES Lab No.	Test Date	Sample Description (Container, Media, Volume, etc.)	Cr 6	Total Cr		VOLUME			Remarks
	08-22-89	890851 UNCONTROLLED	✓	✓		673.0 ml		✓	c/o TOM SCHULTZ ?
	08-22-89	890854 BF TOP	✓	✓		453.4		✓	SHULTZ ?
	08	890855 BF MIDDLE	✓	✓		408.4		✓	
	"	890856 F TOP	✓	✓		578.6		✓	Hex Chrome results
	"	890857 F BOTTOM	✓	✓		575.5		✓	in 24 hours
	"	890858 FA TOP	✓	✓		711.8		✓	
	"	890859 Field Blank	✓	✓		437.1			Total chrome to
	"	890860 Lab Blank	✓	✓		437.9			follow
	"	890861 Split-855	✓	✓		~~473.~~ 410.0 ml		✓	

Relinquished by:	Date/Time	Received by:	Reason for Exchange:	Comments:
Phone: R Russin	8-23-89	Of: JB	TRANSPORT	
Relinquished by: Joel Bryant Phone: 440-6014	Date/Time 8-24-89 8:00	Received by: Nicole Of: TMA/ARLI	Reason for Exchange: ANALYSIS	Comments:
Relinquished by: Phone:	Date/Time	Received by: Of:	Reason for Exchange:	Comments:
Relinquished by: Phone:	Date/Time	Received by: Of:	Reason for Exchange:	Comments:

ENGINEERING SCIENCE, INC.
75 N. Fair Oaks Ave.
Pasadena, California
(818) 440-6000

CHAIN OF CUSTODY RECORD

Project No.	Project Name	Project Manager
WA 099	DOUGLAS Long Beach	L. COTONE
Samples Collected By: L. COTONE		Phone: 440-6161

SENT TO: TMS ARCI
ATTN: Tom Scholz
SHIPPED VIA:
SHIPPED BY: RM

ES Lab No.	Test Date	Sample Description (Container, Media, Volume, etc.)	Hexavalent Chrome	Total Chrome		Volume mL					Remarks
890892	8-30-89	CHROME TRAIN FOAM + ADDITIVE 1A	✓	✓		68A					
890893	"	" " " " 1B	✓	✓		559					

Relinquished by:	Date/Time	Received by:	Reason for Exchange:	Comments:
Phone: 440-6614	8-31-89	Of: TMS		
Relinquished by: Phone:	Date/Time	Received by: Of:	Reason for Exchange:	Comments:
Relinquished by: Phone:	Date/Time	Received by: Of:	Reason for Exchange:	Comments:
Relinquished by: Phone:	Date/Time	Received by: Of:	Reason for Exchange:	Comments:

ENGINEERING SCIENCE, INC.
75 N. Fair Oaks Ave.
Pasadena, California
(818)440-6000

CHAIN OF CUSTODY RECORD

Project No.	Project Name	Project Manager
WA099	DAC LONG BEACH	COTTONE

Samples Collected By: COTTONE
Phone: 4426085

SENT TO: ARLI (JMA)
SHIPPED VIA:
SHIPPED BY:

ES Lab No.	Test Date	Sample Description (Container, Media, Volume, etc.)	CR 6	CR Total	Volume mL						Remarks
8908104	8/31	TANK 5#1	X	X	763.5 ✓						
106	8/31	BALLS - 1B	X	X	763						
105	8/31	BALLS - 1A	X	X	757						
108	8/31	U - 1B	X	X	852						
107	8/31	U - 1A	X	X	786						
104	"	FIELD BLANK	X	X	392						

Relinquished by:	Date/Time	Received by:	Reason for Exchange:	Comments:
J. Otto Phone:	8/31/89 6 PM	R. Maecker Of:	ANALYSIS	
Robert Maecker Phone:	9-1-89 11:30	Received by: Of:	Reason for Exchange:	Comments:
Relinquished by: Phone:	Date/Time 9-1-89 12:00	Received by: Of: Enviro/Arc.	Reason for Exchange:	Comments:
Relinquished by: Phone:	Date/Time	Received by: Of:	Reason for Exchange:	Comments:

ENGINEERING SCIENCE, INC.
75 N. Fair Oaks Ave.
Pasadena, California
(818) 440-6000

CHAIN OF CUSTODY RECORD

Project No.	Project Name	Project Manager
WA099	DOUGLAS (L.B)	

Samples Collected By: ME/RM/BR

Phone: (818) 440-6010

SENT TO: TMA ARLI

SHIPPED VIA:

SHIPPED BY:

ES Lab No.	Test Date	Sample Description (Container, Media, Volume, etc.)	HEXCHROME	TOTAL CHROME		SAMPLE VOLUME mL					Remarks
890907	9-7-89	BUILDING 3 FIELD BLANK	✓	✓		770					C/O TOM SUNDRE
890908	"	" " UNCONTROLLED	✓	✓		524.6					24 hrs turn-around
890909	"	" " with balls	✓	✓		662					on hex chrome
890910	"	" " with Anti MIST	✓	✓		590					
890911	"	BUILDING 5 TANK 534	✓	✓		795					

Relinquished by:	Date/Time	Received by:	Reason for Exchange:	Comments:
ROBERT MAZUREK Phone: (818) 440-604	9-8-89 10:15	JON DAILEY Of: E.-S.		
Relinquished by: Phone:	Date/Time 9-8-89 1:30	Received by: Of: TMA/ARLI	Reason for Exchange:	Comments:
Relinquished by: Phone:	Date/Time	Received by: Of:	Reason for Exchange:	Comments:
Relinquished by: Phone:	Date/Time	Received by: Of:	Reason for Exchange:	Comments:

ENGINEERING SCIENCE, INC.
75 N. Fair Oaks Ave.
Pasadena, California
(818)440-6000

CHAIN OF CUSTODY RECORD

Project No.	Project Name	Project Manager
WA099	DOUGLAS AIRCRAFT	MIKE EDWARDS

Samples Collected By: RR/JD
Phone: (818)440-6010

SENT TO: TMA ARLI
ATTN: TOM SCHOLTZ
SHIPPED VIA: ES Vehical
SHIPPED BY: RM

ANALYSIS REQUIRED

ES Lab No.	Test Date	Sample Description (Container, Media, Volume, etc.)		HEXCHROME	TOTAL CHROME		TOTAL VOLUME				Remarks
				RM							
890919	9-12-89	FIELD BLANK		✓	✓		592				SAMPLE pH
890920	"	TANK 543 RUN 1A		✓	✓		610.5	✓			ADJUSTED TO
890921	"	TANK 543 RUN 1B		✓	✓		597	✓			BETWEEN 7-8.
		JW RR									PLEASE ADVISE OF
											RESULTS AS SOON
											AS POSSIBLE

Relinquished by:	Date/Time	Received by:	Reason for Exchange:	Comments:
R MAZUREK Phone: (818)440-6014	9-12-89	Of: TMA/Arli		
Relinquished by: Phone:	Date/Time	Received by: Of:	Reason for Exchange:	Comments:
Relinquished by: Phone:	Date/Time	Received by: Of:	Reason for Exchange:	Comments:
Relinquished by: Phone:	Date/Time	Received by: Of:	Reason for Exchange:	Comments:

Source category: Electroplating
Plant name: Douglas Aircraft
Process: Chromic Acid Anodizing

Filename: ELEC_R63.WQ1
Location: Cypress, CA
Test date: August 21- Sept 11, 1989

Date: 12/15/94
Ref. No.: 4-63
Process rate basis: production

Source	Type of control	Pollutant	Run No.	Test Method	Samp. time, min	Isokinetic, %	Gas volume, DSCF	Volum. flow rate, DSCFM	Mass, ug	Concen., gr/DSCF	Emission rate, lb/hr	Process rate, A-hr	Emission factor mg/A-hr	Emission factor gr/A-hr	Rat.
Anodizing tank (370)	none	total Cr			64		46.03	1,369	228.10	7.6E-05	0.00090	33.9	13	0.20	
		total Cr	A		60		51.28	1,170	1130.30	0.00034	0.00341	108.0	14	0.22	
		total Cr	B		60		60.435	1177	1421.1	0.00036	0.00366	112.7	15	0.23	
												Average	14	0.22	B
		Cr+6			64	0.0	46.03	1,369	208.60	7.0E-05	0.00082	33.9	12	0.18	
		Cr+6	A		60	0.0	51.28	1,170	982.50	0.00030	0.00297	108.0	12	0.19	
		Cr+6	B		60	0.0	60.44	1,177	1226.9	0.00031	0.00316	112.7	13	0.20	
												Average	12	0.19	B
		total Cr	A		90		53.341	7609	1654.5	0.00048	0.03122	2,853	7.4	0.11	
		total Cr	B		90		51.222	7588	1659.7	0.00050	0.03252	2,853	7.8	0.12	
												Average	7.6	0.12	C
		Cr+6	A		90	0.0	53.34	7,609	1367.50	0.00040	0.02580	2,853	6.2	0.095	
		Cr+6	B		90	0.0	51.22	7,588	1397.00	0.00042	0.02737	2,853	6.5	0.10	
												Average	6.3	0.10	C
	F	total Cr	A		192		103.04	1,332	5.00	7.5E-07	8.55E-06	166	0.075	0.0012	
		total Cr	B		172		136.58	1,335	24.70	2.8E-06	3.19E-05	188	0.22	0.0034	
												Average	0.15	0.0023	C
		Cr+6	A		192	0.0	103.04	1,332				166			
		Cr+6	B		172	0.0	136.58	1,335				188			
												Average			
	F/PB	total Cr	A		192		128.93	1,340	3.20	3.8E-07	4.4E-06	160	0.040	0.00062	
		total Cr	B		181		118.79	1,340	14.30	1.9E-06	2.1E-05	164	0.18	0.0027	
												Average	0.11	0.0017	C
		Cr+6	A		192	0.0	128.93	1,340				160			
		Cr+6	B		181	0.0	118.79	1,340				164			
												Average			
	F/AMA	total Cr			192		125.07	1,335	2.80	3.5E-07	4.0E-06	268	0.021	0.00033	
		total Cr	A		170							545			
		total Cr	B		170							545			
												Average	0.02	0.0003	NR
		Cr+6			192	0.0	125.07	1,335				268			
		Cr+6	A		170							545			
		Cr+6	B		170							Average			
	PB	total Cr	A		120		113.78	1,168	755.50	1.0E-04	0.00103	262	3.6	0.055	
		total Cr	B		120		119.50	1,160	677.50	8.7E-05	0.00087	262	3.0	0.047	
												Average	3.3	0.051	B
		Cr+6	A		120	0.0	113.78	1,168	726.70			262			
		Cr+6	B		120	0.0	119.50	1,160	763.00			262			
												Average			

Basis for rating: All downrated due to lack of adequate documentation; further downrated if only two runs conducted.
Problems noted:
Other notes: AMA = antimisting agent; F = foam; PB = polypropylene balls
Factors not calculated if mass below quantitation limit.