Note: This is a reference cited in *AP 42, Compilation of Air Pollutant Emission Factors, Volume I Stationary Point and Area Sources.* AP42 is located on the EPA web site at www.epa.gov/ttn/chief/ap42/

The file name refers to the reference number, the AP42 chapter and section. The file name "ref02_c01s02.pdf" would mean the reference is from AP42 chapter 1 section 2. The reference may be from a previous version of the section and no longer cited. The primary source should always be checked.

OPNAV 5216/144 (REV. 6-70)
S/N-0107-LF-778-8097

DEPARTMENT OF THE NAVY

Memorandum

DATE: 13 APR 87

FROM: BILL POWERS

TO: RANDY STRAIT

SUBJ: NNSY PLATING SHOP EMISSION TESTING REPORT NEESA 2-124

RANDY —

I HAVE ENCLOSED A CORRECTED VERSION OF 2-124. THE ONLY CHANGE IS IN THE PARTICLE SIZING GRAPH ON PG. 29.

THE ROUGH PARTICLE SIZING DATA OBTAINED FROM THE MASS EMISSIONS SAMPLING TRAIN IS SHOWN ON PG. 26. 95% OF THE INLET Cr MIST WAS CAUGHT IN THE PROBE OR CYCLONE.

— BILL

RECEIVED APR 1 7 1987

RECEIVED APR 1 6 1987

NEESA 2-124 May 1985

SOURCE EMISSION TESTING OF THE BUILDING 195 PLATING SHOP

at

Norfolk Naval Shipyard
Portsmouth, Virginia
11-18 March 1985

By:

William E. Powers
Seth Foerster

Naval Energy and Environmental Support Activity
Port Hueneme, California 93043-5014

AUTOVON 360-5292/4758, FTS 799-5292/4758, or commercial (805) 982-5292/4758

EXECUTIVE SUMMARY

Emission testing was performed on three exhaust ventilation lines at the Building 195 Plating Shop, Norfolk Naval Shipyard, from 11-18 March 1985. The test results are as follows:

A. Line 65 (hard chrome plating):

1. Emission Testing. The average chromic acid (CrO_3) outlet emission rate was .002 lb/hr, well below the Virginia emission limit of .04 lb/hr. The collection efficiency of the demister was high, averaging 95.7%. A demister is superior to a wet scrubber for controlling chromic acid mist emissions in this application because a demister produces a concentrated, low volume wastewater resulting in reduced wastewater treatment costs.

2. Ventilation. The local exhaust hood system for the single hard chrome plating tank (tank 65) on Line 65 is inadequate. A single lateral exhaust hood on the 4-foot wide tank does not provide sufficient ventilation. Recommend that a second lateral exhaust hood be installed on tank 65. Tank 65 and tank 63 (Line 63) are identical in function and size. Recommend that a second lateral hood also be installed on tank 63.

B. Line E (hydrochloric acid, caustic):

The average hydrochloric acid (HCl) outlet emission rate was 2.5 lb/hr, well above the Virginia emission limit of 0.05 lb/hr. The average caustic (NaOH) outlet emission rate was 0.17 lb/hr, equal to the Virginia emission limit of 0.17 lb/hr. The collection efficiency of the Line E wet scrubber was low, averaging 28% on HCl. The poor collection efficiency is primarily attributable to improper operation of the scrubber spray system.

Broken flowmeters and a lack of sufficient flow monitoring devices make proper operation of the scrubber spray system a matter of chance. Recommend that the following repairs and modifications be made to the Line E scrubber:

1. Repair the two flowmeters.

2. Install a sight glass to monitor sump liquid level.

3. Install two viewports at the spray nozzle level to monitor spray nozzle function.

4. Clearly identify all flow control valves on the scrubber piping network.

The scrubbers on Line E and Line D are identical. Recommend that the above repairs and modifications also be made to the Line D scrubber.

C. Line A (heavy metal plating):

The average cyanide outlet emission rate was .007 lb/hr, below the Virginia emission limit of .02 lb/hr. Air pollution control equipment is not required.

Table of Contents

		Page
	Nomenclature	iv
Section		
I	Introduction	1
II	Technical Background	1
III	Procedure	1
IV	Chain of Custody	22
V	Results	23
VI	Discussion	30
VII	Conclusion	38
VIII	Recommendations	39
	References	40

Appendixes

A	Tank Data	A-1
B	Field Data	B-1
C	Laboratory Results	C-1
D	Impactor Data	D-1
E	Sedimentation Chamber Data	E-1
F	Sample Calculations	F-1
G	Equipment Calibrations	G-1
H	Resumes	H-1

Figures

1	Building 195 Plating Shop Exhaust Ventilation System	2
2	Line 65 Exhaust Ventilation System	3
3	Line E Exhaust Ventilation System	4
4	Line A Exhaust Ventilation System	5
5	Line 65 Sampling Point Locations	11
6	Line E Sampling Point Locations	12
7	Line A Sampling Point Locations	13
8	Method 5 Sampling Train	14
9	Particle Sizing Sampling Train	18
10	Cascade Impactor Cross-Section	19
11	Sedimentation Chamber	21
12	Mass Mean Particle Size Distribution of Chromic Acid Mist, Line 65 Inlet	29
13A	Scanning Electron Microscope (SEM) Photograph of Silver Chloride Produced by HCl Mist	34
13B	Numerical Particle Size Distribution of HCl Mist in SEM Photograph	34
13C	Mass Mean Particle Size Distribution of Hydrochloric Acid Mist in SEM Photograph	35

Table of Contents (Contd.)

Page

Tables

1 Tank Contents and Capacities..... 6
2 Tank Loading Data, Mass Emissions Test--Line 65..... 8
3 Tank Loading Data, Particle Size Test--Line 65..... 8
4 Tank Loading Data, Mass Emissions Test--Line E..... 9
5 Tank Loading Data, Mass Emissions Test--Line A..... 10
6 Test Data, Mass Emissions Test--Line 65..... 23
7 Test Data, Mass Emissions Test--Line E..... 23
8 Test Data, Mass Emissions Test--Line A..... 24
9 Chemical Analysis Results, Mass Emissions Test--Line 65..... 25
10 Size Distribution of Chromic Acid (Total Cr) Mist, Mass Emissions Test--Line 65..... 26
11 Average Size Distribution of Chromic Acid (Total Cr) Mist, Mass Emissions Test (Runs 1-1 through 1-3)--Line 65..... 27
12 Cascade Impactor Results: Run 4-1, Line 65..... 28
13 Cascade Impactor Results: Run 4-2, Line 65..... 28
14 Chemical Analysis Results, Mass Emission Test--Line E..... 31
15 Size Distribution of Hydrochloric Acid (HCl) Mist, Inlet Mass Emissions Test--Line E..... 32
16 Average Size Distribution of Hydrochloric Acid (HCl) Mist, Inlet Mass Emissions Test (Runs 2-2 and 2-3)--Line E..... 33
17 Chemical Analysis Results, Mass Emissions Test--Line A..... 36
18 Comparison Between Virginia APCB Emission Limits and Measured Emission Rates..... 37

NOMENCLATURE

Symbol	Unit	Description
A_s	in^2	Stack cross sectional area
	CF	Cubic feet
	CFM	Cubic feet per minute
	BHP	Brake horsepower
CO_2	%	Measured carbon dioxide content
CO_{2m}	SCFM	Carbon dioxide measured flow rate = $(CO_2)(Qs)/100$
Cp		Pitot tube calibration factor
Dn	inches	Nozzle diameter
Dp	microns	Particle diameter
	DSCF	Dry standard cubic feet
	DSCFM	Dry standard cubic feet per minute.
D_{p50}	microns	Mass mean particle diameter
	fpm	Feet per minute
G	32.1725 ft/sec	Acceleration due to gravity
	g	Gram
	gr	Grain, 1/7000th of a pound
	hp	Horsepower
	hr	Hour
%I	%	Isokinetic
	lb	Pound
	kW	Kilowatt
%M	%	Percent moisture in stack gas by volume
ME	%	Mechanical efficiency
M_d		Mole fraction dry gas

Symbol	Unit	Description
	μ	Micron, 1×10^{-6} meters
	mg	Milligram, 1×10^{-3} grams
M_f	g	Particulate weight collected on probe and filter
M_t	g	Particulate weight—total
M_w	g	Mass of water in particulate train
MW	lb/lb-mole	Molecular weight of stack gas
MW_{air}	28.9641 lb/lb-mole	Molecular weight of air at standard conditions
MW_d	lb/lb-mole	Molecular weight of dry stack gas
MW_{H_2O}	18.0153 lb/lb mole	Molecular weight of water
O_2	%	Measured oxygen content
Pb	"Hg absolute	Barometric pressure
Ps	"Hg absolute	Stack pressure
ΔP	"H_2O	Velocity head of stack gas
P_{std}	29.92125 "Hg	Standard barometric pressure
$\dot{Q}s$	DSCFM	Stack gas dry flow rate
R	21.85 "Hg-ft^3/lb-mole-R°	Universal gas constant
	RPM	Revolutions per minute
	SCF	Standard cubic feet
SP	"H_2O	Static pressure
t_{amb}	°F	Ambient temperature
t_m	°F	Control box meter temperature
T_t	min	Net time of test
t_s	°F	Stack gas temperature
T_{std}	528°R	Standard temperature

Symbol	Unit	Description
V_m	ft^3	Volume of dry gas sampled @ meter conditions
$V_{m\ std}$	DSCF	Volume of dry gas sampled @ standard conditions
V_s	fpm	Stack velocity @ stack conditions
V_w	ml	Total water collected in impingers and desiccant
$V_{w\ gas}$	ft^3	Volume of water vapor collected @ standard conditions
$\Delta H@$	$"H_2O$	Orifice pressure drop across meter
ρ_{air}	0.075224 lbs/ft^3	Density of air at standard conditions
ρ_{H_2O}	62.31639 lbs/ft^3	Density of water at standard conditions
ρ_{H_2O}	0.99824 g/ml	Density of water at standard conditions

Standard conditions are 68°F, 29.92126 "Hg

Symbol	Description
Ag^{+}	Silver ion
AgCN	Silver Cyanide
Al^{+++}	Aluminum ion
Cd^{++}	Cadmium ion
Cl^{-}	Chloride ion
CN^{-}	Cyanide ion
Cr^{+3}	Trivalent Chromium ion
Cr^{+6}	Hexavalent Chromium ion
Cr_{tot}	Total Chromium ion
CrO_3	Chromic Acid
Cu^{++}	Copper ion
CuCN	Copper Cyanide
HCL	Hydrochloric Acid/Muriatic Acid
HNO_3	Nitric Acid
K^{+}	Potassium ion
KCN	Potassium Cyanide
KOH	Potassium Hydroxide
Na^{+}	Sodium ion
NaCN	Sodium Cyanide
NaOH	Sodium Hydroxide
NO_3^{-}	Nitrate ion
$SO_4^{=}$	Sulfate ion
Zn^{++}	Zinc ion

I. INTRODUCTION

In response to a request[1] from the Atlantic Division, Naval Facilities Engineering Command (LANTNAVFACENGCOM), Norfolk, Virginia, the Naval Energy and Environmental Support Activity (NEESA) source emission test (SET) team tested emissions at the Plating Shop, Building 195, Norfolk Naval Shipyard (NAVSHIPYD), from 11-18 March 1985. Emission testing was performed on Line 65 (hard chrome plating), Line E (hydrochloric acid, caustic), and Line A (heavy metal plating).

The collection efficiencies of the pollution control devices on Line 65 and on Line E were measured by performing emission testing simultaneously at the inlet and outlet of each device. Chromic acid mist particle size distribution measurements were made at the Line 65 inlet test site using a cascade impactor. A sedimentation chamber was used at the Line E inlet test site to measure the particle size distribution of the hydrochloric acid (HCl) mist.

II. TECHNICAL BACKGROUND

A retrofit of the Building 195 Plating Shop was commissioned in 1981 by the Norfolk Naval Shipyard to modernize the facility. The retrofit is nearing completion, and portions of the Plating Shop have been operational since late 1983. Emission testing of a hard chrome plating exhaust line was required by the Virginia Air Pollution Control Board (APCB)[2] following completion of the retrofit. Emission tests were performed on Line 65, hard chrome plating, to fulfill the Virginia APCD requirement. An emission test was performed on the hydrochloric acid exhaust line (Line E) to determine whether the wet scrubber on Line E meets the collection efficiency required in the construction specification. An emission test was performed on the heavy metal plating exhaust line (Line A) to confirm that emissions from heavy metal plating processes do not warrant air pollution controls.

Emission data gathered on various plating shop processes by NEESA will be used to specify appropriate emission controls for those processes in the Plating Shop design manual being prepared by the Naval Facilities Engineering Command (NAVFACENGCOM).

The exhaust ventilation system for the Building 195 Plating Shop is shown in Figure 1. The exhaust ventilation subsystems for Line 65, Line E and Line A are shown separately in figures 2 through 4. Tank contents and capacities for Line 65, Line E, and Line A are listed in Table 1.

III. PROCEDURE

Three types of tests were performed; mass emissions, particle size distribution by impaction, and particle size distribution using a sedimentation chamber. Tests were performed as follows;

A. Line 65 (hard chrome plating):

1. Three 90-minute mass emission runs. Mass emission runs performed simultaneously at the inlet and outlet of the demister.

FIGURE 1. **BLDG 195 PLATING SHOP EXHAUST VENTILATION SYSTEM**

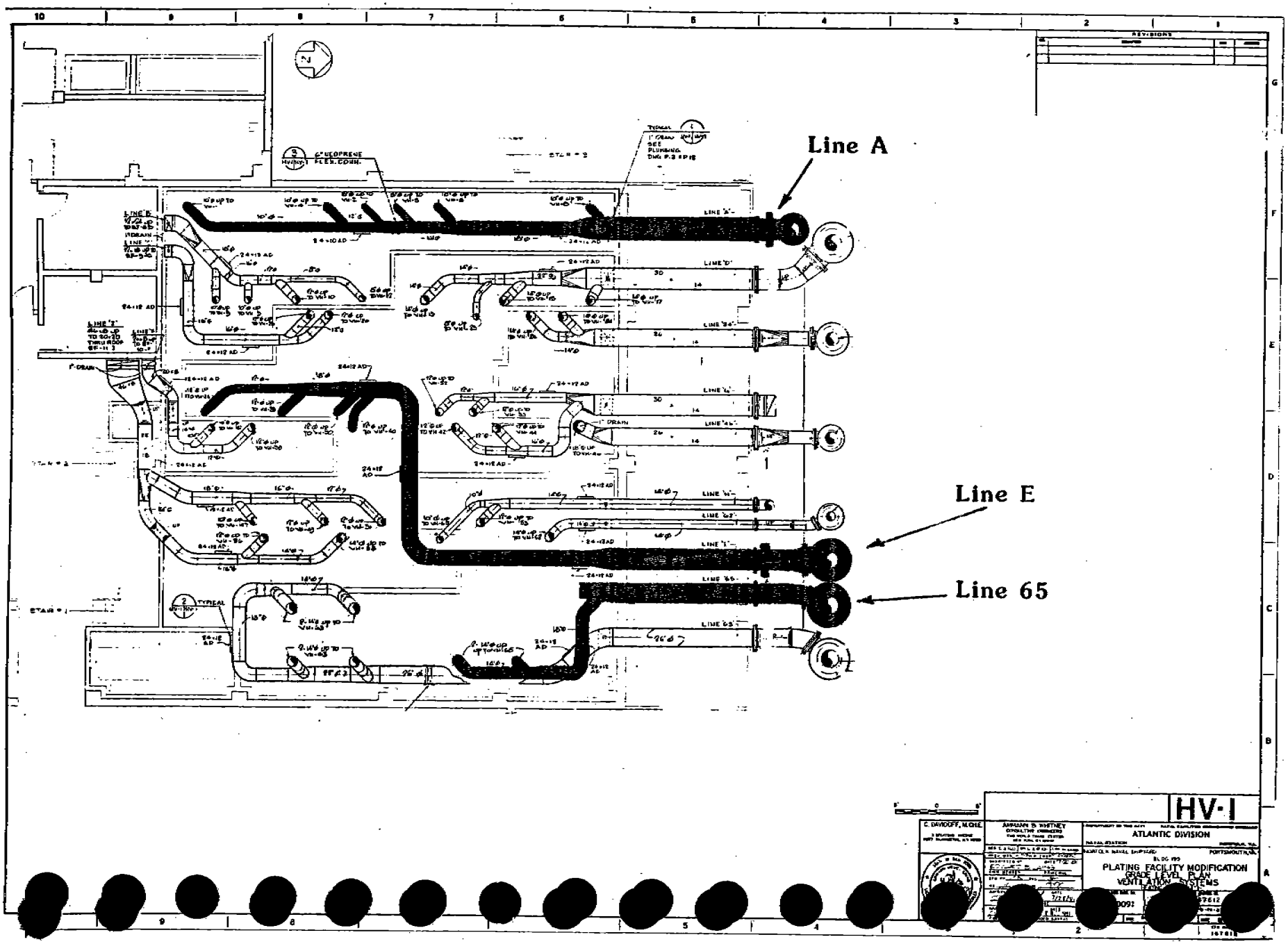

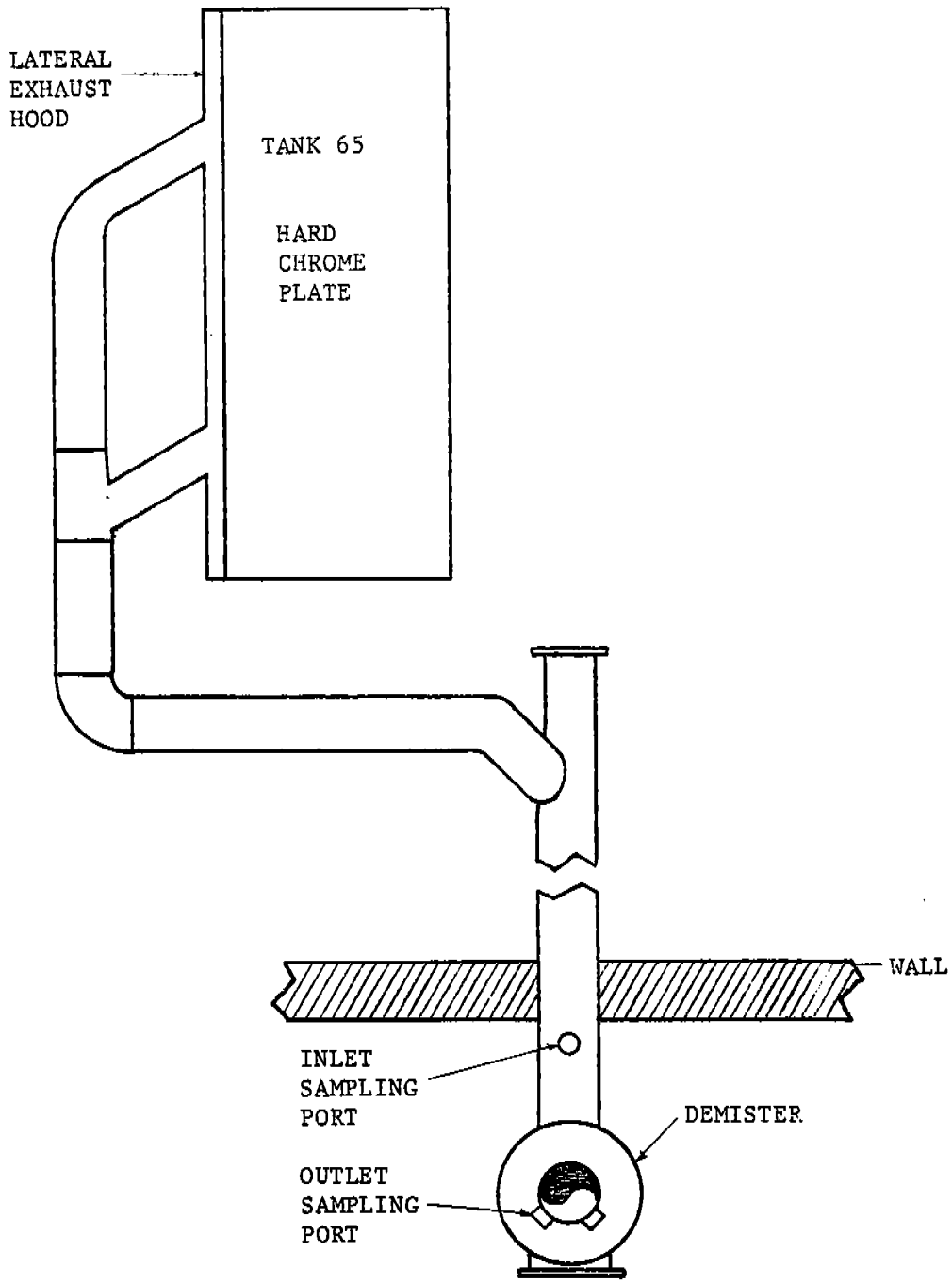

FIGURE 2. LINE 65 EXHAUST VENTILATION SYSTEM

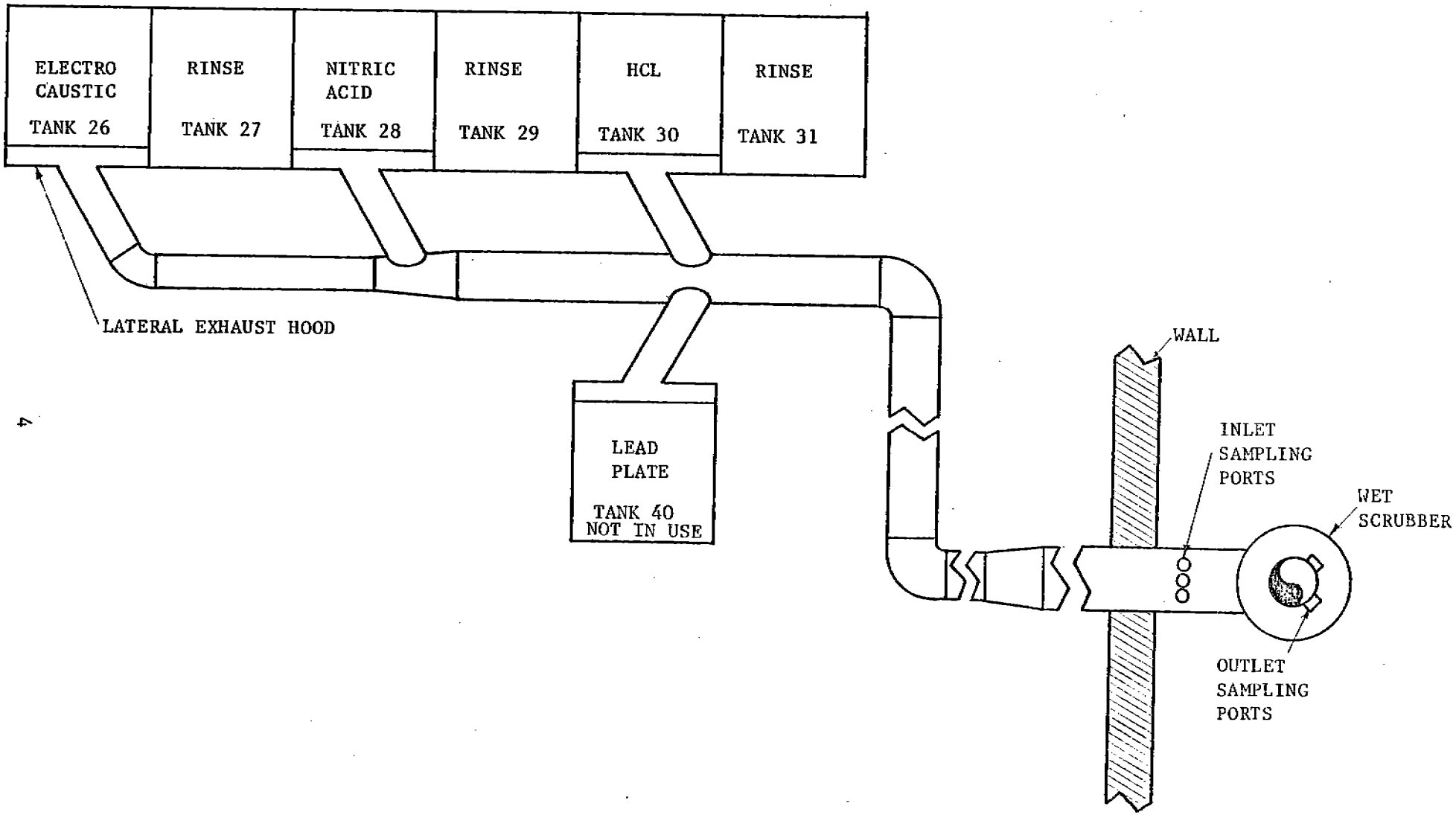

FIGURE 3. LINE E EXHAUST VENTILATION SYSTEM

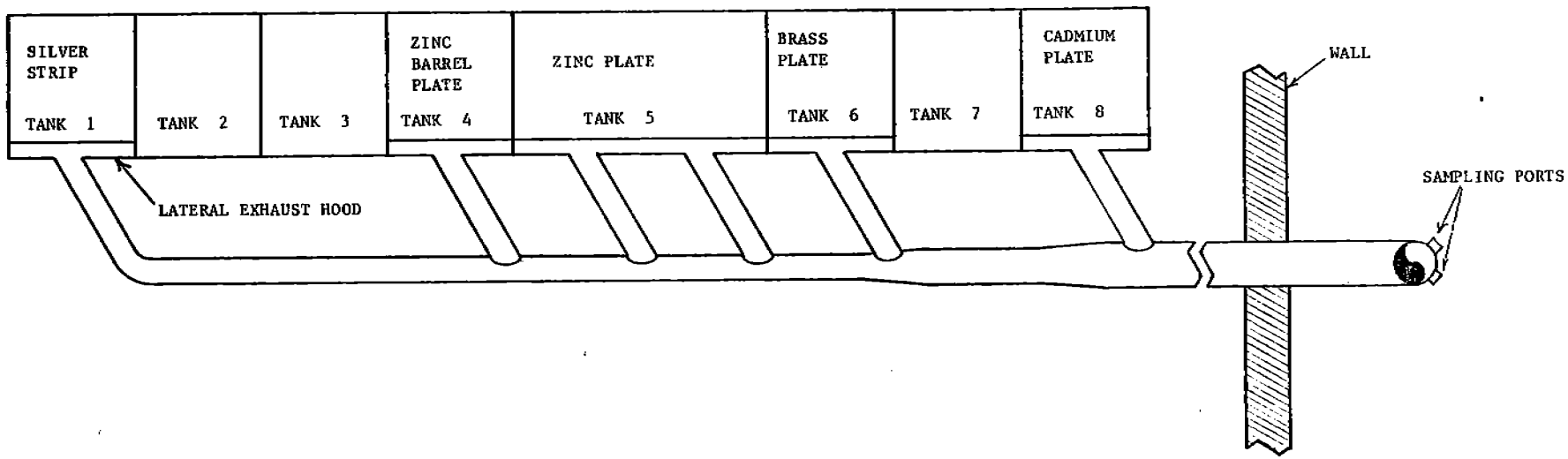

FIGURE 4. LINE A EXHAUST VENTILATION SYSTEM

TABLE 1
TANK CONTENTS AND CAPACITIES

Line No.	Tank No.	Dimensions LxWxD (ft)	Capacity (Gallons)	Temp (°F)	Contents
65	65	15 x 4 x 6	1900	140	CrO_3 (28.1) + SO_4 (0.31)
E	30	3 x 3 x 5	300	Room	7.1% NaOH
E	28	3 x 3 x 5	During test: 2 (normally empty)	Room	60.0% HNO_3
E	26	4 x 3 x 5	During test: 50 (normally empty)	Room	34.0% HCl
A	8	5 x 3 x 5	500	Room	Cd^{++}(0.26) + CdO_3 (0.29) + NaCN (10.6) + NaOH (1.50)
A	6	3 x 3 x 5	300	Room	Cu^{++} (0.32) + Zn^{++} (0.19) + KCN (1.57)
A	5	8 x 3 x 5	800	Room	Zn^{++} (0.41) + NaCN (10.1) + NaOH (4.80)
A	1	3 x 3 x 5	300	Room	---

2. Two 4-hour cascade impactor runs. Impactor runs performed at the demister inlet.

B. Line E (hydrochloric acid):

1. Three, 90-minute mass emission runs. Mass emission runs performed simultaneously at the inlet and outlet of the wet scrubber.

2. Four, 5-minute sedimentation chamber runs performed at the inlet test site.

C. Line A (heavy metal plating):

1. Three 90-minute mass emissions runs. A single test site was used, as there is no air pollution control on this line.

During testing, each tank was loaded with workpieces to simulate tank loads at or above the maximum load encountered during normal shop operation. Tank loads and electrical readings were monitored during each test, and are included in tables 2 through 5.

A. Mass Emissions Test.

1. Sampling procedures and equipment coincided with the following U.S. Environmental Protection Agency (EPA) test methods described in the Federal Register, Volume 42, No. 160, Part II of 18 August 1977[3], except as noted in the following paragraphs.

a. Method 1--Sample and Velocity Traverse

b. Method 2--Determination of Stack Gas Velocity and Volumetric Flow Rate

c. Method 5--Determination of Particulate Emissions From Stationary Sources

d. Method 8 (modified)--Determination of Sulfuric Acid Mist Emissions from Stationary Sources

2. Location of sampling sites and number of sampling points (figures 5 through 7) were determined from Method 1 of the Federal Register cited above.

3. The sampling train is shown in Figure 8. Type "S" pitot tubes were used. Teflon-coated, button-hook nozzles and quartz-glass probe-liners were used to prevent any chemical reactions between the exhaust gas and internal sampling train surfaces. Sampling at the Line 65 demister inlet and at the Line E scrubber inlet was performed with the probe mounted vertically and connected to the sampling train glassware by 25 feet of 0.5 in. diameter teflon tubing. Sampling at the Line 65 demister outlet, Line E scrubber outlet, and the Line A outlet was performed with the probe mounted horizontally and connected directly to the sampling train glassware. A glass cyclone (cut diameter $\geq$ 5 um) preceded the filter in the sampling train. The

TABLE 2
TANK LOADING DATA
MASS EMISSIONS TEST--LINE 65

Test-Run	Volts (V)	Amps (A)	Workpiece Area (Ft^2)
1-1	6.6	2810	33
1-2	6.7	2450	30
1-3	6.5	2190	30
AVE.	6.6	2480	31

TABLE 3
TANK LOADING DATA
PARTICLE SIZE TEST--LINE 65

Test-Run	Volts (V)	Amps (A)	Workpiece Area (Ft^2)
4-1	6.8	1290	20
4-2	7.1	2000	17
AVE.	7.0	1650	18.5

TABLE 4
TANK LOADING DATA
MASS EMISSIONS TEST--LINE E

Test-Run	Workpiece Area (Ft^2)		
	Tank 26 (HCl)	Tank 28 (HNO_3)	Tank 30 (NaOH)
2-2	2	2	3
2-3	2	2	3
2-4	3	2	3
AVE.	2.3	2	3

NOTES:

1. Fresh pieces of aluminum added at 15-20 minute intervals.

2. Tank 26 and Tank 28 are non-electrical.

3. Tank 30 is electrical, but the electrical system was not operational during testing.

TABLE 5
TANK LOADING DATA
MASS EMISSIONS TEST--LINE A

Test-Run	Tank 1 Silver Strip			Tank 5 Zinc Plate			Tank 6 Brass Plate			Tank 8 Cadmium Plate		
	V	A	Workpiece Area (Ft^2)	V	A	Workpiece Area (Ft^2)	V	A	Workpiece Area (Ft^2)	V	A	Workpiece Area (Ft^2)
3-1	9.1	200	3.5	8.8	500	12	7.9	50	4.5	8.8	240	7
3-2	10.0	210	3.5	9.9	580	12	8.7	60	4.5	10.0	300	7
3-3	10.1	230	3.5	10.0	620	12	8.8	65	4.5	9.5	300	7
AVE.	9.7	210	3.5	9.6	570	12	8.5	60	4.5	9.4	280	7

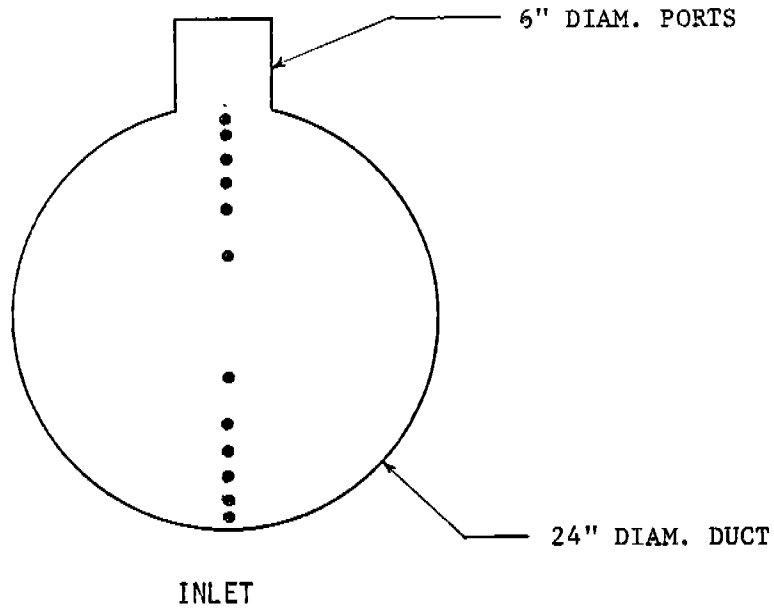

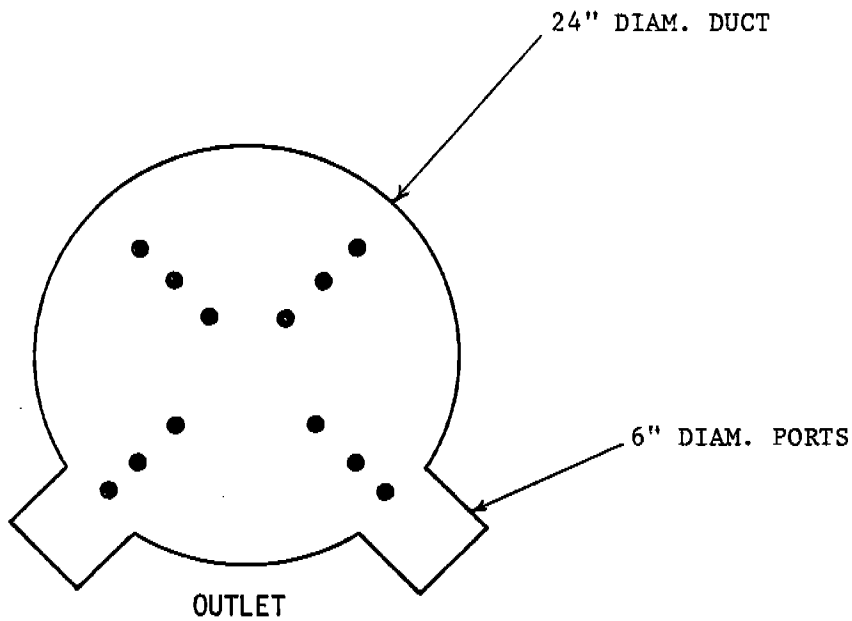

FIGURE 5. LINE 65 SAMPLING POINT LOCATIONS

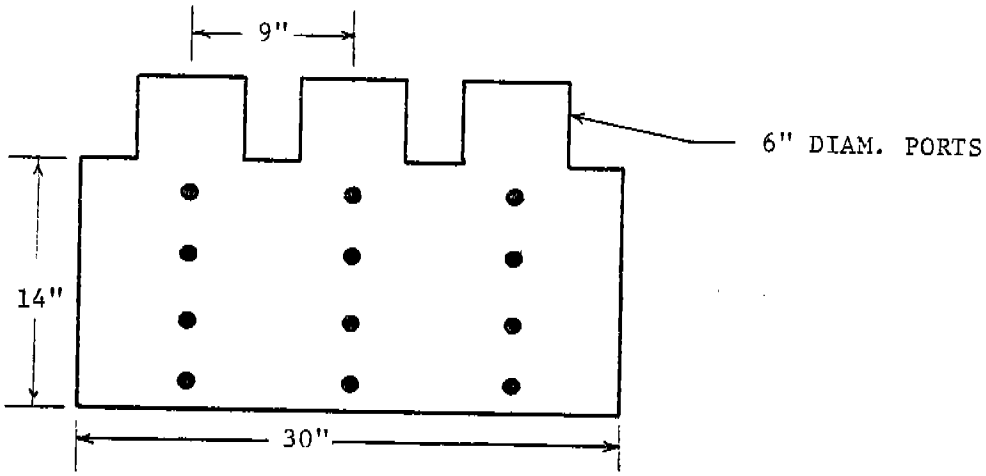

INLET

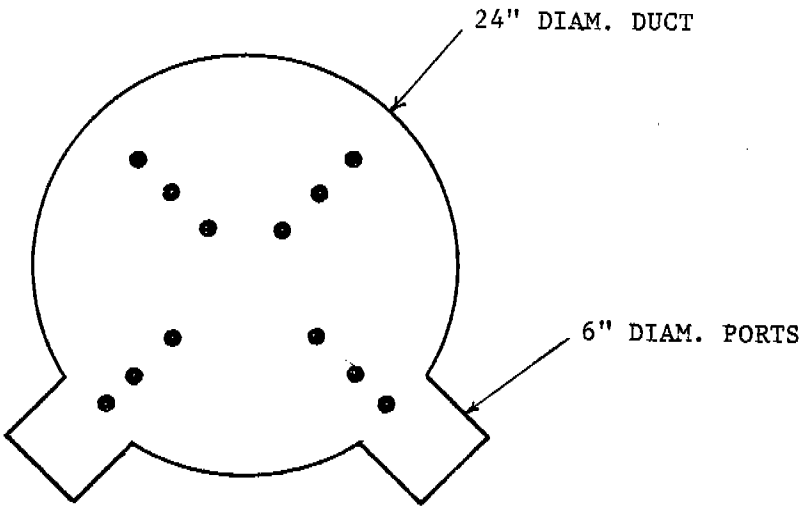

OUTLET

FIGURE 6. LINE E SAMPLING POINT LOCATIONS

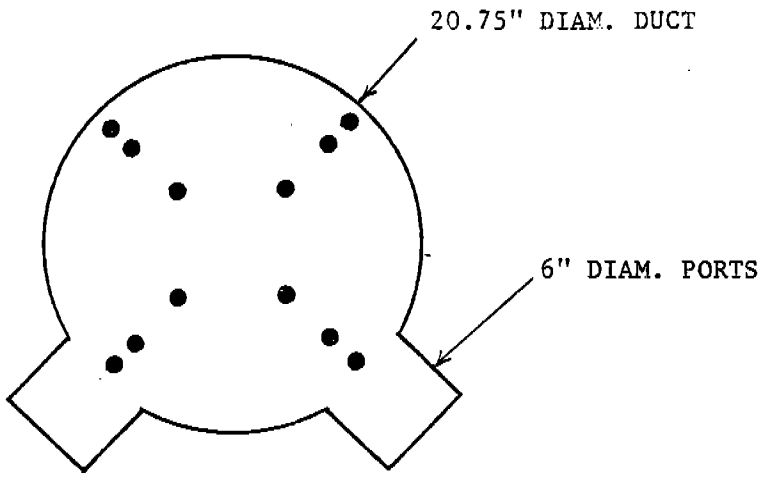

FIGURE 7. LINE A SAMPLING POINT LOCATIONS

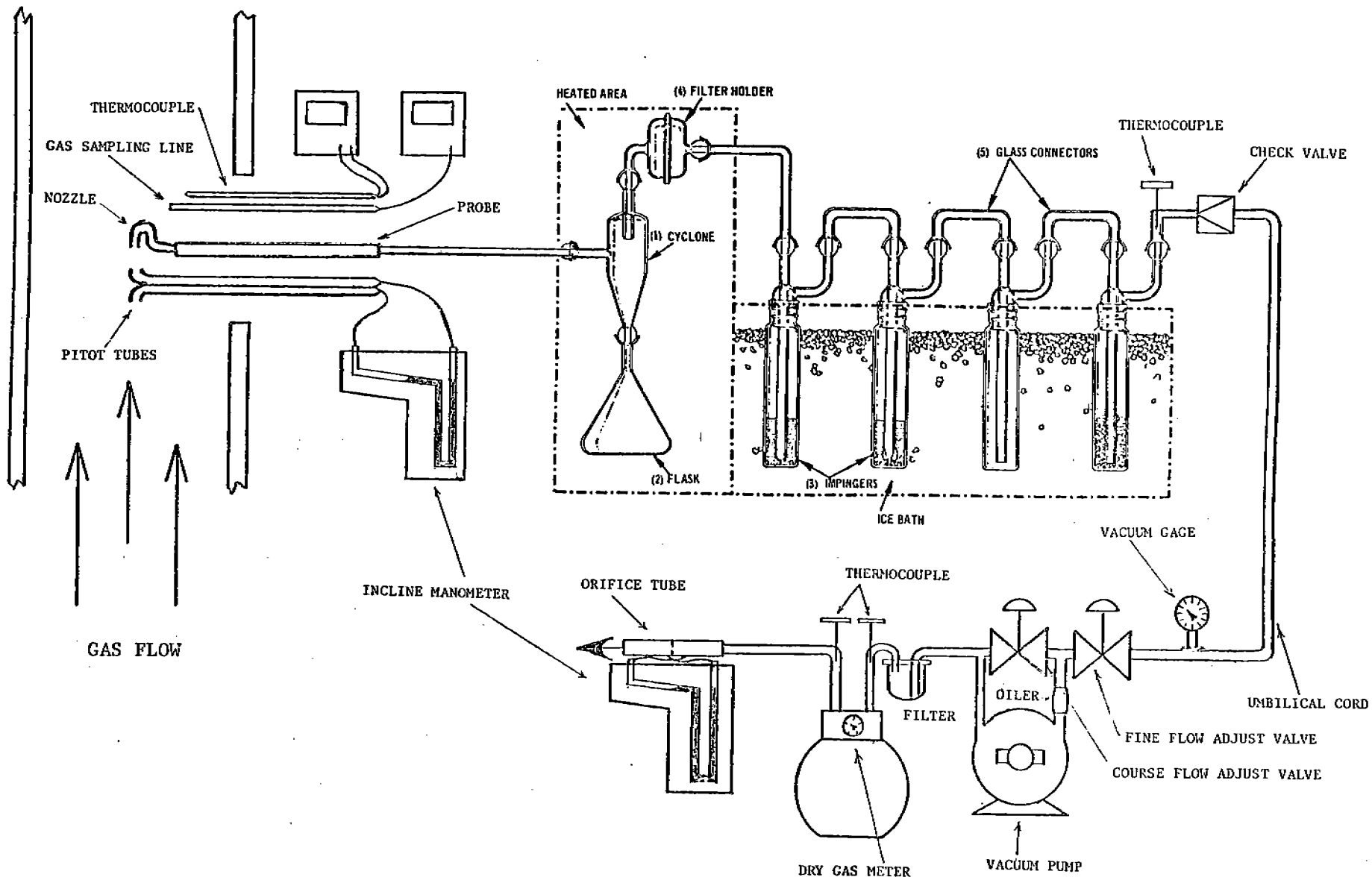

FIGURE 8. **MTD 5 SAMPLING TRAIN**

back half of each filter holder (2-inch diameter x 1-inch depth) was packed with 8 um diameter glass wool fibers to a density of 0.125 grams/cm^3 (approximately six grams of glass wool per filter holder).

4. Three separate 90-minute sampling runs were performed at each sampling site. Leak checks were performed both before and after each sampling run at the pitot tubes, at the beginning of the impingers and at the sampling nozzle as detailed in Method 5, Section 4.1.4.1, Federal Register.

5. Impingers were initially weighed, tared, then weighed with the following: 200 ml 0.1 N KOH (1st impinger, modified Greenburg-Smith design), 200 ml deionized water (2nd impinger, Greenburg-Smith design with standard tip), dry (3rd impinger, modified Greenburg-Smith design), and 200 ml silica gel (4th impinger, modified Greenburg-Smith design). Impingers were reweighed following each run to determine water gain. This method is both simpler and more accurate than the specified transfer/weigh procedure (Method V, Section 2.2.6 and Section 4.2), as the samples are handled less and temperature error is eliminated. A Mettler PB 3000 electronic balance, calibrated using International Organization of Legal Metrology (IOLM) specification metric weights, was used for all field impinger weighings.

6. O_2 and CO_2 concentrations were not measured. The O_2 concentration was assumed to be 20.9% and the CO_2 concentration was assumed to be 0.0%.

7. Following each run, samples were collected into three separate borosilicate glass recovery bottles or polyethylene "cubitainers." The sampling nozzle, probe liner, teflon tubing (inlet sampling train only) and cyclone were rinsed with deionized water into the first container. The glass wool was placed into the second container and the filter holder was rinsed with deionized water into the same container. The first three impingers and connecting glassware were rinsed with deionized water into the third container.

Total sample weight was determined for each container at the test site. Samples were delivered to Bionetics Laboratory, Hampton, Virginia, for chemical analysis. Additional samples were delivered to the NORNAVSHIPYD laboratory for chemical analysis. Both laboratory reports appear in Appendix D.

8. Percent isokinetic was calculated for each run. An isokinetic value between 90% and 110% was required for the run to be considered valid.

9. The following constants were used to reflect the change by EPA from 70°F to 68°F for standard temperature in the above Federal Register:

Symbol	Unit	Description
g/lb	453.59237	Conversion factor
K_p	85.39 $\frac{\text{ft (lb/lb-mole)(in.Hg) 1/2}}{\text{sec (°R)(in. H}^2\text{O)}}$	Pitot tube constant (Method 2)
K_1	17.65 °R/in. Hg	Standardizes temperature and pressure (Method 5)
K_2	0.04710 ft^3/ml	Conversion factor (Method 5)
K_4	0.09444 $\frac{\text{(min) (in. Hg)}}{\text{(°R)(sec)}}$	Constant for standard pressure and temperature (Method 5)
MW_{air}	28.9641 lb/lb-mole	Molecular weight of air
MW H_2O	18.01534 lb/lb-mole	Molecular weight of water
P_{std}	29.92126 "Hg	Absolute standard pressure
Pair	0.0752236 lb/ft^3	Density of air at 20°C
pH_2O	0.99824 g/ml	Density of water at 20°C

B. Particle Size Distribution Using Cascade Impactor--Line 65.

1. Sampling procedures and equipment used were similar to those used during the mass emissions test and followed EPA Methods 1, 2, and 5, given in Federal Register Vol 42, No. 160, Part II of 18 August 1977. The following guidelines were also used:

a. ASME Performance Test Code (PTC) 28--Determining Properties of Fine Particulate Matter (draft revision).[4]

b. Operations Manual--University of Washington Mark III Cascade Impactor.[5]

2. Location of the sampling site (Figure 5) was determined from Method I of the Federal Register cited above.

3. The sampling train is shown in Figure 9. The differences between a mass emissions sampling train and a particle size distribution sampling train are as follows:

a. University of Washington Mark III Cascade Impactor.

b. Stainless-steel probe liners replaced quartz glass probe liners. The torque imposed on the tip of the glass probe liner by the weight of the impactor causes the glass liner to break. Using stainless-steel probe liners eliminates this problem.

c. Teflon tubing connected the probe directly to the first impinger. The borosilicate cyclone and the filter holder were not used.

4. The University of Washington Mark III Cascade Impactor was assembled as shown in Figure 10. Teflon O-ring gaskets were used on both sides of the backup filter to prevent the filter from sticking to the filter support screen. The Mark III Cascade Impactor was modified to contain only five stages.

5. Filters from each impactor stage were stored in petri dishes following each impactor run. Filters were then chemically analyzed by Bionetics Laboratory to determine the concentration of chromic acid per filter.

6. Reeve Angel 934AH fiberglass filters were used in the impactor during the 4-hour sampling runs. Filters were pre-washed in sulfuric acid solution as follows:

a. Filters were submerged in a 50-50 mixture (by volume) of distilled water and reagent grade concentrated sulfuric acid at 230-239°F for two hours.

b. Filters were removed from the acid bath, cooled to room temperature, then thoroughly rinsed with distilled water until the pH of the rinsewater was nearly the same as that of the distilled water.

c. Filters were drained, spread out to dry in a clean, dry place, then baked at 120°F for two hours, at 390°F for two additional hours, and finally at 700°F for three more hours.

7. Prior to sampling, a velocity traverse was performed as outlined in Method 2, Federal Register, cited above. Velocity traverses were performed without the impactor attached.

8. An average duct velocity was determined from the initial velocity traverse, and one velocity point at or near the average velocity was chosen as the sampling point. One sampling point was used to minimize impactor jostling.

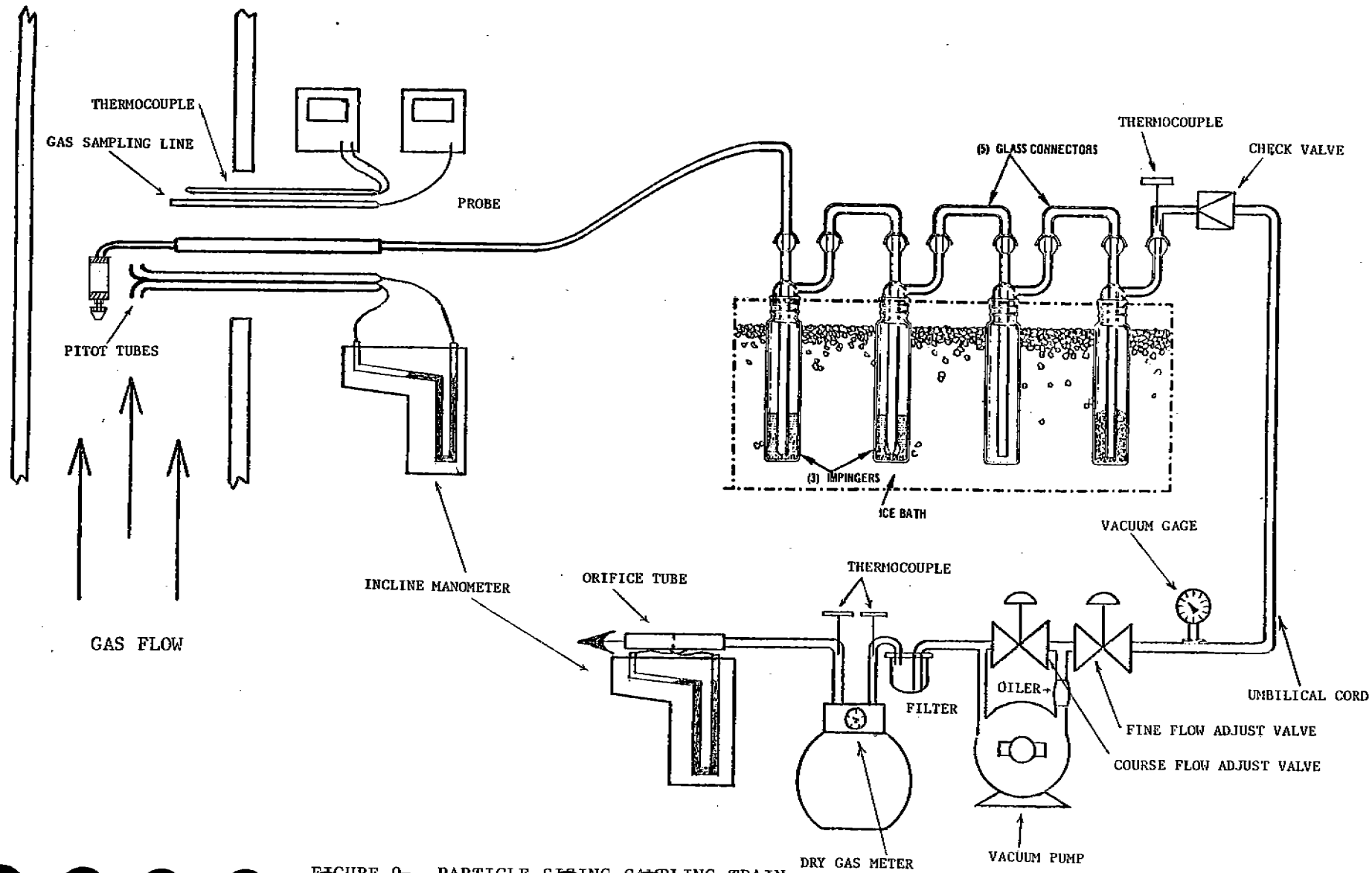

FIGURE 9. PARTICLE SIZING SAMPLING TRAIN

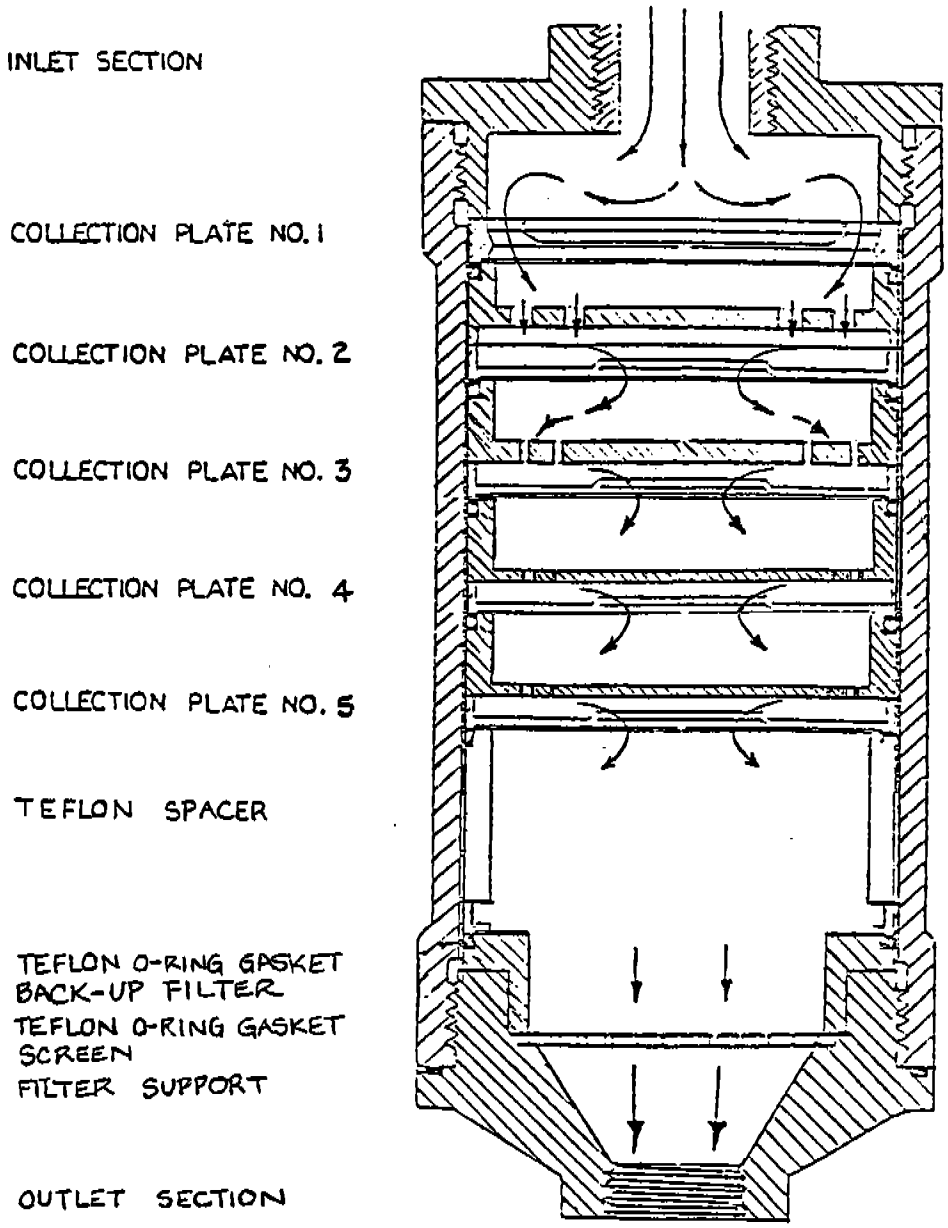

FIGURE 10. CASCADE IMPACTOR CROSS-SECTION

9. Pitot tubes were leak checked before and after each run as detailed in Method 5, Section 4.1.4.1, Federal Register. A leak check was performed at the impactor nozzle prior to the beginning of a sampling run. No leak check was performed at the impactor nozzle following a sampling run to prevent any disturbance to particulate collected on the impactor stages.

10. Impingers were initially weighed, tared, then weighed with the following; 100 ml deionized water (1st impinger, modified Greenburg-Smith design and 2nd impinger, Greenburg-Smith design with standard tip), dry (3rd impinger, modified Greenburg-Smith design), and 200 ml silica gel (4th impinger, modified Greenburg-Smith design). Impingers were reweighed following each run to determine water gain. The impinger water was disposed of following the weighing.

11. Percent isokinetic was calculated for each sampling run. An isokinetic value between 80% and 120% was necessary for the run to be considered valid.

C. Particle Size Distribution Using A Sedimentation Chamber--Line E.

1. Sampling procedures and equipment used were similar to those used during the mass emissions test and followed EPA methods 1, 2, and 5, given in Federal Register, Vol. 42, No. 160, Part II of 18 August 1977.

2. Sedimentation chamber gas samples were taken from a single point at the Line E inlet test location.

3. The differences between a mass emissions sampling train and a sedimentation chamber sampling train are as follows:

a. Teflon tubing connected the probe directly to the first impinger. The borosilicate cyclone, beaker, and the filter holder were not used.

b. A sedimentation chamber was exchanged for the first impinger.

4. The sedimentation chamber consisted of an aluminum cylinder capped with silver foil mounted onto a 1/4-inch thick plexiglass platform inside an impinger as shown in Figure 11. Particulate was collected on the silver foil.

5. Prior to sampling, a velocity traverse was performed as outlined in Method 2, Federal Register, cited above. The velocity traverse was performed without the sedimentation chamber attached.

6. An average duct velocity was determined from the initial velocity traverse and one velocity point at or near the average velocity was chosen as the sampling point.

7. Four separate 5-minute sampling runs were performed. Pitot tubes were leak checked before and after the series of sampling runs as detailed in Method 5, Section 4.1.4.1, Federal Register, cited above. Prior to the first sampling run, a leak check was performed at the nozzle

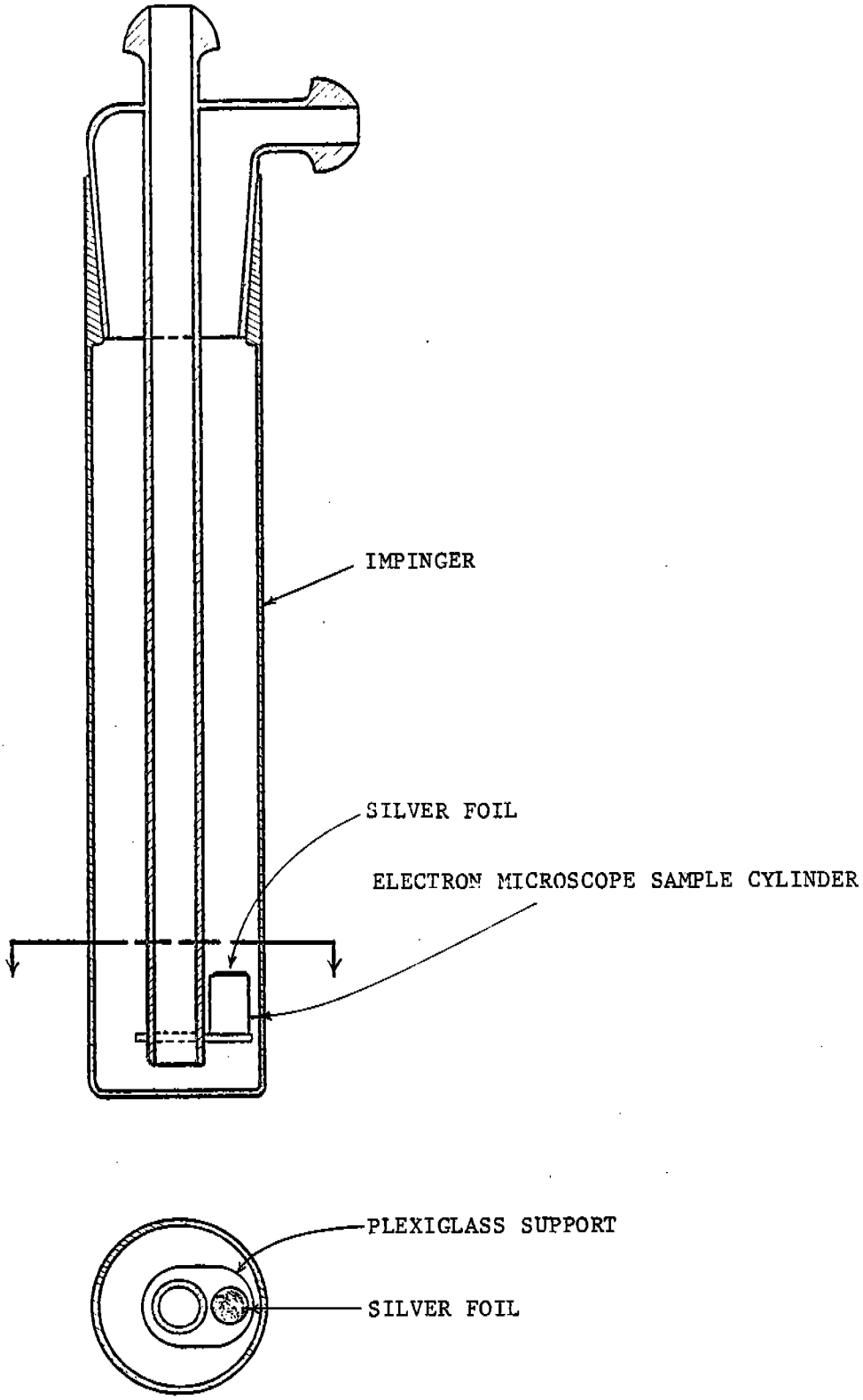

SEDIMENTATION CHAMBER

FIGURE 11. SEDIMENTATION CHAMBER

(sedimentation chamber was bypassed). No leak checks were performed with the sedimentation chamber attached to the sampling train, to prevent contamination of the silver foil.

8. Moisture content was assumed to be the same as the moisture content determined during mass emissions testing, therefore, impingers were not tared nor weighed. The two impingers following the sedimentation chamber were empty and the fourth impinger contained approximately 200 ml silica gel. All impingers were modified Greenburg-Smith design.

9. Following a sampling run, the inlet and outlet of the sedimentation chamber were sealed with parafilm to prevent contamination of the silver foil. Suspended aerosols in the gas sample were allowed to settle out for approximately 48 hours prior to removing the aluminum cylinder. Particles collected on the silver foil were observed using a scanning electron microscope.

IV. CHAIN OF CUSTODY

A. Source Emission Test.

	Inlet	Outlet
Stack	Joe Senteno	Bob Saunders
Control Box	Seth Foerster	Susan Suzuki
Sample Train Set-Up and Recovery	Charles Yee	
Tank Data	Bill Powers	
Sample Recovery and Analysis	Charles Yee Bill Powers Susan Suzuki	

B. Sample Transport.

Samples were stored in an ice chest for up to three days. Each mass emissions sample, KOH blank, deionized water blank, and tank solution sample was sealed in a glass borosilicate container or polyethylene "cubitainer." Samples were then transported by car to Bionetics Laboratory, Hampton, Virginia, and to the Norfolk NAVSHIPYD chemical laboratory. No damage was caused during transport.

V. RESULTS

Table 1 describes the tank capacities and tank solutions of tanks connected to Line 65, Line E, and Line A. Tables 2 through 5 summarize tank loading levels maintained during emission tests. Tables 6 through 8 summarize exhaust flowrates and isokinetic values obtained during emission testing. Tables 9 through 13 detail the results of mass emissions testing and impactor testing on Line 65. Figure 12 shows the particle size distribution of chromic

TABLE 6
TEST DATA
MASS EMISSIONS TEST--LINE 65

Run No.	Sample Volume Vs (DSCF)	Flowrate, Q (ACFM)	Flowrate, Q (SCFM)	Isokinetic (%)
1-1 In	61.656	8650	8325	99.5
1-1 Out	61.126	9156	8819	98.7
1-2 In	70.926	8403	8122	93.1
1-2 Out	78.902	9498	9254	95.5
1-3 In	72.853	8559	8230	95.9
1-3 Out	79.769	8924	8922	99.3

TABLE 7
TEST DATA
MASS EMISSIONS TEST--LINE E

Run No.	Sample Volume Vs (DSCF)	Flowrate, Q (ACFM)	Flowrate, Q (SCFM)	Isokinetic (%)
2-2 In	68.501	9093	8862	97.2
2-2 Out	69.321	9711	9880	97.4
2-3 In	62.355	9280	9030	93.5
2-3 Out	69.755	10115	9924	97.6
2-4 In	65.068	8555	8313	98.4
2-4 Out	67.253	9663	9546	97.0

TABLE 8
TEST DATA
MASS EMISSIONS TEST--LINE A

Run No.	Sample Volume Vs (DSCF)	Flowrate, Q (ACFM)	Flowrate, Q (SCFM)	Isokinetic (%)
3-1	72.650	7576	7665	98.6
3-2	72.469	7646	7681	98.7
3-3	69.974	7503	7390	98.7

TABLE 9
CHEMICAL ANALYSIS RESULTS
MASS EMISSIONS TEST--LINE 65

Run No.	Specie	Total Pollutant Wt. Collected (mg)	Sample Volume (m^3)	Pollutant Concentration (mg/m^3)	Pollutant Concentration (lb/hr)	Demister Efficiency
1-1 In	Total Cr	0.698	1.746	0.400	0.013	92.3%
1-1 Out	Total Cr	0.053	1.731	0.031	0.001	
1-2 In	Total Cr	1.293	2.008	0.644	0.020	95.7%
1-2 Out	Total Cr	0.062	2.234	0.028	0.001	
1-3 In	Total Cr	1.614	2.063	0.782	0.024	97.7%
1-3 Out	Total Cr	0.040	2.259	0.018	0.001	

Ave. Inlet Conc: Tot. Cr = 0.019 lb/hr
Ave. Outlet Conc: Tot. Cr = 0.001 lb/hr

NOTE: Total Cr = Cr^{+3} + Cr^{+6}.

TABLE 10
SIZE DISTRIBUTION OF CHROMIC ACID (TOTAL Cr) MIST
MASS EMISSIONS TEST--LINE 65

Run No.	Sample Location	Pollutant Weight (mg)	Percentage of Total Catch	Particle Diameter (um)
1-1 In	Probe Wash	0.641	92%	$x \geq 5$ um
	Filter	0.040	6%	5 um $> x \geq 0.1$ um
	Impingers	0.017	2%	0.1 um $> x$
1-1 Out	Probe Wash	0.014	26%	$x \geq 5$ um
	Filter	0.023	44%	5 um $> x \geq 0.1$ um
	Impingers	0.016	30%	0.1 um $> x$
1-2 In	Probe Wash	1.224	95%	$x \geq 5$ um
	Filter	0.054	4%	$5 > x \geq 0.1$ um
	Impingers	0.015	1%	0.1 um $> x$
1-2 Out	Probe Wash	0.019	31%	$x \geq 5$ um
	Filter	0.028	45%	5 um $> x \geq 0.1$ um
	Impingers	0.015	24%	0.1 um $> x$
1-3 In	Probe Wash	1.574	97%	$x \geq 5$ um
	Filter	0.030	2%	5 um $> x \geq 0.1$ um
	Impingers	0.010	1%	0.1 um $> x$
1-3 Out	Probe Wash	0.009	22%	$x \geq 5$ um
	Filter	0.021	53%	5 um $> x \geq 0.1$ um
	Impingers	0.010	25%	0.1 um $> x$

TABLE 11
AVERAGE SIZE DISTRIBUTION OF CHROMIC ACID (TOTAL Cr) MIST
MASS EMISSIONS TEST (RUNS 1-1 THROUGH 1-3)--LINE 65

Sample Location	Total Pollutant Weight (mg)	Percentage of Total Catch	Particle Diameter (um)
Inlet, Probe Wash	3.439	95%	$x \geq 5$ um
Inlet, Filter	0.124	4%	5 um $> x \geq 0.1$ um
Inlet, Impingers	0.042	1%	0.1 um $> x$
Outlet, Probe Wash	0.042	27%	$x \geq 5$ um
Outlet, Filter	0.072	46%	5 um $> x \geq 0.1$ um
Outlet, Impingers	0.041	27%	0.1 um $> x$

TABLE 12
CASCADE IMPACTOR RESULTS: RUN 4-1
LINE 65

Stage	Cut Diameter (um)	Total Cr Weight (gm)	Percentage of Total
1	18.0	0.120	31.5%
2	12.0	0.038	10.0%
3	4.4	0.160	42.0%
4	2.2	0.041	10.8%
5	1.4	0.012	3.2%
Back-Up Filter 6	0.1	0.010	2.6%

TABLE 13
CASCADE IMPACTOR RESULTS: RUN 4-2
LINE 65

Stage	Cut Diameter (um)	Total Cr Weight (gm)	Percentage of Total
1	18.0	0.550	52.7%
2	12.0	0.140	13.4%
3	4.4	0.250	24.0%
4	2.2	0.070	6.7%
5	1.4	0.018	1.7%
Back-Up Filter 6	0.1	0.015	1.4%

NOTE: Sample flowrate was 0.6 ACFM during Run 4-1 and Run 4-2.

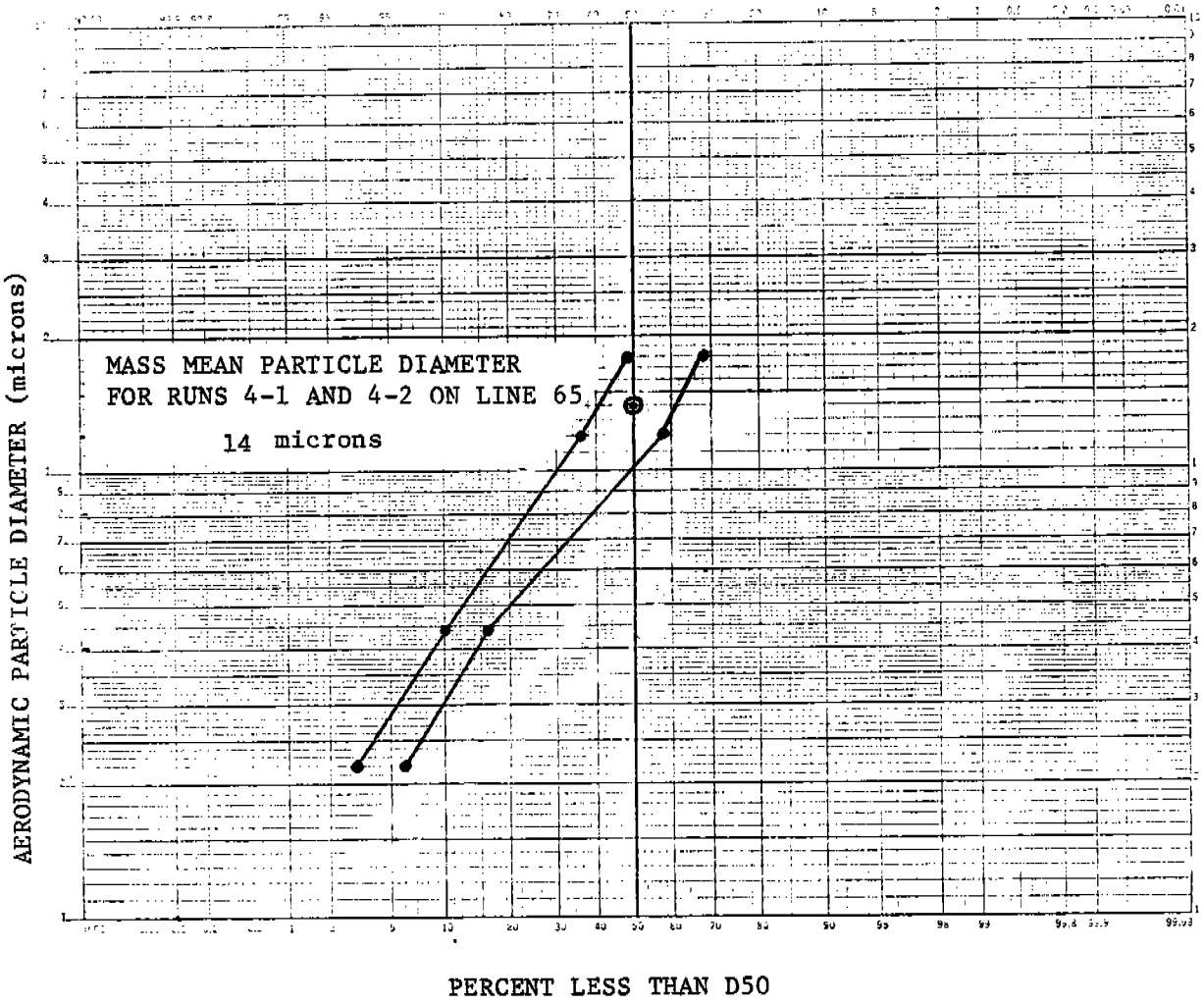

FIGURE 12. MASS MEAN PARTICLE SIZE DISTRIBUTION OF CHROMIC ACID MIST, LINE 65 INLET

acid mist obtained at the Line 65 demister inlet. Tables 14 through 16 detail the results of mass emission testing performed on Line E. Figure 13A is a scanning electron microscope photograph of a sedimentation chamber sample exposed to HCl-laden exhaust gas at the inlet to the Line E scrubber. Figure 13B is a graph of the numerical particle size distribution of HCl mist shown in Figure 13A. Figure 13C is a graph of the mass particle size distribution of HCl mist shown in Figure 13A. Table 17 contains the emission test results for Line A. A comparison between Virginia APCB emission limits and the emission rates measured during Plating Shop testing is presented in Table 18.

The average chromic acid emission rate at the Line 65 demister outlet was .002 lb/hr, well below the Virginia APCB chromic acid emission standard of .04 lb/hr. The average collection efficiency of the Line 65 demister was 95.7%. The average mass mean diameter of the chromic acid mist was 14 um.

The average HCl emission rate at the Line E scrubber outlet was 2.5 lb/hr, well above the Virginia APCB HCl emission standard of .05 lb/hr. Operational problems with the wet scrubber resulted in a average collection efficiency of only 28%. The mass mean diameter of the HCl mist, based on sedimentation chamber samples, was 1.8 um.

The average NaOH emission rate at the Line E scrubber outlet was 0.17 lb/hr, equal to the Virginia APCB emission limit of 0.17 lb/hr.

The HCN emission rate from Line A averaged .007 lb/hr, below the Virginia APCB emission standard of .02 lb/hr.

VI. DISCUSSION

A. Line 65:

The demister, manufactured by Otto H. York Company, Inc., Fairfield, New Jersey, has a high collection efficiency on chromic acid mist. A demister is superior to a wet scrubber in this application from a wastewater treatment standpoint, as the demister produces a low volume, high concentration wastewater, while the wet scrubber produces a high volume, low concentration wastewater. Industrial wastewater treatment is charged on a "per gallon" basis, and the demister produces a fraction of the wastewater generated by the wet scrubber.

The construction specification drawing HV-1[6] shows lateral exhaust ventilation hoods on both sides of tank 65. The "as-built" exhaust hood system on tank 65 consists of a single lateral exhaust hood. A single lateral exhaust hood does not provide adequate ventilation for a tank four feet wide.[7]

B. Line E:

The Heil Model 735 wet scrubber on Line E had been operated "wet" for one day prior to emission testing. Operational problems with the scrubber almost immediately disrupted testing of Line E. There are no viewports on the scrubber, and the two flowmeters indicating water flowrate to the scrubber spray system are broken. Flow control valves on the scrubber water piping network lack identification. There was no way to determine whether the

TABLE 14
CHEMICAL ANALYSIS RESULTS
MASS EMISSIONS TEST--LINE E

Run No.	Specie	Total Pollutant Wt. Collected (mg)	Sample Volume (m^3)	Pollutant Concentration (mg/m^3)	Pollutant Concentration (lb/hr)	Scrubber Efficiency For Cl^-
2-2 In	Cl^-	421.8	1.940	217.5	7.2	
	NO_3^-	0.12		0.06	0.002	
	Na^+	5.57		2.9	0.10	
2-2 Out	Cl^-	139.3	1.963	71.0	2.6	67.4%
	NO_3^-	0.08		0.04	0.002	
	Na^+	6.43		3.3	0.12	
2-3 In	Cl^-	248.0	1.766	140.5	4.8	
	NO_3^-	0.05		0.03	0.001	
	Na^+	5.51		3.1	0.10	
2-3 Out	Cl^-	249.2	1.975	126.2	4.7	10.2%
	NO_3^-	0.04		0.02	0.001	
	Na^+	5.49		2.8	0.10	
2-4 In	Cl^-	10.5	1.843	5.7	0.2	
	NO_3^-	0.06		0.03	0.001	
	Na^+	4.33		2.4	0.08	
2-4 Out	Cl^-	10.0	1.904	5.3	0.2	7.0%
	NO_3^-	0.07		0.04	0.001	
	Na^+	4.23		2.2	0.08	

Ave. Outlet Conc: Cl^- = 2.5 lb/hr
Ave. Outlet Conc: NO_3^- = 0.001 lb/hr
Ave. Outlet Conc: Na^+ = 0.10 lb/hr

TABLE 15
SIZE DISTRIBUTION OF HYDROCHLORIC ACID (HCl) MIST
INLET MASS EMISSIONS TEST--LINE E

Run No.	Sample Location	Pollutant Weight (mg)	Percentage of Total Catch	Particle Diameter (um)
2-2 In	Probe Wash	57.0	13%	$x \geq 5$ um
	Filter	10.9	3%	5 um $> x \geq 0.1$ um
	Impingers	353.9	84%	0.1 um $> x$
2-3 In	Probe Wash	12.6	5%	$x \geq 5$ um
	Filter	8.2	3%	5 um $> x \geq 0.1$ um
	Impingers	227.2	92%	0.1 um $> x$
2-4 In	Probe Wash	Very low emission measured		
	Filter	HCL in tank exhausted		
	Impingers			

TABLE 16
AVERAGE SIZE DISTRIBUTION OF HYDROCHLORIC ACID (HCl) MIST
INLET MASS EMISSIONS TEST (RUNS 2-2 AND 2-3)--LINE E

Sample Location	Total Pollutant Weight (mg)	Percentage of Total Catch	Particle Diameter (um)
Inlet, Probe Wash	69.6	10%	$x \geq 5$ um
Inlet, Filter	19.1	3%	5 um $> x \geq 0.1$ um
Inlet, Impingers	581.1	87%	0.1 um $> x$

FIGURE 13A. SCANNING ELECTRON MICROSCOPE (SEM) PHOTOGRAPH OF SILVER CHLORIDE PRODUCED BY HCI MIST 1000X

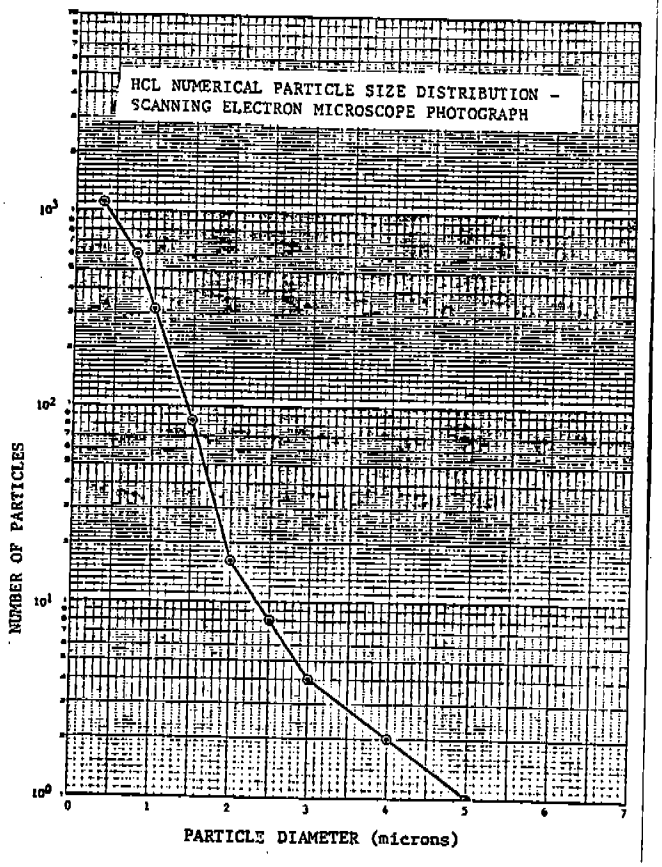

FIGURE 13B. NUMERICAL PARTICLE SIZE DISTRIBUTION OF HCI MIST IN SEM PHOTOGRAPH

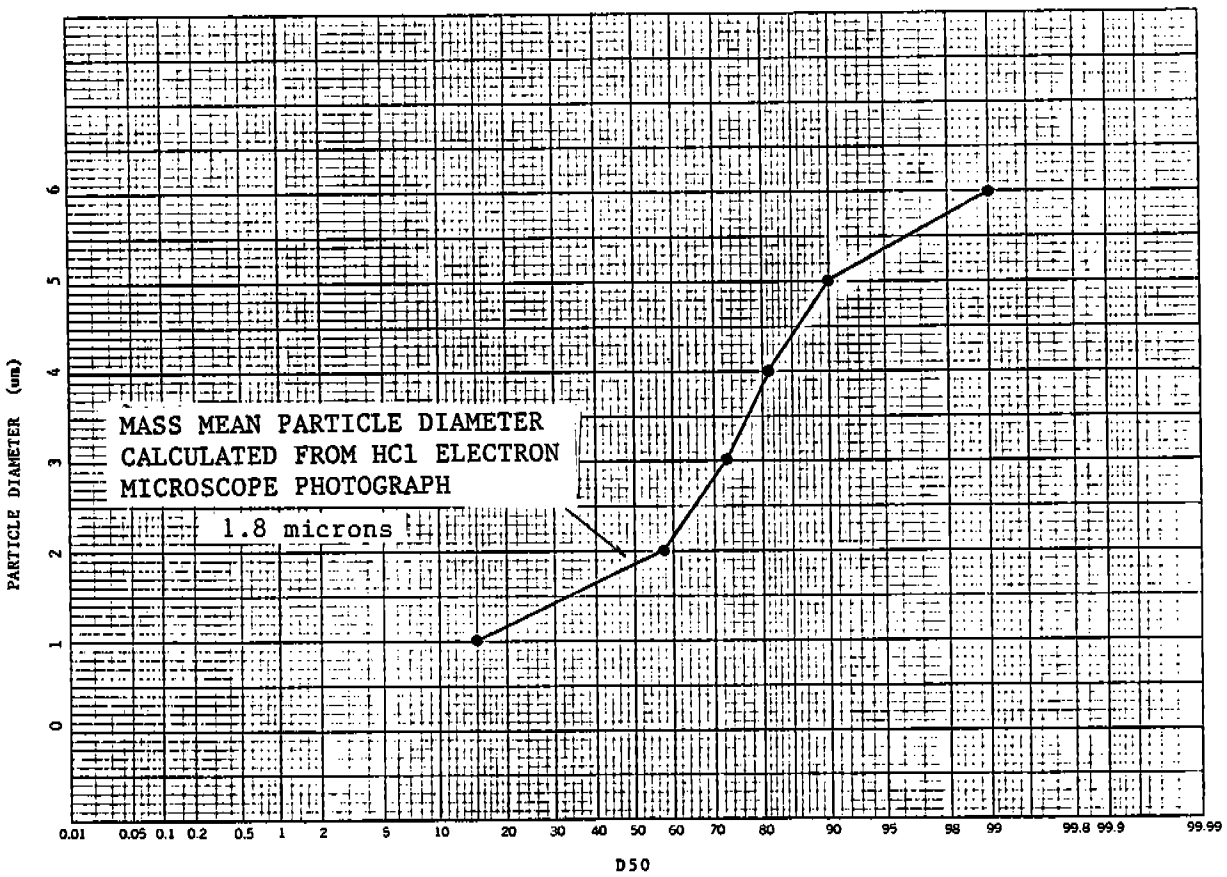

FIGURE 13C. MASS MEAN PARTICLE SIZE DISTRIBUTION OF HYDROCHLORIC ACID MIST IN SEM PHOTOGRAPH

TABLE 17
CHEMICAL ANALYSIS RESULTS
MASS EMISSIONS TEST--LINE A

Run No.	Specie	Total Pollutant Wt. Collected (mg)	Sample Volume (m^3)	Pollutant Concentration (mg/m^3)	Pollutant Concentration (lb/hr)
3-1	Cd^{++}	0.0015	2.057	< .001	<.00003
	CN^-	0.518		0.25	.007
3-2	Cd^{++}	0.0013	2.053	< .001	< .00003
	CN^-	0.503		0.25	.007
3-3	Cd^{++}	0.0034	1.981	< .002	< .00006
	CN^-	0.487		0.25	.007

Ave. Outlet Conc: Cd^{++} = < .0003 lb/hr
Ave. Outlet Conc: CN^- = .007 lb/hr

TABLE 18
COMPARISON BETWEEN VIRGINIA APCB EMISSION LIMITS AND MEASURED EMISSION RATES

Emission Source	Specie	Virginia APCB Emission Limit (lb/hr)	Measured Outlet Emission Rate (lb/hr)
Line 65	CrO_3	.04	.002
Line E	HCl	.05	2.5*
	NaOH	.17	.17
Line A	HCN	.02	.007

*See "Discussion" section of this report for an explanation of this outlet emission rate.

scrubber spray system was functioning correctly during emission testing. Test results indicate that scrubber water flow was inadequate or non-existent during the emission test.

The wet scrubber on Line D is identical to the unit on Line E and has a similar operational history. Repairs and modifications made to Line E scrubber should also be made to the scrubber on Line D.

The HCl tank (tank 26) was empty when the test team arrived onsite. Recent changes in Norfolk NAVSHIPYD metal cleaning procedures have reduced the need for HCl stripping in the Plating Shop. A 55-gallon drum of concentrated HCl was placed in tank 26 to allow emissions testing to proceed.

Testing was initially attempted using baskets of cadmium-plated steel bolts as the workpieces. The cadmium was stripped so quickly that little action was observed in the tank over time. Little or no HCl mist was evolved.

Scrap pieces of aluminum were substituted for the cadmium plated bolts to achieve more action in the tank. HCl readily attacks aluminum and a very high level of HCl mist is generated with aluminum in the tank. However, the stripping of aluminum in the HCl tank is <u>not</u> a representative plating shop metal stripping operation. The stripping of aluminum in this tank was done strictly to generate sufficient HCl emissions to accurately measure scrubber efficiency and to measure the particle size distribution of the HCl mist.

A bucket containing two gallons of concentrated nitric acid (HNO_3) was placed in tank 28 and loaded with stainless steel plate during testing. The passivation of stainless steel in nitric acid produced no observable reaction, and no significant HNO_3 emissions were measured.

C. <u>Line A</u>:

Measured cyanide emissions are below the Virginia APCB emission limit, confirming that emissions from heavy metal plating processes do not warrant air pollution controls.

VII. CONCLUSIONS

A. <u>Line 65</u>:

The demister collection efficiency was high, resulting in an average chromic acid emission rate well below the Virginia emission limit. Because a demister produces a low volume, high concentration wastewater, resulting in reduced wastewater treatment costs, a demister is superior to a wet scrubber for controlling chromic acid mist emissions.

A single, lateral exhaust hood is not adequate for the hard chrome plating tank, Tank 65. A second lateral exhaust hood on Tank 65 is recommended.

B. <u>Line E</u>:

The collection efficiency of the wet scrubber was low, averaging 28%. Broken flowmeters, lack of visual inspection points, and lack of

identification on flow control valves made it impossible to adjust the scrubber spray system for proper scrubber operation. The low scrubber efficiency measured during testing is primarily attributable to the lack of flow indicating devices and the lack of visual inspection points.

Also, the use of aluminum as the workpiece is not recommended for compliance emission testing. Aluminum stripping in HCl is a much more active process than typical HCl stripping operations performed in the Plating Shop. Future emission testing of the HCl exhaust line should be performed using representative workpieces to prevent the extraordinarily high and unrepresentative emissions generated by sacrificing aluminum in the HCl tank.

C. Line A:

The cyanide outlet emission rate was low, averaging .007 lb/hr. The emission test confirms that emissions from heavy metal plating processes are below the Virginia emission limit of .02 lb/hr and do not warrant air pollution controls.

VIII. RECOMMENDATIONS

A. Line 65:

1. Add a second lateral exhaust hood to tank 65. See the construction specification for design details.

2. Tank 63 is similar to tank 65 and also requires a second lateral exhaust hood to meet industrial ventilation standards.

B. Line E:

1. Repair the two flowmeters on the Line E scrubber.

2. Install a sight-glass for visual confirmation of the liquid level in the scrubber sump.

3. Install two viewports, 180° apart, at the same level as the scrubber spray system to allow visual confirmation of spray nozzle function.

4. Clearly identify all flow control valves on piping connected to the scrubber.

5. Recommend that similar modifications be performed on the Line D scrubber.

6. Perform emission tests on the scrubber following the completion of modifications. Operate the scrubber for at least 30 days prior to emission testing to ensure proper operation.

C. Line A:

No recommendations.

REFERENCES

1. Meeting btwn Norfolk NAVSHIPYD (Code 441) R. White/LANTNAVFACENGCOM (Code 114) M. Davenport/NEESA (NEESA-111C) W. Powers on 5 Dec 84.

2. Ltr from Virginia Air Pollution Control Board to LANTNAVFACENGCOM (LCDR Dempsey), Permit Registration No. 60326 of 27 Oct 81.

3. Federal Register, Environmental Protection Agency, Standards of Performance for New Stationary Sources, Vol 42, No. 160, August 1977.

4. American Society of Mechanical Engineers Performance Test Code (PTC) 28 Determining Properties of Fine Particulate Matter, (draft edition).

5. Pollution Control Systems Corporation, Operations Manual, Pilat Mark 3 and Mark 5 Source Test Cascade Impactors, Seattle, Washington, January 1983.

6. Contract N62470-79-B-9333, Building 195 Plating Shop Modifications, Norfolk Naval Shipyard, Portsmouth, Virginia.

7. Industrial Ventilation a Manual of Recommended Practice, Committee on Industrial Ventilation, American Conference of Governmental Industrial Hygienists, Ann Arbor, Michigan, Seventeenth Edition, 1982. Pp 5-66.

8. Heil Process Equipment Company Bulletin B-730-2, Heil Fume Scrubbers, Cleveland, Ohio. September 1974. Phone No. (216) 252-4141.

APPENDIX A
TANK DATA

TANK ELECTRICAL DATA SHEET

TEST 1 RUN 1

Location: NNSY
Building: 195
Tank: 65 CHROME PLATE
Scrubber: DEMISTER
Read by: POWERS
Date: 13 ~~FEB~~ MAR 85

Rectifier
Make: RAPID ELECTRIC CO.
Type: 480V/96 AMP AC IN / 12V. / 5000 AMP DC OUT
Voltage Rating: 12V.
Amperage Rating: 5000 AMP
Workplace Size

Time	Reading	Avg. Reading	Time	Reading	Avg. Reading
2230	V = 6.6 V.				
	A = 2720 AMPS				
2250	V. = 6.6				
	A. = 2780 AMPS				
2310	V. = 6.6 V.				
	A = 2800 AMPS				
2330	V. = 6.7 V				
	A = 2880 AMPS				
2350	V = 6.7 V.				
	A. = 2870 AMPS				
	~~V = 6.8V~~				
	~~A = 2540~~ AMPS				

TANK CONTENTS:

5000 IN SQ. SURFACE AREA
(~ 33 FT²)

DESCRIPTION

2 ROTOR SHAFTS
21 1/16" THICK STEEL DUMMIES
AVERAGING 1 FT² TO 2 FT²
TOTAL SURFACE AREA EACH

TANK ELECTRICAL DATA SHEET

TEST 1
RUN 2

Location NNSY
Building
Tank
Scrubber
Read by
Date

Rectifier
Make
Type
Voltage Rating
Amperage Rating
Workplace Size

Time	Reading	Avg. Reading	Time	Reading	Avg. Reading
1600	V = 6.2V				
	A = 2100 AMP				
1620	V = 6.8 V.				
	A = 2510 AMP				
1642	V = 6.8V				
	A = 2540 AMPS				
1702	V = 6.8 V.				
	A = 2555 AMPS				
1722	V = 6.8 V				
	A = 2545 AMPS				
1740	V = 6.8V				
	A = 2500 AMPS				
1800	V = 6.9				
	A = 2430 AMPS				

TANK ELECTRICAL DATA SHEET

Location _____
Building _____
Tank _____
Scrubber _____
Read by _____
Date 14 MARCH 85

Rectifier _____
Make _____
Type _____
Voltage Rating _____
Amperage Rating _____
Workplace Size _____

TEST 1 RUN 3

Time	Reading	Avg. Reading	Time	Reading	Avg. Reading
2040	V = 6.9 V.				
	A = 2500	AMP			
2130	V = 7.0 V.				
	A = 2410	AMPS			
2150	V = 7.0 V.				
	A = 2500	AMP			
VOLTAGE WRITTEN THE FOREMAN 2210	V = 5.8	VOLT			
	A = 1760	AMP			
2240	V. = 5.8	V			
	A. = 1760	AMP			

TANK ELECTRICAL DATA SHEET

Location: NNSY
Building: BLDG 195
Tank: 30
Scrubber: YES
Read by: POWERS
Date: 15 MAR 85

Rectifier
Make
Type
Voltage Rating
Amperage Rating
Workplace Size

TEST 2 RUN 2 LINE E

	Time	Reading	Avg. Reading	Time	Reading	Avg. Reading
⇒ TEST START	2000	TANK 30	EXTREMELY ACTIVE			
		TANK 28	NO ACTION			
		TANK 26	SOME ACTION + AIR AGITATION			
	2020	TANK 30	NEW PIECE ADDED EXTREMELY ACTIVE	HEAVY FUMING		
		TANK 28	CONSTANT			
		TANK 26				
	2040	TANK 30	NEW PIECE ADDED EXTREMELY ACTIVE	HEAVY FUMING		
		TANK 28	CONSTANT			
		TANK 26				
	2105	TANK 30	NEW PIECE ADDED EXTREMELY ACTIVE	HEAVY FUMING		
		TANK 28	CONST.			
		TANK 26				
	2120	TANK 30	MODERATELY ACTIVE	MED. TO HEAVY FUMING		
		TANK 28				
		TANK 26				

TANK CONTENTS:

HCl TANK 30: 1 ALUMINUM BOX BEAM(S): 2 FT²
NO3 TANK 28: 1 TATEN SS DUMMIES: 2 FT² TOTAL

TANK ELECTRICAL DATA SHEET

Location: NNSY
Building: BLDG 195
Tank: LINE E
Scrubber: YES
Read by: POWERS
Date: 15 MAR 85

Rectifier:
Make:
Type:
Voltage Rating:
Amperage Rating:
Workplace Size:

TEST 2 RUN 3

Time	Reading	Avg. Reading	Time	Reading	Avg. Reading
2330	TANK 30	EXTREMELY ACTIVE HEAVY FUMING			
	TANK 28	NO ACTION			
	TANK 26	LIGHT ACTION + AIR AGITATION			
2359	TANK 30	VERY ACTIVE FUMING			
	TANK 28	CONST.			
	TANK 26				
0040	TANK 30	MODERATELY ACTIVE STEADY FUMING			
	TANK 28	CONST.			
	TANK 26				
0100	TANK 30	MODERATELY ACTIVE STEADY FUMING			
	TANK 28	CONST.			
	TANK 26				

TANK LOAD INFO:
TANK 30 (HCL): 1 OR 2 [2 FT² TOT. SUR. AREA] Al BOX BEAM SCRATS
TANK 28: 2 FT² SS PCS.
TANK 26: 1 3 FT² STEEL PL.

TANK ELECTRICAL DATA SHEET

Location: NNSY
Building: 195
Tank: 30, 28, 26 LINE E
Scrubber: YES
Read by: FOWERS
Date: 16 MAR. 85

Rectifier
Make
Type
Voltage Rating
Amperage Rating
Workplace Size

TEST 2 RUN 4 LINE E

	Time	Reading	Avg. Reading	Time	Reading	Avg. Reading
TEST START	1320	TANK 30 (HCl)	MODERATELY ACTIVE NO VISIBLE FUMING	HCl APPEARS NEARLY DEPLETED		
		TANK 28	NO ACTION			
		TANK 26	NO ACTION + AIR AGITATION			
	1405	TANK 30	MODERATELY ACTIVE SLIGHT FUMING			
		TANK 28	CONST.			
		TANK 26				
TEST STOP	1440	TANK 30	SLIGHT ACTION LITTLE TO NO FUMING			
		TANK 28	CONST.			
		TANK 26				

(HCL) TANK 30 3 FT² OF 1/4" THICK AL BOX BEAM
(NO_3) TANK 28: 2 FT² OF 1/16" THICK SS DUMMIES
(NaOH) TANK 26: 3 FT² OF 1/16" THICK STEEL DUMMY

RUN 1

LINE A

TANK ELECTRICAL DATA SHEET

Location Plating Shop NSY
Building 195
Tanks # 1, 4, 5, 6, 8
Scrubber
Read by SENTENO
Date MAR 18, 85

Rectifier Rapid Electric
Make
Type
Voltage Rating ON BACK SIDE
Amperage Rating
Workplace Size

Time	Reading		Avg. Reading		Time	Reading	Avg. Reading
minutes 9:40	1:	Vs:	5	As: 80	NO ACTION		
after test	~~4:~~	~~Vs:~~	~~4~~	~~As: 120~~			
	5:	Vs:	4	As: 120	slight bubbling		
	6:	Vs:	4.2	As: 30	NO ACTION		
	8:	Vs:	4.2	As: 60	NO ACTION		
10:00	1	Vs:	5	As: 80	NO ACTION		
	~~4~~	~~Vs:~~		~~As~~			
	5	Vs:	4.2	As: 120	MODERATE ACTION (Bubbling)		
	6	Vs:	4.2	As: 20	NO ACTION		
	8	Vs:	2.2	As: 50	NO ACTION		
10:15	1	Vs	5	As: 70	slight Bubbling		
	~~4~~	~~Vs~~		~~As~~			
	5	Vs	4.1	As 120	moderate action		
	6	Vs	4.2	As 20			
	8	Vs	2.2	As 160	NO ACTION		
10:16	1	Vs	10	As	280		
	~~4~~	~~Vs~~		~~As~~			
	5	Vs	9.9	As	620	H	
	6	Vs	8.8	As ~~160~~	160	HEAVY Action	
	8	Vs	10	As	280	HEAVY Action	

TANK CONTENTS:

#1: STEEL PLATES (CYANIDE)

OUT ~~#4:~~ "

#5: " " (ZINC NITE)

#6: STEEL PLATES (BRASS CYANIDE)

#8: " (CADIUM ~~CYANIDE~~ PLATE)

TANK ELECTRICAL DATA SHEET

Location _____
Building _____
Tank _____
Scrubber _____
Read by _____
Date _____

Rectifier _____
Make _____
Type _____
Voltage Rating _____
Amperage Rating _____
Workplace Size _____

Time	Reading	Avg. Reading	Time	Reading	Avg. Reading
10:30	#1	Vs = 10	As = 210	Tank Moderate Bubbling	
	#5	Vs = 9.9	As = 620	Heavy Action	
	#6	Vs = 8.8	As = 60	Moderate Bubbling	
	#8	Vs = 10.2	As = 280	Heavy Bubbling	
10:45	#1	Vs = 10	As = 210	Moderate Action from Tank	
	#5	Vs = 10	As = 610	Heavy Action	
	#6	Vs = 8.8	As = 60	Slight Action	
	#8	Vs = 10.2	As = 280	Tank covered white w/bubbles	
11:00	#1	Vs = 10.2	As = 220	Tank Slight Action	
	#5	Vs = 10	As = 580	Still Heavy Action	
	#6	Vs = 8.8	As = 60	Slight Action	
	#8	Vs = 10.2	As = 280	Tank Covered w/Bubbles	
11:15	#1	Vs: 10.2	As: 280	Tank Moderate Bubbling	
	#5	Vs: 10	As: 580	Heavy Bubbling	
	#6	Vs: 8.8	As: 60	Slight Action (Bubbles)	
	#8	Vs: 10.2	As: 280	Tank Covered white w/Bubbles	
11:30	#1	Vs: 10.2	As: 210	Tank Moderate Bubbling	
	#5	Vs: 10	As: 580	Heavy Bubbling	
	#6	Vs: 8.8	As: 60	Slight Action	
	#8	Vs: 10.2	As: 280	Tank Covered White w/Bubbles	

TANK CONTENTS: #1: CYANIDE
#5: ZINC PLATE
#6: BRASS CYANIDE
#8: CADIUM PLATE

TANK ELECTRICAL DATA SHEET

Location _____
Building _____
Tank _____
Scrubber _____
Read by _____
Date _____

Rectifier _____
Make _____
Type _____
Voltage Rating _____
Amperage Rating _____
Workplace Size _____

Time	Reading	Avg. Reading	Time	Reading	Avg. Reading
11:45	#1	10.2 V 280 A	Tank	Moderate	Bubbling
	#5	10 V 580 A	Heavy	Bubbling	
	#6	8.8V 60 A	Slight	Action in	Tank
	#8	10.2V 280 A	Tank	Covered	White w/Bubbles
12:00	#1	10.1 V 210 A	Tank	Moderate	Bubbles
	#5	10 V 580 A	Heavy	Bubbles	Around Plates
	#6	8.8 V 60 A	Slight	Bubbles	
	#8	10.2 V 290 A	Tank	Covered	White w/Bubbles

RUN 2

LINE A

TANK ELECTRICAL DATA SHEET

Location: Plating Shop
Building: 195
Tanks: #1, 5, 6, 8
Scrubber:
Read by: SENTENO
Date: MAR. 18, 85

Rectifiers: #1, 5, 6, 8
Make: Rapid Electric
Type:
Voltage Rating: ON BACK SIDE
Amperage Rating:
Workplace Size:

Time	Reading	Avg. Reading		Time	Reading	Avg. Reading
1:00 pm	#1	10 V	200 A	Moderate Bubbling around Plates		
	#5	9.9 V	580 A	Heavy Bubbling Around Plates		
	#6	8.7 V	60 A	Slight Bubbling Action		
	#8	10 V	290 A	Tank Covered White w/ Bubbles		
1:15	#1	10 V	210 A	Moderate Bubbling around Plates		
	#5	10 V	580 A	Heavy Bubbling Around Plates		
	#6	8.7 V	60 A	Slight Bubbling Action		
	#8	10 V	300 A	Tank Covered White w/ Bubbles		
1:30	#1	10 V	210 A	Slight Bubbling around Plates		
	#5	~~[illegible]~~ 10 V	~~[illegible]~~ 580 A	Slight Bubbling around Plates		
	#6	8.7 V	60 A	Same		
	#8	10 V	300 A	Same		
1:45	#1	10 V	210 A	Same		
	#5	9.9 V	580 A	Same		
	#6	8.7 V	60 A	Same		
	#8	10 V	300 A	Same		
2:00	#1	10 V	210 A	Same		
	#5	9.9 V	580 A	Same		
	#6	8.7 V	60 A	Same		
	#8	10 V	300 A	Same		
2:15	Same @ 200					

Tanks filled with Steel Plates

EST 3, RUN 3
LINE A

TANK ELECTRICAL DATA SHEET

Location: Plating Shop
Building: 1251
Tanks: 1, 5, 6, 8
Scrubber:
Read by: SUZUKI
Date: 18 MAR 85

Rectifier: 1, 5, 6, 8
Make: Rapid Electric
Type:
Voltage Rating:
Amperage Rating:
Workplace Size:

Time	Reading	Avg. Reading		Time	Reading	Avg. Reading
340	#1	10.1 V	210 A	Slight Bubbling around Plates		
	5	10 V	590 A	Slight Bubbling around Plates		
	6	8.8 V	65 A	Slight Bubbling around Plates		
	8	9 V	300 A	Tank forced white w/ Bubbles		
400	#1	10.1 V	220 A	Same as above		
	5	10 V	630 A	Same as above		
	6	8.8 V	65 A	Same as above		
	8	9 V	300 A	Same as above		
415	#1	10 V	238 A	Same as above		
	5	10 V	630 A	Same as above		
	6	8.8 V	65 A	Same as above		
	8	10 V	300 A	Same as above		
430	#1	10.1 V	240 A	Same as above		
	5	10 V	630 A	Same as above		
	6	8.8 V	65 A	Same as above		
	8	10 V	310 A	Same as above		
445	#1	10.1 V	240 A	Same as above	5pm	10.1 V 240 A
	5	10 V	630 A	Same as above		10 V 630 A
	6	8.8 V	70 A	Same as above		8.8 V 70 A
	8	10 V	310 A	Same as above		10 V 310 A

Tanks filled with Steel Plates

APPENDIX B
FIELD DATA

PARTICULATE SAMPLE BOX SET UP
CHECKLIST

DATE: _____
PLANT: Bldg 195
LOCATION: Portsmouth NSY
PREP. BY: C. Yee

Test 1 INCET
RUN NO.: 1
STACK NO: line 65
SAMPLE BOX NO.: 7

( ) 1. Wash all glassware with distilled water and then acetone.

( ) 2. Place approx. 100 ml distilled water in the first impinger, a modified Greenburg-Smith with straight tube 1/2 inch from the impinger bottom. Record exact weight to 1/10 of a gram.

( ) 3. Place approx. 100 ml distilled water in the second impinger, a standard Greenburg-Smith impinger (caricell tip). Record exact weight to 1/10 of a gram.

( ) 4. Impinger three is a dry modified Greenburg-Smith with straight tube 1/2 inch from the impinger bottom. Record dry tare weight to 1/10 of a gram.

( ) 5. Place approx. 175 ml of silica gel in the fourth impinger, a modified Greenburg-Smith with straight tube 1/2 inch from the impinger bottom. Record exact weight to 1/10 of a gram.

( ) 6. PLACE TARED FILTER INTO FILTER HOLDER ON THE CYCLONE SIDE OF THE HOLDER. Smooth side of filter is to face frittered glass of filter holder. Record filter number and weight.

Impinger No.	Impinger weights (GRAMS)	Tare	Initial	Final	Condensate	
7-1	1. 100 ml	506.0	706.7	673.7	33	
7-2	2. 100 ml 0.1N KOH	492.0	693.7	697.5	3.8	
7-3	3. Dry	504.3		537.5	33.2	TOTAL
7-4	4. 175 g silica gel	471.3	654.0	669.1	15.1	85.1

85.1

Filter No	Tare	Final	Net	
				TOTAL

( ) 7. Assemble flask, cyclone, and filter holder.

( ) 8. Assemble impinger bottles and glass elbows so air flows from a small hole to a larger hole.

11ND-CBC-3960/47 (REV. 11-78)

SOURCE EMISSIONS TESTING DATA SHEET
11ND-CBC-3960/62 (Rev. 11-78)

PLANT: NORFOLK LINE 63	LOCATION: LINE 63		AMBIENT TEMPERATURE: 57	BAROMETRIC PRESSURE, IN HG: 29.92
OPERATOR: SENT / FOER	DATE: 03/13/85		ASSUMED MOISTURE, %: 1.5	HEATER BOX SETTING: N/A
RUN NO. 1	SAMPLE BOX NO.		PROBE # (PITOT #): 3.1	PROBE LENGTH, in.: 36
METER BOX NO. 3	METER ΔH@: 2.091		NOZZLE I.D. NO. TEFLON ¼" ~~0.244~~ NOZZLE	NOZZLE DIAMETER, in.: 0.244
C FACTOR (Nomograph)	PITOT COEFFICIENT, CP: 0.82	SCHEMATIC OF STACK CROSS SECTION (Show Traverse Points)	PROBE HEATER SETTING: N/A	PROBE LINER MATERIAL: GLASS / LEAK RATE (CFM) @ " HG: 0.004 @ 22

TRAVERSE POINT NUMBER	SAMPLING TIME (e) MIN	GAS METER READING (V_m) ft³	STACK TEMPERATURE (T_s) °F	VELOCITY HEAD (ΔP_s) In. H_2O	PRESSURE ACROSS ORIFICE (ΔH) In. H_2O	GAS SAMPLE TEMPERATURE AT DRY GAS METER: Inlet (T min) °F	GAS SAMPLE TEMPERATURE AT DRY GAS METER: Outlet (T mout) °F	SAMPLE BOX TEMPERATURE °F	TEMPERATURE IMPINGER °F	SAMPLE VACUUM in. Hg.	CO_2 %	O_2 %
0	~~0~~ @ 2800	348.618	58	0.40	1.68	67	75		52	5.0		20.9
1	6	352.8	75	0.49	2.10	68	97		38	5.2		
2	12	357.2	82	0.58	2.48	71	110		41	6.1		
3	18	362.1	84	0.68	2.94	74	119		42	7.1		
4	24	367.5	84	0.72	3.16	79	128		43	7.6		
5	30	373.2	85	0.78	3.46	84	134		44	8.2		
6	36	379.15	84	0.85	3.79	88	139		44	8.5		
7	42	385.35	84	0.92	4.12	92	143		45	8.9		
8	48	391.80	85	~~1.00~~ 0.92	4.15	95	145		46	8.9		
9	54	398.35	85	~~0.90~~ 1.00	4.52	97	147		46	9.6		
10	60	405.10	85	0.90	4.08	99	149		47	8.5		
11	~~66~~	411.60	85	0.89	4.03	101	149		46	8.5		
12 TOTAL		418.20										
AVERAGE			#2	#1	#4	#3	#3					

POST LEAK CHECK
0.008 CFM @ 10" Hg

B-2

```
*******************************
TEST IS PARTICULATE FOR
60" UPSTREAM, 12" DOWNSTREAM
24" DIAMETER ROUND STACK
###############################
DEPTHS TO INSERT PROBES
*******************************
```

POINT 1 = 0 9/16"

POINT 2 = 1 5/ 8"

POINT 3 = 2 7/ 8"

POINT 4 = 4 1/ 4"

POINT 5 = 6"

POINT 6 = 8 9/16"

POINT 7 = 15 7/16"

POINT 8 = 18"

POINT 9 = 19 3/ 4"

POINT10 = 21 1/ 6"

POINT11 = 22 3/ 8"

POINT12 = 23 7/16"

VELOCITY TRAVERSE

--dP--	--SQRT dP--
0.330	0.574
0.455	0.675
0.560	0.748
0.670	0.819
0.720	0.849
0.765	0.875
0.865	0.930
0.915	0.957
0.935	0.967
0.990	0.995
0.970	0.985
0.925	0.962
0.330	0.574
0.455	0.675
0.560	0.748
0.670	0.819
0.720	0.849
0.765	0.875
0.865	0.930
0.915	0.957
0.935	0.967
0.990	0.995
0.970	0.985
0.925	0.962

dP RMS = 0.742

```
TEST NO.?

                XEQ "NOMO 2"
                        RUN
EPA METHOD
5 NOMOGRAPH
PROGRAM

ENTER THE
FOLLOWING
DATA AS
REQUIRED.

PUSH R/S
AFTER
EACH DATA
ENTRY.

TEST
NUMBER=?
          1.000     RUN

RUN NO. ?
          1.000     RUN

FILTER
NUMBER=?
          1.000     RUN

INITIAL
METER VOL
FT3=?
         00.000     RUN
STACK
STATIC
PRESSURE
/PS/
IN. H2O=?
         -4.700     RUN
BAROMETER
PRESSURE
/PB/
IN. HG=?
         29.920     RUN
% H2O=?
          1.500     RUN
SAMPLE RATE
/QM/
CFM=?
           .750     RUN
STACK GAS
MOL WT
/MW/
LB/LB MOL=?
          28.80     RUN

AVG STACK
TEMP /TS/
DEG F=?
          82.25     RUN
```

INLET LINE 65

```
AVG DELTA
P=? IN. H2O
            .75     RUN

AMBIENT
TEMP F=?
        75.0000     RUN

PITOT TUBE
COEFF
CP=?
            .82     RUN

AVG STACK
VELOCITY
                2,902.895
FPM....

IDEAL
NOZZLE
DIAMETER
INCHES
                    0.222

ENTER THE
ACTUAL
NOZZLE
DIAMETER
TO BE USED
ON
INCHES...
           .244     RUN
DELTA H
AT=?
        2.0910      RUN
                    2.091

ENTER THE
FOLLOWING
FOR EACH
TRAVERSE
POINT
******
DP
IN. H2O=?
PUSH STO A

TS DEG F
PUSH STO B

TM DEGR F
PUSH STO C, R/S
***
AFTER LAST
DATA POINT PUSH
0, STO A, R/S
*******

           .400 STO 01
         60.370 STO 02
         77.850 STO 03
                    RUN
```

```
THE
FOLLOWING
IS GIVEN
FOR TRANSFER
TO THE
ISOKINETIC
PROGRAM 2
/FILE 5/

VELOCITY
PARAMETER
                   28.15
AVG METER
TEMP.
DEG F=
                    129.
AVG DELTA
H=  IN. H2O
                  3.373
AVG
DELTA P=
                  0.748

FINAL METER
VOLUME FT3=?
         69.590     RUN
                 69.590
INITIAL
METER VOL. FT3
                  0.000
ABSOLUTE
STACK PRES
PS IN. HG
                  29.57
AVG STACK TEMP
DEG F
                    82.
GEOMETRIC AVG
ABSOLUTE STACK
TEMP. DEG R
                542.154
STANDARD
CONDITIONS ARE
29.92126 IN. HG
68.0 DEG F
******
END PROGRAM
```

```
            XEQ "ISOKIN2"
EPA METHOD
FIVE
ISOKINETIC
PROGRAM 2

ENTER DATA
FROM THE
NOMOGRAPH
PRGM.
AS REQUESTED

TEST NO.?
                1.    RUN
                      RUN
RUN NO.?
                1.    RUN
FILTER NO.?
                1.    RUN
VELOCITY
PARAMETER KV=?
            20.15     RUN
AVG METER
TEMP TM DEG F=?
             129.     RUN
DEG R =589.

AVG DELTA H
IN. H2O=?
            3.373     RUN
AVG DELTA P
IN. H2O=?
             .748     RUN
FINAL METER
VOL. FT3=?
           69.590     RUN
INITIAL METER
VOLUME FT3=?
            0.000     RUN
ABSOLUTE
STACK PRES.
IN. HG=?
           29.570     RUN
IS THE % H2O
KNOWN?

0 = YES
1 = NO
             1.00     RUN
ATER GAIN, G=?
            85.10     RUN
% CO2 =?
             0.00     RUN
%O2 =?
            20.90     RUN
                      RUN
CO =?
             0.00     RUN
PITOT COEF CP=?
              .82     RUN
```

```
SAMPLE TIME
MIN =?
           72.000     RUN
NOZZLE
DIAMETER IN. =?
             .244     RUN
ROUND STACK?
1 = YES
0 = NO
            1.000     RUN
STACK DIA. IN.?
           24.000     RUN
AVG STACK TEMP
DEG F =?
             82.0     RUN
METER CALBRTN
FACTOR G =?
          1.0001     RUN
=======
NET METER
VOL. FT3=
                 69.597
CORRECTED
SAMPLE VOL.
VMSTD  SCF=
                 61.656
MOLE FRACTION
DRY GAS MD=
                  0.939
MOLECULAR WT
STACK GAS MW
LB/LB MOL=
                 28.173
AVG VELOCITY
FPM =?
               2,932.83
STACK AREA
AS SQ. IN.=
                  452.4
STACK DRY
FLOW QS  SCFM=
               8,324.86
ACFM
               8,650.20
EXCESS AIR %
              33,983.74
**********
ISOKINETIC %I=
                   99.5
*********



SORRY. YOU BLEW
IT, SCREWBALL,
BETTER LUCK
NEXT TIME.

STANDARD
CONDITIONS ARE
29.92126 IN. HG
68.0 DEG F
```

PARTICULATE SAMPLE BOX SET UP

CHECKLIST

Test 1, INLET

DATE: _____

PLANT: Bldg 195

LOCATION: Portsmouth NSY

PREP. BY: C. Yee

RUN NO.: 2

STACK NO: Line 65

SAMPLE BOX NO.: 4

( ) 1. Wash all glassware with distilled water and then acetone.

( ) 2. Place approx. 100 ml distilled water in the first impinger, a modified Greenburg-Smith with straight tube 1/2 inch from the impinger bottom. Record exact weight to 1/10 of a gram.

( ) 3. Place approx. 100 ml distilled water in the second impinger, a standard Greenburg-Smith impinger (caricell tip). Record exact weight to 1/10 of a gram.

( ) 4. Impinger three is a dry modified Greenburg-Smith with straight tube 1/2 inch from the impinger bottom. Record dry tare weight to 1/10 of a gram.

( ) 5. Place approx. 175 ml of silica gel in the fourth impinger, a modified Greenburg-Smith with straight tube 1/2 inch from the impinger bottom. Record exact weight to 1/10 of a gram.

( ) 6. PLACE TARED FILTER INTO FILTER HOLDER ON THE CYCLONE SIDE OF THE HOLDER. Smooth side of filter is to face frittered glass of filter holder. Record filter number and weight.

Impinger No.	Impinger weights (GRAMS)	Tare	Initial	Final	Condensate	
4-1	1. 200 ml	513.5	715.0	712.6	-2.4	
4-2	2. 200 ml 0.1N KOH	503.3	705.3	707.3	2	
4-3	3. Dry	494.4	494.4	495.8	1.4	TOTAL
4-4	4. 175 g silica gel	496.4	674.7	690.9	16.2	17.2

Filter No	Tare	Final	Net	
				TOTAL

( ) 7. Assemble flask, cyclone, and filter holder.

( ) 8. Assemble impinger bottles and glass elbows so air flows from a small hole to a larger hole.

11ND-CBC-3960/47 (REV. 11-78)

SOURCE EMISSIONS TESTING DATA SHEET
11ND-CBC-3960/62 (Rev. 11-78)

PLANT: NORFOLK	LOCATION: LINE 64		AMBIENT TEMPERATURE: 61	BAROMETRIC PRESSURE, IN HG: 29.9
OPERATOR: SENT/FOER	DATE: 03/14/84		ASSUMED MOISTURE, %: 6.1	HEATER BOX SETTING: N/A
RUN NO.: 2	SAMPLE BOX NO.: 4		PROBE # (PITOT #): 3.1	PROBE LENGTH, in.: 36
METER BOX NO.: 3	METER ΔH@: 2.091		NOZZLE I.D. NO.:	NOZZLE DIAMETER, in.: 0.244
C FACTOR (Nomograph)	PITOT COEFFICIENT, CP: 0.82	SCHEMATIC OF STACK CROSS SECTION (Show Traverse Points)	PROBE HEATER SETTING: N/A	PROBE LINER MATERIAL: GLASS / LEAK RATE (CFM) @ " HG: 0.014 @ 15

TRAVERSE POINT NUMBER	SAMPLING TIME (θ) MIN	GAS METER READING (V_m) ft3	STACK TEMPERATURE (T_s) °F	VELOCITY HEAD (ΔP_s) In. H_2O	PRESSURE ACROSS ORIFICE (ΔH) In. H_2O	GAS SAMPLE TEMPERATURE AT DRY GAS METER: Inlet (T min) °F	GAS SAMPLE TEMPERATURE AT DRY GAS METER: Outlet (T mout) °F	SAMPLE BOX TEMPERATURE °F	TEMPERATURE IMPINGER °F	SAMPLE VACUUM in. Hg.	CO_2 %	O_2 %
	0	419.274	60	.32	ESTIMATED 1.8	69	62		50	2.0	0	20
	7.5	424.8	71	.37	ESTIMATED 1.95	92	63		46	2.0		
	15	432?	81	.465	1.8	108	68		48	2.0		
	22.5	435.3	82	.550	2.15	112	70		48	2.2		
	30	441.2	83	.595	2.34	118	74		48	3.5		
	37.5	447.3	84	.685	2.708	121	78		48	4.0		
	45	453.65	84	.82	3.26	125	82		49	4.5		
	52.5	460.50	84	.885	3.55	129	85		50	5.1		
	60	468.10	84	.90	3.62	132	88		50	5.2		
	67.5	475.70	84	.89	3.59	133	90		51	5.2		
	1:15	483.4	84	.86	3.47	133	92		51	5.0		
	1:22.5	490.9	84	.67	2.70	133	93		50	4.2		
TOTAL	1:30	497.643										
AVERAGE												

0.013 CFM @ 6.5" Hg

TEST IS PARTICULATE FOR
60" UPSTREAM, 12" DOWNSTREAM
24" DIAMETER ROUND STACK
##########################
DEPTHS TO INSERT PROBES
****

POINT 1 = 1"

POINT 2 = 3 9/16"

POINT 3 = 7 1/16"

POINT 4 = 16 15/16"

POINT 5 = 20 7/16"

POINT 6 = 22"

VELOCITY TRAVERSE

--dP--	--SQRT dP--
0.450	0.671
0.520	0.721
0.590	0.768
0.675	0.822
0.730	0.854
0.805	0.897
0.920	0.959
0.985	0.992
1.020	1.010
1.050	1.025
1.050	1.025
0.990	0.995

dP RMS = 0.801

STATIC P
- 4.15

VELOCITY TRAVERSE

--dP--	--SQRT dP--
0.450	0.671
0.520	0.721
0.590	0.768
0.675	0.822
0.730	0.854
0.805	0.897
0.920	0.959
0.985	0.992
1.020	1.010
1.050	1.025
1.050	1.025
0.990	0.995

dP RMS = 0.801

```
*****
          XEQ "NOMO 2"
EPA METHOD
 NOMOGRAPH
PROGRAM

ENTER THE
FOLLOWING
DATA AS
REQUIRED.

PUSH R/S
AFTER
EACH DATA
ENTRY.

TEST
NUMBER=?
                1.    RUN

RUN NO. ?
                2.    RUN

FILTER
NUMBER=?
                1.    RUN

INITIAL
METER VOL
FT3=?
          419.274     RUN

STACK
STATIC
PRESSURE
/PS/
IN. H2O=?
            -4.15     RUN

BAROMETER
PRESSURE
/PB/
IN. HG=?
             29.9     RUN

% H2O=?
              6.1     RUN

SAMPLE RATE
/QM/
CFM=?
              .75     RUN

STACK GAS
MOL WT
/MW/
LB/LB MOL=?
            28.16     RUN

AVG STACK
TEMP /TS/
DEG F=?
            83.00     RUN

AVG DELTA
P=? IN. H2O
             .805     RUN
```

INLET
LINE 65

```
AMBIENT
TEMP F=?
          62.0000     RUN

PITOT TUBE
COEFF
CP=?
              .82     RUN

AVG STACK
VELOCITY
                3,042.486
FPM....

IDEAL
NOZZLE
DIAMETER
INCHES
                    0.225

ENTER THE
ACTUAL
NOZZLE
DIAMETER
TO BE USED
IN
INCHES...
             .244     RUN

DELTA H
AT=?
           2.0910     RUN
                    2.091

ENTER THE
FOLLOWING
FOR EACH
TRAVERSE
POINT
******
DP
IN. H2O=?
PUSH STO A

TS DEG F
PUSH STO B

TM DEGR F
PUSH STO C, R/S
***
AFTER LAST
DATA POINT PUSH
0, STO A, R/S
*******

             .320 STO 01
           60.000 STO 02
           69.000 STO 03
                      RUN
```

```
THE
FOLLOWING
IS GIVEN
FOR TRANSFER
TO THE
ISOKINETIC
PROGRAM 2
/FILE 5/

VELOCITY
PARAMETER
                   18.77
AVG METER
TEMP.
DEG F=
                    117.
AVG DELTA
H=  IN. H2O
                   2.653
AVG
DELTA P=
                   0.651

FINAL METER
VOLUME FT3=?
         497.643     RUN
                 497.643
INITIAL
METER VOL. FT3
                 419.274
ABSOLUTE
STACK PRES
PS IN. HG
                   29.59
AVG STACK TEMP
DEG F
                     80.
GEOMETRIC AVG
ABSOLUTE STACK
TEMP. DEG R
                 540.369
STANDARD
CONDITIONS ARE
29.92126 IN. HG
68.0 DEG F
******
END PROGRAM
```

```
                    CLX
          XEQ "ISOKIN2"
EPA METHOD
FIVE
ISOKINETIC
PROGRAM 2

ENTER DATA
FROM THE
NOMOGRAPH
PRGM.
AS REQUESTED

TEST NO.?
              1.    RUN
RUN NO.?
              2.    RUN
FILTER NO.?
                    RUN
VELOCITY
PARAMETER KV=?
          18.77     RUN
AVG METER
TEMP TM DEG F=?
           117.     RUN
DEG R =577.

AVG DELTA H
IN. H2O=?
          2.653     RUN
AVG DELTA P
IN. H2O=?
           .651     RUN
FINAL METER
VOL. FT3=?
        497.643     RUN
INITIAL METER
VOLUME FT3=?
        419.274     RUN
ABSOLUTE
STACK PRES.
IN. HG=?
         29.590     RUN
IS THE % H2O
KNOWN?

0 = YES
1 = NO
           1.00     RUN
WATER GAIN, G=?
          17.20     RUN
% CO2 =?
           0.00     RUN
%O2 =?
          20.90     RUN
%CO =?
           0.00     RUN
PITOT COEF CP=?
            .82     RUN
```

INLET

```
SAMPLE TIME
MIN =?
         90.000     RUN
NOZZLE
DIAMETER IN. =?
           .245     RUN
ROUND STACK?
1 = YES
0 = NO
          1.000     RUN
STACK DIA. IN.?
         24.000     RUN
AVG STACK TEMP
DEG F =?
           80.0     RUN
METER CALBRTN
FACTOR G =?
         1.0001     RUN
=======
NET METER
VOL. FT3=
                 78.377
CORRECTED
SAMPLE VOL.
VMSTD  SCF=
                 70.926
MOLE FRACTION
DRY GAS MD=
                  0.989
MOLECULAR WT
STACK GAS MW
LB/LB MOL=
                 28.713
AVG VELOCITY
FPM =?
               2,705.23
STACK AREA
AS SQ. IN.=
                  452.4
STACK DRY
FLOW QS  SCFM=
               8,121.98
ACFM
               8,402.56
EXCESS AIR %
              33,983.74
**********
ISOKINETIC %I=
                   93.1
*********
```

PARTICULATE SAMPLE BOX SET UP
CHECKLIST

TEST 1, INLET

DATE: 03/14/85
PLANT: Bldg 195
LOCATION: Portsmouth NSY
PREP. BY: C. Yee

RUN NO.: #3
STACK NO: LINE 65
SAMPLE BOX NO.: 7

( ) 1. Wash all glassware with distilled water and then acetone.

( ) 2. Place approx. 100 ml distilled water in the first impinger, a modified Greenburg-Smith with straight tube 1/2 inch from the impinger bottom. Record exact weight to 1/10 of a gram.

( ) 3. Place approx. 100 ml distilled water in the second impinger, a standard Greenburg-Smith impinger (caricell tip). Record exact weight to 1/10 of a gram.

( ) 4. Impinger three is a dry modified Greenburg-Smith with straight tube 1/2 inch from the impinger bottom. Record dry tare weight to 1/10 of a gram.

( ) 5. Place approx. 175 ml of silica gel in the fourth impinger, a modified Greenburg-Smith with straight tube 1/2 inch from the impinger bottom. Record exact weight to 1/10 of a gram.

Impinger No.	Impinger weights (GRAMS)	Impinger Tare	Impinger + substance Initial	Final	Condensate	
7-1	1. 100 ml	506.1	708.3	707.8	~~AP~~ -0.5	
7-2	2. 100 ml	492.0	693.8	696.4	2.6	
7-3	3. Dry	504.4		506.7	2.3	TOTAL
7-4	4. 175 g silica gel	471.3	651.8	668.8	17	21.4

( ) 8. Assemble impinger bottles and glass elbows so air flows from a small hole to a larger hole.

11ND-CBC-3360/47 (REV. 11-78)

SOURCE EMISSIONS TESTING DATA SHEET
11ND-CBC-3960/62 (Rev. 11-78)

PLANT: PLATING SHOP	LOCATION: NORFOLK	AMBIENT TEMPERATURE: 62	BAROMETRIC PRESSURE, IN HG: 29.92
OPERATOR: SENT/FOER	DATE: 03/14/85	ASSUMED MOISTURE, %: 1.1	HEATER BOX SETTING: N/A
RUN NO.: 3	SAMPLE BOX NO.: 7	PROBE # (PITOT #): 3.1	PROBE LENGTH, in.: 36
METER BOX NO.: —	METER ΔH@: 2.091	NOZZLE I.D. NO.: 1/4" TEFLON	NOZZLE DIAMETER, in.: .243
C FACTOR: (Nomograph)	PITOT COEFFICIENT, CP: 0.82	PROBE HEATER SETTING: N/A	PROBE LINER MATERIAL: GLASS
			LEAK RATE (CFM) @ " HG: 0.002 @ 21

SCHEMATIC OF STACK CROSS SECTION (Show Traverse Points)

TRAVERSE POINT NUMBER	SAMPLING TIME (θ) MIN	GAS METER READING (V_m) ft³	STACK TEMPERATURE (T_s) °F	VELOCITY HEAD (ΔP_s) In. H_2O	PRESSURE ACROSS ORIFICE (ΔH) In. H_2O	GAS SAMPLE TEMPERATURE AT DRY GAS METER: Inlet (T_{min}) °F	GAS SAMPLE TEMPERATURE AT DRY GAS METER: Outlet (T_{mout}) °F	SAMPLE BOX TEMPERATURE °F	TEMPERATURE IMPINGER °F	SAMPLE VACUUM in. Hg.	CO_2 %	O_2 %
0	0	496.~~[illegible]~~ 496.[illegible]	82	.289	1.15	71	63	35		2.8	0	20.9
1	7.5	502.7	82	.395/.42	1.62/1.7*	90	64	36		4.2		
2	15	507.8	83	.500	2.115	108	67	42		4.8		
3	22.5	513.55	84	.560	2.411	120	72	46		5.1		
4	30	519.00	84	.620	2.60	129	78	47		5.8		
5	37.5	527.20	84	.675	2.95	124	82	47		6.3		
6	45	532.70	84	.760	3.79	134	85	49		7.5		
7	52.5	537.80	84	.885	3.95	142	88	51		7.8		
8	1:00	548.4	84	.900	4.04	145	92	52		8.0		
9	1:07:30	556.3	84	.91	4.10	147	95	53		8.0		
10	1:15	564.4	83	.88	3.98	148	98	54		7.9		
11	1:22:30	572.4	82	.82	3.72	149	99	54		7.2		
12 TOTAL	1:30:00	580.345										
AVERAGE												

POST LEAK CHECK
0.017 @ 15

```
*******
                XEQ "NOMO 2"
EPA METHOD
5 NOMOGRAPH
PROGRAM

ENTER THE
FOLLOWING
DATA AS
REQUIRED.

PUSH R/S
AFTER
EACH DATA
ENTRY.

TEST
NUMBER=?
                1.    RUN

RUN NO. ?
                3.    RUN

FILTER
NUMBER=?
                3.    RUN

INITIAL
METER VOL
FT3=?
            498.618   RUN

STACK
STATIC
PRESSURE
/PS/
IN. H2O=?
              -4.35   RUN

BAROMETER
PRESSURE
/PB/
IN. HG=?
              29.92   RUN

% H2O=?
               1.1    RUN

SAMPLE RATE
/QM/
CFM=?
               .75    RUN

STACK GAS
MOL WT
/MW/
LB/LB MOL=?
             28.713   RUN

AVG STACK
TEMP /TS/
DEG F=?
             83.00    RUN

AVG DELTA
H=? IN. H2O
               .65    RUN
```

INLET LINE 63

```
AMBIENT
TEMP F=?
            65.0000   RUN

PITOT TUBE
COEFF
CP=?
               .82    RUN

AVG STACK
VELOCITY
                2,707.232
FPM....

IDEAL
NOZZLE
DIAMETER
INCHES
                  0.232

ENTER THE
ACTUAL
NOZZLE
DIAMETER
TO BE USED
ON
INCHES...
              .243    RUN

DELTA H
AT=?
            2.0910    RUN
                    2.091

ENTER THE
FOLLOWING
FOR EACH
TRAVERSE
POINT
******
DP
IN. H2O=?
PUSH STO A

TS DEG F
PUSH STO B

TM DEGR F
PUSH STO C, R/S
***
AFTER LAST
DATA POINT PUSH
0, STO A, R/S
*******

              .290 STO 01
            82.000 STO 02
            71.000 STO 03
                   RUN

THE
FOLLOWING
IS GIVEN
FOR TRANSFER
TO THE
ISOKINETIC
PROGRAM 2
/FILE 5/

VELOCITY
PARAMETER
                 19.16
AVG METER
TEMP.
DEG F=
                  126.
AVG DELTA
H=  IN. H2O
                 3.851
AVG
DELTA P=
                 0.676

FINAL METER
VOLUME FT3=?
          580.345   RUN
                580.345
INITIAL
METER VOL. FT3
                498.618
ABSOLUTE
STACK PRES
PS IN. HG
                 29.60
AVG STACK TEMP
DEG F
                   83.
GEOMETRIC AVG
ABSOLUTE STACK
TEMP. DEG R
                543.333
STANDARD
CONDITIONS ARE
29.92126 IN. HG
68.0 DEG F
******
END PROGRAM
```

```
XEQ "ISOKIN2"
EPA METHOD
FIVE
ISOKINETIC
PROGRAM 2

ENTER DATA
FROM THE
NOMOGRAPH
PROM.
AS REQUESTED

TEST NO.?
                1.    RUN
RUN NO.?
                3.    RUN
FILTER NO.?
                1.    RUN
VELOCITY
PARAMETER KV=?
            19.16     RUN
AVG METER
TEMP TM DEG F=?
             126.     RUN
DEG R =586.

AVG DELTA H
IN. H2O=?
            3.051     RUN
AVG DELTA P
IN. H2O=?
            6.000     CLX
             .676     RUN
FINAL METER
VOL. FT3=?
          580.345     RUN
INITIAL METER
VOLUME FT3=?
          498.618     RUN
ABSOLUTE
STACK PRES.
IN. HG=?
           29.600     RUN
IS THE % H2O
KNOWN?

0 = YES
1 = NO
             1.00     RUN
WATER GAIN, G=?
            21.40     RUN
% CO2 =?
             0.00     RUN
%O2 =?
            20.90     RUN
%CO =?
             0.00     RUN
PITOT COEF CP=?
            8.00      CLX
             .82      RUN
SAMPLE TIME
MIN =?
           90.000     RUN
NOZZLE
DIAMETER IN. =?
             .243     RUN.
ROUND STACK?
1 = YES
0 = NO
            1.000     RUN
STACK DIA. IN.?
           24.000     RUN
AVG STACK TEMP
DEG F =?
             83.0     RUN
METER CALBRTN
FACTOR G =?
          1.0001      RUN
=======
NET METER
VOL. FT3=
                 81.735
CORRECTED
SAMPLE VOL.
VMSTD  SCF=
                 72.853
MOLE FRACTION
DRY GAS MD=
                  0.986
MOLECULAR WT
STACK GAS MW
LB/LB MOL=
                 28.680
AVG VELOCITY
FPM =?
               2,762.21
STACK AREA
AS SQ. IN.=
                  452.4
STACK DRY
FLOW QS  SCFM=
               8,230.31
ACFM
               8,559.06
EXCESS AIR %
              33,983.74
**********
ISOKINETIC %I=
                   95.9
*********


SORRY. YOU BLEW
IT, SCREWBALL,
BETTER LUCK
NEXT TIME.

STANDARD
CONDITIONS ARE
29.92126 IN. HG
68.0 DEG F


TO RUN THIS
PROGRAM AGAIN
```

PARTICULATE SAMPLE BOX SET UP

CHECKLIST

DATE: _____

PLANT: Bldg 195

LOCATION: Portsmouth NSY

PREP. BY: C. Yee

TEST 1, OUTLET

RUN NO.: 1

STACK NO: LINE 65

SAMPLE BOX NO.: 6

( ) 1. Wash all glassware with distilled water and then acetone.

( ) 2. Place approx. 100 ml distilled water in the first impinger, a modified Greenburg-Smith with straight tube 1/2 inch from the impinger bottom. Record exact weight to 1/10 of a gram.

( ) 3. Place approx. 100 ml distilled water in the second impinger, a standard Greenburg-Smith impinger (caricell tip). Record exact weight to 1/10 of a gram.

( ) 4. Impinger three is a dry modified Greenburg-Smith with straight tube 1/2 inch from the impinger bottom. Record dry tare weight to 1/10 of a gram.

( ) 5. Place approx. 175 ml of silica gel in the fourth impinger, a modified Greenburg-Smith with straight tube 1/2 inch from the impinger bottom. Record exact weight to 1/10 of a gram.

( ) 6. PLACE TARED FILTER INTO FILTER HOLDER ON THE CYCLONE SIDE OF THE HOLDER. Smooth side of filter is to face frittered glass of filter holder. Record filter number and weight.

Impinger No.	Impinger weights (GRAMS)	Tare	Initial	Final	Condensate	
6-1	1. 200 ml	502.6	701.3	701.3	0	
6-2	2. 200 ml 0.1N KOH	504.8	706.0	708.5	2.5	
6-3	3. Dry	484.0	—	501.3	17.3	TOTAL
6-4	4. 175 g silica gel	480.7	660.7	671.5	10.8	30.6

Filter No	Tare	Final	Net	
				TOTAL

( ) 7. Assemble flask, cyclone, and filter holder.

( ) 8. Assemble impinger bottles and glass elbows so air flows from a small hole to a larger hole.

11ND-CBC-3960/47 (REV. 11-78)

TEST 1
OUTLET

VP pitot = passed
ST pitot = passed
PRETEST LEAK CHECK
@ Nozzle = 0.003 @ 5"

SOURCE EMISSIONS TESTING DATA SHEET
11ND-CBC-3960/62 (Rev. 11-78)

PLANT: B195	LOCATION: NNSY		AMBIENT TEMPERATURE: 57	BAROMETRIC PRESSURE, IN HG: 29.89
OPERATOR: SUZ/SAN	DATE: 13 MAR 85		ASSUMED MOISTURE, %: 1.5	HEATER BOX SETTING: N.A.
RUN NO.: 1	SAMPLE BOX NO.: 6		PROBE # (PITOT #): 1 (1)	PROBE LENGTH, in.: 36
METER BOX NO.: 2	METER ΔH@ γ = .9987: 1.8168		NOZZLE I.D. NO.: 14	NOZZLE DIAMETER, in.: .237
C FACTOR (Nomograph):	PITOT COEFFICIENT, CP: .83	SCHEMATIC OF STACK CROSS SECTION (Show Traverse Points)	PROBE HEATER SETTING: N.A.	PROBE LINER MATERIAL: glass/quartz glass	LEAK RATE (CFM) @ " HG: .002 @ 20

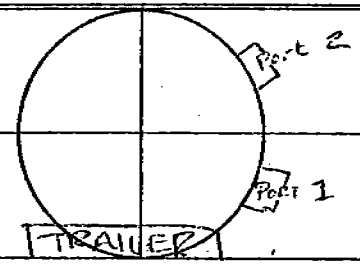

TRAVERSE POINT NUMBER	SAMPLING TIME (θ) MIN	GAS METER READING (V_m) ft3	STACK TEMPERATURE (T_s) °F	VELOCITY HEAD (ΔP_s) In. H_2O	PRESSURE ACROSS ORIFICE (ΔH) In. H_2O	GAS SAMPLE TEMPERATURE AT DRY GAS METER Inlet (T min) °F.	Outlet (T mout) °F.	SAMPLE BOX TEMPERATURE °F	TEMPERATURE IMPINGER °F	SAMPLE VACUUM in. Hg.	CO_2 %	O_2 %
Port 2-1	22:21 / 0	471.454	61	.59	1.920	65	65	/	51	3.5	0	20.9
2	6	476.—	78	.62	2.02	69	64	/	38	3.5		
3	12	480.74	82	.71	2.27	77	66	/	41	4.0		
4	18	485.88	84	.95	3.06	88	68	/	42	5.0		
5	24	491.67	84	.99	3.22	89	71	/	42	5.0		
6	30	497.75	84	1.05	3.44	95	73	/	43	5.5		
Port 1-1	24 / 36	504.066	84	.47	1.54	95	75	/	38	5.0		
2	42	508.3	73	.57	1.87	86	76	/	36	5.0		
3	48	513.07	82	.60	2.20	90	77	/	39	5.0		
4	54	518.134	84	.85	2.78	94	78	/	40	5.0		
5	60	523.8	84	.91	2.99	97	79	/	41	6.0		
6	66	529.52	84	.94	3.01	99	81	/	42	6.0		
TOTAL	72	535.686										
AVERAGE												

Post Test VP = passed
ST = passed
@ Nozzle = 0.002" @ 20" Hg.

```
EPA METHOD
5 NOMOGRAPH
PROGRAM

ENTER THE
FOLLOWING
DATA AS
REQUIRED.

PUSH R/S
AFTER
EACH DATA
ENTRY.

TEST
NUMBER=?
          1.000    RUN

RUN NO. ?
          1.000    RUN

FILTER
NUMBER=?
                   RUN

INITIAL
METER VOL
FT3=?
        471.454    RUN
STACK
STATIC
PRESSURE
/PS/
IN. H2O=?
         -6.300    RUN
BAROMETER
PRESSURE
/PB/
IN. HG=?
         29.890    RUN
% H2O=?
          1.500    RUN
SAMPLE RATE
/QM/
CFM=?
           .750    RUN
STACK GAS
MOL WT
/MW/
LB/LB MOL=?
         28.00     RUN

AVG STACK
TEMP /TS/
DEG F=?
         57.00     RUN

AVG DELTA
P=? IN. H2O
           .815    RUN
```

OUTLET
LINE 65

```
AMBIENT
TEMP F=?
        57.0000    RUN

PITOT TUBE
COEFF
CP=?
            .83    RUN

AVG STACK
VELOCITY
            3,040.827
FPM....

IDEAL
NOZZLE
DIAMETER
INCHES
                   0.216

ENTER THE
ACTUAL
NOZZLE
DIAMETER
TO BE USED
DN
INCHES...
           .237    RUN
DELTA H
AT=?
        1.8168     RUN
                   1.817

ENTER THE
FOLLOWING
FOR EACH
TRAVERSE
POINT
******
DP
IN. H2O=?
PUSH STO A

TS DEG F
PUSH STO B

TM DEGR F
PUSH STO C, R/S
***
AFTER LAST
DATA POINT PUSH
0, STO A, R/S
*******

          .590 STO 01
        61.000 STO 02
        65.000 STO 03
                   RUN
```

```
THE
FOLLOWING
IS GIVEN
FOR TRANSFER
TO THE
ISOKINETIC
PROGRAM 2
/FILE 5/

VELOCITY
PARAMETER
                  20.35
AVG METER
TEMP.
DEG F=
                    85.
AVG DELTA
H=  IN. H2O
                  2.533
AVG
DELTA P=
                  0.768

FINAL METER
VOLUME FT3=?
        535.686    RUN
                 535.686
INITIAL
METER VOL. FT3
                 471.454
ABSOLUTE
STACK PRES
PS IN. HG
                  29.43
AVG STACK TEMP
DEG F
                    79.
GEOMETRIC AVG
ABSOLUTE STACK
TEMP. DEG R
                 538.608
STANDARD
CONDITIONS ARE
29.92126 IN. HG
68.0 DEG F
******
END PROGRAM
```

```
                    CLX
          XEQ "ISOKIN2"
EPA METHOD
FIVE
ISOKINETIC
PROGRAM 2

ENTER DATA
FROM THE
NOMOGRAPH
PRGM.
AS REQUESTED

TEST NO.?
              1.    RUN
RUN NO.?
              1.    RUN
FILTER NO.?
                    RUN
VELOCITY
PARAMETER KV=?
              0.    CLX
          20.35     RUN
AVG METER
TEMP TM DEG F=?
             85.    RUN
DEG R =545.

AVG DELTA H
IN. H2O=?
          2.533     RUN
AVG DELTA P
IN. H2O=?
           .768     RUN
FINAL METER
VOL. FT3=?
        535.686     RUN
INITIAL METER
VOLUME FT3=?
        471.454     RUN
ABSOLUTE
STACK PRES.
IN. HG=?
         29.430     RUN
IS THE % H2O
KNOWN?

0 = YES
1 = NO
           1.00     RUN
WATER GAIN, G=?
          30.60     RUN
% CO2 =?
           0.00     RUN
%O2 =?
          20.90     RUN
%CO =?
           0.00     RUN
PITOT COEF CP=?
            .83     RUN
```

OUTLET

```
SAMPLE TIME
MIN =?
         72.000     RUN
NOZZLE
DIAMETER IN. =?
           .237     RUN
ROUND STACK?
1 = YES
0 = NO
          1.000     RUN
STACK DIA. IN.?
         24.000     RUN
AVG STACK TEMP
DEG F =?
           79.0     RUN
METER CALBRTN
FACTOR G =?
          .9987     RUN
=======
NET METER
VOL. FT3=
                 64.148
CORRECTED
SAMPLE VOL.
VMSTD  SCF=
                 61.126
MOLE FRACTION
DRY GAS MD=
                  0.977
MOLECULAR WT
STACK GAS MW
LB/LB MOL=
                 28.586
AVG VELOCITY
FPM =?
               2,983.41
STACK AREA
AS SQ. IN.=
                  452.4
STACK DRY
FLOW QS  SCFM=
               8,819.02
ACFM
               9,156.31
EXCESS AIR %
              33,983.74
**********
ISOKINETIC %I=
                   98.7
*********
```

PARTICULATE SAMPLE BOX SET UP

CHECKLIST

DATE: 14 MAR 85

PLANT: Bldg 105

LOCATION: Portsmouth, NSY

PREP. BY: C. Yee

TEST 1, OUTLET

RUN NO.: 2

STACK NO: LNE 65

SAMPLE BOX NO.: 1

( ) 1. Wash all glassware with distilled water and then acetone.

( ) 2. Place approx. 100 ml distilled water in the first impinger, a modified Greenburg-Smith with straight tube 1/2 inch from the impinger bottom. Record exact weight to 1/10 of a gram.

( ) 3. Place approx. 100 ml distilled water in the second impinger, a standard Greenburg-Smith impinger (caricell tip). Record exact weight to 1/10 of a gram.

( ) 4. Impinger three is a dry modified Greenburg-Smith with straight tube 1/2 inch from the impinger bottom. Record dry tare weight to 1/10 of a gram.

( ) 5. Place approx. 175 ml of silica gel in the fourth impinger, a modified Greenburg-Smith with straight tube 1/2 inch from the impinger bottom. Record exact weight to 1/10 of a gram.

( ) 6. PLACE TARED FILTER INTO FILTER HOLDER ON THE CYCLONE SIDE OF THE HOLDER. Smooth side of filter is to face frittered glass of filter holder. Record filter number and weight.

Impinger No.	Impinger weights (GRAMS)	Tare	Initial	Final	Condensate	
1-1	1. 200 ml	481.6	683.6	660.7	-22.9	
1-2	2. 200 ml 0.1N KOH	524.2	725.4	744.4	19.0	
1-3	3. Dry	513.3		519.2	5.9	TOTAL
1-4	4. 175 g silica gel	524.4	701.5	715.8	14.3	16.3

Filter No	Tare	Final	Net	
				TOTAL

( ) 7. Assemble flask, cyclone, and filter holder.

( ) 8. Assemble impinger bottles and glass elbows so air flows from a small hole to a larger hole.

11ND-CBC-3960/47 (REV. 11-78)

TEST 1, OUTLET
LINE 65

SOURCE EMISSIONS TESTING DATA SHEET
11ND-CBC-3960/62 (Rev. 11-78)

Pretest Leak Checks
C Nozzle = 0.001 @ 2" Hg
VP = passed
3P = passed

PLANT: B195	LOCATION: NNSY		AMBIENT TEMPERATURE: 50	BAROMETRIC PRESSURE, IN HG: 29.90
OPERATOR: SUZ/SAN	DATE: 14 MAR 85		ASSUMED MOISTURE, %: 2.3	HEATER BOX SETTING: /
RUN NO.: 2	SAMPLE BOX NO.: 1		PROBE # (PITOT #): 1 (1)	PROBE LENGTH, in.: 36
METER BOX NO.: 2	METER ΔH@: 1.8168 γ=.9981		NOZZLE I.D. NO.: 14	NOZZLE DIAMETER, in.: 0.239
C FACTOR (Nomograph): /	PITOT COEFFICIENT, CP: .83	SCHEMATIC OF STACK CROSS SECTION (Show Traverse Points)	PROBE HEATER SETTING: /	PROBE LINER MATERIAL: Glass / LEAK RATE (CFM) @ " HG: 0.005 @ 20"

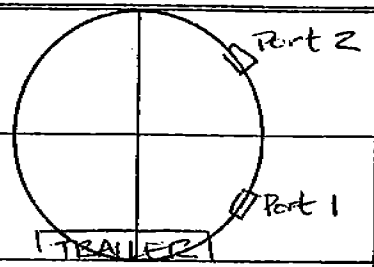

TRAVERSE POINT NUMBER	SAMPLING TIME (e) MIN	GAS METER READING (V_m) ft3	STACK TEMPERATURE (T_s) °F	VELOCITY HEAD (ΔP_s) In. H_2O	PRESSURE ACROSS ORIFICE (ΔH) In. H_2O	GAS SAMPLE TEMPERATURE AT DRY GAS METER Inlet (T min) °F	Outlet (T mout) °F	SAMPLE BOX TEMPERATURE °F	TEMPERATURE IMPINGER °F	SAMPLE VACUUM in. Hg.	CO_2 %	O_2 %	CO %
PORT 1 1	0 (2:05)	536.277 ~~536.126~~	57	.48	1.595	66	66	/	48	6.5	0	20.9	0
2	7½	541.47	57	.66	2.231	75	66	/	36	8.0			
3	15	547.69	79	.83	2.751	87	69	/	39	10.0			
4	22½	554.61	82	.98	3.278	95	72	/	41	11.0			
5	30	562.12	82	.99	3.353	102	76	/	42	11.5			
6	37½	569.85	83	.97	3.302	106	79	/	42	12.5			
PORT 2 1	45 (5:03)	577.553	57	.57	1.980	90	81	/	39	8.5			
2	52½	583.53	57	.67	2.370	100	82	/	39	10.0			
3	60	590.02 ~~589.~~	80	.75	2.567	107	83	/	40	11.5			
4	67½	597.10	82	.97	3.330	111	85	/	40	13.5			
5	75	604.89	82	1.00	3.465	115	87	/	41	14.0			
6	82½	612.79	82	1.05	3.651	117	89	/	42	14.5			
TOTAL	90	620.980											
AVERAGE													

Post Test Leak Checks
C [illegible] 4" [illegible] 15"
VP = passed
3P = passed

95.

******

XEQ "NOMO 2"
RUN

EPA METHOD
5 NOMOGRAPH
PROGRAM

ENTER THE
FOLLOWING
DATA AS
REQUIRED.

OUTLET
LINE G5

PUSH R/S
AFTER
EACH DATA
ENTRY.

TEST
NUMBER=?
1 RUN

RUN NO. ?
2. RUN

FILTER
RUN

NUMBER=?
RUN

INITIAL
METER VOL
FT3=?
536.12 RUN

STACK
STATIC
PRESSURE
/PS/
IN. H20=?
-6.3 RUN

BAROMETER
PRESSURE
/PB/
IN. HG=?
29.9 RUN

% H20=?
2.3 RUN

SAMPLE RATE
/QM/
CFM=?
.75 RUN

STACK GAS
MOL WT
/MW/
LB/LB MOL=?
28.586 RUN

AVG STACK
TEMP /TS/
DEG F=?
79.00 RUN

AVG DELTA
P=? IN. H20
.763 RUN

AMBIENT
TEMP F=?
50.0000 RUN

PITOT TUBE
COEFF
CP=?
.83 RUN

AVG STACK
VELOCITY
2,982.447
FPM....

IDEAL
NOZZLE
DIAMETER
INCHES
0.225

ENTER THE
ACTUAL
NOZZLE
DIAMETER
TO BE USED
ON
INCHES...
.239 RUN

DELTA H
AT=?
1.8166 RUN
1.817

ENTER THE
FOLLOWING
FOR EACH
TRAVERSE
POINT
******
DP
IN. H20=?
PUSH STO A

TS DEG F
PUSH STO B

TM DEGR F
PUSH STO C, R/S
***
AFTER LAST
DATA POINT PUSH
0, STO A, R/S
****

THE
FOLLOWING
IS GIVEN
FOR TRANSFER
TO THE
ISOKINETIC
PROGRAM 2
/FILE 5/

VELOCITY
PARAMETER
20.89

AVG METER
TEMP.
DEG F=
98.

AVG DELTA
H= IN. H20
2.823

AVG
DELTA P=
0.615

FINAL METER
VOLUME FT3=?
620.980 RUN
620.980

INITIAL
METER VOL. FT3
536.120

ABSOLUTE
STACK PRES
PS IN. HG
29.44

AVG STACK TEMP
DEG F
73.

GEOMETRIC AVG
ABSOLUTE STACK
TEMP. DEG R
533.288

STANDARD
CONDITIONS ARE
29.92126 IN. HG
68.0 DEG F

```
                    CLY
          XEQ "ISOKIN2"
EPA METHOD
FIVE
ISOKINETIC
PROGRAM 2

ENTER DATA
FROM THE
NOMOGRAPH
PRGM.
AS REQUESTED

TEST NO.?
              1.    RUN
RUN NO.?
              2.    RUN
FILTER NO.?
                    RUN
VELOCITY
PARAMETER KV=?
          28.88     RUN
AVG METER
TEMP TM DEG F=?
            98.     RUN
DEG R =558.

AVG DELTA H
IN. H2O=?
          2.823     RUN
AVG DELTA P
IN. H2O=?
           .815     RUN
FINAL METER
VOL. FT3=?
        620.980     RUN
INITIAL METER
VOLUME FT3=?
        536.120     RUN
ABSOLUTE
STACK PRES.
IN. HG=?
         29.440     RUN
IS THE % H2O
KNOWN?

0 = YES
1 = NO
           1.00     RUN
WATER GAIN, G=?
          16.30     RUN
% CO2 =?
           0.00     RUN
%O2 =?
          20.90     RUN
%CO =?
           0.00     RUN
PITOT COEF CP=?
            .83     RUN
```

OUTLET

```
SAMPLE TIME
MIN =?
          90.000    RUN
NOZZLE
DIAMETER IN. =?
            .239    RUN
ROUND STACK?
1 = YES
0 = NO
           1.000    RUN
STACK DIA. IN.?
          24.000    RUN
AVG STACK TEMP
DEG F =?
            73.0    RUN
METER CALBRTN
FACTOR G =?
          .9987     RUN
=======
NET METER
VOL. FT3=
                 84.750
CORRECTED
SAMPLE VOL.
VMSTD  SCF=
                 78.962
MOLE FRACTION
DRY GAS MD=
                  0.990
MOLECULAR WT
STACK GAS MW
LB/LB MOL=
                 28.731
AVG VELOCITY
FPM =?
               3,052.83
STACK AREA
AS SQ. IN.=
                  452.4
STACK DRY
FLOW QS  SCFM=
               9,254.39
ACFM
               9,498.14
EXCESS AIR %
              33,983.74
**********
ISOKINETIC %I=
                   95.5
*********
```

PARTICULATE SAMPLE BOX SET UP
CHECKLIST

DATE: _____
PLANT: Bldg 195
LOCATION: Portsmouth NSY
PREP. BY: C. Yee

TEST 1, OUTLET
RUN NO.: 3
STACK NO: LINE 65
SAMPLE BOX NO.: 6

( ) 1. Wash all glassware with distilled water and then acetone.

( ) 2. Place approx. 100 ml distilled water in the first impinger, a modified Greenburg-Smith with straight tube 1/2 inch from the impinger bottom. Record exact weight to 1/10 of a gram.

( ) 3. Place approx. 100 ml distilled water in the second impinger, a standard Greenburg-Smith impinger (caricell tip). Record exact weight to 1/10 of a gram.

( ) 4. Impinger three is a dry modified Greenburg-Smith with straight tube 1/2 inch from the impinger bottom. Record dry tare weight to 1/10 of a gram.

( ) 5. Place approx. 175 ml of silica gel in the fourth impinger, a modified Greenburg-Smith with straight tube 1/2 inch from the impinger bottom. Record exact weight to 1/10 of a gram.

Impinger No.	Impinger weights (GRAMS)	Impinger Tare	Impinger + substance Initial	Final	Condensate	
6-1	1. 200 ml H_2O	502.7	705.6	796.6	91.0	
6-2	2. 200 ml 0.1N KOH	504.9	706.7	605.8	-100.9	
6-3	3. Dry	484.0		489.1	5.1	TOTAL
6-4	4. 175 g silica gel	480.8	660.1	673.2	13.1	8.3

( ) 8. Assemble impinger bottles and glass elbows so air flows from a small hole to a larger hole.

11ND-CBC-3960/47 (REV. 11-78)

SOURCE EMISSIONS TESTING DATA SHEET
1100-CEC-3960/62 (Rev. 11-78)

PLANT: B195	LOCATION: NNSY		AMBIENT TEMPERATURE: 47°F
OPERATOR: R.W.S/SUZ	DATE: 14 MARCH 85		ASSUMED MOISTURE, %: 2.3
RUN NO.: 3	SAMPLE BOX NO.: —		PROBE # (PITOT #): 1 (1)
METER BOX NO.: 2	METER ΔH@: 1.8168 γ=0.9987		NOZZLE I.D. NO.: 14
C FACTOR (Nomograph): —	PITOT COEFFICIENT, CP: .83		PROBE HEATER SETTING: —

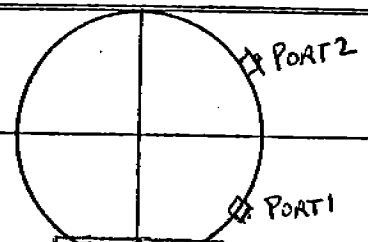

SCHEMATIC OF STACK CROSS SECTION (Show Traverse Points)

BAROMETRIC PRESSURE, IN HG: BEFORE 29.93 ~~AFTER~~	HEATER BOX SETTING: —		
PROBE LENGTH, in.: 36"	PROBE LINER MATERIAL: GLASS	LEAK RATE (CFM) @ " HG: 0.014 @ 21.5	
NOZZLE DIAMETER, in.: 0.240			

TRAVERSE POINT NUMBER	SAMPLING TIME (θ) MIN	GAS METER READING (V_m) ft3	STACK TEMPERATURE (T_s) °F	VELOCITY HEAD (ΔP_s) In. H_2O	PRESSURE ACROSS ORIFICE (ΔH) In. H_2O	GAS SAMPLE TEMPERATURE AT DRY GAS METER: Inlet (T min) °F	GAS SAMPLE TEMPERATURE AT DRY GAS METER: Outlet (T mout) °F	SAMPLE BOX TEMPERATURE °F	TEMPERATURE IMPINGER °F	SAMPLE VACUUM in. Hg.	CO_2 %	O_2 %
PORT 2 1	0 (B:30)	623.716	57	.40	1.399	72	67	—	36	4.0	0	20.9
2	7.5	629.70	79	.61	2.096	79	68	—	39	4.5	0	20.9
3	15	636.30	81	.70	2.419	87	70	—	41	5.0	"	"
4	22.5	642.00	82	.90	3.133	92	73	—	43	6.0	"	"
5	30	649.50	82	.96	3.372	96	76	—	44	6.2	"	"
6	37.5	657.10	82	.97	3.425	99	78	—	45	6.5	"	"
PORT 1 1	45	664.525	57	.40	1.441	83	77	—	47	5.0	"	"
2	52.5	669.90	77	.55	1.947	89	78	—	40	5.5	"	"
3	60	676.30	82	.76	2.655	93	78	—	42	6.2	"	"
4	67.5	682.8	82	.92	3.231	97	79	—	44	6.8	"	"
5	75	690.3	82	.91	3.213	100	81	—	45	6.8	"	"
6	82.5	698.1	82	.90	3.184	101	82	—	47	6.8	"	"
TOTAL	90	705.6625						—			"	"
AVERAGE								—			"	"

```
                    CLX
          XEQ "NOMO 2"
                    RUN

EPA METHOD
5 NOMOGRAPH
PROGRAM

                OUTLET
                LINE 63

ENTER THE
FOLLOWING
DATA AS
REQUIRED.

PUSH R/S
AFTER
EACH DATA
ENTRY.

TEST
NUMBER=?
          1.000     RUN

RUN NO. 2
          3.000     RUN

FILTER
NUMBER=?
                    RUN

INITIAL
METER VOL
FT3=?
        623.716     RUN

STACK
STATIC
PRESSURE
/PS/
IN. H2O=?
          6.100     RUN

BAROMETER
PRESSURE
/PB/
IN. HG=?
         29.930     RUN

% H2O=?
          2.300     RUN

SAMPLE RATE
/QM/
CFM=?
           .750     RUN

STACK GAS
MOL WT
/MW/
LB/LB MOL=?
          28.59     RUN

AVG STACK
TEMP /TS/
DEG F=?
          73.00     RUN
```

```
AVG DELTA
P=? IN. H2O
           .768     RUN

AMBIENT
TEMP F=?
        47.0000     RUN

PITOT TUBE
COEFF
CP=?
           .83      RUN

AVG STACK
VELOCITY
                2,919.263
FPM....

IDEAL
NOZZLE
DIAMETER
INCHES
                    0.223

ENTER THE
ACTUAL
NOZZLE
DIAMETER
TO BE USED
ON
INCHES...
           .240     RUN

DELTA H
AT=?
        1.8168      RUN
                    1.817

ENTER THE
FOLLOWING
FOR EACH
TRAVERSE
POINT
******
DP
IN. H2O=?
PUSH STO A

TS DEG F
PUSH STO B

TM DEGR F
PUSH STO C, R/S
***
AFTER LAST
DATA POINT PUSH
0, STO A, R/S
*******

          .400 STO 01
        57.000 STO 02
        68.000 STO 03
                    RUN
```

```
THE
FOLLOWING
IS GIVEN
FOR TRANSFER
TO THE
ISOKINETIC
PROGRAM 2
/FILE 5/

VELOCITY
PARAMETER
                   19.85

AVG METER
TEMP.
DEG F=
                    98.

AVG DELTA
H=  IN. H2O
                  2.626

AVG
DELTA P=
                  0.733

FINAL METER
VOLUME FT3=?
      705.6625      RUN
                705.663

INITIAL
METER VOL. FT3
                623.716

ABSOLUTE
STACK PRES
PS IN. HG
                   30.35

AVG STACK TEMP
DEG F
                    76.

GEOMETRIC AVG
ABSOLUTE STACK
TEMP. DEG R
                536.249

STANDARD
CONDITIONS ARE
29.92126 IN. HG
68.0 DEG F
******
END PROGRAM
```

```
                    CLX
          XEQ "ISOKIN2"
EPA METHOD
FIVE
ISOKINETIC
PROGRAM 2

ENTER DATA
FROM THE
NOMOGRAPH
PRGM.
AS REQUESTED

TEST NO.?
                1.    RUN
RUN NO.?
                3.    RUN
FILTER NO.?
                      RUN
VELOCITY
PARAMETER KV=?
            19.85     RUN
AVG METER
TEMP TM DEG F=?
               90.    RUN
DEG R =550.

AVG DELTA H
IN. H2O=?
            2.626     RUN
AVG DELTA P
IN. H2O=?
             .733     RUN
FINAL METER
VOL. FT3=?
         705.6625     RUN
INITIAL METER
VOLUME FT3=?
          623.716     RUN
ABSOLUTE
STACK PRES.
IN. HG=?
           30.380     RUN
IS THE % H2O
KNOWN?

0 = YES
1 = NO
            1.00      RUN
WATER GAIN, G=?
            8.30      RUN
% CO2 =?
            0.00      RUN
%O2 =?
           20.90      RUN
%CO =?
            0.00      RUN
PITOT COEF CP=?
             .83      RUN
```

OUTLET

```
SAMPLE TIME
MIN =?
           90.000     RUN
NOZZLE
DIAMETER IN. =?
             .240     RUN
ROUND STACK?
1 = YES
0 = NO
            1.000     RUN
STACK DIA. IN.?
           24.000     RUN
AVG STACK TEMP
DEG F =?
             76.0     RUN
METER CALBRTN
FACTOR G =?
            .9987     RUN
=======
NET METER
VOL. FT3=
                 81.840
CORRECTED
SAMPLE VOL.
VMSTD  SCF=
                 79.769
MOLE FRACTION
DRY GAS MD=
                  0.995
MOLECULAR WT
STACK GAS MW
LB/LB MOL=
                 28.783
AVG VELOCITY
FPM =?
              2,854.42
STACK AREA
AS SQ. IN.=
                  452.4
STACK DRY
FLOW QS  SCFM=
              8,921.98
ACFM
              8,923.60
EXCESS AIR %
             33,983.74
**********
ISOKINETIC %I=
                   99.3
*********
```

PARTICULATE SAMPLE BOX SET UP
CHECKLIST

DATE: _____

PLANT: Bldg 195

LOCATION: Portsmouth NSY

PREP. BY: C. Yee

RUN NO.: TEST 2 RUN 2 INLET

STACK NO: LINE E

SAMPLE BOX NO.: 6

( ) 1. Wash all glassware with distilled water and then acetone.

( ) 2. Place approx. 100 ml distilled water in the first impinger, a modified Greenburg-Smith with straight tube 1/2 inch from the impinger bottom. Record exact weight to 1/10 of a gram.

( ) 3. Place approx. 100 ml distilled water in the second impinger, a standard Greenburg-Smith impinger (caricell tip). Record exact weight to 1/10 of a gram.

( ) 4. Impinger three is a dry modified Greenburg-Smith with straight tube 1/2 inch from the impinger bottom. Record dry tare weight to 1/10 of a gram.

( ) 5. Place approx. 175 ml of silica gel in the fourth impinger, a modified Greenburg-Smith with straight tube 1/2 inch from the impinger bottom. Record exact weight to 1/10 of a gram.

Impinger No.	Impinger weights (GRAMS)	Impinger Tare	Impinger + substance Initial	Final	Condensate	
6-1	1. 200 ml H_2O	502.6	707.0	724.1	17.1	
6-2	2. 200 ml 0.1N KOH	505.0	706.8	689.4	~~85.6~~ -17.4	
6-3	3. Dry	484.0		484.8	0.8	TOTAL
6-4	4. 175 g silica gel		679.3	687.3	8.0	8.5g

( ) 8. Assemble impinger bottles and glass elbows so air flows from a small hole to a larger hole.

11ND-CBC-3960/47 (REV. 11-78)

SOURCE EMISSIONS TESTING DATA SHEET
11ND-CBC-3960/62 (Rev. 11-78)

636.98

PLANT: NORFOLK NSY	LOCATION	AMBIENT TEMPERATURE: 51°	BAROMETRIC PRESSURE, IN HG: 30.11
OPERATOR: SENTENO/FOERESTER	DATE: MARCH 15, 85	ASSUMED MOISTURE, %:	HEATER BOX SETTING: ✓
RUN NO.:	SAMPLE BOX NO.:	PROBE # (PITOT #): 3-1	PROBE LENGTH, in.: 36"
METER BOX NO.: 3	METER ΔH@: 2.091	NOZZLE I.D. NO.: 1/4" TEFLON	NOZZLE DIAMETER, in.: .243
C FACTOR (Nomograph):	PITOT COEFFICIENT, CP: 0.82	PROBE HEATER SETTING:	PROBE LINER MATERIAL: GLASS
	SCHEMATIC OF STACK CROSS SECTION (Show Traverse Points)		LEAK RATE (CFM) @ " HG: .012 @ 20"

	TRAVERSE POINT NUMBER	SAMPLING TIME (e) MIN	GAS METER READING (V_m) ft3	① STACK TEMPERATURE (T_s) °F	VELOCITY HEAD (ΔP_s) In. H_2O	PRESSURE ACROSS ORIFICE (ΔH) In. H_2O	② GAS SAMPLE TEMPERATURE AT DRY GAS METER Inlet (T min) °F	Outlet (T mout) °F	~~SAMPLE BOX~~ AMBIENT TEMPERATURE °F	④ TEMPERATURE IMPINGER °F	SAMPLE VACUUM in. Hg.	CO_2 %	O_2 %
	#1	10 min 12 points	636.98	80	.615	2.451	81	73		38	3.8		
Port 2	#2	8:08:15 pm	640.95	81	.94	3.896	98	73		37	4.2		
	#3	8:14:15 pm	646.57	81	.97	4.129	113	74		39	4.99		
	#4	8:20:15 pm	652.72	81	.85	3.694	125	77		41	4.2		
	#1	8:28:45 pm	658.85	76	.685	2.948	114	80		43	3.5		
Port 2	#2	8:34:45 pm	663.62	82	1.05	4.539	123	82		41	5		
	#3	8:40:45 pm	670.15	82	1.05	4.617	133	85	51°	42	5		
	#4	8:46:45 pm	676.74	82	1.0	4.434	138	88	47	43	5		
	#1	8:55:00 pm	683.42	80	.67	2.917	125	89	47	43	3.9		
Port 3	#2	9:01:00 pm	688.75	82	.985	4.302	129	90	47	42	4.9		
	#3	9:07:00 pm	695.16	82	1.0	4.419	136	91	47	43	5		
	#4	9:13:00 pm	701.79	82	.90	3.99	139	93	47	43	4.5		
TOTAL			707.60 (EST.)	971.0	10.715	46.336	1,454.	995.0					
AVERAGE				80.917	.8929	3.8613	121.17	82.917	47				

NOTE PORT #3, POINT #4 was taken about the AREA AS POINT #3 in port 3 because [illegible]

```
                0.0000 STO 01
                           RUN
EPA METHOD
5 NOMOGRAPH
PROGRAM

ENTER THE
FOLLOWING
DATA AS
REQUIRED.

PUSH R/S
AFTER
EACH DATA
ENTRY.

TEST
NUMBER=?
              2.0000      RUN

RUN NO. ?
              2.0000      RUN

FILTER
NUMBER=?
                          RUN

INITIAL
METER VOL
FT3=?
          632.2180        RUN
                          RUN
STACK
STATIC
PRESSURE
/PS/
IN. H2O=?
             -2.9500      RUN
BAROMETER
PRESSURE
/PB/
IN. HG=?
             30.1100      RUN
% H2O=?
              1.5000      RUN
SAMPLE RATE
/QM/
CFM=?
               .7500      RUN
STACK GAS
MOL WT
/MW/
LB/LB MOL=?
              28.713      RUN

AVG STACK
TEMP /TS/
DEG F=?
              78.00       RUN
```

TEST 2
RUN 2
INLET

```
AVG DELTA
P=? IN. H2O
                .816      RUN

AMBIENT
TEMP F=?
            74.0000       RUN

PITOT TUBE
COEFF
CP=?
                 .82      RUN

AVG STACK
VELOCITY
                  3,004.462
FPM.....

IDEAL
NOZZLE
DIAMETER
INCHES
                      0.217

ENTER THE
ACTUAL
NOZZLE
DIAMETER
TO BE USED
ON
INCHES...
                 .243     RUN
DELTA H
AT=?
              2.0910      RUN
                        2.091

ENTER THE
FOLLOWING
FOR EACH
TRAVERSE
POINT
******
DP
IN. H2O=?
PUSH STO A

TS DEG F
PUSH STO B

TM DEGR F
PUSH STO C, R/S
***
AFTER LAST
DATA POINT PUSH
0, STO A, R/S
*******

                 .610 STO 01
              80.000 STO 02
              81.000 STO 03
                         RUN
```

```
THE
FOLLOWING
IS GIVEN
FOR TRANSFER
TO THE
ISOKINETIC
PROGRAM 2
/FILE 5/

VELOCITY
PARAMETER
                     21.89
AVG METER
TEMP.
DEG F=
                      121.
AVG DELTA
H=  IN. H2O
                     3.862
AVG
DELTA P=
                     0.886

FINAL METER
VOLUME FT3=?
            707.600   RUN
                  707.600
INITIAL
METER VOL. FT3
                  632.218
ABSOLUTE
STACK PRES
PS IN. HG
                     29.89
AVG STACK TEMP
DEG F
                       81.
GEOMETRIC AVG
ABSOLUTE STACK
TEMP. DEG R
                  540.914
STANDARD
CONDITIONS ARE
29.92126 IN. HG
68.0 DEG F
******
END PROGRAM
```

```
                    CLX
          XEQ "ISOKIN2"
EPA METHOD
FIVE
ISOKINETIC
PROGRAM 2
```

TEST 2

TEST 2

RUN 2

INLET

```
ENTER DATA
FROM THE
NOMOGRAPH
PRGM.
AS REQUESTED

TEST NO.?
              2.    RUN
RUN NO.?
              2.    RUN
FILTER NO.?
                    RUN
VELOCITY
PARAMETER KV=?
          21.89     RUN
AVG METER
TEMP TM DEG F=?
           121.     RUN
DEG R =581.

AVG DELTA H
IN. H2O=?
          3.862     RUN
AVG DELTA P
IN. H2O=?
           .886     RUN
FINAL METER
VOL. FT3=?
        707.600     RUN
INITIAL METER
VOLUME FT3=?
        632.218     RUN
ABSOLUTE
STACK PRES.
IN. HG=?
         29.890     RUN
IS THE % H2O
KNOWN?

0 = YES
1 = NO
           1.00     RUN
WATER GAIN, G=?
           8.50     RUN
% CO2 =?
           0.00     RUN
%O2 =?
          20.90     RUN
%CO =?
           0.00     RUN
PITOT COEF CP=?
            .82     RUN
SAMPLE TIME
MIN =?
         72.000     RUN
NOZZLE
DIAMETER IN. =?
           .243     RUN
ROUND STACK?
1 = YES
0 = NO
          0.000     RUN
STACK SIDE
DIMENSION IN.=?
         14.000     RUN
OTHER SIDE IN.?
           30.0     RUN
AVG STACK TEMP
DEG F =?
           81.0     RUN
METER CALBRTN
FACTOR G =?
          1.001     RUN
=======
NET METER
VOL. FT3=
                75.457
CORRECTED
SAMPLE VOL.
VMSTD  SCF=
                68.501
MOLE FRACTION
DRY GAS MD=
                 0.994
MOLECULAR WT
STACK GAS MW
LB/LB MOL=
                28.773
AVG VELOCITY
FPM =?
             3,135.78
STACK AREA
AS SQ. IN.=
                420.0
STACK DRY
FLOW QS  SCFM=
             8,861.84
ACFM
             9,092.78
EXCESS AIR %
            33,983.74
**********
ISOKINETIC %I=
                 97.2
*********
```

PARTICULATE SAMPLE BOX SET UP
CHECKLIST

DATE: _____

PLANT: Bldg 195

LOCATION: Portsmouth NSY

PREP. BY: C. Yee

RUN NO.: Test 2 Run 3 INLET

STACK NO: LINE E

SAMPLE BOX NO.: 1

( ) 1. Wash all glassware with distilled water and then acetone.

( ) 2. Place approx. 100 ml distilled water in the first impinger, a modified Greenburg-Smith with straight tube 1/2 inch from the impinger bottom. Record exact weight to 1/10 of a gram.

( ) 3. Place approx. 100 ml distilled water in the second impinger, a standard Greenburg-Smith impinger (caricell tip). Record exact weight to 1/10 of a gram.

( ) 4. Impinger three is a dry modified Greenburg-Smith with straight tube 1/2 inch from the impinger bottom. Record dry tare weight to 1/10 of a gram.

( ) 5. Place approx. 175 ml of silica gel in the fourth impinger, a modified Greenburg-Smith with straight tube 1/2 inch from the impinger bottom. Record exact weight to 1/10 of a gram.

Impinger No.	Impinger weights (GRAMS)	Impinger Tare	Impinger substance Initial	Final	Condensate	
1-1	1. 100 ml	481.5	683.3	680.4	-2.9	
1-2	2. 100 ml	524.1	775.1	719.1	-6.0	
1-3	3. Dry	513.2		514.2	1	TOTAL
1-4	4. 175 g silica gel	524.4	735.3	751.8	16.5	+9.

( ) 8. Assemble impinger bottles and glass elbows so air flows from a small hole to a larger hole.

11ND-CBC-3960/47 (REV. 11-78)

SOURCE EMISSIONS TESTING DATA SHEET
11ND-CDC-3960/62 (Rev. 11-74)

PLANT	LOCATION: NORFOLK, VA	AMBIENT TEMPERATURE	BAROMETRIC PRESSURE, IN HG: 30.11
OPERATOR: SENTENO / FOERSTER	DATE: MARCH 15, 85	ASSUMED MOISTURE, %	HEATER BOX SETTING
RUN NO.: 3 / TEST: 2	SAMPLE BOX NO.	PROBE # (PITOT #): 3-1	PROBE LENGTH, in.: 36"
METER BOX NO.: 3	METER ΔH@: 2.091	NOZZLE I.D. NO.	NOZZLE DIAMETER, in.: .243
C FACTOR (Nomograph)	PITOT COEFFICIENT, CP: .82	PROBE HEATER SETTING	PROBE LINER MATERIAL: GLASS / LEAK RATE (CFM) @ " HG: 0.160 @ 20"

SCHEMATIC OF STACK CROSS SECTION (Show Traverse Points)

TRAVERSE POINT NUMBER	SAMPLING TIME (e) MIN	GAS METER READING (V_m) ft3	STACK TEMPERATURE (T_s) °F	VELOCITY HEAD (ΔP_s) In. H_2O	PRESSURE ACROSS ORIFICE (ΔH) In. H_2O	GAS SAMPLE TEMPERATURE AT DRY GAS METER Inlet (T_{min}) °F	Outlet (T_{mout}) °F	SAMPLE BOX TEMPERATURE °F	TEMPERATURE IMPINGER °F	SAMPLE VACUUM in. Hg.	CO_2 %	O_2 %
#1	11:32:00 (0 min)	715.735	82	.67	2.665	71	66	45	45	9.1		
#2	11:38:00	720.80	83	.885	3.699	99	67	45	38	18.5		
#3	11:44:00	726.59	83	.91	3.919	116	70	44	46	18.5		
#4	11:50:00	732.58	83	.78	3.418	126	74	45	51	13		
#1	11:58:30	738.427	81	.64	2.767	116	77	44	48	9		
#2	12:04:30	742.41	82	.89	3.907	126	80	45	48	18.2		
#3	12:10:30	748.74	83	.91	4.021	131	83	44	50	18.5		
#4	12:16:30	754.92	83	.80	3.559	135	85	44	51	14.1		
#1	12:24:30	761.968	81	.64	2.815	126	87	44	47	9		
#2	12:30:30	766.42	82	.82	3.6	130	88	44	47	14.0		
#3	12:36:30	772.102	83	.85	3.78	134	89	45	48	15.5		
#4	12:42:30	778.245	82	.775	3.47	137	90	45	49	12.8		
TOTAL	12:48:30	784.392										
AVERAGE												

Port 1 (#1–#4)
Port 2 (#1–#4)
Port 3 (#1–#4)

B-32

NOTE: The Delta H would not jump to the [illegible] that it was supposed to be [illegible] at [illegible] Hg

****
TEST IS PARTICULATE FOR
48" UPSTREAM, 12" DOWNSTREAM
14" X 30" SQUARE STACK
##########
PORT LOCATION FROM STACKS EDGE
TO CENTER OF PORT
****

PORT 1 = 5"

PORT 2 = 15"

PORT 3 = 25"

****
DEPTHS TO INSERT PROBES
****

POINT 1 = 1 13/16"

POINT 2 = 5 1/ 4"

POINT 3 = 8 13/16"

POINT 4 = 12 1/ 4"

VELOCITY TRAVERSE

--dP--	--SQRT dP--
0.734	0.857
0.915	0.957
0.900	0.949
0.770	0.878
0.590	0.768
0.910	0.954
0.950	0.975
0.870	0.933
0.580	0.762
0.895	0.946
0.885	0.941
0.850	0.922

dP RMS = 0.816

```
TM DEG F=
                137.
*******

        XEQ "NOMO 2"

                RUN
EPA METHOD
5 NOMOGRAPH
PROGRAM


ENTER THE
FOLLOWING
DATA AS
REQUIRED.

PUSH R/S
AFTER
EACH DATA
ENTRY.


TEST
NUMBER=?
            2.    RUN

RUN NO. ?
            3.    RUN

FILTER
NUMBER=?
            3.    RUN

INITIAL
METER VOL
FT3=?
        715.735   RUN
STACK
STATIC
PRESSURE
/PS/
IN. H2O=?
           -3.    CLX
        -2.92     RUN
BAROMETER
PRESSURE
/PB/
IN. HG=?
        30.11     RUN
% H2O=?
            1.    RUN
SAMPLE RATE
/QM/
CFM=?
          .75     RUN
STACK GAS
MOL WT
/MW/
LB/LB MOL=?
        28.77     RUN
```

```
AVG STACK
TEMP /TS/
DEG F=?
          80.00   RUN

AVG DELTA
P=? IN. H2O
           .816   RUN

AMBIENT
TEMP F=?
       46.0000    RUN

PITOT TUBE
COEFF
CP=?
           .82    RUN

AVG STACK
VELOCITY
            3,006.947
FPM....

IDEAL
NOZZLE
DIAMETER
INCHES
                0.223

ENTER THE
ACTUAL
NOZZLE
DIAMETER
TO BE USED
ON
INCHES...
           .243   RUN
DELTA H
AT=?
        2.0910    RUN
                2.091

ENTER THE
FOLLOWING
FOR EACH
TRAVERSE
POINT
******
DP
IN. H2O=?
PUSH STO A

TS DEG F
PUSH STO B

TM DEGR F
PUSH STO C, R/S
***
AFTER LAST
DATA POINT PUSH
0, STO A, R/S
*******
```

```
THE
FOLLOWING
IS GIVEN
FOR TRANSFER
TO THE
ISOKINETIC
PROGRAM 2
/FILE 5/


VELOCITY
PARAMETER
                20.76
AVG METER
TEMP.
DEG F=
                 121.
AVG DELTA
H=  IN. H2O
                3.470
AVG
DELTA P=
                0.794

FINAL METER
VOLUME FT3=?
        784.392   RUN
                784.392
INITIAL
METER VOL. FT3
                715.735
ABSOLUTE
STACK PRES
PS IN. HG
                29.90
AVG STACK TEMP
DEG F
                  82.
GEOMETRIC AVG
ABSOLUTE STACK
TEMP. DEG R
                542.333
STANDARD
CONDITIONS ARE
29.92126 IN. HG
68.0 DEG F
******
END PROGRAM
```

```
EPA
FIVE
ISOKINETIC
PROGRAM 2

ENTER DATA
FROM THE
NOMOGRAPH
PRGM.
AS REQUESTED

TEST NO.?
                2.    RUN
RUN NO.?
                3.    RUN
FILTER NO.?
                3.    RUN
VELOCITY
PARAMETER KV=?
            28.76     RUN
AVG METER
TEMP TM DEG F=?
              121.    RUN
DEG R =581.

AVG DELTA H
IN. H2O=?
             3.47     RUN
AVG DELTA P
IN. H2O=?
             .794     RUN
FINAL METER
VOL. FT3=?
          784.392     RUN
INITIAL METER
VOLUME FT3=?
          715.735     RUN
ABSOLUTE
STACK PRES.
IN. HG=?
           29.900     RUN
IS THE % H2O
KNOWN?

0 = YES
1 = NO
             1.00     RUN
WATER GAIN, G=?
             9.00     RUN
% CO2 =?
             0.00     RUN
%O2 =?
            20.90     RUN
%CO =?
             0.00     RUN
PITOT COEF CP=?
              .82     RUN
SAMPLE TIME
MIN =?.
           72.000     RUN
NOZZLE
DIAMETER IN. =?
             .243     RUN
```

```
ROUND STACK?
1 = YES
0 = NO
            1.000     RUN
STACK DIA. IN.?
           24.000     RUN
AVG STACK TEMP
DEG F =?
             82.0     RUN
METER CALBRTN
FACTOR G =?
           1.0001     RUN
=======
NET METER
VOL. FT3=
                     68.664
CORRECTED
SAMPLE VOL.
VMSTD  SCF=
                     62.355
MOLE FRACTION
DRY GAS MD=
                      0.993
MOLECULAR WT
STACK GAS MW
LB/LB MOL=
                     28.763
AVG VELOCITY
FPM =?
                  2,973.94
STACK AREA
AS SQ. IN.=
                      452.4
STACK DRY
FLOW QS  SCFM=
                  9,030.34
ACFM
                  9,279.69
EXCESS AIR %
                 33,983.74
**********
ISOKINETIC %I=
                       93.5
*********


SORRY. YOU BLEW
IT, SCREWBALL,
BETTER LUCK
NEXT TIME.

STANDARD
CONDITIONS ARE
29.92126 IN. HG
68.0 DEG F


TO RUN THIS
PROGRAM AGAIN
PUSH R/S
END****
```

PARTICULATE SAMPLE BOX SET UP
CHECKLIST

DATE: _____

PLANT: Bldg 195

LOCATION: Portsmouth NSY

PREP. BY: C. Yee

RUN NO.: TEST 2 RUN 4 INLET

STACK NO: LINE E

SAMPLE BOX NO.: 7

( ) 1. Wash all glassware with distilled water and then acetone.

( ) 2. Place approx. 100 ml distilled water in the first impinger, a modified Greenburg-Smith with straight tube 1/2 inch from the impinger bottom. Record exact weight to 1/10 of a gram.

( ) 3. Place approx. 100 ml distilled water in the second impinger, a standard Greenburg-Smith impinger (caricell tip). Record exact weight to 1/10 of a gram.

( ) 4. Impinger three is a dry modified Greenburg-Smith with straight tube 1/2 inch from the impinger bottom. Record dry tare weight to 1/10 of a gram.

( ) 5. Place approx. 175 ml of silica gel in the fourth impinger, a modified Greenburg-Smith with straight tube 1/2 inch from the impinger bottom. Record exact weight to 1/10 of a gram.

Impinger No.	Impinger weights (GRAMS)	Impinger Tare	Impinger + substance Initial	Final	Condensate	
7-1	1. 100 ml	506.0	608.3	605.6	-2.7	
7-2	2. 100 ml	492.1	592.9	593.7	0.8	
7-3	3. Dry	504.4		505.1	0.7	TOTAL
7-4	4. 175 g silica gel		650.6	660.5	9.9	8.7

( ) 8. Assemble impinger bottles and glass elbows so air flows from a small hole to a larger hole.

11ND-CBC-3960/47 (REV. 11-78)

SOURCE EMISSIONS TESTING DATA SHEET
11ND-CBC-3960/62 (Rev. 11-78)

PLANT: NORFOLK	LOCATION: LINE E		AMBIENT TEMPERATURE: 51	BAROMETRIC PRESSURE, IN HG: 30.21
OPERATOR: SENT/FOIER	DATE: 03/16/84		ASSUMED MOISTURE, %: 0.7	HEATER BOX SETTING
RUN NO.: 1	SAMPLE BOX NO.		PROBE # (PITOT #): 3.1	PROBE LENGTH, in.: 36
METER BOX NO.: 4	METER ΔH@: 2.0318		NOZZLE I.D. NO.: 1/4" TEFLON	NOZZLE DIAMETER, in.: 0.243
C FACTOR (Nomograph)	PITOT COEFFICIENT, CP: .82	SCHEMATIC OF STACK CROSS SECTION (Show Traverse Points)	PROBE HEATER SETTING	PROBE LINER MATERIAL: GLASS / LEAK RATE (CFM) @ " HG: 0.004 @ 15"

TRAVERSE POINT NUMBER	SAMPLING TIME (e) MIN	GAS METER READING (V_m) ft3	STACK TEMPERATURE (T_s) °F	VELOCITY HEAD (ΔP_s) In. H_2O	PRESSURE ACROSS ORIFICE (ΔH) In. H_2O	GAS SAMPLE TEMPERATURE AT DRY GAS METER Inlet (T_{min}) °F	Outlet (T_{mout}) °F	SAMPLE BOX TEMPERATURE °F	TEMPERATURE IMPINGER °F	SAMPLE VACUUM in. Hg.	CO_2 %	O_2 %
0 PORT 1	1:23:00	523.928	82	0.66 ~~0.635~~	2.56 ~~2.46~~	69	64	51	50	3.8	0	20.9
1	1:29:00	529.003	84	0.79	3.15	87	64	50	35	4.3		
2	1:35:00	536.455	82	0.82	3.38	102	67	50	40	4.6		
3	1:41:00	540.325	83	0.715	2.99	112	71	51	42	4.2		
4 PORT 2	1:47:00	546.058	82	0.68	2.78	99	75	51	46	4.0		
5	1:53:00	551.525	82	0.88	3.70	114	78	52	42	5.0		
6	1:59:00	557.590	83	0.89	3.78	121	81	52	44	5.0		
7	2:05:00	564.000	83	0.77	3.29	125	84	53	45	4.5		
8 PORT 3	2:11:00	570.073	82	0.65	2.77	122	86	54	45	3.8		
9	2:17:00	575.457	84	0.87	3.68	120	87	51	43	4.7		
10	2:23:00	581.569	83	0.898	3.85	126	89	52	45	5.0		
11	2:29:00	588.037	83	0.795	3.42	129	90	52	46	4.6		
12 TOTAL	2:35:00	594.253										
AVERAGE												

POST LEAK CHECK
0.008 CFM @ 5"

```
EPA METHOD
5 NOMOGRAPH
PROGRAM


ENTER THE
FOLLOWING
DATA AS
REQUIRED.

PUSH R/S
AFTER
EACH DATA
ENTRY.


TEST
NUMBER=?
                    RUN

RUN NO. ?
                    RUN

FILTER
NUMBER=?
              2.    RUN

INITIAL
METER VOL
FT3=?
        523.928     RUN
STACK
STATIC
PRESSURE
/PS/
IN. H2O=?
           -2.8     RUN
BAROMETER
PRESSURE
/PB/
IN. HG=?
          30.12     RUN
% H2O=?
             .7     RUN
SAMPLE RATE
/QM/
CFM=?
            .75     RUN
STACK GAS
MOL WT
/MW/
LB/LB MOL=?
         28.763     RUN

AVG STACK
TEMP /TS/
DEG F=?
          82.00     RUN

AVG DELTA
P=? IN. H2O
            .794    RUN
```

INLET
LINE E

```
AMBIENT
TEMP F=?
            8.0000    CLX
           51.0000    RUN

PITOT TUBE
COEFF
CP=?
               .82    RUN

AVG STACK
VELOCITY
                2,971.049
FPM....

IDEAL
NOZZLE
DIAMETER
INCHES
                    0.223

ENTER THE
ACTUAL
NOZZLE
DIAMETER
TO BE USED
DN
INCHES...
              .243    RUN
DELTA H
AT=?
           2.0318     RUN
                    2.032

ENTER THE
FOLLOWING
FOR EACH
TRAVERSE
POINT
******
DP
IN. H2O=?
PUSH STO A

TS DEG F
PUSH STO B

TM DEGR F
PUSH STO C, R/S
***
AFTER LAST
DATA POINT PUSH
0, STO A, R/S
*******

             .660 STO 01
           82.000 STO 02
           69.000 STO 03
                      RUN

******
DELTA H=
                    2.558
 IN. H2O
```

```
THE
FOLLOWING
IS GIVEN
FOR TRANSFER
TO THE
ISOKINETIC
PROGRAM 2
/FILE 5/


VELOCITY
PARAMETER
                   20.61
AVG METER
TEMP.
DEG F=
                    111.
AVG DELTA
H=  IN. H2O
                   3.280
AVG
DELTA P=
                   0.782

FINAL METER
VOLUME FT3=?
         594.253    RUN
                  594.253
INITIAL
METER VOL. FT3
                  523.928
ABSOLUTE
STACK PRES
PS IN. HG
                   29.91
AVG STACK TEMP
DEG F
                     83.
GEOMETRIC AVG
ABSOLUTE STACK
TEMP. DEG R
                  542.750
STANDARD
CONDITIONS ARE
29.92126 IN. HG
68.0 DEG F
******
END PROGRAM
```

```
FIVE
ISOKINETIC
PROGRAM 2

ENTER DATA
FROM THE
NOMOGRAPH
PRGM.
AS REQUESTED

TEST NO.?
                2.    RUN
RUN NO.?
                4.    RUN
FILTER NO.?
                      RUN
VELOCITY
PARAMETER KV=?
            20.61     RUN
AVG METER
TEMP TM DEG F=?
             111.     RUN
DEG R =571.

AVG DELTA H
IN. H2O=?
             3.28     RUN
AVG DELTA P
IN. H2O=?
             .782     RUN
FINAL METER
VOL. FT3=?
          594.253     RUN
INITIAL METER
VOLUME FT3=?
          523.928     RUN
ABSOLUTE
STACK PRES.
IN. HG=?
           29.910     RUN
IS THE % H2O
KNOWN?

0 = YES
1 = NO
             1.00     RUN
WATER GAIN, G=?
              .00     CLX
             8.70     RUN
% CO2 =?
             0.00     RUN
%O2 =?
            20.90     RUN
%CO =?
             0.00     RUN
PITOT COEF CP=?
             8.00     CLX
              .82     RUN
SAMPLE TIME,
MIN =?
           72.000     RUN
```

```
NOZZLE
DIAMETER IN. =?
              .243    RUN
ROUND STACK?
1 = YES
0 = NO
            0.000     RUN
STACK SIDE
DIMENSION IN.=?
           14.000     RUN
OTHER SIDE IN.?
             30.0     RUN
AVG STACK TEMP
DEG F =?
             83.0     RUN
METER CALBRTN
FACTOR G =?
            1.001     RUN
=======
NET METER
VOL. FT3=
                    70.395
CORRECTED
SAMPLE VOL.
VMSTD  SCF=
                    65.068
MOLE FRACTION
DRY GAS MD=
                     0.994
MOLECULAR WT
STACK GAS MW
LB/LB MOL=
                    28.768
AVG VELOCITY
FPM =?
                 2,951.68
STACK AREA
AS SQ. IN.=
                     420.0
STACK DRY
FLOW QS  SCFM=
                 8,312.65
ACFM
                 8,555.09
EXCESS AIR %
                33,983.74
**********
ISOKINETIC %I=
                      98.4
*********
```

PARTICULATE SAMPLE BOX SET UP
CHECKLIST

DATE:
PLANT: Bldg 195
LOCATION: Portsmouth NSY
PREP. BY: C. Yee

RUN NO.: TEST 2 RUN 2 OUTLET
STACK NO: LINE E
SAMPLE BOX NO.: 7

( ) 1. Wash all glassware with distilled water and then acetone.

( ) 2. Place approx. 100 ml distilled water in the first impinger, a modified Greenburg-Smith with straight tube 1/2 inch from the impinger bottom. Record exact weight to 1/10 of a gram.

( ) 3. Place approx. 100 ml distilled water in the second impinger, a standard Greenburg-Smith impinger (caricell tip). Record exact weight to 1/10 of a gram.

( ) 4. Impinger three is a dry modified Greenburg-Smith with straight tube 1/2 inch from the impinger bottom. Record dry tare weight to 1/10 of a gram.

( ) 5. Place approx. 175 ml of silica gel in the fourth impinger, a modified Greenburg-Smith with straight tube 1/2 inch from the impinger bottom. Record exact weight to 1/10 of a gram.

Impinger No.	Impinger weights (GRAMS)	Impinger Tare	Impinger + substance Initial	Final	Condensate	
7-1	1. 200 ml H_2O	505.9	707.9	713.3	5.4	
7-2	2. 200 ml 0.1N KOH	491.9	694.3	696.1	1.8	
7-3	3. Dry	504.4		505.5	1.1	TOTAL
7-4	4. 175 g silica gel		658.2	669.8	11.6	19.9 g.

( ) 8. Assemble impinger bottles and glass elbows so air flows from a small hole to a larger hole.

11ND-CBC-3960/47 (REV. 11-78)

LINE 'E'

SOURCE EMISSIONS TESTING DATA SHEET
1110-CBC-3960/62 (Rev. 11-78)

PLANT B195	LOCATION NNSY	PORT 2	AMBIENT TEMPERATURE 45	BAROMETRIC PRESSURE, IN HG 30.11
OPERATOR R.W.S./SUZ	DATE 15 MARCH 85		ASSUMED MOISTURE, % 0.8	HEATER BOX SETTING —
RUN NO. 2	SAMPLE BOX NO. 7	PORT 1	PROBE # (PITOT #) 1 (1)	PROBE LENGTH, in. 36"
METER BOX NO. 2	METER ΔH@ 1.8168 γ=0.9987	TRAIN GR	NOZZLE I.D. NO. 14	NOZZLE DIAMETER, in. 0.240
C FACTOR (Nomograph) —	PITOT COEFFICIENT, CP .83	SCHEMATIC OF STACK CROSS SECTION (Show Traverse Points)	PROBE HEATER SETTING —	PROBE LINER MATERIAL GLASS

LEAK RATE (CFM) @ " HG: 20.02 @ 21.5; 20.01 @ 6.0; 1.0 A-0.002

TRAVERSE POINT NUMBER	SAMPLING TIME (e) MIN	GAS METER READING (V_m) ft3	STACK TEMPERATURE (T_s) °F	VELOCITY HEAD (ΔP_s) In. H_2O	PRESSURE ACROSS ORIFICE (ΔH) In. H_2O	GAS SAMPLE TEMPERATURE AT DRY GAS METER Inlet (T min) °F.	Outlet (T mout) °F.	SAMPLE BOX TEMPERATURE °F	TEMPERATURE IMPINGER °F	SAMPLE VACUUM in. Hg.	CO_2 %	O_2 %
PORT 2 1	0 (8:00)	777.103	49	.5	1.766	63	62	—	35	4.6	0	20.7
2	6	781.4	54	.69	2.441	69	62	—	33	5.1		
3	12	786.6	55	.88	3.160	78	64	—	39	6.3		
4	18	792.4	56	1.2	4.372	87	66	—	42	8.2		
5	24	799.1	57	1.25	4.612	95	70	—	45	8.9		
6	30	806.5	59	1.2	4.458	101	73	—	46	9.1		
PORT 1 1	36	813.557	49	.44	1.610	82	75	—	41	5.8		
2	42	817.8	56	.61	2.227	88	76	—	40	6.4		
3	48	822.8	58	.89	3.266	93	77	—	43	8.0		
4	54	828.8	59	1.15	4.249	98	78	—	45	9.8		
5	60	835.6	60	1.15	4.279	103	80	—	45	10.0		
6	66	842.8	61	1.1	~~4.1~~ 4.100	105	81	—	46	10.0		
TOTAL	72	849.667						—				
AVERAGE								—				

.028 .026 21.5 1.0 .069 .016 .096 10

```
XEQ "ISOKIN2"
EPA METHOD
FIVE
ISOKINETIC
PROGRAM 2

ENTER DATA
FROM THE
NOMOGRAPH
PRGM.
AS REQUESTED

TEST NO.?
          2.    RUN
RUN NO.?
          2.    RUN
FILTER NO.?
                RUN
VELOCITY
PARAMETER KV=?
       21.53    RUN
AVG METER
TEMP TM DEG F=?
        89.     RUN
DEG R =549.

AVG DELTA H
IN. H2O=?
       3.378    RUN
AVG DELTA P
IN. H2O=?
        .897    RUN
FINAL METER
VOL. FT3=?
     849.667    RUN
INITIAL METER
VOLUME FT3=?
     777.103    RUN
ABSOLUTE
STACK PRES.
IN. HG=?
      29.760    RUN
IS THE % H2O
KNOWN?

0 = YES
1 = NO
        1.00    RUN
WATER GAIN, G=?
       19.90    RUN
% CO2 =?
        0.00    RUN
%O2 =?
       20.90    RUN
%CO =?
        0.00    RUN
PITOT COEF CP=?
         .83    RUN
SAMPLE TIME
MIN =?
      72.000    RUN
NOZZLE
DIAMETER IN. =?
        .240    RUN
```

TEST 2
RUN 2
OUTLET
LINE E

```
ROUND STACK?
1 = YES
0 = NO
       1.000    RUN
STACK DIA. IN.?
      24.000    RUN
AVG STACK TEMP
DEG F =?
        56.0    RUN
METER CALBRTN
FACTOR G =?
       .9987    RUN
=======
NET METER
VOL. FT3=
                72.470
CORRECTED
SAMPLE VOL.
VMSTD  SCF=
                69.321
MOLE FRACTION
DRY GAS MD=
                 0.987
MOLECULAR WT
STACK GAS MW
LB/LB MOL=
                28.691
AVG VELOCITY
FPM =?
             3,133.09
STACK AREA
AS SQ. IN.=
                 452.4
STACK DRY
FLOW QS  SCFM=
             9,880.06
ACFM
             9,711.31
EXCESS AIR %
            33,983.74
**********
ISOKINETIC %I=
                  97.4
*********
```

```
                XEQ "NOMO 2"
EPA METHOD
 NOMOGRAPH
PROGRAM

ENTER THE
FOLLOWING
DATA AS
EQUIRED.

PUSH R/S
FTER
ACH DATA
ENTRY.

TEST
NUMBER=?
          2.000     RUN

RUN NO. ?
          2.000     RUN

FILTER
NUMBER=?
                    RUN

INITIAL
METER VOL
FT3=?
        777.103     RUN

STACK
STATIC
PRESSURE
/PS/
IN. H2O=?
           .480     RUN

BAROMETER
PRESSURE
/PB/
IN. HG=?
                XEQ "NOMO 2"
EPA METHOD
 NOMOGRAPH
PROGRAM

NTER THE
FOLLOWING
DATA AS
EQUIRED.

PUSH R/S
FTER
ACH DATA
ENTRY.
```

TEST 2
RUN 2
OUTLET
LINE E

```
TEST
NUMBER=?
          2.000     RUN

RUN NO. ?
          2.000     RUN

FILTER
NUMBER=?
                    RUN

INITIAL
METER VOL
FT3=?
        777.103     RUN

STACK
STATIC
PRESSURE
/PS/
IN. H2O=?
           .000     CLX
         -4.000     RUN

BAROMETER
PRESSURE
/PB/
IN. HG=?
         30.110     RUN

% H2O=?
           .800     RUN

SAMPLE RATE
/QM/
CFM=?
           .750     RUN

STACK GAS
MOL WT
/MW/
LB/LB MOL=?
         28.752     RUN

AVG STACK
TEMP /TS/
DEG F=?
          65.00     RUN

AVG DELTA
P=? IN. H2O
           .894     RUN

AMBIENT
TEMP F=?
        44.0000     RUN

PITOT TUBE
COEFF
CP=?
           .83      RUN

AVG STACK
VELOCITY
                3,149.479
FPM....

IDEAL
NOZZLE
DIAMETER
INCHES
                0.215

ENTER THE
ACTUAL
NOZZLE
DIAMETER
TO BE USED
ON
INCHES...
          .240      RUN

DELTA H
AT=?
        1.8168      RUN
                1.817

ENTER THE
FOLLOWING
FOR EACH
TRAVERSE
POINT
******
DP
IN. H2O=?
PUSH STO A

TS DEG F
PUSH STO B

TM DEGR F
PUSH STO C, R/S
***
AFTER LAST
DATA POINT PUSH
0, STO A, R/S
*******

THE
FOLLOWING
IS GIVEN
FOR TRANSFER
TO THE
ISOKINETIC
PROGRAM 2
/FILE 5/

VELOCITY
PARAMETER
                21.53
AVG METER
TEMP.
DEG F=
                 89.
AVG DELTA
H=  IN. H2O
                3.378
AVG
DELTA P=
                0.897

FINAL METER
VOLUME FT3=?
        849.667     RUN
              849.667
INITIAL
METER VOL. FT3
              777.103
ABSOLUTE
STACK PRES
PS IN. HG
                29.76
AVG STACK TEMP
DEG F
                 56.
GEOMETRIC AVG
ABSOLUTE STACK
TEMP. DEG R
             516.079
STANDARD
CONDITIONS ARE
29.92126 IN. HG
68.0 DEG F
******
END PROGRAM
```

2,2
OUTLET
LINE E

.500 STO 01
49.000 STO 02
63.000 STO 03
RUN

******
DELTA H=
1.766
IN. H2O
******
AT PT. NO.
1.

WHEN:
DP IN. H2O=
0.500

TS DEG F=
49.

TM DEG F=
63.

****

.69 STO 01
54. STO 02
69. STO 03
RUN

******
DELTA H=
2.441
IN. H2O
******
AT PT. NO.
2.

WHEN:
DP IN. H2O=
0.690

TS DEG F=
54.

TM DEG F=
69.

****

.88 STO 01
55. STO 02
78. STO 03
RUN

******
DELTA H=
3.160
IN. H2O
******
AT PT. NO.
3.

WHEN:
DP IN. H2O=
0.880

TS DEG F=
55.

TM DEG F=
78.

****

1.2 STO 01
56. STO 02
87. STO 03
RUN

******
DELTA H=
4.372
IN. H2O
******
AT PT. NO.
4.

WHEN:
DP IN. H2O=
1.200

TS DEG F=
56.

TM DEG F=
87.

****

1.25 STO 01
57. STO 02
95. STO 03
RUN

******
DELTA H=
4.612
IN. H2O
******
AT PT. NO.
5.

WHEN:
DP IN. H2O=
1.250

TS DEG F=
57.

TM DEG F=
95.

****

1.2 STO 01
59. STO 02
101. STO 03
RUN

******
DELTA H=
4.459
IN. H2O
******
AT PT. NO.
6.

WHEN:
DP IN. H2O=
1.200

TS DEG F=
59.

TM DEG F=
101.

****

CLX
.44 STO 01
49. STO 02
82. STO 03
RUN

******
DELTA H=
1.610
IN. H2O
******
AT PT. NO.
7.

WHEN:
DP IN. H2O=
0.440

TS DEG F=
49.

TM DEG F=
82.

****

.61
CLX
.61 STO 01
56. STO 02
88. STO 03
RUN

******
DELTA H=
2.227
IN. H2O
******
AT PT. NO.
8.

WHEN:
DP IN. H2O=
0.610

TS DEG F=
56.

TM DEG F=
[illegible]

****

.69 STO [illegible]
58. STO 02
93. STO 03

******
DELTA H=
3.[illegible]
IN. H2O
******
AT PT. NO.

WHEN:
DP IN. H2O=
0.890

TS DEG F=
5[illegible]

TM DEG F=
[illegible]

****

1.15 STO [illegible]
59. STO [illegible]
98. STO 03
[illegible]

******
DELTA H=
4.[illegible]
IN. H2O
******
AT PT. NO.
[illegible]

WHEN:
DP IN. H2O=
1.15[illegible]

TS DEG F=

TM DEG F=

****

AFTER FINAL
TRAVERSE DATA
POINT, PUSH
0, STO A, R/S
***PROCEED AS
YOU WERE.

PARTICULATE SAMPLE BOX SET UP
CHECKLIST

DATE: _____
PLANT: Bldg 195
LOCATION: Portsmouth NSY
PREP. BY: C. Yee

RUN NO.: TEST 2 RUN 3 OUTLET
STACK NO: LINE E
SAMPLE BOX NO.: 4

( ) 1. Wash all glassware with distilled water and then acetone.

( ) 2. Place approx. 100 ml distilled water in the first impinger, a modified Greenburg-Smith with straight tube 1/2 inch from the impinger bottom. Record exact weight to 1/10 of a gram.

( ) 3. Place approx. 100 ml distilled water in the second impinger, a standard Greenburg-Smith impinger (caricell tip). Record exact weight to 1/10 of a gram.

( ) 4. Impinger three is a dry modified Greenburg-Smith with straight tube 1/2 inch from the impinger bottom. Record dry tare weight to 1/10 of a gram.

( ) 5. Place approx. 175 ml of silica gel in the fourth impinger, a modified Greenburg-Smith with straight tube 1/2 inch from the impinger bottom. Record exact weight to 1/10 of a gram.

Impinger No.	Impinger weights (GRAMS)	Impinger Tare	Impinger + substance Initial	Final	Condensate	
4-1	1. 200 ml H_2O	513.5	716.4	714.8	-1.6	
4-2	2. 100 ml 0.1N KOH	503.4	704.4	705.1	.7	
4-3	3. Dry	494.5		494.9	.4	TOTAL
4-4	4. 175 g silica gel		684.5	694.8	10.3	9.8

( ) 8. Assemble impinger bottles and glass elbows so air flows from a small hole to a larger hole.

11ND-CBC-3960/47 (REV. 11-78)

LINE 'E'

SOURCE EMISSIONS TESTING DATA SHEET
1100-CBC-3060/62 (Rev. 11-74)

PLANT: B195	LOCATION: NNSY	AMBIENT TEMPERATURE: 40°F 52°F	BAROMETRIC PRESSURE, IN HG: 30.16
OPERATOR: RWS/SUZ	DATE: 15 MARCH 85	ASSUMED MOISTURE, %: 0.8	HEATER BOX SETTING: —
RUN NO.: 3	SAMPLE BOX NO.: 4	PROBE # (PITOT #): 1 (1)	PROBE LENGTH, in.: 36
METER BOX NO.: 2	METER ΔH@ γ=0.9987: 1.8168	NOZZLE I.D. NO.: 14	NOZZLE DIAMETER, in.: 0.240
C FACTOR (Nomograph): —	PITOT COEFFICIENT, CP: .83	PROBE HEATER SETTING: —	PROBE LINER MATERIAL: GLASS

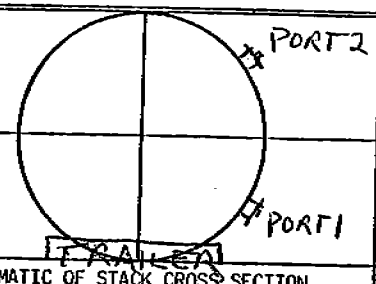

SCHEMATIC OF STACK CROSS SECTION (Show Traverse Points)

LEAK RATE (CFM) @ " HG: .003 @ 16; .003 @ 6; .007 @ 6

TRAVERSE POINT NUMBER	SAMPLING TIME (e) MIN	GAS METER READING (V_m) ft3	STACK TEMPERATURE (T_s) °F	VELOCITY HEAD (ΔP_s) In. H_2O	PRESSURE ACROSS ORIFICE (ΔH) In. H_2O	GAS SAMPLE TEMPERATURE AT DRY GAS METER: Inlet (T min) °F.	Outlet (T mout) °F.	SAMPLE BOX TEMPERATURE °F	TEMPERATURE IMPINGER °F	SAMPLE VACUUM in. Hg.	CO_2 %	O_2 %
PORT 2 1	0 (11:30P)	850.731	77	.68	2.286	65	65	—	43	4.2	0	20.7
2	6	855.9	78	.92	3.139	74	65	—	43	4.5		
3	12	861.5	81	1.15	3.961	82	67	—	43	5.1		
4	18	868.0	81	1.2	4.186	89	69	—	43	5.5		
5	24	874.7	81	1.15 ~~1.2~~	4.041	93	71	—	43	5.7		
6	30	881.7	81	1.2	4.232	95	73	—	43	5.8		
PORT 1 1	36	888.676	52	.44	1.604	83	74	—	43	4.1		
2	42	892.9	62	.57	2.050	86	74	—	43	4.1		
3	48	897.7	76	.85	2.993	89	75	—	43	5.0		
4	54	903.7	80	1.1	3.873	93	76	—	42	5.9		
5	60	910.4	81	1.1	3.887	96	77	—	43	5.9		
6	66	916.7	81	1.0	3.540	97	78	—	42	6.0		
TOTAL	72	923.362						—				
AVERAGE								—				

B-47

```
                XEQ "NOMO 2"
EPA METHOD
5 NOMOGRAPH
PROGRAM

ENTER THE
FOLLOWING
DATA AS
REQUIRED.

PUSH R/S
AFTER
EACH DATA
ENTRY.

TEST
NUMBER=?
            2.000     RUN

RUN NO. ?
            3.000     RUN

FILTER
NUMBER=?
                      RUN

INITIAL
METER VOL
FT3=?
          850.731     RUN
STACK
STATIC
PRESSURE
/PS/
IN. H2O=?
           -4.700     RUN
BAROMETER
PRESSURE
/PB/
IN. HG=?
           30.160     RUN
% H2O=?
             .800     RUN
SAMPLE RATE
/QM/
CFM=?
             .750     RUN
STACK GAS
MOL WT
/MW/
LB/LB MOL=?
           28.752     RUN

AVG STACK
TEMP /TS/
DEG F=?
            56.00     RUN
```

OUTLET LINE E

```
AVG DELTA
P=? IN. H2O
                .9    RUN

AMBIENT
TEMP F=?
          40.0000     RUN

PITOT TUBE
COEFF
CP=?
               .83    RUN

AVG STACK
VELOCITY
              3,129.813
FPM....

IDEAL
NOZZLE
DIAMETER
INCHES
                     0.215

ENTER THE
ACTUAL
NOZZLE
DIAMETER
TO BE USED
IN
INCHES...
              .240    RUN
DELTA H
AT=?
           1.8168     RUN
                     1.817

ENTER THE
FOLLOWING
FOR EACH
TRAVERSE
POINT
******
```

```
THE
FOLLOWING
IS GIVEN
FOR TRANSFER
TO THE
ISOKINETIC
PROGRAM 2
/FILE 5/

VELOCITY
PARAMETER
                    22.32
AVG METER
TEMP.
DEG F=
                     87.
AVG DELTA
H=  IN. H2O
                    3.316
AVG
DELTA P=
                    0.928

FINAL METER
VOLUME FT3=?
          923.362   RUN
                  923.362
INITIAL
METER VOL. FT3
                  850.731
ABSOLUTE
STACK PRES
PS IN. HG
                    29.81
AVG STACK TEMP
DEG F
                     76.
GEOMETRIC AVG
ABSOLUTE STACK
TEMP. DEG R
                  535.842
STANDARD
CONDITIONS ARE
29.92126 IN. HG
68.0 DEG F
******
END PROGRAM
```

```
XEQ "ISOKIN2"
EPA METHOD
FIVE
ISOKINETIC
PROGRAM 2

ENTER DATA
FROM THE
NOMOGRAPH
PRGM.
AS REQUESTED

TEST NO.?
              2.    RUN
RUN NO.?
              3.    RUN
FILTER NO.?
              2.    CLX
                    RUN
VELOCITY
PARAMETER KV=?
          22.32     RUN
AVG METER
TEMP TM DEG F=?
             87.    RUN
DEG R =547.

AVG DELTA H
IN. H2O=?
          3.316     RUN
AVG DELTA P
IN. H2O=?
           .928     RUN
FINAL METER
VOL. FT3=?
        923.362     RUN
INITIAL METER
VOLUME FT3=?
        850.731     RUN
ABSOLUTE
STACK PRES.
IN. HG=?
         29.810     RUN
IS THE % H2O
KNOWN?

0 = YES
1 = NO
           1.00     RUN
WATER GAIN, G=?
           9.80     RUN
% CO2 =?
           0.00     RUN
%O2 =?
          20.90     RUN
%CO =?
           0.00     RUN
PITOT COEF CP=?
            .83     RUN
SAMPLE TIME
MIN =?
         72.000     RUN
NOZZLE
DIAMETER IN. =?
            .24     RUN
```

OUTLET

```
ROUND STACK?
1 = YES
0 = NO
          1.000     RUN
STACK DIA. IN.?
         24.000     RUN
AVG STACK TEMP
DEG F =?
           76.0     RUN
METER CALBRTN
FACTOR G =?
          .9987     RUN
=======
NET METER
VOL. FT3=
                 72.537
CORRECTED
SAMPLE VOL.
VMSTD  SCF=
                 69.755
MOLE FRACTION
DRY GAS MD=
                  0.993
MOLECULAR WT
STACK GAS MW
LB/LB MOL=
                 28.765
AVG VELOCITY
FPM =?
              3,241.18
STACK AREA
AS SQ. IN.=
                  452.4
STACK DRY
FLOW QS  SCFM=
              9,923.81
ACFM
             10,115.39
EXCESS AIR %
             33,983.74
**********
ISOKINETIC %I=
                  97.6
*********
```

PARTICULATE SAMPLE BOX SET UP
CHECKLIST

DATE: 16 MAR 85
PLANT: Bldg 195
LOCATION: Portsmouth NSY
PREP. BY: C. Yee

Test 2, OUTLET
RUN NO.: 4
STACK NO: line E
SAMPLE BOX NO.: 6

( ) 1. Wash all glassware with distilled water and then acetone.

( ) 2. Place approx. 100 ml distilled water in the first impinger, a modified Greenburg-Smith with straight tube 1/2 inch from the impinger bottom. Record exact weight to 1/10 of a gram.

( ) 3. Place approx. 100 ml distilled water in the second impinger, a standard Greenburg-Smith impinger (caricell tip). Record exact weight to 1/10 of a gram.

( ) 4. Impinger three is a dry modified Greenburg-Smith with straight tube 1/2 inch from the impinger bottom. Record dry tare weight to 1/10 of a gram.

( ) 5. Place approx. 175 ml of silica gel in the fourth impinger, a modified Greenburg-Smith with straight tube 1/2 inch from the impinger bottom. Record exact weight to 1/10 of a gram.

Impinger No.	Impinger weights (GRAMS)	Impinger Tare	Impinger + substance Initial	Final	Condensate	
6-1	1. 100 ml H_2O	502.5	604.0	601.5	-2.5	
6-2	2. 100 ml 0.1N KOH	505.0	606.0	607.3	1.3	
6-3	3. Dry	484.0	—	484.7	0.7	TOTAL
6-4	4. 175 g silica gel	—	671.2	680.7	9.5	9.0

( ) 8. Assemble impinger bottles and glass elbows so air flows from a small hole to a larger hole.

11ND-CBC-3960/47 (REV. 11-78)

LINE E, OUTLET

PRETEST LEAK CHECKS
@ Nozzle = 0.001 @ 3" Hg
VP = passed
SP = passed

SOURCE EMISSIONS TESTING DATA SHEET
11ND-CBC-3960/62 (Rev. 11-78)

PLANT: B195	LOCATION: NNSY	Port 2	AMBIENT TEMPERATURE: 57	BAROMETRIC PRESSURE, IN HG: 30.21
OPERATOR: SUZ/SAM	DATE: 16 MAR 85		ASSUMED MOISTURE, %: 0.7	HEATER BOX SETTING: /
RUN NO.: 4	SAMPLE BOX NO.: 6		PROBE # (PITOT #): 1 (1)	PROBE LENGTH, in.: 36
METER BOX NO.: 2	METER ΔH@: 1.8168 D=.9987	Port 1	NOZZLE I.D. NO.: 14	NOZZLE DIAMETER, in.: 0.241
C FACTOR (Nomograph): /	PITOT COEFFICIENT, CP: 0.83	(STACK) SCHEMATIC OF STACK CROSS SECTION (Show Traverse Points)	PROBE HEATER SETTING: /	PROBE LINER MATERIAL: glass / LEAK RATE (CFM) @ " HG: 0.004 @ 20

TRAVERSE POINT NUMBER	SAMPLING TIME (θ) MIN	GAS METER READING (V_m) ft3	STACK TEMPERATURE (T_s) °F	VELOCITY HEAD (ΔP_s) In. H_2O	PRESSURE ACROSS ORIFICE (ΔH) In. H_2O	GAS SAMPLE TEMPERATURE AT DRY GAS METER: Inlet (T min) °F	Outlet (T mout) °F	SAMPLE BOX TEMPERATURE °F	TEMPERATURE IMPINGER °F	SAMPLE VACUUM in. Hg.	CO_2 %	O_2 %
PORT 2 1	0 / 1:16	923.885	58	.49	1.745	67	67	/	47	3.0	0	20.9
2	6	928.5	58	.67	2.409	72	66	/	35	3.5		
3	12	933.44	78	.90	3.163	80	68	/	36	4.5		
4	18	939.30	79	1.10	3.922	89	70	/	37	5.0		
5	24	945.87	80	1.20	4.326	96	74	/	38	6.0		
6	30	952.75	81	1.15	4.167	100	77	/	39	6.0		
PORT 1 1	36	959.616	60	.42	1.555	90	79	/	42	4.5		
2	42	963.78	60	.59	2.167	95	81	/	36	5.0		
3	48	968.77	77	.83	3.019	98	82	/	35	6.0		
4	54	974.55	79	1.10	4.015	102	84	/	37	7.0		
5	60	981.25	81	1.05	3.839	105	85	/	38	7.5		
6	66	987.79	81	1.00	3.669	107	86	/	39	7.5		
TOTAL	72 / 2:35	994.456										
AVERAGE												

POST TEST LEAK CHECKS
@ Nozzle = 0.003 @ 8"
VP = passed
SP = passed

```
EPA METHOD
5 NOMOGRAPH
PROGRAM

ENTER THE
FOLLOWING
DATA AS
REQUIRED.

PUSH R/S
AFTER
EACH DATA
ENTRY.

TEST
NUMBER=?
          2.000    RUN

RUN NO. ?
          4.000    RUN

FILTER
NUMBER=?
                   RUN

INITIAL
METER VOL
FT3=?
        923.885    RUN

STACK
STATIC
PRESSURE
/PS/
IN. H2O=?
         -4.900    RUN

BAROMETER
PRESSURE
/PB/
IN. HG=?
         30.210    RUN

% H2O=?
           .700    RUN

SAMPLE RATE
/GM/
CFM=?
           .750    RUN

STACK GAS
MOL WT
/MW/
LB/LB MOL=?
         28.765    RUN

AVG STACK
TEMP /TS/
DEG F=?
         76.00     RUN

AVG DELTA
=? IN. H2O
           .928    RUN
```

OUTLET LINE E

```
AMBIENT
TEMP F=?
        57.0000    RUN

PITOT TUBE
COEFF
CP=?
            .83    RUN

AVG STACK
VELOCITY
                3,236.485
FPM....

IDEAL
NOZZLE
DIAMETER
INCHES
                    0.212

ENTER THE
ACTUAL
NOZZLE
DIAMETER
TO BE USED
DN
INCHES...
           .241    RUN
DELTA H
AT=?
        1.8168     RUN
                    1.817

ENTER THE
FOLLOWING
FOR EACH
TRAVERSE
POINT
******
DP
IN. H2O=?
PUSH STO A

TS DEG F
PUSH STO B

TM DEGR F
PUSH STO C, R/S
***
AFTER LAST
DATA POINT PUSH
0, STO A, R/S
*******

           .490 STO 01
        58.000 STO 02
        67.000 STO 03
                   RUN

******
DELTA H=
                    1.745
 IN. H2O
******
```

```
THE
FOLLOWING
IS GIVEN
FOR TRANSFER
TO THE
ISOKINETIC
PROGRAM 2
/FILE 5/

VELOCITY
PARAMETER
                   21.33
AVG METER
TEMP.
DEG F=
                     92.
AVG DELTA
H=  IN. H2O
                   3.166
AVG
DELTA P=
                   0.852

FINAL METER
VOLUME FT3=?
        994.456    RUN
                 994.456
INITIAL
METER VOL. FT3
                 923.885
ABSOLUTE
STACK PRES
PS IN. HG
                   29.85
AVG STACK TEMP
DEG F
                     73.
GEOMETRIC AVG
ABSOLUTE STACK
TEMP. DEG R
                 532.577
STANDARD
CONDITIONS ARE
29.92126 IN. HG
68.0 DEG F
******
```

```
          XEQ "ISOKIN2"
EPA METHOD
FIVE
ISOKINETIC
PROGRAM 2

ENTER DATA
FROM THE
NOMOGRRPH
PRGM.
AS REQUESTED

TEST NO.?
              2.     RUN
RUN NO.?
              4.     RUN
FILTER NO.?
                     RUN
VELOCITY
PARAMETER KV=?
          21.33      RUN
AVG METER
TEMP TM DEG F=?
             92.     RUN
DEG R =552.

AVG DELTA H
IN. H2O=?
          3.166      RUN
AVG DELTA P
IN. H2O=?
           .852      RUN
FINAL METER
VOL. FT3=?
        994.456      RUN
INITIAL METER
VOLUME FT3=?
        923.885      RUN
ABSOLUTE
STACK PRES.
IN. HG=?
         29.850      RUN
IS THE % H2O
KNOWN?

0 = YES
1 = NO
          1.00       RUN
WATER GAIN, G=?
          9.00       RUN
% CO2 =?
          0.00       RUN
%O2 =?
         20.90       RUN
%CO =?
          0.00       RUN
PITOT COEF CP=?
          3.00       CLX
           .83       RUN
SAMPLE TIME
MIN =?
        72.000       RUN
```

OUTLET

```
NOZZLE
DIAMETER IN. =?
           .241      RUN
ROUND STACK?
1 = YES
0 = NO
         1.000       RUN
STACK DIA. IN.?
         4.000       CLX
        24.000       RUN
AVG STACK TEMP
DEG F =?
          73.0       RUN
METER CALBRTN
FACTOR G =?
         .9987       RUN
=======
NET METER
VOL. FT3=
                 70.479
CORRECTED
SAMPLE VOL.
VMSTD  SCF=
                 67.253
MOLE FRACTION
DRY GAS MD=
                  0.994
MOLECULAR WT
STACK GAS MW
LB/LB MOL=
                 28.768
AVG VELOCITY
FPM =?
              3,095.16
STACK AREA
RS SQ. IN.=
                  452.4
STACK DRY
FLOW QS  SCFM=
              9,545.85
ACFM
              9,662.70
EXCESS AIR %
             33,983.74
**********
ISOKINETIC %I=
                   97.9
*********



SORRY. YOU BLEW
IT, SCREWBALL,
BETTER LUCK
NEXT TIME.

STANDARD
CONDITIONS ARE
```

PARTICULATE SAMPLE BOX SET UP
CHECKLIST

DATE: 18 MAR 85

PLANT: Bldg 195

LOCATION: Portsmouth, NSY

PREP. BY: C. Yee

RUN NO.: TEST 3, RUN 1

STACK NO: LINE E

SAMPLE BOX NO.: 1

( ) 1. Wash all glassware with distilled water and then acetone.

( ) 2. Place approx. 100 ml distilled water in the first impinger, a modified Greenburg-Smith with straight tube 1/2 inch from the impinger bottom. Record exact weight to 1/10 of a gram.

( ) 3. Place approx. 100 ml distilled water in the second impinger, a standard Greenburg-Smith impinger (caricell tip). Record exact weight to 1/10 of a gram.

( ) 4. Impinger three is a dry modified Greenburg-Smith with straight tube 1/2 inch from the impinger bottom. Record dry tare weight to 1/10 of a gram.

( ) 5. Place approx. 175 ml of silica gel in the fourth impinger, a modified Greenburg-Smith with straight tube 1/2 inch from the impinger bottom. Record exact weight to 1/10 of a gram.

Impinger No.	Impinger weights (GRAMS)	Impinger Tare	Impinger + substance Initial	Final	Condensate	
1-1	1. 100 ml H_2O		580.7	577.8	-2.9	
1-2	2. 100 ml 0.1 N KOH		623.9	621.0	-2.9	
1-3	3. Dry		512.1	512.5	+0.4	TOTAL
1-4	4. 175 g silica gel		733.7	748.9	+15.2	8.9
~~6-2~~			604.7	603.8	-.9	

( ) 8. Assemble impinger bottles and glass elbows so air flows from a small hole to a larger hole.

11ND-CBC-3960/47 (REV. 11-78)

****
TEST IS PARTICULATE FOR
60" UPSTREAM, 12" DOWNSTREAM
24" DIAMETER ROUND STACK
##########################
DEPTHS TO INSERT PROBES
****

POINT 1 = 2 3/16"

POINT 2 = 12"

POINT 3 = 21 13/16"

****
TEST IS PARTICULATE FOR
400" UPSTREAM, 60" DOWNSTREAM
20.75" DIAMETER ROUND STACK
##########################
DEPTHS TO INSERT PROBES
****

POINT 1 = 0 15/16"

POINT 2 = 3"

POINT 3 = 6 1/ 8"

POINT 4 = 14 5/ 8"

POINT 5 = 17 3/ 4"

POINT 6 = 19 7/ 8"

VELOCITY TRAVERSE

--dP--	--SQRT dP--
0.820	0.906
0.940	0.970
0.990	0.995
1.050	1.025
1.050	1.025
1.100	1.049
0.610	0.781
0.810	0.900
0.850	0.922
1.050	1.025
1 200	1.095
1.200	1.095

dP_RMS = 0.965

Pretest Leak Checks
CNU334 = 0.015 @ 4" Hg
TP = passed
SP = passed

SOURCE EMISSIONS TESTING DATA SHEET
11ND-CBC-3960/62 (Rev. 11-78)

PLANT: B195	LOCATION: NNSY	B195 / Port 2 / Port 1	AMBIENT TEMPERATURE: 32	BAROMETRIC PRESSURE, IN HG: 29.89
OPERATOR: SJZ/FEEK	DATE: 18 Mar 85		ASSUMED MOISTURE, %: 1.3	HEATER BOX SETTING: —
RUN NO.: 1	SAMPLE BOX NO.: 1		PROBE # (PITOT #): 1 (1)	PROBE LENGTH, in.: 36
METER BOX NO.: 4	METER ΔH@: 2.0318		NOZZLE I.D. NO.: 10	NOZZLE DIAMETER, in.: .240
C FACTOR (Nomograph): —	PITOT COEFFICIENT, CP: .83	SCHEMATIC OF STACK CROSS SECTION (Show Traverse Points)	PROBE HEATER SETTING: —	PROBE LINER MATERIAL: glass / LEAK RATE (CFM) @ " HG: .0003 @ 18 in Pre-test, .0003 @ 19 in Post

TRAVERSE POINT NUMBER	SAMPLING TIME (e) MIN	GAS METER READING (V_m) ft3	STACK TEMPERATURE (T_s) °F	VELOCITY HEAD (ΔP_s) In. H_2O	PRESSURE ACROSS ORIFICE (ΔH) In. H_2O	GAS SAMPLE TEMPERATURE AT DRY GAS METER: Inlet (T min) °F	Outlet (T mout) °F	SAMPLE BOX TEMPERATURE °F	TEMPERATURE IMPINGER °F	SAMPLE VACUUM in. Hg.	CO_2 %	O_2 %
Port 1 1	0 (10:00)	604.579	44	.72	3.025 / 3.148	78	60	—	37	8.0	0%	20.9%
2	6	610.00	56	.86	3.672	98	63	—	40	10.0		
3	12	616.06	58	.93	4.034	109	66	—	41	11.0		
4	18	622.—	60	1.10	4.803	115	69	—	42	12.5		
5	24	629.44	60	1.20	5.294	121	73	—	43	16.0		
6	30	636.6—	60	1.20	5.340	126	76	—	44	20.0		
Port 2 1	36 (*)	643.035 / ~~643.85~~	44	0.75 / ~~1.06~~	3.227	68	64 / 78	—	39 / 34	4.0		
2	42	650.58	44 / 58	~~0.84~~ 0.80	3.743 / ~~3.459~~	98	65	—	39	4.0		
3	48	656.99	59	0.95	4.084	105	67	—	44	4.5		
4	54	661.37	60	0.97	4.191	109	69	—	46	4.5		
5	60	670.04	60	0.00	4.351	113	73	—	46	4.5		
6	66	676.82	62	1.00	4.350	115	76	—	46	4.5		
TOTAL	~~77~~ 1207	683.638										
AVERAGE		(683.833)										

(*) At Port change, filter & impinger #2 was changed due to high pressure drop. Leak check at glass was performed (.003 @ 19" Hg)

```
            XEQ "NOMO 2"
EPA METHOD
5 NOMOGRAPH
PROGRAM


ENTER THE
FOLLOWING
DATA AS
REQUIRED.

PUSH R/S
AFTER
EACH DATA
ENTRY.


TEST
NUMBER=?
                3.    RUN

RUN NO. ?
                1.    RUN

FILTER
NUMBER=?
                      RUN

INITIAL
METER VOL
FT3=?
          604.579     RUN
STACK
STATIC
PRESSURE
/PS/
IN. H2O=?
             -3.2     RUN
BAROMETER
PRESSURE
/PB/
IN. HG=?
            29.89     RUN
% H2O=?
              1.3     RUN
SAMPLE RATE
/QM/
CFM=?
              .75     RUN
STACK GAS
MOL WT
/MW/
LB/LB MOL=?
            28.60     RUN

AVG STACK
TEMP /TS/
DEG F=?
            50.00     RUN
```

```
AVG DELTA
P=? IN. H2O
              .965    RUN

AMBIENT
TEMP F=?
          32.0000     RUN

PITOT TUBE
COEFF
CP=?
               .83    RUN

AVG STACK
VELOCITY
            3,239.204
FPM....

IDEAL
NOZZLE
DIAMETER
INCHES
                0.212

ENTER THE
ACTUAL
NOZZLE
DIAMETER
TO BE USED
DN
INCHES...
              .242    RUN
DELTA H
AT=?
           2.0318     RUN
                2.032

ENTER THE
FOLLOWING
FOR EACH
TRAVERSE
POINT
******
DP
IN. H2O=?
PUSH STO A

TS DEG F
PUSH STO B

TM DEGR F
PUSH STO C, R/S
***
AFTER LAST
DATA POINT PUSH
0, STO A, R/S
*******

             .720 STO 01
           44.000 STO 02
           78.000 STO 03
                      RUN
```

```
THE
FOLLOWING
IS GIVEN
FOR TRANSFER
TO THE
ISOKINETIC
PROGRAM 2
/FILE 5/


VELOCITY
PARAMETER
                 20.29
AVG METER
TEMP.
DEG F=
                  105.
AVG DELTA
H=  IN. H2O
                4.177
AVG
DELTA P=
                0.961

FINAL METER
VOLUME FT3=?


        682.233     RUN
            682.233
INITIAL
METER VOL. FT3
            604.579
ABSOLUTE
STACK PRES
PS IN. HG
              29.65
AVG STACK TEMP
DEG F
                 57.
GEOMETRIC AVG
ABSOLUTE STACK
TEMP. DEG R
            516.716
STANDARD
CONDITIONS ARE
29.92126 IN. HG
68.0 DEG F
******
END PROGRAM
```

```
          %EQ "ISOKIN2"
EPA METHOD
FIVE
ISOKINETIC
PROGRAM 2

ENTER DATA
FROM THE
NOMOGRAPH
PRGM.
AS REQUESTED

TEST NO.?
              3.     RUN
RUN NO.?
              1.     RUN
FILTER NO.?
                     RUN
VELOCITY
PARAMETER KV=?
           22.29     RUN
AVG METER
TEMP TM DEG F=?
            105.     RUN
DEG R =565.

AVG DELTA H
IN. H2O=?
           4.177     RUN
AVG DELTA P
IN. H2O=?
            .961     RUN
FINAL METER
VOL. FT3=?
         682.233     RUN
INITIAL METER
VOLUME FT3=?
         604.579     RUN
ABSOLUTE
STACK PRES.
IN. HG=?
          29.650     RUN
IS THE % H2O
KNOWN?

1 = YES
1 = NO
            1.00     RUN
ATER GAIN, G=?
            8.90     RUN
% CO2 =?
            0.00     RUN
O2 =?
            0.00     CLX
           20.90     RUN
CO =?
            0.00     RUN
PITOT COEF CP=?
             .83     RUN
```

```
SAMPLE TIME
MIN =?
          72.000     RUN
NOZZLE
DIAMETER IN. =?
            .242     RUN
ROUND STACK?
1 = YES
0 = NO
           1.000     RUN
STACK DIA. IN.?
          20.750     RUN
STACK TEMP
DEG F =?
            57.0     RUN
METER CALBRTN
FACTOR G =?
         1.0103     RUN
=======
NET METER
VOL. FT3=
                 78.454
CORRECTED
SAMPLE VOL.
VMSTD  SCF=
                 72.650
MOLE FRACTION
DRY GAS MD=
                  0.994
MOLECULAR WT
STACK GAS MW
LB/LB MOL=
                 28.774
AVG VELOCITY
FPM =?
              3,245.03
STACK AREA
AS SQ. IN.=
                 338.2
STACK DRY
FLOW QS  SCFM=
              7,664.99
ACFM
              7,576.68
EXCESS AIR %
             33,983.74
**********
ISOKINETIC %I=
                  96.7
*********
```

PARTICULATE SAMPLE BOX SET UP
CHECKLIST

DATE: 18 MAR 85
PLANT: Bldg 195
LOCATION: Portsmouth NSY
PREP. BY: C Yee

RUN NO.: TEST 3, RUN 2
STACK NO: LINE A
SAMPLE BOX NO.: 4

( ) 1. Wash all glassware with distilled water and then acetone.

( ) 2. Place approx. 100 ml distilled water in the first impinger, a modified Greenburg-Smith with straight tube 1/2 inch from the impinger bottom. Record exact weight to 1/10 of a gram.

( ) 3. Place approx. 100 ml distilled water in the second impinger, a standard Greenburg-Smith impinger (caricell tip). Record exact weight to 1/10 of a gram.

( ) 4. Impinger three is a dry modified Greenburg-Smith with straight tube 1/2 inch from the impinger bottom. Record dry tare weight to 1/10 of a gram.

( ) 5. Place approx. 175 ml of silica gel in the fourth impinger, a modified Greenburg-Smith with straight tube 1/2 inch from the impinger bottom. Record exact weight to 1/10 of a gram.

Impinger No.	Impinger weights (GRAMS)	Impinger Tare	Impinger + substance Initial	Final	Condensate	
4-1	1. 100 ml H_2O		615.7	608.7	-7.0	
4-2	2. 100 ml 0.1N KOH	503.2	604.1	601.6	-2.5	
4-3	3. Dry		494.3	493.5	-0.8	TOTAL
4-4	4. 175 g silica gel		696.7	708.7	12.0	1.7

( ) 8. Assemble impinger bottles and glass elbows so air flows from a small hole to a larger hole.

11ND-CBC-3960/47 (REV. 11-78)

```
EPA METHOD
5 NOMOGRAPH
PROGRAM

ENTER THE
FOLLOWING
DATA AS
REQUIRED.

PUSH R/S
AFTER
EACH DATA
ENTRY.

TEST
NUMBER=?
                3.    RUN

RUN NO. ?
                2.    RUN

FILTER
NUMBER=?
                      RUN

INITIAL
METER VOL
FT3=?
          684.554     RUN
STACK
STATIC
PRESSURE
/PS/
IN. H2O=?
             -3.2     RUN
BAROMETER
PRESSURE
/PB/
IN. HG=?
            29.91     RUN
% H2O=?
               .6     RUN
SAMPLE RATE
/QM/
CFM=?
              .75     RUN
STACK GAS
MOL WT
/MW/
LB/LB MOL=?
           28.774     RUN

AVG STACK
TEMP /TS/
DEG F=?
            57.00     RUN

AVG DELTA
P=? IN. H2O
             .961     RUN
```

```
AMBIENT
TEMP F=?
          35.0000     RUN

PITOT TUBE
COEFF
CP=?
              .82     RUN

AVG STACK
VELOCITY
                3,204.563
FPM....

IDEAL
NOZZLE
DIAMETER
INCHES
                    0.213

ENTER THE
ACTUAL
NOZZLE
DIAMETER
TO BE USED
ON
INCHES...
             .239     RUN
DELTA H
AT=?
           2.0318     RUN
                    2.032

ENTER THE
FOLLOWING
FOR EACH
TRAVERSE
POINT
******
DP
IN. H2O=?
PUSH STO A

TS DEG F
PUSH STO B

TM DEGR F
PUSH STO C, R/S
***
AFTER LAST
DATA POINT PUSH
0, STO A, R/S
*******

              .730 STO 01
            51.000 STO 02
            69.000 STO 03
                       RUN

******
DELTA H=
                    2.810
 IN. H2O
```

```
THE
FOLLOWING
IS GIVEN
FOR TRANSFER
TO THE
ISOKINETIC
PROGRAM 2
/FILE 5/

VELOCITY
PARAMETER
                     22.69
AVG METER
TEMP.
DEG F=
                      105.
AVG DELTA
H=  IN. H2O
                     4.004
AVG
DELTA P=
                     0.987

FINAL METER
VOLUME FT3=?
          761.962    RUN
                   761.962
INITIAL
METER VOL. FT3
                   684.554
ABSOLUTE
STACK PRES
PS IN. HG
                     29.67
AVG STACK TEMP
DEG F
                       61.
GEOMETRIC AVG
ABSOLUTE STACK
TEMP. DEG R
                   521.319
STANDARD
CONDITIONS ARE
29.92126 IN. HG
68.0 DEG F
```

```
EPA METH.
FIVE
ISOKINETIC
PROGRAM 2

ENTER DATA
FROM THE
NOMOGRAPH
PRGM.
AS REQUESTED

TEST NO.?
                3.     RUN
RUN NO.?
                2.     RUN
FILTER NO.?
                       RUN
VELOCITY
PARAMETER KV=?
            22.69      RUN
AVG METER
TEMP TM DEG F=?
             105.      RUN
DEG R =565.

AVG DELTA H
IN. H2O=?
            4.004      RUN
AVG DELTA P
IN. H2O=?
             .987      RUN
FINAL METER
VOL. FT3=?
          761.962      RUN
INITIAL METER
VOLUME FT3=?
          684.554      RUN
ABSOLUTE
STACK PRES.
IN. HG=?
           29.670      RUN
            29.67      RUN
IS THE % H2O
KNOWN?

0 = YES
1 = NO
             1.00      RUN
WATER GAIN, G=?
             1.70      RUN
% CO2 =?
             0.00      RUN
%O2 =?
            20.90      RUN
%CO =?
             0.00      RUN
PITOT COEF CP=?
             0.00      CLX
              .82      RUN
SAMPLE TIME
MIN =?
           72.000      RUN
NOZZLE
DIAMETER IN. =?
             .239      RUN
ROUND STACK?
1 = YES
0 = NO
            1.000      RUN
STACK DIA. IN.?
           20.750      RUN
AVG STACK TEMP
DEG F =?
             61.0      RUN
METER CALBRTN
FACTOR G =?
          1.0103       RUN
=======
NET METER
VOL. FT3=
                     78.285
CORRECTED
SAMPLE VOL.
VMSTD  SCF=
                     72.469
MOLE FRACTION
DRY GAS MD=
                      0.999
MOLECULAR WT
STACK GAS MW
LB/LB MOL=
                     28.824
AVG VELOCITY
FPM =?
                  3,259.52
STACK AREA
AS SQ. IN.=
                      338.2
STACK DRY
FLOW @S  SCFM=
                  7,659.95
ACFM
                  7,646.04
EXCESS AIR %
                 33,983.74
**********
ISOKINETIC %I=
                       98.7
*********
```

PARTICULATE SAMPLE BOX SET UP
CHECKLIST

DATE: _____

PLANT: Bldg 195

LOCATION: Portsmouth NSY

PREP. BY: C. Yee

RUN NO.: Test 3, Run 3

STACK NO: _____

SAMPLE BOX NO.: 6

( ) 1. Wash all glassware with distilled water and then acetone.

( ) 2. Place approx. 100 ml distilled water in the first impinger, a modified Greenburg-Smith with straight tube 1/2 inch from the impinger bottom. Record exact weight to 1/10 of a gram.

( ) 3. Place approx. 100 ml distilled water in the second impinger, a standard Greenburg-Smith impinger (caricell tip). Record exact weight to 1/10 of a gram.

( ) 4. Impinger three is a dry modified Greenburg-Smith with straight tube 1/2 inch from the impinger bottom. Record dry tare weight to 1/10 of a gram.

( ) 5. Place approx. 175 ml of silica gel in the fourth impinger, a modified Greenburg-Smith with straight tube 1/2 inch from the impinger bottom. Record exact weight to 1/10 of a gram.

Impinger No.	Impinger weights (GRAMS)	Impinger Tare	Impinger + substance Initial	Final	Condensate	
6-1	1. 100 ml H_2O		604.1	596.2	-7.9	
7-2	2. 100 ml .1N KOH		593.3	590.7	-2.6	
6-3	3. Dry		483.1	483.0	-0.1	TOTAL
6-4	4. 175 g silica gel		695.4	709.4	+14.0	3.4

( ) 8. Assemble impinger bottles and glass elbows so air flows from a small hole to a larger hole.

11ND-CBC-3960/47 (REV. 11-78)

SOURCE EMISSIONS TESTING DATA SHEET
1100-CBC-3960/62 (Rev. 11-78)

PRETEST LEAK CHECK Nozzle = 0.4 @ 3"
SP = Passed
PP = Passed

PLANT: B-195	LOCATION: NNSY		AMBIENT TEMPERATURE: ~~40~~ 45	BAROMETRIC PRESSURE, IN HG: 29.89
OPERATOR: JZ/FCEC	DATE: 18 MAR		ASSUMED MOISTURE, %: 0.6	HEATER BOX SETTING: —
RUN NO.: 3	SAMPLE BOX NO.: 16		PROBE # (PITOT #): 1 (1)	PROBE LENGTH, in.: 36
METER BOX NO.: 4	METER ΔH@: 2.0318		NOZZLE I.D. NO.: 10	NOZZLE DIAMETER, in.: .2395
C FACTOR (Nomograph): —	PITOT COEFFICIENT, CP: 0.83		PROBE HEATER SETTING: —	PROBE LINER MATERIAL: Quartz
				LEAK RATE (CFM) @ " HG: 0.004 @ 19"

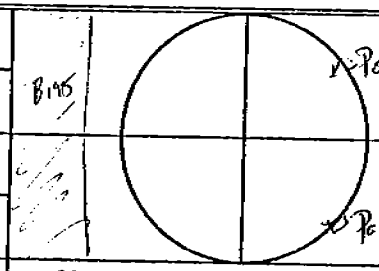

SCHEMATIC OF STACK CROSS SECTION (Show Traverse Points)

TRAVERSE POINT NUMBER	SAMPLING TIME (θ) MIN	GAS METER READING (V_m) ft³	STACK TEMPERATURE (T_s) °F	VELOCITY HEAD (ΔP_s) In. H_2O	PRESSURE ACROSS ORIFICE (ΔH) In. H_2O	GAS SAMPLE TEMPERATURE AT DRY GAS METER: Inlet (T min) °F	Outlet (T mout) °F	SAMPLE BOX TEMPERATURE °F	TEMPERATURE IMPINGER °F	SAMPLE VACUUM in. Hg.	CO_2 %	O_2 %
Port 1 1	0 / 3:40	762.562	46	.57	2.277	66	61	—	42	3.0	0%	20.9%
2	6	767.—	49	.80	3.297	86	62	—	43	4.5		
3	12	772.89	69	.86	3.492	99	64	—	48	5.0		
4	18	778.9—	78	1.05	4.259	108	67	—	52	5.5		
5	24	785.—	78	1.10	4.509	114	71	—	53	6.0		
6	30	792.2—	79	1.15	4.738	118	74	—	54	6.0		
Port 2 1	36 / 4:20	799.504	68	0.67	2.681	90	75	—	46	4.0		
2	42	804.8—	69	0.85	3.488	105	76	—	51	4.5		
3	48	810.80	73	0.93	3.841	113	77	—	53	5.0		
4	54	817.21	79	0.99	4.072	117	79	—	53	5.5		
5	60	823.80	79	1.05	4.334	119	80	—	53	5.5		
6	66	830.58	79	1.02	4.224	121	82	—	53	5.5		
TOTAL	72	837.356						—				
AVERAGE								—				

Post test @ Nozzle = 0.06 @ 8½"
@ glass = 0.006 @ 12"

B-63

```
EPA METHOD
5 NOMOGRAPH
PROGRAM

ENTER THE
FOLLOWING
DATA AS
REQUIRED.

PUSH R/S
AFTER
EACH DATA
ENTRY.

TEST
NUMBER=?
          3.000    RUN

RUN NO. ?
          3.000    RUN

FILTER
NUMBER=?
                   RUN

INITIAL
METER VOL
FT3=?
        762.562    RUN
STACK
STATIC
PRESSURE
/PS/
IN. H2O=?
         -3.200    RUN
BAROMETER
PRESSURE
/PB/
IN. HG=?
          9.000    CLX
         29.890    RUN
% H2O=?
           .600    RUN
SAMPLE RATE
/QM/
CFM=?
           .750    RUN
STACK GAS
MOL WT
/MW/
LB/LB MOL=?
         28.824    RUN

AVG STACK
TEMP /TS/
DEG F=?
         61.00     RUN

AVG DELTA
H=? IN. H2O
           .987    RUN
```

TEST 3
RUN 3

```
AMBIENT
TEMP F=?
         45.0000   RUN

PITOT TUBE
COEFF
CP=?
            .83    RUN

AVG STACK
VELOCITY
              3,298.169
FPM....

IDEAL
NOZZLE
DIAMETER
INCHES
                   0.289

ENTER THE
ACTUAL
NOZZLE
DIAMETER
TO BE USED
ON
INCHES...
           .2395   RUN
DELTA H
AT=?
         2.0318    RUN
                   2.032

ENTER THE
FOLLOWING
FOR EACH
TRAVERSE
POINT
******
DP
IN. H2O=?
PUSH STO A

TS DEG F
PUSH STO B

TM DEGR F
PUSH STO C, R/S
***
AFTER LAST
DATA POINT PUSH
0, STO A, R/S
*******

THE
FOLLOWING
IS GIVEN
FOR TRANSFER
TO THE
ISOKINETIC
PROGRAM 2
/FILE 5/

VELOCITY
PARAMETER
                  22.81
AVG METER
TEMP.
DEG F=
                  105.
AVG DELTA
H=  IN. H2O
                  3.769
AVG
DELTA P=
                  0.912

FINAL METER
VOLUME FT3=?
        837.356   RUN
                 837.356
INITIAL
METER VOL. FT3
                 762.562
ABSOLUTE
STACK PRES
PS IN. HG
                  29.65
AVG STACK TEMP
DEG F
                   71.
GEOMETRIC AVG
ABSOLUTE STACK
TEMP. DEG R
                 530.381
STANDARD
CONDITIONS ARE
29.92126 IN. HG
68.0 DEG F
******
```

```
FIVE
ISOKINETIC
PROGRAM 2

ENTER DATA
FROM THE
NOMOGRAPH
PRGM.
AS REQUESTED

TEST NO.?
              3.    RUN
RUN NO.?
              3.    RUN
FILTER NO.?
                    RUN
VELOCITY
PARAMETER KV=?
          22.01     RUN
AVG METER
TEMP TM DEG F=?
           105.     RUN
DEG R =565.

AVG DELTA H
IN. H2O=?
          3.768     RUN
AVG DELTA P
IN. H2O=?
           .912     RUN
FINAL METER
VOL. FT3=?
        837.356     RUN
INITIAL METER
VOLUME FT3=?
        762.562     RUN
ABSOLUTE
STACK PRES.
IN. HG=?
         29.650     RUN
IS THE % H2O
KNOWN?

0 = YES
1 = NO
           1.00     RUN
WATER GAIN, G=?
           3.40     RUN
% CO2 =?
           0.00     RUN
%O2 =?
          20.90     RUN
%CO =?
           0.00     RUN
PITOT COEF CP=?
            .83     RUN
           .830     RUN
```

```
SAMPLE TIME
MIN =?
         72.000     RUN
NOZZLE
DIAMETER IN. =?
          .2395     RUN
ROUND STACK?
1 = YES
0 = NO
          1.000     RUN
STACK DIA. IN.?
         20.750     RUN
         20.750     RUN
AVG STACK TEMP
DEG F =?
           71.0     RUN
METER CALBRTN
FACTOR G =?
         1.0103     RUN
=======
NET METER
VOL. FT3=
                 75.564
CORRECTED
SAMPLE VOL.
VMSTD  SCF=
                 69.974
MOLE FRACTION
DRY GAS MD=
                  0.998
MOLECULAR WT
STACK GAS MW
LB/LB MOL=
                 28.811
AVG VELOCITY
FPM =?
              3,202.18
STACK AREA
AS SQ. IN.=
                 338.2
STACK DRY
FLOW QS  SCFM=
              7,389.99
ACFM
              7,502.66
EXCESS AIR %
             33,983.74
**********
ISOKINETIC %I=
                  98.7
*********
```

APPENDIX C
LABORATORY RESULTS

the bionetics corporation
ANALYTICAL LABORATORIES

20 RESEARCH DRIVE
HAMPTON, VIRGINIA 23666
TELEPHONE: (804) 865-0880

REPORT OF ANALYSIS

TO: Receiving Officer
Naval Construction Battalion Center
Port Hueneme, CA 93043-5000
Attn: Bill Powers, NEESA

DATE: April 8, 1985

Line 65 Bld. 195
MARKED As Indicated

REC'D: March 18, 1985

SAMPLE I D	CODE	Total Chromium, mg/l	Sample Solution Volume (mL.)	Hexavalent Chromium, mg/l	Total Cr collected (mg)
Probe Wash-In. Test1/Run1	39664	1.80	356.3	1.40	0.641
mg/FILT. Filter-In. Test1/Run1	39665	0.040	—	0.032	0.040
Impinger-In. Test1/Run1	39666	0.049	345.1	0.011	0.017
Probe Wash-Out Test1/Run1	39667	0.100	141.3	0.004	0.014
mg/FILT Filter-Out Test1/Run1	39668	0.023	—	0.018	0.023
Impinger-Out Test1/Run1	39669	0.042	380.8	0.008	0.016
Probe Wash-In. Test1/Run2	39670	3.80	322.0	2.83	1.224
mg/FILT Filter-In. Test1/Run2	39671	0.054	—	0.047	0.054
Impinger-In. Test1/Run2	39672	0.058	258.8	0.008	0.015

SEE REVERSE SIDE FOR EXPLANATION OF SYMBOLS AND ABBREVIATIONS

ALL PENCILED-IN COMMENTS ARE RESULT OF CONVERSATION WITH BIONETICS LAB MANAGER ON 24 APR 85
-B.P.

RESPECTFULLY SUBMITTED,

J.B. (JIM)

Water, Wastewater, Hazardous Waste, and Chemical-Bacteriological Analysis

the bionetics corporation
ANALYTICAL LABORATORIES

20 RESEARCH DRIVE
HAMPTON, VIRGINIA 23666
TELEPHONE: (804) 865-0880

REPORT OF ANALYSIS

TO: Receiving Officer
Naval Construction Battalion Center
Port Hueneme, CA 93043-5000
Attn: Bill Powers, NEESA

DATE: April 8, 1985

Line 65 Bld. 195
MARKED As Indicated

REC'D: March 18, 1985

SAMPLE I D	CODE	Chromium, mg/l	SAMPLE SOLUTION VOL. (ml.)	Hexavalent Chromium, mg/l	TOTAL Cr COLLECTED (mg)
Probe Wash-Out Test1/Run2	39673	0.140	132.5	0.005	0.019
mg/FILT. Filter-Out Test1/Run2	39674	0.028	—	0.022	0.028
Impinger-Out Test1/Run2	39675	0.049	301.0	0.011	0.015
Probe Wash-In. Test1/Run3	39676	8.00	196.7	6.60	1.574
mg/FILT. Filter-In. Test1/Run3	39677	0.030	—	0.021	0.030
Impinger-In. Test1/Run3	39678	0.037	261.6	0.005	0.010
Probe Wash-Out Test1/Run3	39679	0.042	214.5	0.005	0.009
mg/FILT. Filter-Out Test1/Run3	39680	0.021	—	0.017	0.021
Impinger-Out Test1/Run3	39681	0.035	294.4	0.005	0.010

SEE REVERSE SIDE FOR EXPLANATION OF SYMBOLS AND ABBREVIATIONS

RESPECTFULLY SUBMITTED,

(Jim) J.B.

the bionetics corporation
ANALYTICAL LABORATORIES

20 RESEARCH DRIVE
HAMPTON, VIRGINIA 23666
TELEPHONE: (804) 865-0880

REPORT OF ANALYSIS

TO: Receiving Officer
Naval Construction Battalion Center
Port Hueneme, CA 93043-5000
Attn: Bill Powers, NEESA

DATE: April 8, 1985

Line E; Bld. 195
MARKED As Indicated

REC'D: March 18, 1985

DIVIDE ALL Cl & NO3 BY 2 FOR CORRECT mg/FILT — LAB MANAGER 4/24/85

SAMPLE I D	CODE	Chloride mg/l	Total mg	Nitrate-N, mg/l	Total (mg)	Sodium, mg/l	Total (mg)	Aluminum, mg/l	
Probe Wash-In. Test2/Run2	39695	290.0	57.0	0.118	0.023	0.60	0.118	0.2	0.039
mg/FILT Filter-In. Test2/Run2	39696	~~21.8~~	10.9	~~0.070~~	0.035	5.0		<0.1	
Impinger-In. Test2/Run2	39697	1340.0	353.9	0.221	0.06	1.7	0.45	0.2	0.05
Probe Wash-Out Test2/Run2	39698	771.0	92.0	0.169	0.02	0.6	0.01	0.2	0.02
mg/FILT. Filter-Out Test2/Run2	39699	~~92.0~~	46.0	~~0.128~~	0.063	6.0		0.6	
Impinger-Out Test2/Run2	39700	4.8	1.3	0.010	0.001	1.6	0.42	0.2	0.05
Probe Wash-In. Test2/Run3	39701	37.9	12.6	0.010	0.003	0.3	0.1	–	–
mg/FILT. Filter-In. Test2/Run3	39702	~~16.3~~	8.2	~~0.032~~	0.016	5.0		–	
Impinger-In. Test2/Run3	39703	997.0	227.2	0.147	0.03	1.8	0.41	–	–

SEE REVERSE SIDE FOR EXPLANATION OF SYMBOLS AND ABBREVIATIONS

RESPECTFULLY SUBMITTED,

the bionetics corporation
ANALYTICAL LABORATORIES

20 RESEARCH DRIVE
HAMPTON, VIRGINIA 23666
TELEPHONE: (804) 865-0880

REPORT OF ANALYSIS

TO: Receiving Officer
Naval Construction Battalion Center
Port Hueneme, CA 93043-5000
Attn: Bill Powers, NEESA

DATE: April 8, 1985

Line E; Bld. 195
MARKED As Indicated

REC'D: March 18, 1985

SAMPLE I D	CODE	Chloride mg/l		Nitrate-N, mg/l		Sodium, mg/l	Aluminum, mg/l	
Probe Wash-Out Test2/Run3	39704	45.0	7.3	0.014	0.002	0.40	0.07	-
mg/FILT Filter-Out Test2/Run3	39705	~~15.7~~	7.8	~~<0.002~~	<0.001	5.0		-
Impinger-Out Test2/Run3	39706	942.0	234.1	0.169	0.04	1.7	0.42	-
Probe Wash-In. Test2/Run4	39707	4.9	1.3	0.014	0.004	0.2	0.005	-
mg/FILT Filter-In. Test2/Run4	39708	~~9.5~~	4.7	~~0.118~~	0.059	4.0		-
Impinger-In. Test2/Run4	39709	21.1	4.5	0.088	0.02	1.3	0.28	-
Probe Wash-Out Test2/Run4	39710	7.5	0.8	0.006	0.001	0.3	0.03	-
mg/FILT Filter-Out Test2/Run4	39711	~~10.2~~	5.1	~~0.100~~	0.050	4.0		-
Impinger-Out Test2/Run4	39712	24.2	4.1	0.139	0.020	1.3	0.20	-

SEE REVERSE SIDE FOR EXPLANATION OF SYMBOLS AND ABBREVIATIONS

RESPECTFULLY SUBMITTED,

the bionetics corporation
ANALYTICAL LABORATORIES

20 RESEARCH DRIVE
HAMPTON, VIRGINIA 23666
TELEPHONE: (804) 865-0880

REPORT OF ANALYSIS

TO: Receiving Officer
Naval Construction Battalion Center
Port Hueneme, CA 93043-5000
Attn: Bill Powers, NEESA

DATE: April 8, 1985

MARKED As Indicated

REC'D: March 20, 1985

SAMPLE I D	CODE	Cadmium, mg/l	TOTAL (mg)	Cyanide, mg/l	TOTAL (mg)
Probe Wash 3-1	39813	0.0070	0.001	1.070	0.170
Filter 3-1	39814	0.0004	0.0004	0.003	0.003
Impinger 3-1	39815	0.0004	0.0001	1.347	0.345
Probe Wash 3-2	39816	0.0070	0.001	0.995	0.151
Filter 3-2	39817	0.0003	0.0003	0.003	0.003
Impinger 3-2	39818	<0.0001	—	1.744	0.349
Probe Wash 3-3	39819	0.0150	0.0030	1.683	0.281
Filter 3-3	39820	0.0003	0.0003	0.017	0.017
Impinger 3-3	39821	0.0004	0.0001	0.940	0.189

SEE REVERSE SIDE FOR EXPLANATION OF SYMBOLS AND ABBREVIATIONS

RESPECTFULLY SUBMITTED,

Water, Wastewater, Hazardous Waste, and Chemical-Bacteriological Analysis

the bionetics corporation
ANALYTICAL LABORATORIES

20 RESEARCH DRIVE
HAMPTON, VIRGINIA 23666
TELEPHONE: (804) 865-0880

REPORT OF ANALYSIS

TO: Receiving Officer
Naval Construction Battalion Center
Port Hueneme, CA 93043-5000
Attn: Bill Powers, NEESA

DATE: April 8, 1985

Line E; Bld. 195
MARKED As Indicated

REC'D: March 18, 1985

SAMPLE I D	CODE	Chloride mg/l	Nitrate-N,mg/l	Sodium,mg/l	Aluminum,mg/l
Tank 30 HCl	39713	34,000	-	-	-
Tank 28 HNO_3	39714	-	132,800	-	-
Tank 26 NaOH	39715	-	-	41,000	-

SEE REVERSE SIDE FOR EXPLANATION OF SYMBOLS AND ABBREVIATIONS

RESPECTFULLY SUBMITTED,

the bionetics corporation
ANALYTICAL LABORATORIES

20 RESEARCH DRIVE
HAMPTON, VIRGINIA 23666
TELEPHONE: (804) 865-0880

REPORT OF ANALYSIS

TO: Receiving Officer
Naval Construction Battalion Center
Port Hueneme, CA 93043-5000
Attn: Bill Powers, NEESA

DATE: April 8, 1985

Line 65 Bld. 195
MARKED As Indicated

REC'D: March 18, 1985

SAMPLE I D	CODE	Chromium,mg/l	Hexavalent Chromium,mg/l
Hard Cr Plating Sol'n. TK 65	39682	100,000	100,000

SEE REVERSE SIDE FOR EXPLANATION OF SYMBOLS AND ABBREVIATIONS

RESPECTFULLY SUBMITTED,

the bionetics corporation
ANALYTICAL LABORATORIES

20 RESEARCH DRIVE
HAMPTON, VIRGINIA 23666
TELEPHONE: (804) 865-0880

REPORT OF ANALYSIS

TO: Receiving Officer
Naval Construction Battalion Center
Port Hueneme, CA 93043-5000
Attn: Bill Powers, NEESA

DATE: April 8, 1985

Bld. 195
MARKED: Blanks

REC'D: March 18, 1985

SAMPLE I D	pH	Cr^6	Tot. Cr	Cl	NO^3	CN^-	Na	Al
#1 Water 39660	5.5	20.5	25.0	-	0.010	<0.001	-	-
#2 Water 39661	6.2	40.0	41.0	-	0.006	<0.001	79.0	<0.10
#3 Water 39662	6.0	<0.001	-	-	<0.002	<0.001	-	-
#4 KOH 39663	>12.0	<0.001	0.13	1.1	0.019	<0.001	3.3	<0.10

All data in mg/l except pH
Missing Chloride data is due to insufficient quantity of sample.

SEE REVERSE SIDE FOR EXPLANATION OF SYMBOLS AND ABBREVIATIONS

RESPECTFULLY SUBMITTED,

Explanation of Symbols and Abbreviations

1. < - "less than". The number following the sign is the smallest amount which can be detected using this specific test.

2. > - "greater than". The number following the sign is the highest amount which can be detected using this specific test.

3. *°C and °F* - "degrees of temperature"; Celsius and Fahrenheit respectively.

4. % - "percent or part per hundred". When followed by the designation "by weight" it means grams per hundred grams. If followed by the designation "by volume" it refers to volume per unit volume, e.g., milliliters per hundred millliliters.

5. **Cal** - (diet) Calories.

6. **CP Units** - "Cobalt-Chloroplatinate Units" - Used in reporting color of aqueous solution.

7. **fib** > 5um/ml - "fiber greater than 5 microns in length, per ml".

8. **g** - "gram(s)". The unit of weight used in the metric system. One gram equals about 1/28th of an ounce.

9. **kg** - "kilogram(s)". One kilogram is 1000 grams.

10. **l** - "liter(s)". The unit of volume used in the metric system.

11. **lb** - pound(s).

12. **m3** - "cubic meter(s)". Usually used as a volume unit in air analyses.

13. **meg** - "milliequivalents." A chemical term meaning 1/1000 of the equivalent weight of a substance or element.

14. **MF** - "Membrane Filteration". Method used for certain bacteriological tests in which results indicate colony counts after sample has been filtered through a 0.45 um filter.

15. **mg** - "milligram(s)". One milligram is 1/1000 of a gram.

16. **mg/1** - "milligrams per liter". Equals "parts per million" (ppm) for aqueous liquids.

17. **ml** - "milliliter(s)". One mililiter is 1/1000 of a liter.

18. **MPN** - "Most Probable Number". Analytical method used for certain bacteriological tests in which bacteria are calculated from a statistical formula related to the bacterial count observed in a series of dilutions of the sample.

19. **N.D.** - "none detected". Usually used when the limits of detection of the method have not been definitely established.

20. **NTU** - "Nephelometric Turbidity Units".

21. **ppb** - "Parts per Billion". One ppb is 1/1000 of a ppm.

22. **ppm** - "Parts Per Million". One ppm is equivalent to one microgram per gram (ug/g), or one gram per million grams (g/kg). For aqueous liquids **ppm** equates to milligrams per liter (mg/1), because one liter of water has a weight very close to a kilogram. For gases or vapors, one ppm is equivalent to one microliter of gas per liter of gas (ul/l).

23. **TNTC** - "Too Numerous To Count". Indicates in certain bacteriological tests that the test has run "off scale".

24. **ug** - "microgram(s)". One-millionth of a gram.

25. **ug/g** - "microgram per gram". Equals "parts per million" (ppm) for solids and sludges.

26. **ul** - "microliter(s)". One microliter is 1/1000 of a milliliter or one-millionth of a liter.

27. **ul/l** - "microliter of gas per liter". Equals "part per million" (ppm) for gases or vapors.

28. **um** - "micrometer". One micrometer is 1/1,000,000 of a meter

29. **umhos/cm** - "micromhos/cm". Used in reporting specific conductance of solutions.

Be aware; an important step in a chemical or microbiological analysis is the collection of the sample. Unless the sample analyzed is truly representative of the bulk of material involved, the test results will be meaningless. If you have questions regarding the proper sampling techniques, please contact us. We cannot be held responsible for sample integrity, unless sampling has been performed by a member of our staff.

the bionetics corporation
ANALYTICAL LABORATORIES

20 RESEARCH DRIVE
HAMPTON, VIRGINIA 23666
TELEPHONE: (804) 865-0880

REPORT OF ANALYSIS

TO: Receiving Officer
Naval Construction Battalion Center
Port Hueneme, CA 93043-5000
Attn: Bill Powers, NEESA

DATE: April 8, 1985

Filters
Line 65 Bld. 195
MARKED As Indicated

REC'D: March 18, 1985

SAMPLE I D		CODE	Total Chromium/Filter
Impactor #1			
	Stage 1	38683	0.120
	Stage 2	38684	0.038
	Stage 3	38685	0.160
	Stage 4	38686	0.041
	Stage 5	38687	0.012
	Stage 6	38688	0.010
Impactor #2			
	Stage 1	38689	0.550
	Stage 2	38690	0.140
	Stage 3	38691	0.250
	Stage 4	38692	0.070
	Stage 5	38693	0.018
	Stage 6	38694	0.015

SEE REVERSE SIDE FOR EXPLANATION OF SYMBOLS AND ABBREVIATIONS

RESPECTFULLY SUBMITTED,

SNO NNSY 4730.31 (Rev. 7-79)

Report NNSY 4730-26

[redacted]

868952 thru

Refer To File No. 868971

Folder No.

20 samples

NORFOLK NAVAL SHIPYARD
PORTSMOUTH, VA.

CHEMICAL LABORATORY

REPORT OF CHEMICAL ANALYSIS

Run 1 - Line 65 Hard Chrome (1 Tank)
Run 2 - Line E HCl, NO_3^-, Caustic (3 Tanks)
Run 3 - Line A Zn, Cu, Cd, Brass (5 Tanks)

The sample marked NNSY Plating Shop Bldg. 195

Call No. N/A Contract No. N/A

For Naval Energy & Environmental Support Activity Supplied by Naval Energy & Environmental Support Activity

has been examined per 134.2-P-28, 134.2-P-21, 134.2-P-27, 134.2-P-17 Request with the following results:

Sample I.D.	$Cr_{(TOTAL)}$ ppm	Cr^{VI}, ppm	Cl^- ppm	NO_3^-, ppm	Na^+ ppm	Al, ppm	pH	$CN^-_{(TOTAL)}$ ppm	Cu, ppm	Zn, ppm
3/13 1-1 IN	<0.010	<0.010	—	—	—	<0.50	—	—	—	—
3/13 1-1 OUT	0.026	<0.010	—	—	—	<0.50	—	—	—	—
1-2 IN	<0.010	<0.010	—	—	—	<0.50	—	—	—	—
1-2 OUT	0.021	<0.010	—	—	—	<0.50	—	—	—	—
3/14 1-3 IN	<0.010	<0.010	—	—	—	<0.50	—	—	—	—
3/14 1-3 OUT	0.014	<0.010	—	—	—	<0.50	—	—	—	—
2-2 IN	—	—	1350	4.8	5.3	—	—	—	—	—
3/15 2-2 OUT	—	—	<0.35	3.3	4.7	—	—	—	—	—
3/15 2-3 IN	—	—	994	3.6	5.3	—	—	—	—	—
2-3 OUT	—	—	852	3.2	3.3	—	—	—	—	—
2-4 IN	—	—	11.4	1.6	3.9	—	—	—	—	—
3/16 2-4 OUT	—	—	19.9	1.6	3.6	—	—	—	—	—
#1 Blank	10.50	19.0	—	0.59	14.9	<5.0	6.56	—	—	—
#2 Blank	21.80	47.0	—	2.3	61	<5.0	6.82	—	—	—
#3 Blank	<0.010	<0.010	<0.35	0.56	<0.10	<0.50	6.93	—	—	—
#4 Blank	<0.010	<0.010	<0.35	2.0	6.5	0.60	12.73	—	—	—
3-1	—	—	—	—	—	—	—	4.67	<0.10	<0.10
3/18 3-2	—	—	—	—	—	—	—	6.67	<0.10	<0.10
3/18 3-3	—	—	—	—	—	—	—	0.511	<0.10	<0.10

REPORTED
MAR 26 1985
CHEMICAL LABY
NAVSHIPYDNORVA

Chemist

The person designated to sign for an action verifies, based on personal observation, and certifies by his signature that the action has actually been performed in accordance with the specified requirements.

CC: Code 134.2
Code 441.31 - White
Code 3880 - Peterson

MASS EMISSIONS SAMPLE WEIGHTS

13 MARCH 85 Line 65 Chrome

Test 1, Run 1, Inlet	41.5 gm	IMPINGER	563.1 - 218.0	345.
Test 1, Run 1, Outlet	41.3 gm	IMPINGER	598.5 - 217.7	
Test 1, Run 1, Inlet	41.1	(line 65) PROBE WASH	397.4	356.
" " Outlet	39.7	PROBE WASH	181.0	
" " Inlet	86.8	FILTER (-6 gm, FILT)	141.5	48.
" " Outlet	86.3	FILTER (-6 gm, FILT)	153.1	

14 MARCH 85

			After	tare	Net
Test 1 Run 2	Inlet	Probe Wash	363.4	41.4	322.0
		Filter	139.0	86.3	46.7 (-6 gm
		Impingers	522.1	39.5	482.6 - 223.8 = 25
	Outlet	Probe Wash	171.3	38.8	132.5
		Filter	192.3	86.9	99.4
		Impingers	537.4	40.2	497.2 - 196.2 = 3

Filter wt. 6.0 grams each

14 MARCH '85

Test 1, Run 3		After	tare	Net
INLET,	Probe Wash	235.2	38.5	196.7
	Filter	130.1	86.2	37.9 (-6 gm
	Impinger	557.1	40.5	516.6 - 255. = 2
Outlet	Probe Wash	254.6	40.1	214.5
	Filter	120.7	86.8	27.9 (-6.g
	Impinger	529.2	39.0	490.2 - 195.8 = 2

15 March 1985

Test 2 Run 1

		After	tare		
Outlet	Probe wash	128.2	40.3		87.9
	filter	137.3	86.2	(-6gm)	45.1
	Impinger	540.6	39.4		501.2

Test 2 Run 2

		After	Tare		
Inlet	Probe wash	236.0	39.4		196.6
	filter	98.7	87.0	(-6gm)	5.7
	Impinger	522.7	40.5	482.2 - 213.1	264.1
Outlet	Probe wash	160.2	40.9		119.3
	filter	132.7	86.7	(-6gm)	40.0
	Impinger	540.3	39.4	500.9 - 237.0	263.9

Test 2 Run 3

		After	Tare		
Inlet	Probe wash	373.7	38.9		334.8
	Filter	92.1	86.0	(-6gm)	0.1
	Impinger	502.6	38.8	463.8 - 235.9	227.9
Outlet	Probe wash	200.8	39.0		161.8
	Filter	115.2	86.4		28.8
	Impinger	495.1	40.6	454.5 - 206.0	248.5

Water Samples

1 0.1 gram NaCl and 0.1 K_2CrO_4 per liter

2 0.2 gram NaCl and 0.2 K_2CrO_4 per liter

16 March 85

Test 2 Run 4

		After	tare	
Inlet	Probe Wash	301.5	39.7	261.8
	Filter	133.2	85.9 (-6gm)	[illegible]
	Impinger	344.1	40.5	211.7
		303.6 - 91.9		
Outlet	Probe Wash	152.5	39.7	112.8
	Filter	100.6	86.6 (-6gm)	[illegible]
	Impinger	308.6	40.5	[illegible]
		208.1 - 100.0		

		After	tare	NET
Test 3	Run 1			
	Probe Wash	197.0	39.9	157.1
	Filter	121.2	86.4 (-6 gm)	28.8
	Impinger*	485.9	38.4 (447.5 - 191.5)	256.0
	Impinger (NAVY LAB)	231.2	39.7	191.5
Test 3	Run 2			
	Probe Wash	191.9	40.3	151.6
	Filter	115.0	85.8 (-6 gm)	23.2
	Impinger*	361.8	38.8 (323.0 - 122.9)	200.1
	Impinger (NAVY LAB)	161.6	38.7	122.9
Test 3	Run 3			
	Probe Wash	207.6	40.5	167.1
	Filter	129.4	86.5 (-6 gm)	36.9
	Impinger*	372.1	40.2 (331.9 - 130.7)	201.2
	Impinger (NAVY LAB)	171.1	40.4	130.7

* TOTAL Wt for Impinger liquid. portions then Transferred To other containers for the Navy Chem. Lab.

To NAVY LAB

Impinger Washes

		After	tare	NET
1-1	Inlet	256.9	38.9	218.0
1-1	out	258.4	40.7	217.7
1-2	IN	264.2	40.4	223.8
1-2	Out	235.1	38.9	196.2
1-3	IN	295.5	40.5	255.0
1-3	Out	236.1	40.3	195.8
2-2	IN	257.0	38.9	218.1
2-2	Out	275.8	38.8	237.0
2-3	IN	276.0	40.1	235.9
2-3	Out	244.5	38.5	206.0
2-4	IN	132.8	40.9	91.9
2-4	OUT	138.2	38.2	100.0

KOH BLANK
WATER "

#1
#2

5ND NNSY 10320/2 (4-79)

NORFOLK NAVAL SHIPYARD

PORTSMOUTH, VIRGINIA
(3 Samples)
CHEMICAL LABORATORY

REPORT OF CHEMICAL ANALYSIS (GENERAL)

REFER TO: FILE NO. FOLDER NO. SAMPLE RECEIVED 3/14/85

SAMPLE MARKED: Chromium Plating Solutions

CALL NO.: NA CONTRACT REQN. NO.: NA

REFERRED BY: Production Officer

SUPPLIED BY: Shop 31-C

HAS BEEN EXAMINED PER WITH THE FOLLOWING RESULTS: P.I. 0031-457

	Hard Tank		
	#2	#6	#5
Chromic Acid, oz./gal.	34.8	32.1	32.5
Trivalent Chromium-oz./gal.	0.2	0.1	0.4
Sulfate-oz./gal.	0.36	0.32	0.31
Ratio CrO_3 / SO_4	97:1	100:1	105:1

THIS MATERIAL IS IN ACCORDANCE WITH THE CHEMICAL REQUIREMENTS OF THE ABOVE MENTIONED SPECIFICATION EXCEPT

Solutions are satisfactory

REPORT TO:
ORIGINAL -

Code 134.2
COPY -

J.W. McDaniel
CHIEF CHEMIST

3/15/85
DATE

NAVY - GATLING BUSINESS FORMS CO., INC., NORFOLK, VA

5ND NNSY 10320/2 (4-79)

NORFOLK NAVAL SHIPYARD

PORTSMOUTH, VIRGINIA
(1 Sample)
CHEMICAL LABORATORY

REPORT OF CHEMICAL ANALYSIS (GENERAL)

REFER TO: FILE NO. 864812 FOLDER NO. SAMPLE RECEIVED: 2-11-85

SAMPLE MARKED: Cadmium (Still) Plating Solution

CALL NO.: NA CONTRACT REQN. NO.: NA

REFERRED BY: Production Officer

SUPPLIED BY: Shop 31C

HAS BEEN EXAMINED PER WITH THE FOLLOWING RESULTS: Allied-Kelite Technical Data Sheet

	Still TANK
Cadmium Metal, oz./gal	3.0
Cadmium Oxide, oz./gal	3.4
Sodium Cyanide, oz./gal	14.1
Sodium Hydroxide, oz./gal	2.0
Ratio: Sodium Cyanide / Cadmium	4.7 to 1

THIS MATERIAL IS IN ACCORDANCE WITH THE CHEMICAL REQUIREMENTS OF THE ABOVE MENTIONED SPECIFICATION EXCEPT

TANK IS SATISFACTORY

REPORTED
FEB 12 1985
CHEMICAL LABY
NAVSHIPYDNORVA

REPORT TO:
ORIGINAL
Code 134.2
COPY

The person [illegible] based on personal [illegible] signature that the [illegible] performed in accordance with the specified requirements.

M. G. McCrickard — CHEMIST
2-11-85 — DATE

NAVY GATLING BUSINESS FORMS CO., INC., NORFOLK VA.

SNA NNSY 10120/2 (4-79)

NORFOLK NAVAL SHIPYARD

PORTSMOUTH, VIRGINIA

(1 Sample)

CHEMICAL LABORATORY

8[illegible]750

REPORT OF CHEMICAL ANALYSIS (GENERAL)

REFER TO: FILE NO. FOLDER NO. SAMPLE RECEIVED: 3-20-85

SAMPLE MARKED: Brass Plating Solution

CALL NO. NA CONTRACT REQN. NO. NA

REFERRED BY Production Officer

SUPPLIED BY Shop 31C

HAS BEEN EXAMINED PER WITH THE FOLLOWING RESULTS: Metal Finishing Handbook ~~1984 Edition~~

314 gal TANK

Copper Metal, oz/gal	3.8
Zinc Metal, oz/gal	1.8
Free Cyanide (KCN), oz/gal	2.1
Rochelle Salts	0.2
pH Value	9.9

REPORTED
MAR 22 1985
CHEMICAL LABY
NAVSHIPYDNORVA

THIS MATERIAL IS IN ACCORDANCE WITH THE CHEMICAL REQUIREMENTS OF THE ABOVE MENTIONED SPECIFICATION EXCEPT

REPORT TO ORIGINAL

Code 134.2

COPY

The person designated to sign for an action verifies, based on personal observation, and certifies by his signature that the action has actually been performed in accordance with the specified requirements.

M. McCrickard 3-22-85

CHEMIST DATE

NAVY GAYLING BUSINESS FORMS CO. INC. NORFOLK VA

5ND NNSY 10320/2 (4-79)

NORFOLK NAVAL SHIPYARD

PORTSMOUTH, VIRGINIA

1 Sample

CHEMICAL LABORATORY

REPORT OF CHEMICAL ANALYSIS (GENERAL)

REFER TO: FILE NO. 867466 FOLDER NO. SAMPLE RECEIVED: 3-5-85

SAMPLE MARKED: Zinc (Still) Plating Solution

CALL NO.: N/A CONTRACT REQN. NO.: N/A

REFERRED BY: Production Dept.

SUPPLIED BY: Shop 31C

HAS BEEN EXAMINED PER WITH THE FOLLOWING RESULTS: Allied-Kelite Tech. Data Sheet.

315 gal Tank

Zinc metal, oz/gal	1.0
Sodium Cyanide, oz/gal	2.1
Sodium Hydroxide, oz/gal	1.3
Ratio: Sodium Cyanide / Zinc	2.1

REPORTED
MAR 06 1985
CHEMICAL LABY
NAVSHIPYDNORVA

THIS MATERIAL IS IN ACCORDANCE WITH THE CHEMICAL REQUIREMENTS OF THE ABOVE MENTIONED SPECIFICATION EXCEPT

Add to Tank: 100 lbs Zinc Oxide
100 lbs Sodium Hydroxide
225 lbs Sodium Cyanide

REPORT TO: ORIGINAL · Shop 31C

COPY · Code 134.2

The person designated below certifies as to the tests verified, based on personal observation, and certifies by his signature that the tests have actually been performed in accordance with the specified requirements.

J. Rivers — CHEMIST — 3-5-85 — DATE

NAVY GATLING BUSINESS FORMS CO., INC., NORFOLK, VA.

SNDL NSY 10320/2 (4-79)

NORFOLK NAVAL SHIPYARD

PORTSMOUTH, VIRGINIA

1 sample

CHEMICAL LABORATORY

REPORT OF CHEMICAL ANALYSIS (GENERAL)

REFER TO: FILE NO. 865902 FOLDER NO. | SAMPLE RECEIVED: 2-20-85

SAMPLE MARKED: Zinc barrel Plating Solution

CALL NO.: N/A | CONTRACT REQN. NO.: N/A

REFERRED BY: Production Dep't

SUPPLIED BY: Shop 31C

HAS BEEN EXAMINED PER WITH THE FOLLOWING RESULTS: Allied Kelite Tech. Data. Sheet, 220 gal Tank

Zinc metal, oz/gal	6.0
Sodium Cyanide, oz/gal	12.8
Sodium Hydroxide, oz/gal	16.7
Ratio Sodium Cyanide / Zinc	2.1:1

REPORTED
FEB 21 1985
CHEMICAL LABY
NAVSHIPYDNORVA

THIS MATERIAL IS IN ACCORDANCE WITH THE CHARACTERISTICS OF THE ABOVE MENTIONED SPECIFICATION EXCEPT

Note: no additions are needed.

REPORT TO: ORIGINAL Shop 31C

COPY Code 134.2

The person designated to sign for an action verifies, based on personal observation, and certifies by his signature that the action has actually been performed in accordance with the specified requirements.

J. Rivers — CHIEF CHEMIST — 2-20-85 DATE

The person designated to sign for an action verifies, based on personal observation, and certifies by his signature that the action has actually been performed in accordance with the specified requirements.

BUSINESS FORMS CO., INC., NORFOLK, VA. 9

5ND NNSY 10320/2 (4-79)

NORFOLK NAVAL SHIPYARD

PORTSMOUTH, VIRGINIA

1 sample

CHEMICAL LABORATORY

REPORT OF CHEMICAL ANALYSIS (GENERAL)

REFER TO: FILE NO. 866726 FOLDER NO.

SAMPLE RECEIVED: 2-25-85

SAMPLE MARKED: Bright Copper Plating

CALL NO.: N/A CONTRACT REQN. NO.: N/A

REFERRED BY: Production Dep't

SUPPLIED BY: Shop 31 C

HAS BEEN EXAMINED PER WITH THE FOLLOWING RESULTS:

REPORTED
FEB 26 1985
CHEMICAL LABY
NAVSHIPYDNORVA

838 gal / Tank

Copper metal, oz/gal	4.0
Copper cyanide, oz/gal	5.7
Isobrite 630, %	1.9
pH Value	11.0
Free Cyanide, oz/gal	0.9

THIS MATERIAL IS IN ACCORDANCE WITH THE CHEMICAL REQUIREMENTS OF THE ABOVE MENTIONED SPECIFICATION EXCEPT

Add to Tank: 20 gals Isobrite 630
50 lbs potassium Hydroxide
50 lbs potassium Cyanide

REPORT TO: ORIGINAL - Shop 31C

COPY - Code 134.2

The person designated to sign for an action verifies, based on personal observation, and certifies by his signature that the action has actually been performed in accordance with the specified requirements

J. Rewa
CHIEF CHEMIST

2-25-85
DATE

NAVY - GATLING BUSINESS FORMS CO INC. NORFOLK VA

APPENDIX D
IMPACTOR DATA

SOURCE EMISSIONS TESTING DATA SHEET
1110-CBC-3960/62 (Rev. 11-78)

PLANT: Bldg. 195	LOCATION: NNSY	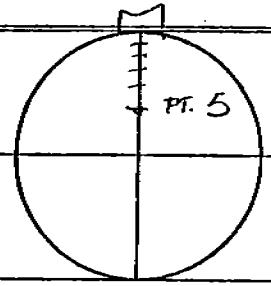	AMBIENT TEMPERATURE: ~45	BAROMETRIC PRESSURE, IN HG: 30.18
OPERATOR: Powers	DATE: 15 Mar 85		ASSUMED MOISTURE, %: 1.0	HEATER BOX SETTING
RUN NO.: TC-1 Run 1	SAMPLE BOX NO.		PROBE # (PITOT #)	PROBE LENGTH, in.: 3 FT.
METER BOX NO.	METER ΔH@: 2.0310		NOZZLE I.D. NO.: 0.248	NOZZLE DIAMETER, in.: 0.248
C FACTOR (Nomograph)	PITOT COEFFICIENT, CP: 0.84	SCHEMATIC OF STACK CROSS SECTION (Show Traverse Points)	PROBE HEATER SETTING	PROBE LINER MATERIAL: INCO

LEAK RATE (CFM) @ " HG: .016 @ 7" Hg

TRAVERSE POINT NUMBER	SAMPLING TIME (e) MIN	GAS METER READING (V_m) ft3	STACK TEMPERATURE (T_s) °F	VELOCITY HEAD (ΔP_s) In. H_2O	PRESSURE ACROSS ORIFICE (ΔH) In. H_2O	GAS SAMPLE TEMPERATURE AT DRY GAS METER Inlet (T_{min}) °F	Outlet (T_{mout}) °F	SAMPLE BOX TEMPERATURE °F	TEMPERATURE IMPINGER °F	SAMPLE VACUUM in. Hg.	CO_2 %	O_2 %
Pt. 5	1929	292.40	~80°F	0.70	2.5	75	75	50°F	~60°F	5	0	20.9
STOP	2359	523.18	~80°F	0.70	2.5			AMBIENT	~60°F	5		
	VOLUME	230.78										
	COLLECTED ACFM											
		TANK LOAD DATA (TANK 65):										
			2 LARGE SUCTION BEARINGS				20 FT² SUMMERED SURFACE AREA BEING PLATED					
					TEST START:	1930	V=	6.6 v.	A= 1240 AMPS			
TOTAL						2120	V=	6.5 v.	A= 1210 AMPS			
AVERAGE						2215	V=	6.6 v.	A= 1230 AMPS			
						2330	V= 6.6V		A= 1240 AMPS			
						0000	V= 7.5V		A= 1510 AMPS			

IMPACTOR FILTER DATA SHEET

Location NNSY

Building No. 195

Read By Powers

~~Scrubber~~ DEMISTER No. 65

Test No. 4

Run No. 1

Box No.

Date 15 MAR 85

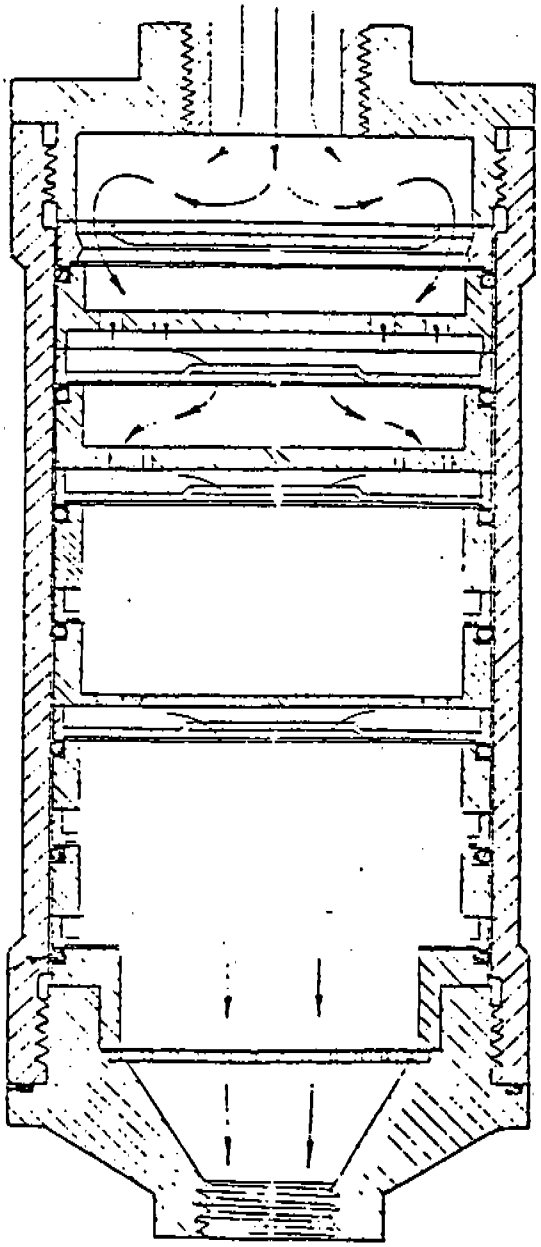

INLET SECTION
#347

COLLECTION PLATE NO. 1
Filter No. 195

COLLECTION PLATE NO. 2
Filter No. 199

COLLECTION PLATE NO. 3
Filter No. 203

COLLECTION PLATE NO. 5
Filter No. 204

FILTER COLLAR
FILTER No. 46

OUTLET SECTION

```
XEQ "NOMO 2"

                    RUN
EPA METHOD
5 NOMOGRAPH
PROGRAM

ENTER THE
FOLLOWING
DATA AS
REQUIRED.

PUSH R/S
AFTER
EACH DATA
ENTRY.

TEST
NUMBER=?
                FIX 2
        4.00     RUN

RUN NO. ?
        1.00     RUN

FILTER
NUMBER=?
                 RUN

INITIAL
METER VOL
FT3=?
      292.40     RUN
STACK
STATIC
PRESSURE
/PS/
IN. H2O=?
       -5.30     RUN
BAROMETER
PRESSURE
/PB/
IN. HG=?
       30.21     RUN
% H2O=?
        1.00     RUN
SAMPLE RATE
/QM/
CFM=?
         .75     RUN
STACK GAS
MOL WT
/MW/
LB/LB MOL=?
       28.60     RUN

AVG STACK
TEMP /TS/
DEG F=?
       80.00     RUN
```

IMPACTOR 4-1

```
AVG DELTA
P=? IN. H20
         .805    RUN

AMBIENT
TEMP F=?
     50.0000     RUN

PITOT TUBE
COEFF
CP=?
         .83     RUN

AVG STACK
VELOCITY
           3,035.815
FPM....

IDEAL
NOZZLE
DIAMETER
INCHES
                0.222

ENTER THE
ACTUAL
NOZZLE
DIAMETER
TO BE USED
ON
INCHES...
         .248    RUN
DELTA H
AT=?
      2.0910     RUN
               2.091

ENTER THE
FOLLOWING
FOR EACH
TRAVERSE
POINT
******
DP
IN. H2O=?
PUSH STO A

TS DEG F
PUSH STO B

TM DEGR F
PUSH STO C, R/S
***
AFTER LAST
DATA POINT PUSH
0, STO A, R/S
*******

          .700 STO 01
       80.000 STO 02
       75.000 STO 03
                 RUN

******
DELTA H=
                3.111
```

```
******
AT PT. NO.
                 1.

WHEN:
DP IN. H2O=
             0.700

TS DEG. F=
                80.

TM DEG F=
                75.
*******

          0. STO 01
                RUN

THE
FOLLOWING
IS GIVEN
FOR TRANSFER
TO THE
ISOKINETIC
PROGRAM 2
/FILE 5/

VELOCITY
PARAMETER
             19.44
AVG METER
TEMP.
DEG F=
                75.
AVG DELTA
H=  IN. H20
             3.111
AVG
DELTA P=
             0.700

FINAL METER
VOLUME FT3=?
      523.180    RUN
            523.180
INITIAL
METER VOL. FT3
            292.400
ABSOLUTE
STACK PRES
PS IN. HG
              29.82
AVG STACK TEMP
DEG F
                80.
GEOMETRIC AVG
ABSOLUTE STACK
TEMP. DEG R
            540.000
STANDARD
CONDITIONS ARE
29.92126 IN. HG
68.0 DEG F
******
END PROGRAM
```

```
          XEQ "ISOKIN2"
EPA METHOD
FIVE
ISOKINETIC
PROGRAM 2

ENTER DATA
FROM THE
NOMOGRAPH
PRGM.
AS REQUESTED

TEST NO.?
              4.    RUN
RUN NO.?
              1.    RUN
FILTER NO.?
                    RUN
VELOCITY
PARAMETER KV=?
           19.44    RUN
AVG METER
TEMP TM DEG F=?
             75.    RUN
DEG R =535.

AVG DELTA H
IN. H2O=?
           3.111    RUN
AVG DELTA P
IN. H2O=?
            .700    RUN
FINAL METER
VOL. FT3=?
         523.180    RUN
INITIAL METER
VOLUME FT3=?
         292.400    RUN
ABSOLUTE
STACK PRES.
IN. HG=?
          29.820    RUN
IS THE % H2O
KNOWN?

0 = YES
1 = NO
            0.00    RUN

% H2O ?
            1.50    RUN
% CO2 =?
            0.00    RUN
%O2 =?
           20.90    RUN
%CO =?
            0.00    RUN
PITOT COEF CP=?
             .83    RUN
SAMPLE TIME
MIN =?
         270.000    RUN
```

EMPIRICAL
4-1

```
NOZZLE
DIAMETER IN. =?
             .240    RUN
ROUND STACK?
1 = YES
0 = NO
            1.000    RUN
STACK DIA. IN.?
           24.000    RUN
AVG STACK TEMP
DEG F =?
             80.0    RUN
METER CALBRTN
FACTOR G =?
          1.0001     RUN
=======
NET METER
VOL. FT3=
                 230.803
CORRECTED
SAMPLE VOL.
VMSTD  SCF=
                 227.008
MOLE FRACTION
DRY GAS MD=
                    0.99
MOLECULAR WT
STACK GAS MW
LB/LB MOL=
                   28.67
AVG VELOCITY
FPM =?
               2,826.97
STACK AREA
AS SQ. IN.=
                   452.4
STACK DRY
FLOW QS  SCFM=
               8,521.58
ACFM
               8,747.98
**********
ISOKINETIC %I=
                    92.4
*********
```

```
STANDARD
CONDITIONS ARE
29.92126 IN. HG
68.0 DEG F

TO RUN THIS
PROGRAM AGAIN
PUSH R/S
END****
```

IMPACTOR RUN #2 LINE 65 (CL)

SOURCE EMISSIONS TESTING DATA SHEET
IND-CDC-3960/62 (Rev. 11-74)

PLANT 195	LOCATION VNSY	AMBIENT TEMPERATURE 58 °F	BAROMETRIC PRESSURE, IN HG 30.21
OPERATOR POWERS	DATE 16 MAR 85	ASSUMED MOISTURE, % 1.0	HEATER BOX SETTING —
RUN NO.	SAMPLE BOX NO.	PROBE # (PITOT #) INCO. 3 FT.	PROBE LENGTH, in. 3 FT.
METER BOX NO. #3	METER ΔH@ 2.0910	NOZZLE I.D. NO. —	NOZZLE DIAMETER, in. 0.248
C FACTOR (Nomograph)	PITOT COEFFICIENT, CP 0.83	PROBE HEATER SETTING —	PROBE LINER MATERIAL INCO
			LEAK RATE (CFM) @ " HG @

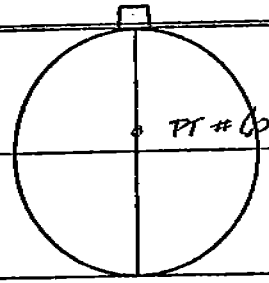

SCHEMATIC OF STACK CROSS SECTION (Show Traverse Points)

TRAVERSE POINT NUMBER	SAMPLING TIME (e) MIN	GAS METER READING (Vm) ft3	STACK TEMPERATURE (Ts) °F	VELOCITY HEAD (ΔPs) In. H2O	PRESSURE ACROSS ORIFICE (ΔH) In. H2O	GAS SAMPLE TEMPERATURE AT DRY GAS METER Inlet (T min) °F.	Outlet (T mout) °F.	SAMPLE BOX TEMPERATURE °F	TEMPERATURE IMPINGER °F	SAMPLE VACUUM in. Hg.	CO_2 %	O_2 %
PT. 6	1324 / 240 MIN.	788.00	80	0.79	3.81	58	58	—	~60	7.5		
END	1724	1033.08	80		3.81	117	83	—	~60	7.5		
	VOLUME SAMPLED	245.08										
TOTAL												
AVERAGE												

TOTAL SURFACE AREA BEING PLATED = 17 FT.²

TARE CONTENTS:
3 LARGE SHAFT SLEEVE BEARINGS: 5½ FT² SURF AREA EA.
1 SMALL ROTOR ½ FT² SURFACE AREA.

1330: V = 7.1V. A = 2000 AMP
1405: V = 7.1V A = 2000 AMP
1440 V = 7.1V A = 2010 AMP
1525 V = 7.1V A = 2010 AMP

```
                XEQ "NOMO 2"
                         RUN
EPA METHOD
5 NOMOGRAPH
PROGRAM

ENTER THE
FOLLOWING
DATA AS
REQUIRED.

PUSH R/S
AFTER
EACH DATA
ENTRY.

TEST
NUMBER=?
            4.000        RUN

RUN NO. ?
            2.000        RUN

FILTER
NUMBER=?
                         RUN

INITIAL
METER VOL
FT3=?
          788.000        RUN
STACK
STATIC
PRESSURE
/PS/
IN. H2O=?
           -5.300        RUN
BAROMETER
PRESSURE
/PB/
IN. HG=?
           30.210        RUN
% H2O=?
            1.000        RUN
SAMPLE RATE
/QM/
CFM=?
             .750        RUN
STACK GAS
MOL WT
/MW/
LB/LB MOL=?
           28.60         RUN

AVG STACK
TEMP /TS/
DEG F=?
           80.00         RUN
```

IMPACTOR
H-2

```
AVG DELTA
P=? IN. H20
             .003        RUN

AMBIENT
TEMP F=?
         58.0000         RUN

PITOT TUBE
COEFF
CP=?
             .83         RUN

AVG STACK
VELOCITY
                 3,832.041
FPM....

IDEAL
NOZZLE
DIAMETER
INCHES
                     0.220

ENTER THE
ACTUAL
NOZZLE
DIAMETER
TO BE USED
ON
INCHES...
             .248        RUN
DELTA H
AT=?
          2.0910         RUN
                     2.091

ENTER THE
FOLLOWING
FOR EACH
TRAVERSE
POINT
******
DP
IN. H2O=?
PUSH STO A

TS DEG F
PUSH STO B

TM DEGR F
PUSH STO C, R/S
***
AFTER LAST
DATA POINT PUSH
0, STO A, R/S
*******

             .790 STO 01
           80.000 STO 02
          117.000 STO 03
                     RUN

******
DELTA H=
                     3.787
```

```
IN. H2O
******
AT PT. NO.
                         1.

WHEN:
DP IN. H2O=
                     0.790

TS DEG F=
                        80.

TM DEG F=
                       117.
*******

                0. STO 01
                         RUN

THE
FOLLOWING
IS GIVEN
FOR TRANSFER
TO THE
ISOKINETIC
PROGRAM 2
/FILE 5/

VELOCITY
PARAMETER
                     20.65
AVG METER
TEMP.
DEG F=
                       117.
AVG DELTA
H=  IN. H2O
                     3.787
AVG
DELTA P=
                     0.790

FINAL METER
VOLUME FT3=?
       1,033.080         RUN
                1,033.080
INITIAL
METER VOL. FT3
                   788.000
ABSOLUTE
STACK PRES
PS IN. HG
                     29.82
AVG STACK TEMP
DEG F
                        80.
GEOMETRIC AVG
ABSOLUTE STACK
TEMP. DEG R
                   540.000
STANDARD
CONDITIONS ARE
29.92126 IN. HG
68.0 DEG F
```

```
XEQ "ISOKIN2"
EPA METHOD
FIVE
ISOKINETIC
PROGRAM 2

ENTER DATA
FROM THE
NOMOGRAPH
PRGM.
AS REQUESTED

TEST NO.?
              4.    RUN
RUN NO.?
              2.    RUN
FILTER NO.?
                    RUN
VELOCITY
PARAMETER KV=?
          20.65     RUN
AVG METER
TEMP TM DEG F=?
           117.     RUN
DEG R =577.

AVG DELTA H
IN. H2O=?
          3.787     RUN
AVG DELTA P
IN. H2O=?
           .790     RUN
FINAL METER
VOL. FT3=?
      1,033.080     RUN
INITIAL METER
VOLUME FT3=?
        788.000     RUN
ABSOLUTE
STACK PRES.
IN. HG=?
         29.820     RUN
IS THE % H2O
KNOWN?

0 = YES
1 = NO
           0.00     RUN

% H2O ?
           1.50     RUN
% CO2 =?
           0.00     RUN
%O2 =?
          20.90     RUN
%CO =?
           0.00     RUN
PITOT COEF CP=?
            .83     RUN
```

IMPACTOR
4-2

```
SAMPLE TIME
MIN =?
        240.000     RUN
NOZZLE
DIAMETER IN. =?
           .248     RUN
ROUND STACK?
1 = YES
0 = NO
          1.000     RUN
STACK DIA. IN.?
         24.000     RUN
AVG STACK TEMP
DEG F =?
           80.0     RUN
METER CALBRTN
FACTOR G =?
         1.0001     RUN
=======
NET METER
VOL. FT3=
                  245.105
CORRECTED
SAMPLE VOL.
VMSTD  SCF=
                  223.527
MOLE FRACTION
DRY GAS MD=
                     0.99
MOLECULAR WT
STACK GAS MW
LB/LB MOL=
                    28.67
AVG VELOCITY
FPM =?
                 3,002.93
STACK AREA
AS SQ. IN.=
                    452.4
STACK DRY
FLOW QS  SCFM=
                 9,051.99
ACFM
                 9,292.48
**********
ISOKINETIC %I=
                     96.3
*********

STANDARD
CONDITIONS ARE
29.92126 IN. HG
68.0 DEG F

TO RUN THIS
PROGRAM AGAIN
PUSH R/S
END****
```

IMPACTOR FILTER DATA SHEET

Location NNSY

Building No. BLDG 195

Read By POWERS

Scrubber No. DEMISTER LINE 65

Test No. IMPACTOR

Run No. 2

Box No. #2 U of W IMPACTOR

Date 16 MAR 85

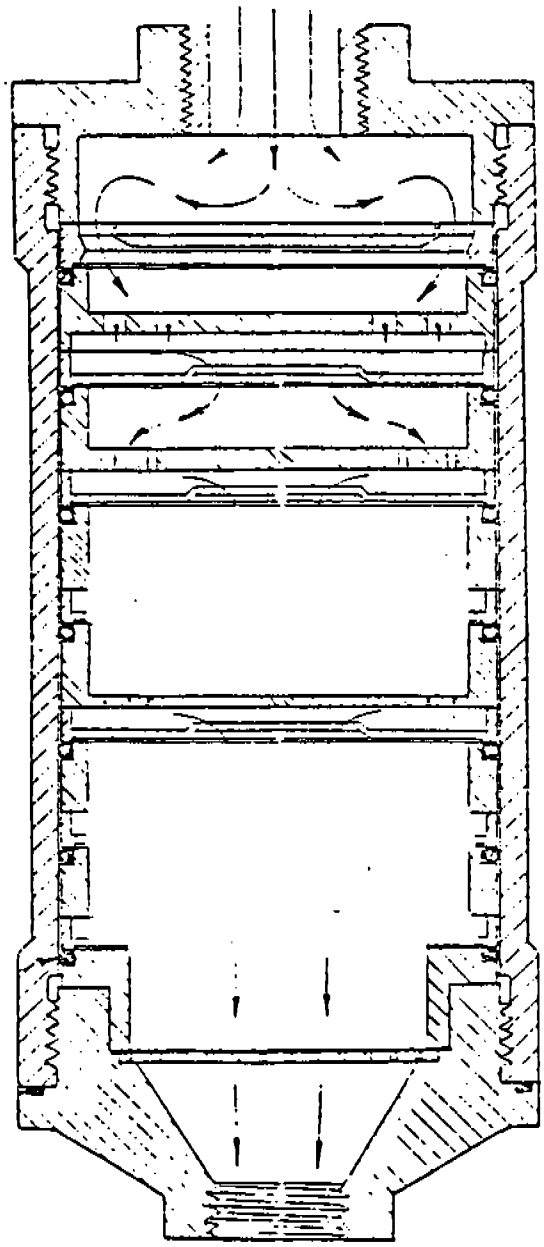

INLET SECTION

STAGE 1 344

COLLECTION PLATE NO. 1

STAGE 2 Filter No. 127

COLLECTION PLATE NO. 2

STAGE 3 Filter No. 128

COLLECTION PLATE NO. 3

STAGE 4 Filter No. 135

COLLECTION PLATE NO. 5

STAGE 5 Filter No. 139

FILTER COLLAR

FILTER No. 43

STAGE 6

OUTLET SECTION

APPENDIX E
SEDIMENTATION CHAMBER DATA

SOURCE EMISSIONS TESTING DATA SHEET
1110-CBC-3960/62 (Rev. 11-78) · SEDIMINTATION RUN

PLANT: NORFOLK	LOCATION: LINE E		AMBIENT TEMPERATURE	BAROMETRIC PRESSURE, IN HG
OPERATOR: SENTENO	DATE		ASSUMED MOISTURE, %	HEATER BOX SETTING
RUN NO.: 1	SAMPLE BOX NO.		PROBE # (PITOT #)	PROBE LENGTH, in.
METER BOX NO.	METER $\Delta H_@$		NOZZLE I.D. NO.	NOZZLE DIAMETER, in.
C FACTOR (Nomograph)	PITOT COEFFICIENT, CP	SCHEMATIC OF STACK CROSS SECTION (Show Traverse Points)	PROBE HEATER SETTING	PROBE LINER MATERIAL / LEAK RATE (CFM) @ " HG @

TRAVERSE POINT NUMBER	SAMPLING TIME (e) MIN	GAS METER READING (V_m) ft³	STACK TEMPERATURE (T_s) °F	VELOCITY HEAD (ΔP_s) In. H_2O	PRESSURE ACROSS ORIFICE (ΔH) In. H_2O	GAS SAMPLE TEMPERATURE AT DRY GAS METER Inlet (T_{min}) °F	Outlet (T_{mout}) °F	~~EXIT SAMPLE BOX~~ TEMPERATURE °F	TEMPERATURE IMPINGER °F	SAMPLE VACUUM in. Hg.	CO_2 %	O_2 %
RUN 1	4 min	712.51	83	.95	3.9	87	73	46		6.5		
	FINAL VOL	715.51						NOTE!	ON TRANSITION PIECE			
									THERE WAS WATER bubbling,			
									A little WATER.			
TOTAL												
AVERAGE												

SEDIMINTATION CHAMBER RUN
LINE E HCL
PLATING SHOP NORFOLK

SOURCE EMISSIONS TESTING DATA SHEET
11ND-CBC-3960/62 (Rev. 11-78)

PLANT: LINE E	LOCATION: NORFOLK		AMBIENT TEMPERATURE: 75	BAROMETRIC PRESSURE, IN HG: 29.98
OPERATOR: SENT/FOVER	DATE: 03/13/85		ASSUMED MOISTURE, %: 1.5	HEATER BOX SETTING: —
RUN NO.: 1, 2	SAMPLE BOX NO.		PROBE # (PITOT #): 3-1	PROBE LENGTH, in.: 36"
METER BOX NO.: #3	METER ΔH@		NOZZLE I.D. NO.: ~~.326~~ TAHT #2	NOZZLE DIAMETER, in.: .326
C FACTOR (Nomograph)	PITOT COEFFICIENT, CP: 0.82	SCHEMATIC OF STACK CROSS SECTION (Show Traverse Points)	PROBE HEATER SETTING	PROBE LINER MATERIAL: GLASS
				LEAK RATE (CFM) @ " HG: @ .008

TRAVERSE POINT NUMBER	SAMPLING TIME (e) MIN	GAS METER READING (V_m) ft^3	STACK TEMPERATURE (T_s) °F	VELOCITY HEAD (ΔP_s) In. H_2O	PRESSURE ACROSS ORIFICE (ΔH) In. H_2O	GAS SAMPLE TEMPERATURE AT DRY GAS METER: Inlet (T min) °F.	Outlet (T mout) °F.	SAMPLE BOX TEMPERATURE °F	TEMPERATURE IMPINGER °F	SAMPLE VACUUM in. Hg.	CO_2 %	O_2 %
#1	2 min		75	1.1	2.1	75	90	65	65	.4	20.9	0
#2	1 min		75	1.1	2.1	75	90	65	65	4	20.9	0
			ZINC	COATED	BOLTS	≈	500 in²					
			~~WASH~~	#200	BOLTS							
TOTAL												
AVERAGE												

SOURCE EMISSIONS TESTING DATA SHEET
11ND-CBC-3960/62 (Rev. 11-78)

PLANT: NORFOLK	LOCATION: LINE 63		AMBIENT TEMPERATURE: 73	BAROMETRIC PRESSURE, IN HG: 29.92
OPERATOR: SENT/FOER	DATE: 03/14/85		ASSUMED MOISTURE, %: 1.1	HEATER BOX SETTING:
RUN NO.: 1 & 2	SAMPLE BOX NO.:		PROBE # (PITOT #): 3.1	PROBE LENGTH, in.: 36
METER BOX NO.:	METER ΔH@: 2.091		NOZZLE I.D. NO.: 1/4" ~~TAN~~ TEFLON	NOZZLE DIAMETER, in.: .243
C FACTOR (Nomograph)	PITOT COEFFICIENT, CP	SCHEMATIC OF STACK CROSS SECTION (Show Traverse Points)	PROBE HEATER SETTING	PROBE LINER MATERIAL / LEAK RATE (CFM) @ " HG: 0.006 @ 10"

TRAVERSE POINT NUMBER	SAMPLING TIME (e) MIN	GAS METER READING (V_m) ft3	STACK TEMPERATURE (T_s) °F	VELOCITY HEAD (ΔP_s) In. H_2O	PRESSURE ACROSS ORIFICE (ΔH) In. H_2O	GAS SAMPLE TEMPERATURE AT DRY GAS METER Inlet (T min) °F.	Outlet (T mout) °F.	SAMPLE BOX TEMPERATURE °F	TEMPERATURE IMPINGER °F	SAMPLE VACUUM in. Hg.	CO_2 %	O_2 %
			2 times this difference									
RUN 1	5 min	583.175	83	.80 ACT	4.0	85	79					
		585.932		VOLTS = 5.7V								
				AMPS = 1750 AMPS								
RUN 2	5 min	~~[illegible]~~		~~[illegible]~~	~~[illegible]~~							
TOTAL												
AVERAGE												

APPENDIX F
SAMPLE CALCULATIONS

Example Particulate Calculations

1. Volume of dry gas in cubic feet sampled at standard conditions.*

$$V_{m_{std}} = V_m \left(\frac{T_{std}}{t_m + 460} \right) \left[\frac{P_b + \frac{\Delta H}{13.6}}{P_{std}} \right]$$

$$V_{m_{std}} = 17.646\ V_m \left(\frac{P_b + \frac{\Delta H}{13.6}}{t_m + 460} \right) = \text{ft.}^3$$

2. Volume of water vapor in cubic feet collected at standard conditions.*

By volume measurement:

$$V_{w_{gas}} = \frac{(V_w)\ \rho_{H_2O}\ R\ T_{std}}{P_{std}\ MW_{H_2O}\ 453.59237}$$

$$V_{w_{gas}} = 0.0471\ V_w$$

By mass measurement:

$$V_{w_{gas}} = \frac{(m_w)\ R\ T_{std}}{P_{std}\ MW_{H_2O}\ 453.59237}$$

$$V_{w_{gas}} = 0.0472\ m_w$$

3. Percent moisture in stack gas

$$\%M = \frac{V_{w_{gas}}}{V_{m_{std}} + V_{w_{gas}}} \times 100$$

4. Mole fraction of dry gas

$$M_d = \frac{100 - \%M}{100}$$

* 528°R, 29.92126 in. Hg

5. Average molecular weight of dry stack gas.

$$MW_d = \left[0.44\ (\%CO_2)\right] + \left[0.32\ (\%O_2)\right] + \left[0.28(100 - \%O_2 - \%CO_2)\right] = \text{lb/lb mole}$$

6. Molecular weight of stack gas.

$$MW = MW_d \times M_d + 18\ (1-M_d) = \frac{\text{lb}}{\text{lb-mole}}$$

7. Stack pressure, "Hg Absolute

$$P_s = P_b + \frac{\text{stack pressure "}H_2O}{13.6}$$

8. Stack velocity at stack conditions, fpm

$$V_s = C_p\ 60 \left[\frac{(2G)(\rho H_2O)(P_{std})(MW_{air})(ts + 460)(\Delta P)}{12\ (\rho_{air})(P_s)(MW)(T_{std})}\right]^{\frac{1}{2}}$$

$$V_s = 5123.2\ C_p \left[\frac{(t_s + 460)\ \ (\Delta P_s)}{(P_s)\ (MW)}\right]^{\frac{1}{2}} = \text{fpm}$$

9. Stack gas volume at standard conditions, SCFM*

$$Q_s = \frac{V_s\ A_s\ M_d\ T_{std}\ P_s}{144\ (t_s + 460)\ P_{std}}$$

$$Q_s = \frac{0.1225\ V_s\ A_s\ M_d\ Ps}{t_s + 460} = \text{DSCFM}$$

10. Percent isokinetic

$$\%I = \frac{V_{m_{std}}(t_s + 460)\ P_{std}\ 100}{M_d\ T_{std}\ P_s\ T_t\ V_s\left[\frac{\pi\ (D_n)^2}{4\ (144)}\right]}$$

$$\%I = \frac{1039\ V_{m_{std}}\ (t_s + 460)}{M_d\ P_s\ T_t\ V_s\ D_n^{\ 2}}$$

* 528°R, 29.92126 "Hg

SAMPLE CALCULATIONS

A. MASS EMISSIONS RATE, C_{AN} (mg/m^3):

$$C_{AN} = \left[\frac{M_F}{V_{MSTD}} \times \frac{35.315\ FT^3}{m^3} \right]$$

M_F = TOTAL PARTICULATE COLLECTED (mg)

V_{MSTD} = DRY SAMPLE VOLUME COLLECTED (FT^3)

- SAMPLE CALCULATION -

RUN 1-1 LINE 65 INLET:

$$C_{Cr} = \frac{0.698\ mg}{61.656\ FT^3} \times \frac{35.315\ FT^3}{m^3}$$

$$C_{Cr} = 0.400\ \frac{mg}{m^3}$$

B. MASS EMISSIONS RATE, C (LB/HR):

$$C = \left[C_{AN} \times Q_{SDRY} \times \frac{m^3}{35.315\ FT^3} \times \frac{1\ LB}{453{,}600\ mg} \times \frac{60\ MIN}{HR} \right]$$

Q_{SDRY} = EXHAUST GAS FLOWRATE IN DUCT ($\frac{FT^3}{MIN}$)

- SAMPLE CALCULATION -

RUN 1-1 LINE 65 INLET:

$$C = \frac{0.400\ mg}{m^3} \times \frac{8325\ FT^3}{MIN} \times \frac{m^3}{35.315\ FT^3} \times \frac{1\ LB}{453{,}600\ mg} \times \frac{60\ MIN}{HR}$$

$$C = 0.013\ \frac{LB}{HR}$$

C. CONVERSION OF Cr_{TOT} EMISSION RATE TO CrO_3 EMISSION RATE:

MOLECULAR WEIGHT (MW) OF Cr = 52

MW OF CrO_3 = 100

$$\text{EMISSION RATE } CrO_3 = \text{EMISSION RATE } Cr_{TOT} \times \frac{MW\ CrO_3}{MW\ Cr_{TOT}}$$

– SAMPLE CALCULATION –

<u>RUN 1-1 LINE 65 INLET</u>:

$$\text{EMISSION RATE } CrO_3 = 0.013 \frac{LB}{HR} \times \frac{100}{52}$$

$$= 0.024 \frac{LB}{HR}$$

APPENDIX G
EQUIPMENT CALIBRATION DATA

Worksheet

METER CALIBRATION

Barometric Pressure 29.785

METER # 2

DONE BY SUZUKI / FOERSTER

DATE 20 FEB 85

10:56

$\Delta H = 0.3$

Vd initial 433.300 ft^3

Start test and record temperatures every cubic ft.

Vw	Tw(°F)	Tdin (°F)
0	68	73
1		73
2		74
3		75
4		76
5		76

END TEST

Actual Vw 5.000 ft^3

Vd final 438.525 ft^3

Tt 15.492 (min).(sec)

RUN PROGRAM

γ 0.9829

He 1.6170 "H_2O

11:08

$\Delta H = 0.5$

Vd initial 438.525 ft^3

Start test and record temperatures every Cf.

Vw	Tw(°F)	Tdin (°F)
0	60	76
1		77
2		78
3		78
4		79
5		80

END TEST

Actual Vw 5.000 ft^3

Vd final 443.743 ft^3

Tt 12.308 (min).(sec)

RUN PROGRAM

γ 0.9902

He 1.6752 "H_2O

11:20

$\Delta H = 0.8$

Vd initial 443.743 ft^3

Start test and record temperatures every Cf.

Vw	Tw(°F)	Tdin (°F)
0	60	78
1		80
2		81
3		82
4		82
5		83

END TEST

Actual Vw 5.000 ft^3

Vd final 448.965 ft^3

Tt 10.625 (min).(sec)

RUN PROGRAM

γ 0.9942

He 1.7165 "H_2O

METER CALIBRATION

Worksheet

Barometric Pressure 29.785

DONE BY SUSUKI / FOERSTER

METER # 2

DATE 20 FEB 85

11:30

ΔH = ~~0.3~~ 1.0

Vd initial 448.965 ft^3

Start test and record temperatures every cubic ft.

Vw	Tw(°F)	Tdin (°F)
0	60	83
1		84
2		85
3		85
4		86
5		87

END TEST

Actual Vw 5.000 ft^3

Vd final 454.186 ft^3

Tt 9.014 (min).(sec)

RUN PROGRAM

γ 1.0012

He 1.7198 "H_2O

11:45

ΔH = ~~0.5~~ 2.0

Vd initial 455.058 ft^3

Start test and record temperatures every cf.

Vw	Tw(°F)	Tdin (°F)
0	60.2	85
1		87
2		88
3		88
4		89
5		90

END TEST

Actual Vw 5.000 ft^3

Vd final 460.312 ft^3

Tt 6.33 (min).(sec

RUN PROGRAM

γ 0.9973

He 1.8044 "H_2O

11:55

ΔH = ~~0.8~~ 3.0

Vd initial 460.574 ft^3

Start test and record temperatures every cf.

Vw	Tw(°F)	Tdin (°F)
0	60.4	85
1		88
2		89
3		90
4		91
5		93

END TEST

Actual Vw 5.000 ft^3

Vd final 465.820 ft^3

Tt 5.223 (min).(sec)

RUN PROGRAM

γ 0.9987

He 1.8168 "H_2O

Worksheet

METER CALIBRATION

Barometric Pressure 29.695

METER # 3

DONE BY S. FOERSTER

DATE 20 FEB 1985

1:10

ΔH = 0.3

Vd initial 309.345 ft^3

Start test and record temperatures every cubic ft.

Vw	Tw(°F)	Tdin (°F)
0	61.0	78
1		81
2		85
3		87
4		90
5		91

END TEST

Actual Vw 5.000 ft^3

Vd final 314.599 ft^3

Tt 17.104 (min).(sec)

RUN PROGRAM

γ 0.9954

He 1.8805 "H_2O

1:25

ΔH = 0.5

Vd initial 314.907 ft^3

Start test and record temperatures every Cf.

Vw	Tw(°F)	Tdin (°F)
0	61.0	85
1		89
2		91
3		93
4		94
5		95

END TEST

Actual Vw 5.000 ft^3

Vd final 320.177 ft^3

Tt 13.351 (min).(sec)

RUN PROGRAM

γ 1.0025

He 1.9250 "H_2O

1:50

ΔH = ~~0.8~~ 1.0

Vd initial 320.320 ft^3

Start test and record temperatures every Cf.

Vw	Tw(°F)	Tdin (°F)
0	61.0	87
1		92
2		94
3		96
4		97
5		98

END TEST

Actual Vw 5.000 ft^3

Vd final 325.618 ft^3

Tt 9.416 (min).(sec)

RUN PROGRAM

γ 1.0011

He 1.9658 "H_2O

Worksheet

METER CALIBRATION

Barometric Pressure 29.695

METER # 3

DONE BY S. FOERSTER

DATE 20 FEB 1985

2:10 0.8

ΔH = ~~0.5~~

Vd initial 326.053 ft³

Start test and record temperatures every cubic ft.

Vw	Tw(°F)	Tdin (°F)
0	61	88
1		93
2		95
3		96
4		98
5		99

END TEST

Actual Vw 5.000 ft³

Vd final 331.364 ft³

Tt 10:470 (min).(sec)

RUN PROGRAM

γ 1.0006

He 1.9433 "H_2O

2:25 2.0

ΔH = ~~0.5~~

Vd initial 331.596 ft³

Start test and record temperatures every Cf.

Vw	Tw(°F)	Tdin (°F)
0	61.5	88
1		94
2		96
3		98
4		101
5		102

END TEST

Actual Vw 5.000 ft³

Vd final 336.905 ft³

Tt 7.092 (min).(sec)

RUN PROGRAM

γ 1.0001

He 2.1356 "H_2O

2:40 3.0

ΔH = ~~0.8~~

Vd initial 337.609 ft³

Start test and record temperatures every Cf.

Vw	Tw(°F)	Tdin (°F)
0	61.6	88
1		95
2		97
3		99
4		102
5		104

END TEST

Actual Vw 5.000 ft³

Vd final 342.913 ft³

Tt 5.47 (min).(sec)

RUN PROGRAM

γ 1.0001

He 2.0910 "H_2O

Worksheet

METER CALIBRATION

Barometric Pressure 30.195

METER # 4

DONE BY S. FOERSTER

DATE 14 FEB 1985

$\Delta H = 0.3$

Vd initial 246.003 ft^3

Start test and record temperatures every cubic ft.

Vw	Tw(°F)	Tdin (°F)
0	72	86
1		90
2		93
3		96
4		99
5		103

END TEST

Actual Vw 5.000 ft^3

Vd final 251.268 ft^3

Tt 16.595 (min).(sec)

RUN PROGRAM

γ 0.9891

He 1.8565 "H_2O

$\Delta H = 0.5$

Vd initial 251.633 ft^3

Start test and record temperatures every Cf.

Vw	Tw(°F)	Tdin (°F)
0	71.6	96
1		102
2		105
3		107
4		108
5		109

END TEST

Actual Vw 5.000 ft^3

Vd final 256.918 ft^3

Tt 13.253 (min).(sec

RUN PROGRAM

γ 1.0034

He 1.8935 "H_2O

$\Delta H = 0.8$

Vd initial 268.122 ft^3

Start test and record temperatures every Cf.

Vw	Tw(°F)	Tdin (°F)
0	72	94
1		98
2		101
3		104
4		106
5		107

END TEST

Actual Vw 5.000 ft^3

Vd final 273.394 ft^3

Tt 10.278 (min).(sec)

RUN PROGRAM

γ 0.9993

He 1.8534 "H_2O

METER CALIBRATION

Worksheet

Barometric Pressure 30.195

DONE BY S. FOERSTER

METER # 4

DATE 14 FEB 1985

ΔH = ~~0.5~~ 1.0

Vd initial 273.667 ft^3

Start test and record temperatures every cubic ft.

Vw	Tw(°F)	Tdin (°F)
0	72	99
1		104
2		107
3		109
4		111
5		112

END TEST

Actual Vw 5.000 ft^3

Vd final 278.957 ft^3

Tt 9.225 (min).(sec)

RUN PROGRAM

γ 1.0049

He 1.8331 "H_2O

ΔH = ~~0.5~~ 2.0

Vd initial 279.324 ft^3

Start test and record temperatures every Cf.

Vw	Tw(°F)	Tdin (°F)
0	72	103
1		108
2		110
3		112
4		114
5		115

END TEST

Actual Vw 5.000 ft^3

Vd final 284.620 ft^3

Tt 6.547 (min).(sec

RUN PROGRAM

γ 1.0072

He 1.9910 "H_2O

ΔH = ~~0.8~~ 3.0

Vd initial 284.803 ft^3

Start test and record temperatures every Cf.

Vw	Tw(°F)	Tdin (°F)
0	72	104
1		110
2		113
3		115
4		117
5		118

END TEST

Actual Vw 5.000 ft^3

Vd final 290.093 ft^3

Tt 5.428 (min).(sec)

RUN PROGRAM

γ 1.0103

He 2.0318 "H_2O

PITOT TUBE IDENTIFICATION NUMBER: #1 DATE: 1/30/85

CALIBRATED BY: FOERSTER, SENTENO

RUN NO.	Δp_{std} cm H_2O (in. H_2O)	$\Delta p(s)$ cm H_2O (in. H_2O)	$C_p(s)$	DEVIATION $C_p(s) - \bar{C}_p(A)$
1	0.510	0.760	.819	
2	0.515	0.750	.829	
3	0.515	0.740	.834	
		$\bar{C}_p$ (SIDE A)	.827	

RUN NO.	Δp_{std} cm H_2O (in. H_2O)	$\Delta p(s)$ cm H_2O (in. H_2O)	$C_p(s)$	DEVIATION $C_p(s) - \bar{C}_p(B)$
1	1.00	1.50	.817	
2	0.950	1.45	.822	
3	1.00	1.50	.817	
		$\bar{C}_p$ (SIDE B)	.819	

$$\text{AVERAGE DEVIATION} = \sigma(\text{A OR B}) = \frac{\sum_{1}^{3} \left| C_p(s) - \bar{C}_p(\text{A OR B}) \right|}{3} \leftarrow \text{MUST BE} \leq 0.01$$

$$\left| \bar{C}_p(\text{SIDE A}) - C_p(\text{SIDE B}) \right| \leftarrow \text{MUST BE} \leq 0.01$$

Figure 2-9. Pitot tube calibration data.

PITOT TUBE IDENTIFICATION NUMBER: #1 DATE: 1/30/85

CALIBRATED BY: FOERSTER, SENTENO

RUN NO.	Δp_{std} cm H_2O (in. H_2O)	$\Delta p_{(s)}$ cm H_2O (in. H_2O)	$C_{p(s)}$	DEVIATION $C_{p(s)} - \bar{C}_p(A)$
1	1.50	2.20	.826	
2	1.48	2.23	.815	
3	1.50	2.23	.820	
		$\bar{C}_p$ (SIDE A)	.820	

RUN NO.	Δp_{std} cm H_2O (in. H_2O)	$\Delta p_{(s)}$ cm H_2O (in. H_2O)	$C_{p(s)}$	DEVIATION $C_{p(s)} - \bar{C}_p(B)$
1				
2				
3				
		$\bar{C}_p$ (SIDE B)		

$$\text{AVERAGE DEVIATION} = \sigma\,(\text{A OR B}) = \frac{\sum_{1}^{3} \left| C_{p(s)} - \bar{C}_p(\text{A OR B}) \right|}{3} \leftarrow \text{MUST BE} \leq 0.01$$

$$\left| \bar{C}_p\,(\text{SIDE A}) - \bar{C}_p\,(\text{SIDE B}) \right| \leftarrow \text{MUST BE} \leq 0.01$$

Figure 2-9. Pitot tube calibration data.

POTOT TUBE IDENTIFICATION NUMBER: 3-1 DATE: 22 MAY '85

CALIBRATED BY: S. FOERSTER

RUN NO.	P_{std} cm H_2O (in. H_2O)	P_s cm H_2O (in. H_2O)	$C_{p(s)}$	DEVIATION $C_{p(s)}-\bar{C}_p(A)$
1	1.0	1.5	0.808	
2	1.0	1.4	0.837	
3	1.0	1.45	0.822	
		C_p(SIDE A)	0.822	

RUN NO.	P_{std} cm H_2O (in. H_2O)	P_s cm H_2O (in. H_2O)	$C_{p(s)}$	DEVIATION $C_{p(s)}-\bar{C}_p(B)$
1				
2				
3				
		C_p(SIDE B)		

RUN NO.	P_{std} cm H_2O (in. H_2O)	P_s cm H_2O (in. H_2O)	$C_{p(s)}$	DEVIATION $C_{p(s)}-\bar{C}_p(C)$
1				
2				
3				
		C_p(SIDE C)		

$$\text{AVERAGE DEVIATION} = \text{(A OR B)} = \frac{C_p(s)-\bar{C}_p(\text{A OR B})}{3} \quad \text{MUST BE} \leq 0.01$$

C_p(SIDE A)$-C_p$(SIDE B) ⟵ MUST BE ≤ 0.01

POTOT TUBE IDENTIFICATION NUMBER: 3-1 DATE: 22 MAY '85

CALIBRATED BY: S. FOERSTER

RUN NO.	P_{std} cm H_2O (in. H_2O)	P_s cm H_2O (in. H_2O)	$C_{p(s)}$	DEVIATION $C_{p(s)}-\bar{C}_p(A)$
1	0.300	0.42	0.837	
2	0.300	0.42	0.837	
3	0.300	0.41	0.847	
		C_p(SIDE A)	0.840	

RUN NO.	P_{std} cm H_2O (in. H_2O)	P_s cm H_2O (in. H_2O)	$C_{p(s)}$	DEVIATION $C_{p(s)}-\bar{C}_p(B)$
1	0.50	0.68	0.849	
2	0.495	0.70	0.833	
3	0.495	0.69	0.839	
		C_p(SIDE B)	0.840	

RUN NO.	P_{std} cm H_2O (in. H_2O)	P_s cm H_2O (in. H_2O)	$C_{p(s)}$	DEVIATION $C_{p(s)}-\bar{C}_p(C)$
1	1.5	2.05	0.847	
2	1.5	2.15	0.827	
3	1.5	2.15	0.827	
		C_p(SIDE C)	0.834	

AVERAGE DEVIATION = (A OR B) $= \dfrac{C_p(s)-\bar{C}_p(\text{A OR B})}{3}$ MUST BE ≤ 0.01

C_p(SIDE A)$-C_p$(SIDE B) $\longleftarrow$ MUST BE ≤ 0.01

THERMOCOUPLE
Calibration

SAND BATH

T/C Type	T/C #	wire color code check	Boro Pressure	Calc Boiling Pt	Boiling Point actual	Boiling Point T/C	~~Ice Point~~ actual	~~Ice Point~~ T/C	Ambient temp actual	Ambient temp T/C	Test Date	Test Per
K	5-9	LITTLE CREEK DOCK	29.93	X	206	205	504	504	54	53	2/[illegible]	DW
K	5-10	"	"	X	219	219	504	505	54	53	"	"
K	5-11	"	"	X	219	219	506	509	55	54	"	"
K	6"-20	"	"	X	210	209	462	461	58	58	"	"
K	1-3	"	"	X	210	209	459	459	58	57	"	"
K	3-4		30.02	X	212	212	487	490	67	67	2-15	"
K	3-6				209	210	490	482	70	69	"	"
K	3-8				209	209	498	498	74	73	"	"
K	3-9				209	209	500	499	71	69	"	"
K	3-14				209	209			70	68	"	"
K	3-15				209	209			70	68	"	"
K	10-7				209	209	495	496	70	68	"	"
K	10-6				209	209	496	499	70	67	"	"
K	10-1				209	211	498	496	72	68	"	"
K	10-3				209	211	500	499	72	69	"	"
K	3-3				245	247	500	509	61	61	2/10/[illegible]	[illegible]
K	3-4				250	251	500	506	63	62	" "	" "
K	3-2				251	253	500	506	63	62	" "	" "
K	5-6				248	249	500	500	64	63	2/10/[illegible]	[illegible]

THERMOCOUPLE CALIBRATION

T/C TYPE	T/C #	WIRE COLOR CODE CHECK	BARO PRES	CALC BOIL PT	BOILING PT ACTUAL	BOILING PT T/C	ICE PT ACTUAL	ICE PT T/C	AMBIENT TEMP ACTUAL	AMBIENT TEMP T/C	TEST DATE	TEST PERSONNEL
K	3-1	to Long Beach MAY 84	29.990	212°	212°	213°	32°	32°	70°	68°	4/8/83	Perry, Wil
K	3-2	to Long Beach MAY 84	29.990	212°	212°	213°	32°	33°	70°	68°	4/8/83	" " "
K	3-3		29.990	212°	212°	214°	32°	32°	70°	68°	4/8/83	" " "
K	3-4	to Long Beach MAY 84	29.990	212°	212°	214°	32°	33°	72°	69°	4/8/83	" " "
K	3-5		29.990	212°	212°	213°	32°	32°	72°	69°	4/8/83	Perry, Wil
K	24"-1		29.945	212°	212°	213°	32°	32°	62°	63°	4/12/83	Perry
K	24"-2		29.945	212°	212°	212°	32°	32°	62°	63°	4/12/83	" "
K	24"-3		29.945	212°	212°	212°	32°	32°	62°	63°	4/12/83	" "
K	24"-4		29.945	212°	212°	213°	32°	32°	62°	63°	4/12/83	" "
K	24"-5		29.945	212°	212°	212°	32°	32°	62°	62°	4/12/83	" "
K	12"-1		29.945	212°	212°	213°	32°	32°	62°	62°	4/12/83	Perry
K	12"-2		29.945	212°	212°	212°	32°	32°	62°	62°	4/12/83	" "
K	12"-3		29.945	212°	212°	212°	32°	32°	62°	62°	4/12/83	" "
K	12"-4		29.945	212°	212°	213°	32°	32°	62°	62°	4/12/83	" "
K	12"-5		29.945	212°	212°	212°	32°	32°	62°	62°	4/12/83	" "
K	6"-1		29.945	212°	212°	212°	32°	32°	62°	62°	4/12/83	Perry
K	6"-2		29.945	212°	212°	212°	32°	32°	62°	62°	4/12/83	" "
K	6"-3		29.945	212°	212°	212°	32°	32°	62°	62°	4/12/83	" "
K	6"-4		29.945	212°	212°	212°	32°	32°	62°	62°	4/12/83	" "
K	6"-5		29.945	212°	212°	212	32°	32°	62°	62°	4/12/83	" "
K	6"-6		30.050	212°	212°	213°	32°	33°	68°	67°	4/14/83	Perry
K	6"-7		30.050	212°	212°	213°	32°	32	68°	67°	4/14/83	" "
K	6"-8		30.050	212°	212°	213°	32°	32°	68°	67°	4/14/83	" "
K	6"-9		30.050	212°	212°	213°	32°	32°	68°	67°	4/14/83	" "

APPENDIX H
RESUMES

APPENDIX H
RESUMES

RESUME

SETH FOERSTER

1985 Jan. - June	Engineering Co-op Coal/Air Department Naval Energy and Environmental Support Activity Port Hueneme, California
1981 - 1985	Student of Mechanical Engineering California State University San Luis Obispo, California

RESUME

WILLIAM E. POWERS	SET Engineer
1978	B.S. Mechanical Engineering Duke University Durham, N.C.
1981	MPH Environmental Science & Engineering University of North Carolina Chapel Hill, N.C.
1980-81	General Engineer Health Effects Research Laboratory National Environmental Research Center Environmental Protection Agency Research Triangle Park, N.C.
1982 to Present	Mechanical Engineer Coal/Air Department Naval Energy & Environmental Support Activity Port Hueneme, California

RESUME

JOE SENTENO

1985 Jan. - May	Engineering Co-op Coal/Air Department Naval Energy and Environmental Support Activity Port Hueneme, California
1982 - 1985	Student of Computer Engineering University of the Pacific Stockton, California

RESUME

SUSAN J. SUZUKI	SET Engineer
1982	B.S. Environmental Engineering California State University San Luis Obispo, California
1982-1984	Mechanical/Environmental Engineer Naval Air Rework Facility Alameda, California
1984 to Present	Mechanical Engineer Coal/Air Department Naval Energy & Environmental Support Activity Port Hueneme, California

RESUME

CHARLES K. YEE	SET Engineer
1963	B.S. Chemical Engineering Auburn University Auburn, Alabama
1969	M.S. Environmental Systems Engineering Clemson University Clemson, S.C.
1965-72	Public Health Engineer: Air Pollution Control Commission State Health Department Montgomery, Alabama
1972 to Present	Chemical Engineer Coal/Air Department Naval Energy & Environmental Support Activity Port Hueneme, California

RESUME

ROBERT W. SAUNDERS	Mechanical Engineer
1971	A.A.S. Electrical Engineering Technology Middlesex County College Edison, N.J.
1984	B.S. Civil and Environmental Engineering New Jersey Institute of Technology Newark, N.J.
1979-1982	Field Service Engineer Research-Cottrell, Inc. Somerville, N.J.
1983-1984	Structural Design Draftsman Research-Cottrell, Inc. Somerville, N.J.
1985-Present	Mechanical Engineer Coal/Air Department Naval Energy & Environmental Support Activity Port Hueneme, California