Note: This is a reference cited in *AP 42, Compilation of Air Pollutant Emission Factors, Volume I Stationary Point and Area Sources.* AP42 is located on the EPA web site at www.epa.gov/ttn/chief/ap42/

The file name refers to the reference number, the AP42 chapter and section. The file name "ref02_c01s02.pdf" would mean the reference is from AP42 chapter 1 section 2. The reference may be from a previous version of the section and no longer cited. The primary source should always be checked.

ERRATA SHEET FOR ELECTRONIC CHROME AND GRINDING TEST REPORT

In February 1992, the U.S. Environmental Protection Agency performed a source test for hexavalent chromium emissions from the scrubber at the Electronic Chrome and Grinding Company in Santa Fe Springs, California. The purpose of the test was to determine if the addition of polypropylene balls and a foam blanket to the plating tank bath would reduce hexavalent chromium emissions from the scrubber to a level that would be acceptable by the air regulatory agency of the State of California.

After the final report of the source test was distributed, an error was found in Chapter 3; Table, 3-5, which summarizes scrubber emissions in milligrams per ampere-hour, was found to be in error. Table 3-5 has been revised to present the correct data and is attached; it completely replaces the original Table 3-5.

TABLE 3-5

SUMMARY OF THE SCRUBBER EMISSIONS
EXPRESSED AS MILLIGRAMS PER AMPHERE-HOUR

RUN #	CONDITION[a]	EMISSION RATE (Mg per Hr)[b]	TOTAL CURRENT IN AMP-HOURS DURING TEST	TEST LENGTH (HOURS)	AMP-HOURS PER HOUR	Mg/Amp-hour[c]
1	WOFB-PB	295.6	9600	2	4800	0.062
2	WOFB-PB	417.1	10,200	2	5100	0.082
3	WOFB-PB	373.1	10,200	2	5100	0.073
4	WFB-PB	57.39	10,000	2	5000	0.011
5	WFB-PB	50.78	10,200	2	5100	0.010
6	WFB-PB	37.05	10,200	2	5100	0.007

a WOFB-PB = Without foam blanket or polypropylene balls
WFB-PB = With foam blanket and polypropylene balls

b Emission rate in milligrams per hour = Kilograms per hour x 10^6 milligrams per kilogram

c Milligrams per amp-hour = $\frac{\text{Milligrams per hour}}{\text{Amp-hour per hour}}$

CHROMIUM ELECTROPLATING EMISSIONS COMPARISON TEST

(USE OF POLYPROPYLENE BALLS AND A FOAM BLANKET
TO ENHANCE
THE PERFORMANCE OF EXISTING CONTROL EQUIPMENT)

ELECTRONIC CHROME
AND
GRINDING COMPANY

Santa Fe Springs, California

Prepared for:

UNITED STATES ENVIRONMENTAL PROTECTION AGENCY

EMISSION MEASUREMENT BRANCH

Research Triangle Park, North Carolina

EPA CONTRACT NO 68-D-90155

Prepared by:

ADVANCED SYSTEMS TECHNOLOGY, INC.
ONE SECURITIES CENTRE
3490 Piedmont Road, NE • Suite 1410
Atlanta, GA 30305-4810
(404)240-2930

December 4, 1992

TABLE OF CONTENTS

****

Sections		Page
	TABLE AND FIGURES	
	EXECUTIVE SUMMARY	i
I.	INTRODUCTION	1
II.	PROCESS OPERATION	2
III.	SUMMARY AND DISCUSSION OF RESULTS	8
IV.	SAMPLING LOCATIONS	18
V.	SAMPLING AND ANALYTICAL PROCEDURES	24
VI.	QUALITY ASSURANCE PROCEDURES	27

Appendices

A	Computer Print Out of Field Data	A-1
B	Field Data Sheets	B-1
C	Sampling Summary Sheet	C-1
D	Laboratory Analysis Reports and Chain of Custody Forms	D-1
E	Amp Hour Calculations	E-1
F	Sample Calculations	F-1
G	Draft Method - Determination of Hexavalent Chromium Emissions from Decorative and Hard Chrome Electroplating	G-1
H	Determination of Total Chromium and Hexavalent Chromium Emissions From Stationary Sources (CARB 425)	H-1
I	Laboratory Analysis Procedure Method of Determination of CrVI in Alkaline Solution	I-1
J	Equipment Calibration Data	J-1

FIGURES AND TABLES

****

Tables		Page
S-1	Summary of Test Conditions and Analytical Results	iii
2-1	Average Operating Parameters Monitored During Each Mass Emission Test Run for Plating Tank No. 8	6
2-2	Total Ampere-Hours Supplied to Plating Tank No. 8 During Mass Emission Test Runs	7
3-1	Summary of Stack Gas Conditions	12
3-2	Total Chromium Concentrations and Mass Emission Rates at Inlet Using ICP Analysis	13
3-3	Total Chromium Concentrations and Mass Emission Rates at Outlet Using Graphite Furnace Atomic Absorption Analysis	14
3-4	Summary of Scrubber Removal Efficiencies	15
3-5	Summary of the Scrubber Emissions Expressed as Milligrams/Ampere-Hour	16
3-6	Total Chromium Quantified in Scrubber Water and Plating Tank Solution Samples Using ICP	17

Figures

4-1	Stack Dimensions	19
4-2	Inlet Traverse Point Locations	20
4-3	Inlet Measurement Site	21
4-4	Outlet Dimensions and Sampling Ports	22
4-5	Outlet Traverse Point Locations	23
5-1	Schematic of the Modified U.S. EPA Method 13-B Sampling Train	25

EXECUTIVE SUMMARY

Chromium mass emission tests were conducted to evaluate removal efficiency of a packed-bed scrubber. Testing was performed during the week of February 17, 1992 at the Electronic Chrome and Grinding Company (EG&GC) located in Santa Fe Springs, California. The objective of this project work was to evaluate performance of the packed-bed scrubber for total chromium removal under the following conditions:

(Condition A) Plating Tank No. 8 operating without a foam blanket and polypropylene balls

(Condition B) Plating Tank No. 8 operating with a foam blanket and polypropylene balls

Three (3) tests were performed under Condition A and Condition B. Scrubber water samples and the plating solution samples in Tank No. 8 were collected during each test run.

Upon completion of field activities, samples were shipped to Research Triangle Institute Laboratory (RTIL), Research Triangle Park, North Carolina for the following samples:

- Outlet samples for hexavalent chromium (Cr-VI) using ion chromatography (IC) with a post column reactor, and total chromium using Graphite Furnace - Atomic Absorption Spectroscopy (GFAA).

- All inlet, scrubber water and plating tank solution samples for total chromium using Inductively Coupled Plasma emission spectrometry (ICP).

The Inductively Coupled Plasma (ICP) and GFAA are compatible techniques and therefore analytical results obtained can be favorably compared. Total chromium emissions at the inlet of the packed-bed scrubber averaged 1.66 milligram per dry standard cubic meter (mg/dscm) for the first set of three runs with Condition A (see above) and averaged 0.0369 mg/dscm for the second set of three runs with Condition B. Mass emissions at the outlet averaged 0.0595 mg/dscm for the first set of three runs, (Condition A) and 0.0084 mg/dscm for the second set of three runs (Condition B). The test conditions and analytical results are summarized in Table S-1.

The efficiency of the scrubber averaged 95.64% for the first set of three runs and 73.88% for the second set of three runs. Clearly, the use of foam blanket and polypropylene balls over the plating solution in Tank No. 8 resulted in a 97.77% decrease in chromium to the scrubber inlet. The average scrubber outlet emissions were also reduced by 85.59% compared with average outlet emissions of the first set of three runs.

TABLE S-1

SUMMARY OF TEST CONDITIONS AND ANALYTICAL RESULTS

Sample I.D.	Test Condition	Sampling Time Min.	Stack Temperature °F	% Moisture	% Isokinetic	Vm_{std} dscf	Q_{std} dscfm	Total Cr Mass Collected mg		CONCENTRATION		EMISSION RATE	
										mg/dscm	grain/dscf	lb/hr	Kg/hr
I-1	WOFB/PB	120	73	1.1417	99.6725	111.5784	2903.95	4.555[A]		1.4416	6.30×10^{-4}	1.568×10^{-2}	7.113×10^{-3}
I-2	WOFB/PB	120	75	1.5100	98.0572	112.7425	2982.58	5.346[A]		1.6745	7.32×10^{-4}	1.871×10^{-2}	8.485×10^{-3}
I-3	WOFB/PB	120	76	1.3055	97.1326	109.6680	2928.86	5.829[A]		1.8770	8.20×10^{-4}	2.059×10^{-2}	9.340×10^{-3}
Average	**N/A**	**120**	**74.67**	**1.3191**	**98.2874**	**111.3296**	**2938.46**	**5.243[A]**		**1.6644**	**7.27×10^{-4}**	**1.833×10^{-2}**	**8.313×10^{-3}**
I-4	WFB/PB	120	66	1.0094	95.9109	113.1701	3060.89	0.130[A]		0.0406	1.77×10^{-5}	4.651×10^{-4}	2.110×10^{-4}
I-5	WFB/PB	120	64	0.7930	96.9894	111.9567	2994.40	0.104[A]		0.0328	1.43×10^{-5}	3.679×10^{-4}	1.669×10^{-4}
I-6	WFB/PB	120	73	1.2648	96.7196	105.1597	2820.45	0.111[A]		0.0373	1.63×10^{-5}	3.938×10^{-4}	1.786×10^{-4}
Average	**N/A**	**120**	**67.67**	**1.0224**	**96.5400**	**110.0955**	**2958.58**	**0.115[A]**		**0.0369**	**1.61×10^{-5}**	**4.089×10^{-4}**	**1.855×10^{-4}**
O-1	WOFB/PB	120	68	1.8199	109.9126	51.9620	3208.08	0.0614[B]	0.0798[C]	0.0542	2.37×10^{-5}	6.517×10^{-4}	2.956×10^{-4}
O-2	WOFB/PB	120	74	1.7816	96.5318	53.4904	3760.21	0.0929[B]	0.0989[C]	0.0653	2.85×10^{-5}	9.96×10^{-4}	4.171×10^{-4}
O-3	WOFB/PB	120	68	0.5611	94.5008	51.7545	3716.37	0.0736[B]	0.0866[C]	0.0591	2.58×10^{-5}	8.225×10^{-4}	3.731×10^{-4}
Average	**N/A**	**120**	**70**	**1.3875**	**100.3151**	**52.4023**	**3561.55**	**0.0760[B]**	**0.0884[C]**	**0.0595**	**2.60×10^{-5}**	**7.979×10^{-4}**	**3.619×10^{-4}**
O-4	WFB/PB	120	59	1.3572	101.4518	47.5841	3182.80	0.0109[B]	0.01430[C]	0.0106	4.64×10^{-6}	1.265×10^{-4}	5.739×10^{-5}
O-5	WFB/PB	120	61	1.2067	94.6178	50.9027	3650.69	0.00938[B]	0.01180[C]	0.0082	3.58×10^{-6}	1.119×10^{-4}	5.078×10^{-5}
O-6	WFB/PB	120	74	1.4018	98.5758	48.7002	3352.49	0.00952[B*]	0.00897[C*]	0.0065	2.84×10^{-6}	8.168×10^{-5}	3.705×10^{-5}
Average	**N/A**	**120**	**64.67**	**1.3219**	**98.2151**	**49.0623**	**3395.33**	**0.00993[B]**	**0.01169[C]**	**0.0084**	**3.69×10^{-4}**	**1.067×10^{-4}**	**4.841×10^{-5}**

NOTES
[A] ICP analysis result
[B] IC/PCR analysis result
[C] GFAA analysis result

LEGEND
I - Inlet
O - Outlet
WFB/PB - With Foam Blanket and Polypropylene Balls
WOFB/PB - Without Foam Blanket and Polypropylene Balls
N/A - Not Applicable

*These results appear to be an analytical artifact. The mass collected for Cr^{+6} should not be greater than the mass collected for total chromium. This is due to the fact that the total chromium mass is comprised of Cr^{+6} and Cr^{+3} mass.

SECTION I
INTRODUCTION

The goal of the Electronic Chrome and Grinding Company test was to determine if the addition of a foam blanket and polypropylene balls to the plating bath would result in reduced chromium emissions from the outlet of the scrubber.

Testing was conducted during the week of February 17, 1992. Emission samples were collected using a modification of USEPA Method 13-B. Upon completion of field activities, samples were shipped to Research Triangle Institute Laboratory (RTIL) in Research Triangle Park, North Carolina for analysis. Outlet samples were analyzed for hexavalent chromium using ion chromatography with a post column reactor (ICPCR). Outlet samples were also analyzed for total chromium, using graphite furnace atomic absorption (GFAA). Inlet samples were analyzed for total chromium using inductively coupled plasma emission spectrometry (ICP). Scrubber water samples and plating tank solutions were also analyzed using ICP.

The primary organizations involved in the test program were Advanced Systems Technology, Inc. (AST), Electronic Chrome and Grinding Company (ECGC), Midwest Research Institute (MRI), and the U.S. EPA, Emission Measurement Branch (EMB).

SECTION II

PROCESS OPERATION

PROCESS DESCRIPTION

Electronic Chrome and Grinding Company is a medium-size job shop that performs hard chromium plating of industrial rolls, hydraulic cylinders, and miscellaneous parts. The shop has eight hard chromium plating tanks. The facility operates 1 shift/day, 5 days/week, 52 weeks/year.

During this source test program, Tank No. 8 was tested. Tank No. 8 is 2.2 meters (m) (7.3 feet [ft]) long, 1.1 m (3.5 ft) wide, and 1.8 m (6.0 ft) deep and holds approximately 3,900 liters (1,030 gallons) of plating solution. The plating solution consists of chromic acid at a concentration of 240 grams per liter (g/L) (32 ounces per gallon [oz/gal] of water). Sulfuric acid, a plating bath catalyst, is also present at a concentration of 2.4 g/L (0.32 oz/gal). The normal plating bath temperature is 54°C (130°F). The plating tank is typically operated with a foam blanket and polypropylene balls covering the surface of the plating solution. The foam blanket used in the plating tank is Fumetrol 101, manufactured by Harshaw M&T, Inc. The polypropylene balls used in the plating tank are 2.54 centimeters (cm) (1-inch [in.]) in diameter. The tank is equipped with two rectifiers that are rated at 6,000 and 2,000 amperes, respectively. However, only the 6,000-ampere rectifier is in active use on the tank . In addition, the tank is equipped with a heating and cooling system and is a air agitated to maintain uniform bath temperature and composition. An overhead hoist is used to transfer parts in and out of the plating tank.

AIR POLLUTION CONTROL

Plating Tank No. 8 is equipped with double-sided draft hoods to capture the chromic acid mist generated during plating. The ventilation rate on the plating tank is 85 cubic meters per minute m^3/min) (3,000 cubic feet per minute [ft^3/min]). The ventilation hoods on the tank are ducted to a single packed-bed scrubber that was manufactured and installed in 1982 by Tellkamp, Inc., in Santa Fe Springs, California.

As the gas stream enters the scrubber, the velocity of the gas stream is reduced, and recirculated water is sprayed countercurrent to the gas stream through a series of 16 spray nozzles to enlarge the chromic acid mist droplets prior to the packed-bed. The packed-bed is 1.4 m (4.5 ft) high, 1.1 m (3.7 ft) wide, and 0.9 m (3 ft) deep for a total packing volume of 1.4 m^3 (50 ft^3). The packing material used in the scrubber is 8.9-centimeter (cm) (3.5-inch [in.]) spherical-type mass packing made by Lanpac. As the gas stream flows through the packed-bed, the chromic acid droplets impinge on the packing material and drain to the bottom of the unit. Following the packed-bed section is a chevron-blade mist eliminator used to remove any reentrained water carried over from the packed-bed. Recirculated water is drained from the scrubber approximately once per day and utilized in the plating tank as make up for plating solution evaporation losses.

PROCESS CONDITIONS DURING TESTING

Three test runs were conducted to measure chromium concentrations at the inlet and outlet of the scrubber under the following conditions: Condition A - without a foam blanket or polypropylene balls in the plating tank; and Condition B - with a foam blanket and polypropylene balls in the plating tank. All six test runs were approximately 2 hours in duration. Test run No. 6 was interrupted for approximately 5 minutes due to the rectifier tripping off. All of the test runs were interrupted briefly to change test ports. No other process interruptions occurred during sampling.

Prior to chromium emissions testing, the scrubber was drained and cleaned with fresh water. In addition, the ductwork connecting the tank to the scrubber was also washed down prior to testing. After cleaning, the scrubber was recharged with fresh water. The first three emission test runs were then conducted without a foam blanket or polypropylene balls in the plating tank. Following the completion of these test runs, the scrubber and ductwork were recleaned, and the scrubber was recharged with fresh water. The next day, the three test runs were conducted with a foam blanket and polypropylene balls in the plating tank.

Process operating parameters monitored and recorded during each test run included the voltage, current, and plating bath temperature. During each test run, the same five dummy parts were plated in the plating tank. Fumetrol 101, manufactured by Harshaw M&T was the foam blanket used in the tank during the last three test runs. During these runs, the coverage and thickness of the foam blanket and polypropylene balls were also monitored. In addition, the scrubber was visually inspected prior to each series of test runs to ensure proper operation during testing. No malfunctions or deficiencies were found during these inspections. Process data sheets

documenting the process and control device operating parameters during mass emission testing are presented in Appendix E. A technical information brochure on the use of Fumetrol 101 is also included in Appendix E. Data on the average operating parameters recorded during the mass emission test runs are presented in Table 2-1. The total amount of current supplied to the tank during each test run is calculated in terms of ampere-hours and include in Appendix E. A tabular summary of the total current values is presented in Table 2-2.

Composite samples were taken from the plating tank and the scrubber recirculation sump to determine the chromic acid concentration during each mass emission test run. The chromic acid concentration of the composite sample is reported in Section III of this report.

TABLE 2-1.

AVERAGE OPERATING PARAMETERS MONITORED DURING EACH MASS EMISSION TEST RUN FOR PLATING TANK NO. 8

WITHOUT FOAM BLANKET

Run No.	Operating voltage, volts	Operating current, amperes	Operating temp., °F
1	6.3	4,800	133
2	6.1	5,100	137
3	5.8	5,100	138
Average	6.1	5,000	136

WITH FOAM BLANKET

Run No.	Operating voltage, volts	Operating current, amperes	Operating temp., °F
4	5.5	5,000	136
5	5.4	5,100	146
6	5.5	5,100	140
Average	5.5	5,066	141

TABLE 2-2.

TOTAL AMPERE-HOURS SUPPLIED TO PLATING TANK NO. 8 DURING MASS EMISSION TEST RUNS

Run No.	Total Current, Ampere-Hours[a]	
	Inlet	Outlet
1	9,600	9,600
2	10,200	10,200
3	10,200	10,200
4	10,100	10,100
5	10,200	10,200
6	10,100	10,100

[a]Total current (ampere-hours) is calculated by: (1) multiplying the current (amperes) by the actual time of testing (hours) at that particular current and (2) totaling the ampere-hour values for each time interval of the entire test run. The total ampere-hours calculated will not equal the ampere-hours from the ampere-hour meter due to the differences between the sampling time and the actual time required to complete the test. The sampling time and the time required to perform the test are different due to down time for port changes and other process interruptions.

SECTION III

SUMMARY AND DISCUSSION OF RESULTS

Simultaneous sample collections at the inlet and at the outlet of the scrubber under normal operating conditions of the plating process and control system were conducted at ECGC. Six (6) tests were conducted at each sampling site. A sampling time of approximately two hours was employed on each run to ensure collection of adequate quantities of chromium sample at each site.

In addition to the chromium emission samples, grab samples of the operating plating bath and scrubber water were collected during each sampling run. All samples were later analyzed off-site for total chromium. Graphite furnace atomic absorption spectrometry was used to analyze for total chromium on the outlet samples. Inductively coupled plasma emission spectrometry was used to analyze inlet samples, scrubber water samples and tank samples. Outlet samples were also analyzed for hexavalent chromium using ion chromatography with a post column reactor.

Emission concentrations at the inlet averaged 1.66 milligrams (mg) per dry standard cubic meter (dscm) for the first set of three runs and averaged 0.0369 mg/dscm for the second set of three runs. Emission concentrations at the outlet averaged 0.0595 mg/dscm for the first set of three runs, and 0.0084 mg/dscm for the second set of three runs. The efficiency, using mass emission rates expressed as lb/hr, of the control device averaged 95.6 percent for the first set of three runs and 73.9 percent for the second set of three runs.

The addition of polypropylene balls combined with a foam blanket reduced average emissions from the plating tank by 97.8 percent. This meant that less chromic acid entered the inlet side of the scrubber. The average outlet emissions were also reduced by 86.5 percent when compared with the average outlet emissions of the first set of runs.

The chromium removal efficiencies of the two sets of runs are misleading. The first set of runs had the higher average removal efficiency and also the higher average emission rate at the outlet. The second set of runs had the lower average efficiency rate and also had the lower average emission rate at the outlet. The concentration of total chromium at the inlet of the scrubber decreased significantly (97.8%) due to the use of the foam blanket and polypropylene balls.

Summary of Stack Gas Conditions

Stack gas conditions at each sampling location are presented in Table 3-1. Volumetric flow rates at each location showed some variations between runs. At the inlet, the velocity averaged 46.5 feet per second (fps), with an average temperature of 71°F and an average moisture content of 1.17%.

At the outlet, the velocity averaged 20.08 fps, with average temperatures of 67°F and an average moisture content of 1.35%.

The stack gases at all sampling locations were essentially ambient air and, therefore were assigned a dry molecular weight of 28.95 lb/lb mole. Variations of isokinetic sampling rates were within allowable limits on all sampling runs.

Calculation of Emission Results

The dry standard cubic feet sample volumes $(V_{m_{std}})$ from the dry gas meters and the sample mass collected (micrograms) were used to determine concentrations (mg/dscm and grain/dscf). The stack dry volumetric flow rates (Q_{std}) and concentrations were used to calculate mass emission rates (lb/hr and kg/hr).

Summary of Scrubber Removal Efficiencies

Chromium removal efficiencies for the scrubber system were determined by simultaneously sampling the inlet and the outlet of the scrubber. The mass emission rates were used to calculate removal efficiencies. Removal efficiency is represented by the equation:

$$RE = \frac{C_i - C_o}{C_i} \times 100$$

Where

RE = % Removal Efficiency

C_i = Mass emission rate at the scrubber inlet, lb/hr

C_o = Mass emission rate at the scrubber outlet, lb/hr

Mass emission rates are presented in Tables 3-2. and 3-3. The resultant removal efficiencies are reported in Table 3-4. A summary of the emissions from the scrubber, expressed as milligrams/ampere-hours, is presented in Table 3-5. Both ICP and GFAA are reported to be compatible techniques and therefore analytical results obtained from either can be used to make scrubber efficiency calculations.

Plating Tank Solution and Scrubber Rinse

During each sampling run, a grab sample of the plating solution was obtained from plating Tank No. 8. A sample of rinse water was obtained from the scrubber. In addition, during the runs, scrubber water samples were obtained at the beginning, middle, and end of the sampling period. The scrubber water and plating tank solution sample results are shown in Table 3-6.

TABLE 3-1.
SUMMARY OF STACK GAS CONDITIONS

INLET

Run No.	Velocity fps[a]	Stack Temp. °F	Flow Rate		Moisture %	% Isokinetic Variation
			acfm[b]	dscfm[c]		
1	45.9845	73	2,949.48	2,903.95	1.1417	99.6725
2	47.4476	75	3,043.33	2,982.58	1.5100	98.0572
3	46.6692	76	2,993.40	2,928.86	1.3055	97.1326
4	47.8253	66	3,067.56	3,060.89	1.0094	95.9109
5	46.6225	64	2,990.41	2,994.40	0.7930	96.9894
6	44.6702	73	2,865.19	2,820.45	1.2648	96.7196
Average	**46.5365**	**71**	**2,984.90**	**2,948.52**	**1.1707**	**97.4137**

OUTLET

Run No.	Velocity fps[a]	Stack Temp. °F	Flow Rate		Moisture %	% Isokinetic Variation
			acfm[b]	dscfm[c]		
1	18.5401	68	3,210.72	3,208.08	1.8199	109.9126
2	21.9701	74	3,804.72	3,760.21	1.7816	96.5318
3	21.4695	68	3,718.02	3,716.37	0.5611	94.5008
4	18.0805	59	3,131.12	3,182.80	1.3572	101.4518
5	20.8400	61	3,609.01	3,650.69	1.2067	94.6178
6	19.5972	74	3,393.78	3,352.49	1.4018	98.5758
Average	**20.0829**	**67**	**3,477.90**	**3,478.44**	**1.3547**	99.2651

[a]Feet per second at stack conditions
[b]Actual cubic feet per minute at stack conditions
[c]Dry standard cubic feet per minute at 68°F and 29.92" Hg

TABLE 3-2

TOTAL CHROMIUM CONCENTRATIONS
AND
MASS EMISSION RATES AT
INLET USING ICP ANALYSIS

Run No.	Total Mass Collected μg	Dry Gas Volume dscf	Volumetric Flow Rate dscfm	Emission Concentration Grain/dscf	Emission Concentration mg/dscm	Mass Emission Rate lb/hr	Mass Emission Rate Kg/hr
1*	4,555	111.5784	2,903.95	6.30×10^{-4}	1.4416	1.568×10^{-2}	7.113×10^{-3}
2*	5,346	112.7425	2,982.58	7.32×10^{-4}	1.6745	1.871×10^{-2}	8.485×10^{-3}
3*	5,829	109.6680	2,928.86	8.20×10^{-4}	1.8770	2.059×10^{-2}	9.340×10^{-3}
Average	**5,243**	**111.3296**	**2,938.463**	**7.27×10^{-4}**	**1.6644**	**1.83×10^{-2}**	**8.31×10^{-3}**
4**	130	113.1701	3,060.89	1.77×10^{-5}	0.0406	4.651×10^{-4}	2.110×10^{-4}
5**	104	111.9567	2,994.40	1.43×10^{-5}	0.0328	3.679×10^{-4}	1.669×10^{-4}
6**	111	105.1597	2,820.45	1.63×10^{-5}	0.0373	3.938×10^{-4}	1.786×10^{-4}
Average	**115**	**110.0955**	**2,958.58**	**1.61×10^{-5}**	**0.0369**	**4.09×10^{-4}**	**1.85×10^{-4}**

* Without Foam Blanket/and Polypropylene Balls
** With Foam Blanket/and Polypropylene Balls

TABLE 3-3

TOTAL CHROMIUM CONCENTRATIONS AND MASS EMISSION RATES AT OUTLET USING GRAPHITE FURNACE ATOMIC ABSORPTION ANALYSIS

Run No.	Total Mass Collected μg	Dry Gas Volume dscf	Volume Flow Rate dscfm	Emission Concentration Grain/dscf	Emission Concentration mg/dscm	Mass Emission Rate lb/hr	Mass Emission Rate Kg/hr
1*	79.80	51.9620	3,208.08	2.37×10^{-5}	0.0542	6.517×10^{-4}	2.956×10^{-4}
2*	98.90	53.4904	3,760.21	2.85×10^{-5}	0.0653	9.196×10^{-4}	4.171×10^{-4}
3*	86.60	51.7545	3,716.37	2.58×10^{-5}	0.0591	8.225×10^{-4}	3.731×10^{-4}
Average	**88.43**	**52.4023**	**3561.55**	**2.60×10^{-5}**	**0.0595**	**7.98×10^{-4}**	**3.62×10^{-4}**
4**	14.30	47.5841	3,182.80	4.64×10^{-6}	0.0106	1.265×10^{-4}	5.739×10^{-5}
5**	11.80	50.9027	3,650.69	3.58×10^{-6}	0.0082	1.119×10^{-4}	5.078×10^{-5}
6**	8.97	48.7002	3,352.49	2.84×10^{-6}	0.0065	8.168×10^{-5}	3.705×10^{-5}
Average	**11.69**	**49.0623**	**3,395.33**	**3.69×10^{-6}**	**0.0084**	**1.07×10^{-4}**	**4.84×10^{-5}**

* Without Foam Blanket/and Polypropylene Balls
** With Foam Blanket/and Polypropylene Balls

TABLE 3-4
SUMMARY OF SCRUBBER REMOVAL EFFICIENCIES

Total Cr - ICP Analysis for Inlet - GFAA for Outlet

		Mass Emission Rate lb/hr	Removal Efficiency %
WOFB/PB	Run No. 1 Inlet Outlet	 1.568×10^{-2} 6.517×10^{-4}	 95.84
	Run No. 2 Inlet Outlet	 1.871×10^{-2} 9.196×10^{-4}	 95.08
	Run No. 3 Inlet Outlet	 2.059×10^{-2} 8.225×10^{-4}	 96.01
Average			**95.64**
WFB/PB	Run No. 4 Inlet Outlet	 4.651×10^{-4} 1.265×10^{-4}	 72.80
	Run No. 5 Inlet Outlet	 3.679×10^{-4} 1.119×10^{-4}	 69.58
	Run No. 6 Inlet Outlet	 3.938×10^{-4} 8.168×10^{-5}	 79.26
Average			**73.88**

LEGEND
WOFB/PB - Without Foam Blanket and Polypropylene Balls
WFB/PB - With Foam Blanket and Polypropylene Balls

TABLE 3-5

SUMMARY OF THE SCRUBBER EMISSIONS
EXPRESSED AS MILLIGRAMS/AMPERE-HOUR

RUN NUMBER	TEST CONDITION	OUTLET (mg/amp-hr)
1	WOFB/PB	8.312×10^{-6}
2	WOFB/PB	9.696×10^{-6}
3	WOFB/PB	8.49×10^{-6}
4	WFB/PB	1.415×10^{-6}
5	WFB/PB	1.156×10^{-6}
6	WFB/PB	8.88×10^{-7}

LEGEND

WOFB/PB - Without foam blanket and polypropylene balls
WFB/PB - With foam blanket and polypropylene balls

TABLE 3-6

TOTAL CHROMIUM QUANTIFIED IN SCRUBBER WATER AND PLATING TANK SOLUTION SAMPLES USING ICP

SAMPLE IDENTIFICATION	TOTAL CHROMIUM CONCENTRATION (μg/ml)
Scrub Water Run 1	100.00
Scrub Water Run 2	124.00
Scrub Water Run 3	133.00
Scrub Water Run 4	49.50
Scrub Water Run 5	46.00
Scrub Water Run 6	51.30
Average	**83.97**
Tank Run 1	1.32×10^4
Tank Run 2	1.18×10^4
Tank Run 3	1.20×10^4
Tank Run 4	1.17×10^4
Tank Run 5	9.50×10^3
Tank Run 6	1.17×10^4
Average	**1.165×10^4**

SECTION IV

SAMPLING LOCATIONS

The location and number of traverse points to be sampled were determined using EPA Reference Method 1 "Sample and Velocity Traverses for Stationary Sources." These representative measurement sites were determined for both the inlet and the outlet sampling ducts. The inlet measurement site was on a horizontal duct which was circular with a diameter of 14 inches. The sample site was located just before the scrubber approximately 10 feet from the downstream disturbance and 5 feet from the upstream disturbance. It was determined and calculated using Method 1, that there would be eight traverse points sampled; four points along the vertical and horizontal diameters. Since the test runs was two hours long, a six point traverse was chosen to simplify time keeping for recording the data. Figure 4-1 shows stack dimensions. Figure 4-2 shows the locations of inlet traverse points. Figure 4-3 shows the inlet measurement site.

The outlet measurement site was located approximately 2 feet from the upstream disturbance and approximately 4 feet from the downstream disturbance. The outlet from the scrubber was a horizontal, plywood duct measuring 23.75 inches high and 17.5 inches wide. Four port holes were cut into the side of the duct and six points were sampled at each port according to EPA Method 1 criteria. Figure 4-4 shows the outlet dimensions and sampling ports. Figure 4-5 shows the locations of outlet traverse points.

The absence of cyclonic flow was verified prior to sampling using EPA Reference Method 1. Liquid samples were collected from the plating tank during each of the six runs. Samples were also collected from the scrubber solution tank. A composite sample of the scrubber water was taken at the beginning, middle, and end of each run. There were twelve samples taken in total (six plating tank samples/six scrubber water samples). The samples were labeled, sealed and then sent to RTIL for analysis.

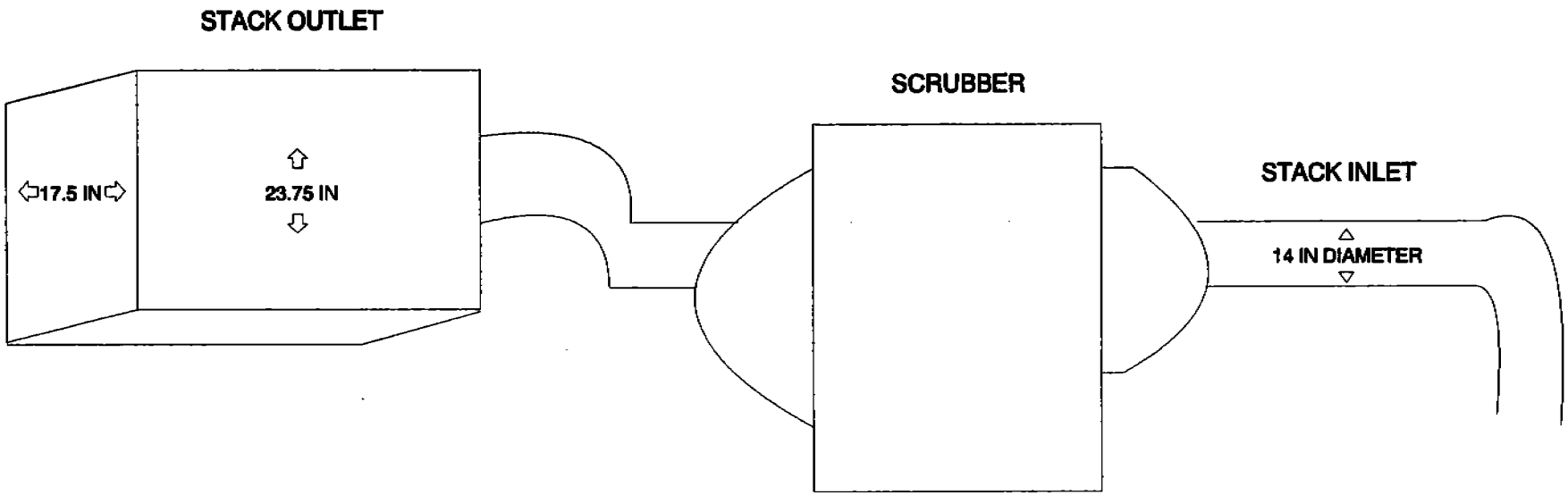

FIGURE 4-1 STACK DIMENSIONS

(DRAWING IS NOT TO SCALE)

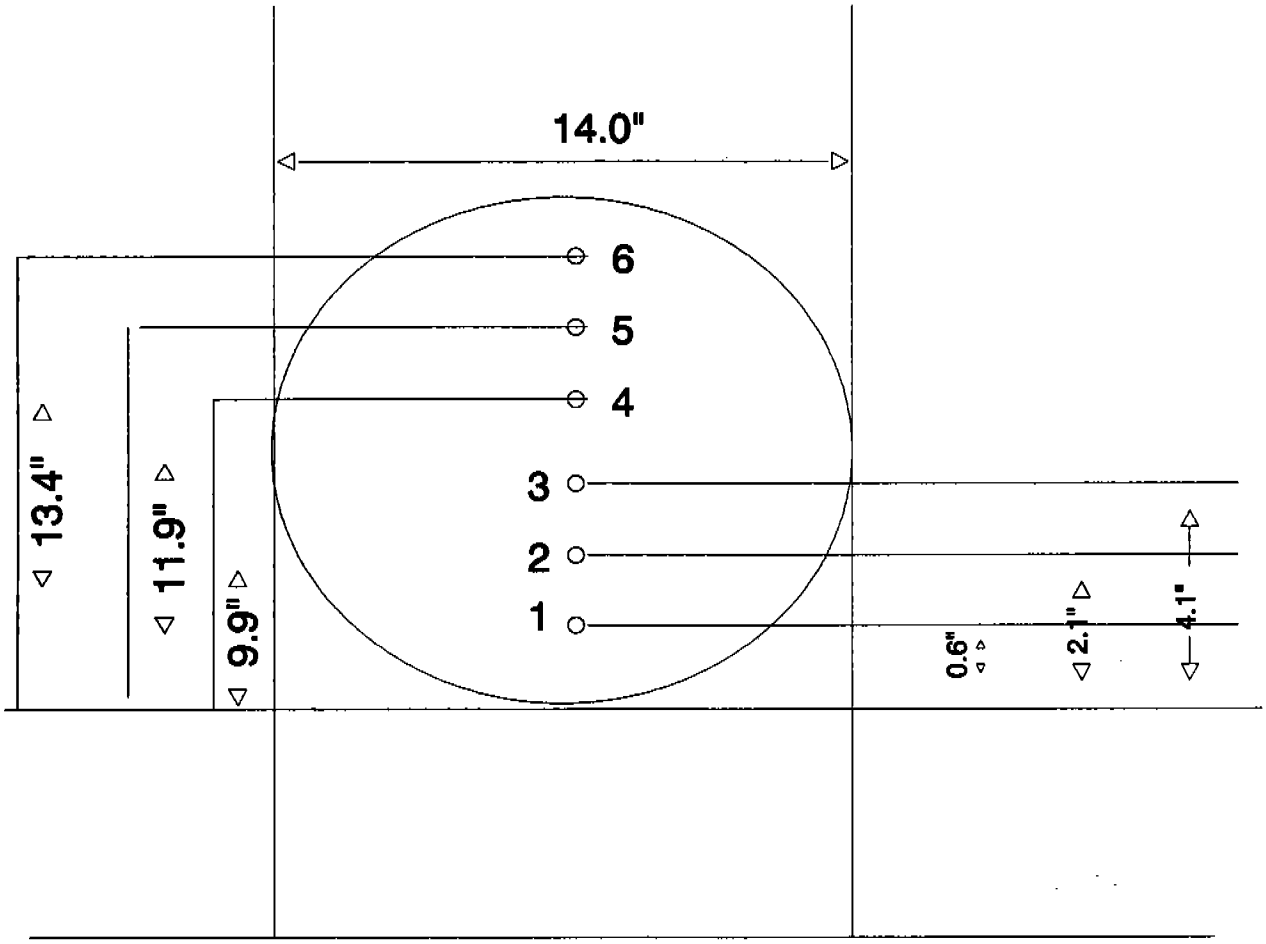

FIGURE 4-2 INLET TRAVERSE POINT LOCATIONS

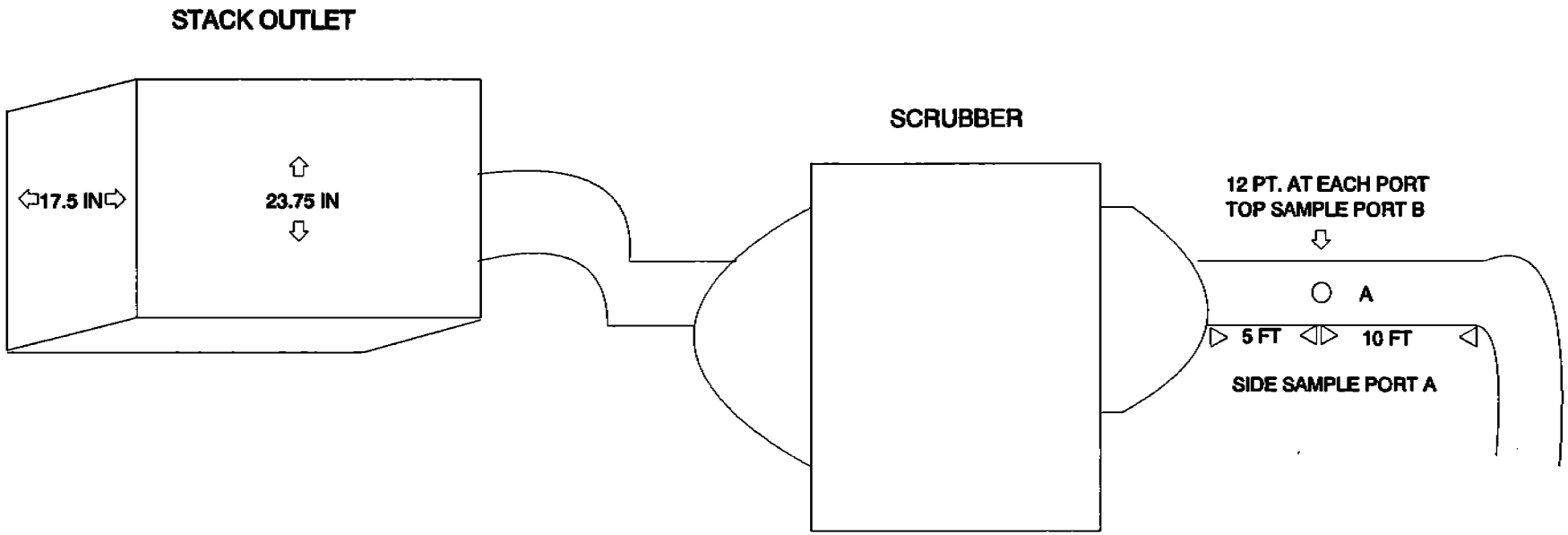

NOTE: THE INLET MEASUREMENT SITE WAS APPROX. 5FT. FROM THE UPSTREAM DISTURBANCE AND APPROX.10FT. FROM THE DOWNSRTEAM DISTRUBANCE.

FIGURE 4-3 INLET MEASUREMENT SITE

(DRAWING IS NOT TO SCALE)

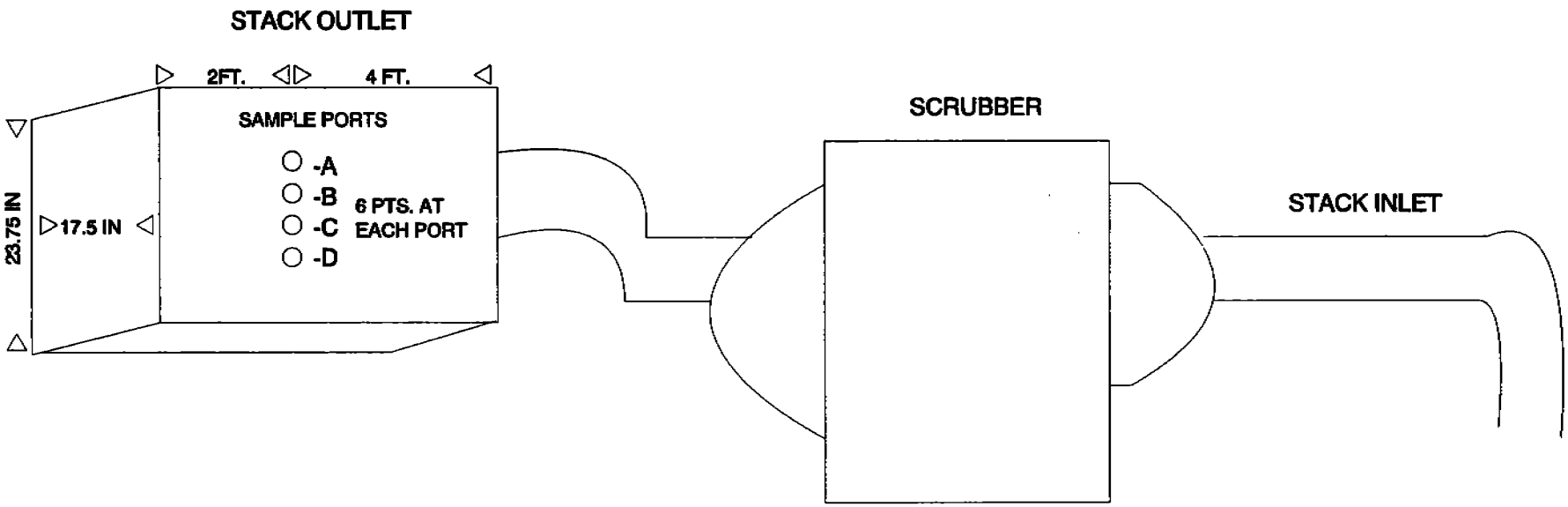

NOTE: 1) THE OUTLET WAS CONSTRUCTED OF WOOD.
2) THE OUTLET MEASUREMENT SITE WAS APPROX. 2 FT. FROM THE UPSTREAM DISTURBANCE AND APPROX. 4 FT. FROM THE DOWNSTREAM DISTURBANCE.

FIGURE 4-4 OUTLET DIMENSIONS AND SAMPLING PORTS

(DRAWING IS NOT TO SCALE)

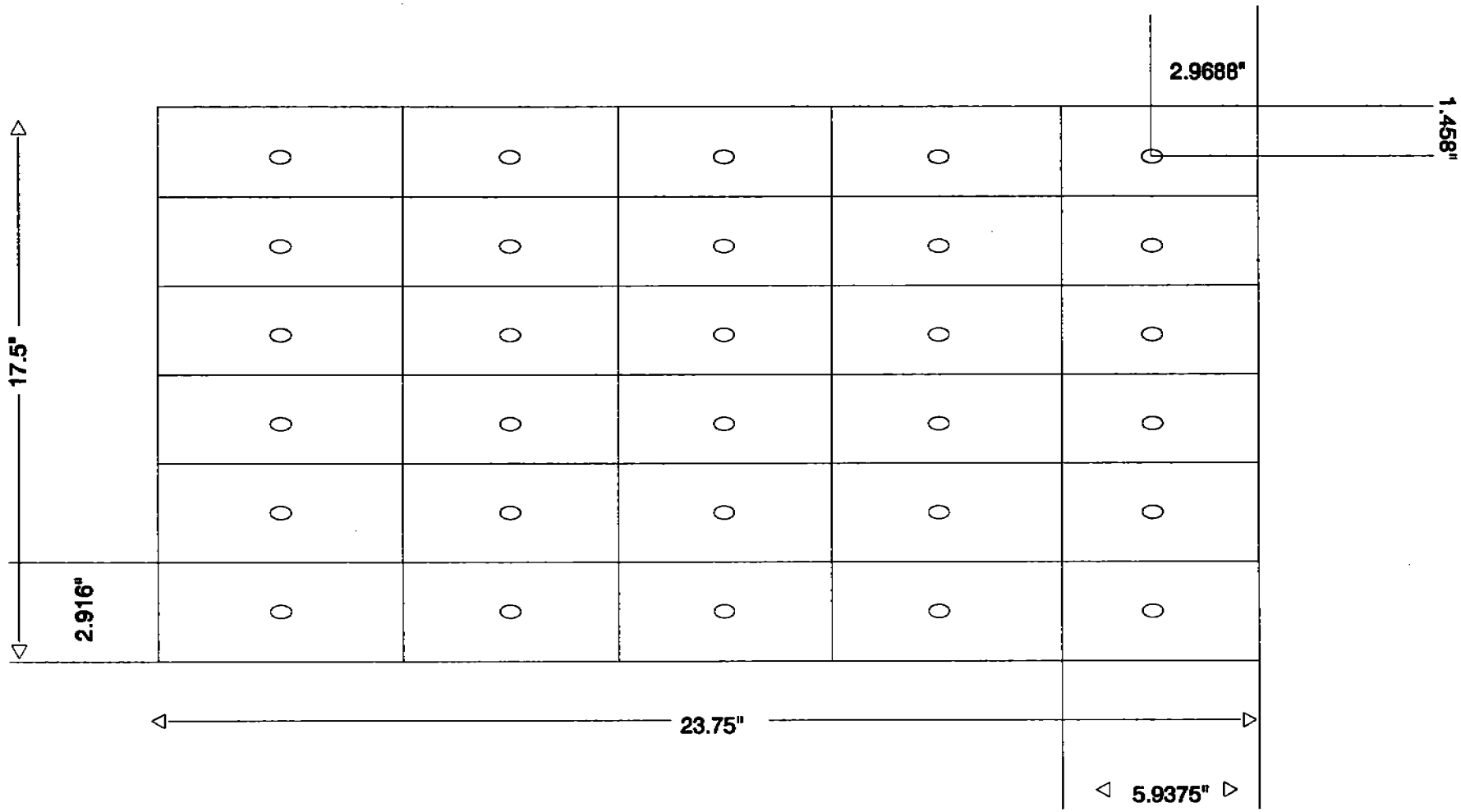

FIGURE 4-5 OUTLET TRAVERSE POINT LOCATIONS

SECTION V

SAMPLING AND ANALYTICAL PROCEDURES

EPA Reference Methods 1, 2, 4 and a Modification of 13-B were used during this test. These methods can be found in 40 CFR, Parts 53-60. Method 1 was used to determine sample and velocity traverses for stationary sources. Method 2 was used for the determination of stack gas velocity and volumetric flow rate using a type "S" pitot tube. Method 4 was used to determine the moisture content in stack gases. The Modified U.S. EPA Method 13-B sample train was used to collect chromium emission samples. The sample train consisted of a glass button-hook nozzle, an unheated Pyrex glass-lined probe, and a series of four impingers. The first, third and fourth are modified Greenburg-Smith impingers. The second impinger was a standard Greenburg-Smith impinger.

The first and second impinger each contained 100 ml of 0.1N NaOH. The third impinger was empty and the fourth impinger contained approximately 200 grams of silica gel. The remainder of the sampling system consisted of a vacuum pump, dry gas meter, calibrated orifice and related temperature and pressure indicating apparatus, which was used to determine dry gas sample volume, stack gas temperature, volumetric flow rates and isokinetic sampling rates. Figure 5-1 shows a schematic of the Modified U.S. EPA Method 13-B sample train.

Runs were conducted at both the inlet and outlet locations. Method 3 (gas composition) was not used since ambient air is the main constituent in the gas stream. The ambient air was assigned the dry molecular weight of 28.95 lb/lb mole. The stack gas velocity was determined during each sampling run. Since the stack gas was ambient air, an initial moisture estimate of 1% was used for determining the sampling rate.

CONTAINER I.D.	CONTAINER CONTENT
Impinger #1	Modified Greenburg-Smith→ 100 ml of 0.1N NaOH
Impinger #2	Greenburg-Smith→ 100 ml of 0.1N NaOH
Impinger #3	Modified Greenburg-Smith→ Empty
Impinger #4	Modified Greenburg-Smith→ 200 grams of Silica Gel

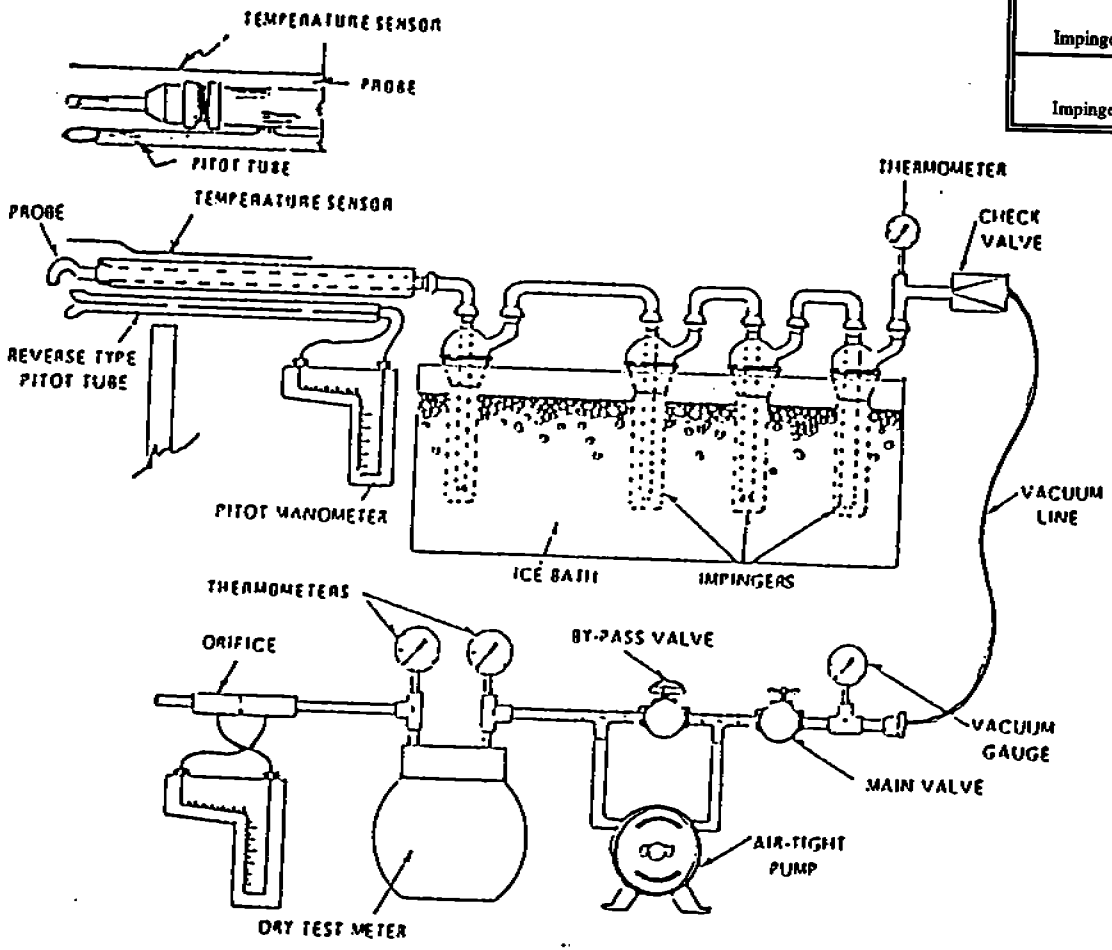

Figure 5-1. Schematic of the Modified U.S. EPA Method 13-B Sampling Train

ANALYTICAL PROCEDURES

Upon completion of the field activities, the chromium emission test samples were packed in coolers and submitted to a contract laboratory, RTIL, to be analyzed for total chromium and hexavalent chromium. Total chromium analysis was performed on inlet, tank and scrubber solution samples using ICP. Outlet samples were analyzed for total chromium using GFAA and hexavalent chromium using ion chromatography with a post column reactor.

SECTION VI

QUALITY ASSURANCE PROCEDURES

The quality assurance activities for this project were performed to assure the accuracy of data collected. The procedures used are contained in the "Quality Assurance Handbook for Air Pollution Measurement Systems," Volume III, "Stationary Source Specific Methods." Company-specific quality assurance activities were also conducted during our testing.

The QA program has two components: 1) field-related component; and 2) contract laboratory component. A discussion of the field-related QA component focusing on field procedures is given below. The contract laboratory component will be provided in letter format directly to the EPA Task Manager, Mr. Frank Clay.

FIELD-RELATED QUALITY ASSURANCE PROCEDURES

Our field related QA procedures include:

- Calibrating meters (pre and post testing)
- Calibrating the triple beam balance
- Leak testing (pre and post run testing)
- Measuring inside diameters of nozzles using a micrometer
- Cleaning and maintaining sample train equipment on a frequent basis
- Inspecting sample train prior to sampling
- Reviewing and discussing test plan prior to sampling
- Reviewing field data at the end of each work day
- Preparing an accurate and detailed "*Chain of Custody*"

Discussions of the field blanks, Chain of Custody and sample train components are provided below.

FIELD BLANK QUALITY ASSURANCE PROCEDURES

Reagent blanks of 0.1N NaOH absorbing solutions were prepared in the field using deionized water and NaOH pellets "sealed" from Fisher Scientific. After mixing the solution, the solution was transferred to a polyethylene bottle. The 0.1N NaOH was used to wash the sampling train components after each test run.

CHAIN OF CUSTODY

The samples collected at the test site were labeled, sealed and then placed in a package. The package was then filled with vermiculite and sealed using Chain of Custody tape. This process was performed to maintain the integrity of all the samples collected.

RTIL personnel informed AST by phone that all the samples had arrived safely, unsealed and undamaged. A copy of the Chain of Custody is included in Appendix D.

SAMPLE TRAIN COMPONENTS

The equipment used in the tests including nozzles, pitot tubes, dry gas meters, orifices, and thermocouples were calibrated in accordance with calibration procedures specified in applicable EPA Reference Methods prior to, and at the completion of, the test program. The equipment calibration data are presented in Appendix J.

TEST PROGRAM PERSONNEL

The following is a list of the field team personnel involved in the completion of this test program:

Robert E. Turner - Program Manager, AST

Thomas Yaroch - Assistant Project Manager, AST

James Parker - Technician

Jim Dini - Meter Reader

Chuck Hames - Meter Reader

Robin Barker - Midwest Research Institute

The following is a summary of field events:

2/16/92	Traveled to Santa Fe Springs, CA
2/17/92	Inventoried equipment; Prepared site
2/18/92	Conducted three, two-hour Measurement Runs at Scrubber Inlet and Outlet; Recovered and stored emission samples
2/19/92	Conducted three, two-hour Measurement Runs at Scrubber Inlet and Outlet; Recovered and stored emission samples
2/20/92	Restored site; Packed and shipped equipment
2/21/92	Traveled to Atlanta, GA.

APPENDIX "A"

COMPUTER PRINT OUT OF FIELD DATA

INITIAL DATA VALUES		CALCULATED VALUES
	PLANT- Electronic Chrome and Grinding	
	DATE- November 22, 1992	
	LOCATION-Santa Fe Springs, CA	
	RUN- Inlet 1	

DIA. OF STACK OR CROSS SECTION
14.0000 IN. OR 0.0000 L 0.0000 W IN.

CATCH

FRONT HALF	4555.0000 ug.
BACK HALF	0.0000 ug.
TOTAL	4555.0000 ug.

BAROMETRIC PRESSURE Pbar 30.18 in. Hg	Ym METER CORRECTION FACTOR 0.9850
STACK STATIC PRESSURE Pst -2.10 in. HOH	NET TIME OF TEST Tt 120 min.
ESTIMATED % MOISTURE 1.0	PITOT COEFFICIENT 0.84
DIA. OF NOZZLE 0.2510 in.	Vw TOTAL H2O COLLECTED 27.36 ml
METER DELTA H@ 1.8900 in. HOH	Np # OF POINTS 24

%CO2	%O2	%N2
0.70	21.00	78.30

Milligrams/Dry Std. Cubic Meter = 1.4416

Grains/Dry Std. Cubic Ft. = 6.30E-04

Lbs./Hour = 1.568E-02 Kilograms/Hour = 7.113E-03

AFCM	DSCFM
2949.48	2903.95

Vw gas 1.2887 CF	Vm Std. 111.5784 CF	STACK GAS PRESSURE Ps 30.0256 in. HOH
TRUE % M 1.1417	AVE. DELTA P 0.6675 in. HOH	MWd MOL WT. OF STACK GAS 28.9520
Md 0.9900	AVE. DELTA H 3.20 in. HOH	AVE. SQRT DELTA P 18.8442
Bws(est) 0.0100	AVE. Ts 73 F	PER CENT ISOKINETIC %I 99.6725
Vm TOTAL 114.3230 CF	AVE. Tm 82 F	Vs STACK GAS VELOCITY 45.9845 f/s

MW MOL. WT. OF STACK GAS WET= 28.8425

LEAK CHECK

GAS METER READING

	START	STOP	COMENTS
1	0.0000	0.0000	
2	0.0000	0.0000	
3	0.0000	0.0000	
4	0.0000	0.0000	
5	0.0000	0.0000	

INITIAL DATA VALUES		CALCULATED VALUES
	PLANT- Electronic Chrome and Grinding	
	DATE- November 22,1992	
	LOCATION- Santa Fe Springs, CA	
	RUN- Inlet 2	

DIA. OF STACK OR CROSS SECTION 14.0000 IN. OR 0.0000 L 0.0000 W IN.	Milligrams/Dry Std. Cubic Meter = 1.6745 Grains/Dry Std. Cubic Ft. = 7.32E-04
CATCH FRONT HALF 5346.0000 ug. BACK HALF 0.0000 ug. TOTAL 5346.0000 ug.	Lbs./Hour = 1.871E-02 Kilograms/Hour = 8.485E-03 AFCM DSCFM 3043.33 2982.58
BAROMETRIC PRESSURE Pbar 30.18 in. Hg	Ym METER CORRECTION FACTOR 0.9850	Vw gas 1.7286 CF	Vm Std. 112.7425 CF	STACK GAS PRESSURE Ps 30.0256 in. HOH
STACK STATIC PRESSURE Pst -2.10 in. HOH	NET TIME OF TEST Tt 120 min.	TRUE % M 1.5100	AVE. DELTA P 0.7083 in. HOH	MWd MOL WT. OF STACK GAS 28.9520
ESTIMATED % MOISTURE 1.0	PITOT COEFFICIENT 0.84	Md 0.9900	AVE. DELTA H 3.40 in. HOH	AVE. SQRT DELTA P 19.4438
DIA. OF NOZZLE 0.2510 in.	Vw TOTAL H2O COLLECTED 36.70 ml	Bws(est) 0.0100	AVE. Ts 75 F	PER CENT ISOKINETIC %I 98.0572
METER DELTA H@ 1.8900 in. HOH	Np # OF POINTS 24	Vm TOTAL 116.5700 CF	AVE. Tm 87 F	Vs STACK GAS VELOCITY 47.4476 f/s
%CO2 %O2 %N2 0.70 21.00 78.30		MW MOL. WT. OF STACK GAS WET= 28.8425		

LEAK CHECK

GAS METER READING

	START	STOP	COMENTS
1	0.0000	0.0000	
2	0.0000	0.0000	
3	0.0000	0.0000	
4	0.0000	0.0000	
5	0.0000	0.0000	

INITIAL DATA VALUES		CALCULATED VALUES
	PLANT- Electronic Chrome and Grinding	
	DATE- November 22, 1992	
	LOCATION- Santa Fe Springs, CA	
	RUN- Inlet 3	

DIA. OF STACK OR CROSS SECTION 14.0000 IN. OR 0.0000 L 0.0000 W IN.	Milligrams/Dry Std. Cubic Meter = 1.8770
	Grains/Dry Std. Cubic Ft. = 8.20E-04
CATCH FRONT HALF 5829.0000 ug. BACK HALF 0.0000 ug. TOTAL 5829.0000 ug.	Lbs./Hour = 2.059E-02 Kilograms/Hour = 9.340E-03 AFCM DSCFM 2993.40 2928.86
BAROMETRIC PRESSURE Pbar 30.18 in. Hg Ym METER CORRECTION FACTOR 0.9850	Vw gas 1.4507 CF Vm Std. 109.6680 CF STACK GAS PRESSURE Ps 30.0256 in. HOH
STACK STATIC PRESSURE Pst -2.10 in. HOH NET TIME OF TEST Tt 120 min.	TRUE % M 1.3055 AVE. DELTA P 0.6829 in. HOH MWd MOL WT. OF STACK GAS 28.9520
ESTIMATED % MOISTURE 1.0 PITOT COEFFICIENT 0.84	Md 0.9900 AVE. DELTA H 3.28 in. HOH AVE. SQRT DELTA P 19.1248
DIA. OF NOZZLE 0.2510 in. Vw TOTAL H2O COLLECTED 30.80 ml	Bws(est) 0.0100 AVE. Ts 76 F PER CENT ISOKINETIC %I 97.1326
METER DELTA H@ 1.8900 in. HOH Np # OF POINTS 24	Vm TOTAL 112.0980 CF AVE. Tm 81 F Vs STACK GAS VELOCITY 46.6692 f/s
%CO2 0.70 %O2 21.00 %N2 78.30	MW MOL. WT. OF STACK GAS WET= 28.8425

LEAK CHECK

GAS METER READING

	START	STOP	COMENTS
1	0.0000	0.0000	
2	0.0000	0.0000	
3	0.0000	0.0000	
4	0.0000	0.0000	
5	0.0000	0.0000	

INITIAL DATA VALUES		CALCULATED VALUES
	PLANT- Electronic Chrome and Grinding	
	DATE- November 22, 1992	
	LOCATION-Santa Fe Springs, CA	
	RUN- Inlet 4	

DIA. OF STACK OR CROSS SECTION 14.0000 IN. OR 0.0000 L 0.0000 W IN.	Milligrams/Dry Std. Cubic Meter = 0.0406 Grains/Dry Std. Cubic Ft. = 1.77E-05
CATCH FRONT HALF 130.0000 ug. BACK HALF 0.0000 ug. TOTAL 130.0000 ug.	Lbs./Hour = 4.651E-04 Kilograms/Hour = 2.110E-04 AFCM DSCFM 3067.56 3060.89
BAROMETRIC PRESSURE Pbar 30.18 in. Hg	Ym METER CORRECTION FACTOR 0.9850	Vw gas Vm Std. STACK GAS PRESSURE Ps 1.1540 CF 113.1701 CF 30.0256 in. HOH
STACK STATIC PRESSURE Pst -2.10 in. HOH	NET TIME OF TEST Tt 120 min.	TRUE % M AVE. DELTA P MWd MOL WT. OF STACK GAS 1.0094 0.7313 in. HOH 28.9520
ESTIMATED % MOISTURE 1.0	PITOT COEFFICIENT 0.84	Md AVE. DELTA H AVE. SQRT DELTA P 0.9900 3.51 in. HOH 19.5986
DIA. OF NOZZLE 0.2510 in.	Vw TOTAL H2O COLLECTED 24.50 ml	Bws(est) AVE. Ts PER CENT ISOKINETIC %I 0.0100 66 F 95.9109
METER DELTA Hø 1.8900 in. HOH	Np # OF POINTS 24	Vm TOTAL AVE. Tm Vs STACK GAS VELOCITY 114.8010 CF 77 F 47.8253 f/s
%CO2 %O2 %N2 0.70 21.00 78.30	MW MOL. WT. OF STACK GAS WET= 28.8425

LEAK CHECK

GAS METER READING

	START	STOP	COMENTS
1	0.0000	0.0000	
2	0.0000	0.0000	
3	0.0000	0.0000	
4	0.0000	0.0000	
5	0.0000	0.0000	

PLANT- Electronic Chrome and Grinding
DATE- November 22, 1992
LOCATION- Santa Fe Springs, CA
RUN- Inlet 5

INITIAL DATA VALUES

DIA. OF STACK OR CROSS SECTION
14.0000 IN. OR 0.0000 L 0.0000 W IN.

CATCH

FRONT HALF	104.0000 ug.
BACK HALF	0.0000 ug.
TOTAL	104.0000 ug.

BAROMETRIC PRESSURE Pbar	Ym METER CORRECTION FACTOR
30.18 in. Hg	0.9850
STACK STATIC PRESSURE Pst	NET TIME OF TEST Tt
-2.10 in. HOH	120 min.
ESTIMATED % MOISTURE	PITOT COEFFICIENT
1.0	0.84
DIA. OF NOZZLE	Vw TOTAL H2O COLLECTED
0.2510 in.	19.00 ml
METER DELTA H@	Np # OF POINTS
1.8900 in. HOH	24

%CO2	%O2	%N2
0.70	21.00	78.30

CALCULATED VALUES

Milligrams/Dry Std. Cubic Meter = 0.0328

Grains/Dry Std. Cubic Ft. = 1.43E-05

Lbs./Hour = 3.679E-04 Kilograms/Hour = 1.669E-04

AFCM	DSCFM
2990.41	2994.40

Vw gas	Vm Std.	STACK GAS PRESSURE Ps
0.8949 CF	111.9567 CF	30.0256 in. HOH
TRUE % M	AVE. DELTA P	MWd MOL WT. OF STACK GAS
0.7930	0.6975 in. HOH	28.9520
Md	AVE. DELTA H	AVE. SQRT DELTA P
0.9900	3.34 in. HOH	19.1057
Bws(est)	AVE. Ts	PER CENT ISOKINETIC %I
0.0100	64 F	96.9894
Vm TOTAL	AVE. Tm	Vs STACK GAS VELOCITY
117.2630 CF	94 F	46.6225 f/s

MW MOL. WT. OF STACK GAS WET= 28.8425

LEAK CHECK

GAS METER READING

	START	STOP	COMENTS
1	0.0000	0.0000	
2	0.0000	0.0000	
3	0.0000	0.0000	
4	0.0000	0.0000	
5	0.0000	0.0000	

PLANT- Electronic Chrome and Grinding
DATE- November 22, 1992
LOCATION-Santa Fe Springs,CA
RUN- Inlet 6

INITIAL DATA VALUES

DIA. OF STACK OR CROSS SECTION
14.0000 IN. OR 0.0000 L 0.0000 W IN.

CATCH

FRONT HALF	111.0000 ug.
BACK HALF	0.0000 ug.
TOTAL	111.0000 ug.

BAROMETRIC PRESSURE Pbar	30.18 in. Hg
Ym METER CORRECTION FACTOR	0.9850
STACK STATIC PRESSURE Pst	-2.30 in. HOH
NET TIME OF TEST Tt	120 min.
ESTIMATED % MOISTURE	1.0
PITOT COEFFICIENT	0.84
DIA. OF NOZZLE	0.2510 in.
Vw TOTAL H2O COLLECTED	28.60 ml
METER DELTA H@	1.8900 in. HOH
Np # OF POINTS	24

%CO2	%O2	%N2
0.70	21.00	78.30

CALCULATED VALUES

Milligrams/Dry Std. Cubic Meter = 0.0373

Grains/Dry Std. Cubic Ft. = 1.63E-05

Lbs./Hour = 3.938E-04 Kilograms/Hour = 1.786E-04

AFCM	DSCFM
2865.19	2820.45

Vw gas	Vm Std.	STACK GAS PRESSURE Ps
1.3471 CF	105.1597 CF	30.0109 in. HOH

TRUE % M	AVE. DELTA P	MWd MOL WT. OF STACK GAS
1.2648	0.6300 in. HOH	28.9520

Md	AVE. DELTA H	AVE. SQRT DELTA P
0.9900	3.02 in. HOH	18.3012

Bws(est)	AVE. Ts	PER CENT ISOKINETIC %I
0.0100	73 F	96.7196

Vm TOTAL	AVE. Tm	Vs STACK GAS VELOCITY
108.3850 CF	85 F	44.6702 f/s

MW MOL. WT. OF STACK GAS WET= 28.8425

LEAK CHECK

GAS METER READING

	START	STOP	COMENTS
1	0.0000	0.0000	
2	0.0000	0.0000	
3	0.0000	0.0000	
4	0.0000	0.0000	
5	0.0000	0.0000	

PLANT- Electronic Chrome and Grinding
DATE- November 22, 1992
LOCATION- Santa Fe Springs, CA
RUN- Outlet 1

INITIAL DATA VALUES

DIA. OF STACK OR CROSS SECTION
0.0000 IN. OR 17.5000 L 23.7500 W IN.

CATCH

FRONT HALF	79.8000 ug.
BACK HALF	0.0000 ug.
TOTAL	79.8000 ug.

BAROMETRIC PRESSURE Pbar: 30.18 in. Hg

Ym METER CORRECTION FACTOR: 0.9790

STACK STATIC PRESSURE Pst: 0.07 in. HOH

NET TIME OF TEST Tt: 120 min.

ESTIMATED % MOISTURE: 1.0

PITOT COEFFICIENT: 0.84

DIA. OF NOZZLE: 0.2550 in.

Vw TOTAL H2O COLLECTED: 20.45 ml

METER DELTA H@: 1.9470 in. HOH

Np # OF POINTS: 24

%CO2: 0.70 %O2: 21.00 %N2: 78.30

CALCULATED VALUES

Milligrams/Dry Std. Cubic Meter = 0.0542

Grains/Dry Std. Cubic Ft. = 2.37E-05

Lbs./Hour = 6.517E-04 Kilograms/Hour = 2.956E-04

AFCM: 3210.72 DSCFM: 3208.08

Vw gas: 0.9632 CF Vm Std.: 51.9620 CF STACK GAS PRESSURE Ps: 30.1851 in. HOH

TRUE % M: 1.8199 AVE. DELTA P: 0.1150 in. HOH MWd MOL WT. OF STACK GAS: 28.9520

Md: 0.9900 AVE. DELTA H: 0.58 in. HOH AVE. SQRT DELTA P: 7.6178

Bws(est): 0.0100 AVE. Ts: 68 F PER CENT ISOKINETIC %I: 109.9126

Vm TOTAL: 53.5950 CF AVE. Tm: 79 F Vs STACK GAS VELOCITY: 18.5401 f/s

MW MOL. WT. OF STACK GAS WET= 28.8425

LEAK CHECK

GAS METER READING

	START	STOP	COMENTS
1	0.0000	0.0000	
2	0.0000	0.0000	
3	0.0000	0.0000	
4	0.0000	0.0000	
5	0.0000	0.0000	

PLANT- Electronic Chrome and Grinding
DATE- November 22, 1992
LOCATION-Santa Fe Springs, CA
RUN- Outlet 2

INITIAL DATA VALUES

DIA. OF STACK OR CROSS SECTION
0.0000 IN. OR 17.5000 L 23.7500 W IN.

CATCH

FRONT HALF	98.9000 ug.
BACK HALF	0.0000 ug.
TOTAL	98.9000 ug.

BAROMETRIC PRESSURE Pbar	30.18 in. Hg
Ym METER CORRECTION FACTOR	0.9790
STACK STATIC PRESSURE Pst	0.07 in. HOH
NET TIME OF TEST Tt	120 min.
ESTIMATED % MOISTURE	1.0
PITOT COEFFICIENT	0.84
DIA. OF NOZZLE	0.2550 in.
Vw TOTAL H2O COLLECTED	20.60 ml
METER DELTA H@	1.9470 in. HOH
Np # OF POINTS	24

%CO2	%O2	%N2
0.70	21.00	78.30

CALCULATED VALUES

Milligrams/Dry Std. Cubic Meter = 0.0653

Grains/Dry Std. Cubic Ft. = 2.85E-05

Lbs./Hour = 9.196E-04 Kilograms/Hour = 4.171E-04

AFCM	DSCFM
3804.72	3760.21

Vw gas	Vm Std.	STACK GAS PRESSURE Ps
0.9703 CF	53.4904 CF	30.1851 in. HOH

TRUE % M	AVE. DELTA P	MWd MOL WT. OF STACK GAS
1.7816	0.1558 in. HOH	28.9520

Md	AVE. DELTA H	AVE. SQRT DELTA P
0.9900	0.74 in. HOH	9.0271

Bws(est)	AVE. Ts	PER CENT ISOKINETIC %I
0.0100	74 F	96.5318

Vm TOTAL	AVE. Tm	Vs STACK GAS VELOCITY
55.7700 CF	85 F	21.9701 f/s

MW MOL. WT. OF STACK GAS WET= 28.8425

|| LEAK CHECK ||

GAS METER READING

	START	STOP	COMENTS
1	0.0000	0.0000	
2	0.0000	0.0000	
3	0.0000	0.0000	
4	0.0000	0.0000	
5	0.0000	0.0000	

INITIAL DATA VALUES		CALCULATED VALUES
	PLANT- Electronic Chrome and Grinding	
	DATE- November 22, 1992	
	LOCATION- Santa Fe Springs, CA	
	RUN- Outlet 3	

DIA. OF STACK OR CROSS SECTION 0.0000 IN. OR 17.5000 L 23.7500 W IN.	Milligrams/Dry Std. Cubic Meter = 0.0591
	Grains/Dry Std. Cubic Ft. = 2.58E-05
CATCH FRONT HALF 86.6000 ug. BACK HALF 0.0000 ug. TOTAL 86.6000 ug.	Lbs./Hour = 8.225E-04 Kilograms/Hour = 3.731E-04
	AFCM DSCFM 3718.02 3716.37
BAROMETRIC PRESSURE Pbar 30.18 in. Hg	Ym METER CORRECTION FACTOR 0.9790
	Vw gas Vm Std. STACK GAS PRESSURE Ps 0.2920 CF 51.7545 CF 30.1851 in. HOH
STACK STATIC PRESSURE Pst 0.07 in. HOH	NET TIME OF TEST Tt 120 min.
	TRUE % M AVE. DELTA P MWd MOL WT. OF STACK GAS 0.5611 0.1517 in. HOH 28.9520
ESTIMATED % MOISTURE 1.0	PITOT COEFFICIENT 0.84
	Md AVE. DELTA H AVE. SQRT DELTA P 0.9900 0.71 in. HOH 8.8214
DIA. OF NOZZLE 0.2550 in.	Vw TOTAL H2O COLLECTED 6.20 ml
	Bws(est) AVE. Ts PER CENT ISOKINETIC %I 0.0100 68 F 94.5008
METER DELTA HΩ 1.9470 in. HOH	Np # OF POINTS 24
	Vm TOTAL AVE. Tm Vs STACK GAS VELOCITY 53.3650 CF 79 F 21.4695 f/s
%CO2 %O2 %N2 0.70 21.00 78.30	MW MOL. WT. OF STACK GAS WET= 28.8425

LEAK CHECK

GAS METER READING

	START	STOP	COMENTS
1	0.0000	0.0000	
2	0.0000	0.0000	
3	0.0000	0.0000	
4	0.0000	0.0000	
5	0.0000	0.0000	

PLANT- Electronic Chrome and Grinding
DATE- November 22, 1992
LOCATION- Santa Fe Springs, CA
RUN- Outlet 4

INITIAL DATA VALUES

DIA. OF STACK OR CROSS SECTION
0.0000 IN. OR 17.5000 L 23.7500 W IN.

CATCH

FRONT HALF	14.3000 ug.
BACK HALF	0.0000 ug.
TOTAL	14.3000 ug.

BAROMETRIC PRESSURE Pbar	30.18 in. Hg
Ym METER CORRECTION FACTOR	0.9790
STACK STATIC PRESSURE Pst	0.07 in. HOH
NET TIME OF TEST Tt	120 min.
ESTIMATED % MOISTURE	1.0
PITOT COEFFICIENT	0.84
DIA. OF NOZZLE	0.2550 in.
Vw TOTAL H2O COLLECTED	13.90 ml
METER DELTA H@	1.9470 in. HOH
Np # OF POINTS	24

%CO2	%O2	%N2
0.70	21.00	78.30

CALCULATED VALUES

Milligrams/Dry Std. Cubic Meter = 0.0106

Grains/Dry Std. Cubic Ft. = 4.64E-06

Lbs./Hour = 1.265E-04 Kilograms/Hour = 5.739E-05

AFCM	DSCFM
3131.12	3182.80

Vw gas	Vm Std.	STACK GAS PRESSURE Ps
0.6547 CF	47.5841 CF	30.1851 in. HOH

TRUE % M	AVE. DELTA P	MWd MOL WT. OF STACK GAS
1.3572	0.1113 in. HOH	28.9520

Md	AVE. DELTA H	AVE. SQRT DELTA P
0.9900	0.53 in. HOH	7.4290

Bws(est)	AVE. Ts	PER CENT ISOKINETIC %I
0.0100	59 F	101.4518

Vm TOTAL	AVE. Tm	Vs STACK GAS VELOCITY
48.2500 CF	69 F	18.0805 f/s

MW MOL. WT. OF STACK GAS WET= 28.8425

LEAK CHECK

GAS METER READING

	START	STOP	COMENTS
1	0.0000	0.0000	
2	0.0000	0.0000	
3	0.0000	0.0000	
4	0.0000	0.0000	
5	0.0000	0.0000	

PLANT- Electronic Chrome and Grinding
DATE- November 22, 1992
LOCATION- Santa Fe Springs, CA
RUN- Outlet 5

INITIAL DATA VALUES

DIA. OF STACK OR CROSS SECTION
0.0000 IN. OR 17.5000 L 23.7500 W IN.

CATCH

FRONT HALF	11.8000 ug.
BACK HALF	0.0000 ug.
TOTAL	11.8000 ug.

BAROMETRIC PRESSURE Pbar: 30.18 in. Hg
Ym METER CORRECTION FACTOR: 0.9790

STACK STATIC PRESSURE Pst: 0.07 in. HOH
NET TIME OF TEST Tt: 120 min.

ESTIMATED % MOISTURE: 1.0
PITOT COEFFICIENT: 0.84

DIA. OF NOZZLE: 0.2550 in.
Vw TOTAL H2O COLLECTED: 13.20 ml

METER DELTA H@: 1.9470 in. HOH
Np # OF POINTS: 24

%CO2	%O2	%N2
0.70	21.00	78.30

CALCULATED VALUES

Milligrams/Dry Std. Cubic Meter = 0.0082

Grains/Dry Std. Cubic Ft. = 3.58E-06

Lbs./Hour = 1.119E-04 Kilograms/Hour = 5.078E-05

AFCM: 3609.01
DSCFM: 3650.69

Vw gas: 0.6217 CF
Vm Std.: 50.9027 CF
STACK GAS PRESSURE Ps: 30.1851 in. HOH

TRUE % M: 1.2067
AVE. DELTA P: 0.1442 in. HOH
MWd MOL WT. OF STACK GAS: 28.9520

Md: 0.9900
AVE. DELTA H: 0.67 in. HOH
AVE. SQRT DELTA P: 8.5628

Bws(est): 0.0100
AVE. Ts: 61 F
PER CENT ISOKINETIC %I: 94.6178

Vm TOTAL: 53.7000 CF
AVE. Tm: 91 F
Vs STACK GAS VELOCITY: 20.8400 f/s

MW MOL. WT. OF STACK GAS WET= 28.8425

LEAK CHECK

GAS METER READING

	START	STOP	COMENTS
1	0.0000	0.0000	
2	0.0000	0.0000	
3	0.0000	0.0000	
4	0.0000	0.0000	
5	0.0000	0.0000	

PLANT- Electronic Chrome and Grinding
DATE- November 22, 1992
LOCATION- Santa Fe Springs, CA
RUN- Outlet 6

INITIAL DATA VALUES

DIA. OF STACK OR CROSS SECTION
0.0000 IN. OR 17.5000 L 23.7500 W IN.

CATCH

FRONT HALF	8.9700 ug.
BACK HALF	0.0000 ug.
TOTAL	8.9700 ug.

BAROMETRIC PRESSURE Pbar	Ym METER CORRECTION FACTOR
30.18 in. Hg	0.9790
STACK STATIC PRESSURE Pst	NET TIME OF TEST Tt
0.09 in. HOH	120 min.
ESTIMATED % MOISTURE	PITOT COEFFICIENT
1.0	0.84
DIA. OF NOZZLE	Vw TOTAL H2O COLLECTED
0.2550 in.	14.70 ml
METER DELTA H@	Np # OF POINTS
1.9470 in. HOH	24

%CO2	%O2	%N2
0.70	21.00	78.30

CALCULATED VALUES

Milligrams/Dry Std. Cubic Meter = 0.0065

Grains/Dry Std. Cubic Ft. = 2.84E-06

Lbs./Hour = 8.168E-05 Kilograms/Hour = 3.705E-05

AFCM	DSCFM
3393.78	3352.49

Vw gas	Vm Std.	STACK GAS PRESSURE Ps
0.6924 CF	48.7002 CF	30.1866 in. HOH
TRUE % M	AVE. DELTA P	MWd MOL WT. OF STACK GAS
1.4018	0.1288 in. HOH	28.9520
Md	AVE. DELTA H	AVE. SQRT DELTA P
0.9900	0.60 in. HOH	8.0523
Bws(est)	AVE. Ts	PER CENT ISOKINETIC %I
0.0100	74 F	98.5758
Vm TOTAL	AVE. Tm	Vs STACK GAS VELOCITY
50.7170 CF	84 F	19.5972 f/s

MW MOL. WT. OF STACK GAS WET= 28.8425

LEAK CHECK

GAS METER READING

	START	STOP	COMENTS
1	0.0000	0.0000	
2	0.0000	0.0000	
3	0.0000	0.0000	
4	0.0000	0.0000	
5	0.0000	0.0000	

Inlet Run #1

==========
RUN DATA
==========

POINT		TIME	GAS METER READING	VELOCITY DELTA P	ORIFICE PRESSURE ACTUAL	ORIFICE PRESSURE DESIRED	STACK TEMP	DRY GAS METER TEMP. IN	DRY GAS METER TEMP. OUT	%I PER POINT
A	1	0.00	131.145	0.76	3.64	3.26	65	65	62	106.7
	1	5.00	136.400	0.76	3.64	3.27	65	68	64	103.1
	2	10.00	141.500	0.72	3.45	3.11	67	73	65	95.1
	2	15.00	146.100	0.73	3.50	3.15	70	76	67	98.4
	3	20.00	150.900	0.67	3.21	2.90	71	80	69	100.0
	3	25.00	155.600	0.65	3.12	2.83	70	81	71	103.3
	4	30.00	160.400	0.60	2.88	2.61	71	83	72	102.8
	4	35.00	165.000	0.57	2.73	2.48	72	84	74	103.0
	5	40.00	169.500	0.68	3.26	2.97	72	86	76	100.3
	5	45.00	174.300	0.68	3.26	2.97	73	87	77	98.1
	6	50.00	179.000	0.68	3.26	2.96	76	88	79	106.5
	6	55.00	184.100	0.69	3.26	3.02	74	89	80	92.9
B	1	60.00	188.600	0.67	3.21	2.94	72	84	81	98.7
	1	65.00	193.300	0.67	3.21	2.94	73	86	81	109.1
	2	70.00	198.500	0.67	3.21	2.95	73	89	82	98.2
	2	75.00	203.200	0.67	3.21	2.95	74	91	83	98.0
	3	80.00	207.900	0.64	3.04	2.82	74	92	84	100.1
	3	85.00	212.600	0.65	3.12	2.87	73	91	84	99.3
	4	90.00	217.300	0.59	2.83	2.60	75	92	85	99.7
	4	95.00	221.800	0.59	2.83	2.59	77	92	85	104.4
	5	100.00	226.500	0.63	3.02	2.77	76	93	85	96.6
	5	105.00	231.000	0.63	3.02	2.78	76	93	86	98.6
	6	110.00	235.600	0.71	3.40	3.12	79	95	87	99.1
	6	115.00	240.500	0.71	3.40	3.13	79	96	88	100.3
	0	120.00	245.468			0.00				0.0

=========
RUN DATA
=========

POINT		TIME	GAS METER READING	VELOCITY DELTA P	ORIFICE PRESSURE ACTUAL	ORIFICE PRESSURE DESIRED	STACK TEMP	DRY GAS METER TEMP. IN	DRY GAS METER TEMP. OUT	%I PER POINT
A	1	0.00	246.870	0.62	2.97	2.69	76	81	82	103.7
	1	5.00	251.600	0.75	3.60	3.27	75	84	82	87.5
	2	10.00	256.000	0.77	3.69	3.37	75	87	82	101.8
	2	15.00	261.200	0.75	3.60	3.29	75	89	83	100.9
	3	20.00	266.300	0.72	3.45	3.17	73	89	83	100.7
	3	25.00	271.300	0.72	3.45	3.16	74	89	83	100.8
	4	30.00	276.300	0.68	3.26	2.99	75	90	84	99.5
	4	35.00	281.100	0.68	3.26	2.99	76	91	84	101.6
	5	40.00	286.000	0.67	3.21	2.94	77	91	85	100.2
	5	45.00	290.800	0.65	3.12	2.84	80	93	86	99.6
	6	50.00	295.500	0.62	2.97	2.71	81	94	86	99.8
	6	55.00	300.100	0.60	2.88	2.63	77	92	85	101.3
B	1	60.00	304.700	0.72	3.45	3.15	76	86	85	97.1
	1	65.00	309.500	0.72	3.45	3.17	73	88	84	96.7
	2	70.00	314.300	0.70	3.36	3.07	76	90	85	100.1
	2	75.00	319.200	0.70	3.36	3.08	75	92	85	97.8
	3	80.00	324.000	0.70	3.36	3.08	74	90	84	100.0
	3	85.00	328.900	0.67	3.21	2.95	75	91	85	100.0
	4	90.00	333.700	0.65	3.12	2.86	74	91	84	99.4
	4	95.00	338.400	0.65	3.12	2.87	74	91	85	99.3
	5	100.00	343.100	0.70	3.36	3.08	76	91	85	98.0
	5	105.00	347.900	0.72	3.45	3.18	73	91	85	96.4
	6	110.00	352.700	0.92	4.41	4.06	73	90	84	96.3
	6	115.00	358.100	0.92	4.41	4.06	73	90	84	95.2
	0	120.00	363.440			0.00				0.0

Inlet Run #3

==========
RUN DATA
==========

POINT #		TIME	GAS METER READING	VELOCITY DELTA P	ORIFICE PRESSURE ACTUAL	ORIFICE PRESSURE DESIRED	STACK TEMP	DRY GAS METER TEMP. IN	DRY GAS METER TEMP. OUT	%I PER POINT
A	1	0.00	368.281	0.75	3.60	3.21	78	76	77	119.5
	1	5.00	374.200	0.77	3.69	3.32	79	82	78	89.2
	2	10.00	378.700	0.74	3.55	3.19	80	85	78	84.7
	2	15.00	382.900	0.74	3.55	3.20	80	86	79	102.7
	3	20.00	388.000	0.73	3.50	3.16	78	86	79	95.1
	3	25.00	392.700	0.73	3.50	3.15	80	86	79	101.4
	4	30.00	397.700	0.70	3.36	3.05	76	86	80	96.8
	4	35.00	402.400	0.70	3.36	3.03	79	85	79	93.1
	5	40.00	406.900	0.73	3.50	3.16	79	85	80	97.2
	5	45.00	411.700	0.65	3.12	2.81	78	84	79	96.6
	6	50.00	416.200	0.62	2.97	2.68	78	84	79	101.1
	6	55.00	420.800	0.60	2.88	2.60	77	84	79	98.2
B	1	60.00	425.200	0.68	3.26	2.94	75	79	78	92.6
	1	65.00	429.600	0.65	3.12	2.82	75	81	78	101.0
	2	70.00	434.300	0.68	3.26	2.94	76	82	77	98.9
	2	75.00	439.000	0.68	3.26	2.95	75	83	77	96.6
	3	80.00	443.600	0.67	3.21	2.90	78	84	78	99.5
	3	85.00	448.300	0.67	3.21	2.90	77	84	78	99.4
	4	90.00	453.000	0.65	3.12	2.82	77	85	78	96.5
	4	95.00	457.500	0.65	3.12	2.82	75	83	78	98.6
	5	100.00	462.100	0.62	2.97	2.71	71	82	77	98.6
	5	105.00	466.600	0.62	2.97	2.71	70	81	76	96.5
	6	110.00	471.000	0.68	3.26	2.97	69	80	75	96.5
	6	115.00	475.600	0.68	3.26	2.98	67	80	75	100.0
		120.00	480.379			0.00				0.0

==========
RUN DATA
==========

POINT		TIME	GAS METER READING	VELOCITY DELTA P	ORIFICE PRESSURE ACTUAL	ORIFICE PRESSURE DESIRED	STACK TEMP	DRY GAS METER TEMP. IN	DRY GAS METER TEMP. OUT	%I PER POINT
A	1	0.00	480.700	0.79	3.79	3.39	53	53	52	98.6
	1	5.00	485.600	0.79	3.79	3.40	53	56	52	98.3
	2	10.00	490.500	0.77	3.69	3.33	55	62	53	99.1
	2	15.00	495.400	0.79	3.79	3.42	57	66	56	95.4
	3	20.00	500.200	0.75	3.60	3.26	58	70	58	97.4
	3	25.00	505.000	0.70	3.36	3.06	58	72	60	98.3
	4	30.00	509.700	0.70	3.36	3.06	59	74	62	95.9
	4	35.00	514.300	0.66	3.16	2.89	61	77	64	98.4
	5	40.00	518.900	0.66	3.16	2.89	62	78	66	96.1
	5	45.00	523.400	0.70	3.36	3.08	62	80	68	88.9
	6	50.00	527.700	0.70	3.36	3.08	63	81	69	105.3
	6	55.00	532.800	0.72	3.45	3.17	64	82	71	93.6
B	1	60.00	537.403	0.75	3.60	3.28	66	77	73	98.1
	1	65.00	542.300	0.75	3.60	3.29	67	81	74	93.8
	2	70.00	547.000	0.76	3.64	3.33	69	84	75	100.9
	2	75.00	552.100	0.76	3.68	3.33	71	87	77	92.7
	3	80.00	556.800	0.74	3.55	3.24	73	89	78	97.9
	3	85.00	561.700	0.76	3.68	3.33	74	90	80	98.4
	4	90.00	566.700	0.72	3.45	3.16	74	91	81	96.8
	4	95.00	571.500	0.74	3.55	3.25	76	92	82	95.5
	5	100.00	576.300	0.70	3.36	3.07	77	93	83	98.1
	5	105.00	581.100	0.70	3.36	3.08	75	93	84	97.8
	6	110.00	585.900	0.68	3.26	3.00	75	93	85	97.1
	6	115.00	590.600	0.76	3.64	3.36	75	93	86	95.7
		120.00	595.501			0.00				0.0

Inlet Run #5

=========
RUN DATA
=========

POINT #		TIME	GAS METER READING	VELOCITY DELTA P	ORIFICE PRESSURE ACTUAL	ORIFICE PRESSURE DESIRED	STACK TEMP	DRY GAS METER TEMP. IN	DRY GAS METER TEMP. OUT	%I PER POINT
A	1	0.00	595.638	0.78	3.74	3.41	75	83	84	97.6
	1	5.00	600.645	0.78	3.74	3.39	78	85	84	131.8
	2	10.00	607.400	0.78	3.74	3.40	80	90	85	103.1
	2	15.00	612.700	0.78	3.74	3.54	60	94	86	110.2
	3	20.00	618.500	0.71	3.40	3.24	61	97	89	81.2
	3	25.00	622.600	0.71	3.40	3.24	62	98	89	97.0
	4	30.00	627.500	0.70	3.36	3.20	61	99	90	95.5
	4	35.00	632.300	0.66	3.16	3.02	62	100	91	98.2
	5	40.00	637.100	0.60	2.88	2.75	62	100	92	98.5
	5	45.00	641.700	0.62	2.97	2.84	62	100	92	97.0
	6	50.00	646.300	0.66	3.16	3.03	61	101	93	93.8
	6	55.00	650.900	0.65	3.12	2.99	61	102	94	94.3
B	1	60.00	655.501	0.72	3.45	3.29	62	96	94	94.1
	1	65.00	660.300	0.70	3.36	3.19	62	96	92	95.6
	2	70.00	665.100	0.72	3.45	3.29	61	97	92	96.1
	2	75.00	670.000	0.72	3.45	3.29	63	98	93	94.2
	3	80.00	674.800	0.68	3.26	3.12	61	100	94	96.4
	3	85.00	679.600	0.68	3.26	3.12	62	101	94	96.4
	4	90.00	684.400	0.66	3.16	3.03	62	101	94	95.8
	4	95.00	689.100	0.66	3.16	3.02	63	99	93	96.2
	5	100.00	693.800	0.70	3.36	3.20	63	98	93	95.5
	5	105.00	698.600	0.65	3.12	2.96	63	97	92	97.1
	6	110.00	703.300	0.72	3.45	3.28	63	97	93	94.3
	6	115.00	708.100	0.70	3.36	3.18	63	95	92	95.8
	0	120.00	712.901			0.00				0.0

Inlet Run #6

==========
RUN DATA
==========

POINT		TIME	GAS METER READING	VELOCITY DELTA P	ORIFICE PRESSURE ACTUAL	ORIFICE PRESSURE DESIRED	STACK TEMP	DRY GAS METER TEMP. IN	DRY GAS METER TEMP. OUT	%I PER POINT
A	1	0.00	714.920	0.76	3.65	3.29	79	82	84	112.7
	1	5.00	720.600	0.76	3.65	3.30	79	87	83	85.0
	2	10.00	724.900	0.66	3.16	2.89	77	90	84	96.9
	2	15.00	729.500	0.69	3.31	3.01	78	90	84	97.0
	3	20.00	734.200	0.67	3.21	2.93	78	89	84	96.4
	3	25.00	738.800	0.67	3.21	2.92	79	90	84	98.5
	4	30.00	743.500	0.56	2.68	2.46	76	90	84	98.2
	4	35.00	747.800	0.62	2.97	2.72	76	89	84	97.8
	5	40.00	752.300	0.60	2.88	2.63	77	90	84	97.2
	5	45.00	756.700	0.56	2.68	2.45	77	90	85	98.2
	6	50.00	761.000	0.60	2.88	2.65	72	89	84	94.6
	6	55.00	765.300	0.51	2.44	2.25	72	89	84	100.3
B	1	60.00	769.505	0.66	3.16	2.90	69	80	82	103.5
	1	65.00	774.400	0.66	3.16	2.89	72	84	82	90.9
	2	70.00	778.700	0.64	3.07	2.83	68	86	82	96.0
	2	75.00	783.200	0.64	3.07	2.82	70	86	82	98.3
	3	80.00	787.800	0.64	3.07	2.82	71	88	82	98.2
	3	85.00	792.400	0.64	3.07	2.82	70	87	82	98.2
	4	90.00	797.000	0.60	2.88	2.66	66	86	81	96.8
	4	95.00	801.400	0.60	2.88	2.66	66	85	81	99.1
	5	100.00	805.900	0.60	2.88	2.66	65	85	80	94.7
	5	105.00	810.200	0.60	2.88	2.66	65	85	80	96.9
	6	110.00	814.600	0.58	2.78	2.54	72	84	80	99.3
	6	115.00	819.000	0.60	2.88	2.63	70	82	79	95.6
	0	120.00	823.305			0.00				0.0

Outlet Run #1

****
RUN DATA
****

POINT		TIME	GAS METER READING	VELOCITY DELTA P	ORIFICE PRESSURE ACTUAL	ORIFICE PRESSURE DESIRED	STACK TEMP	DRY GAS METER TEMP. IN	DRY GAS METER TEMP. OUT	XI PER POINT
A	1	0.00	215.770	0.13	0.65	0.63	63	64	62	136.0
	2	5.00	218.700	0.09	0.45	0.44	62	66	63	111.1
	3	10.00	220.700	0.07	0.35	0.34	63	68	64	106.8
	4	15.00	222.400	0.06	0.30	0.29	62	71	66	108.0
	5	20.00	224.000	0.06	0.30	0.29	63	72	67	101.1
	6	25.00	225.500	0.08	0.40	0.39	63	74	69	104.7
B	1	30.00	227.300	0.10	0.50	0.49	63	75	72	119.3
	2	35.00	229.600	0.09	0.45	0.44	63	77	72	103.6
	3	40.00	231.500	0.08	0.40	0.39	64	78	73	104.0
	4	45.00	233.300	0.08	0.40	0.40	64	80	75	109.4
	5	50.00	235.200	0.07	0.35	0.35	64	81	76	98.3
	6	55.00	236.800	0.07	0.35	0.35	64	81	77	104.3
C	1	60.00	238.500	0.25	1.25	1.24	63	82	77	58.5
	2	65.00	240.300	0.18	0.90	0.89	70	86	80	172.2
	3	70.00	244.800	0.16	0.80	0.79	73	86	80	101.7
	4	75.00	247.300	0.15	0.75	0.74	73	88	81	100.6
	5	80.00	249.700	0.10	0.50	0.49	71	88	82	117.6
	6	85.00	252.000	0.08	0.40	0.39	72	88	82	120.2
D	1	90.00	254.100	0.20	1.00	0.98	75	87	83	101.8
	2	95.00	256.900	0.19	0.95	0.94	73	89	83	96.6
	3	100.00	259.500	0.15	0.75	0.74	74	91	85	108.3
	4	105.00	262.100	0.16	0.80	0.79	75	91	85	92.9
	5	110.00	264.400	0.09	0.45	0.44	75	91	85	134.5
	6	115.00	266.900	0.07	0.35	0.35	75	91	86	150.2
		120.00	269.365			0.00				0.0

Outlet Run #2

****
RUN DATA
****

POINT		TIME	GAS METER READING	VELOCITY DELTA P	ORIFICE PRESSURE ACTUAL	ORIFICE PRESSURE DESIRED	STACK TEMP	DRY GAS METER TEMP. IN	DRY GAS METER TEMP. OUT	%I PER POINT
A	1	0.00	269.618	0.27	1.35	1.32	74	81	82	100.2
	2	5.00	272.800	0.25	1.25	1.22	74	83	81	104.6
	3	10.00	276.000	0.20	1.00	0.98	75	85	81	94.8
	4	15.00	278.600	0.15	0.75	0.73	76	86	82	58.9
	5	20.00	280.000	0.14	0.65	0.69	74	87	82	130.2
	6	25.00	283.000	0.12	0.56	0.59	72	88	82	102.8
B	1	30.00	285.200	0.23	1.08	1.13	73	84	83	101.8
	2	35.00	288.200	0.20	0.94	0.99	72	87	83	87.0
	3	40.00	290.600	0.19	0.89	0.94	73	88	83	92.9
	4	45.00	293.100	0.16	0.75	0.79	75	88	83	93.3
	5	50.00	295.400	0.15	0.70	0.74	76	89	84	96.3
	6	55.00	297.700	0.14	0.66	0.69	73	88	84	95.1
C	1	60.00	299.900	0.16	0.75	0.79	73	84	83	97.5
	2	65.00	302.300	0.10	0.47	0.49	74	83	85	102.8
	3	70.00	304.300	0.11	0.51	0.54	76	87	84	97.9
	4	75.00	306.300	0.13	0.61	0.64	75	87	84	99.0
	5	80.00	308.500	0.12	0.56	0.59	71	87	84	88.6
	6	85.00	310.400	0.10	0.47	0.49	74	87	84	97.4
D	1	90.00	312.300	0.18	0.84	0.89	73	85	83	103.4
	2	95.00	315.000	0.15	0.70	0.74	75	87	83	88.1
	3	100.00	317.100	0.14	0.65	0.69	72	87	83	82.2
	4	105.00	319.000	0.13	0.61	0.64	70	87	83	112.1
	5	110.00	321.500	0.12	0.56	0.59	74	87	83	98.3
	6	115.00	323.600	0.10	0.47	0.49	72	87	83	91.5
		120.00	325.388			0.00				0.0

Outlet Run #3

==========
RUN DATA
==========

POINT		TIME	GAS METER READING	VELOCITY DELTA P	ORIFICE PRESSURE ACTUAL	ORIFICE PRESSURE DESIRED	STACK TEMP	DRY GAS METER TEMP. IN	DRY GAS METER TEMP. OUT	%I PER POINT
A	1	0.00	326.235	0.20	0.94	0.86	76	77	78	107.0
	1	5.00	329.000	0.16	0.75	0.70	73	81	78	98.8
	2	10.00	331.300	0.14	0.67	0.61	73	82	79	100.9
	2	15.00	333.500	0.12	0.56	0.53	71	83	79	98.7
	3	20.00	335.500	0.13	0.61	0.57	69	82	79	94.8
	3	25.00	337.500	0.08	0.38	0.35	69	82	79	108.7
	4	30.00	339.300	0.14	0.67	0.61	69	80	79	105.3
	4	35.00	341.600	0.10	0.47	0.44	68	80	78	113.7
	5	40.00	343.700	0.11	0.51	0.48	67	80	78	92.8
	5	45.00	345.500	0.11	0.51	0.48	68	80	78	77.4
	6	50.00	347.000	0.09	0.42	0.40	67	80	78	125.4
	6	55.00	349.200	0.24	1.13	1.05	67	78	77	84.1
B	1	60.00	351.600	0.21	0.99	0.92	67	80	77	104.7
	1	65.00	354.400	0.19	0.89	0.84	67	81	77	98.2
	2	70.00	356.900	0.14	0.67	0.62	67	81	77	118.9
	2	75.00	359.500	0.12	0.56	0.53	67	80	77	84.0
	3	80.00	361.200	0.12	0.56	0.53	68	80	77	94.0
	3	85.00	363.100	0.12	0.56	0.53	66	80	77	103.7
	4	90.00	365.200	0.25	1.26	1.11	62	79	77	95.7
	4	95.00	368.000	0.27	1.26	1.19	65	79	76	89.1
	5	100.00	370.700	0.22	1.00	0.97	65	79	76	95.0
	5	105.00	373.300	0.14	0.65	0.62	64	79	75	100.7
	6	110.00	375.500	0.12	0.56	0.53	64	77	75	108.9
	6	115.00	377.700	0.12	0.56	0.53	63	76	74	94.1
	0	120.00	379.600			0.00				0.0

Outlet Run #4

==========
RUN DATA
==========

POINT #		TIME	GAS METER READING	VELOCITY DELTA P	ORIFICE PRESSURE ACTUAL	ORIFICE PRESSURE DESIRED	STACK TEMP	DRY GAS METER TEMP. IN	DRY GAS METER TEMP. OUT	%I PER POINT
A	1	0.00	379.955	0.19	0.89	0.84	53	51	50	87.0
	1	5.00	382.100	0.18	0.84	0.79	59	55	51	116.7
	2	10.00	384.900	0.15	0.71	0.66	59	58	52	86.4
	2	15.00	386.800	0.08	0.38	0.36	59	61	54	148.6
	3	20.00	389.200	0.05	0.29	0.21	89	62	55	136.7
	3	25.00	390.900	0.07	0.33	0.31	58	63	57	92.1
	4	30.00	392.300	0.20	0.94	0.90	57	62	59	105.1
	4	35.00	395.000	0.18	0.84	0.81	56	68	61	97.6
	5	40.00	397.400	0.14	0.65	0.63	57	70	63	101.1
	5	45.00	399.600	0.07	0.33	0.32	57	72	64	123.0
	6	50.00	401.500	0.07	0.33	0.32	57	72	65	103.5
	6	55.00	403.100	0.06	0.28	0.27	57	72	66	111.7
B	1	60.00	404.700	0.16	0.75	0.73	57	73	68	119.5
	1	65.00	407.500	0.08	0.38	0.37	57	76	70	114.0
	2	70.00	409.400	0.07	0.33	0.32	57	78	71	108.7
	2	75.00	411.100	0.09	0.42	0.41	57	79	72	101.4
	3	80.00	412.900	0.07	0.33	0.32	57	80	74	108.2
	3	85.00	414.600	0.06	0.28	0.28	57	81	75	116.7
	4	90.00	416.300	0.18	0.85	0.83	58	80	76	103.3
	4	95.00	418.900	0.11	0.52	0.51	58	84	77	101.1
	5	100.00	420.900	0.11	0.52	0.51	58	84	78	95.9
	5	105.00	422.800	0.10	0.47	0.46	59	84	79	79.4
	6	110.00	424.300	0.10	0.47	0.46	59	84	80	111.1
	6	115.00	426.400	0.10	0.47	0.46	59	84	80	95.5
	0	120.00	428.205			0.00				0.0

Outlet Run #5

==========
RUN DATA
==========

POINT		TIME	GAS METER READING	VELOCITY DELTA P	ORIFICE PRESSURE ACTUAL	ORIFICE PRESSURE DESIRED	STACK TEMP	DRY GAS METER TEMP. IN	DRY GAS METER TEMP. OUT	XI PER POINT
A	1	0.00	428.300	0.17	0.80	0.79	60	82	82	97.5
	1	5.00	430.700	0.10	0.47	0.46	60	84	82	126.8
	2	10.00	433.100	0.11	0.52	0.51	61	85	83	105.7
	2	15.00	435.200	0.11	0.52	0.51	60	86	83	115.6
	3	20.00	437.500	0.11	0.52	0.51	60	88	84	70.2
	3	25.00	438.900	0.11	0.52	0.52	60	89	85	110.1
	4	30.00	441.100	0.15	0.70	0.70	61	90	86	64.2
	4	35.00	442.600	0.12	0.56	0.56	61	91	87	100.3
	5	40.00	444.700	0.11	0.47	0.52	62	93	88	94.6
	5	45.00	446.600	0.13	0.61	0.61	62	93	89	91.6
	6	50.00	448.600	0.13	0.61	0.61	62	94	89	109.8
	6	55.00	451.000	0.12	0.56	0.57	61	94	90	90.3
B	1	60.00	452.900	0.24	1.12	1.13	61	94	91	94.1
	1	65.00	455.700	0.22	1.03	1.04	61	96	92	105.0
	2	70.00	458.700	0.21	0.96	0.99	62	97	92	96.7
	2	75.00	461.400	0.15	0.70	0.71	62	96	92	101.8
	3	80.00	463.800	0.12	0.56	0.57	62	94	92	87.8
	3	85.00	465.650	0.06	0.28	0.28	62	94	92	117.4
	4	90.00	467.400	0.19	0.89	0.90	61	93	93	98.1
	4	95.00	470.000	0.23	1.10	1.09	61	98	94	95.5
	5	100.00	472.800	0.19	0.89	0.90	61	99	94	7.5
	5	105.00	473.000	0.15	0.71	0.71	63	98	95	169.0
	6	110.00	477.000	0.11	0.52	0.52	63	97	95	143.1
	6	115.00	479.900	0.12	0.56	0.57	63	96	95	99.3
	0	120.00	482.000			0.00				0.0

Outlet Run #6

==========
RUN DATA
==========

POINT		TIME	GAS METER READING	VELOCITY DELTA P	ORIFICE PRESSURE ACTUAL	ORIFICE PRESSURE DESIRED	STACK TEMP	DRY GAS METER TEMP. IN	DRY GAS METER TEMP. OUT	%I PER POINT
A	1	0.00	483.108	0.25	1.18	1.12	80	84	85	101.8
	1	5.00	486.100	0.25	1.18	1.13	77	85	85	98.3
	2	10.00	489.000	0.19	0.89	0.86	79	90	88	104.3
	2	15.00	491.700	0.13	0.61	0.59	79	92	87	98.0
	3	20.00	493.800	0.11	0.51	0.50	80	87	85	0.0
	3	25.00	446.000	0.09	0.42	0.41	76	86	85	2910.2
	4	30.00	497.700	0.19	0.89	0.85	78	83	84	97.5
	4	35.00	500.200	0.12	0.56	0.54	78	85	83	107.8
	5	40.00	502.400	0.10	0.47	0.45	79	86	84	117.9
	5	45.00	504.600	0.03	0.14	0.14	77	85	84	166.1
	6	50.00	506.300	0.03	0.14	0.14	75	85	84	165.8
	6	55.00	508.000	0.03	0.14	0.14	75	85	84	146.3
B	1	60.00	509.500	0.10	0.47	0.45	71	82	83	96.2
	1	65.00	511.300	0.19	0.89	0.87	68	82	82	65.9
	2	70.00	513.000	0.11	0.51	0.50	69	83	82	96.7
	2	75.00	514.900	0.12	0.56	0.55	71	83	82	97.6
	3	80.00	516.900	0.13	0.61	0.59	68	83	82	98.2
	3	85.00	519.000	0.12	0.56	0.55	71	84	82	97.5
	4	90.00	521.000	0.14	0.65	0.64	71	83	82	108.5
	4	95.00	523.400	0.19	0.89	0.86	71	84	81	97.0
	5	100.00	525.900	0.12	0.56	0.55	71	84	81	102.5
	5	105.00	528.000	0.11	0.51	0.50	70	82	80	102.1
	6	110.00	530.000	0.13	0.61	0.59	70	82	80	89.3
	6	115.00	531.900	0.11	0.51	0.50	69	82	80	98.2
	0	120.00	533.825			0.00				0.0

APPENDIX "B"

FIELD DATA SHEETS

VELOCITY FIELD DATA SHEET

Client: EPA/Electronic

Source: Inlet to Scrubber

Operators: Yarock/Turner

Test Date: 2/17/92 Run #: 1

Time: 2:00

Barometric Press.: 30.18

Wet Bulb: N/A Dry Bulb: 56 Moisture: 1%

Pitot Tube #: 3ft #1 Cp: 0.84 Stack Area:

Upstr. Disturbance ≈10ft Dwnstr. Disturbance ≈2ft

Stack Dimensions 14 inch Diameter Stack Height N/A

TRAV. PT. #	% DIAM	PT LOC	+ PORT	Δ P In H_2O	TEMP	STACK PRESS	⊖ NULL
A1		.61	A side	.21			0
2		2.0		.20			0
3		4.14		.22			0
4		9.86		.28			0
5		11.95		.31			0
6		13.38		.27			0
B1		.61	B top	.25			0
2		2.0		.33			0
3		4.14		.30			0
4		9.86		.26			0
5		11.95		.38			0
6		13.38		.30			0

COMMENTS: Avg = 0.275

VELOCITY FIELD DATA SHEET

Client: EPA / Electronic Control Source: Outlet

Operators: Yarach / Tuesday Test Date: 2/17/92 Run #: 1

Time: 2:15pm Barometric Press.: 30.18

Wet Bulb: ~~N/A~~ N/A Dry Bulb: 56 Moisture: 1%

Pitot Tube #: 3F1 Cp: 0.84 Stack Area:

Upstr. Disturbance Dwnstr. Disturbance 1 dia

Stack Dimensions 17½" x 23.75 Stack Height NA

TRAV. PT. #	% DIAM	PT LOC	+ PORT	Δ P In H_2O	TEMP	STACK PRESS	⊖ NULL
C1		1.3	C	~~.16~~ .16	56°		+
2		4.3		.24			0
3		7.25		.24			0
4		10		.25			-
5		13		.26			-
6		16		.33			0
D1		1.3	D	.15			+
2		4.3		.25			0
3		7.25		.30			0
4		10		.32			0
5		13		.35			0
6		16		.36			0

COMMENTS:

VELOCITY FIELD DATA SHEET

Client: EPA/Electronic

Source: Outlet of Scrubber

Operators: Yarch/Tuller

Test Date: 2/17/92 Run #: 1

Time: 2:15 pm

Barometric Press.: 30.18

Wet Bulb: _____ Dry Bulb: 56 Moisture: 1%

Pitot Tube #: 3ft #1 Cp: 0.84 Stack Area: _____

Upstr. Disturbance _____ Dwnstr. Disturbance _____

Stack Dimensions 17.5 × 23.75 Stack Height N/A

TRAV. PT. #	% DIAM	PT LOC	+ PORT	Δ P In H_2O	TEMP	STACK PRESS	⊖ NULL
1		1.3 in	A	.12	56°		0
2		4.3		.16			0
3		7.25		.16			-
4		10		.17			0
5		13		.19			0
6		16		.30			0
~~7~~ B1		1.3	B	.12			0
~~8~~ 2		4.3		.19			0
~~9~~ 3		7.25		.21			0
~~10~~ 4		10		.21			-0
~~11~~ 5		13		.19			-0
~~12~~ 6		16		.26			0
				Ave 0.229 ΔP			

COMMENTS: _____

PARTICULATE FIELD DATA

Client: USEPA-ELECTRIC-GRINDING Source: INLET

Operators: JAMES L. PARKER Test Date: 2-18-92 Run #: 1

Time: 9:05-11:20 Test Method: 13B

K=4.8

PT NO		CLOCK TIME	DGM READING $V_m(ft^3)$	ΔP (in.) H_2O	ΔH (in.) H_2O	HOT BOX TEMP (°F)	#4 IMP TEMP (°F)	#5 STACK TEMP (°F)	DGM TEMP IN (°F)	DGM TEMP OUT (°F)	SAMPLE TRAIN
1	0	9:05	131.145	.76	3.64	—	48	65	65	62	6
1	5		136.4	.76	3.64	—	47	65	68	64	6
2	10		141.5	.72	3.45	—	55	67	73	65	6
2	15		146.1	.73	3.50	—	58	70	76	67	6
3	20		150.9	.67	3.21	—	62	71	80	69	5
3	25		155.6	.65	3.12	—	62	70	81	71	5
4	30		160.4	.60	2.88	—	60	71	83	72	5
4	35		165.0	.57	2.73	—	58	72	84	74	4.5
5	40		169.5	.68	3.26	—	58	72	86	76	5
5	45		174.3	.68	3.26	—	58	73	87	77	5
6	50		179.0	.68	3.26	—	61	76	88	78	5.3
6	55		184.1	.69	3.26	—	57	74	87	80	5.5
1	0		188.6	.67	3.21	—	57	72	84	81	5
1	5		193.3	.67	3.21	—	60	73	86	81	5
2	10		198.5	.67	3.21	—	66	73	87	82	5
2	15		203.2	.67	3.21	—	64	74	91	83	5
3	20		207.9	.64	3.04	—	64	74	92	84	5
3	25		212.6	.65	3.12	—	66	73	91	84	5
4	30		217.3	.59	2.83	—	66	75	92	85	4.5
4	35		221.8	.59	2.83	—	66	77	92	85	4.5

PARTICULATE FIELD DATA

Client: USEPA - Electric Grinding Source: INLET

Operators: JAMES L. PARKER Test Date: 2-18-92 Run #: 1

Time: 9:05 - 11:20 Test Method: 13B

K = 4.8

PT NO		CLOCK TIME	DGM READING $V_m(ft^3)$	ΔP (in.) H_2O	ΔH (in.) H_2O	HOT BOX TEMP (^0F)	IMP TEMP (^0F)	STACK TEMP (^0F)	DGM TEMP IN (^0F)	DGM TEMP OUT (^0F)	SAMPLE TRAIN
5	40		226.5	.63	3.02	—	68	76	93	85	5
5	45		231.0	.63	3.02	—	65	76	93	86	5
6	50		235.6	.71	3.40	—	65	79	95	87	5.3
6	55		240.5	.71	3.40	—	64	79	96	88	5.3
	60	11:20	245.468								
				$\sqrt{\Delta P}$							
•			114.323	0.816	3.204			533		842	

PARTICULATE FIELD DATA

Client: USEPA-ELECTRIC-GRIDING Source: INLET

Time: 12:26 — 2:32 Run #: II Baro. Press.: 30.18

Test Method: 13B Number of Points/ports: 12/2

Sample Time per Point: 10 MIN Net Total Sample Time: 120 MIN.

Stack Dimensions 14" Stack Ht. — Stack Press -2.1

Upstr. Dist. 8.20 Dwnstr. Dist. 2D Assumed Moisture: 1%

Console #: AST#2 Orifice #: 1.890 Meter Corr.: 0.985

EPA Box #: AST#2-BLACK Probe #: 3Ft. #1 Cp: 0.84

Nozzle #: 0.250 #1 Pre test size: SEE RUN #2

K factor: 4.8 Post test size: " " " "

Filter #: — Silica #: INLET RUN #2

LEAK CHECKS

	Pre test		Post test	
Sample Train	0.005 CFM @	10 In. Hg	0.02 CFM @	15 In. Hg
Pitot Press.	✓ In. for 15 sec.		✓ In. for 15 sec.	
Static Press.	✓ In. for 15 sec.		✓ In. for 15 sec.	
Method 3	— In. for 15 sec.		— In. for 15 sec.	

MOISTURE

Inpinger (ml) 210 Gross 200ml Tare 10 Net 36.70g Total

Silica Gel (g) 226.70g Gross 200g Tare 26.70g Net

GAS COMPOSITION

Sample type NA

Analysis type NA

	Pass 1	Pass 2	Pass 3	Average
$\%CO_2$				
$\%O_2$				

Notes:

PARTICULATE FIELD DATA

Client: USEPA - Electric Grinding Source: Inlet

Operators: James L. Parker Test Date: 2-18-92 Run #: 2

Time: 12:26 — 2:32 Test Method: 13B

Kfactor 4.8

PT NO		CLOCK TIME	DGM READING $V_m(ft^3)$	ΔP (in.) H_2O	ΔH (in.) H_2O	HOT BOX TEMP (°F)	IMP TEMP (°F)	STACK TEMP (°F)	DGM TEMP IN (°F)	DGM TEMP OUT (°F)	SAMPLE TRAIN
1	0	12:26	246.870	~~.75~~ .62	~~3.60~~ 2.97	—	66	76	81	82	9
1	5		251.6	.75	3.60	—	63	75	81	82	9
2	10		256.0	.77	3.69	—	64	75	82	82	12
2	15		261.2	.75	3.6	—	66	75	89	83	12
3	20		266.3	.72	3.45	—	66	73	89	83	11
3	25		271.3	.72	3.45	—	66	74	89	83	11
4	30		276.3	.68	3.26	—	65	75	90	84	10
4	35		281.1	.68	3.26	—	66	76	91	84	10
5	40		286.0	.67	3.21	—	66	77	91	85	10
5	45		290.8	.65	3.12	—	66	80	93	86	10
6	50		295.5	.62	2.97	—	66	81	94	86	9
6	55		300.1	.60	2.88	—	66	77	92	85	9
1	0		304.7	.72	3.45	—	66	76	86	85	10
1	5		309.5	.72	3.45	—	65	73	88	84	10
2	10		314.3	.70	3.36	—	65	76	90	85	10
2	15		319.2	.70	3.36	—	65	75	92	85	10
3	20		324.0	.70	3.36	—	64	74	90	84	10
3	25		328.9	.67	3.21	—	64	75	91	85	10
4	30		333.7	.65	3.12	—	64	74	91	84	10
4	35		338.4	.65	3.12	—	64	74	91	85	10

PARTICULATE FIELD DATA

Client: USEPA-Electric Grinding Source: Inlet

Operators: James L. Packer Test Date: 2-18-92 Run #: 2

Time: 12:26 — 2:32 Test Method: 13-B

K Factor 4.8

PT NO		CLOCK TIME	DGM READING $V_m(ft^3)$	ΔP (in.) H_2O	ΔH (in.) H_2O	HOT BOX TEMP (^0F)	IMP TEMP (^0F)	STACK TEMP (^0F)	DGM TEMP IN (^0F)	DGM TEMP OUT (^0F)	SAMPLE TRAIN
5	40		343.1	.70	3.36	—	66	76	91	85	10
5	45		347.9	.72	3.45	—	65	73	91	85	10
6	50		352.7	.92	4.41	—	66	73	90	84	14
6	55		358.1	.92	4.41	—	66	73	90	84	14
		2:32	363.440								

PARTICULATE FIELD DATA

Client: USEPA-Electric-Grinding Source: INLET

Time: 3:16 — 5:21 Run #: #3 Baro. Press.: 30.18

Test Method: 13B Number of Points/ports: 12/2

Sample Time per Point: 10 MIN Net Total Sample Time: 120 MIN.

Stack Dimensions 14" Stack Ht. ——— Stack Press -2.1

Upstr. Dist. 8.2D Dwnstr. Dist. 2D Assumed Moisture: 1%

Console #: AST#2 Orifice H: 1.890 Meter Corr.: 0.985

EPA Box #: AST#2-Black Probe #: 3ft. #1 Cp: 0.84

Nozzle #: 0.250 #1 Pre test size: SEE RUN #1

K factor: 4.8 Post test size: " " " "

Filter #: ——— Silica #: INLET RUN #3

LEAK CHECKS

	Pre test	Post test
Sample Train	12' CFM @ 0.000 In. Hg	0.000 CFM @ 5.0 In. Hg
Pitot Press.	✓ In. for 15 sec.	✓ In. for 15 sec.
Static Press.	✓ In. for 15 sec.	✓ In. for 15 sec.
Method 3	— In. for 15 sec.	— In. for 15 sec.

MOISTURE

Inpinger (ml) 205ml Gross 200ml Tare 5 Net

Silica Gel (g) 225.80g Gross 200g Tare 25.80g Net 30.80g Total

GAS COMPOSITION

Sample type NA

Analysis type NA

	Pass 1	Pass 2	Pass 3	Average
$\%CO_2$				
$\%O_2$				

Notes:

PARTICULATE FIELD DATA

Client: USEPA-ELECTREC Source: INLET

Operators: JAMES L. PARKER Test Date: 2-18-92 Run #: 3

Time: 3:16 — 5:21 Test Method: 13B

K=4.8

PT NO		CLOCK TIME	DGM READING $V_m(ft^3)$	ΔP (in.) H_2O	ΔH (in.) H_2O	HOT BOX TEMP (°F)	IMP TEMP (°F)	STACK TEMP (°F)	DGM TEMP IN (°F)	DGM TEMP OUT (°F)	SAMPLE TRAIN
1	0	3:16	368.281	.75	3.60	—	66	78	76	77	4
1	5		374.2	.77	3.69	—	66	79	82	78	4
2	10		378.7	.74	3.55	—	65	80	85	78	4
2	15		382.9	.74	3.55	—	66	80	86	79	4
3	20		388.0	.73	3.50	—	65	78	86	79	4
3	25		392.7	.73	3.50	—	67	80	86	79	4
4	30		397.1	.70	3.36	—	66	76	86	80	3
4	35		402.4	.70	.336	—	67	79	85	79	3
5	40		406.9	.73	3.50	—	66	79	85	80	3
5	45		411.7	.65	.312	—	67	78	84	79	3
6	50		416.2	.62	2.97	—	65	78	84	79	3
6	55		420.8	.60	2.88	—	66	77	84	79	3
1	0		425.2	.68	3.26	—	66	75	79	78	4
1	5		429.6	.65	3.12	—	66	75	81	78	3
2	10		434.3	.68	3.26	—	66	76	82	77	4
2	15		439.0	.68	3.26	—	66	75	83	77	4
3	20		443.6	.67	3.21	—	66	78	84	78	4
3	25		448.3	.67	3.21	—	66	77	84	78	4
4	30		453.0	.65	3.12	—	65	77	85	78	4
4	35		457.5	.65	3.12	—	65	75	83	78	4

PARTICULATE FIELD DATA

Client: USEPA-ELECTRIC-GRINDING Source: INLET

Operators: JAMES L. PARKER Test Date: 2-18-92 Run #: 3

Time: 3:16 - 5:21 Test Method: 13B

PT NO		CLOCK TIME	DGM READING $V_m(ft^3)$	ΔP (in.) H_2O	ΔH (in.) H_2O	HOT BOX TEMP (^0F)	IMP TEMP (^0F)	STACK TEMP (^0F)	DGM TEMP IN (^0F)	DGM TEMP OUT (^0F)	SAMPLE TRAIN
5	40		462.1	.62	2.97	—	66	71	82	77	3
5	45		466.6	.62	2.97	—	66	70	81	76	3
6	50		471.0	.68	3.26	—	66	69	80	75	4
6	55		475.6	.68	3.26	—	66	67	80	75	4
	0	5:21PM	480.379								
				$\sqrt{\Delta P}$							
			112.098	0.824	3.264		536		541		

PARTICULATE FIELD DATA

Client: USEPA-Electric Grinding Source: Inlet

Time: 8:08 — 10:12 Run #: IV Baro. Press.: 30.18

Test Method: 13B Number of Points/ports: 12/2

Sample Time per Point: 10 min Net Total Sample Time: 120 min

Stack Dimensions 14" Stack Ht. ——— Stack Press -2.1

Upstr. Dist. 8.2D Dwnstr. Dist. 2D Assumed Moisture: 2%

Console #: AST#2 Orifice #: 1.890 Meter Corr.: 0.985

EPA Box #: AST#2-Black Probe #: 3ft #1 Cp: 0.84

Nozzle #: 0.250 Pre test size: SEE RUN #1

K factor: 4.8 Post test size: " " " "

Filter #: ——— Silica #: Inlet Run #4

LEAK CHECKS

	Pre test	Post test
Sample Train	0.000 CFM @ 10" In. Hg	0.005 CFM @ 12.0 In. Hg
Pitot Press.	4.4 In. for 15 sec.	✓ In. for 15 sec.
Static Press.	6 In. for 15 sec.	✓ In. for 15 sec.
Method 3	——— In. for 15 sec.	——— In. for 15 sec.

MOISTURE

Inpinger (ml) 200 Gross 200 ml Tare 0 Net

Silica Gel (g) 224.50g Gross 200g Tare 24.50g Net 24.50g Total

GAS COMPOSITION

Sample type NA

		Pass 1	Pass 2	Pass 3	Average
Analysis type	$\%CO_2$				
	$\%O_2$				

Notes:

PARTICULATE FIELD DATA

Client: USEPA-Electric-Grinding Source: INLET

Operators: JAMES L. PARKER Test Date: 2-19-92 Run #: 4

Time: 8:08 — 10:12 Test Method: 13B

K = 4.8

PT NO		CLOCK TIME	DGM READING $V_m(ft^3)$	ΔP (in.) H_2O	ΔH (in.) H_2O	HOT BOX TEMP (^oF)	IMP TEMP (^oF)	STACK TEMP (^oF)	DGM TEMP IN (^oF)	DGM TEMP OUT (^oF)	SAMPLE TRAIN
~~1~~	0	8:08	~~480.700~~	.79	3.79	—	47	53	53	52	5
1	5		485.6	.79	3.79	—	45	53	56	52	5
2	10		490.5	.77	3.69	—	54	55	62	53	5
2	15		495.4	.79	3.79	—	57	57	66	56	5
3	20		500.2	.75	3.6	—	58	58	70	58	5
3	25		505.0	.70	3.36	—	56	58	72	60	4
4	30		509.7	.70	3.36	—	56	59	74	62	4
4	35		514.3	.66	3.16	—	58	61	77	64	4
5	40		518.9	.66	3.16	—	59	62	78	66	4
5	45		523.4	.70	3.36	—	57	62	80	68	4
6	50		527.9	.70	3.36	—	58	63	81	69	4
6	55		532.8	.72	3.45	—	61	64	82	71	4
1	0		537.403	.75	3.60	—	60	66	77	73	4
1	5		542.3	.75	3.60	—	60	67	81	74	4
2	10		547.0	.76	3.64	—	62	69	84	75	5
2	15		552.1	.76	3.68	—	64	71	87	77	4
3	20		556.8	.74	3.55	—	65	73	89	78	5
3	25		561.7	.76	3.68	—	66	74	90	80	5
4	30		566.7	.72	3.45	—	66	74	91	81	4
4	35		571.5	.74	3.55	—	66	76	92	82	4

PARTICULATE FIELD DATA

Client: USEPA-ELECTRIC-GRINDING Source: INLET

Operators: JAMES L. PARKER Test Date: 2-17-92 Run #: 4

Time: 8:08 - 10:12 Test Method: 13B

K = 4.8

PT NO		CLOCK TIME	DGM READING $V_m(ft^3)$	ΔP (in.) H_2O	ΔH (in.) H_2O	HOT BOX TEMP (^oF)	IMP TEMP (^oF)	STACK TEMP (^oF)	DGM TEMP IN (^oF)	DGM TEMP OUT (^oF)	SAMPLE TRAIN
5	40		576.3	.70	3.36	—	65	77	93	83	4
5	45		581.1	.70	3.36	—	65	75	93	84	4
6	50		585.9	.68	3.26	—	66	75	93	85	4
6	55		590.6	.76	3.64	—	66	75	93	86	4
0		10:12	595.501								5

PARTICULATE FIELD DATA

Client: USEPA-ELECTRIC-GRINDING Source: INLET

Time: 10:54 — 1:15 Run #: 5 Baro. Press.: 30.18

Test Method: 13B Number of Points/ports: 12/2

Sample Time per Point: 10 MIN Net Total Sample Time: 120 MIN

Stack Dimensions 14" Stack Ht.: ——— Stack Press -2.1

Upstr. Dist. 8.2D Dwnstr. Dist. 2D Assumed Moisture: 1%

Console #: AST#2 Orifice #: 1.890 Meter Corr.: 0.985

EPA Box #: AST#2-BLACK Probe #: 3FT. #1 Cp: 0.84

Nozzle #: 0.250 Pre test size: SEE RUN #1

K factor: 4.8 Post test size: " " " "

Filter #: ——— Silica #: INLET RUN #5

LEAK CHECKS

	Pre test	Post test
Sample Train	0.005 CFM @ 11 In. Hg	0.005 CFM @ 17.0 In. Hg
Pitot Press.	5.5 In. for 15 sec.	✓ In. for 15 sec.
Static Press.	5.5 In. for 15 sec.	✓ In. for 15 sec.
Method 3	— In. for 15 sec.	— In. for 15 sec.

MOISTURE

Inpinger (ml)	200 ml Gross	200 ml Tare	0 Net		
Silica Gel (g)	219.0 Gross	200 g Tare	19.0 g Net	19.0 g Total	

GAS COMPOSITION

Sample type NA

		Pass 1	Pass 2	Pass 3	Average
Analysis type	$\%CO_2$				
	$\%O_2$				

Notes:

PARTICULATE FIELD DATA

Client: USEPA ELECTRIC-GRINDING Source: INLET

Operators: JAMES L. PARKER Test Date: 2-19-92 Run #: 5

Time: 10:55 - 1:15 Test Method: 13B

K = 4.8

PT NO		CLOCK TIME	DGM READING $V_m(ft^3)$	ΔP (in.) H_2O	ΔH (in.) H_2O	HOT BOX TEMP (^oF)	IMP TEMP (^oF)	STACK TEMP (^oF)	DGM TEMP IN (^oF)	DGM TEMP OUT (^oF)	SAMPLE TRAIN
1	0	10:54	595.638	.78	3.74	—	66	75	83	84	12
* 1	5	602.355	600.645	.78	3.74	—	55	78	85	84	12
2	10		607.4	.78	3.74	—	50	80	90	85	12
2	15		612.7	.78	3.74	—	54	60.3	94	86	12
3	20		618.5	.71	3.40	—	57	61.3	97	89	10.5
3	25		622.6	.71	3.40	—	58	61.5	98	89	10.5
4	30		627.5	.70	3.36	—	58	~~84~~ 61.3	99	90	10
4	35		632.3	.66	3.16	—	61	61.7	100	91	10
5	40		637.1	.60	2.88	—	58	61.8	100	92	9
5	45		641.7	.62	2.97	—	57	61.6	100	92	9
6	50		646.3	.66	3.16	—	57	61.0	101	93	9
6	55		650.9	.65	3.12	—	59	61.3	102	94	9
1	0		655.501	.72	3.45	—	67	62.4	96	94	10
1	5		660.3	.70	3.36	—	63	62.1	96	92	10
2	10		665.1	.72	3.45	—	65	61.3	97	92	10
2	15		670.0	.72	3.45	—	62	63.3	98	93	10
3	20		674.8	.68	3.26	—	65	60.7	100	94	10
3	25		679.6	.68	3.26	—	67	61.5	101	94	10
4	30		684.4	.66	3.16	—	67	61.6	101	94	9
4	35		689.1	.66	3.16	—	65	63.1	99	93	9

PARTICULATE FIELD DATA

Client: USEPA Electric-Grinding Source: INLET

Operators: JAMES L. PARKER Test Date: 2-19-92 Run #: 5

Time: 10:55 - 1:15 Test Method: 13B

K = 4.8

PT NO		CLOCK TIME	DGM READING $V_m(ft^3)$	ΔP (in.) H_2O	ΔH (in.) H_2O	HOT BOX TEMP (^oF)	IMP TEMP (^oF)	STACK TEMP (^oF)	DGM TEMP IN (^oF)	DGM TEMP OUT (^oF)	SAMPLE TRAIN
5	40		693.8	.70	3.36	—	65	62.9	98	93	10
5	45		698.6	.65	3.12	—	64	63.3	97	92	10
6	50		703.3	.72	3.45	—	64	63.1	97	93	10
6	55		708.1	.70	3.36	—	65	62.9	95	92	10
*	0		712.901								

* Sample train was checked due to high vacuum. Leak check was performed before and after Investigation

before = 0.00 at 10.0

after = 0.005 at 15.0

PARTICULATE FIELD DATA

Client: USEPA-Electric Grinding Source: Inlet

Time: 1:54 — 4:07 Run #: 6 Baro. Press.: 30.18

Test Method: 13B Number of Points/ports: 12/2

Sample Time per Point: 10 min. Net Total Sample Time: 120 min.

Stack Dimensions 14" Stack Ht. ——— Stack Press -2.3

Upstr. Dist. 8.2D Dwnstr. Dist. 2D Assumed Moisture: 1%

Console #: AST#2 Orifice H: 1.890 Meter Corr.: 0.985

EPA Box #: AST#2-Black Probe #: 3ft #1 Cp: 0.84

Nozzle #: 0.250 Pre test size: SEE RUN #1

K factor: 4.8 Post test size: " " " "

Filter #: ——— Silica #: Inlet Run #6

LEAK CHECKS

	Pre test		Post test	
Sample Train	0.02 CFM @	18 In. Hg	0.000 CFM @	6.0 In. Hg
Pitot Press.	✓ In. for 15 sec.		✓ In. for 15 sec.	
Static Press.	✓ In. for 15 sec.		✓ In. for 15 sec.	
Method 3	— In. for 15 sec.		— In. for 15 sec.	

MOISTURE

Inpinger (ml) 210 Gross 200ml Tare 10 Net

Silica Gel (g) 218.6g Gross 200g Tare 18.6g Net 28.6g Total

GAS COMPOSITION

Sample type NA

		Pass 1	Pass 2	Pass 3	Average
Analysis type	$\%CO_2$				
	$\%O_2$				

Notes:

PARTICULATE FIELD DATA

Client: USEPA Electric-Grinding Source: Inlet

Operators: James L. Parker Test Date: 2-19-92 Run #: 6

Time: 1:54 – 4:07 Test Method: 13B

PT NO		CLOCK TIME	DGM READING $V_m(ft^3)$	ΔP (in.) H_2O	ΔH (in.) H_2O	HOT BOX TEMP (°F)	IMP TEMP (°F)	STACK TEMP (°F)	DGM TEMP IN (°F)	DGM TEMP OUT (°F)	SAMPLE TRAIN
1	0	1:54	714.920	.76	3.65	—	66	99	82	84	4
1	5		720.6	.76	3.65	—	67	79	87	83	4
2	10		724.9	.66	3.16	—	67	77	90	84	4
2	15		729.5	.69	3.31	—	67	78	90	84	3
3	20		734.2	.67	3.21	—	69	~~84~~ 77.5	89	84	4
3	25		738.8	.67	3.21	—	68	~~85~~ 79	90	84	4
4	30		743.5	.56	2.68	—	68	76	90	84	3
4	35		747.8	.62	2.97	—	68	76	89	84	3
5	40		752.3	.60	2.88	—	68	77	90	84	3
5	45		756.7	.56	2.68	—	~~68~~ 68	77	90	85	3
6	50		761.0	.60	2.88	—	~~68~~ 72	72	89	84	3
6	55		765.3	.51	2.44	—	~~68~~ 73	72	89	84	3
1	0		769.505	.66	3.16	—	58	68.5	80	82	3
1	5		774.4	.66	3.16	—	68	72	84	82	3
2	10		778.7	.64	3.07	—	74	68	86	82	3
2	15		783.2	.64	3.07	—	72	70	86	82	4
3	20		787.8	.64	3.07	—	72	71	88	82	4
3	25		792.4	.64	3.07	—	74	70	87	82	4
4	30		797.0	.60	2.88	—	77	66	86	81	3
4	35		801.4	.60	2.88	—	68	66	85	81	3

PARTICULATE FIELD DATA

Client: USEPA Electric-Grinding Source: INLET

Operators: JAMES L. PARKER Test Date: 2-19-92 Run #: 6

Time: 1:54 – 4:07 Test Method: 13B

K = 4.8

PT NO		CLOCK TIME	DGM READING $V_m(ft^3)$	ΔP (in.) H_2O	ΔH (in.) H_2O	HOT BOX TEMP (°F)	IMP TEMP (°F)	STACK TEMP (°F)	DGM TEMP IN (°F)	DGM TEMP OUT (°F)	SAMPLE TRAIN
5	40		805.9	.60	2.88	—	65	68	85	80	3
5	45		810.2	.60	2.88	—	65	69	85	80	3
6	50		814.6	.58	2.78	—	72	68	84	80	3
6	55		819.0	.60	2.88	—	70	68	82	79	3
0		4:07	823.305								

PARTICULATE FIELD DATA

Client: USEPA-Electric-Grinding Source: OUTLET

Time: 9:05 — 11:22 Run #: #2 Baro. Press.: 30.18

Test Method: 13B Number of Points/ports: 24/4

Sample Time per Point: 5 min. Net Total Sample Time: 120 MIN.

Stack Dimensions 17.5X23.75 Stack Ht. ——— Stack Press 0.070

Upstr. Dist. 3.77 D Dwnstr. Dist. 1 D Assumed Moisture: 0.01

Console #: AST #3 Orifice H: 1.947 Meter Corr.: 0.979

EPA Box #: AST #3-Blue Probe #: 36" #2 Cp: 0.84

Nozzle #: 0.250 #2 Pre test size: 0.250, 0.255, 0.251, 0.260, 0.252 → Average = 0.255

K factor: 5.0 Post test size: SAME

Filter #: ——— Silica #: OUTLET Run #1

LEAK CHECKS

	Pre test		Post test	
Sample Train	0.000 CFM @	16 In. Hg	0.000 CFM @	5.0 In. Hg
Pitot Press.	3.1 In. for 15 sec.		✓ In. for 15 sec.	
Static Press.	9.5 In. for 15 sec.		✓ In. for 15 sec.	
Method 3	— In. for 15 sec.		— In. for 15 sec.	

MOISTURE

Impinger (ml)	210 Gross	200 ml Tare	10 Net		
Silica Gel (g)	210.45 g Gross	200 g Tare	10.45 g Net	20.45 g Total	

GAS COMPOSITION

Sample type NA

Analysis type NA

	Pass 1	Pass 2	Pass 3	Average
$\%CO_2$				
$\%O_2$				

Notes:

PARTICULATE FIELD DATA

Client: U.S. EPA/Electric Grinding Source: Outlet

Operators: Jim Dini Test Date: 2-18 Run #: 1

Time: Start 9:05 Stop 11:22 Test Method: 13 B

K = 5.0

PT NO		CLOCK TIME	DGM READING $V_m(ft^3)$	ΔP (in.) H_2O	ΔH (in.) H_2O	HOT BOX TEMP (°F)	~~#4~~ IMP TEMP (°F)	~~#5~~ STACK TEMP (°F)	6 DGM TEMP IN (°F)	7 DGM TEMP OUT (°F)	SAMPLE TRAIN Vacuum
A 1	0	9:05	215.770	.13	0.65	—	37	63	64	62	2.0
2	5	9:10	218.7 ~~218.7~~	.09	0.45	—	48	62	66	63	1.0
3	10		220.7	.07	.35	—	51	63	68	64	1.0
4	15		222.4	.06	.30	—	47	62	71	66	1.0
5	20		224.0	.06	.30	—	46	63	72	67	1.0
6	25		225.5	.08	.40	—	49	63	74	69	1.0
B 1	30		227.3	.10	.50	—	48	63	75	72	2.0
2	35		229.6	.09	.45	—	49	63	77	72	1
3	40		231.5	.08	.40	—	50	64	78	73	1
4	45		233.3	.08	.4	—	53	64	80	75	1
5	50		235.2	.07	.35	—	53	64	81	76	1
6	55		236.8	.07	.35	—	53	64	81	77	1
C 1	60		238.5	.25	1.25	—	61	63	82	77	2
2	65		———	.18	.90	—	60	~~69~~ 70	86	80	2
3	70		244.8	.16	.80	—	63	73	86	80	2
4	75		247.3	.15	.75	—	63	73	88	81	2
5	80		249.7	.10	.50	—	64	71	88	82	2
6	85		252.0	.08	.40	—	67	72	88	82	2
D 1	90		254.1	.20	1.00	—	71	75	87	83	2
2	95		256.9	.19	.95		70	72	89	83	2

PARTICULATE FIELD DATA

Client: U.S. EPA / Electric Grinding Source: Outlet

Operators: Jim Dini Test Date: 2-18 Run #: 1

Time: Start 9:05 Stop 11:22 Test Method: 13B

K = 5.0

PT NO		CLOCK TIME	DGM READING $V_m(ft^3)$	ΔP (in.) H_2O	ΔH (in.) H_2O	HOT BOX TEMP (°F) 4	IMP TEMP (°F) 4	STACK TEMP (°F) 5	DGM TEMP IN (°F) 6	DGM TEMP OUT (°F) 7	SAMPLE TRAIN
D 3	100		259.5	.15	.75	~~60~~	58 ~~73.6~~	73.9	91	85	2
4	105		262.1	.16	.80	—	60	75.3	91	85	2
5	110		264.4	.09	.45	—	64	75	91	85	2
6	115		266.9	.07	.35	—	61	74.8	91	86	2
	120	11:22	269.315								
			53.595	$\sqrt{.332}$	0.577			538		537	

PARTICULATE FIELD DATA

Client: USEPA-Electric Grinding Source: OUTLET

Time: 12:22 — 2:31 Run #: #2

Test Method: 13B Baro. Press.: 30.18

Sample Time per Point: 5 MIN. Number of Points/ports: 24/4

Stack Dimensions 17.5 X 23.75 Net Total Sample Time: 120 MIN

Upstr. Dist. 3.77 D Stack Ht. _____ Dwnstr. Dist 1 D Stack Press 0.070

Console #: AST #3 Orifice #: _____ Assumed Moisture: 0.01

EPA Box #: AST #3-BLUE Probe #: 36" #2 Meter Corr.: 0.979

Nozzle #: 0.250 #2 Cp: 0.84

K Factor: 5.0 Pre test size: SEE RUN #1

Filter #: _____ Post test size: " " " "

Silica #: OUTLET RUN #2

LEAK CHECKS

	Pre test		Post test	
Sample Train	.01 CFM @	7 In. Hg	0.01 CFM @	5 In. Hg
Pitot Press.	5.5 In. for 15 sec.		✓ In. for 15 sec.	
Static Press.	6.0 In. for 15 sec.		✓ In. for 15 sec.	
Method 3	— In. for 15 sec.		— In. for 15 sec.	

MOISTURE

Impinger (ml)	210 Gross	200 Tare	10 Net		
Silica Gel (g)	210.60 g Gross	200 g Tare	10.60 g Net	20.60 g Total	

GAS COMPOSITION

Sample type NA

Analysis type NA

	Pass 1	Pass 2	Pass 3	Average
$\%CO_2$				
$\%O_2$				

Notes: _____

PARTICULATE FIELD DATA

Client: U.S. EPA / Electronic Grinding

Operators: Jim Dini Source: outlet

Time: Start 12:22 Stop 2:32 Test Date: 2-18 Run #: II

Test Method: 13B

K = 5 K = 4.7

PT NO		CLOCK TIME	DGM READING $V_m(ft^3)$	ΔP (in.) H_2O	ΔH (in.) H_2O	HOT BOX TEMP (°F)	4 IMP TEMP (°F)	5 STACK TEMP (°F)	6 DGM TEMP IN (°F)	7 DGM TEMP OUT (°F)	SAMPLE TRAIN
A 1	~~50~~	12:22	269.618	.27	1.35	—	74	73.9	81	82	4.5
2	~~5~~ 10		272.8	.25	1.25	—	69	74	83	81	4.5
3	~~15~~ 10		276.0	.2	1.00	—	74	75	85	81	4
4	~~20~~ 15		278.6	.15	.75	—	75	76	86	82	3
5	~~25~~ 20		280.0	.14	.65		68	74	87	82	3
6	~~30~~ 25		283.0	.12	.56	—	72	72.1	88	82	3
B 1	30		285.2	.23	1.08	—	73	72.9	84	83	4
2	35		288.2	.20	.94	—	68	74.9	87	83	4
3	40		290.6	.19	.89	—	68	72.9	88	83	4
4	45		293.1	.16	.75	—	68	74.9	88	83	3
5	50		295.4	.15	.70	—	68	75.1	89	84	3
6	55		297.7	.14	.66	—	68	73.0	88	84	3
C 1	60		299.9	.16	.75	—	68	73.1	84	83	3
2	65		302.2	.10	.47	—	68	73.7	89	85	3
3	70		304.3	.11	.51	—	68	74.1	87	84	3
4	75		306.3	.13	.61	—	68	75.4	87	84	3
5	80		308.5	.12	.56	—	68	74.4	87	84	3
6	85		310.4	.10	.47	—	68	74.5	87	84	3
1	90		312.3	.18	.84	—	68	72.7	85	83	3
2	95		315.0	.15	.70	—	68	75	87	83	3.5

PARTICULATE FIELD DATA

Client: U.S. EPA / Electronic Grinding Source: Outlet

Operators: Jim Dini Test Date: 2-18 Run #: 2

Time: 12:22 2:32 Test Method: 13B

PT NO		CLOCK TIME	DGM READING $V_m(ft^3)$	ΔP (in.) H_2O	ΔH (in.) H_2O	HOT BOX TEMP (^oF)	IMP TEMP (^oF) 4	STACK TEMP (^oF) 5	DGM TEMP IN (^oF) 6	DGM TEMP OUT (^oF) 7	SAMPLE TRAIN
3	~~105~~ 3 ~~120~~		317.1	.14	.65	—	68	72	87	83	3
4	~~110~~ 105		319.4	.13	.61	—	68	70	87	83	3
5	110 ~~115~~		321.5	.12	.56	—	68	74	87	83	3
6	115 ~~120~~		323.6	.10	.47	—	68	72.3	87	83	3
	120	2:32	325.388								

PARTICULATE FIELD DATA

Client: USEPA-Electric Grinding Source: OUTLET

Time: 3:16 — 5:23 Run #: 3 Baro. Press.: 30.18

Test Method: 13B Number of Points/ports: 24/4

Sample Time per Point: 5 MIN. Net Total Sample Time: 120

Stack Dimensions 17.5 x 23.75 Stack Ht. ——— Stack Press 0.070

Upstr. Dist. 3.77 D Dwnstr. Dist. 1 D Assumed Moisture: 0.01

Console #: AST #3 Orifice #: 1.947 Meter Corr.: 0.979

EPA Box #: AST #3-Blue Probe #: 36" #2 Cp: 0.84

Nozzle #: 0.250 #2 Pre test size: SEE Run #1

K Factor: 4.7 Post test size: " " " "

Filter #: ——— Silica #: OUTLET RUN #3

LEAK CHECKS

	Pre test	Post test
Sample Train	0.05 CFM @ 10 In. Hg	0.000 CFM @ 5.0 In. Hg
Pitot Press.	✓ In. for 15 sec.	✓ In. for 15 sec.
Static Press.	✓ In. for 15 sec.	✓ In. for 15 sec.
Method 3	— In. for 15 sec.	— In. for 15 sec.

MOISTURE

Impinger (ml) 200 ml Gross 200 ml Tare 0 Net

Silica Gel (g) 206.20 g Gross 200 g Tare 6.20 g Net 6.20 g Total

GAS COMPOSITION

Sample type NA

Analysis type NA

	Pass 1	Pass 2	Pass 3	Average
$\%CO_2$				
$\%O_2$				

Notes:

PARTICULATE FIELD DATA

Client: US. EPA

Source: Electronic Grinding Outlet

Operators: Jim Dini

Test Date: 2-18 Run #: 3

Time: 3:16 – 5:23

Test Method: 13B

K = 4.7

PT NO		CLOCK TIME	DGM READING $V_m(ft^3)$	ΔP (in.) H_2O	ΔH (in.) H_2O	HOT BOX TEMP (^oF)	IMP TEMP (^oF)	STACK TEMP (^oF)	DGM TEMP IN (^oF)	DGM TEMP OUT (^oF)	SAMPLE TRAIN
A6	0	3:16	326.235	.20	.94	—	79	76	77	78	2
5	5		329.0	.16	.75	—	82.7	72.7	81	78	2
4	10		331.3	.14	.67	—	68	73.3	82	79	2
3	15		333.5	.12	.56	—	68	71	83	79	2
2	20		335.5	.13	.61	—	68	69	82	79	2
1	25		337.5	.08	.38	—	69	69	82	79	1.5
B6	30		339.3	.14	.67	—	67	69	80	79	2
5	35		341.6	.10	.47	—	68	68.1	80	78	2
4	40		343.7	.11	.51	—	70	67	80	78	2
3	45		345.5	.11	.51	—	69	68	80	78	2
2	50		347.0	.09	.42	—	68	67	80	78	2
1	55		349.2	.24	1.13	—	68	67	78	77	2.5
C6	60		351.6	.21	.99	—	66	67	80	77	2
5	65		354.4	.19	.89	—	68	67	81	77	2
4	70		356.9	.14	.67	—	68	66.9	81	77	2
3	75		359.5	.12	.56	—	68	67.1	80	77	2
2	80		361.2	.12	.56	—	68	68	80	77	2
1	85		363.1	.12	.56	—	68	66	80	77	2
D6	90		365.2	.25	1.26	—	68	62.3	79	77	2
5	95		368.0	.27	1.26	—	68	64.9	79	76	2

PARTICULATE FIELD DATA

Client: US EPA Source: Electronic Grinding Outlet

Operators: Jim Bini Test Date: 2-18 Run #: 3

Time: 3:16 - 5:23 Test Method: 13 B

K = 4.7

PT NO		CLOCK TIME	DGM READING $V_m(ft^3)$	ΔP (in.) H_2O	ΔH (in.) H_2O	HOT BOX TEMP (^0F)	IMP TEMP (^0F)	STACK TEMP (^0F)	DGM TEMP IN (^0F)	DGM TEMP OUT (^0F)	SAMPLE TRAIN
4	100		370.7	.22	1.0	—	68	64.8	79	76	2
3	105		373.3	.14	.65	—	68	64.4	79	75	2
2	110		375.5	.12	.56	—	68	64.3	77	75	2
1	115		377.7	.12	.56	—	68	63.3	76	74	2
	120	5:23	379.6								
			53.365	.384	.758		521		530		

PARTICULATE FIELD DATA

Client: USEPA-ELECTRIC GRINDING Source: OUTLET

Time: 8:07 — 10:16 Run #: 4 Baro. Press.: 30.18

Test Method: 13B Number of Points/ports: 24/4

Sample Time per Point: 5 MIN. Net Total Sample Time: 120 MIN.

Stack Dimensions 17.5 X 23.75 Stack Ht. ——— Stack Press 0.070

Upstr. Dist. 3.77D Dwnstr. Dist. 1D Assumed Moisture: 0.01

Console #: AST#3 Orifice #: 1.947 Meter Corr.: 0.979

EPA Box #: AST#3-BLUE Probe #: 36" #2 Cp: 0.84

Nozzle #: 0.250 #2 Pre test size: SEE RUN #1

K factor: 4.7 Post test size: " " " "

Filter #: ——— Silica #: OUTLET RUN #4

LEAK CHECKS

	Pre test		Post test	
Sample Train	0.000 CFM @	12 In. Hg	0.005 CFM @	6 In. Hg
Pitot Press.	5 In. for 15 sec.		✓ In. for 15 sec.	
Static Press.	6 In. for 15 sec.		✓ In. for 15 sec.	
Method 3	— In. for 15 sec.		— In. for 15 sec.	

MOISTURE

Inpinger (ml) 205 Gross 200 ml Tare 5 Net

Silica Gel (g) 208.90 g Gross 200 g Tare 8.90 g Net 13.90 g Total

GAS COMPOSITION

Sample type NA

Analysis type NA

	Pass 1	Pass 2	Pass 3	Average
$\%CO_2$				
$\%O_2$				

Notes:

PARTICULATE FIELD DATA

Client: U.S. EPA / Electric Grinding Source: Outlet

Operators: Jim Dini Test Date: 2-19 Run #: 4

Time: 8:07 10:16 Test Method: 13 B

start finish K= 4.7

PT NO		CLOCK TIME	DGM READING $V_m(ft^3)$	ΔP (in.) H_2O	ΔH (in.) H_2O	HOT BOX TEMP (°F)	IMP TEMP (°F) 4	STACK TEMP (°F) 5	DGM TEMP IN (°F) 6	DGM TEMP OUT (°F) 7	SAMPLE TRAIN
A6	0	8:07	379.955	.19	.84	—	55	53	51	50	3
5	5		382.1	.18	.84	—	~~35~~ 55	59	55	51	3
4	10		384.9	.15	.71	—	35	59	58	52	3
3	15		386.8	.08	.38	—	36	59	61	54	2
2	20		389.2	.05	.24	—	36	89	62	55	1.5
1	25		390.9	.07	.33	—	38	58	63	57	1.5
B6	30		392.3	.2	.94	—	38	57	62	59	3
5	35		395.0	.18	.84	—	34	56	68	61	3
4	40		397.4	.14	.65	—	35	57	70	63	3
3	45		399.6	.07	.33	—	37	56.8	72	64	3
2	50		401.5	.07	.33	—	40	56.6	72	65	2
1	55		403.1	.06	.28	—	43	56.8	72	66	2
C6	60		404.7	.16	.75	—	44	57.0	73	68	2
5	65		407.5	.08	.38	—	40	57	76	70	3
4	70		409.4	.07	.33	—	43	57	78	71	2
3	75		411.1	.09	.42	—	48	57	79	72	2
2	80		412.9	.07	.33	—	47	57	80	74	2
1	85		414.6	.06	.28	—	52	57	81	75	2
D6	90		416.3	.18	.85	—	54	58	80	76	3
5	95		418.9	.11	.52	—	49	58	84	77	2

PARTICULATE FIELD DATA

Client: U.S. EPA/Electric Grinding Source: Outlet

Operators: Jim Dini Test Date: 2-19 Run #: 4

Time: 8:07 (start) 10:16 (finish) Test Method: 13B

K = 4.7

PT NO		CLOCK TIME	DGM READING $V_m(ft^3)$	ΔP (in.) H_2O	ΔH (in.) H_2O	HOT BOX TEMP (°F)	IMP TEMP (°F) 4	STACK TEMP (°F) 5	DGM TEMP IN (°F) 6	DGM TEMP OUT (°F) 7	SAMPLE TRAIN
4	100		420.9	.11	.52	—	48	58	84	78	2
3	105		422.8	.10	.47	—	48	59	84	79	2
2	110		424.3	.1	.47	—	51	58.6	84	80	2
1	115		426.4	.1	.47	—	50	58.8	84	80	2
	120	10:16	428.205			—					

PARTICULATE FIELD DATA

Client: USEPA-Electric Grinding Source: OUTLET

Time: 10:55 — 1:00 Run #: 5 Baro. Press.: 30.18

Test Method: 13B Number of Points/ports: 24/4

Sample Time per Point: 5 MIN. Net Total Sample Time: 120 MIN.

Stack Dimensions 17.5 x 23.75 Stack Ht. ——— Stack Press 0.070

Upstr. Dist. 3.77 D Dwnstr. Dist. 1 D Assumed Moisture: 0.01

Console #: AST #3 Orifice #: ——— Meter Corr.: 0.979

EPA Box #: AST #3-BLUE Probe #: 36" #2 Cp: 0.84

Nozzle #: 0.250 #2 Pre test size: SEE RUN #1

K factor: 4.7 Post test size: " " " "

Filter #: ——— Silica #: OUTLET RUN #5

LEAK CHECKS

	Pre test		Post test	
Sample Train	0.020 CFM @	10 In. Hg	0.000 CFM @	6 In. Hg
Pitot Press.	7 In. for 15 sec.		✓ In. for 15 sec.	
Static Press.	3.5 In. for 15 sec.		✓ In. for 15 sec.	
Method 3	— In. for 15 sec.		— In. for 15 sec.	

MOISTURE

Inpinger (ml) 205 Gross 200 g Tare 5 Net

Silica Gel (g) 208.2 g Gross 200 g Tare 8.2 g Net 13.20 g Total

GAS COMPOSITION

Sample type NA

Analysis type NA

	Pass 1	Pass 2	Pass 3	Average
$\%CO_2$				
$\%O_2$				

Notes:

PARTICULATE FIELD DATA

Client: US EPA/Electronic Grinding Source: Outlet

Operators: Jim Dini Test Date: 2-19 Run #: 5

Time: 10:55 Start 1:00 Finish Test Method: 13B

K=4.7

PT NO		CLOCK TIME	DGM READING $V_m(ft^3)$	ΔP (in.) H_2O	ΔH (in.) H_2O	HOT BOX TEMP (°F)	IMP TEMP (°F) 4	STACK TEMP (°F) 5	DGM TEMP IN (°F) 6	DGM TEMP OUT (°F) 7	SAMPLE TRAIN
A6	~~5~~ 0	10:55	~~428.7~~ 428.395	.17	.80	—	64	60	82	82	3
5	~~10~~ 5		—	.10	.47	—	49	60	84	82	2.5
4	~~15~~ 10		433.1	.11	.52	—	48	61	85	83	2.5
3	~~20~~ 15		435.2	.11	.52	—	47	60	86	83	2.5
2	20		437.5	.11	.52	—	52	60.4	88	84	3
1	25		438.9	.11	.52	—	55	60.4	89	85	3
B6	30		441.1	.15	.70	—	63	60.9	90	86	2
5	35		442.6	.12	.56	—	62	61.3	91	87	3
4	40		444.7	.11	.49	—	63	61.6	93	88	3
3	45		446.6	.13	.61	—	62	61.6	93	89	3
2	50		448.6	.13	.61	—	58	61.7	94	89	3
1	55		451.0	.12	.56	—	59	61.3	94	90	3
C6	60		452.9	.24	1.12	—	58	61.1	94	91	3
5	65		455.7	~~.23~~ .22	1.03	—	59	61	96	92	4
4	70		458.7	.21	.96	—	56	62	97	92	3.5
3	75		461.4	.15	.70	—	57	62	96	92	3
2	80		463.8	.12	.56	—	53	62	94	92	2.5
1	85		465.6	.06	.28	—	56	62	94	92	2
D6	90		467.4	.19	.89	—	58	61	93	93	3
5	95		470.0	.23	1.10		51	61	98	94	4

PARTICULATE FIELD DATA

Client: US. EPA / Electronic Grinding Source: Outlet

Operators: Jim Dini Test Date: 2-19 Run #: 5

Time: 10:55 1:00 Test Method: 13B

Start Finish

PT NO		CLOCK TIME	DGM READING $V_m(ft^3)$	ΔP (in.) H_2O	ΔH (in.) H_2O	HOT BOX TEMP (^oF)	IMP TEMP (^oF)	STACK TEMP (^oF)	DGM TEMP IN (^oF)	DGM TEMP OUT (^oF)	SAMPLE TRAIN
D4	100		472.8	.19	.84	—	53	61	99	94	3
3	105		—	.15	.71	—	54	63	98	95	3
2	110			.11	.52	—	54	63	97	95	2.5
1	115		479.9	.12	.56	—	54	63	96	95	3
	120		482.013								

PARTICULATE FIELD DATA

Client: USEPA-Electric Grinding Source: OUTLET

Time: 1:48 — 3:59 Run #: 6 Baro. Press.: 30.18

Test Method: 13B Number of Points/ports: 24/4

Sample Time per Point: 5 min. Net Total Sample Time: 120 MIN.

Stack Dimensions 17.5X23.75 Stack Ht. — Stack Press 0.09

Upstr. Dist. 3.77D Dwnstr. Dist 1D Assumed Moisture: 0.01

Console #: AST#3 Orifice H: 1.947 Meter Corr.: 0.979

EPA Box #: AST#3-BLUE Probe #: 36" # 2 Cp: 0.84

Nozzle #: 0.250 #2 Pre test size: SEE RUN #1

K factor: 4.7 Post test size: " " " "

Filter #: — Silica #: OUTLET RUN #6

LEAK CHECKS

	Pre test	Post test
Sample Train	0.005 CFM @ 13 In. Hg	0.000 CFM @ 6 In. Hg
Pitot Press.	✓ In. for 15 sec.	✓ In. for 15 sec.
Static Press.	✓ In. for 15 sec.	✓ In. for 15 sec.
Method 3	— In. for 15 sec.	— In. for 15 sec.

MOISTURE

Inpinger (ml) 205 Gross 200 ml Tare 5 Net 14.70 g Total

Silica Gel (g) 209.70 Gross 200 g Tare 9.70 g Net

GAS COMPOSITION

Sample type NA

Analysis type NA.

	Pass 1	Pass 2	Pass 3	Average
$\%CO_2$				
$\%O_2$				

Notes:

PARTICULATE FIELD DATA

Client: US EPA / Electronic Grinding Source: outlet

Operators: Jim Dini Test Date: 2-19-92 Run #: 6

Time: 1:48 (Start) 3:59 (Finish) Test Method: 13B

K = 4.7

PT NO		CLOCK TIME 1:48	DGM READING $V_m(ft^3)$	ΔP (in.) H_2O	ΔH (in.) H_2O	HOT BOX TEMP (°F)	IMP TEMP (°F)	STACK TEMP (°F)	DGM TEMP IN (°F)	DGM TEMP OUT (°F)	SAMPLE TRAIN
A6	~~0~~ 5		483.108	.25	1.18	—	64	80	84	85	4.5
5	~~5~~ 10		486.1	~~.18~~ .25	1.18	—	64	77	85	85	4.5
4	~~10~~ 15		489.0	.19	.89	—	62	79	90	88	3.5
3	~~15~~ 20		491.7	.13	.61	—	62	79	92	87	3
2	~~20~~ 25		493.8	.11	.57	—	62	79.8	87	85	2
1	~~25~~ 30		446.0	.09	.42	—	57	76.4	86	85	2
B6	~~30~~ 35		497.7	.19	.89	—	62	77.8	83	84	3
5	~~35~~ 40		500.2	.12	.56	—	56	77.7	85	83	3
4	~~40~~ 45		502.4	.10	.47	—	57	79.1	86	84	3
3	~~45~~ 50		504.6	.03	.14	—	59	76.5	85	84	2
2	~~50~~ 55		506.3	.03	.14	—	59	75.0	85	84	2
1	~~55~~ 60		508.0	.03	.14	—	59	75.0	85	84	2
C6	~~60~~ 65		509.5	.10	.47	—	65	70.9	82	83	2
5	~~65~~ 70		511.3	.19	.89	—	61	68.1	82	82	3
4	~~70~~ 75		513.0	.11	.51	—	59	69.3	83	82	3
3	~~75~~ 80		514.9	.12	.56	—	57	70.8	83	82	3
2	~~80~~ 85		516.5	.13	.61	—	57	68.2	83	82	3
1	~~85~~ 90		519	.12	.56	—	58	70.6	84	82	3
D6	~~90~~ 95		521	.14	.65	—	60	70.5	83	82	3
5	~~95~~ 100		523.4	.19	.89	—	56	71	84	81	3.5

PARTICULATE FIELD DATA

Client: US EPA / Electronic Grinding Source: Outlet

Operators: Jim Dini Test Date: 2-19-92 Run #: 6

Time: 1:48 3:59 Test Method: 13B

Start Finish K = 4.7

PT NO		CLOCK TIME	DGM READING $V_m(ft^3)$	ΔP (in.) H_2O	ΔH (in.) H_2O	HOT BOX TEMP (°F)	IMP TEMP (°F)	STACK TEMP (°F)	DGM TEMP IN (°F)	DGM TEMP OUT (°F)	SAMPLE TRAIN
D4	100		525.9	.12	.56	—	56	71	84	81	3
3	105		528.0	.11	.51	—	56	70	82	80	2.5
2	110		530.0	.13	.61	—	56	70	82	80	3
1	115		531.9	.11	.51	—	55	69	82	80	2.5
	120	3:59	533.825								

APPENDIX "C"

SAMPLING SUMMARY SHEET

[redacted] SAMPLING [redacted] MA[redacted]DE [redacted]

PLANT Electronic Chrome [illegible] LOCATION Santa Fe Springs, Calif

SAMPLED SOURCE Inlet [illegible]

Run	Date	N_p	(3) Y_m	(4) ΔH	(5) P Bar.	(6) V_m	(7) T_m	(8) V_m Std.	(9) %	(10) P_{st}	17 P_s	(18) T_s	(19) VP	(20) V_w	21 $V_{w_{gas}}$	22 %M	23 M_d
I-1	[illegible]	24	.985	3.20	30.18	114.323	82	111.515		-2.1	30.03	71	/	27.36	1.29	1.14	.989
I-2	[illegible]	24	.997	3.40	30.18	116.570	87	112.722	/	-2.1	30.03	74	/	[illegible]	1.73	1.51	.985
I-3	[illegible]	24	.990	3.34	30.18	112.695	81	109.584	/	-2.1	30.03	72	/	[illegible]	1.45	1.31	.987

Run	(24) CO_2	(25) O_2	26 N_2	(27) CO	(28) —	29 MW_d	30 MW	(31) C_p	(32) $\sqrt{\Delta P_s (T_s + 460)}$	(33) T_t	(34) D_n	35 V_s	(36) D_s	(37) Area	38 ACFM	(39) DSCFM	40 %I
I-1	[illegible]	21.0	78.3	/	/	28.95	28.84	.84	18.8655	120	.251	45.9	14.0	1.07	2945	2905	99.9
I-2	[illegible]	21.0	78.3	/	/	28.95	28.79	.84	19.4180	120	.251	47.4	14.0	1.07	3042	2973	95.5
I-3	[illegible]	21.0	78.3	/		28.95	28.81	.84	19.[illegible]	120	.251	46.7	14.0	1.07	2995	2922	97.28

$$V_m \text{ Std.} = Y_m \frac{17.64 \times V_m \left(P \text{ Bar.} + \frac{\Delta H}{13.6}\right)}{(T_m + 460)}$$

$$\%M = \frac{100 \times V_{w_{gas}}}{V_m \text{ Std.} + V_{w_{gas}}}$$

$$V_{w_{gas}} = 0.0471\ V_w$$

$$M_d = \frac{100 - \%M}{100}$$

$$MW_d = \%CO_2 \times .44 + (\%O_2 \times .32) + (\%CO + \%N_2) \times .28 + \left(\%\text{Other} \times \frac{\text{Mol. wt.}}{100}\right)$$

$$MW = MW_d \times M_d + 18(1 - M_d)$$

$$P_s = P \text{ Bar.} + \frac{P_{st}}{13.6}$$

$$V_s = 85.49 \times C_p \sqrt{\Delta P_s (T_s + 460)} \left[\frac{1}{P_s \times MW}\right]^{1/2}$$

$$\%I = \frac{0.09450 \times (T_s + 460) \times V_m \text{ Std.}}{V_s \times T_t \times P_s \times M_d \times A_n}$$

N_p = Total No. of Sampling points

Y_m = Meter Box Correction Factor

ΔH = Average Orifice Pressure Drop, Inches H_2O

P Bar. = Barometric Pressure, Inches Hg, Absolute

V_m = Volume of Dry Gas at Meter Conditions, DCF

T_m = Average Meter Temperature, °F.

V_m Std. = Volume of Dry Gas at STP, DSCF[a]

% = Per Cent other gas removed before Dry Gas Meter

P_{st} = Static Pressure of Stack Gas, Inches H_2O

P_s = Stack Gas Pressure, Inches Hg.

T_s = Average Stack Temperature, °F.

VP = Vapor Pressure of H_2O At Stack Temperature

V_w = Total H_2O Collected in Impingers and Silica Gel

$V_{w_{gas}}$ = Volume of water vapor collected at STP, SCF[b]

%M = Per Cent Moisture by volume

M_d = Mole Fraction of Dry Gas

$\%CO_2$ = Volume % Dry

$\%O_2$ = Volume % Dry

$\%N_2$ = Volume % Dry

%CO = Volume % Dry

MW_d = Molecular Weight of Stack Gas Dry Basis

MW = Molecular Weight of Stack Gas, Wet Basis

C_p = Pitot Tube Coefficient

$\sqrt{\Delta P_s (T_s + 460)}$ Is determined by averaging the square root of the product of the velocity head (ΔP_s) and the absolute stack temperature from each sampling point.

T_t = Net time of test in minutes

D_n = Sampling Nozzle Diameter, Inches

A_n = Area of Nozzle opening, ft^2.

V_s = Stack Gas Velocity at Stack Conditions, Feet per second.

D_s = Diameter of Stack, Inches

Area = Area of duct in ft^2

ACFM = Actual Cubic Feet per minute

DSCFM = Dry Standard Cubic Feet per minute

%I = Per Cent Isokinetic

[a] Dry Standard Cubic Feet @ 68°F, 29.92 In. Hg.

[b] Standard Conditions @ 68°F. 29. Hg.

PLANT [redacted] Electronic Chrome Grinding [redacted] LOCATION Santa Fe Springs, Calif

SAMPLED SOURCE Inlet

RUN	DATE	(1) V_m Std.	(2) DSCFM
I-1	18 Feb 92	111.515	2905
I-2	18 Feb 92	113.722	2973
I-3	18 Feb 92	107.584	2922
I-3			

FRONT HALF MILLIGRAMS				(4)	5
PROBE	CYCLONE	FILTER	(3) TOTAL	BACK HALF	FRONT + BACK TOTAL
			4.555		
			5.346		
		~~2.714~~	~~2.914~~		
			5.829		

Correct

CONCENTRATIONS

RUN	FRONT HALF Gr/DSCF	Mg/M³	Lb/Hr	Kg/Hr	BACK HALF Gr/DSCF	Mg/M³	Lb/Hr	Kg/Hr	TOTAL Gr/DSCF	Mg/M³	Lb/Hr	Kg/Hr
I-1	6.3×10^{-4}	1.443	.0157	.00712								
I-2	7.3×10^{-4}	1.675	.0217	.00846								
I-3	~~7.1×10^{-4}~~	~~1.937~~	~~.0103~~	~~.00466~~								
	8.21×10^{-4}	1.878	.02056	.009326								
	6	7	8	9	10	17	18	19	20	21	22	23

Remarks: Bottom Line I 3 is correct

SAMPLING SUMMARY SHEET

PLANT Electronic Chrome & Grinding LOCATION Santa Fe Springs, Calif.

SAMPLED SOURCE Inlet

Run	Date	N_p	(3) Y_m	(4) ΔH	(5) P Bar.	(6) V_m	(7) T_m	(8) V_m Std.	(9) %	(10) P_{st}	17 P_s	(18) T_s	(19) VP	(20) V_w	21 $V_{w_{gas}}$	22 %M	23 M_d
I-4	19 Feb 92	2-2	.985	3.51	30.18	114.201	75	113.532		-2.1	30.03	66	/	24.5	1.15	1.01	.990
I-5	19 Feb 92	2-2	.985	3.34	30.18	117.263	94	111.943		-2.1	30.03	64	/	19.0	0.89	0.79	.992
I-6	19 Feb 92	2-2	.985	3.02	30.18	108.385	85	105.695		-2.3	30.01	75	/	28.6	1.35	1.26	.987

Run	(24) CO_2	(25) O_2	26 N_2	(27) CO	(28) —	29 MW_d	30 MW	(31) C_p	(32) $\sqrt{\Delta P_s (T_s + 460)}$	(33) T_t	(34) D_n	35 V_s	(36) D_s	(37) Area	38 ACFM	(39) DSCFM	40 %I
I-4	[illegible]	[illegible]	[illegible]			[illegible]	28.84	0.84	19.5986	120	.251	47.83	14.0	1.07	[illegible]	3059	96.27
I-5	[illegible]	[illegible]	[illegible]			[illegible]	[illegible]	0.84	19.1659	120	.251	46.00	14.0	1.07	[illegible]	2999	[illegible]
I-6	[illegible]	[illegible]	[illegible]			[illegible]	28.81	0.84	18.3627	120	.251	44.70	14.0	1.07	2867	2813	96.93

$$V_m \text{ Std.} = Y_m \frac{17.64 \times V_m \left(P \text{ Bar.} + \frac{\Delta H}{13.6}\right)}{(T_m + 460)}$$

$$\%M = \frac{100 \times V_{w_{gas}}}{V_m \text{ Std.} + V_{w_{gas}}}$$

$$V_{w_{gas}} = 0.0471\ V_w$$

$$M_d = \frac{100 - \%M}{100}$$

$$MW_d = CO_2 \times .44 + (O_2 \times .32) + (CO + N_2) \times .28 + \left(\%\text{Other} \times \frac{\text{Mol. wt.}}{100}\right)$$

$$MW = MW_d \times M_d + 18(1 - M_d)$$

$$P_s = P \text{ Bar.} + \frac{P_{st}}{13.6}$$

$$V_s = 85.49 \times C_p \sqrt{\Delta P_s (T_s + 460)} \left[\frac{1}{P_s \times MW}\right]^{1/2}$$

$$\%I = \frac{0.09450 \times (T_s + 460) \times V_m \text{ Std.}}{V_s \times T_t \times P_s \times M_d \times A_n}$$

N_p = Total No. of Sampling points

Y_m = Meter Box Correction Factor

ΔH = Average Orifice Pressure Drop, inches H_2O

P Bar. = Barometric Pressure, Inches Hg, Absolute

V_m = Volume of Dry Gas at Meter Conditions, DCF

T_m = Average Meter Temperature, °F.

V_m Std. = Volume of Dry Gas at STP. DSCF[a]

% = Per Cent other gas removed before Dry Gas Meter

P_{st} = Static Pressure of Stack Gas, inches H_2O

P_s = Stack Gas Pressure, inches Hg.

T_s = Average Stack Temperature, °F

VP = Vapor Pressure of H_2O At Stack Temperature

V_w = Total H_2O Collected in Impingers and Silica Gel

$V_{w_{gas}}$ = Volumn of water vapor collected at STP, SCF[b]

%M = Per Cent Moisture by volume

M_d = Mole Fraction of Dry Gas

CO_2 = Volume % Dry

O_2 = Volume % Dry

N_2 = Volume % Dry

CO = Volume % Dry

MW_d = Molecular Weight of Stack Gas Dry Basis

MW = Molecular Weight of Stack Gas, Wet Basis

C_p = Pitot Tube Coefficient

$\sqrt{\Delta P_s (T_s + 460)}$ Is determined by averaging the square root of the product of the velocity head (ΔP_s) and the absolute stack temperature from each sampling point.

T_t = Net time of test in minutes

D_n = Sampling Nozzle Diameter, inches

A_n = Area of Nozzle opening, ft^2.

V_s = Stack Gas Velocity at Stack Conditions, Feet per second.

D_s = Diameter of Stack, inches

Area = Area of duct in ft^2

ACFM = Actual Cubic Feet per minute

DSCFM = Dry Standard Cubic Feet per minute

%I = Per Cent Isokinetic

[a]Dry Standard Cubic Feet @ 68°F, 29.92 in. Hg.

[b]Standard Conditions @ 68°F, 29. Hg.

LANT Electronic Chrome & Grinding LOCATION Santa Fe Springs, Calif.

AMPLED SOURCE Inlet

RUN	DATE	(1) V_m Std.	(2) DSCFM	FRONT HALF MILLIGRAMS PROBE	CYCLONE	FILTER	(3) TOTAL	(4) BACK HALF	(5) FRONT + BACK TOTAL
I-4	19 Feb 92	113.532	3059				.130		
I-5	19 Feb 92	111.943	.2999				.102		
I-6	19 Feb 92	105.095	2813				.111		

CONCENTRATIONS

RUN	FRONT HALF Gr/DSCF	Mg/M³	Lb/Hr	Kg/Hr	BACK HALF Gr/DSCF	Mg/M³	Lb/Hr	Kg/Hr	TOTAL Gr/DSCF	Mg/M³	Lb/Hr	Kg/Hr
I-4	1.77×10^{-5}	.0404	.000463	.000210								
I-5	1.43×10^{-5}	.0328	.000361	.000167								
I-6	1.63×10^{-5}	.0373	.000391	.000178								
	6	7	8	9	10	17	18	19	20	21	22	23

Remarks:

C-5

SAMPLING SUMMARY SHEET

PLANT Electronic Chrome & Grinding LOCATION Santa Fe Springs, Calif

SAMPLED SOURCE Outlet [redacted]

Run	Date	N_p	(3) Y_m	(4) ΔH	(5) P Bar.	(6) V_m	(7) T_m	(8) V_m Std.	(9) %	(10) P_{st}	17 P_s	(18) T_s	(19) VP	(20) V_w	21 $V_{w_{gas}}$	22 %M	23 M_d
1-0	18 Feb 92	24	.979	0.58	30.18	53.595	79	51.918	/	.07	30.19	68	/	20.45	0.96	1.82	.982
2-0	18 Feb 92	24	.979	0.74	30.18	55.770	85	53.451	/	.07	30.19	74	/	20.60	0.97	1.78	.982
3-0	18 Feb 92	24	.979	0.71	30.18	53.365	79	51.712	/	.07	30.19	68	/	6.20	0.29	0.56	.994

Run	(24) CO_2	(25) O_2	26 N_2	(27) CO	(28) —	29 MW_d	30 MW	(31) C_p	(32) $\sqrt{\Delta P_s (T_s + 460)}$	(33) T_t	(34) D_n	35 V_s	(36) D_s	(37) Area	38 ACFM	(39) DSCFM	40 %I
1-0	0.7	21.0	78.3	/	/	28.95	28.75	0.84	7.6178	120	.255	18.57	/	2.8863	3216	3185	110.6
2-0	0.7	21.0	78.3	/	/	28.95	28.76	0.84	9.0273	120	.255	22.00	/	2.8863	3810	3733	97.16
3-0	0.7	21.0	78.3	/	/	28.95	28.89	0.84	8.8214	120	.255	21.45	/	2.8863	3715	3727	94.16

$$V_m \text{ Std.} = Y_m \frac{17.64 \times V_m \left(P \text{ Bar.} + \frac{\Delta H}{13.6}\right)}{(T_m + 460)}$$

$$V_{v_{gas}} = 0.0471\, V_w$$

$$MW_d = ICO_2 \times .44 + (IO_2 \times .32) + (ICO + IN_2) \times .28 + \left(IOther \times \frac{Mol.\ wt.}{100}\right)$$

$$MW = MW_d \times M_d + 18(1 - M_d)$$

$$V_s = 85.49 \times C_p \sqrt{P_s (T_s + 460)} \left[\frac{1}{P_s \times MW}\right]^{1/2}$$

$$IH = \frac{100 \times V_{v_{gas}}}{V_m \text{ Std.} + V_{v_{gas}}}$$

$$M_d = \frac{100 - IH}{100}$$

$$P_s = P \text{ Bar.} + \frac{P_{st}}{13.6}$$

$$II = \frac{0.09450 \times (T_s + 460) \times V_m \text{ Std.}}{V_s \times T_t \times P_s \times M_d \times A_n}$$

N_p = Total No. of Sampling points

Y_m = Meter Box Correction Factor

ΔH = Average Orfice Pressure Drop, inches H_2O

P Bar. = Barometric Pressure, Inches Hg, Absolute

V_m = Volume of Dry Gas at Meter Conditions, DCF

T_m = Average Meter Temperature, °F.

V_m Std. = Volume of Dry Gas at STP, DSCF[a]

I = Per Cent other gas removed before Dry Gas Meter

P_{st} = Static Pressure of Stack Gas, inches H_2O

P_s = Stack Gas Pressure, Inches Hg.

T_s = Average Stack Temperature,

VP = Vapor Pressure of H_2O At Stack Temperature

V_w = Total H_2O Collected in Impingers and Silica Gel

$V_{v_{gas}}$ = Volumn of water vapor collected at STP, SCF[b]

IM = Per Cent Moisture by volume

M_d = Mole Fraction of Dry Gas

ICO_2 = Volume I Dry

IO_2 = Volume I Dry

IN_2 = Volume I Dry

ICO = Volume I Dry

MW_d = Molecular Weight of Stack Gas Dry Basis

MW = Molecular Weight of Stack Gas, Wet Basis

C_p = Pitot Tube Coefficient

$\sqrt{\Delta P_s (T_s + 460)}$ Is determined by averaging the square root of the product of the velocity head (P) and the absolute stack temperature from each sampling point.

T_t = Net time of test in minutes

D_n = Sampling Nozzle Diameter, inches

A_n = Area of Nozzle opening, ft^2.

V_s = Stack Gas Velocity at Stack Conditions, Feet per second.

D_s = Diameter of Stack, Inches

Area = Area of duct in ft^2

ACFM = Actual Cubic Feet per minute

DSCFM = Dry Standard Cubic Feet per minute

II = Per Cent Isokinetic

[a]Dry Standard Cubic Feet @ 68°F, 29.92 in. Hg.

[b]Standard Conditions @ 68°F. 29. Hg.

ANT Electronic Chrome & Grinding L..TION Santa Fe Springs, Calif

MPLED SOURCE Outlet

UN	DATE	(1) V_m Std.	(2) DSCFM	FRONT HALF MILLIGRAMS PROBE	CYCLONE	FILTER	(3) TOTAL	(4) BACK HALF	5 FRONT + BACK TOTAL
-0	18 Feb 92	51.918	3185				.0798		
-0	18 Feb 92	53.451	3733				.0989		
-0	18 Feb 92	51.712	3727				.0866		

CONCENTRATIONS

RUN	FRONT HALF Gr/DSCF	Mg/M³	Lb/Hr	Kg/Hr	BACK HALF Gr/DSCF	Mg/M³	Lb/Hr	Kg/Hr	TOTAL Gr/DSCF	Mg/M³	Lb/Hr	Kg/Hr
-0	2.37×10^{-5}	.0543	.000698	.000294								
-0	2.86×10^{-5}	.0653	.000914	.000414								
-0	2.58×10^{-5}	.0591	.000826	.000375								
	6	7	8	9	10	17	18	19	20	21	22	23

Remarks:

C - 7

SAMPLING SUMMARY SHEET

PLANT Electronic Chrome & Grinding LOCATION Santa Fe Springs, Calif.

SAMPLED SOURCE Outlet [redacted]

Run	Date	N_p	(3) Y_m	(4) ΔH	(5) P Bar.	(6) V_m	(7) T_m	(8) V_m Std.	(9) %	(10) P_{st}	17 P_s	(18) T_s	(19) VP	(20) V_w	21 $V_{w_{gas}}$	22 %M	23 M_d
4-0	19Feb92	24	.979	.52	30.18	48.250	70	47.527	/	.07	30.19	59	/	13.90	0.65	1.36	.986
5-0	19Feb92	24	.979	.68	30.18	53.618	91	50.822	/	.07	30.19	61	/	13.20	0.62	1.21	.988
6-0	19Feb92	24	.979	.60	30.18	50.717	83	48.771	/	.09	30.19	74	/	14.70	0.69	1.40	.986

Run	(24) CO_2	(25) O_2	26 N_2	(27) CO	(28) —	29 MW_d	30 MW	(31) C_p	(32) $\sqrt{\Delta P_s (T_s + 460)}$	(33) T_t	(34) D_n	35 V_s	(36) D_s	(37) Area	38 ACFM	(39) DSCFM	40 %I
4-0	0.7	21.0	78.3	/	/	28.95	28.80	0.84	7.4290	120	.255	18.09	/	2.8863	3133	3172	101.67
5-0	0.7	21.0	78.3	/	/	28.95	28.82	0.84	8.5628	120	.255	20.85	/	2.8863	3610	3697	94.57
6-0	0.7	21.0	78.3	/	/	28.95	28.80	0.84	8.0782	120	.255	19.68	/	2.8863	3407	3351	98.75

$$V_m \text{ Std.} = Y_m \frac{17.64 \times V_m \left(P \text{ Bar.} + \frac{\Delta H}{13.6}\right)}{(T_m + 460)}$$

$$\%H = \frac{100 \times V_{w_{gas}}}{V_m \text{ Std.} + V_{w_{gas}}}$$

$$V_{w_{gas}} = 0.0471\ V_w$$

$$M_d = \frac{100 - \%H}{100}$$

$$MW_d = \%CO_2 \times .44 + (\%O_2 \times .32) + (\%CO + \%N_2) \times .28 + \left(\%\text{Other} \times \frac{\text{Mol. wt.}}{100}\right)$$

$$MW = MW_d \times M_d + 18(1 - M_d)$$

$$P_s = P \text{ Bar.} \pm \frac{P_{st}}{13.6}$$

$$V_s = 85.49 \times C_p \sqrt{P_s (T_s + 460)} \left[\frac{1}{P_s \times MW}\right]^{1/2}$$

$$\%I = \frac{0.09450 \times (T_s + 460) \times V_m \text{ Std.}}{V_s \times T_t \times P_s \times M_d \times A_n}$$

N_p = Total No. of Sampling points

Y_m = Meter Box Correction Factor

ΔH = Average Orifice Pressure Drop, inches H_2O

P Bar. = Barometric Pressure, Inches Hg, Absolute

V_m = Volume of Dry Gas at Meter Conditions, DCF

T_m = Average Meter Temperature, °F.

V_m Std. = Volume of Dry Gas at STP, DSCF[a]

% = Per Cent other gas removed before Dry Gas Meter

P_{st} = Static Pressure of Stack Gas, inches H_2O

P_s = Stack Gas Pressure, inches Hg.

T_s = Average Stack Temperature, °F.

VP = Vapor Pressure of H_2O At Stack Temperature

V_w = Total H_2O Collected in Impingers and Silica Gel

$V_{w_{gas}}$ = Volume of water vapor collected at STP, SCF[b]

%H = Per Cent Moisture by volume

M_d = Mole Fraction of Dry Gas

$\%CO_2$ = Volume % Dry

$\%O_2$ = Volume % Dry

$\%N_2$ = Volume % Dry

%CO = Volume % Dry

MW_d = Molecular Weight of Stack Gas Dry Basis

MW = Molecular Weight of Stack Gas, Wet Basis

C_p = Pitot Tube Coefficient

$\sqrt{\Delta P (T_s + 460)}$ Is determined by averaging the square root of the product of the velocity head (ΔP) and the absolute stack temperature from each sampling point.

T_t = Net time of test in minutes

D_n = Sampling Nozzle Diameter, inches

A_n = Area of Nozzle opening, ft^2.

V_s = Stack Gas Velocity at Stack Conditions, Feet per second.

D_s = Diameter of Stack, Inches

Area = Area of duct in ft^2

ACFM = Actual Cubic Feet per minute

DSCFM = Dry Standard Cubic Feet per minute

%I = Per Cent Isokinetic

[a]Dry Standard Cubic Feet @ 68°F, 29.92 in. Hg.

[b]Standard Conditions @ 68°F. 29. Hg.

PLANT Electronic Chrome / Grinding LOCATION Santa Fe Springs Calif

SAMPLED SOURCE Outlet

RUN	DATE	(1) V_m Std.	(2) DSCFM
4-0	19Feb92	47.527	3172
5-0	19Feb92	50.822	3647
6-0	19Feb92	48.771	3351

FRONT HALF MILLIGRAMS			
PROBE	CYCLONE	FILTER	(3) TOTAL
			.0143
			.0118
			.00597

(4) BACK HALF	5 FRONT + BACK TOTAL

CONCENTRATIONS

FRONT HALF				BACK HALF				TOTAL			
RUN	Gr/DSCF	Mg/M³	Lb/Hr	Gr/DSCF	Mg/M³	Lb/Hr	Kg/Hr	Gr/DSCF	Mg/M³	Lb/Hr	Kg/Hr
4-0	4.64×10^{-6}	.0106	.000126								
5-0	3.58×10^{-6}	.00820	.000112								
6-0	2.84×10^{-6}	.00649	.0000815								
	6	7	8		10	17	18		20	21	22
			9				19				23

Remarks:

[redacted]

APPENDIX "D"

LABORATORY ANALYSIS REPORTS

AND

CHAIN OF CUSTODY

RESEARCH TRIANGLE INSTITUTE

RTI

Center for Environmental Measurements and Quality Assurance

April 16, 1992

Mr. Robert E. Turner
Advanced Systems Technology, Inc.
1627 Peachtree Road, Suite 222
Atlanta, GA 30309

Dear Robert,

Enclosed are the Cr(VI) and Total Chromium analysis results as determined by ion chromatography and ICP/GFAA, respectively, for the impinger samples received on February 24, 1992 for RTI Project No. 4848-02L, Advanced Systems Technology, Inc. P.O. No. 4005-011-01.

If you have any questions, please call me at 919-541-6569 or Peter Grohse at 919-541-6897.

Sincerely,

Kate Luk

Kate K. Luk, Ph.D.

Ref: 4848-02L
cc: W. Gutknecht
P. Grohse
N. Riggs

'ost Office Box 12194 Research Triangle Park, North Carolina 27709-2194
elephone 919 541-6914 Fax: 919 541-5929

II Project No. : 4848-02L

Samples : Impinger Samples
ompany : Advanced Systems Technology (P.O. No. : 4005-011-01)
nalyte : Cr (Total)
Methods of Analysis : IC/PCR for Cr(VI); ICP and GFAA for Total Cr
Samples Received : 2-24-92
eport Date : 4-16-92; Revised 10-27-92

Sample	Total Volume mL	Cr(VI) ug/mL	Total Cr(VI) ug	Vol.(mL) Taken for Digestion	Total Cr ug/mL	Total Cr ug	Original Total Cr ug/mL
eagent Blk	200	--	--	100	0.00480	0.480 *	--
Reagent Blk-Run 2	190	--	--	100	0.00890	0.846 *	--
nlet Blk #1	775	--	--	200	0.0253	4.90 *	--
utlet Blk #1	700	--	--	200	0.0290	5.08 *	--
nlet Run 1	845	--	--	50	5.39	4555	--
Inlet Run 2	900	--	--	50	5.94	5346	--
nlet Run 3 #1	500	--	--	50	6.69	3345	--
nlet Run 3 #2	450	--	--	50	5.52	2484	--
Inlet Run 4	825	--	--	200	0.632	130	--
nlet Run 5	725	--	--	200	0.572	104	--
nlet Run 6	700	--	--	200	0.633	111	--
Outlet Run 1	775	0.0792	61.4	50	0.103	79.8 *	--
utlet Run 2	860	0.108	92.9	50	0.115	98.9 *	--
utlet Run 3	900	0.0818	73.6	50	0.0962	86.6 *	--
Outlet Run 4	700	0.0156	10.9	200	0.0816	14.3 *	--
Outlet Run 5	775	0.0121	9.38	200	0.0611	11.8 *	--
utlet Run 6	850	0.0112	9.52	200	0.0422	8.97 *	--
crub. Water Run 1	--	--	--	2.00	4.01	--	100
Scrub. Water Run 2	--	--	--	2.00	4.96	--	124
crub. Water Run 3	--	--	--	2.00	5.30	--	133
crub. Water Run 4	--	--	--	2.00	1.98	--	49.5
Scrub. Water Run 5	--	--	--	2.00	1.84	--	46.0
crub. Water Run 6	--	--	--	2.00	2.05	--	51.3
ank Run 1	--	--	--	1.00**	5.28	--	1.32E+04
ank Run 2	--	--	--	1.00**	4.70	--	1.18E+04
ank Run 3	--	--	--	1.00**	4.80	--	1.20E+04
ank Run 4	--	--	--	1.00**	4.68	--	1.17E+04
ank Run 5	--	--	--	1.00**	3.80	--	9.50E+03
ank Run 6	--	--	--	1.00**	4.66	--	1.17E+04
etection Limit		0.0015			0.006 (ICP) 0.002 (GFAA)		

: Results were obtained from GFAA
* : Sample was diluted 50 times with deionized water before 1 mL of sample aliquot was taken for digestion.

or Reagent Blk, Inlet and Outlet Samples :
otal Cr, ug = (Total Cr, ug/mL * Diluted Vol. (50.00 mL) / Vol.(mL) Taken for Digestion) * Total Volume, mL

r Scrubber Water Samples :
riginal Total Cr, ug/mL = Total Cr, ug/mL * Diluted Vol. (50.00 mL) / Vol. (mL) Taken for Digestion

or Tank Samples :
riginal Total Cr, ug/mL = Total Cr, ug/mL * Diluted Vol. (50.00 mL) * 50

RTI Project No. : 4848-02L

Samples : QC for Impinger Samples
Company : Advanced Systems Technology (P.O. No. : 4005-011-01)
Analyte : Cr (Total)
Methods of Analysis : IC/PCR for Cr(VI); ICP and GFAA for Total Cr
Samples Received : 2-24-92
Report Date : 4-16-92; Revised 10-27-92

Calibration Check Sample

Sample	Tot. Cr ug/mL Measured	Tot. Cr ug/mL Expected
QC	1.98	2.00
QC	1.99	2.00
QC	0.0201*	0.0186
QC	0.0204*	0.0186

Results of Blank and Duplicate Analysis

Sample	Tot. Cr ug/mL Measured	Tot. Cr ug/mL Expected	Tot. Cr % Recovery
RTI Reagent Blk	0.0490*	--	--
RTI Reagent Blk	0.0332*	--	--
Scrub. Water Run 1	4.12	--	--
Scrub. Water Run 2	4.96	--	--
SRM (WP481)	0.0460*	0.0522	88.1
SRM (WP481)	0.0530*	0.0522	103

* : Results were obtained from GFAA

CHAIN OF CUSTODY

Client: USEPA Source: Electronic Grinding Date 2-20-92

Description of Samples: Inlet + Outlet

Collection Team Leader: Robert Turner Signature: [signature]

SAMPLES COLLECTED

SAMPLE ID	DESCRIPTION
Run 1,2,3,4,5,6	Inlet
Run 1,2,3,4,5,6	Outlet
2	Sample Train Blank
2	Reagent Blank
	All samples contain Chromic Acid used in Chrome Plating

Condition of Samples on Arrival

Shipping Box Damaged? _____ Containers Open? _____

Liquid Levels Marked? _____ Liquid Levels Changed? _____

Laboratory Person Receiving Sample: _____

Signature: _____ Date: _____

Storage Location: _____

Comments: All samples to be analyzed for Chrome using AA. Outlet is also to be analyzed for Hexavalent chrome using Ion Chromatography

CHAIN OF CUSTODY

Client: USEPA Source: Electronic Grinding Date 2-20-92

Description of Samples: Scrubber water + Tank 8

Collection Team Leader: Robert Turner Signature: [illegible]

SAMPLES COLLECTED

SAMPLE ID	DESCRIPTION
Run 1,2,3,4,5,6	Scrubber Water samples
Run 1,2,3,4,5,6	Tank 8 samples
	All samples contain Chromic Acid used in Chrome plating

Condition of Samples on Arrival

Shipping Box Damaged? _____ Containers Open? _____

Liquid Levels Marked? _____ Liquid Levels Changed? _____

Laboratory Person Receiving Sample: _____

Signature: _____ Date: _____

Storage Location: _____

Comments: Analyze for Chrome using AA

APPENDIX "E"

AMP HOUR CALCULATIONS

APPENDIX E.

Ampere-Hour Calculations

Ampere-Hour Calculations
Test Run No. 1
Tank No. 8

Date: February 18, 1992

Time, 24-h clock		Time interval, min		Current, amperes	Ampere-hours[a]	
Inlet	Outlet	Inlet	Outlet		Inlet	Outlet
9:05	9:05					
9:15	9:15	10	10	4,500	750	750
9:30	9:30	15	15	4,600	1,150	1,150
9:35	9:35	5	5	4,600	383	383
Subtotal		30	30		2,283	2,283
9:41	9:41	6	--	4,800	480	--
9:45	9:45	4	4	4,800	320	320
10:00	10:00	15	15	4,800	1,200	1,200
10:05	10:05	5	5	4,800	400	400
Subtotal		30	24		2,400	1,920
10:11	10:11	--	6	4,800	--	480
Subtotal			6		--	480
10:20	10:17	--	--	--	--	--
10:30	10:30	10	13	4,900	817	1,062
10:45	10:45	15	15	4,900	1,225	1,225
10:47	10:47	2	2	4,900	163	163
Subtotal		27	30		2,205	2,450
10:52	10:52	5	--	4,900	408	--
11:00	11:00	8	8	4,900	653	653
11:15	11:15	15	15	4,950	1,238	1,238
11:20	11:22	5	7	5,000	417	583
Subtotal		33	30		2,716	2,474
Total		120	120		9,600	9,600

[a]Total current (ampere-hours) is calculated by: (1) multiplying the current (amperes) by the actual time of testing (hours) at that particular current and (2) totaling the ampere-hour values for each time interval of the entire test run. The total ampere-hours calculated will not equal the ampere-hours from the ampere-hour meter due to the differences between the sampling time and the actual time required to complete the test. The sampling time and the time required to perform the test are different due to down time for port changes and other process interruptions.

Ampere-Hour Calculations
Test Run No. 2
Tank No. 8

Date: February 18, 1992

Time, 24-h clock		Time interval, min		Current, amperes	Ampere-hours[a]	
Inlet	Outlet	Inlet	Outlet		Inlet	Outlet
12:26	12:22					
12:30	12:30	4	8	4,800	320	640
12:45	12:45	15	15	4,900	1,225	1,225
12:52	12:52	7	7	5,000	583	583
Subtotal		26	30		2,128	2,448
12:55	12:55	3	--	5,000	250	--
13:00	13:00	5	5	5,000	417	417
13:15	13:15	15	15	5,000	1,250	1,250
13:26	13:25	11	10	5,000	917	833
Subtotal		34	30		2,834	2,500
13:32	13:28	--	--			
13:34	13:45	13	17	5,200	1,127	1,473
13:58	13:58	13	13	5,100	1,105	1,105
Subtotal		26	30		2,232	2,578
14:02	14:02	4	--	5,100	340	--
14:15	14:15	13	13	5,200	1,127	1,127
14:30	14:30	15	15	5,300	1,325	1,325
14:32	14:32	2	2	5,300	177	177
Subtotal		34	30		2,969	2,629
Total		120	120		10,200	10,200

[a]Total current (ampere-hours) is calculated by: (1) multiplying the current (amperes) by the actual time of testing (hours) at that particular current and (2) totaling the ampere-hour values for each time interval of the entire test run. The total ampere-hours calculated will not equal the ampere-hours from the ampere-hour meter due to the differences between the sampling time and the actual time required to complete the test. The sampling time and the time required to perform the test are different due to down time for port changes and other process interruptions.

Ampere-hour Calculations
Test Run No. 3
Tank No. 8

Date: February 18, 1992

Time, 24-h clock		Time interval, min		Current, amperes	Ampere-hours[a]	
Inlet	Outlet	Inlet	Outlet		Inlet	Outlet
15:16	15:16					
15:30	15:30	14	14	5,000	1,167	1,167
15:46	15:46	16	16	5,100	1,360	1,360
Subtotal		30	30		2,527	2,527
15:48	15:48	2	--	5,150	172	--
16:00	16:00	12	12	5,150	1,030	1,030
16:16	16:18	16	18	5,000	1,333	1,500
Subtotal		30	30		2,535	2,530
16:21	16:20	--	--	--	--	--
16:30	16:30	9	10	5,100	765	850
16:45	16:45	15	15	5,100	1,275	1,275
16:50	16:50	5	5	5,150	429	429
Subtotal		29	30		2,469	2,554
15:53	16:53	3	--	5,150	258	--
17:00	17:00	7	7	5,150	601	601
17:15	17:15	15	15	5,200	1,300	1,300
17:21	17:23	6	8	5,200	520	693
Subtotal		31	30		2,679	2,594
Total		120	120		10,200	10,200

[a]Total current (ampere-hours) is calculated by: (1) multiplying the current (amperes) by the actual time of testing (hours) at that particular current and (2) totaling the ampere-hour values for each time interval of the entire test run. The total ampere-hours calculated will not equal the ampere-hours from the ampere-hour meter due to the differences between the sampling time and the actual time required to complete the test. The sampling time and the time required to perform the test are different due to down time for port changes and other process interruptions.

DRAFT
1701-8E/709517
7/16/92 5

Ampere-Hour Calculations
Test Run No. 4
Tank No. 8

Date: February 19, 1992

Time, 24-h clock		Time interval, min		Current, amperes	Ampere-hours[a]	
Inlet	Outlet	Inlet	Outlet		Inlet	Outlet
8:08	8:07					
8:15	8:15	7	8	4,600	537	613
8:30	8:30	15	15	4,850	1,213	1,213
8:37	8:37	7	7	5,000	583	583
Subtotal		29	30		2,333	2,409
8:40	8:40	3		5,000	250	--
8:45	8:45	5	5	5,000	417	417
9:00	9:00	15	15	5,000	1,250	1,250
9:08	9:10	8	10	5,100	680	850
Subtotal		31	30		2,597	2,517
	9:13	--	--		--	--
	9:15	--	2	5,100	--	170
9:21	9:21	--	6	5,150	--	515
9:30	9:30	9	9	5,150	773	773
9:45	9:43	15	13	5,150	1,288	1,116
Subtotal		24	30		2,061	2,574
9:46	9:46	1	--	5,400	90	--
10:00	10:00	14	14	5,400	1,260	1,260
10:15	10:16	15	16	4,900	1,225	1,307
10:21		6	--	5,100	510	--
Subtotal		36	30		3,085	2,567
Total		120	120		10,100	10,100

[a]Total current (ampere-hours) is calculated by: (1) multiplying the current (amperes) by the actual time of testing (hours) at that particular current and (2) totaling the ampere-hour values for each time interval of the entire test run. The total ampere-hours calculated will not equal the ampere-hours from the ampere-hour meter due to the differences between the sampling time and the actual time required to complete the test. The sampling time and the time required to perform the test are different due to down time for port changes and other process interruptions.

Ampere-Hour Calculations
Test Run No. 5
Tank No. 8

Date: February 19, 1992

Time, 24-h clock		Time interval, min		Current, amperes	Ampere-hours[a]	
Inlet	Outlet	Inlet	Outlet		Inlet	Outlet
10:55	10:55					
11:15	11:15	20	20	5,250	1,750	1,750
11:25	11:25	10	10	5,100	850	850
Subtotal		30	30		2,600	2,600
11:27	11:27	2	--	5,100	170	--
11:30	11:30	3	3	5,100	255	255
11:45	11:45	15	15	5,100	1,275	1,275
11:55	11:57	10	12	5,100	850	1,020
Subtotal		30	30		2,550	2,550
--	11:59	--	--		--	--
--	12:00	--	1	5,100	--	85
12:15	12:15	--	15	5,100	--	1,275
12:29	12:29	14	14	5,100	1,190	1,190
Subtotal		14	30		1,190	2,550
12:30	12:30	1	--	5,100	85	--
12:45	12:45	15	15	5,000	1,250	1,250
13:00	13:00	15	15	5,000	1,250	1,250
13:15	--	15	--	5,000	1,250	--
Subtotal		46	30		3,835	2,500
Total		120	120		10,200	10,200

[a]Total current (ampere-hours) is calculated by: (1) multiplying the current (amperes) by the actual time of testing (hours) at that particular current and (2) totaling the ampere-hour values for each time interval of the entire test run. The total ampere-hours calculated will not equal the ampere-hours from the ampere-hour meter due to the differences between the sampling time and the actual time required to complete the test. The sampling time and the time required to perform the test are different due to down time for port changes and other process interruptions.

Ampere-Hour Calculations
Test Run No. 6
Tank No. 8

Date: February 19, 1992

Time, 24-h clock		Time interval, min		Current, amperes	Ampere-hours[a]	
Inlet	Outlet	Inlet	Outlet		Inlet	Outlet
13:54	13:48					
14:00	14:00	6	12	4,900	490	980
14:15	14:15	15	15	4,800	1,200	1,200
14:18	14:18	3	3	5,100	255	255
Subtotal		24	30		1,945	2,435
14:22	14:22	4	--	5,100	340	--
14:30	14:30	8	8	5,100	680	680
14:45	14:45	15	15	5,300	1,325	1,325
14:54	14:52	9	7	5,300	795	618
Subtotal		36	30		3,140	2,623
--	14:56	--	--	--	--	--
15:07	15:00	--	4	5,300	--	353
15:15	15:15	8	15	4,900	653	1,225
15:26	15:26	11	11	5,000	917	917
Subtotal		19	30		1,570	2,495
15:29	15:29	3	--	5,000	250	--
15:45	15:45	16	16	5,000	1,333	1,333
16:00	15:59	15	14	5,100	1,275	1,190
16:07	--	7	--	5,100	595	--
Subtotal		41	30		3,453	2,523
Total		120	120		10,100	10,100

[a]Total current (ampere-hours) is calculated by: (1) multiplying the current (amperes) by the actual time of testing (hours) at that particular current and (2) totaling the ampere-hour values for each time interval of the entire test run. The total ampere-hours calculated will not equal the ampere-hours from the ampere-hour meter due to the differences between the sampling time and the actual time required to complete the test. The sampling time and the time required to perform the test are different due to down time for port changes and other process interruptions.

DRAFT
1701-8E/709517
7/16/92 8

SOURCE SAMPLING DATA SHEET
ELECTRONIC CHROME AND GRINDING COMPANY
SANTA FE SPRINGS, CALIFORNIA

Test Run No. 1			Date: 2/18/92			Page 1 of 1
Time, 24-h clock	Tank No.	Operating current, amperes	Operating voltage, volts	Operating temp., °F	Ah readings	Notes
9:05	8	4,500	6.0	130	294,003	Starting testing at 9:05
9:15	8	4,600	6.2	130	294,686	
9:30	8	4,600	6.2	130	295,713	
9:45	8	4,800	6.2	130	297,018	Composite sample taken at 9:45
10:00	8	4,800	6.3	133	298,231	
10:15	8	4,900	6.4	135	299,627	Composite sample taken at 10:45
10:30	8	4,900	6.4	135	300,810	
10:45	8	4,900	6.4	135	302,029	
11:00	8	4,950	6.4	136	303,262	
11:15	8	5,000	6.4	136	304,726	Stopped testing at 11:22 Composite sample taken at 11:15

DRAFT
1701-8E/709517
7/16/92 9

SOURCE SAMPLING DATA SHEET
ELECTRONIC CHROME AND GRINDING COMPANY
SANTA FE SPRINGS, CALIFORNIA

Test Run No. 2			Date: 2/18/92			Page 1 of 1
Time, 24-h clock	Tank No.	Operating current, amperes	Operating voltage, volts	Operating temp., °F	Ah readings	Notes
12:20	8	4,800	6.2	138	310,397	Started testing at 12:22 Complete sample taken at 12:25
12:30	8	4,900	6.2	138	311,267	
12:45	8	5,000	6.2	136	312,467	
13:00	8	5,000	6.2	135	313,807	
13:30	8	5,200	6.0	136	316,432	Composite sample taken at 13:20
13:45	8	5,100	6.0	136	317,959	
14:00	8	5,200	6.0	136	319,270	
14:15	8	5,300	6.0	138	320,597	Composite sample taken at 14:15
14:30	8	5,300	6.0	138	321,985	Stopped testing at 14:32

DRAFT
1701-8E/709517
7/16/92 10

SOURCE SAMPLING DATA SHEET
ELECTRONIC CHROME AND GRINDING COMPANY
SANTA FE SPRINGS, CALIFORNIA

Test Run No. 3			Date: 2/18/92			Page 1 of 1
Time, 24-h clock	Tank No.	Operating current, amperes	Operating voltage, volts	Operating temp., °F	Ah readings	Notes
15:15	8	5,000	6.0	138	326,296	Started testing at 15:16 Composite sample taken at 15:15
15:30	8	5,100	5.9	138	327,687	
15:45	8	5,150	5.9	138	328,973	
16:00	8	5,000	5.8	138	330,368	
16:15	8	5,100	5.8	138	331,708	Composite sample taken at 16:15
16:30	8	5,100	5.8	138	333,214	
16:45	8	5,150	5.8	138	334,403	
17:00	8	5,200	5.8	138	335,800	
17;15	8	5,200	5.8	138	337,097	
17:20	8	5,200	5.8	136	337,790	Composite sample taken at 17:30 Stopped testing at 17:23

DRAFT
1701-8E/709517
7/16/92 11

SOURCE SAMPLING DATA SHEET
ELECTRONIC CHROME AND GRINDING COMPANY
SANTA FE SPRINGS, CALIFORNIA

Test Run No. 4			Date: 2/19/92			Page 1 of 1
Time, 24-h clock	Tank No.	Operating current, amperes	Operating voltage, volts	Operating temp., °F	Ah readings	Notes
8:00	8	4,600	5.5	132	340,509	Started testing at 8:07 Initial foam blanket addition was made at 7:00 and consisted of 1.5 gallons of Fumetrol 101. Composite sample taken at 8:00
8:15	8	4,850	5.6	134	341,565	
8:30	8	5,000	5.6	135	342,831	
8:45	8	5,000	5.6	135	344,373	
9:00	8	5,100	5.6	135	345,436	Composite sample taken at 9:00
9:15	8	5,150	5.6	136	346,892	
9:30	8	5,150	5.6	135	348,200	
9:45	8	5,400	5.4	140	349,948	
10:00	8	4,900	5.4	142	351,130	Composite sample taken at 10:00
10:15	8	5,100	5.4	143	352,559	Stopped testing at 10:16

DRAFT
1701-8E/709517
7/16/92 12

SOURCE SAMPLING DATA SHEET
ELECTRONIC CHROME AND GRINDING COMPANY
SANTA FE SPRINGS, CALIFORNIA

Test Run No. 5			Date: 2/19/92			Page 1 of 1
Time, 24-h clock	Tank No.	Operating current, amperes	Operating voltage, volts	Operating temp., °F	Ah readings	Notes
10:55	8	5,250	5.4	145	356,082	Started testing at 10:55 Composite sample taken at 10:55
11:15	8	5,100	5.4	148	358,175	
11:30	8	5,100	5.4	150	359,515	
11:45	8	5,100	5.4	148	360,924	
12:00	8	5,100	5.4	146	362,294	Composite sample taken at 12:00
12:15	8	5,100	5.4	145	363,589	
12:30	8	5,000	5.4	145	365,078	
12:45	8	5,000	5.4	144	366,305	
13:00	8	5,000	5.4	142	367,859	Composite sample taken at 13:00
13:15	8	5,050	5.4	142	369,021	Stopped testing at 13:15

DRAFT
1701-8E/709517
7/16/92 13

SOURCE SAMPLING DATA SHEET
ELECTRONIC CHROME AND GRINDING COMPANY
SANTA FE SPRINGS, CALIFORNIA

Test Run No. 6			Date: 2/19/92			Page 1 of 1
Time, 24-h clock	Tank No.	Operating current, amperes	Operating voltage, volts	Operating temp., °F	Ah readings	Notes
13:50	8	4,900	5.4	140	372,213	Started testing at 13:48 Makeup addition: 1/2 gallon of Fumetrol 101 added at 13:50 Composite sample taken at 13:50
14:00	8	4,800	5.4	140	373,300	
14:15	8	5,100	5.5	140	374,442	
14:30	8	5,300	5.5	140	375,767	
14:45	8	5,300	5.6	140	377,197	
15:00	8	4,900	5.6	140	378,552	Composite sample taken at 15:00 Rectifier tripped off from 15:00 to 15:05
15:15	8	5,000	5.4	140	380,027	
15:30	8	5,000	5.4	140	381,213	
15:45	8	5,100	5.4	140	382,690	
16:00	8	5,100	5.4	140	383,950	Composite sample taken at 16:00 Stopped testing at 16:07

Technical Information

FUMETROL* 101 Fume And Spray Suppressant†

Fumetrol 101 Fume and Spray Suppressant has been developed primarily to fill the needs of the industrial chromium (hard chrome) industry. It eliminates fumes from plating without affecting the catalyst ratios or causing pitting. It is a unique product which can be used with confidence under all conditions of chromium plating.

Advantages

Fast Acting

Fumes disappear immediately after adding Fumetrol 101 to chromium bath.

Completely Inert

It has no effect on the balance and/or control of the plating bath. It is compatible with all SRHS* and ordinary (sulfate) chromium plating solutions. It does not cause pitting, and does not lower surface tension.

Savings

When Fumetrol 101 is used, chromic acid fumes are essentially eliminated. This results in a cost saving as very litte, if any, goes up the exhaust duct. It is also possible to reduce the volume and velocity of air in the ventilation system if this does not violate local laws and regulations. Fumetrol 101 also reduces heat loss from the surface which lowers heating costs, although under severe working loads it may be necessary to cool the solution. Its use also reduces health hazards, and the whole work area is cleaner—bus bar, exhaust ducts, and super-structure are free from chromic acid accumulations.

Cleaner

The exhaust from draft boxes is cleaner when Fumetrol 101 is used, even without fume scrubbers. Less chrome is sucked into the air with a reduction in damage to the surroundings.

Important Notice Regarding This Information

The statements, technical information and recommendations contained in this document are based on tests that are believed to be reliable. However, this document is not contractual, and NOTHING IN IT CONSTITUTES A WARRANTY THAT THE GOODS DESCRIBED ARE FIT FOR A PARTICULAR PURPOSE OF CUSTOMER or that their use does not conflict with any existing patent rights. The exclusive source of any warranty and of any other customer rights whatsoever is the written acknowledgment of a customer's order.

M&T™

*Trademark of M&T Chemicals Inc
†Patent applied for

Make-Up and Maintenance

Fumetrol 101 is packaged conveniently in one gallon plastic bottles packed four to a case. It must be shaken thoroughly before use. If it is added to solutions containing surfactants, it will be completely ineffective.

The amount of Fumetrol 101 to use is a function of the surface area of the plating bath. Normally, one gallon is used for each 20 square feet of surface (2 liters per square meter). Usually this amount will be effective for 24 hours. Replenishment is based on visual observation and will vary from one plant to another. In general, when fumes or spray are evident, sufficient Fumetrol 101 should be added to eliminate them. A suggested addition would be a quarter charge. 500 ml./sq. meter (1 qt./20 sq. ft.).

When air-agitation is used, it is recommended that it be designed to minimize solution movement between the anode and cathode. This will allow the Fumetrol to function more efficiently.

For reasons of economy **a good amount of freeboard should be used.** This will minimize loss of chromic acid and Fumetrol 101 through the fume hoods.

Safety And Industrial Hygiene

Fumetrol 101 may be irritating upon exposure to the eyes and skin. It is advisable to avoid contact with the eyes and prolonged or repeated contact with skin and clothing. Chemical safety goggles and rubber gloves are recommended when handling this product.

Suggested First Aid

In the event of eye contact, immediately flush eyes thoroughly with water for 15 minutes and consult a physician. For skin contact, remove contaminated clothing and flush skin thoroughly with soap and water. Launder contaminated clothing before re-use.

NOTE: "Material Safety Data Sheet" on this product is available on request from the Safety and Environmental Affairs Department of M&T Chemicals Inc., Rahway, N.J. 07065.

More Technical Information Available

Ask your M&T representative or distributor for helpful information about complete M&T processes, chemicals, and anodes for plating, cleaning, or conversion coating of metallic or plastic substrates.

Copper: M&T offers processes and supplies for decorative acid copper, acid copper for printed circuit boards, pyrophosphate copper, and cyanide copper plating.
Nickel: The M&T line includes high performance nickel; specification quality plating bright, semi-bright, and zinc tolerant nickels; sulfamate and fluoborate nickels.
Nickel-Iron: Available from M&T are bright plating processes with a range of alloy compositions for rack or barrel plating.
Chromium: Specialized M&T processes available for rack or barrel plating, decorative or hard deposits. Wide choice of features such as high speed; self-regulation; high throw; microcracked, macrocracked, or crack-free; and automatic fume control.
Zinc: M&T developments include cyanide (low, medium or high) zinc systems; alkaline noncyanide zinc, and pyrophosphate zinc. Also chromate conversion coatings.
Tin: Processes include acid tins for rack and barrel plating; sodium stannate and high speed potassium stannate processes; alkaline tin sol; stannate preplate processes for aluminum.
Other Metals: Bronze, cadmium, or cobalt processes, chemicals, anodes.
Cleaners: Anodic and cathodic electrocleaners, soak cleaners, acid salts, cleaner supplements.
Chromate Treating: Dip compounds for conversion coating of zinc, cadmium or copper. Produce clear, blue, silvery, iridescent yellow, or black finishes.

Sales Offices:

7343 Paramount Blvd., Pico Rivera, CA 90660 (213) 723-0991
708 Thomas Drive, Bensenville, IL 60106 (312) 860-2260
21056 Bridge St., Southfield, MI 48034 (313) 353-2820
631 Chestnut St., S.W. Grand Rapids, MI 49502 (616) 459-8191
1000 Executive Parkway Dr., Suite 231, St. Louis, MO 63141 (314) 878-0856
Woodbridge Rd., Rahway, NJ 07065 (201) 499-0200
4301 Simonton Rd., Dallas, TX 75240 (214) 233-7795
M&T Chemicals Ltd., 670 Strathearne Ave. N., Hamilton, Ontario L8H 7N7 (416) 547-1471

M&T™
CHEMICALS INC.
GENERAL OFFICES, RAHWAY NEW JERSEY 07065

© 1984 M&T Chemicals Inc. All Rights Reserved

SDV

APPENDIX "F"

SAMPLE CALCULATIONS

EPA AIR SAMPLING EQUATIONS

1. Dry Gas Volume at STP ($V_{m_{(std)}}$)

$$V_{m_{(std)}} = 17.64\ V_m Y \left[\frac{P_{bar}\left(\frac{\Delta H}{13.6}\right)}{T_m} \right]$$

Where

$V_{m_{(std)}}$ = ft^3 corrected for standard temperature and pressure;

V_m = ft^3 as measured by the gas meter - not corrected for standard temperature and pressure;

Y = dry gas meter calibration factor (deminsionless)

P_{bar} = inches of Hg

ΔH = inches of H_2O

T_m = °R (°F + 460)

2. Concentration as grains/dscf

$$\text{grains/dscf} = \frac{mg\ (1.543 \times 10^{-2})}{V_{m(std)}}$$

Where

$V_{m(std)}$ = ft^3 corrected for standard temperature and pressure

Conversions:

$\frac{\mu g}{1000}$ = mg; mg x 1.543×10^{-2} grains/mg = grains

3. Concentration as mg/m^3

$$mg/m^3 = \frac{0.035314(ug)}{V_{m(std)}}$$

Where

$V_{m(std)}$ = ft^3 corrected for standard temperature and pressure

4. Molecular Weight of Stack Gas, Dry Basis (M_d)

a) $M_d = 0.440\ (\%CO_2) + 0.320\ (\%\ O_2) + 0.28\ (\%\ N_2 + \%CO)$

b) $\%N_2 = 100 - \%CO_2 - \%\ O_2$

Where

$\%\ CO_2 = 0.7$

$\%\ O_2 = 21$

$\%\ CO = 0$

5. Volume of Water Vapor $(V_{w_{(std)}})$

$$V_{w_{(std)}} = 0.04707 ft^3/ml(V_{lc})$$

Where

$V_{w_{(std)}}$ = *ft^3 corrected for standard temp and pressure;*

V_{lc} = *ml of liquid collected in impingers and silica gel*

6. Moisture Content as a Percent (B_{ws})

$$B_{ws} = (V_{w_{(std)}} \,/\, V_{m_{(std)}} + V_{w_{(std)}}) \times 100$$

Where

B_{ws} = *percent,*

$V_{w_{(std)}}$ = *ft^3;*

$V_{m_{(std)}}$ = *ft^3*

7. Molecular Weight of Stack Gas, Wet Basis (M_s)

a) $M_s = M_d (1-B_{ws}) + 18.0 (B_{ws})$

Where

M_s = lb/lb-mole;

M_d = lb/lb-mole;

B_{ws} = dimensionless

b) Mole Fraction of Dry Gas (M_d)

$M_d = 100 - B_{ws}/100$

Where

M_d = dimensionless;

B_{ws} = dimensionless

8. Average Stack Gas Velocity (V_s)

$$V_s = K_p\, C_p \left(\sqrt{\Delta_p}\right)_{(avg)} \left(\frac{\sqrt{T_{s_{(avg)}}}}{P_s M_s}\right)$$

Where

$$K_p = 85.49\ ft/\sec \left[\frac{(lb/lb\text{-}mole)(in.\ Hg)}{(^\circ R)(in.H_2O)}\right]^{1/2}$$

V_s = ft/sec;

C_p = dimensionless;

Δp = inches of H_2O;

T_s = °R (°F + 460);

P_s = inches of Hg;

M_s = lb/lb-mole

9. Actual Cubic Feet Per Minute (ACFM)

ACFM = V_s (60 sec/min) (A)

Where

V_s = ft/sec;

A = ft^2

10. Average Stack Gas Dry Volumetric Flow Rate (Q_{std})

$$Q_{std} = 60\ (1-B_{ws})V_s\ A\ \frac{T_{std}}{T_{s_{(avg)}}}\ \frac{P_s}{P_{std}}$$

Where

$Q_{std} = ft^3/\text{min};$

B_{ws} = *dimensionless*;

$V_s = ft/\text{sec};$

$A = ft^2$

$T_{std} = {}^\circ R({}^\circ F + 460);$

$T_{s_{(avg)}} = {}^\circ R({}^\circ F + 460);$

P_s = *inches of Hg*;

P_{std} = *inches of Hg*

11. Emission Rate in Pounds Per Hour (lbs/hr)

lbs/hr= (Kg/hr)(2.2046)

12. Emission Rate in Kilograms per hour (Kg/hr)

$$kg/hr = (dscfm)_{STACK}\left(\frac{mg}{dscm}\right)(1.699 \times 10^{-6})$$

13. Percent Isokinetic Variation (% I)

$$I = 0.09450\ T_s\ V_{m_{(std)}} / P_s\ V_s\ A_n\ \theta\ (1-B_{ws})$$

Where

I = Percent of isokinetic sampling;

$T_s = {}^\circ R$;

$V_{m_{(std)}} = ft^3$ corrected for standard temperature and pressure;

P_s = inches of Hg;

V_s = ft/sec;

$A_n = ft^2$;

θ = minute;

B_{ws} = dimensionless

14. Concentration as lbs/dscf

$$lbs/dscf = \frac{mg(2.2\ x\ 10^{-6})}{V_{m_{(std)}}}$$

Where

$V_{m_{(std)}} = ft^3$ *corrected for standard temperature and pressure*

Conversion: $mg(2.2x10^{-6} lbs/mg) = lbs$

APPENDIX "G"

DRAFT METHOD - DETERMINATION OF HEXAVALENT CHROMIUM EMISSIONS FROM DECORATIVE AND HARD CHROME ELECTROPLATING

Method __ - Determination of Hexavalent Chromium Emissions from Decorative and Hard Chrome Electroplating

1. Applicability and Principle

1.1 Applicability. This method applies to the determination of hexavalent chromium (Cr^{+6}) in emissions from decorative and hard chrome electroplating operations.

1.2 Principle. Emissions are collected from the source by use of Method 5 (Appendix A, 40 CFR Part 60), with the filter omitted. The first and second impingers are charged with 0.1N sodium hydroxide. The collected samples remain in an alkaline solution until analysis, and are analyzed for Cr^{+6} by the diphenylcarbazide colorimetric method.

2. Range, Sensitivity, Precision, and Interferences

2.1 Range. A straight line response curve can be obtained in the range 5 μg Cr^{+6}/100 ml to 100 μg Cr^{+6}/100 ml. For a minimum analytical accuracy of ±10 percent, the lower limit of the range is 10 μg/100 ml. The upper limit can be extended by appropriate dilution.

2.2 Sensitivity. A minimum detection limit of 1 μg Cr^{+6}/100 ml has been observed.

2.3 Precision. To be determined.

2.4 Interference. Molybdenum, mercury and vanadium react with diphenylcarbazide to form a color; however, approximately 20 mg of these elements can be present in a sample without creating a problem. Iron produces a yellow color, but this effect is not measured photometrically at 540 nm.

3. Apparatus

3.1 Sampling Train. Same as Method 5, Section 2.1, but omit filter, and use quartz probe tip in place of stainless steel.

3.2 Sample Recovery. Same as Method 5, Section 2.2, but use 0.1N NaOH in place of acetone.

3.3 Analysis. The following equipment is needed.

3.3.1 Beakers. Borosilicate, 250-ml, with watchglass covers.

3.3.2 Volumetric Flasks. 100-ml and other appropriate volumes.

3.3.3 Pipettes. Assorted sizes, as needed.

3.3.4 Spectrophotometer. To measure absorbance at 540 nm.

4. Reagents

Unless otherwise indicated, all reagents shall conform to the specifications established by the Committee on Analytical Reagents of the American Chemical Society. Where such specifications are not available, use the best available grade.

4.1 Sampling.

4.1.1 0.1N NaOH.

4.2 Sample Recovery.

4.2.2 0.1N NaOH.

4.3 Analysis. The following reagents are required.

4.3.1 Water. Deionized distilled, meeting American Society for Testing and Materials (ASTM) specifications for type 2 reagent - ASTM Test Method D 1193-77 (incorporated by reference - see § 61.18).

4.3.2 Potassium Dichromate Stock Solution. Dissolve 141.4 mg of analytical reagent grade $K_2Cr_2O_7$ in water, and dilute to 1 liter (1 ml = 50 μg Cr^{+6}).

4.3.3 Potassium Dichromate Standard Solution. Dilute 10.00 ml $K_2Cr_2O_7$ stock solution to 100 ml (1 ml = 5 μg Cr^{+6}) with water.

4.3.4 Sulfuric Acid, 10 Percent (v/v). Dilute 10 ml H_2SO_4 to 100 ml in water.

4.3.5 Diphenylcarbazide Solution. Dissolve 250 mg of 1, 5-diphenylcarbizide in 50 ml acetone. Store in a brown bottle. Discard when the solution becomes discolored.

5. Procedure

5.1 Sampling. Same as Method 5, Section 4.1, except omit the filter and filter holder, and place 100 ml of 0.1N NaOH in each of the first two impingers.

5.2 Sample Recovery. Measure the volume and place all liquid in the first, second, and third impingers in a labelled sample container (Container Number 1). Use 200 ml of 0.1N NaOH to rinse the probe, three impingers, and connecting glassware. Place this wash in the same container. Place the silica gel from the fourth impinger in Container Number 3.

5.3 Preservation. Analyze all samples within _____ of collection.

5.4 Reagent Blank Preparation. Place 400 ml of 0.1N NaOH in a labelled sample container (Container Number 2).

5.5 Silica Gel Weighing. Weigh the spent silica gel (Container Number 3) or silica gel plus impinger to the nearest 0.5 g using a balance. This step may be conducted in the field.

5.6 Analysis.

5.6.1 Color Development and Measurement. After stirring the sample in Container Number 1, transfer a 50-ml or smaller measured aliquot to a 100 ml volumetric flask and add sufficient water to bring the volume to approximately

80 ml. Adjust the pH to 2 ± 0.5 with 10 percent H_2SO_4, add 2.0 ml of diphenylcarbazide solution, and dilute to volume with water. Allow the solution to stand about 10 minutes for color development. For each set of samples analyzed, treat an identical aliquot of reagent blank solution from Container Number 2 in the same way. Transfer a portion of the sample to a 1-cm absorption cell, and measure the absorbance at the optimum wavelength (Section 6.2.1). Measure and subtract the reagent blank absorbance reading, if any, to obtain a net reading. If the absorbance of the sample exceeds the absorbance of the 100 μg Cr^{+6} standard as determined in Section 6.2.2, dilute the sample and the reagent blank with equal volumes of water.

5.6.2 Check for Matrix Effects on the Cr^{+6} Results. Since the analysis for Cr^{+6} by colorimetry is sensitive to the chemical composition of the sample (matrix effects), the analyst shall check at least one sample from each source using the method of additions as follows:

Obtain two equal volume aliquots of the same sample solution. The aliquots should each contain between 30 and 50 μg of Cr^{+6}. Now treat both the spiked and unspiked sample aliquots as described in Section 5.6.1.

Next, calculate the Cr^{+6} mass C_s, in μg in the aliquot of the unspiked sample solution by using the following equation:

$$C_s = C_a \frac{A_s}{A_t - A_s} \qquad \text{Eq. -1}$$

where:

C_a = Cr^{+6} in the standard solution, μg.
A_s = Absorbance of the unspiked sample solution.
A_t = Absorbance of the spiked sample solution.

Volume corrections will not be required since the solutions as analyzed have been made to the same final volume. If the results of the method of

4.3.3 Potassium Dichromate Standard Solution. Dilute 10.00 ml $K_2Cr_2O_7$ stock solution to 100 ml (1 ml = 5 μg Cr^{+6}) with water.

4.3.4 Sulfuric Acid, 10 Percent (v/v). Dilute 10 ml H_2SO_4 to 100 ml in water.

4.3.5 Diphenylcarbazide Solution. Dissolve 250 mg of 1, 5-diphenylcarbizide in 50 ml acetone. Store in a brown bottle. Discard when the solution becomes discolored.

5. Procedure

5.1 Sampling. Same as Method 5, Section 4.1, except omit the filter and filter holder, and place 100 ml of 0.1N NaOH in each of the first two impingers.

5.2 Sample Recovery. Measure the volume and place all liquid in the first, second, and third impingers in a labelled sample container (Container Number 1). Use 200 ml of 0.1N NaOH to rinse the probe, three impingers, and connecting glassware. Place this wash in the same container. Place the silica gel from the fourth impinger in Container Number 3.

5.3 Preservation. Analyze all samples within _____ of collection.

5.4 Reagent Blank Preparation. Place 400 ml of 0.1N NaOH in a labelled sample container (Container Number 2).

5.5 Silica Gel Weighing. Weigh the spent silica gel (Container Number 3) or silica gel plus impinger to the nearest 0.5 g using a balance. This step may be conducted in the field.

5.6 Analysis.

5.6.1 Color Development and Measurement. After stirring the sample in Container Number 1, transfer a 50-ml or smaller measured aliquot to a 100 ml volumetric flask and add sufficient water to bring the volume to approximately

additions procedure used on the single source sample do not agree to within 10 percent of the value obtained by the routine spectrophotometric analysis, then reanalyze all samples from the source using this method of additions procedure.

6. Calibration

6.1 Sampling Train. Perform all of the calibrations described in Method 5, Section 5.

6.2 Spectrophotometer Calibration.

6.2.1 Optimum Wavelength Determination. Calibrate the wavelength scale of the spectrophotometer every 6 months. The calibration may be accomplished by using an energy source with an intense line emission such as a mercury lamp, or by using a series of glass filters spanning the measuring range of the spectrophotometer. Calibration materials are available commercially and from the National Bureau of Standards. Specific details on the use of such materials are normally supplied by the vendor; general information about calibration techniques can be obtained from general reference books on analytical chemistry. The wavelength scale of the spectrophotometer shall read correctly with ±5 nm at all calibration points; otherwise, repair and recalibrate the spectrophotometer. Once the wavelength scale of the spectrophotometer is in proper calibration, use 540 nm as the optimum wavelength for the measurement of the absorbance of the standards and samples.

Alternatively, a scanning procedure may be employed to determine the proper measuring wavelength. If the instrument is a double-beam spectrophotometer, scan the spectrum between 530 and 550 nm using the 50 μg Cr^{+6} standard solution (Section 4.3.4) in the sample cell and a blank solution in the reference cell. If a peak does not occur, the spectrophotometer is

malfunctioning. When a peak is obtained within the 530 to 550 nm range, record and use the wavelength at which this peak occurs as the optimum wavelength for the measurement of absorbance of both the standards and the samples. For single-beam spectrophotometer, follow the scanning procedure described above, except scan the blank and standard solutions separately. For this instrument, the optimum wavelength is the wavelength at which the maximum difference in absorbance between the standard and the blank occurs.

6.2.2 Spectrophotometer Calibration. Alternative calibration procedures are allowed, provided acceptable accuracy and precision can be demonstrated. Add 0.0 ml, 1 ml, 2 ml, 5 ml, 10 ml, 15 ml, and 20 ml of the working standard solution (1 ml = 5 μg Cr^{+6}) to a series of seven 100-ml volumetric flasks. Dilute each to mark with water. Analyze these calibration standards as in Section 5.6.1. Repeat this calibration procedure on each day that samples are analyzed. Calculate the spectrophotometer calibration factor K_c as follows:

$$K_c = 5\,\frac{A_1 + 2A_2 + 5A_3 + 10A_4 + 15A_5 + 20A_6}{A_1^2 + A_2^2 + A_3^2 + A_4^2 + A_5^2 + A_6^2} \qquad \text{Eq.-2}$$

where:

K_c = Calibration factor.

A_1 = Absorbance of the 5 μg Cr^{+6}/100 ml standard.

A_2 = Absorbance of the 10 μg Cr^{+6}/100 ml standard.

A_3 = Absorbance of the 25 μg Cr^{+6}/100 ml standard.

A_4 = Absorbance of the 50 μg Cr^{+6}/100 ml standard.

A_5 = Absorbance of the 75 μg Cr^{+6}/100 ml standard.

A_6 = Absorbance of the 100 μg Cr^{+6}/100 ml standard.

6.2.2.1 Spectrophotometer Calibration Quality Control. Multiply the absorbance value obtained for each standard by the K_c factor (least squares slope) to determine the distance each calibration point lies from the theoretical calibration line. These calculated concentration values shall not differ from the actual concentrations (i.e., 5, 10, 25, 50, 75, and 100 μg Cr^{+6}/100 ml) by more than __ percent for five of the six standards.

7. Emission Calculations

Carry out the calculations, retaining at least one extra decimal figure beyond that of the acquired data. Round off figures after final calculations.

7.1 Total Cr^{+6} in Sample. Calculate m, the total μg Cr^{+6} in each sample, as follows:

$$m = \frac{V_{s1} K_c AF}{V_a} \qquad \text{Eq. -3}$$

where:

V_{s1} = Volume in ml of total sample.

A = Absorbance of sample.

F = Dilution factor (required only if sample dilution was needed to to reduce the absorbance into the range of calibration).

V_a = Volume in ml of aliquot analyzed.

7.2 Average Dry Gas Meter Temperature and Average Orifice Pressure Drop. Same as Method 5, Section 6.2.

7.3 Dry Gas Volume, Volume of Water Vapor, Moisture Content. Same as Method 5, Sections 6.3, 6.4, and 6.5, respectively.

7.4 Cr^{+6} Emission Concentration. Calculate c_s (g/dscm), the Cr^{+6} concentration in the stack gas, dry basis, corrected to standard conditions, as follows:

$$c_s = (10^{-6}\ g/\mu g)[m/V_{m(std)}] \qquad \text{Eq. -4}$$

7.5 Isokinetic Variation, Acceptable Results. Same as Method 5, Sections 6.11 and 6.12, respectively.

8. Bibliography

8.1 Test Methods for Evaluating Solid Waste. U.S. Environmental Protection Agency. SW-846, 2nd Edition. July 1982.

8.2 Cox, X.B., R.W. Linton, and F.E. Butler. Determination of Chromium Speciation in Environmental Particles - A Multitechnique Study of Ferrochrome Smelter Dust. Accepted for publication in Environmental Science and Technology.

8.3 Same as in Bibliography of Method 5, Citations 2 to 5 and 7.

APPENDIX "H"

DETERMINATION OF TOTAL CHROMIUM AND HEXAVALENT CHROMIUM EMISSIONS FROM STATIONARY SOURCES (CARB 425)

State of California
Air Resources Board

Method 425

Determination of Total Chromium and Hexavalent Chromium Emissions from Stationary Sources

Adopted: January 22, 1987

Amended: September 12, 1990

TABLE OF CONTENTS

METHOD 425
DETERMINATION OF TOTAL CHROMIUM AND HEXAVALENT CHROMIUM EMISSIONS FROM STATIONARY SOURCES

		page
1	APPLICABILITY, PRINCIPLE, AND FIGURES	1
2	RANGE, SENSITIVITY, PRECISION, AND INTERFERENCES	5
3	APPARATUS	7
4	REAGENTS	8
5	SAMPLE COLLECTION, PRESERVATION, AND HANDLING	11
6	PROCEDURES FOR SAMPLE RECOVERY, PREPARATION, AND ANALYSIS	12
7	CALIBRATION, QUALITY CONTROL, AND DATA REPORTING	15
8	REFERENCES	19

METHOD 425

DETERMINATION OF TOTAL CHROMIUM AND HEXAVALENT CHROMIUM EMISSIONS FROM STATIONARY SOURCES

1 APPLICABILITY, PRINCIPLE, AND FIGURES

1. 1 APPLICABILITY

This method applies to the determination of hexavalent chromium (Cr(VI)) and total chromium emissions from stationary sources. Applicability has been demonstrated for the metal finishing and glass industries. Its applicability has not been demonstrated for sources with high particulate mass emission rates.

1. 2 PRINCIPLE

Particulate emissions are collected from the source in an alkaline medium by use of CARB Method 5, with modifications noted in this method. The components of the collected sample are each divided into two equal portions with one portion of each component used for total chromium analysis and the other portion used for hexavalent chromium analysis.

1. 2. 1 Hexavalent Chromium Analysis

For the hexavalent chromium analysis the collected sample component portions are extracted in an alkaline solution and analyzed by the diphenylcarbazide colorimetric method.

1. 2. 2 Total Chromium Analysis

For the total chromium analysis the collected samples must be prepared in order to convert organic forms of chromium to inorganic forms, to minimize organic interferences, and to convert the sample to a suitable solution for analysis. Samples are then subjected to an acid digestion procedure. Following the appropriate dissolution and dilution of the sample, a representative aliquot is placed manually or by means of an automatic sampler into a graphite tube furnace. The sample aliquot is then slowly evaporated to dryness, charred (ashed), and atomized. The absorption of hollow cathode radiation during atomization will be proportional to the chromium concentration.

1. 3 FIGURES

The following figures summarize features of this method.

1. 3. 1 Figure 1.

Sample Collection and Recovery for Hexavalent and Total Chromium

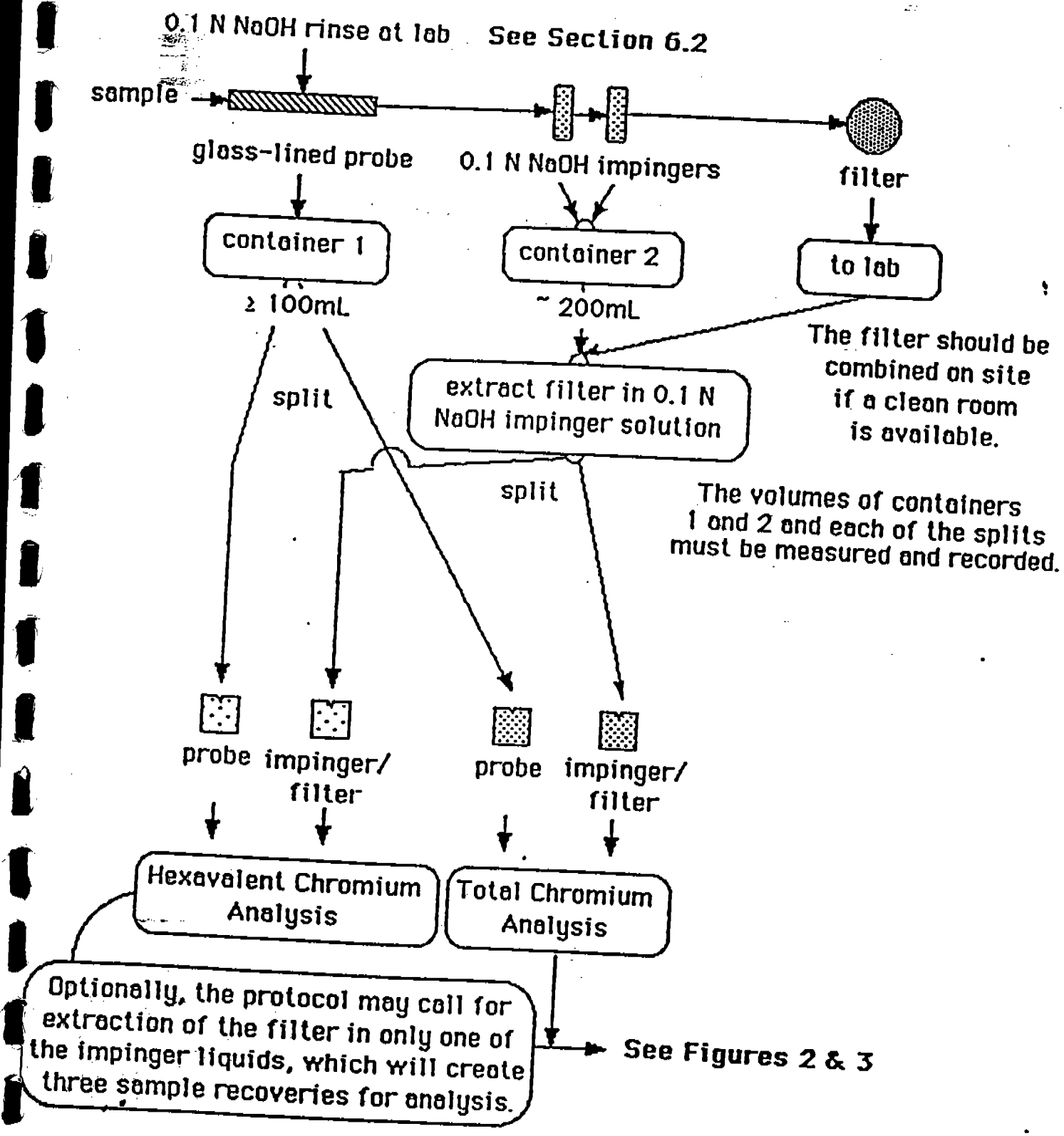

1. 3. 2 Figure 2.

Hexavalent Chromium Analysis

optionally, the protocol may call for extraction of the filter in only one of the impinger liquids, which will create three sample recoveries for analysis

See Figure 1 and Sections 6.4 and 6.5

typically:
two separate analyses

transfer ~ 35 mL to a 100mL beaker

adjust the pH to 1±0.2 with 6N sulfuric acid and add 1.0 mL of diphenylcarbazide solution

bring to volume in a 50 mL volumetric flask

dilute to volume with water - let color develop 10 minutes

filter to remove suspended solids after pre-wetting medium retention filter paper with a few mL each of first reagent blank and then sample

measure absorbance of a sample portion and reagent blank at 540 nm

if reading exceeds calibration, dilute with reagent blank or remeasure using less of remaining sample

1. 3. 3 Figure 3.

Total Chromium Analysis

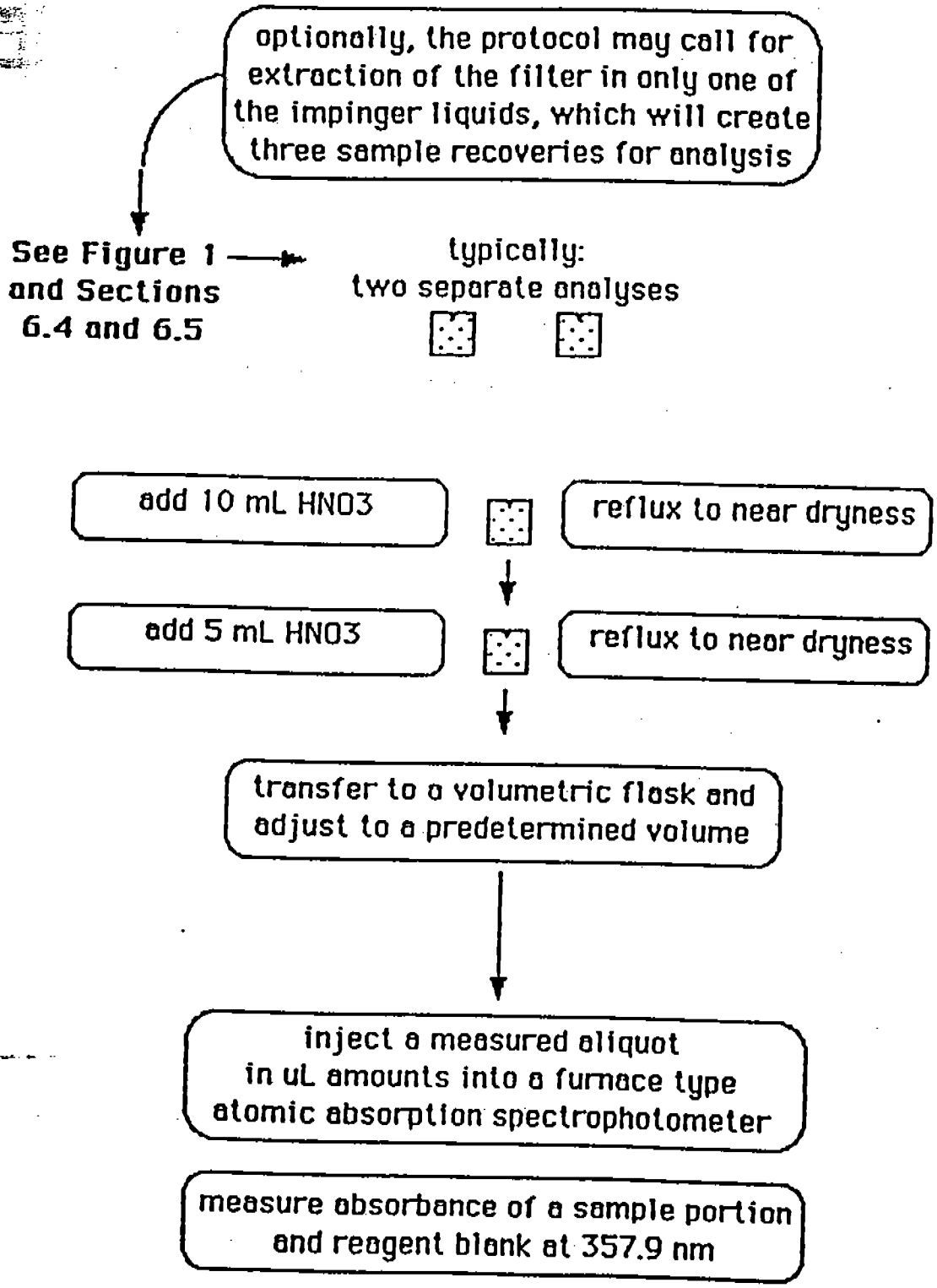

2 RANGE, SENSITIVITY, PRECISION, AND INTERFERENCES

2.1 RANGE

2.1.1 Hexavalent Chromium

A straight line response curve was obtained in the range 0.5 ug Cr(VI)/50 mL to 3.0 ug Cr(VI)/50 mL. For a minimum analytical accuracy of 100 ± 10 percent, the lower limit of the range is 2 ug/100mL. The upper limit can be extended by appropriate dilution or by using a smaller cell path length after recalibration for the smaller cell. (Reference 8.3)

2.2 SENSITIVITY

The minimum sampling volume should be calculated for each test and should be based upon [1] the targeted minimum detectable concentration at the source, [2] the expected minimum detection limit achievable at the laboratory, and [3] the sampling time limitations at the source.

2.2.1 Hexavalent Chromium

A minimum detection limit, of 0.2 ug Cr(VI)/50mL using a 5 cm cell, has been observed. (Reference 8.3)

2.3 PRECISION FOR HEXAVALENT CHROMIUM

The overall precision for sample collection and analysis for Cr(VI) will be determined after data are collected from a test protocol which includes multiple simultaneous sampling techniques.

2.4 INTERFERENCES

2.4.1 Interferences of Hexavalent Chromium

Molybdenum, mercury and vanadium react with diphenylcarbazide to form a color; however, approximately 20 mg of elements can be present in a sample without creating a problem. Iron produces a yellow color, but this effect is not measured photometrically at 540 nm.

2.4.2 Interferences for Total Chromium

2.4.2.1 The long residence time and high concentrations of the atomized sample in the optical path of the graphite furnace can result in severe physical and chemical interferences. Furnace parameters must be optimized to minimize these effects. If the analyte is not completely volatilized and removed from the furnace during atomization, memory effects will occur. If this situation is detected, the tube should be cleaned by operating the furnace at higher atomization temperatures.

2. 4. 2. 2 Nitrogen should not be used as the purge gas because of a possible CN band interference.

2. 4. 2. 3 Low concentrations of calcium may cause interferences; at concentrations above 200 mg/L calcium's effect is constant. Calcium nitrate is therefore added to ensure a known constant effect. This step may be omitted if the sample is known to be free of calcium or no analytical interferences are expected.

2. 5 ALTERNATIVE METHODS

Direct Measurement of Gas Volumes through Pipes and Small Ducts

Air Resources Board Method 2A may be used, where applicable, as an alternative to pitot tube methods specified in Method 5, as referenced herein.

Hexavalent Chromium Determination by Ion Chromatography

For hexavalent chromium concentrations which are within the detection range of ion chromatography, this analytical method may be used instead of the colorimetry method specified in these pages. This option applies only to the analysis of hexavalent chromium. The remainder of the test method shall be performed as specified.

Total Chromium Determination by Flame Atomic Absorption Spectroscopy

For high total chromium concentrations which are within the detection range of flame atomic absorption spectroscopy, this analytical method may be used instead of the furnace type method specified in these pages. This option applies only to the analysis of total chromium. The remainder of the test method shall be performed as specified.

Other Methods

The Executive Officer or authorized representative may approve an alternative test method (including other techniques or conditions) for the determination of hexavalent and/or total chromium emissions from stationary sources. To approve an alternative method, the Executive Officer or authorized representative may require the submission of test data demonstrating that the alternative method is equivalent to Method 425.

3 APPARATUS

All surfaces which may come in contact with sample must be glass, Teflon, or other similarly non-metallic (stainless steel may be a source of chromium contamination) inert material. See Section 5.2.

Any other sampling apparatus which, after review by the Executive Officer, is deemed equivalent for the purposes of this test method, may be used.

3. 1 SAMPLING TRAIN

Except where otherwise noted in this method, same as CARB Method 5, Section 2.1. Exceptions include a glass nozzle, a glass lined stainless steel probe, 0.1 N NaOH in the first two impingers, a Teflon-coated glass fiber filter, and a silica gel moisture trap after the filter. As shown in Figure 1, sample flow should be through the probe first, then the impingers, and then the filter.

3. 2 SAMPLE RECOVERY

Except where otherwise noted in this method, same as CARB Method 5, Section 2.2. Also, see Section 6. 2 of this method.

3. 3 ANALYSIS

The following apparatus and materials are needed:

3. 3. 1 Analysis of Hexavalent Chromium

3. 3. 1. 1 100 mL beakers

3. 3. 1. 2 Filtration Apparatus

Vacuum unit constructed of glass, to accommodate sintered glass funnels. Medium porosity filter paper is optional. Wherever filtering is specified, centrifuging may also be performed at the analyst's option.

3. 3. 1. 3 Volumetric Flasks

100-mL and other appropriate volumes.

3. 3. 1. 4 Hot Plate

3. 3. 1. 5 Pipettes

Assorted sizes, as needed.

3. 3. 1. 6 Spectrophotometer

To measure absorbance at 540nm.

3. 3. 2 Analysis of Total Chromium

3. 3. 2. 1 Philips Beakers

Borosilicate, 125mL, with digestion covers.

3. 3. 2. 2 Chromium Hollow Cathode Lamp or Electrodeless Discharge Lamp.

3. 3. 2. 3 Graphite Furnace

Any graphite furnace device with the appropriate temperature and timing controls.

3. 3. 2. 4 Strip Chart Recorder

A recorder is recommended for furnace work so that there will be a permanent record and so that any problems with the analysis such as drift, incomplete atomization, losses during charring, changes in sensitivity, etc., can easily be recognized.

4 REAGENTS

Unless otherwise indicated, all reagents must conform to the specifications established by the Committee on Analytical Reagents of the American Chemical Society. Where such specifications are not available, use the best available grade.

4. 1 SAMPLING

Except where otherwise noted in this method, same as CARB method 5, Section 3.1, except Teflon-coated glass fiber filters are used, and 0.1 N NaOH is used in the first two impingers. See section 4.3.2 below.

4. 2 SAMPLE RECOVERY

Except where otherwise noted in this method, same as CARB Method 5, Section 3.2.

4. 3 REAGENTS FOR HEXAVALENT CHROMIUM

4. 3. 1 Type II Water

Type II water is deionized and distilled, meeting American Society for Testing and Materials (ASTM) specification for type reagent - ASTM Test Method D 1193-77. The water should be monitored for impurities.

4. 3. 2 Batch of 0.1% NaOH Solution, Analytical Reagent Grade

The same batch of 0.1N NaOH solution should be used for impinger sampling, sample recovery, preparation, extraction, and analysis. Therefore, sampling and analytical personnel should coordinate their plans so that all steps in sampling

and analysis use the same batch of solution which will be prepared fresh for each source test. Typically, dissolve 4.0 g NaOH in water in a 1 liter volumetric flask and dilute to the mark. Repeat, as necessary, so that a single batch of sufficient volume is prepared to serve all of the needs of sampling and analysis. Store the solution in a tightly capped polyethylene bottle.

4. 3. 3 Potassium Dichromate Stock Solution

Dissolve 2.829 g of analytical reagent grade potassium dichromate ($K_2Cr_2O_7$) in water, and dilute to 1 liter (1 mL = 1000 ug Cr(VI)).

4. 3. 4 Potassium Dichromate Standard Solution

Dilute 10.00 mL potassium dichromate stock solution to 100 mL (1 mL = 100 ug Cr(VI) with water.

4. 3. 5 Sulfuric Acid, 6N, Analytical Reagent Grade

Dilute 166 mL sulfuric acid to 1000 mL in water.

4. 3. 6 Diphenylcarbazide Solution, Analytical Reagent Grade

Dissolve 0.5 g of 1,5-diphenylcarbazide in 100 mL acetone. Store in a brown bottle. Discard when the solution becomes discolored.

4. 3. 7 0.1% Potassium Permanganate Solution

Analytical Reagent Grade

4. 3. 8 0.01% Potassium Permanganate Solution

Analytical Reagent Grade

4. 3. 9 Removal of Reducing Agents in the Reagents

The 0.1 N NaOH extraction solution (4.3.2) and the 6N sulfuric acid solution (4.3.5) may contain small amounts of reducing agents that can react with the hexavalent chromium. Potassium permanganate is added to these reagents in order to neutralize these reducing agents. Pipette 3 mL of the extraction solution into cuvettes A and B. Use cuvette A as a sample cell and cuvette B as a reference cell. Zero the instrument at 528 nm with both cuvettes. Wait 10 minutes. Add an adequate amount (uL) of 0.01% potassium permanganate solution (4.3.8) to cuvette A. Enough should be added so that after 10 minutes a slight change in absorbance is observed. This step may have to be repeated a number of times in order to determine the required amount of potassium permangante that is required. From the change in absorbance, calculate the amount of potassium permanganate that is needed to nuetralize the

reducing agents found in the reagents. Then pipette the proper volume of higher concentration 0.1% potassium permanganate solution (4.3.7) into the reagents. This is done by assuming that the number of milliequivalents of reducing agents in the reagents are equal to the number of milliequivalents of 0.1% potassium permanganate pipetted.

This procedure is repeated with the 6N sulfuric acid solution.

4. 4 REAGENTS FOR TOTAL CHROMIUM

4. 4. 1 ASTM Type II Water (ASTM D1193)

Refer to section 4.3.1.

4. 4. 2 Concentrated Nitric Acid

4. 4. 2. 1 Reagent preparation should use Ultrex or equivalent grade HNO_3.

4. 4. 2. 2 Glassware cleaning should use ACS reagent grade HNO_3.

4. 4. 3 Hydrogen Peroxide (30%) (Optional), Analytical Reagent Grade

4. 4. 4 Matrix Modifier

Follow manufacturer's recommendations, when interferences are suspected.

4. 4. 5 Total Chromium Standard Stock Solution (1000mg/L)

Either procure a certified aqueous standard from a supplier (Spex Industries, Alpha Products, or Fisher Scientific) and verify by comparison with a second standard, or dissolve 2.829 g of Potassium Dichromate ($K_2Cr_2O_7$, analytical reagent grade) in Type II water and dilute to 1 liter.

4. 4. 6 Total Chromium Working Standards

All total chromium preparations injected for analysis shall be prepared to contain 1.0% (v/v) HNO_3. The zero standard shall be 1.0 % (v/v) HNO_3.

5 SAMPLE COLLECTION, PRESERVATION, AND HANDLING

5. 1 SAMPLE COLLECTION

Except where otherwise indicated in this method, all samples are collected from the source by use of CARB Method 5. Exceptions include a glass nozzle, a glass lined stainless steel probe, 0.1 N NaOH in the first two impingers, and a Teflon-coated glass fiber filter. As shown in Figure 1, sample flow should be through the probe first, then the impingers, and then the filter.

5. 2 SAMPLE HANDLING AND PRESERVATION

All surfaces which may come in contact with sample must be glass, Teflon, or other similarly non-metallic (even stainless steel may be a source of chromium contamination) inert material and must be prewashed with detergents, soaked in 1:1 HNO_3 for several hours, rinsed with Type II water, and finally rinsed with 0.1 N NaOH batch solution. For awkward objects, such as long glass probes, soaking may be replaced by careful wiping.

5. 2. 1 Probes are generally the most difficult sampling apparatus to clean. Therefore, before use in sampling, to ensure that sampling equipment is clean and free of chromium contamination, apparatus which may come in contact with sample must be cleaned until a sample of final rinse for each probe has been analyzed as below the detection limit for total chromium. The procedures of Section 6 shall be followed for this contamination check.

If the specified glass probes are in short supply, the cleaning protocol required above could double the number of days necessary to complete a series of tests. Two options exist which reduce mid-course delays in a sampling effort:

5. 2. 1. 1 Another cleaning procedure may be used if it is tested and documented as achieving the objective of no detectable chromium in the last probe cleaning rinse. Testing and documentation shall include: a pre-test visit to the intended site, collection of samples from an intended test point with the highest expected concentration of chromium, trials of other cleaning procedures, and documentation of those which pass the analytical tests and are used instead of the cleaning procedures in Section 5.2.1 above.

5. 2. 1. 2 The risk of mid-course cleaning delays may be reduced by the use of a sufficient number of probes which have been pre-cleaned and contamination checked by the procedures of Sections 5.2.1 or 5.2.1.1. Extra probes should be included to allow for breakage.

6 PROCEDURES FOR SAMPLE RECOVERY, PREPARATION, AND ANALYSIS

6. 1 SILICA GEL WEIGHING

For stack gas moisture determination, weigh the spent silica gel or silica gel plus impinger to the nearest 0.5 g using a balance. This step may be conducted in the field.

6. 2 SAMPLE COLLECTION AND RECOVERY

The sample is collected using probe, impingers, and filter.

6. 2. 1 Probe

The probe is rinsed with 0.1 N NaOH. The total rinse volume should exceed 100 mL and be stored in container 1. (Measure the volume.) The probe rinse is transported to a clean room or to a site with laboratory conditions where it is split with half saved for hexavalent chromium analysis and half saved for total chromium analysis. Each sample split is ~50mL. (Measure the volumes.)

6. 2. 2 Impingers and Filter

The sampling and analytical personnel shall discuss the expected sample concentrations and the analytical limits of detection for hexavalent and total chromium. The impinger catch and filter should be handled one of two ways depending on these expectations as directed in Sections 6.2.2.1 and 6.2.2.2 below.

6. 2. 2. 1 Higher Concentrations

If it <u>is not</u> considered important to minimize the dilution of any sample component, then the contents of both impingers (~200mL total) shall be combined and stored in container 2. (Measure the volume.) As soon as possible, the filter is transported in a filter container to a site with laboratory conditions where it should be extracted in all of the impinger solution from container 2. The extraction should include shaking for a minimum of 30 minutes. The alkaline impinger medium will retard reduction of hexavalent chromium. The extract solution is split with half saved for hexavalent chromium analysis and half saved for total chromium analysis. Each sample split is ~100 mL. (Measure the volumes.)

6. 2. 2. 2 Lower Concentrations

If it <u>is</u> considered important to minimize the dilution of any sample component, then the contents of each impinger (~100mL each) may be stored in containers 2 and 3. (Measure the volumes.) The filter shall be extracted in only one of the impinger contents, whichever is suspected to have the higher concentration. The extraction shall include shaking for a minimum of 30 minutes. The contents of the first impinger are stored in container 2 and those of the second impinger in container 3. Whichever impinger contents are not used for extraction must be handled as a third sample recovery requiring separate analyses. Both sample recoveries are split as described above. Each sample split is ~50 mL. (Measure the volumes.)

6.3 REAGENT BLANK PREPARATION

Hexavalent Chromium Reagent Blank

For each preparation, transfer 35 mL of solution to a 100mL beaker, adjust the pH to 1.0 ± 0.2 with 6N sulfuric acid, add 1.0 mL of diphenylcarbazide solution, dilute to volume with water in a 50 mL volumetric flask, and let color develop for 10 minutes.

Total Chromium Reagent Blank

For total chromium, the reagent blank is simply 1 % HNO_3.

6.4 SAMPLE PREPARATION

6.4.1 Hexavalent Chromium Sample Preparation

For each preparation, transfer 35 mL of solution to a 100mL beaker, adjust the pH to 1.0 ± 0.2 with 6N sulfuric acid, add 1.0 mL of diphenylcarbazide solution, dilute to volume with water in a 50 mL volumetric flask, and let color develop for 10 minutes. (This leaves at least 15 mL of sample split for further analyses. The total volume of sample split must be known at this point.)

6.4.2 Total Chromium Sample Preparation

In a beaker, add 10ml of concentrated nitric acid to the sample aliquot taken for analysis. Cover the beaker with a digestion cover. Place the beaker on a hot plate and reflux the sample down to near dryness. Add another 5mL nitric acid to complete digestion. Reflux the sample volume down to near dryness.

Wash down the beaker walls and digestion cover with distilled water and filter the sample to remove silicates and other insoluble material that could clog the nebulizer. Filtration should be done only if there is concern that insoluble materials may clog the nebulizer. Adjust the volume to 50 mL or a predetermined value based on the expected metal concentrations. The final concentration of HNO_3 in the solution should be 1 % (v/v). The sample is now ready for analysis. The applicability of a sample preparation technique must be demonstrated by analyzing spiked samples and/or relevant standard reference materials.

6.5 ANALYSIS

6.5.1 Hexavalent Chromium Analysis

The analyst must filter the preparation for clarity at this point. Medium retention filter paper should be used. The filter paper shall be pre-wetted with a few mL of reagent blank and sample preparation. This will prime the filter so that it won't absorb color complex.

Transfer a portion of the filtered preparation into a 5 cm absorption cell.

Measure the absorbance at the optimum wavelength of 540 nm.

Subtract the sample blank absorbance reading to obtain a net reading.

If the absorbance reading of a sample preparation exceeds the calibration range, dilute with reagent blank or re-measure using less of the sample preparation. (There should be about 15mL remaining at this point. See Sections 6.2.1, 6.2.2.1, and 6.2.2.2.)

6.5.2 Check for Matrix Effects on the Cr(VI) Results

As the analysis for Cr(VI) by colorimetry is sensitive to the chemical composition of the sample (matrix effects), the analyst shall check at least one sample from each source using the following method: Obtain two equal volume aliquots of the same sample solution. The aliquots should each contain between 6 and 10 ug of Cr(VI) (less if not possible). Spike one of the aliquots with an aliquot of standard solution that contains between 6 and 10 ug of Cr(VI). Now treat both the spiked and unspiked sample aliquots as described in Section 6.4.1 above. Next, calculate the Cr(VI) mass Cs, in ug in the aliquot of the unspiked sample solution by using the following equation:

$$Cs = Ca \frac{As}{At-As} \qquad \text{Eq. 1}$$

where:

Ca = Cr(VI) in the standard solution, ug.

As = Absorbance of the unspiked sample solution.

At = Absorbance of the spiked sample solution.

Volume corrections will not be required since the solutions as analyzed have been made to the same final volume. If the results of this method used on the single source sample do not agree to within 10 percent of the value obtained by the

proper calibration, use 540 nm as the optimum wavelength for the measurement of the absorbance of the standards and samples.

7. 2. 2 Alternatively, a scanning procedure may be employed to determine the proper measuring wavelength. If the instrument is a double-beam spectrophotometer, scan the spectrum between 530 and 550 nm using a 50 ug Cr(VI) standard solution in the sample cell and a reagent blank solution in the reference cell. If a peak does not occur, the spectrophotometer is malfunctioning and should be repaired. When a peak is obtained within the 530 to 550 nm range, the wavelength at which this peak occurs shall be the optimum wavelength for the measurement of absorbance of both the standards and the samples. For a single-beam spectrophotometer, follow the scanning procedure described above, except that the reagent blank and standard solutions shall be scanned separately. The optimum wavelength shall be the wavelength at which the maximum differences in absorbance between the standard and the reagent blank occurs.

7. 2. 3 Either (1) run a series of chromium standards and construct a calibration curve by plotting the concentrations of the standards against the absorbances or (2) if necessary, for the method of standard additions, plot added concentration versus absorbance.

7. 2. 4 Each standard for hexavalent chromium is made up fresh in a separate 50mL volumetric flask starting with 35 mL of the same batch of NaOH solution reserved for its sample set. Then an appropriate amount of hexavalent chromium is added to each calibration standard, starting with none for the zero standard. Then 6N sulfuric acid and diphenylcarbazide solution are added in the same manner as in sample preparation.

7. 3 CALIBRATION AND QUALITY CONTROL FOR TOTAL CHROMIUM

7. 3. 1 Either (1) run a series of chromium standards and reagent blanks and construct a calibration curve by plotting the concentrations of the standards against the absorbances or (2) for the method of standard additions, plot added concentration versus absorbance. For instruments that read directly in concentration, set the curve corrector to read out the proper concentration.

Calibration standards for total chromium should start with 1% v/v HNO_3 with no chromium for the zero standard with appropriate increases in total chromium concentration in the other calibration standards. The calibration standards should be prepared following the steps outlined in sample preparation.

7. 3. 2 Run a check standard after approximately every 10 sample injections. Standards are run in part to monitor the life and performance of the graphite tube. Lack of reproducibility or a significant change in the signal for the standards indicates that the tube should be replaced.

7. 3. 3 Duplicates, spiked samples, and check standards should be routinely analyzed.

7. 3. 4 Calculate metal concentrations (1) by the method of standard additions, or (2) from a calibration curve, or (3) directly from the instrument's concentration readout. All dilution or concentration factors must be taken into account. Concentrations reported for multiphased or wet samples must be appropriately qualified (e.g., 5 ug/g dry weight).

7. 3. 5 Calibration curves must be composed of a minimum of a reagent blank and three total chromium standards. A calibration curve should be made for every batch of samples, unless check standards remain within 10% of the last calibration curve.

7. 3. 6 Dilute samples with reagent blank solution if they are more concentrated than the highest standard or if they fall on the plateau of a calibration curve.

7. 3. 7 Employ a minimum of one matrix-matched sample blank per sample batch to determine if contamination or any memory effects are occurring.

7. 3. 8 Test the system with check standards after approximately every 15 samples.

7. 3. 9 Run one duplicate sample for every 10 samples, providing there is enough sample for duplicate analysis. A duplicate sample is a sample brought through the whole sample preparation.

7. 3.10 Spiked samples or standard reference materials shall be used daily to ensure that correct procedures are being followed and that all equipment is operating properly. This will serve as a check on calibration standards, too.

7. 3.11 Whenever sample matrix problems are suspected, the method of standard additions shall be used for the analysis of all extracts, or whenever a new sample matrix is being analyzed.

7. 3.12 The concentration of all calibration standards should be verified against a quality control check sample obtained from an outside source.

7. 3.13 All quality control data should be maintained and available for easy reference or inspection.

7. 4 DATA REPORTING

Carry out the calculations, retaining at least one extra decimal figure beyond that of the acquired data. Round off figures after final calculations.

7. 4. 1 Total Cr(VI) in Sample

Calculate and report m_h, the total ug Cr(VI) in the sample. This can be obtained from the calibration curve or from the method of standard additions. Note that m_h is the sum of the masses of hexavalent chromium analyses performed on all sample splits. Also take in account the dilutions when calculating m_h.

Report these calculations based on net readings, but report all sample blank data, too.

7. 4. 2 Total Chromium in the Sample

Calculate and report m_t, the total ug of chromium in the sample. This can be obtained from the calibration curve or from the method of standard additions. Note that m_t is the sum of the masses of total chromium analyses performed on all sample splits. Also take into account the necessary dilutions when calculating out m_t.

Report these calculations based on net readings, but report all sample blank data, too.

7. 4. 3 Average Dry Gas Meter Temperature and Average Orifice Pressure Drop

Except where otherwise noted in this method, same as Method 5, Section 6.2.

7. 4. 4 Dry Gas Volume, Volume of Water Vapor, Moisture Content

Except where otherwise noted in this method, same as Method 5, Sections 6.3, 6.4, and 6.5, respectively.

7. 4. 5 Cr(VI) Emission Concentration

Calculate and report $[h]_s$ (g/dscm), the Cr(VI) concentration in the stack gas, dry basis, corrected to standard conditions, as follows:

$$[h]_s = (10^{-6} g/ug)(m_h/V_{m(std)})$$

APPENDIX "I"

LABORATORY ANALYSIS PROCEDURE METHOD OF DETERMINATION OF CrVI IN ALKALINE SOLUTION

5. Install a 50 µL sample loop on the injection valve if extracts contain high levels of Cr(VI).

6. Set the eluent flow to 1.5 mL/min and the post column reagent flow rate to 0.5 mL/min. The combined flow rate out of the detector waste is 2.0 mL/min. After the flow rates are adjusted, allow the system to equilibrate for about 30 minutes.

7. Load at least 1 mL of sample through the sample port using an appropriate syringe. Inject the sample into the eluent stream and record the chromatogram. The sample peak should elute at about 3 minutes.

   NOTE: If any precipitate in the sample is observed, an Acrodisc prefilter attached to the syringe must be used.

8. The concentration of the unknown is calculated by comparison of the peak areas for the standards and the unknown.

Quality Control

The following procedures are conducted to ensure that the analysis is in control:

(1) A calibration curve verification check sample is run immediately following the calibration. This sample must be prepared from a different manufacturer/source than that of the calibration standards.

(2) A mid-range standard must be run no less frequently than every ten (10) samples. The analysis of this sample must be within 10% of the expected value.

(3) A sample matrix spike must be analyzed to ensure that the sample matrix does not suppress/enhance the Cr(VI) signal. Recovery must be 85% - 115%. Otherwise, the method of standard additions must be performed .

(4) A duplicate injection of 10% of the samples (minimum one per batch if less than 10 samples) is analyzed. If the sample values are 2-10X the limit of detection (LOD), the duplicate % difference should be <30%. If the values are >10X the LOD, then % difference should be <15%.

(5) An analysis blank (Type II water) must be run immediately following calibration. This analysis will determine water purity and/or potential for carryover during the analysis.

APPENDIX "J"

EQUIPMENT CALIBRATION DATA

ADVANCED SYSTEMS TECHNOLOGY
Meter Box Calibrations

Console Id: AST #1 Date: March 31, 1992
Barometric Pressure: 29.80

Delta P	T	TEST METER Initial Cubic Feet	Final	Total	Temp		Dry Gas Meter Initial Cubic Feet	Final	Total	Temp	
0.5	13	510.920	515.945	5.025	80.0		354.490	359.490	4.996	80.0	79.0
					80.0					85.0	81.0
1	9	515.945	520.963	5.018	80.0		359.490	364.490	4.996	84.0	81.0
					80.0					90.0	83.0
1.5	7.8	520.963	525.985	5.022	80.0		364.490	369.490	4.996	89.0	82.0
					80.0					94.0	85.0

	MCF	%	DEL H	%
	0.9907	1.0	1.954	2.61
	0.9850	0.4	1.895	-0.46
	0.9776	-0.3	2.131	11.94
Average	0.984		1.993	

ADVANCED SYSTEMS TECHNOLOGY
Meter Box Calibrations

Console Id: AST #2 Date: March 31, 1992
Barometric Pressure: 29.80

Delta P	T	TEST METER Initial Cubic Feet	Final	Total	Temp		Dry Gas Meter Initial Cubic Feet	Final	Total	Temp	
0.5	27	458.640	464.796	6.156	75.0		834.959	840.165	5.202	76.0	77.0
					75.0					80.0	78.0
1	9.5	464.796	469.725	4.929	75.0		840.165	845.350	5.181	80.0	79.0
					75.0					84.0	79.0
2	6.5	469.725	475.115	5.390	75.0		845.350	850.350	4.996	83.0	80.0
					75.0					86.0	81.0

	MCF	%	DEL H	%
	0.8396	-14.1	7.461	291.86
	1.0378	6.1	1.953	2.58
	0.9096	-7.0	1.981	4.05
Average	0.929		3.798	
Correct	0.978		1.904	
error %	-5.0		99.5	

ation weather 762-1186

ADVANCED SYSTEMS TECHNOLOGY
Meter Box Calibrations

Console Id: AST #3 Date: March 31, 1992
Barometric Pressure: 29.80

Delta P	T	TEST METER Initial Cubic Feet	Final	Total	Temp		Dry Gas Meter Initial Cubic Feet	Final	Total	Temp	
0.5	13	485.385	490.444	5.059	75.0		533.993	538.993	4.996	78.0	78.0
					75.0					82.0	80.0
1	9.5	490.444	495.632	5.188	75.0		538.993	543.995	4.998	81.0	80.0
					75.0					86.0	81.0
2	6.5	495.632	500.720	5.088	75.0		543.995	548.995	4.996	84.0	81.0
					75.0					88.0	82.0

	MCF	%	DEL H	%
	0.9781	-0.2	1.959	2.90
	0.9486	-3.2	2.110	10.83
	0.9614	-1.9	1.990	4.53
Average	0.963		2.020	
Correct	0.980		1.904	
error %	-1.8		6.1	

nation weather 762-1186

TEMPERATURE SENSOR CALIBRATION

Date: Nov. 15, 1991

Ambient Temperature: 76 Baro. Presure: 30.01

Calibrator: J. Parker Reference: Hg. in glass 0 - 110 C

Location	Source	Reference (C)	Reference (F)	Thermocouple (F)	Difference
Consule #1					
Meter Box IN	Ambient	0.0	76.0	74.1	-0.35%
	Cold	0.0	32.0	32.5	0.10%
	Hot	0.0	250.0	243.0	-0.99%
Meter Box OUT	Ambient	0.0	76.0	74.5	-0.28%
	Cold	0.0	32.0	32.3	0.06%
	Hot	0.0	250.0	247.0	-0.42%
Consule #2					
Meter Box IN	Ambient	0.0	76.0	73.9	-0.39%
	Cold	0.0	32.0	32.6	0.12%
	Hot	0.0	250.0	236.0	-1.97%
Meter Box OUT	Ambient	0.0	76.0	74.3	-0.32%
	Cold	0.0	32.0	32.6	0.12%
	Hot	0.0	250.0	235.0	-2.11%
Consule #3					
Meter Box IN	Ambient	0.0	76.0	73.7	-0.43%
	Cold	0.0	32.0	32.4	0.08%
	Hot	0.0	250.0	223.0	-3.80%
Meter Box OUT	Ambient	0.0	76.0	72.3	-0.69%
	Cold	0.0	32.0	32.6	0.12%
	Hot	0.0	250.0	249.0	-0.14%
Impinger A Case 1	Ambient	0.0	76.0	74.3	-0.32%
	Cold	0.0	32.0	32.5	0.10%
	Hot	0.0	250.0	237.0	-1.83%
Impinger B Case 2	Ambient	0.0	76.0	76.1	0.02%
	Cold	0.0	32.0	32.3	0.06%
	Hot	0.0	250.0	237.0	-1.83%
Hot Box 1	Ambient	0.0	76.0	74.1	-0.35%
	Cold	0.0	32.0	32.5	0.10%
	Hot	0.0	250.0	247.0	-0.42%
Hot Box 2	Ambient	0.0	76.0	75.1	-0.17%
	Cold	0.0	32.0	32.6	0.12%
	Hot	0.0	250.0	246.0	-0.56%

TEMPERATURE SENSOR CALIBRATION

Date: Nov. 15, 1991 Probe Calibrations

Ambient Temperature: 76 Baro. Presure: 30.0

Calibrator: T. Yaroch Reference: Hg. in glass 0 - 110 C

Location	Source	Reference (C)	Reference (F)	Thermocouple (F)	Difference
Stack Gas	Ambient	0.0	76.0	72.6	-0.63%
3 Ft.	Cold	0.0	32.0	31.9	-0.02%
#D	Hot	0.0	250.0	249.0	-0.14%
Stack Gas	Ambient	0.0	76.0	74.5	-0.28%
4 Ft.	Cold	0.0	32.0	31.6	-0.08%
#C	Hot	0.0	250.0	252.0	0.28%
Stack Gas	Ambient	0.0	76.0	72.8	-0.60%
4 Ft.	Cold	0.0	32.0	31.5	-0.10%
#F	Hot	0.0	250.0	229.0	-2.96%
Stack Gas	Ambient	0.0	76.0	72.9	-0.58%
5 Ft.	Cold	0.0	32.0	31.5	-0.10%
#E	Hot	0.0	250.0	249.0	-0.14%
Stack Gas	Ambient	0.0	76.0	72.0	-0.75%
5 Ft.	Cold	0.0	32.0	32.1	0.02%
#I	Hot	0.0	250.0	236.0	-1.97%
Stack Gas	Ambient	0.0	76.0	72.0	-0.75%
6 Ft.	Cold	0.0	32.0	31.7	-0.06%
#H	Hot	0.0	250.0	234.0	-2.25%
Stack Gas	Ambient	0.0	76.0	71.6	-0.82%
10 Ft.	Cold	1.2	32.0	32.2	0.04%
#G	Hot	0.0	250.0	267.0	2.39%
	Ambient	0.0	76.0	74.2	-0.34%
	Cold	0.0	32.0	36.4	0.89%
	Hot	0.0	250.0	260.0	1.41%
	Ambient	0.0	32.0	32.0	0.00%
	Cold	0.0	32.0	32.0	0.00%
	Hot	0.0	32.0	32.0	0.00%
	Ambient	0.0	32.0	32.0	0.00%
	Cold	0.0	32.0	32.0	0.00%
	Hot	0.0	32.0	32.0	0.00%

ADVANCED SYSTEMS TECHNOLOGY
Meter Box Calibrations

Console Id: AST #1 Date: January 21, 1992
Barometric Pressure: 30.16

Delta P	T	TEST METER Initial Cubic Feet	Final	Total	Temp		Dry Gas Meter Initial Cubic Feet	Final	Total	Temp		
0.5	13	421.633	426.610	4.977	80.0		327.668	332.669	4.997	80.0	78.0	
					80.0					85.0	80.0	
1	9	426.610	431.670	5.060	80.0		332.669	337.741	5.068	84.0	80.0	
					80.0					90.0	82.0	
1.5	7.7	431.670	436.990	5.320	80.0		337.741	342.990	5.245	89.0	82.0	
					80.0					93.0	84.0	

	MCF	%	DEL H	%
	1.0014	2.1	1.926	1.16
	0.9918	1.1	1.817	-4.59
	0.9697	-1.2	1.907	0.18
Average	0.988		1.883	
Correct	0.981		1.904	
error %	0.7		-1.1	

ADVANCED SYSTEMS TECHNOLOGY
Meter Box Calibrations

Console Id: AST #2 Date: January 16, 1992
Barometric Pressure: 30.27

Delta P	T	TEST METER Initial Cubic Feet	Final	Total	Temp		Dry Gas Meter Initial Cubic Feet	Final	Total	Temp	
0.5	26.	366.975	377.100	10.125	75.0		92.255	102.316	10.053	75.0	75.0
					75.0					79.0	77.0
1	9.5	377.100	382.200	5.100	75.0		102.316	107.489	5.169	78.0	77.0
					75.0					81.0	78.0
2	6.5	382.200	387.321	5.121	75.0		107.489	112.439	4.946	81.0	78.0
					75.0					83.0	78.0

	MCF	%	DEL H	%
	0.9889	1.1	1.958	2.81
	1.0045	2.7	1.917	0.71
	0.9523	-2.6	1.972	3.55
Average	0.982		1.949	
Correct	0.978		1.904	
error %	0.4		2.4	

ADVANCED SYSTEMS TECHNOLOGY
Meter Box Calibrations

Console Id: AST #3 Date: January 16, 1992
Barometric Pressure: 30.27

Delta P	T	TEST METER Initial Cubic Feet	Final	Total	Temp		Dry Gas Meter Initial Cubic Feet	Final	Total	Temp	
0.5	13	387.321	392.600	5.279		75.0	200.167	205.220	5.049	78.0	77.0
						75.0				83.0	79.0
1	9.5	392.600	397.929	5.329		75.0	205.220	210.365	5.141	82.0	79.0
						75.0				87.0	80.0
2	6.5	397.929	403.109	5.180		75.0	210.365	215.468	5.099	87.0	81.0
						75.0				89.0	82.0

	MCF	%	DEL H	%
	0.9477	-3.3	1.887	-0.90
	0.9499	-3.1	1.964	3.13
	0.9621	-1.8	1.888	-0.84
Average	0.953		1.913	
Correct	0.980		1.904	
error %	-2.7		0.5	