April 29, 1993

NOTE:

Attached is an addendum to the source test at the electroplating facility in Seattle, Washington.

Frank R. Clay

Note: This is a reference cited in *AP 42, Compilation of Air Pollutant Emission Factors, Volume I Stationary Point and Area Sources.* AP42 is located on the EPA web site at www.epa.gov/ttn/chief/ap42/

The file name refers to the reference number, the AP42 chapter and section. The file name "ref02_c01s02.pdf" would mean the reference is from AP42 chapter 1 section 2. The reference may be from a previous version of the section and no longer cited. The primary source should always be checked.

ADDENDUM FOR THE U.S. ENVIRONMENTAL PROTECTION AGENCY TEST REPORT FOR THE DECEMBER 1991 SOURCE TEST AT THE PRECISION ENGINEERING, INC. ELECTROPLATING FACILITY IN SEATTLE, WASHINGTON

At the request of Midwest Research Institute, this addendum has been prepared for the Precision Engineering Test Report. The changes are minor and correct field data and calculations found in the report.

After the first run of the source test, it was discovered that the thermocouple indicator readings used to determine inlet and outlet stack temperatures were biased about 20 degrees F too high. For the remaining runs, dial thermometers were used for stack temperature readings.

In the original version of the test report stack temperatures obtained from the thermocouple were used in the data reduction for Run 1. For this addendum, the average stack temperatures from Runs 2 and 3 are used in the reduction of the data from Run 1. Changes were made throughout Chapter 3 wherever the corrected temperatures had an effect.

This addendum is composed of two parts: (1) revisions to Chapter 3 and (2) computer print outs. The addendum for Chapter 3 contains the entire chapter and completely replaces the original Chapter 3. The new computer print outs replace the original print outs for Run 1 data from both the inlet and the outlet locations. For reports with appendices, replace both Chapter 3 and the computer print out sheets; for reports without appendices only Chapter 3 need be replaced.

PLANT- PRECISION ENGINEERING
DATE- DECEMBER 17, 1991
LOCATION-SEATTLE, WASHINGTON
RUN- 0-1 Cr VI

INITIAL DATA VALUES

DIA. OF STACK OR CROSS SECTION
30.0000 IN. OR 0.0000 L 0.0000 W IN.

CATCH
FROUNT HALF 146.0000 ug.
BACK HALF 0.0000 ug.
TOTAL 146.0000 ug.

BAROMETRIC PRESSURE Pbar: 30.01 in. Hg
Ym METER CORRECTION FACTOR: 0.9910

STACK STATIC PRESSURE Pst: 0.20 in. HOH
NET TIME OF TEST Tt: 360 min.

ESTIMATED % MOISTURE: 1.0
PITOT COEFFICIENT: 0.84

DIA. OF NOZZLE: 0.2480 in.
Vw TOTAL H2O COLLECTED: 77.00 ml

METER DELTA H@: 1.8260 in. HOH
Np # OF POINTS: 72

%CO2: 0.70
%O2: 21.00
%N2: 78.30

CALCULATED VALUES

Milligrams/Dry Std. Cubic Meter = 0.0139

Grains/Dry Std. Cubic Ft. = 6.09E-06

Lbs./Hour = 7.449E-04
Kilograms/Hour = 3.379E-04

AFCM: 14474.42
DSCFM: 14271.74

Vw gas: 3.6267 CF
Vm Std.: 370.0069 CF
STACK GAS PRESSURE Ps: 30.0247 in. HOH

TRUE % H: 0.9707
AVE. DELTA P: 0.7671 in. HOH
MWd MOL WT. OF STACK GAS: 28.9520

Md: 0.9900
AVE. DELTA H: 3.63 in. HOH
AVE. SQRT DELTA P: 20.1391

Bws(est): 0.0100
AVE. Ts: 72 F
PER CENT ISOKINETIC %I: 105.4450

Vm TOTAL: 373.8870 CF
AVE. Tm: 75 F
Vs STACK GAS VELOCITY: 49.1451 f/s

MW MOL. WT. OF STACK GAS WET= 28.8425

LEAK CHECK

GAS METER READING

	START	STOP	COMENTS
1	0.0000	0.0000	
2	0.0000	0.0000	
3	0.0000	0.0000	
4	0.0000	0.0000	
5	0.0000	0.0000	

PLANT- PRECISION ENGINEERING
DATE- DECEMBER 17, 1991
LOCATION-SEATTLE, WASHINGTON
RUN- 0-1 Total Cr

INITIAL DATA VALUES

DIA. OF STACK OR CROSS SECTION
30.0000 IN. OR 0.0000 L 0.0000 W IN.

CATCH
FROUNT HALF 137.0000 ug.
BACK HALF 0.0000 ug.
TOTAL 137.0000 ug.

BAROMETRIC PRESSURE Pbar: 30.01 in. Hg
Ym METER CORRECTION FACTOR: 0.9910
STACK STATIC PRESSURE Pst: 0.20 in. HOH
NET TIME OF TEST Tt: 360 min.
ESTIMATED % MOISTURE: 1.0
PITOT COEFFICIENT: 0.84
DIA. OF NOZZLE: 0.2480 in.
Vw TOTAL H2O COLLECTED: 77.00 ml
METER DELTA H@: 1.8260 in. HOH
Np # OF POINTS: 72

%CO2	%O2	%N2
0.70	21.00	78.30

CALCULATED VALUES

Milligrams/Dry Std. Cubic Meter = 0.0131
Grains/Dry Std. Cubic Ft. = 5.71E-06
Lbs./Hour = 6.990E-04
Kilograms/Hour = 3.171E-04

AFCM	DSCFM
14474.42	14271.74

Vw gas	Vm Std.	STACK GAS PRESSURE Ps
3.6267 CF	370.0069 CF	30.0247 in. HOH
TRUE % M	AVE. DELTA P	Msd MOL WT. OF STACK GAS
0.9707	0.7671 in. HOH	28.9520
Md	AVE. DELTA H	AVE. SQRT DELTA P
0.9900	3.63 in. HOH	20.1391
Bws(est)	AVE. Ts	PER CENT ISOKINETIC %I
0.0100	72 F	105.4450
Vm TOTAL	AVE. Tm	Vs STACK GAS VELOCITY
373.8870 CF	75 F	49.1451 f/s

MW MOL. WT. OF STACK GAS WET= 28.8425

LEAK CHECK

GAS METER READING

	START	STOP	COMMENTS
1	0.0000	0.0000	
2	0.0000	0.0000	
3	0.0000	0.0000	
4	0.0000	0.0000	
5	0.0000	0.0000	

==========
RUN DATA
==========

PLANT- PRECISION ENGINEERING
DATE- DECEMBER 17, 1991
LOCATION-SEATTLE, WASHINGTON
RUN- 0-1 Cr VI

POINT #		TIME	GAS METER READING	VELOCITY DELTA P	ORIFICE PRESSURE ACTUAL	ORIFICE PRESSURE DESIRED	STACK TEMP	DRY GAS METER TEMP. IN	DRY GAS METER TEMP. OUT	%I PER POINT	COMENTS
A	1	0.00	474.035	0.83	3.90	3.15	72	39	38	108.0	
		5.00	479.200	0.84	4.00	3.21	72	45	39	107.3	
		10.00	484.400	0.84	4.00	3.23	72	51	40	102.5	
A	2	15.00	489.400	0.82	3.90	3.17	72	56	42	113.3	
		20.00	494.900	0.83	3.90	3.23	72	60	44	105.8	
		25.00	500.100	0.82	3.90	3.21	72	63	46	105.9	
A	3	30.00	505.300	0.81	3.80	3.18	72	66	48	104.0	
		35.00	510.400	0.81	3.80	3.20	72	68	50	105.6	
		40.00	515.600	0.80	3.80	3.17	72	70	53	105.8	
A	4	45.00	520.800	0.80	3.80	3.18	72	71	54	103.6	
		50.00	525.900	0.76	3.60	3.03	72	73	57	105.7	
		55.00	531.000	0.76	3.60	3.04	72	74	58	103.4	
A	5	60.00	536.000	0.72	3.40	2.89	72	76	59	105.9	
		65.00	541.000	0.72	3.40	2.89	72	76	60	179.9	
		70.00	549.500	0.72	3.40	2.90	72	77	62	50.6	
A	6	75.00	551.900	0.68	3.20	2.75	72	78	64	82.2	
		80.00	555.700	0.66	3.10	2.67	72	78	65	105.3	
		85.00	560.500	0.66	3.10	2.67	72	80	66	100.6	
A	7	90.00	565.100	0.58	2.70	2.35	72	80	67	109.5	
		95.00	569.800	0.61	2.80	2.47	72	80	67	104.5	
		100.00	574.400	0.60	2.80	2.44	72	80	68	107.6	
A	8	105.00	579.100	0.66	3.10	2.69	72	82	69	100.2	
		110.00	583.700	0.64	3.00	2.61	72	82	70	110.4	
		115.00	588.700	0.64	3.00	2.61	72	82	71	103.7	
A	9	120.00	593.400	0.66	3.10	2.69	72	83	71	108.6	
		125.00	598.400	0.66	3.10	2.70	72	83	72	95.5	
		130.00	602.800	0.66	3.10	2.70	72	83	72	110.6	
A	10	135.00	607.900	0.69	3.20	2.82	72	84	72	101.8	
		140.00	612.700	0.65	3.08	2.66	72	85	73	115.5	
		145.00	618.000	0.65	3.08	2.68	72	85	79	86.7	
A	11	150.00	622.000	0.69	3.20	2.83	72	85	74	116.3	
		155.00	627.500	0.67	3.20	2.75	72	86	74	105.1	
		160.00	632.400	0.66	3.10	2.71	72	86	74	108.0	
A	12	165.00	637.400	0.69	3.20	2.83	72	85	75	97.2	
		170.00	642.000	0.70	3.30	2.88	72	86	75	113.2	
		175.00	647.400	0.67	3.20	2.75	72	86	75	109.5	
B	1	180.00	652.510	1.10	5.20	4.46	72	73	73	103.7	
		185.00	658.600	1.20	5.70	4.88	72	78	72	105.7	
		190.00	665.100	1.20	5.70	4.90	72	82	73	108.5	
B	2	195.00	671.800	1.10	5.20	4.50	72	84	73	109.6	
		200.00	678.300	1.00	4.74	4.10	72	86	73	107.5	
		205.00	684.400	1.00	4.74	4.11	72	86	74	96.9	

B	3	210.00	689.900	0.93	4.40	3.82	72	86	74	109.5
		215.00	695.900	0.93	4.40	3.83	72	87	75	92.9
		220.00	701.000	0.93	4.40	3.83	72	88	76	114.6
B	4	225.00	707.300	0.82	3.90	3.38	72	88	76	98.6
		230.00	712.400	0.83	3.90	3.42	72	88	76	111.5
		235.00	718.200	0.83	3.90	3.42	72	88	76	90.4
B	5	240.00	722.900	0.74	3.50	3.05	72	88	78	119.8
		245.00	728.800	0.74	3.50	3.05	72	88	77	89.4
		250.00	733.200	0.73	3.50	3.01	72	88	77	116.6
B	6	255.00	738.900	0.66	3.10	2.72	72	88	77	107.5
		260.00	743.900	0.69	3.30	2.85	72	88	78	109.3
		265.00	749.100	0.69	3.30	2.84	72	87	77	103.2
B	7	270.00	754.000	0.72	3.40	2.97	72	88	77	113.3
		275.00	759.500	0.72	3.40	2.97	72	87	77	96.9
		280.00	764.200	0.73	3.40	3.01	72	87	77	106.5
B	8	285.00	769.400	0.73	3.40	3.01	72	87	77	104.4
		290.00	774.500	0.75	3.60	3.10	72	88	78	96.8
		295.00	779.300	0.74	3.50	3.05	72	87	77	113.9
B	9	300.00	784.900	0.76	3.60	3.14	72	88	78	104.2
		305.0000	790.100	0.75	3.60	3.10	72	88	78	98.8
		310.0000	795.000	0.75	3.60	3.10	72	88	78	117.0
B	10	315.0000	800.800	0.73	3.50	3.01	72	88	78	104.2
		320.0000	805.900	0.73	3.50	3.01	72	87	78	102.3
		325.0000	810.900	0.74	3.50	3.05	72	87	77	107.8
B	11	330.0000	816.200	0.74	3.50	3.05	72	87	78	105.7
		335.0000	821.400	0.73	3.50	3.01	72	87	77	106.5
		340.0000	826.600	0.74	3.50	3.05	72	86	77	105.9
B	12	345.0000	831.800	0.78	3.70	3.21	72	86	77	105.1
		350.0000	837.100	0.80	3.80	3.29	72	86	77	105.8
		355.0000	842.500	0.81	3.80	3.34	72	86	78	105.5
		360.0000	847.922			0.00				0.0

PLANT- Precision Engineering
DATE- December 17, 1991
LOCATION-Seattle Washington
RUN- Inlet 1-1 Cr VI

INITIAL DATA VALUES

DIA. OF STACK OR CROSS SECTION
24.0000 IN. OR 0.0000 L 0.0000 W IN.

CATCH
FROUNT HALF 2889.0000 ug.
BACK HALF 0.0000 ug.
TOTAL 2889.0000 ug.

BAROMETRIC PRESSURE Pbar: 30.01 in. Hg
Ym METER CORRECTION FACTOR: 0.9780

STACK STATIC PRESSURE Pst: -5.40 in. HOH
NET TIME OF TEST Tt: 360 min.

ESTIMATED % MOISTURE: 1.0
PITOT COEFFICIENT: 0.84

DIA. OF NOZZLE: 0.2480 in.
Vw TOTAL H2O COLLECTED: 72.82 ml

METER DELTA H@: 1.8900 in. HOH
Np # OF POINTS: 73

%CO2: 0.70
%O2: 21.00
%N2: 78.30

CALCULATED VALUES

Milligrams/Dry Std. Cubic Meter = 0.2939

Grains/Dry Std. Cubic Ft. = 1.28E-04

Lbs./Hour = 1.004E-02
Kilograms/Hour = 4.555E-03

ACFM: 9344.66
DSCFM: 9121.74

Vw gas: 3.4298 CF
Vm Std.: 347.1130 CF
STACK GAS PRESSURE Ps: 29.6129 in. HOH

TRUE % M: 0.9784
AVE. DELTA P: 0.7747 in. HOH
MWd MOL WT. OF STACK GAS: 28.9520

Md: 0.9900
AVE. DELTA H: 3.65 in. HOH
AVE. SQRT DELTA P: 20.1755

Bws(est): 0.0100
AVE. Ts: 70 F
PER CENT ISOKINETIC %I: 99.0527

Vm TOTAL: 350.6830 CF
AVE. Tm: 68 F
Vs STACK GAS VELOCITY: 49.5750 f/s

MW MOL. WT. OF STACK GAS WET= 28.8425

LEAK CHECK

GAS METER READING

	START	STOP	COMENTS
1	0.0000	0.0000	
2	0.0000	0.0000	
3	0.0000	0.0000	
4	0.0000	0.0000	
5	0.0000	0.0000	

PLANT- Precision Engineering
DATE- December 17, 1991
LOCATION-Seattle Washington
RUN- Inlet 1-1 Total Cr

INITIAL DATA VALUES

DIA. OF STACK OR CROSS SECTION
24.0000 IN. OR 0.0000 L 0.0000 W IN.

CATCH
FROUNT HALF 3029.0000 ug.
BACK HALF 0.0000 ug.
TOTAL 3029.0000 ug.

BAROMETRIC PRESSURE Pbar: 30.01 in. Hg
Ym METER CORRECTION FACTOR: 0.9780
STACK STATIC PRESSURE Pst: -5.40 in. HOH
NET TIME OF TEST Tt: 360 min.
ESTIMATED % MOISTURE: 1.0
PITOT COEFFICIENT: 0.84
DIA. OF NOZZLE: 0.2480 in.
Vw TOTAL H2O COLLECTED: 72.82 ml
METER DELTA H@: 1.8900 in. HOH
Np # OF POINTS: 73

%CO2 0.70
%O2 21.00
%N2 78.30

CALCULATED VALUES

Milligrams/Dry Std. Cubic Meter = 0.3082
Grains/Dry Std. Cubic Ft. = 1.35E-04
Lbs./Hour = 1.053E-02
Kilograms/Hour = 4.776E-03

AFCH 9344.66
DSCFM 9121.74

Vw gas 3.4298 CF
Vm Std. 347.1130 CF
STACK GAS PRESSURE Ps: 29.6129 in. HOH
TRUE % M 0.9784
AVE. DELTA P 0.7747 in. HOH
MWd MOL WT. OF STACK GAS 28.9520
Md 0.9900
AVE. DELTA H 3.65 in. HOH
AVE. SQRT DELTA P 20.1755
Bws(est) 0.0100
AVE. Ts 70 F
PER CENT ISOKINETIC %I 99.0527
Vm TOTAL 350.6830 CF
AVE. Tm 68 F
Vs STACK GAS VELOCITY 49.5750 f/s
MW MOL. WT. OF STACK GAS WET= 28.8425

LEAK CHECK

GAS METER READING

	START	STOP	COMENTS
1	0.0000	0.0000	
2	0.0000	0.0000	
3	0.0000	0.0000	
4	0.0000	0.0000	
5	0.0000	0.0000	

========
RUN DATA
========

PLANT- Precision Engineering
DATE- December 17, 1991
LOCATION- Seattle Washington
RUN- Inlet 1-1 Cr VI

POINT #		TIME	GAS METER READING	VELOCITY DELTA P	ORIFICE PRESSURE ACTUAL	ORIFICE PRESSURE DESIRED	STACK TEMP	DRY GAS METER TEMP. IN	DRY GAS METER TEMP. OUT	%I PER POINT	COMMENTS
A1	0	0.00	386.718	1.10	5.20	4.25	70	37	36	97.1	
	1	5.00	392.000	1.00	4.70	3.89	70	43	37	114.8	
	2	10.00	398.000	1.00	4.70	3.92	70	48	39	108.3	
	3	15.00	403.700	1.00	4.70	3.95	70	52	41	100.1	
	4	20.00	409.000	1.00	4.70	3.96	70	55	43	105.2	
	5	25.00	414.600	1.00	4.70	3.98	70	58	45	104.7	
A2	0	30.00	420.200	0.98	4.50	3.92	70	60	48	95.8	
	1	35.00	425.300	0.98	4.50	3.94	70	62	49	103.0	
	2	40.00	430.800	0.98	4.50	3.95	70	64	51	95.2	
	3	45.00	435.900	0.98	4.50	3.95	70	64	52	104.4	
	4	50.00	441.500	0.98	4.50	3.97	70	66	54	100.3	
	5	55.00	446.900	0.98	4.50	3.98	70	67	55	100.1	
A3	0	60.00	452.300	0.84	3.98	3.42	70	69	57	105.6	
	1	65.00	457.600	0.84	3.98	3.43	70	69	58	103.5	
	2	70.00	462.800	0.84	3.98	3.43	70	70	59	97.3	
	3	75.00	467.700	0.84	3.98	3.44	70	71	60	99.1	
	4	80.00	472.700	0.84	3.98	3.44	70	71	61	103.0	
	5	85.00	477.900	0.83	3.93	3.41	70	72	62	105.4	
A4	0	90.00	483.200	0.54	2.60	2.22	70	72	63	95.7	
	1	95.00	487.100	0.54	2.60	2.22	70	71	63	105.7	
	2	100.00	491.400	0.58	2.70	2.38	70	71	63	99.6	
	3	105.00	495.600	0.58	2.70	2.38	70	71	63	99.6	
	4	110.00	499.800	0.57	2.70	2.34	70	72	64	97.9	
	5	115.00	503.900	0.57	2.70	2.34	70	72	64	97.9	
A5	0	120.00	508.000	0.55	2.60	2.26	70	72	65	104.4	
	1	125.00	512.300	0.67	3.20	2.76	70	72	65	96.9	
	2	130.00	516.700	0.67	3.20	2.76	70	73	65	101.2	
	3	135.00	521.300	0.67	3.20	2.76	70	74	65	101.1	
	4	140.00	525.900	0.67	3.20	2.77	70	75	66	101.0	
	5	145.00	530.500	0.67	3.20	2.77	70	75	67	98.7	
A6	0	150.00	535.000	0.66	3.10	2.73	70	76	67	99.3	
	1	155.00	539.500	0.65	3.10	2.69	70	76	67	111.2	
	2	160.00	544.500	0.65	3.10	2.69	70	76	68	88.9	
	3	165.00	548.500	0.64	3.00	2.65	70	75	67	100.9	
	4	170.00	553.000	0.64	3.00	2.65	70	75	68	100.8	
	5	175.00	557.500	0.69	3.30	2.86	70	75	68	99.7	
B1	0	180.00	562.118	0.78	3.70	3.19	70	66	65	106.5	
	1	185.00	567.300	0.78	3.70	3.20	70	68	64	96.5	
	2	190.00	572.000	0.78	3.70	3.21	70	71	65	98.2	
	3	195.00	576.800	0.77	3.70	3.17	70	72	65	107.0	
	4	200.00	582.000	0.75	3.50	3.09	70	74	65	93.6	
	5	205.00	586.500	0.77	3.70	3.18	70	74	66	102.6	

B2	0	210.00	591.500	0.88	4.20	3.64	70	76	66	97.8
	1	215.00	596.600	0.90	4.20	3.73	70	76	67	102.3
	2	220.00	602.000	0.87	4.10	3.61	70	77	67	96.2
	3	225.00	607.000	0.87	4.10	3.61	70	78	68	96.1
	4	230.00	612.000	0.87	4.10	3.62	70	78	69	105.6
	5	235.00	617.500	0.87	4.10	3.62	70	79	70	101.5
B3	0	240.00	622.800	0.83	3.90	3.46	70	79	70	98.0
	1	245.00	627.800	0.83	3.90	3.46	70	79	70	94.1
	2	250.00	632.600	0.83	3.90	3.46	70	79	70	101.9
	3	255.00	637.800	0.83	3.90	3.46	70	80	71	95.9
	4	260.00	642.700	0.82	3.90	3.42	70	80	71	84.6
	5	265.00	647.000	0.83	3.90	3.46	70	80	71	117.4
B4	0	270.00	653.000	0.83	3.90	3.46	70	80	71	97.8
	1	275.00	658.000	0.85	4.00	3.55	70	80	71	96.7
	2	280.00	663.000	0.85	4.00	3.55	70	80	71	96.7
	3	285.00	668.000	0.86	4.10	3.59	70	80	71	101.9
	4	290.00	673.300	0.86	4.10	3.59	70	80	71	96.2
	5	295.00	678.300	0.86	4.10	3.59	70	80	71	109.6
B5	0	300.00	684.000	0.86	4.10	3.59	70	80	71	96.2
	1	305.0000	689.000	0.62	2.90	2.59	70	80	71	94.9
	2	310.0000	693.200	0.62	2.90	2.58	70	79	71	104.0
	3	315.0000	697.800	0.62	2.90	2.58	70	79	71	97.2
	4	320.0000	702.100	0.62	2.90	2.58	70	78	71	99.6
	5	325.0000	706.500	0.63	3.00	2.62	70	78	71	98.8
B6	0	330.0000	710.900	0.63	3.00	2.62	70	78	71	98.8
	1	335.0000	715.300	0.62	2.90	2.58	70	78	70	99.6
	2	340.0000	719.700	0.63	3.00	2.62	70	77	70	99.0
	3	345.0000	724.100	0.62	2.90	2.58	70	77	70	102.0
	4	350.0000	728.600	0.63	3.00	2.62	70	76	70	96.8
	5	355.0000	732.900	0.63	3.00	2.61	70	76	69	101.4
	6	360.0000	737.401	0.63	3.00	2.60	70	72	68	0.0

PLANT- Precision Engineering
DATE- December 18, 1991
LOCATION-Seattle, Washington
RUN- Inlet 2-1 Cr VI

INITIAL DATA VALUES

DIA. OF STACK OR CROSS SECTION
18.0000 IN. OR 0.0000 L 0.0000 W IN.

CATCH
FRONT HALF 1589.0000 ug.
BACK HALF 0.0000 ug.
TOTAL 1589.0000 ug.

BAROMETRIC PRESSURE Pbar: 30.01 in. Hg
Vm METER CORRECTION FACTOR: 0.9790
STACK STATIC PRESSURE Pst: -5.70 in. HOH
NET TIME OF TEST Tt: 360 min.
ESTIMATED % MOISTURE: 0.7
PITOT COEFFICIENT: 0.84
DIA. OF NOZZLE: 0.2490 in.
Vw TOTAL H2O COLLECTED: 53.03 ml
METER DELTA H@: 1.9470 in. HOH
Np # OF POINTS: 72

%CO2 0.70
%O2 21.00
%N2 78.30

CALCULATED VALUES

Milligrams/Dry Std. Cubic Meter = 0.1526
Grains/Dry Std. Cubic Ft. = 6.67E-05
Lbs./Hour = 3.031E-03
Kilograms/Hour = 1.375E-03
AFCM 5408.34
DSCFM 5301.38
Vw gas 2.4977 CF
Vm Std. 367.6283 CF
STACK GAS PRESSURE Ps 29.5909 in. HOH
TRUE % M 0.6748
AVE. DELTA P 0.8414 in. HOH
MWd MOL WT. OF STACK GAS 28.9520
Md 0.9930
AVE. DELTA H 3.98 in. HOH
AVE. SQRT DELTA P 20.7629
Bws(est) 0.0070
AVE. Ts 69 F
PER CENT ISOKINETIC %I 100.7210
Vm TOTAL 369.6190 CF
AVE. Tm 66 F
Vs STACK GAS VELOCITY 51.0083 f/s
MW MOL. WT. OF STACK GAS WET= 28.8753

LEAK CHECK

GAS METER READING

	START	STOP	COMMENTS
1	0.0000	0.0000	
2	0.0000	0.0000	
3	0.0000	0.0000	
4	0.0000	0.0000	
5	0.0000	0.0000	

PLANT- Precision Engineering
DATE- December 18, 1991
LOCATION-Seattle, Washington
RUN- Inlet 2-1 Total Cr

INITIAL DATA VALUES

DIA. OF STACK OR CROSS SECTION
18.0000 IN. OR 0.0000 L 0.0000 W IN.

CATCH
FROUNT HALF 1573.0000 ug.
BACK HALF 0.0000 ug.
TOTAL 1573.0000 ug.

BAROMETRIC PRESSURE Pbar: 30.01 in. Hg
Ym METER CORRECTION FACTOR: 0.9790
STACK STATIC PRESSURE Pst: -5.70 in. HOH
NET TIME OF TEST Tt: 360 min.
ESTIMATED % MOISTURE: 0.7
PITOT COEFFICIENT: 0.84
DIA. OF NOZZLE: 0.2490 in.
Vw TOTAL H2O COLLECTED: 53.03 ml
METER DELTA H@: 1.9470 in. HOH
Np # OF POINTS: 72

%CO2	%O2	%N2
0.70	21.00	78.30

CALCULATED VALUES

Milligrams/Dry Std. Cubic Meter = 0.1511
Grains/Dry Std. Cubic Ft. = 6.60E-05
Lbs./Hour = 3.000E-03
Kilograms/Hour = 1.361E-03

ACFM	DSCFM
5408.34	5301.38

Vw gas	Vm Std.	STACK GAS PRESSURE Ps
2.4977 CF	367.6283 CF	29.5909 in. HOH
TRUE % M	AVE. DELTA P	MWd MOL WT. OF STACK GAS
0.6748	0.8414 in. HOH	28.9520
Md	AVE. DELTA H	AVE. SQRT DELTA P
0.9930	3.98 in. HOH	20.7629
Bws(est)	AVE. Ts	PER CENT ISOKINETIC %I
0.0070	69 F	100.7210
Vm TOTAL	AVE. Tm	Vs STACK GAS VELOCITY
369.6190 CF	66 F	51.0083 f/s

MW MOL. WT. OF STACK GAS WET= 28.8753

LEAK CHECK

GAS METER READING

	START	STOP	COMMENTS
1	0.0000	0.0000	
2	0.0000	0.0000	
3	0.0000	0.0000	
4	0.0000	0.0000	
5	0.0000	0.0000	

========
RUN DATA
========

PLANT- Precision Engineering
DATE- December 18, 1991
LOCATION- Seattle, Washington
RUN- Inlet 2-1 Total Cr

POINT #		TIME	GAS METER READING	VELOCITY DELTA P	ORIFICE PRESSURE ACTUAL	ORIFICE PRESSURE DESIRED	STACK TEMP	DRY GAS METER TEMP. IN	DRY GAS METER TEMP. OUT	%I PER POINT	COMMENTS
A1	0	0.0000	269.99	0.80	3.70	3.25	69	36	36	67.5	
	1	5.0000	273.20	0.78	3.80	3.18	69	38	35	108.4	
	2	10.0000	278.30	0.78	3.80	3.20	69	44	36	107.6	
	3	15.0000	283.40	0.78	3.80	3.22	69	49	38	104.8	
	4	20.0000	288.40	0.78	3.80	3.24	69	52	40	106.3	
	5	25.0000	293.50	0.78	3.70	3.25	69	54	42	103.8	
A2	0	30.0000	298.50	0.55	2.60	2.30	69	57	44	108.0	
	1	35.0000	302.90	0.57	2.70	2.39	69	58	46	105.8	
	2	40.0000	307.30	0.55	2.60	2.31	69	59	47	102.6	
	3	45.0000	311.50	0.56	2.65	2.36	69	60	49	103.8	
	4	50.0000	315.80	0.55	2.60	2.33	69	61	50	104.5	
	5	55.0000	320.10	0.55	2.60	2.33	69	62	51	104.3	
A3	0	60.0000	324.40	0.38	1.80	1.61	69	63	52	107.6	
	1	65.0000	328.10	0.37	1.75	1.57	69	63	54	102.9	
	2	70.0000	331.60	0.37	1.75	1.58	69	64	55	108.6	
	3	75.0000	335.30	0.36	1.71	1.54	69	64	56	118.9	
	4	80.0000	339.30	0.36	1.71	1.54	69	67	58	88.7	
	5	85.0000	342.30	0.36	1.71	1.54	69	65	57	103.8	
A4	0	90.0000	345.80	0.95	4.50	4.07	69	66	58	99.1	
	1	95.0000	351.20	0.97	4.60	4.17	69	69	59	103.1	
	2	100.0000	356.90	0.98	4.65	4.22	69	70	60	100.6	
	3	105.0000	362.50	0.98	4.65	4.22	69	71	60	102.3	
	4	110.0000	368.20	0.96	4.55	4.15	69	72	61	103.2	
	5	115.0000	373.90	0.96	4.55	4.15	69	73	62	103.0	
A5	0	120.0000	379.60	1.50	7.10	6.50	69	73	63	93.0	
	1	125.0000	386.00	1.10	5.21	4.77	69	74	64	102.8	
	2	130.0000	392.10	1.20	5.69	5.21	69	74	64	100.2	
	3	135.0000	398.30	1.20	5.69	5.22	69	75	65	100.0	
	4	140.0000	404.50	1.20	5.69	5.22	69	76	65	103.1	
	5	145.0000	410.90	1.10	5.20	4.79	69	76	66	99.1	
A6	0	150.0000	416.80	1.10	5.20	4.80	69	77	66	102.3	
	1	155.0000	422.90	1.40	6.60	6.11	69	77	67	93.9	
	2	160.0000	429.20	1.40	6.60	6.12	69	78	68	84.8	
	3	165.0000	434.90	1.40	6.60	6.12	69	77	68	74.5	
	4	170.0000	439.90	1.40	6.60	6.12	69	77	68	105.7	
	5	175.0000	447.00	1.40	6.60	6.12	69	78	68	89.9	
B1	0	180.0000	453.05	0.65	3.10	2.80	69	65	65	108.9	
	1	185.0000	458.00	1.10	5.20	4.76	69	69	65	93.0	
	2	190.0000	463.50	1.10	5.20	4.77	69	72	65	101.2	
	3	195.0000	469.50	1.10	5.20	4.78	69	74	65	102.7	
	4	200.0000	475.60	1.10	5.20	4.79	69	75	66	100.8	
	5	205.0000	481.60	1.10	5.20	4.79	69	76	66	102.4	

B2	0	210.0000	487.70	1.10	5.20	4.79	69	76	66	100.7
	1	215.0000	493.70	1.10	5.20	4.80	69	77	67	100.5
	2	220.0000	499.70	1.10	5.20	4.80	69	78	67	102.1
	3	225.0000	505.80	1.10	5.20	4.81	69	78	68	102.0
	4	230.0000	511.90	1.10	5.20	4.81	69	79	68	101.9
	5	235.0000	518.00	1.10	5.20	4.82	69	79	69	100.2
B3	0	240.0000	524.00	0.83	3.90	3.64	69	80	69	107.2
	1	245.0000	529.60	0.79	3.70	3.46	69	79	70	102.0
	2	250.0000	534.80	0.79	3.70	3.46	69	79	70	98.1
	3	255.0000	539.80	0.78	3.70	3.42	69	79	70	106.6
	4	260.0000	545.20	0.79	3.70	3.46	69	79	70	98.1
	5	265.0000	550.20	0.77	3.60	3.38	69	79	70	91.3
B4	0	270.0000	554.80	0.52	2.40	2.28	69	78	70	130.2
	1	275.0000	560.20	0.50	2.40	2.19	69	77	70	105.9
	2	280.0000	564.50	0.50	2.40	2.19	69	77	70	103.4
	3	285.0000	568.70	0.50	2.40	2.19	69	76	70	101.0
	4	290.0000	572.80	0.50	2.40	2.18	69	76	69	103.6
	5	295.0000	577.00	0.50	2.40	2.18	69	76	69	106.1
B5	0	300.0000	581.30	0.62	2.90	2.71	69	76	69	90.9
	1	305.0000	585.40	0.74	3.50	3.23	69	76	69	99.6
	2	310.0000	590.30	0.74	3.50	3.24	69	77	69	101.5
	3	315.0000	595.30	0.75	3.50	3.28	69	77	69	100.9
	4	320.0000	600.30	0.75	3.50	3.28	69	77	69	100.9
	5	325.0000	605.30	0.71	3.30	3.10	69	77	69	101.5
B6	0	330.0000	610.20	0.71	3.30	3.10	69	77	69	101.5
	1	335.0000	615.10	0.71	3.30	3.10	69	77	69	101.5
	2	340.0000	620.00	0.71	3.30	3.10	69	76	68	101.7
	3	345.0000	624.90	0.75	3.50	3.28	69	76	69	101.0
	4	350.0000	629.90	0.70	3.30	3.05	69	75	68	100.5
	5	355.0000	634.70	0.74	3.50	3.23	69	75	68	99.9
	6	360.0000	639.60			0.00		Addl		0.0

Section 3

SUMMARY OF SAMPLE COLLECTION, EMISSION CALCULATIONS AND RESULTS

3.1 Sample Collection

Emission samples were collected using a modification of U.S. EPA Method 13-B. The samples were collected simultaneously from Inlets No. 1 and No. 2 and from the Outlet of the MPME under normal operating conditions. Three tests were conducted at each sampling location. Sampling times of 4 or 6 hours per test run were used to ensure that adequate quantities of chromium were collected for subsequent chemical analysis.

Grab samples from the plating tank solutions (Tanks 1, 2 and 7) and the MPME water were also collected during each sampling run. These samples were obtained at the beginning, middle and at the end of each Method 13-B test run.

3.2 Stack Gas Parameters

Stack gas parameters, at each sampling location, are shown in Table 3-1. At Inlet No. 1, the stack gas velocity averaged48.92feet per second (fps), the average stack temperature was 70°F and the average moisture content was 1.11%. The volumetric flow rates at Inlet No. 1 were 9473 actual cubic feet per minute (acfm) and 9254 dry standard cubic feet per minute (dscfm). At Inlet No. 2, the stack gas velocity averaged49.96fps, the average stack temperature was 69°F and the average moisture content was 0.75%. The volumetric flow rates at Inlet No. 2 were 52.97 acfm and 5198 dscfm.

At the Outlet, the stack gas velocities averaged49.53fps, the average stack temperature was 72°F and the average moisture content was 0.98%. The average volumetric flow rates at the Outlet were 14588 acfm and 14406 dscfm.

The stack gas at all sampling locations was essentially ambient air and thus was assigned a dry molecular weight of 28.95 lb/lb-mole. Variation in isokinetic sampling rates were within allowable limits for all sampling runs of Method 13-B except Run 2 of Inlet 2 which had an isokinetic rate of 88.81%.

The evaluation of particle size, from previous test runs, indicate that more than 85% of the particles emitted from a controlled electroplating process are less than 2.5 microns in diameter. Particles less than 2.5 microns behave like a gas rather than a particulate. In gaseous sampling the isokinetic sampling rate is not considered to be significant. Therefore, no adjustments were made to the data and the results are acceptable.

3.3 Emission Calculations and Discussion of Results

This subsection of the report provides the following information: 1) Cr-VI results from colorimetry and ICPCR analyses; 2) Cr-T results from ICP analysis; 3) Cr-VI and Cr-T concentrations in the plating tank solutions, MPME water and sampling train blank samples; 4) computerized spreadsheet calculations of emission concentrations and mass emission rates; 5) MPME removal efficiencies; and 6) MPME penetration.

Table 3.1 SUMMARY OF STACK GAS CONDITIONS

Inlet No.1

Run No.	Velocity fps[a]	Stack Temp. °F	Flow Rate		Moisture %	% Isokinetic Rate
			acfm[b]	dscfm[c]		
1	45.58	70	9345	9122	0.98	99.05
2	48.53	69	9,148	8,830	1.14	98.99
3	52.66	70	9,927	9,810	1.21	93.32
Average	48.92	70	9473	9254	**1.11**	97.12

Inlet No. 2

Run No.	Velocity fps[a]	Stack Temp. °F	Flow Rate		Moisture %	% Isokinetic Rate
			acfm[b]	dscfm[c]		
1	51.01	69	5408	5301	0.67	100.72
2	52.02	70	5,516	5,350	0.65	88.81
3	46.85	68	4,968	4,943	0.94	98.37
Average	49.96	69	5297	5198	**0.75**	95.97

Outlet

Run No.	Velocity fps[a]	Stack Temp. °F	Flow Rate		Moisture %	% Isokinetic Rate
			acfm[b]	dscfm[c]		
1	49.15	72	14474	14272	0.97	105.45
2	49.03	72	14,442	14,065	1.08	99.68
3	50.41	72	14,847	14,882	0.90	99.48
Average	49.53	72	14588	14406	**0.98**	101.54

[a] Feet per second
[b] Actual cubic feet per minute
[c] Dry standard cubic feet per minute at 68 °F and 29.92" Hg

3.3.1 Cr-VI Results From Colorimetry and ICPCR Analyses

Table 3.2 list Cr-VI results obtained from two analytical techniques, namely: 1) colorimetry using diphenylcarbazide; and 2) ICPCR. The colorimetric technique , used in the field to determine Cr-VI, provided a rapid analysis of chromium concentrations. The results were not used in the emission calculations in this report and are provided in Appendix E for information only. RTIS's analytical results for total chromium (Cr-T) and hexavalent chromium (Cr-VI) were used to make emission calculations in this report.

Table 3.3 provides analytical results of Cr-VI mass emission testing at the Precision Engineering, Inc plant. The samples were analyzed using Ion-Chromatography with a Post Column Reactor (ICPCR). RTIL's analytical data report is provided in Appendix D. The average concentration at the outlet was 0.0103 mg/m^3. The average mass emission rate (lbs/hr) of the two inlets combined was 1.44×10^{-2} lb/hr and the outlet had an emission rate of 5.57×10^{-4} lb/hr.

3.2.2 Total Chromium Results From ICP Analysis

Presented in Table 3.4 are the total chromium (CR-T) emission results. RTIL's analytical data report is provided in Appendix D. The Cr-T emission concentration at the outlet averaged 0.0108 mg/m^3. The average Cr-T mass emission rate from Inlets No. 1 and No. 2 combined was 1.51×10^{-2} lb/hr and the outlet average emission rate was 5.83×10^{-4} lb/hr.

Table 3.2. COMPARISON OF EMISSION SAMPLE ANALYSIS RESULTS[a] FOR CHROMIUM-VI USING COLORIMETRY[b] AND ICPCR[c] TECHNIQUES

Inlet No. 1

Test Run No.	Sampling Time (min)	Total Cr-VI (μg)	
		Colorimetry[b]	ICPCR[c]
Run No.1	360	2,862	2,889
Run No. 2	240	743	1,774
Run No. 3	240	848	2,891
Average		**1,484**	**2,518**

Inlet No. 2

Run No. 1	360	1,517	1,589
Run No. 2	240	808	770
Run No. 3	240	779	813
Average		**1,035**	**1,057**

Outlet

Run No. 1	360	123	146
Run No. 2	240	37.8	60.6
Run No. 3	240	50.3	53.5
Average		**70.4**	**86.7**

---

[a] Results are expressed as total microgram of Chromium-VI
[b] Colormetric quantification on-site using diphenylcarbazide organic analytical reagent
[c] Ion-chromatography with a post column reactor.

Table 3.3. ANALYTICAL[a] RESULTS OF CHROMIUM-VI MASS EMISSION TESTING

Inlets[b]

Test Run No.	Total Cr-VI (μg)[c]	Emission Concentration (mg/m^3)[c]	Mass Emission Rate (lb/hr)[c]	Mass Emission Rate (kg/hr)[c]
1	4,478		1.30×10^{-2}	5.93×10^{-3}
2	2,544		1.175×10^{-2}	5.33×10^{-3}
3	3,704		1.838×10^{-2}	8.33×10^{-3}
Average	3,575		1.44×10^{-2}	6.53×10^{-3}

Outlet

Test Run No.	Total Cr-VI (μg)[c]	Emission Concentration (mg/m^3)[c]	Mass Emission Rate (lb/hr)[c]	Mass Emission Rate (kg/hr)[c]
1	146	0.0139	7.45×10^{-4}	3.38×10^{-4}
2	60.6	0.0093	4.91×10^{-4}	2.22×10^{-4}
3	53.5	0.0078	4.34×10^{-4}	1.97×10^{-4}
Average	86.7	0.0103	5.57×10^{-4}	2.52×10^{-4}

NOTE: The concentration in milligrams per cubic meter for the two inlets combined is omitted from the inlet data. Since the flow rates for the two inlets were different, a combined concentration number would not reflect the concentration of either inlet and is not needed in this report. Inlet #1 averaged 0.3364 Mg/M^3 of hexavalent chromium while Inlet #2 averaged 0.1353 Mg/M^3 of hexavalent chromium.

---

[a] Analysis method, Ion-Chromatography with Post Column Reactor.

[b] The control device has two inlets (Inlet No.1 and Inlet No.2).

[c] Sum of Cr-VI emissions from Inlet No.1 and Inlet No.2.

Table 3.4. ANALYTICAL[a] RESULTS OF TOTAL CHROMIUM MASS EMISSION TESTING

Inlets[b]

Test Run No.	Cr-T (μg)[c]	Emission Concentration (mg/m^3)[c]	Mass Emission Rate (lb/hr)[c]	Mass Emission Rate (kg/hr)[c]
1	4,602		1.35×10^{-2}	6.14×10^{-3}
2	2,728		1.25×10^{-2}	5.656×10^{-3}
3	3,921		1.93×10^{-2}	8.741×10^{-3}
Average	3,750		1.51×10^{-2}	6.846×10^{-3}

Outlet

Test Run No.	Cr-T (μg)[c]	Emission Concentration (mg/m^3)[c]	Mass Emission Rate (lb/hr)[c]	Mass Emission Rate (kg/hr)[c]
1	137.0	0.0131	6.99×10^{-4}	3.17×10^{-4}
2	68.3	0.0105	5.53×10^{-4}	2.51×10^{-4}
3	61.3	0.0089	4.97×10^{-4}	2.26×10^{-4}
Average	88.9	0.0108	5.83×10^{-4}	2.65×10^{-4}

NOTE: The concentration in milligrams per cubic meter for the two inlets combined is omitted from the inlet data. Since the flow rates for the two inlets were different, a combined concentration number would not reflect the concentration of either inlet and is not needed in this report. Inlet #1 averaged 0.3492 Mg/M^3 of total chromium while Inlet #2 averaged 0.1478 Mg/M^3 of total chromium.

---

[a] Analysis method, Inductively Coupled Plasma (ICP)

[b] The control device has two inlets (Inlet No. 1 and Inlet No. 2)

[c] Sum of total chromium emissions from Inlet No. 1 and Inlet No. 2

3.3.3 Concentrations In Plating Tank Solution, MPME Water and Train Blank Samples

Cr-VI and Cr-T concentrations in the plating tank solution, MPME water and train blank samples were determined by RTIL using ICPCR and ICP. The sample concentrations are presented in Table 3.5. The concentrations of chromium remained essentially constant throughout the testing period.

3.3.4 Computerized Spreadsheet Calculations

A computerized spreadsheet, provided by Mr. Frank Clay (U.S. EPA, Task Manager), was used to calculate the emission concentrations and mass emission rates in this report. Manual calculations were made by AST personnel to verify that the computer results were accurate. The computer printouts are provided in Appendix A. Appendix F presents the equations used to make these manual verifications.

3.3.5 Removal Efficiency of The Mesh Pad Mist Eliminator

Chromium removal efficiencies for the MPME system were determined by simultaneously sampling the two inlets and outlet of the MPME. The mass emission rates were used to calculate removal efficiencies. Removal efficiency is calculated using the equation below.

$$RE = \frac{C_i - C_o}{C_i} \times 100$$

Where:

RE = *% Removal Efficiency*

C_i = $\sum$ *of mass emission rates at Inlets* 1 *and* 2, *lb/hr*

C_o = *Mass emission rate at the outlet, lb/hr*

Table 3.5. ANALYSIS OF PLATING TANK SOLUTIONS, MPME WATER AND BLANK SAMPLES

SAMPLES*	Cr-VI[a] (μg/ml)	Cr-T[b] (μg/ml)
Tank 1 Run No. 1	$1.22 \times 10^{+5}$	$1.31 \times 10^{+5}$
Tank 1 Run No. 2	$8.59 \times 10^{+4}$	$1.30 \times 10^{+5}$
Tank 1 Run No. 3	$1.08 \times 10^{+5}$	$1.26 \times 10^{+5}$
Tank 2 Run No. 1	$1.15 \times 10^{+5}$	$1.27 \times 10^{+5}$
Tank 2 Run No. 2	$1.22 \times 10^{+5}$	$1.25 \times 10^{+5}$
Tank 2 Run No. 3	$1.14 \times 10^{+5}$	$1.24 \times 10^{+5}$
Tank 7 Run No. 1	$1.23 \times 10^{+5}$	$1.23 \times 10^{+5}$
Tank 7 Run No. 2	$1.23 \times 10^{+5}$	$1.26 \times 10^{+5}$
Tank 7 Run No. 3	$1.20 \times 10^{+5}$	$1.25 \times 10^{+5}$
Sampling Train		
Blank [c]	7.37×10^{-3}	3.20×10^{-2}
MJ Outlet Run No. 1	7.59×10^{-2} ($6.4 \times 10^{-2**}$)	2.69×10^{-1}
MJ Outlet Run No. 2	7.43×10^{-2} ($5.00 \times 10^{-2**}$)	2.86×10^{-1}
MJ Outlet Run No. 3	1.81×10^{-1} ($2.03 \times 10^{-1**}$)	6.00×10^{-3}

* Liquid grab samples from tanks 1, 2, 7 and the MPME were collected at the beginning, middle and end of each Method 13-B run. All samples are composites.

[a] ICPCR was used for analysis

[b] ICP was used for analysis

[c] The Method 13-B sampling train was cleaned between test runs. The blank sample, is a rinseate, was collected after cleaning the train components.

** In-field colorimetric analysis results for MPME water

Mass emission rates are presented in Tables 3.3 and 3.4. The data in Tables 3.3 and 3.4 indicate that more than 95% of the mass emissions are of Cr-VI and less than 5% of the emissions are of Cr-III.

3.3.6 Penetration of The Mesh Pad Mist Eliminator

Penetration can be used to evaluate the performance of a chromium emission control device such as a MPME. Penetration is defined as the percentage of chromium that escapes or is not collected by an emission control device. Percent penetration is calculated using the equation below.

$$\textit{Percent Penetration} = 100\% - RE$$

Where:

RE = ***% Removal Efficiency***

Often, the percent penetration results reveal more about the process conditions than the percent efficiency results.

The calculated removal efficiencies are tabulated in Table 3.6. The average removal efficiency for Cr-VI was 95.94%. The average removal efficiency for Cr-T was 95.96%. The removal efficiencies for Cr-T and Cr-VI are essentially the same. As pointed out earlier, most of the mass emissions are of Cr-VI (~95%). The percent penetration for each test run was also calculated. Table 3.7 lists the results of the removal efficiency and the percent penetration calculations. Table 3.7 shows that about 4% of the chromium emissions penetrated the mesh pad mist eliminator.

Table 3.6. SUMMARY OF THE MESH PAD MIST ELIMINATOR CHROMIUM REMOVAL EFFICIENCIES

Analyte	Analytical Technique Used	Test Run No.	Mass Emission Rates at Inlets No. 1 and No. 2* (lb/hr)	Mass Emission Rate at Outlet (lb/hr)	Removal Efficiency (%)
Cr-VI	ICPCR	1	1.307×10^{-2}	7.449×10^{-4}	94.30
Cr-VI	ICPCR	2	1.175×10^{-2}	4.906×10^{-4}	95.82
Cr-VI	ICPCR	3	1.838×10^{-2}	4.340×10^{-4}	97.64
Average	NA	NA	1.440×10^{-2}	5.65×10^{-4}	95.92
Cr-T	ICP	1	1.353×10^{-2}	6.990×10^{-4}	94.83
Cr-T	ICP	2	1.247×10^{-2}	5.530×10^{-4}	95.57
Cr-T	ICP	3	1.927×10^{-2}	4.972×10^{-4}	97.42
Average	NA	NA	1.509×10^{-2}	5.831×10^{-4}	95.94

---

* - Inlets 1 and 2 mass emission rates were combined.

NA - Not Applicable

Table 3.7. REMOVAL EFFICIENCY AND PERCENT PENETRATION* OF CHROMIUM THROUGH THE MESH PAD MIST ELIMINATOR

Test Run No.	% Removal Efficiency		% Penetration	
	Cr-VI	Cr-T	Cr-VI	Cr-T
1	94.30	94.83	5.70	5.17
2	95.82	95.57	4.18	4.43
3	97.64	97.42	2.36	2.58
Average	95.92	95.94	4.08	4.06

* Percent Penetration = 100% - %Removal Efficiency

ERRATA SHEET FOR ELECTRONIC CHROME AND GRINDING TEST REPORT

In February 1992, the U.S. Environmental Protection Agency performed a source test for hexavalent chromium emissions from the scrubber at the Electronic Chrome and Grinding Company in Santa Fe Springs, California. The purpose of the test was to determine if the addition of polypropylene balls and a foam blanket to the plating tank bath would reduce hexavalent chromium emissions from the scrubber to a level that would be acceptable by the air regulatory agency of the State of California.

After the final report of the source test was distributed, an error was found in Chapter 3; Table, 3-5, which summarizes scrubber emissions in milligrams per ampere-hour, was found to be in error. Table 3-5 has been revised to present the correct data and is attached; it completely replaces the original Table 3-5.

Corrections

Electronic Chrome and Grinding

TABLE 3-5

SUMMARY OF THE SCRUBBER EMISSIONS
EXPRESSED AS MILLIGRAMS PER AMPHERE-HOUR

RUN #	CONDITION[a]	EMISSION RATE (Mg per Hr)[b]	TOTAL CURRENT IN AMP-HOURS DURING TEST	TEST LENGTH (HOURS)	AMP-HOURS PER HOUR	Mg/Amp-hour[c]
1	WOFB-PB	295.6	9600	2	4800	0.062
2	WOFB-PB	417.1	10,200	2	5100	0.082
3	WOFB-PB	373.1	10,200	2	5100	0.073
4	WFB-PB	57.39	10,000	2	5000	0.011
5	WFB-PB	50.78	10,200	2	5100	0.010
6	WFB-PB	37.05	10,200	2	5100	0.007

a WOFB-PB = Without foam blanket or polypropylene balls
WFB-PB = With foam blanket and polypropylene balls

b Emission rate in milligrams per hour = Kilograms per hour x 10^6 milligrams per kilogram

c Milligrams per amp-hour = $\frac{\text{Milligrams per hour}}{\text{Amp-hour per hour}}$

ERRATA SHEET FOR ELECTRONIC CHROME AND GRINDING TEST REPORT

In February 1992, the U.S. Environmental Protection Agency performed a source test for hexavalent chromium emissions from the scrubber at the Electronic Chrome and Grinding Company in Santa Fe Springs, California. The purpose of the test was to determine if the addition of polypropylene balls and a foam blanket to the plating tank bath would reduce hexavalent chromium emissions from the scrubber to a level that would be acceptable by the air regulatory agency of the State of California.

After the final report of the source test was distributed, an error was found in Chapter 3; Table, 3-5, which summarizes scrubber emissions in milligrams per ampere-hour, was found to be in error. Table 3-5 has been revised to present the correct data and is attached; it completely replaces the original Table 3-5.

Correction

Electronic Chrome

& Grinding

TABLE 3-5

SUMMARY OF THE SCRUBBER EMISSIONS
EXPRESSED AS MILLIGRAMS PER AMPHERE-HOUR

RUN #	CONDITION[a]	EMISSION RATE (Mg per Hr)[b]	TOTAL CURRENT IN AMP-HOURS DURING TEST	TEST LENGTH (HOURS)	AMP-HOURS PER HOUR	Mg/Amp-hour[c]
1	WOFB-PB	295.6	9600	2	4800	0.062
2	WOFB-PB	417.1	10,200	2	5100	0.082
3	WOFB-PB	373.1	10,200	2	5100	0.073
4	WFB-PB	57.39	10,000	2	5000	0.011
5	WFB-PB	50.78	10,200	2	5100	0.010
6	WFB-PB	37.05	10,200	2	5100	0.007

a WOFB-PB = Without foam blanket or polypropylene balls
WFB-PB = With foam blanket and polypropylene balls

b Emission rate in milligrams per hour = Kilograms per hour x 10^6 milligrams per kilogram

c Milligrams per amp-hour = $\frac{\text{Milligrams per hour}}{\text{Amp-hour per hour}}$

Re: Electronic Chrome Test Report
Run I-3 Discrepancy (Original Data vs EMB Final Report)

Frank Clay's original data was changed after he submitted them to us.
Specifically, run I-3 results in the EMB test report were about double compared to Frank's original data. Upon reviewing Lab Reports, Custody sheets, etc., I have determined:

Run I-3 catch was reported by Frank to be 2914 μg.
EMB Test Report value for this catch is 5829 μg.
Lab report in Test Report shows 2 parts to catch:
one at 3345 μg and one at 2484 μg.
Frank apparently used average of two (2914 μg),
Final Test Report used total of two (5829 μg).

OK per Frank 4-6-93

For ~~Innovative Technology~~ Enabling Doc Report, I used results in Final Test Report, as the value of the catches added together (5829 μg) more accurately matches values of catches for other runs.

Marge Cassidy
February 20, 1993

Re: Electronic Chrome Test Report
Discrepancy for Process Emission Values

On July 30, 1992, at the request of AST, I faxed the values for process emissions to AST. Outlet process emission values provided to them (in mg/Ah) were as follows:

Run O-1	0.061	Run O-4	0.011
Run O-2	0.081	Run O-5	0.010
Run O-3	0.074	Run O-6	0.007

Their Final Test Report presented these values (in mg/Ah) as:

Run O-1	8.312×10^{-6}	Run O-4	1.415×10^{-6}
Run O-2	9.696×10^{-6}	Run O-5	1.156×10^{-6}
Run O-3	8.49×10^{-6}	Run O-6	8.88×10^{-7}

Using the data from their Final Test Report, I recalculated the values (in mg/Ah) as:

Run O-1	0.062	Run O-4	0.011
Run O-2	0.082	Run O-5	0.010
Run O-3	0.073	Run O-6	0.007

ok per Frank.

On 3/22/93, I spoke to Frank Clay about this and faxed him the above numbers. He will have an errata sheet issued.

Marge Cassidy
March 23, 1993

ADDENDUM FOR THE U.S. ENVIRONMENTAL PROTECTION AGENCY TEST REPORT FOR THE MAY 1991 SOURCE TEST AT THE REMCO HYDRAULICS INCORPORATED ELECTROPLATING FACILITY IN WILLITS, CALIFORNIA

At the request of Midwest Research Institute, this addendum has been prepared for the Remco Hydraulics Test Report. The changes are minor and adjust the control device efficiency values found in the report.

At Inlet B on run three, it is suspected that the probe touched the stack wall and produced a high bias for that run. The emission results from that run are nearly an order of magnitude greater than the emission results from the other two runs at Inlet B. The sample from Inlet B for run three was analyzed twice to insure that the bias was not due to an analytical error. The second analysis confirmed that the first analytical value was correct. For this addendum, run three was not used in the pounds per hour emission rate or the control device efficiency calculations. The attached page shows the differences that occur when run three is not used in data results.

The addendum changes pertain to Chapter 3 only, and a replacement for the entire chapter is provided.

REMCO HYDRAULICS - COMPARISON OF AVERAGE EFFICIENCIES

The table below presents a comparison of the efficiencies of the control device when the averages of runs one, two and three are compared with the averages of runs one and two only.

Three analytical techniques were used: (1) the diphenylcarbazide (colorimetric) method for hexavalent chromium, (2) ion chromatography with a post column reactor (IC) for hexavalent chromium, and (3) inductively coupled argon plasmology (ICP) for total chromium.

During run three at inlet B, it is suspected that the probe touched the stack wall and introduced a high bias into the data. This is the reason for comparing the averages of runs one, two and three with the averages of runs one and two only.

ANALYSIS TYPE	AVERAGE % EFFICIENCY RUNS 1,2, & 3	AVERAGE % EFFICIENCY RUNS 1 & 2	AVERAGE DIFFERENCE (PERCENT)
HEX CHROMIUM COLORIMETRIC	99.9908%	99.9887%	-0.0021%
TOTAL CHROMIUM ICP ANALYSIS	99.9917%	99.9930%	+0.0013%
HEX CHROMIUM IC ANALYSIS	99.9922%	99.9937%	+0.0015%
AVERAGE	99.9916%	99.9918%	+0.0002%

Note: The extreme right hand column gives the percent difference when the average of all three runs is compared with the average of runs one and two only. A plus sign (+) indicates that the efficiency of the control device went up when run three was eliminated and a minus sign (-) indicates that the efficiency went down when run three was eliminated.

SECTION 3

SUMMARY AND DISCUSSION OF RESULTS

Simultaneous sampling was conducted at Inlets IA and IB and at the outlet of the packed bed scrubber (see Figure 1 on page 4-2) under normal operating conditions of the plating processes and control system. Three isokinetic tests were conducted at each site. A sampling time of 360 minutes was employed on each run to insure collection of adequate quantities of chromium at the outlet.

In addition to the emission samples, grab samples of the operating plating baths and of the scrubber water were composited during each sampling run. All of these samples were colorimetrically analyzed on-site for Cr^{+6}. All of the emission samples and a set of scrubber water samples were later analyzed off-site for Cr^{+6} and total chrome using ion chromatography with a post column reactor for Cr^{+6}. Inductively Coupled Argon Plasmology was used to determine total chrome.

In order to meet the California standard for chromium emissions, the outlet location must emit no more than 0.006 milligrams per amp hour or the control device must achieve an efficiency of 99.8%. Emissions at the outlet averaged 0.004 milligrams per amp hour and the efficiency of the control device averaged 99.994 % based on the average of Cr^{+6} emissions from runs one and two only[1].

Summary of Stack Gas Conditions

Stack gas conditions at each sampling location are presented in Table 1. Volumetric flow rates at each location showed little variation between runs. At Inlet A, the velocity averaged 41.02 feet per second (fps), with average temperature of 72°F and moisture content of 1.05%. Volumetric flow rates averaged 13,428.4 actual cubic feet per minute (acfm) and 12,643.0 dry standard cubic feet per minute (dscfm).

At Inlet B, the velocity averaged 44.43 fps, with average temperatures of 73°F and moisture content of 1.29%. Average volumetric flow rates were 10,599.0 acfm and 9,901.5 dscfm. Conditions at the outlet averaged 38.18 fps, 70°F, and 1.88% moisture. Volumetric flow rates at the outlet averaged 25.613.2 acfm and 24,022.8 dscfm.

The stack gases at all sampling locations were essentially ambient air and were assigned a dry molecular weight of 29.0 lb/lb mole. Variations of isokinetic sampling rates were within allowable limits on all sampling runs.

[1] During run three, it is suspected that the probe touched the stack wall during the test. The emission calculations and efficiencies are based on the average of runs one and two only.

1 April 1993

REMCO HYDRAULICS, INC.
(AMP HOUR RESULTS)

Run No.	mg/ah	(gr/ah)
IA-1	144.00	(2.22)
IA-2	107.00	(1.65)
IA-3	138.00	(2.13)
AVERAGE	130.00	(2.01)
IB-1	0.52	(0.008)
IB-2	0.83	(0.013)
IB-3	8.20*	(0.127)*
AVERAGE	0.68	(0.011)
O-1	0.004	(6.25×10^{-5})
O-2	0.002	(3.1×10^{-5})
O-3	0.006	(9.3×10^{-5})
AVERAGE	0.004	(6.2×10^{-5})

* Results for this run not included in average; it is suspected that the probe may have contacted the duct wall during testing.

Discussion of Chromium Samples

Following completion of each sampling run, chromium samples were recovered and analyzed on-site for Cr^{+6} using the diphenylcarbazide method (see Appendix D). Results of these analyses are summarized in Table 2.

Table 2 shows that Inlet A accounts for more than 96% of the chromium going to the scrubber. This finding is consistent with the layout of the process (see Section 2). Inlet A receives emissions from the large rectangular plating tanks while Inlet B receives emissions from the deep cylindrical tanks. The rectangular tanks account for the majority of surface area and would be expected to account for a proportionately larger share of total emissions to the scrubber.

The total mass of Cr^{+6} sampled and the volumetric flow rates at each sampling location were used to calculate emission concentrations and mass emission rates. The average over three sampling runs results in a mass emission rate 5.99 pounds per hour (lb/hr) at Inlet A and 0.0556 lb/hr at Inlet B. For the outlet, an average mass emission rate of 6.30×10^{-4} lb/hr was calculated with this analysis procedure.

After the completion of on-site sampling and analysis, chromium samples were stored on ice and shipped to the Research Triangle Institute Laboratory. Ion chromatography analyses were employed at this location using a post column reactor to determine Cr^{+6} and total chromium was determined by Ion Chromatography. Results of these analyses are reported in Table 3 (ICP analysis for Cr^{+6}) and Table 4 (IC analysis for total Cr).

These analytical procedures produced results which were highly consistent with the colorimetric results reported on Table 2. All three methods exhibited a high degree of consistency from sample to sample. It is normal for ICP analysis for total chromium to result in lower mass quantitation than are found by IC analysis for Cr^{+6}.

At Inlet A, IC analysis for Cr^{+6} produced an average mass emission rate 6.37 lb/hr while ICP analysis for total Cr resulted in a calculation 6.02 lb/hr. At Inlet B, emission rates were .0558 lb/hr for Cr^{+6} (IC) and .0534 lb/hr for total Cr (ICP). At the outlet, emission rates were 4.12×10^{-4} lb/hr for Cr^{+6} (IC) and 4.34×10^{-4} lb/hr for total Cr (ICP).

Summary of Scrubber Removal Efficiencies

Chromium removal efficiencies for the scrubber system were determined by simultaneously sampling the two inlets and the outlet of the scrubber to determine the mass emission rate at each location. Capture efficiency is represented by the equation:

$$CE = \frac{Ci - Co}{Ci} \times 100$$

where: CE = % Capture Efficiency
Ci = Sum of mass emission rates at inlets to scrubber
Co = Mass emission rate at the scrubber outlet

Mass emission rates for the three analytical procedures presented in Tables 2, 3, and 4 are discussed above. The resultant removal efficiencies are reported in Table 5. Once again the various analytical procedures produced highly comparable results. It is also apparent that the scrubber performed at a high level of efficiency during the test. All of the analysis procedures resulted in chromium removal efficiencies of greater than 99.9%.

Plating Tank Solution and Scrubber Rinse

During each sampling run, grab samples of the plating solution were obtained from plating tanks 1-6 and a sample of rinsewater was obtained from the scrubber. During the final run, scrubber samples were taken during the beginning, middle, and end of the sampling period. These samples were analyzed on-site for Cr^{+6} and the resultant concentrations are summarized in Table 6. The scrubber water samples were also shipped out for Ion Chromatography analysis. These results are summarized in Table 7.

TABLE 1
SUMMARY OF STACK GAS CONDITIONS

INLET A

Run No.	Velocity fps[a]	Temp. °F	Flow Rate acfm[b]	Flow Rate dscfm[c]	Moisture %	% Isokinetic Variation
1	40.79	75	13,246.3	12,424.8	0.78	95.98
2	40.89	71	13,278.9	12,504.4	1.17	95.11
3	42.38	69	13,760.0	12,999.7	1.19	95.86
Average	41.02	72	13,428.4	12,643.0	1.05	95.65

INLET B

Run No.	Velocity fps[a]	Temp. °F	Flow Rate acfm[b]	Flow Rate dscfm[c]	Moisture %	% Isokinetic Variation
1	43.88	75	10,468.8	9,779.5	1.21	98.10
2	44.07	74	10,513.1	9,781.0	1.35	96.92
3	45.33	69	10,815.2	10,144.1	1.31	91.44
Average	44.43	73	10,599.0	9,901.5	1.29	95.49

OUTLET

Run No.	Velocity fps[a]	Temp. °F	Flow Rate acfm[b]	Flow Rate dscfm[c]	Moisture %	% Isokinetic Variation
1	38.23	72	25,647.0	24,012.8	1.74	99.04
2	37.69	72	25,282.3	23,674.2	1.93	98.93
3	38.62	69	25,910.2	24,381.3	1.97	99.82
Average	38.18	71	25,613.2	24,022.8	1.88	99.26

[a]Feet per second at stack conditions
[b]Actual cubic feet per minute at stack conditions
[c]Dry standard cubic feet per minute at 68°F and 29.92" Hg

TABLE 2
COLORIMETRIC ANALYSIS OF HEXAVALENT CHROMIUM EMISSIONS

INLET A

Run No.	Total Mass Sampled ug[a]	Emission Concentration lb/dscf[b]	Mass Emission Rate lb/hr[c]	Grain/Dscf	Gram/Dscm
1	1,372,008.00	9.58×10^{-6}	7.14	6.71×10^{-2}	1.53×10^{-1}
2	919,228.20	6.43×10^{-6}	4.83	4.50×10^{-2}	1.03×10^{-1}
3[d]	1,266,384.00	8.46×10^{-6}	6.60	5.92×10^{-2}	1.35×10^{-1}
Average	--	--	5.99		

INLET B

Run No.	Total Mass Sampled ug[a]	Emission Concentration lb/dscf[b]	Mass Emission Rate lb/hr[c]	Grain/Dscf	Gram/Dscm
1	9,375.00	7.08×10^{-8}	0.0416	4.96×10^{-4}	1.13×10^{-3}
2	15,489.60	1.18×10^{-7}	0.0695	8.26×10^{-4}	1.89×10^{-3}
3[d]	127,694.00	9.99×10^{-7}	0.067	6.99×10^{-3}	1.60×10^{-2}
Average	--	--	0.0556		

OUTLET

Run No.	Total Mass Sampled ug[a]	Emission Concentration lb/dscf[b]	Mass Emission Rate lb/hr[c]	Grain/Dscf	Gram/Dscm
1	41.20	3.42×10^{-10}	4.92×10^{-4}	2.39×10^{-6}	5.47×10^{-6}
2	64.10	5.40×10^{-10}	7.67×10^{-4}	3.80×10^{-6}	8.69×10^{6}
3[d]	29.50	2.39×10^{-10}	3.50×10^{-4}	1.67×10^{-6}	3.83×10^{-6}
Average	--	--	6.30×10^{-4}		

[a]Micrograms of hexavalent chromium
[b]Pounds per dry standard cubic foot at 68°F and 29.92" Hg
[c]Pounds per hour
[d] This run omitted from average. It is suspected that the probe touched the stack wall during testing.

TABLE 3
ICP ANALYSIS OF TOTAL CHROMIUM EMISSIONS

INLET A

Run No.	Total Mass Sampled ug[a]	Emission Concentration lb/dscf[b]	Mass Emission Rate lb/hr[c]	Grain/Dscf	Gram/Dscm
1	1,338,000	9.34×10^{-6}	6.96	6.54×10^{-2}	1.50×10^{-1}
2	968,000	6.78×10^{-6}	5.08	4.74×10^{-2}	1.09×10^{-1}
3[d]	1,248,033	8.34×10^{-6}	6.50	5.84×10^{-2}	1.34×10^{-1}
Average	--	--	6.02		

INLET B

Run No.	Total Mass Sampled ug[a]	Emission Concentration lb/dscf[b]	Mass Emission Rate lb/hr[c]	Grain/Dscf	Gram/Dscm
1	9,000	6.80×10^{-8}	0.0399	4.77×10^{-4}	1.09×10^{-3}
2	14,900	1.14×10^{-7}	0.0669	7.98×10^{-4}	1.83×10^{-3}
3[d]	124,254	9.71×10^{-7}	0.5910	6.80×10^{-3}	1.56×10^{-2}
Average	--	--	0.0534		

OUTLET

Run No.	Total Mass Sampled ug[a]	Emission Concentration lb/dscf[b]	Mass Emission Rate lb/hr[c]	Grain/Dscf	Gram/Dscm
1	47.00	3.90×10^{-10}	5.62×10^{-4}	2.73×10^{-6}	6.24×10^{-6}
2	25.50	2.15×10^{-10}	3.05×10^{-4}	1.51×10^{-6}	3.44×10^{-6}
3[d]	65.50	5.31×10^{-10}	7.77×10^{-4}	3.71×10^{-6}	8.50×10^{-6}
Average	--	--	4.34×10^{-4}		

[a]Micrograms of hexavalent chromium
[b]Pounds per dry standard cubic foot at 68°F and 29.92" Hg
[c]Pounds per hour
[d] This run omitted from average. It is suspected that the probe touched the stack wall during testing.

TABLE 4
ION CHROMATOGRAPHY ANALYSIS OF HEXAVALENT CHROMIUM EMISSIONS

INLET A

Run No.	Total Mass Sampled ug[a]	Emission Concentration lb/dscf[b]	Mass Emission Rate lb/hr[c]
1	1,390,000	9.70×10^{-6}	7.23
2	1,050,000	7.35×10^{-6}	5.51
3[d]	1,350,030	9.02×10^{-6}	7.04
Average	--	--	6.37

INLET B

Run No.	Total Mass Sampled ug[a]	Emission Concentration lb/dscf[b]	Mass Emission Rate lb/hr[c]
1	9,850	7.44×10^{-8}	0.0437
2	15,100	1.15×10^{-7}	0.0678
3[d]	135,258	1.06 X 106	0.6430
Average	--	--	0.0558

OUTLET

Run No.	Total Mass Sampled ug[a]	Emission Concentration lb/dscf[b]	Mass Emission Rate lb/hr[c]
1	43.30	3.59×10^{-10}	5.18×10^{-4}
2	25.50	2.15×10^{-10}	3.05×10^{-4}
3[d]	66.80	5.42×10^{-10}	7.92×10^{-4}
Average	--	--	4.12×10^{-4}

[a]Micrograms of hexavalent chromium
[b]Pounds per dry standard cubic foot at 68°F and 29.92" Hg
[c]Pounds per hour
[d] This run omitted from average. It is suspected that the probe touched the stack wall during testing.

TABLE 5
SUMMARY OF CHROMIUM REMOVAL EFFICIENCIES

Cr^{+6} - Colorimetric Analysis

	Mass Emission Rate lb/hr	Removal Efficiency %
Run No. 1 Inlet Outlet	 7.1816 0.000492	 99.9931
Run No. 2 Inlet Outlet	 4.8995 0.000767	 99.9843
Run No. 3[a] Inlet Outlet	 7.207 0.000350	 99.9951
Average Removal Efficiency (Colorimetric Analysis): 99.9887%		

Cr^{+6} - Ion Chromatography

	Mass Emission Rate lb/hr	Removal Efficiency %
Run No. 1 Inlet Outlet	 7.274 0.000518	 99.9929
Run No. 2 Inlet Outlet	 5.578 0.000305	 99.9945
Run No. 3[a] Inlet Outlet	 7.683 0.000792	 99.9897
Average Removal Efficiency (IC Analysis): 99.9937%		

[a] This run omitted from average. It is suspected that the probe touched the stack wall during testing.

TABLE 5 (continued)
SUMMARY OF CHROMIUM REMOVAL EFFICIENCIES

Total Cr - ICP Analysis

	Mass Emission Rate lb/hr	Removal Efficiency %
Run No. 1		
Inlet	7.000	
Outlet	0.000562	99.9919
Run No. 2		
Inlet	5.150	
Outlet	0.000305	99.9941
Run No 3*		
Inlet	7.091	
Outlet	0.000777	99.9891
Average Removal Efficiency (ICP Analysis): 99.9930%		

* This run omitted from average. It is suspected that the probe touched the stack wall during testing.

TABLE 6
COLORIMETRIC ANALYSIS OF PLATING SOLUTIONS AND SCRUBBER WATER

	Concentration of Cr^{+6} (ug/ml)		
	Run #1	Run #2	Run #3
Plating Task #1	125,592	125,319	118,724
Plating Task #2	125,592	121,098	119,779
Plating Task #3	125,592	126,638	116,085
Plating Task #4	126,928	122,681	120,834
Plating Task #5	128,264	122,681	121,362
Plating Task #6	125,592	125,319	126,111
Scrubber Composite (Rinse Water)	12,078	4,876	16,674
Scrubber Start			17,102
Scrubber Middle			14,774
Scrubber End			19,840

TABLE 7
COMPARATIVE ANALYSIS OF SCRUBBER RINSEATE

Scrubber Rinseate	Concentration (ug/ml)		
	Cr^{+6} (colorimetric)	Cr^{+6} (IC)	Total Cr (ICP)
Run #1 Composite	12,078	14,700	12,450
Run #2 Composite	4,876	4,490	5,200
Run #3 Composite	16,674	16,220	17,500
Run #4 Start	17,102	17,450	18,500
Run #5 Middle	14,774	14,400	13,400
Run #6 End	19,840	19,600	18,900

April 29, 1993

NOTE:

Attached is an addendum to the source test at the electroplating facility in Seattle, Washington.

Frank R. Clay

ADDENDUM FOR THE U.S. ENVIRONMENTAL PROTECTION AGENCY TEST REPORT FOR THE DECEMBER 1991 SOURCE TEST AT THE PRECISION ENGINEERING, INC. ELECTROPLATING FACILITY IN SEATTLE, WASHINGTON

At the request of Midwest Research Institute, this addendum has been prepared for the Precision Engineering Test Report. The changes are minor and correct field data and calculations found in the report.

After the first run of the source test, it was discovered that the thermocouple indicator readings used to determine inlet and outlet stack temperatures were biased about 20 degrees F too high. For the remaining runs, dial thermometers were used for stack temperature readings.

In the original version of the test report stack temperatures obtained from the thermocouple were used in the data reduction for Run 1. For this addendum, the average stack temperatures from Runs 2 and 3 are used in the reduction of the data from Run 1. Changes were made throughout Chapter 3 wherever the corrected temperatures had an effect.

This addendum is composed of two parts: (1) revisions to Chapter 3 and (2) computer print outs. The addendum for Chapter 3 contains the entire chapter and completely replaces the original Chapter 3. The new computer print outs replace the original print outs for Run 1 data from both the inlet and the outlet locations. For reports with appendices, replace both Chapter 3 and the computer print out sheets; for reports without appendices only Chapter 3 need be replaced.

PLANT- PRECISION ENGINEERING
DATE- DECEMBER 17, 1991
LOCATION-SEATTLE, WASHINGTON
RUN- 0-1 Cr VI

INITIAL DATA VALUES

DIA. OF STACK OR CROSS SECTION
30.0000 IN. OR 0.0000 L 0.0000 W IN.

CATCH

FROUNT HALF	146.0000 ug.
BACK HALF	0.0000 ug.
TOTAL	146.0000 ug.

BAROMETRIC PRESSURE Pbar 30.01 in. Hg	Ym METER CORRECTION FACTOR 0.9910
STACK STATIC PRESSURE Pst 0.20 in. HOH	NET TIME OF TEST Tt 360 min.
ESTIMATED % MOISTURE 1.0	PITOT COEFFICIENT 0.84
DIA. OF NOZZLE 0.2480 in.	Vw TOTAL H2O COLLECTED 77.00 ml
METER DELTA H@ 1.8260 in. HOH	Np # OF POINTS 72

%CO2	%O2	%N2
0.70	21.00	78.30

CALCULATED VALUES

Milligrams/Dry Std. Cubic Meter = 0.0139

Grains/Dry Std. Cubic Ft. = 6.09E-06

Lbs./Hour = 7.449E-04 Kilograms/Hour = 3.379E-04

ACFM	DSCFM
14474.42	14271.74

Vw gas 3.6267 CF	Vm Std. 370.0069 CF	STACK GAS PRESSURE Ps 30.0247 in. HOH
TRUE % M 0.9707	AVE. DELTA P 0.7671 in. HOH	Md MOL WT. OF STACK GAS 28.9520
Md 0.9900	AVE. DELTA H 3.63 in. HOH	AVE. SQRT DELTA P 20.1391
Bws(est) 0.0100	AVE. Ts 72 F	PER CENT ISOKINETIC %I 105.4450
Vm TOTAL 373.8870 CF	AVE. Tm 75 F	Vs STACK GAS VELOCITY 49.1451 f/s

MW MOL. WT. OF STACK GAS WET= 28.8425

LEAK CHECK

GAS METER READING

	START	STOP	COMENTS
1	0.0000	0.0000	
2	0.0000	0.0000	
3	0.0000	0.0000	
4	0.0000	0.0000	
5	0.0000	0.0000	

PLANT- PRECISION ENGINEERING
DATE- DECEMBER 17, 1991
LOCATION-SEATTLE, WASHINGTON
RUN- O-1 Total Cr

INITIAL DATA VALUES

DIA. OF STACK OR CROSS SECTION
30.0000 IN. OR 0.0000 L 0.0000 W IN.

CATCH
FROUNT HALF 137.0000 ug.
BACK HALF 0.0000 ug.
TOTAL 137.0000 ug.

BAROMETRIC PRESSURE Pbar: 30.01 in. Hg
Vm METER CORRECTION FACTOR: 0.9910
STACK STATIC PRESSURE Pst: 0.20 in. HOH
NET TIME OF TEST Tt: 360 min.
ESTIMATED % MOISTURE: 1.0
PITOT COEFFICIENT: 0.84
DIA. OF NOZZLE: 0.2480 in.
Vw TOTAL H2O COLLECTED: 77.00 ml
METER DELTA H@: 1.8260 in. HOH
Np # OF POINTS: 72

%CO2 0.70
%O2 21.00
%N2 78.30

CALCULATED VALUES

Milligrams/Dry Std. Cubic Meter = 0.0131
Grains/Dry Std. Cubic Ft. = 5.71E-06
Lbs./Hour = 6.990E-04
Kilograms/Hour = 3.171E-04

AFCM 14474.42
DSCFM 14271.74

Vw gas 3.6267 CF
Vm Std. 370.0069 CF
STACK GAS PRESSURE Ps 30.0247 in. HOH
TRUE % M 0.9707
AVE. DELTA P 0.7671 in. HOH
MWd MOL WT. OF STACK GAS 28.9520
Md 0.9900
AVE. DELTA H 3.63 in. HOH
AVE. SQRT DELTA P 20.1391
Bws(est) 0.0100
AVE. Ts 72 F
PER CENT ISOKINETIC %I 105.4450
Vm TOTAL 373.8870 CF
AVE. Tm 75 F
Vs STACK GAS VELOCITY 49.1451 f/s
MW MOL. WT. OF STACK GAS WET= 28.8425

|| LEAK CHECK ||

GAS METER READING

	START	STOP	COMENTS
1	0.0000	0.0000	
2	0.0000	0.0000	
3	0.0000	0.0000	
4	0.0000	0.0000	
5	0.0000	0.0000	

==========
RUN DATA
==========

PLANT- PRECISION ENGINEERING
DATE- DECEMBER 17, 1991
LOCATION-SEATTLE, WASHINGTON
RUN- O-1 Cr VI

POINT #		TIME	GAS METER READING	VELOCITY DELTA P	ORIFICE PRESSURE ACTUAL	ORIFICE PRESSURE DESIRED	STACK TEMP	DRY GAS METER TEMP. IN	DRY GAS METER TEMP. OUT	%I PER POINT	COMMENTS
A	1	0.00	474.035	0.83	3.90	3.15	72	39	38	108.0	
		5.00	479.200	0.84	4.00	3.21	72	45	39	107.3	
		10.00	484.400	0.84	4.00	3.23	72	51	40	102.5	
A	2	15.00	489.400	0.82	3.90	3.17	72	56	42	113.3	
		20.00	494.900	0.83	3.90	3.23	72	60	44	105.8	
		25.00	500.100	0.82	3.90	3.21	72	63	46	105.9	
A	3	30.00	505.300	0.81	3.80	3.18	72	66	48	104.0	
		35.00	510.400	0.81	3.80	3.20	72	68	50	105.6	
		40.00	515.600	0.80	3.80	3.17	72	70	53	105.8	
A	4	45.00	520.800	0.80	3.80	3.18	72	71	54	103.6	
		50.00	525.900	0.76	3.60	3.03	72	73	57	105.7	
		55.00	531.000	0.76	3.60	3.04	72	74	58	103.4	
A	5	60.00	536.000	0.72	3.40	2.89	72	76	59	105.9	
		65.00	541.000	0.72	3.40	2.89	72	76	60	179.9	
		70.00	549.500	0.72	3.40	2.90	72	77	62	50.6	
A	6	75.00	551.900	0.68	3.20	2.75	72	78	64	82.2	
		80.00	555.700	0.66	3.10	2.67	72	78	65	105.3	
		85.00	560.500	0.66	3.10	2.67	72	80	66	100.6	
A	7	90.00	565.100	0.58	2.70	2.35	72	80	67	109.5	
		95.00	569.800	0.61	2.80	2.47	72	80	67	104.5	
		100.00	574.400	0.60	2.80	2.44	72	80	68	107.6	
A	8	105.00	579.100	0.66	3.10	2.69	72	82	69	100.2	
		110.00	583.700	0.64	3.00	2.61	72	82	70	110.4	
		115.00	588.700	0.64	3.00	2.61	72	82	71	103.7	
A	9	120.00	593.400	0.66	3.10	2.69	72	83	71	108.6	
		125.00	598.400	0.66	3.10	2.70	72	83	72	95.5	
		130.00	602.800	0.66	3.10	2.70	72	83	72	110.6	
A	10	135.00	607.900	0.69	3.20	2.82	72	84	72	101.8	
		140.00	612.700	0.65	3.08	2.66	72	85	73	115.5	
		145.00	618.000	0.65	3.08	2.68	72	85	79	86.7	
A	11	150.00	622.000	0.69	3.20	2.83	72	85	74	116.3	
		155.00	627.500	0.67	3.20	2.75	72	86	74	105.1	
		160.00	632.400	0.66	3.10	2.71	72	86	74	108.0	
A	12	165.00	637.400	0.69	3.20	2.83	72	85	75	97.2	
		170.00	642.000	0.70	3.30	2.88	72	86	75	113.2	
		175.00	647.400	0.67	3.20	2.75	72	86	75	109.5	
B	1	180.00	652.510	1.10	5.20	4.46	72	73	73	103.7	
		185.00	658.600	1.20	5.70	4.88	72	78	72	105.7	
		190.00	665.100	1.20	5.70	4.90	72	82	73	108.5	
B	2	195.00	671.800	1.10	5.20	4.50	72	84	73	109.6	
		200.00	678.300	1.00	4.74	4.10	72	86	73	107.5	
		205.00	684.400	1.00	4.74	4.11	72	86	74	96.9	

B	3	210.00	689.900	0.93	4.40	3.82	72	86	74	109.5
		215.00	695.900	0.93	4.40	3.83	72	87	75	92.9
		220.00	701.000	0.93	4.40	3.83	72	88	76	114.6
B	4	225.00	707.300	0.82	3.90	3.38	72	88	76	98.6
		230.00	712.400	0.83	3.90	3.42	72	88	76	111.5
		235.00	718.200	0.83	3.90	3.42	72	88	76	90.4
B	5	240.00	722.900	0.74	3.50	3.05	72	88	78	119.8
		245.00	728.800	0.74	3.50	3.05	72	88	77	89.4
		250.00	733.200	0.73	3.50	3.01	72	88	77	116.6
B	6	255.00	738.900	0.66	3.10	2.72	72	88	77	107.5
		260.00	743.900	0.69	3.30	2.85	72	88	78	109.3
		265.00	749.100	0.69	3.30	2.84	72	87	77	103.2
B	7	270.00	754.000	0.72	3.40	2.97	72	88	77	113.3
		275.00	759.500	0.72	3.40	2.97	72	87	77	96.9
		280.00	764.200	0.73	3.40	3.01	72	87	77	106.5
B	8	285.00	769.400	0.73	3.40	3.01	72	87	77	104.4
		290.00	774.500	0.75	3.60	3.10	72	88	78	96.8
		295.00	779.300	0.74	3.50	3.05	72	87	77	113.9
B	9	300.00	784.900	0.76	3.60	3.14	72	88	78	104.2
		305.0000	790.100	0.75	3.60	3.10	72	88	78	98.8
		310.0000	795.000	0.75	3.60	3.10	72	88	78	117.0
B	10	315.0000	800.800	0.73	3.50	3.01	72	88	78	104.2
		320.0000	805.900	0.73	3.50	3.01	72	87	78	102.3
		325.0000	810.900	0.74	3.50	3.05	72	87	77	107.8
B	11	330.0000	816.200	0.74	3.50	3.05	72	87	78	105.7
		335.0000	821.400	0.73	3.50	3.01	72	87	77	106.5
		340.0000	826.600	0.74	3.50	3.05	72	86	77	105.9
B	12	345.0000	831.800	0.78	3.70	3.21	72	86	77	105.1
		350.0000	837.100	0.80	3.80	3.29	72	86	77	105.8
		355.0000	842.500	0.81	3.80	3.34	72	86	78	105.5
		360.0000	847.922			0.00				0.0

PLANT- Precision Engineering
DATE- December 17, 1991
LOCATION-Seattle Washington
RUN- Inlet 1-1 Cr VI

INITIAL DATA VALUES

DIA. OF STACK OR CROSS SECTION
24.0000 IN. OR 0.0000 L 0.0000 W IN.

CATCH
FROUNT HALF 2889.0000 ug.
BACK HALF 0.0000 ug.
TOTAL 2889.0000 ug.

BAROMETRIC PRESSURE Pbar: 30.01 in. Hg
Yn METER CORRECTION FACTOR: 0.9780
STACK STATIC PRESSURE Pst: -5.40 in. HOH
NET TIME OF TEST Tt: 360 min.
ESTIMATED % MOISTURE: 1.0
PITOT COEFFICIENT: 0.84
DIA. OF NOZZLE: 0.2480 in.
Vw TOTAL H2O COLLECTED: 72.82 ml
METER DELTA H@: 1.8900 in. HOH
Np # OF POINTS: 73

%CO2 0.70
%O2 21.00
%N2 78.30

CALCULATED VALUES

Milligrams/Dry Std. Cubic Meter = 0.2939
Grains/Dry Std. Cubic Ft. = 1.28E-04
Lbs./Hour = 1.004E-02
Kilograms/Hour = 4.555E-03

ACFM 9344.66
DSCFM 9121.74

Vw gas 3.4298 CF
Vm Std. 347.1130 CF
STACK GAS PRESSURE Ps 29.6129 in. HOH
TRUE % M 0.9784
AVE. DELTA P 0.7747 in. HOH
Msd MOL WT. OF STACK GAS 28.9520
Md 0.9900
AVE. DELTA H 3.65 in. HOH
AVE. SQRT DELTA P 20.1755
Bws(est) 0.0100
AVE. Ts 70 F
PER CENT ISOKINETIC %I 99.0527
Vm TOTAL 350.6830 CF
AVE. Tm 68 F
Vs STACK GAS VELOCITY 49.5750 f/s
Ms MOL. WT. OF STACK GAS WET= 28.8425

|| LEAK CHECK ||

GAS METER READING

	START	STOP	COMMENTS
1	0.0000	0.0000	
2	0.0000	0.0000	
3	0.0000	0.0000	
4	0.0000	0.0000	
5	0.0000	0.0000	

PLANT- Precision Engineering
DATE- December 17, 1991
LOCATION-Seattle Washington
RUN- Inlet 1-1 Total Cr

INITIAL DATA VALUES

DIA. OF STACK OR CROSS SECTION
24.0000 IN. OR 0.0000 L 0.0000 W IN.

CATCH
FROUNT HALF 3029.0000 ug.
BACK HALF 0.0000 ug.
TOTAL 3029.0000 ug.

BAROMETRIC PRESSURE Pbar
30.01 in. Hg

Ym METER CORRECTION FACTOR
0.9780

STACK STATIC PRESSURE Pst
-5.40 in. HOH

NET TIME OF TEST Tt
360 min.

ESTIMATED % MOISTURE
1.0

PITOT COEFFICIENT
0.84

DIA. OF NOZZLE
0.2480 in.

Vw TOTAL H2O COLLECTED
72.82 ml

METER DELTA H@
1.8900 in. HOH

Np # OF POINTS
73

%CO2 %O2 %N2
0.70 21.00 78.30

CALCULATED VALUES

Milligrams/Dry Std. Cubic Meter = 0.3082

Grains/Dry Std. Cubic Ft. = 1.35E-04

Lbs./Hour = 1.053E-02 Kilograms/Hour = 4.776E-03

AFCM 9344.66
DSCFM 9121.74

Vw gas 3.4298 CF
Vm Std. 347.1130 CF
STACK GAS PRESSURE Ps 29.6129 in. HOH

TRUE % M 0.9784
AVE. DELTA P 0.7747 in. HOH
MWd MOL WT. OF STACK GAS 28.9520

Md 0.9900
AVE. DELTA H 3.65 in. HOH
AVE. SQRT DELTA P 20.1755

Bws(est) 0.0100
AVE. Ts 70 F
PER CENT ISOKINETIC %I 99.0527

Vm TOTAL 350.6830 CF
AVE. Tm 68 F
Vs STACK GAS VELOCITY 49.5750 f/s

MW MOL. WT. OF STACK GAS WET= 28.8425

|| LEAK CHECK ||

GAS METER READING

	START	STOP	COMMENTS
1	0.0000	0.0000	
2	0.0000	0.0000	
3	0.0000	0.0000	
4	0.0000	0.0000	
5	0.0000	0.0000	

========
RUN DATA
========

PLANT- Precision Engineering
DATE- December 17, 1991
LOCATION- Seattle Washington
RUN- Inlet 1-1 Cr VI

POINT #		TIME	GAS METER READING	VELOCITY DELTA P	ORIFICE PRESSURE ACTUAL	ORIFICE PRESSURE DESIRED	STACK TEMP	DRY GAS METER TEMP. IN	DRY GAS METER TEMP. OUT	%I PER POINT	COMMENTS
A1	0	0.00	386.718	1.10	5.20	4.25	70	37	36	97.1	
	1	5.00	392.000	1.00	4.70	3.89	70	43	37	114.8	
	2	10.00	398.000	1.00	4.70	3.92	70	48	39	108.3	
	3	15.00	403.700	1.00	4.70	3.95	70	52	41	100.1	
	4	20.00	409.000	1.00	4.70	3.96	70	55	43	105.2	
	5	25.00	414.600	1.00	4.70	3.98	70	58	45	104.7	
A2	0	30.00	420.200	0.98	4.50	3.92	70	60	48	95.8	
	1	35.00	425.300	0.98	4.50	3.94	70	62	49	103.0	
	2	40.00	430.800	0.98	4.50	3.95	70	64	51	95.2	
	3	45.00	435.900	0.98	4.50	3.95	70	64	52	104.4	
	4	50.00	441.500	0.98	4.50	3.97	70	66	54	100.3	
	5	55.00	446.900	0.98	4.50	3.98	70	67	55	100.1	
A3	0	60.00	452.300	0.84	3.98	3.42	70	69	57	105.6	
	1	65.00	457.600	0.84	3.98	3.43	70	69	58	103.5	
	2	70.00	462.800	0.84	3.98	3.43	70	70	59	97.3	
	3	75.00	467.700	0.84	3.98	3.44	70	71	60	99.1	
	4	80.00	472.700	0.84	3.98	3.44	70	71	61	103.0	
	5	85.00	477.900	0.83	3.93	3.41	70	72	62	105.4	
A4	0	90.00	483.200	0.54	2.60	2.22	70	72	63	95.7	
	1	95.00	487.100	0.54	2.60	2.22	70	71	63	105.7	
	2	100.00	491.400	0.58	2.70	2.38	70	71	63	99.6	
	3	105.00	495.600	0.58	2.70	2.38	70	71	63	99.6	
	4	110.00	499.800	0.57	2.70	2.34	70	72	64	97.9	
	5	115.00	503.900	0.57	2.70	2.34	70	72	64	97.9	
A5	0	120.00	508.000	0.55	2.60	2.26	70	72	65	104.4	
	1	125.00	512.300	0.67	3.20	2.76	70	72	65	96.9	
	2	130.00	516.700	0.67	3.20	2.76	70	73	65	101.2	
	3	135.00	521.300	0.67	3.20	2.76	70	74	65	101.1	
	4	140.00	525.900	0.67	3.20	2.77	70	75	66	101.0	
	5	145.00	530.500	0.67	3.20	2.77	70	75	67	98.7	
A6	0	150.00	535.000	0.66	3.10	2.73	70	76	67	99.3	
	1	155.00	539.500	0.65	3.10	2.69	70	76	67	111.2	
	2	160.00	544.500	0.65	3.10	2.69	70	76	68	88.9	
	3	165.00	548.500	0.64	3.00	2.65	70	75	67	100.9	
	4	170.00	553.000	0.64	3.00	2.65	70	75	68	100.8	
	5	175.00	557.500	0.69	3.30	2.86	70	75	68	99.7	
B1	0	180.00	562.118	0.78	3.70	3.19	70	66	65	106.5	
	1	185.00	567.300	0.78	3.70	3.20	70	68	64	96.5	
	2	190.00	572.000	0.78	3.70	3.21	70	71	65	98.2	
	3	195.00	576.800	0.77	3.70	3.17	70	72	65	107.0	
	4	200.00	582.000	0.75	3.50	3.09	70	74	65	93.6	
	5	205.00	586.500	0.77	3.70	3.18	70	74	66	102.6	

B2	0	210.00	591.500	0.88	4.20	3.64	70	76	66	97.8
	1	215.00	596.600	0.90	4.20	3.73	70	76	67	102.3
	2	220.00	602.000	0.87	4.10	3.61	70	77	67	96.2
	3	225.00	607.000	0.87	4.10	3.61	70	78	68	96.1
	4	230.00	612.000	0.87	4.10	3.62	70	78	69	105.6
	5	235.00	617.500	0.87	4.10	3.62	70	79	70	101.5
B3	0	240.00	622.800	0.83	3.90	3.46	70	79	70	98.0
	1	245.00	627.800	0.83	3.90	3.46	70	79	70	94.1
	2	250.00	632.600	0.83	3.90	3.46	70	79	70	101.9
	3	255.00	637.800	0.83	3.90	3.46	70	80	71	95.9
	4	260.00	642.700	0.82	3.90	3.42	70	80	71	84.6
	5	265.00	647.000	0.83	3.90	3.46	70	80	71	117.4
B4	0	270.00	653.000	0.83	3.90	3.46	70	80	71	97.8
	1	275.00	658.000	0.85	4.00	3.55	70	80	71	96.7
	2	280.00	663.000	0.85	4.00	3.55	70	80	71	96.7
	3	285.00	668.000	0.86	4.10	3.59	70	80	71	101.9
	4	290.00	673.300	0.86	4.10	3.59	70	80	71	96.2
	5	295.00	678.300	0.86	4.10	3.59	70	80	71	109.6
B5	0	300.00	684.000	0.86	4.10	3.59	70	80	71	96.2
	1	305.0000	689.000	0.62	2.90	2.59	70	80	71	94.9
	2	310.0000	693.200	0.62	2.90	2.58	70	79	71	104.0
	3	315.0000	697.800	0.62	2.90	2.58	70	79	71	97.2
	4	320.0000	702.100	0.62	2.90	2.58	70	78	71	99.6
	5	325.0000	706.500	0.63	3.00	2.62	70	78	71	98.8
B6	0	330.0000	710.900	0.63	3.00	2.62	70	78	71	98.8
	1	335.0000	715.300	0.62	2.90	2.58	70	78	70	99.6
	2	340.0000	719.700	0.63	3.00	2.62	70	77	70	99.0
	3	345.0000	724.100	0.62	2.90	2.58	70	77	70	102.0
	4	350.0000	728.600	0.63	3.00	2.62	70	76	70	96.8
	5	355.0000	732.900	0.63	3.00	2.61	70	76	69	101.4
	6	360.0000	737.401	0.63	3.00	2.60	70	72	68	0.0

PLANT- Precision Engineering
DATE- December 18, 1991
LOCATION-Seattle, Washington
RUN- Inlet 2-1 Cr VI

INITIAL DATA VALUES

DIA. OF STACK OR CROSS SECTION
18.0000 IN. OR 0.0000 L 0.0000 W IN.

CATCH
FRONT HALF 1589.0000 ug.
BACK HALF 0.0000 ug.
TOTAL 1589.0000 ug.

BAROMETRIC PRESSURE Pbar: 30.01 in. Hg
Vm METER CORRECTION FACTOR: 0.9790
STACK STATIC PRESSURE Pst: -5.70 in. HOH
NET TIME OF TEST Tt: 360 min.
ESTIMATED % MOISTURE: 0.7
PITOT COEFFICIENT: 0.84
DIA. OF NOZZLE: 0.2490 in.
Vw TOTAL H2O COLLECTED: 53.03 ml
METER DELTA H@: 1.9470 in. HOH
Np # OF POINTS: 72

%CO2	%O2	%N2
0.70	21.00	78.30

CALCULATED VALUES

Milligrams/Dry Std. Cubic Meter = 0.1526
Grains/Dry Std. Cubic Ft. = 6.67E-05
Lbs./Hour = 3.031E-03
Kilograms/Hour = 1.375E-03

ACFM	DSCFM
5408.34	5301.38

Vw gas	Vm Std.	STACK GAS PRESSURE Ps
2.4977 CF	367.6283 CF	29.5909 in. HOH
TRUE % H	AVE. DELTA P	MWd MOL WT. OF STACK GAS
0.6748	0.8414 in. HOH	28.9520
Md	AVE. DELTA H	AVE. SQRT DELTA P
0.9930	3.98 in. HOH	20.7629
Bws(est)	AVE. Ts	PER CENT ISOKINETIC %I
0.0070	69 F	100.7210
Vm TOTAL	AVE. Tm	Vs STACK GAS VELOCITY
369.6190 CF	66 F	51.0083 f/s

MW MOL. WT. OF STACK GAS WET= 28.8753

|| LEAK CHECK ||

GAS METER READING

	START	STOP	COMMENTS
1	0.0000	0.0000	
2	0.0000	0.0000	
3	0.0000	0.0000	
4	0.0000	0.0000	
5	0.0000	0.0000	

PLANT- Precision Engineering
DATE- December 18, 1991
LOCATION-Seattle, Washington
RUN- Inlet 2-1 Total Cr

INITIAL DATA VALUES

DIA. OF STACK OR CROSS SECTION
18.0000 IN. OR 0.0000 L 0.0000 W IN.

CATCH
FROUNT HALF 1573.0000 ug.
BACK HALF 0.0000 ug.
TOTAL 1573.0000 ug.

BAROMETRIC PRESSURE Pbar: 30.01 in. Hg
Ym METER CORRECTION FACTOR: 0.9790

STACK STATIC PRESSURE Pst: -5.70 in. HOH
NET TIME OF TEST Tt: 360 min.

ESTIMATED % MOISTURE: 0.7
PITOT COEFFICIENT: 0.84

DIA. OF NOZZLE: 0.2490 in.
Vw TOTAL H2O COLLECTED: 53.03 ml

METER DELTA H@: 1.9470 in. HOH
Np # OF POINTS: 72

%CO2: 0.70
%O2: 21.00
%N2: 78.30

CALCULATED VALUES

Milligrams/Dry Std. Cubic Meter = 0.1511

Grains/Dry Std. Cubic Ft. = 6.60E-05

Lbs./Hour = 3.000E-03
Kilograms/Hour = 1.361E-03

ACFM: 5408.34
DSCFM: 5301.38

Vw gas: 2.4977 CF
Vm Std.: 367.6283 CF
STACK GAS PRESSURE Ps: 29.5909 in. HOH

TRUE % M: 0.6748
AVE. DELTA P: 0.8414 in. HOH
MWd MOL WT. OF STACK GAS: 28.9520

Md: 0.9930
AVE. DELTA H: 3.98 in. HOH
AVE. SQRT DELTA P: 20.7629

Bws(est): 0.0070
AVE. Ts: 69 F
PER CENT ISOKINETIC %I: 100.7210

Vm TOTAL: 369.6190 CF
AVE. Tm: 66 F
Vs STACK GAS VELOCITY: 51.0083 f/s

MW MOL. WT. OF STACK GAS WET= 28.8753

LEAK CHECK

GAS METER READING

	START	STOP	COMMENTS
1	0.0000	0.0000	
2	0.0000	0.0000	
3	0.0000	0.0000	
4	0.0000	0.0000	
5	0.0000	0.0000	

========
RUN DATA
========

PLANT- Precision Engineering
DATE- December 18, 1991
LOCATION- Seattle, Washington
RUN- Inlet 2-1 Total Cr

POINT #		TIME	GAS METER READING	VELOCITY DELTA P	ORIFICE PRESSURE ACTUAL	ORIFICE PRESSURE DESIRED	STACK TEMP	DRY GAS METER TEMP. IN	DRY GAS METER TEMP. OUT	%I PER POINT	COMMENTS
A1	0	0.0000	269.99	0.80	3.70	3.25	69	36	36	67.5	
	1	5.0000	273.20	0.78	3.80	3.18	69	38	35	108.4	
	2	10.0000	278.30	0.78	3.80	3.20	69	44	36	107.6	
	3	15.0000	283.40	0.78	3.80	3.22	69	49	38	104.8	
	4	20.0000	288.40	0.78	3.80	3.24	69	52	40	106.3	
	5	25.0000	293.50	0.78	3.70	3.25	69	54	42	103.8	
A2	0	30.0000	298.50	0.55	2.60	2.30	69	57	44	108.0	
	1	35.0000	302.90	0.57	2.70	2.39	69	58	46	105.8	
	2	40.0000	307.30	0.55	2.60	2.31	69	59	47	102.6	
	3	45.0000	311.50	0.56	2.65	2.36	69	60	49	103.8	
	4	50.0000	315.80	0.55	2.60	2.33	69	61	50	104.5	
	5	55.0000	320.10	0.55	2.60	2.33	69	62	51	104.3	
A3	0	60.0000	324.40	0.38	1.80	1.61	69	63	52	107.6	
	1	65.0000	328.10	0.37	1.75	1.57	69	63	54	102.9	
	2	70.0000	331.60	0.37	1.75	1.58	69	64	55	108.6	
	3	75.0000	335.30	0.36	1.71	1.54	69	64	56	118.9	
	4	80.0000	339.30	0.36	1.71	1.54	69	67	58	88.7	
	5	85.0000	342.30	0.36	1.71	1.54	69	65	57	103.8	
A4	0	90.0000	345.80	0.95	4.50	4.07	69	66	58	99.1	
	1	95.0000	351.20	0.97	4.60	4.17	69	69	59	103.1	
	2	100.0000	356.90	0.98	4.65	4.22	69	70	60	100.6	
	3	105.0000	362.50	0.98	4.65	4.22	69	71	60	102.3	
	4	110.0000	368.20	0.96	4.55	4.15	69	72	61	103.2	
	5	115.0000	373.90	0.96	4.55	4.15	69	73	62	103.0	
A5	0	120.0000	379.60	1.50	7.10	6.50	69	73	63	93.0	
	1	125.0000	386.00	1.10	5.21	4.77	69	74	64	102.8	
	2	130.0000	392.10	1.20	5.69	5.21	69	74	64	100.2	
	3	135.0000	398.30	1.20	5.69	5.22	69	75	65	100.0	
	4	140.0000	404.50	1.20	5.69	5.22	69	76	65	103.1	
	5	145.0000	410.90	1.10	5.20	4.79	69	76	66	99.1	
A6	0	150.0000	416.80	1.10	5.20	4.80	69	77	66	102.3	
	1	155.0000	422.90	1.40	6.60	6.11	69	77	67	93.9	
	2	160.0000	429.20	1.40	6.60	6.12	69	78	68	84.8	
	3	165.0000	434.90	1.40	6.60	6.12	69	77	68	74.5	
	4	170.0000	439.90	1.40	6.60	6.12	69	77	68	105.7	
	5	175.0000	447.00	1.40	6.60	6.12	69	78	68	89.9	
B1	0	180.0000	453.05	0.65	3.10	2.80	69	65	65	108.9	
	1	185.0000	458.00	1.10	5.20	4.76	69	69	65	93.0	
	2	190.0000	463.50	1.10	5.20	4.77	69	72	65	101.2	
	3	195.0000	469.50	1.10	5.20	4.78	69	74	65	102.7	
	4	200.0000	475.60	1.10	5.20	4.79	69	75	66	100.8	
	5	205.0000	481.60	1.10	5.20	4.79	69	76	66	102.4	

B2	0	210.0000	487.70	1.10	5.20	4.79	69	76	66	100.7
	1	215.0000	493.70	1.10	5.20	4.80	69	77	67	100.5
	2	220.0000	499.70	1.10	5.20	4.80	69	78	67	102.1
	3	225.0000	505.80	1.10	5.20	4.81	69	78	68	102.0
	4	230.0000	511.90	1.10	5.20	4.81	69	79	68	101.9
	5	235.0000	518.00	1.10	5.20	4.82	69	79	69	100.2
B3	0	240.0000	524.00	0.83	3.90	3.64	69	80	69	107.2
	1	245.0000	529.60	0.79	3.70	3.46	69	79	70	102.0
	2	250.0000	534.80	0.79	3.70	3.46	69	79	70	98.1
	3	255.0000	539.80	0.78	3.70	3.42	69	79	70	106.6
	4	260.0000	545.20	0.79	3.70	3.46	69	79	70	98.1
	5	265.0000	550.20	0.77	3.60	3.38	69	79	70	91.3
B4	0	270.0000	554.80	0.52	2.40	2.28	69	78	70	130.2
	1	275.0000	560.20	0.50	2.40	2.19	69	77	70	105.9
	2	280.0000	564.50	0.50	2.40	2.19	69	77	70	103.4
	3	285.0000	568.70	0.50	2.40	2.19	69	76	70	101.0
	4	290.0000	572.80	0.50	2.40	2.18	69	76	69	103.6
	5	295.0000	577.00	0.50	2.40	2.18	69	76	69	106.1
B5	0	300.0000	581.30	0.62	2.90	2.71	69	76	69	90.9
	1	305.0000	585.40	0.74	3.50	3.23	69	76	69	99.6
	2	310.0000	590.30	0.74	3.50	3.24	69	77	69	101.5
	3	315.0000	595.30	0.75	3.50	3.28	69	77	69	100.9
	4	320.0000	600.30	0.75	3.50	3.28	69	77	69	100.9
	5	325.0000	605.30	0.71	3.30	3.10	69	77	69	101.5
B6	0	330.0000	610.20	0.71	3.30	3.10	69	77	69	101.5
	1	335.0000	615.10	0.71	3.30	3.10	69	77	69	101.5
	2	340.0000	620.00	0.71	3.30	3.10	69	76	68	101.7
	3	345.0000	624.90	0.75	3.50	3.28	69	76	69	101.0
	4	350.0000	629.90	0.70	3.30	3.05	69	75	68	100.5
	5	355.0000	634.70	0.74	3.50	3.23	69	75	68	99.9
	6	360.0000	639.60			0.00			Addl	0.0

Section 3

SUMMARY OF SAMPLE COLLECTION, EMISSION CALCULATIONS AND RESULTS

3.1 Sample Collection

Emission samples were collected using a modification of U.S. EPA Method 13-B. The samples were collected simultaneously from Inlets No. 1 and No. 2 and from the Outlet of the MPME under normal operating conditions. Three tests were conducted at each sampling location. Sampling times of 4 or 6 hours per test run were used to ensure that adequate quantities of chromium were collected for subsequent chemical analysis.

Grab samples from the plating tank solutions (Tanks 1, 2 and 7) and the MPME water were also collected during each sampling run. These samples were obtained at the beginning, middle and at the end of each Method 13-B test run.

3.2 Stack Gas Parameters

Stack gas parameters, at each sampling location, are shown in Table 3-1. At Inlet No. 1, the stack gas velocity averaged48.92feet per second (fps), the average stack temperature was 70°F and the average moisture content was 1.11%. The volumetric flow rates at Inlet No. 1 were 9473 actual cubic feet per minute (acfm) and 9254 dry standard cubic feet per minute (dscfm). At Inlet No. 2, the stack gas velocity averaged49.96fps, the average stack temperature was 69°F and the average moisture content was 0.75%. The volumetric flow rates at Inlet No. 2 were 52.97 acfm and 5198 dscfm.

At the Outlet, the stack gas velocities averaged 49.53 fps, the average stack temperature was 72°F and the average moisture content was 0.98%. The average volumetric flow rates at the Outlet were 14588 acfm and 14406 dscfm.

The stack gas at all sampling locations was essentially ambient air and thus was assigned a dry molecular weight of 28.95 lb/lb-mole. Variation in isokinetic sampling rates were within allowable limits for all sampling runs of Method 13-B except Run 2 of Inlet 2 which had an isokinetic rate of 88.81%.

The evaluation of particle size, from previous test runs, indicate that more than 85% of the particles emitted from a controlled electroplating process are less than 2.5 microns in diameter. Particles less than 2.5 microns behave like a gas rather than a particulate. In gaseous sampling the isokinetic sampling rate is not considered to be significant. Therefore, no adjustments were made to the data and the results are acceptable.

3.3 Emission Calculations and Discussion of Results

This subsection of the report provides the following information: 1) Cr-VI results from colorimetry and ICPCR analyses; 2) Cr-T results from ICP analysis; 3) Cr-VI and Cr-T concentrations in the plating tank solutions, MPME water and sampling train blank samples; 4) computerized spreadsheet calculations of emission concentrations and mass emission rates; 5) MPME removal efficiencies; and 6) MPME penetration.

Table 3.1 SUMMARY OF STACK GAS CONDITIONS

Inlet No.1

Run No.	Velocity fps[a]	Stack Temp. °F	Flow Rate		Moisture %	% Isokinetic Rate
			acfm[b]	dscfm[c]		
1	45.58	70	9345	9122	0.98	99.05
2	48.53	69	9,148	8,830	1.14	98.99
3	52.66	70	9,927	9,810	1.21	93.32
Average	48.92	70	9473	9254	1.11	97.12

Inlet No. 2

Run No.	Velocity fps[a]	Stack Temp. °F	Flow Rate		Moisture %	% Isokinetic Rate
			acfm[b]	dscfm[c]		
1	51.01	69	5408	5301	0.67	100.72
2	52.02	70	5,516	5,350	0.65	88.81
3	46.85	68	4,968	4,943	0.94	98.37
Average	49.96	69	5297	5198	0.75	95.97

Outlet

Run No.	Velocity fps[a]	Stack Temp. °F	Flow Rate		Moisture %	% Isokinetic Rate
			acfm[b]	dscfm[c]		
1	49.15	72	14474	14272	0.97	105.45
2	49.03	72	14,442	14,065	1.08	99.68
3	50.41	72	14,847	14,882	0.90	99.48
Average	49.53	72	14588	14406	0.98	101.54

[a] Feet per second
[b] Actual cubic feet per minute
[c] Dry standard cubic feet per minute at 68 °F and 29.92" Hg

3.3.1 Cr-VI Results From Colorimetry and ICPCR Analyses

Table 3.2 list Cr-VI results obtained from two analytical techniques, namely: 1) colorimetry using diphenylcarbazide; and 2) ICPCR. The colorimetric technique , used in the field to determine Cr-VI, provided a rapid analysis of chromium concentrations. The results were not used in the emission calculations in this report and are provided in Appendix E for information only. RTIS's analytical results for total chromium (Cr-T) and hexavalent chromium (Cr-VI) were used to make emission calculations in this report.

Table 3.3 provides analytical results of Cr-VI mass emission testing at the Precision Engineering, Inc plant. The samples were analyzed using Ion-Chromatography with a Post Column Reactor (ICPCR). RTIL's analytical data report is provided in Appendix D. The average concentration at the outlet was 0.0103 mg/m^3. The average mass emission rate (lbs/hr) of the two inlets combined was 1.44×10^{-2} lb/hr and the outlet had an emission rate of 5.57×10^{-4} lb/hr.

3.2.2 Total Chromium Results From ICP Analysis

Presented in Table 3.4 are the total chromium (CR-T) emission results. RTIL's analytical data report is provided in Appendix D. The Cr-T emission concentration at the outlet averaged 0.0108 mg/m^3. The average Cr-T mass emission rate from Inlets No. 1 and No. 2 combined was 1.51×10^{-2} lb/hr and the outlet average emission rate was 5.83×10^{-4} lb/hr.

Table 3.2. COMPARISON OF EMISSION SAMPLE ANALYSIS RESULTS[a] FOR CHROMIUM-VI USING COLORIMETRY[b] AND ICPCR[c] TECHNIQUES

Inlet No. 1

Test Run No.	Sampling Time (min)	Total Cr-VI (μg)	
		Colorimetry[b]	ICPCR[c]
Run No.1	360	2,862	2,889
Run No. 2	240	743	1,774
Run No. 3	240	848	2,891
Average		**1,484**	**2,518**

Inlet No. 2

Run No. 1	360	1,517	1,589
Run No. 2	240	808	770
Run No. 3	240	779	813
Average		**1,035**	**1,057**

Outlet

Run No. 1	360	123	146
Run No. 2	240	37.8	60.6
Run No. 3	240	50.3	53.5
Average		**70.4**	**86.7**

---

[a] Results are expressed as total microgram of Chromium-VI
[b] Colormetric quantification on-site using diphenylcarbazide organic analytical reagent
[c] Ion-chromatography with a post column reactor.

Table 3.3. ANALYTICAL[a] RESULTS OF CHROMIUM-VI MASS EMISSION TESTING

Inlets[b]

Test Run No.	Total Cr-VI (μg)[C]	Emission Concentration (mg/m^3)[c]	Mass Emission Rate (lb/hr)[c]	Mass Emission Rate (kg/hr)[c]
1	4,478		1.30×10^{-2}	5.93×10^{-3}
2	2,544		1.175×10^{-2}	5.33×10^{-3}
3	3,704		1.838×10^{-2}	8.33×10^{-3}
Average	3,575		1.44×10^{-2}	6.53×10^{-3}

Outlet

Test Run No.	Total Cr-VI (μg)[C]	Emission Concentration (mg/m^3) [C]	Mass Emission Rate (lb/hr)[c]	Mass Emission Rate (kg/hr)[c]
1	146	0.0139	7.45×10^{-4}	3.38×10^{-4}
2	60.6	0.0093	4.91×10^{-4}	2.22×10^{-4}
3	53.5	0.0078	4.34×10^{-4}	1.97×10^{-4}
Average	86.7	0.0103	5.57×10^{-4}	2.52×10^{-4}

NOTE: The concentration in milligrams per cubic meter for the two inlets combined is omitted from the inlet data. Since the flow rates for the two inlets were different, a combined concentration number would not reflect the concentration of either inlet and is not needed in this report. Inlet #1 averaged 0.3364 Mg/M^3 of hexavalent chromium while Inlet #2 averaged 0.1353 Mg/M^3 of hexavalent chromium.

---

[a] Analysis method, Ion-Chromatography with Post Column Reactor.

[b] The control device has two inlets (Inlet No.1 and Inlet No.2).

[c] Sum of Cr-VI emissions from Inlet No.1 and Inlet No.2.

Table 3.4. ANALYTICAL[a] RESULTS OF TOTAL CHROMIUM MASS EMISSION TESTING

Inlets[b]

Test Run No.	Cr-T (μg)[c]	Emission Concentration (mg/m³)[c]	Mass Emission Rate (lb/hr)[c]	Mass Emission Rate (kg/hr)[c]
1	4,602		1.35×10^{-2}	6.14×10^{-3}
2	2,728		1.25×10^{-2}	5.656×10^{-3}
3	3,921		1.93×10^{-2}	8.741×10^{-3}
Average	**3,750**		1.51×10^{-2}	6.846×10^{-3}

Outlet

Test Run No.	Cr-T (μg)[c]	Emission Concentration (mg/m³)[c]	Mass Emission Rate (lb/hr)[c]	Mass Emission Rate (kg/hr)[c]
1	137.0	0.0131	6.99×10^{-4}	3.17×10^{-4}
2	68.3	0.0105	5.53×10^{-4}	2.51×10^{-4}
3	61.3	0.0089	4.97×10^{-4}	2.26×10^{-4}
Average	**88.9**	**0.0108**	5.83×10^{-4}	2.65×10^{-4}

NOTE: The concentration in milligrams per cubic meter for the two inlets combined is omitted from the inlet data. Since the flow rates for the two inlets were different, a combined concentration number would not reflect the concentration of either inlet and is not needed in this report. Inlet #1 averaged 0.3492 Mg/M³ of total chromium while Inlet #2 averaged 0.1478 Mg/M³ of total chromium.

---

[a] Analysis method, Inductively Coupled Plasma (ICP)

[b] The control device has two inlets (Inlet No. 1 and Inlet No. 2)

[c] Sum of total chromium emissions from Inlet No. 1 and Inlet No. 2

3.3.3 Concentrations In Plating Tank Solution, MPME Water and Train Blank Samples

Cr-VI and Cr-T concentrations in the plating tank solution, MPME water and train blank samples were determined by RTIL using ICPCR and ICP. The sample concentrations are presented in Table 3.5. The concentrations of chromium remained essentially constant throughout the testing period.

3.3.4 Computerized Spreadsheet Calculations

A computerized spreadsheet, provided by Mr. Frank Clay (U.S. EPA, Task Manager), was used to calculate the emission concentrations and mass emission rates in this report. Manual calculations were made by AST personnel to verify that the computer results were accurate. The computer printouts are provided in Appendix A. Appendix F presents the equations used to make these manual verifications.

3.3.5 Removal Efficiency of The Mesh Pad Mist Eliminator

Chromium removal efficiencies for the MPME system were determined by simultaneously sampling the two inlets and outlet of the MPME. The mass emission rates were used to calculate removal efficiencies. Removal efficiency is calculated using the equation below.

$$RE = \frac{C_i - C_o}{C_i} \times 100$$

Where:

RE = *% Removal Efficiency*

$C_i = \sum$ *of mass emission rates at Inlets* 1 *and* 2, *lb/hr*

C_o = *Mass emission rate at the outlet, lb/hr*

Table 3.5. ANALYSIS OF PLATING TANK SOLUTIONS, MPME WATER AND BLANK SAMPLES

SAMPLES*	Cr-VI[a] (μg/ml)	Cr-T[b] (μg/ml)
Tank 1 Run No. 1	$1.22 \times 10^{+5}$	$1.31 \times 10^{+5}$
Tank 1 Run No. 2	$8.59 \times 10^{+4}$	$1.30 \times 10^{+5}$
Tank 1 Run No. 3	$1.08 \times 10^{+5}$	$1.26 \times 10^{+5}$
Tank 2 Run No. 1	$1.15 \times 10^{+5}$	$1.27 \times 10^{+5}$
Tank 2 Run No. 2	$1.22 \times 10^{+5}$	$1.25 \times 10^{+5}$
Tank 2 Run No. 3	$1.14 \times 10^{+5}$	$1.24 \times 10^{+5}$
Tank 7 Run No. 1	$1.23 \times 10^{+5}$	$1.23 \times 10^{+5}$
Tank 7 Run No. 2	$1.23 \times 10^{+5}$	$1.26 \times 10^{+5}$
Tank 7 Run No. 3	$1.20 \times 10^{+5}$	$1.25 \times 10^{+5}$
Sampling Train		
Blank [c]	7.37×10^{-3}	3.20×10^{-2}
MJ Outlet Run No. 1	7.59×10^{-2} ($6.4 \times 10^{-2**}$)	2.69×10^{-1}
MJ Outlet Run No. 2	7.43×10^{-2} ($5.00 \times 10^{-2**}$)	2.86×10^{-1}
MJ Outlet Run No. 3	1.81×10^{-1} ($2.03 \times 10^{-1**}$)	6.00×10^{-3}

* Liquid grab samples from tanks 1, 2, 7 and the MPME were collected at the beginning, middle and end of each Method 13-B run. All samples are composites.

[a] ICPCR was used for analysis

[b] ICP was used for analysis

[c] The Method 13-B sampling train was cleaned between test runs. The blank sample, is a rinseate, was collected after cleaning the train components.

** In-field colorimetric analysis results for MPME water

Mass emission rates are presented in Tables 3.3 and 3.4. The data in Tables 3.3 and 3.4 indicate that more than 95% of the mass emissions are of Cr-VI and less than 5% of the emissions are of Cr-III.

3.3.6 Penetration of The Mesh Pad Mist Eliminator

Penetration can be used to evaluate the performance of a chromium emission control device such as a MPME. Penetration is defined as the percentage of chromium that escapes or is not collected by an emission control device. Percent penetration is calculated using the equation below.

$$\textit{Percent Penetration} = 100\% - RE$$

Where:

RE* = % *Removal Efficiency

Often, the percent penetration results reveal more about the process conditions than the percent efficiency results.

The calculated removal efficiencies are tabulated in Table 3.6. The average removal efficiency for Cr-VI was 95.94%. The average removal efficiency for Cr-T was 95.96%. The removal efficiencies for Cr-T and Cr-VI are essentially the same. As pointed out earlier, most of the mass emissions are of Cr-VI (~95%). The percent penetration for each test run was also calculated. Table 3.7 lists the results of the removal efficiency and the percent penetration calculations. Table 3.7 shows that about 4% of the chromium emissions penetrated the mesh pad mist eliminator.

Table 3.6. SUMMARY OF THE MESH PAD MIST ELIMINATOR CHROMIUM REMOVAL EFFICIENCIES

Analyte	Analytical Technique Used	Test Run No.	Mass Emission Rates at Inlets No. 1 and No. 2* (lb/hr)	Mass Emission Rate at Outlet (lb/hr)	Removal Efficiency (%)
Cr-VI	ICPCR	1	1.307×10^{-2}	7.449×10^{-4}	94.30
Cr-VI	ICPCR	2	1.175×10^{-2}	4.906×10^{-4}	95.82
Cr-VI	ICPCR	3	1.838×10^{-2}	4.340×10^{-4}	97.64
Average	NA	NA	1.440×10^{-2}	5.65×10^{-4}	95.92
Cr-T	ICP	1	1.353×10^{-2}	6.990×10^{-4}	94.83
Cr-T	ICP	2	1.247×10^{-2}	5.530×10^{-4}	95.57
Cr-T	ICP	3	1.927×10^{-2}	4.972×10^{-4}	97.42
Average	NA	NA	1.509×10^{-2}	5.831×10^{-4}	95.94

---

* - Inlets 1 and 2 mass emission rates were combined.

NA - Not Applicable

Table 3.7. REMOVAL EFFICIENCY AND PERCENT PENETRATION* OF CHROMIUM THROUGH THE MESH PAD MIST ELIMINATOR

Test Run No.	% Removal Efficiency		% Penetration	
	Cr-VI	Cr-T	Cr-VI	Cr-T
1	94.30	94.83	5.70	5.17
2	95.82	95.57	4.18	4.43
3	97.64	97.42	2.36	2.58
Average	95.92	95.94	4.08	4.06

* Percent Penetration = 100% - %Removal Efficiency

HEXAVALENT CHROMIUM EMISSION EVALUATION

PRECISION ENGINEERING, INC.
SEATTLE, WASHINGTON

Prepared for

U.S. ENVIRONMENTAL PROTECTION AGENCY
EMISSION MEASUREMENT BRANCH
RESEARCH TRIANGLE PARK, NORTH CAROLINA

EPA Contract No. 68-D-90155

DECEMBER 31, 1992

Prepared by

ADVANCED SYSTEMS TECHNOLOGY, INC.
3490 Piedmont Road, NE • Suite 1410
Atlanta, GA 30305-4810
(404)240-2930

TABLE OF CONTENTS

****

Sections		Pages
	TABLES and FIGURES	
	EXECUTIVE SUMMARY	i-iii
Section 1	INTRODUCTION	1-1
Section 2	PROCESS OPERATION	2-1
2.1	Process Description	2-1
2.2	Air Pollution Control Device	2-2
2.3	Process Conditions During Testing	2-4
Section 3	SUMMARY OF SAMPLE COLLECTION, EMISSION CALCULATIONS AND RESULTS	3-1
3.1	Sample Collection	3-1
3.2	Stack Gas Parameters	3-1
3.3	Emission Calculations and Discussion of Results	3-2
3.3.1	Cr-VI Results From Colorimetry and ICPCR Analyses	3-4
3.3.2	Total Chromium Results From ICP Analysis	3-4
3.3.3	Concentrations In Plating Tank Solution, MPME Water and Train Blank Samples	3-8
3.3.4	Computerized Spreadsheet Calculations	3-8
3.3.5	Removal Efficiency of The Mesh Pad Mist Eliminator	3-8
3.3.6	Penetration of The Mesh Pad Mist Eliminator	3-10
Section 4	SAMPLING AND ANALYSIS METHODS	4-1
4.1	Types of Samples Collected and Sample Recovery Descriptions	4-1
4.1.1	Liquid Grab Samples	4-1
4.1.2	Gaseous Stack Samples	4-1
4.1.3	Sampling Locations	4-2
4.2	Air Sampling Test Methods	4-7
4.2.1	Traverse Points	4-7
4.2.2	Stack Gas Velocity	4-7
4.2.3	Stack Gas Moisture	4-7
4.2.4	Modified Method 13-B Sampling Train	4-8
4.3	Sample Analysis Methods	4-8
4.3.1	Colorimetry	4-10
4.3.2	Inductively Coupled Plasma (ICP)	4-10
4.3.3	Ion-Chromatography With Post Column Reactor (ICPCR)	4-10
Section 5	QUALITY ASSURANCE PROGRAM, TEST PROGRAM PERSONNEL AND SUMMARY OF FIELD ACTIVITIES	5-1
5.1	Quality Assurance Program	5-1
5.2	Data Review Prior To Report Preparation	5-1
5.3	Contract Laboratory Quality Assurance Procedures	5-1
5.4	Test Program Personnel	5-2
5.5	Field Activities	5-3

TABLES and FIGURES

Tables		Page
S-1	Summary of Chromium Removal Efficiencies	iii
2.1	Average Operating Parameters Monitored During Each Mass Emissions Test Run	2-6
2.2	Total Ampere-Hours Supplied to Plating Tanks During Mass Emission Test Runs	2-7
3.1	Summary of Stack Gas Conditions	3-3
3.2	Comparison of Emission Sample Analysis Results For Chromium-VI Using Colorimetry and ICPCR Techniques	3-5
3.3	Analytical Results of Chromium-VI Mass Emission Testing	3-6
3.4	Analytical Results of Total Chromium Mass Emission Testing	3-7
3.5	Analysis of Plating Tank Solutions, MPME Water and Blank Samples	3-9
3.6	Summary of the Mesh Pad Mist Eliminator Chromium Removal Efficiencies	3-11
3.7	Removal Efficiency and Percent Penetration of Chromium Through the Mesh Pad Mist Eliminator	3-12

****

Figures		
2.1	Schematic of Ventilation and Control System for Chromium Plating Tanks at Precision Engineering, Inc.	2-3
4.1	Inlet No. 1 Traverse Point Locations	4-4
4.2	Inlet No. 2 Traverse Point Locations	4-5
4.3	Outlet Traverse Point Locations	4-6
4.4	Schematic of the Modified U.S. EPA Method 13-B Sampling Train	4-9

Appendices

		Page
A	Computer Printout of Field Data	A-1 - A-37
B	Field Data Sheets	B-1 - B-40
C	Sampling Sheets and Summary of Results (AST and U.S. EPA)	C-1 - C-17
D	Laboratory Analysis Reports and Chain of Custody Forms	D-1 - D-8
E	On-Site Colorimetric Analysis For Hexavalent Chromium	E-1 - E-12
F	Sample Calculations	F-1 - F-8
G	Draft Method - Determination of Hexavalent Chromium Emissions from Decorative and Hard Chrome Electroplating	G-1 - G-8
H	Ampere-Hour Calculations	H-1 - H-26
I	Laboratory Analysis Procedure Method of Determination of Cr-VI in Alkaline Solution	I-1 - I-3
J	Equipment Calibration Data	J-1 - J-9
K	Determination of Total Chromium and Hexavalent Chromium Emissions from Stationary Sources (CARB425)	K-1 - K-22

EXECUTIVE SUMMARY

The objective of this project was to evaluate the chromium removal efficiency of the mesh pad mist eliminator (MPME) system at Precision Engineering, Inc., in Seattle, Washington. This objective was achieved by concurrently measuring hexavalent chromium (Cr-VI) and total chromium (Cr-T) mass emissions at the inlets and outlet of a mesh pad mist eliminator (MPME) using a modification of U.S. EPA Method 13-B.

During the field work, Precision Engineering, Inc. operated three of its six plating tanks. Plating Tanks 1, 2 and 7 were being used to chrome plate pieces of industrial equipment. The hood exhaust ducting from tanks 1 and 2 were combined in a common duct and formed one leg of the inlet (Inlet No. 1) to the MPME. Tank 7 was ducted separately, forming the second leg (Inlet No. 2) of the inlet to the MPME. The MPME used for controlling chromium mass emissions was located on the roof of the plant shop and consisted of a set of chevron-blades followed by a series of three graded mesh pads.

Field testing was conducted during the week of December 16, 1991. Sampling was performed at the two inlets (Inlet No. 1 from Tanks 1 and 2 and Inlet No. 2 from Tank 7), and at the outlet of the mesh pad mist eliminator (MPME) under its normal operating conditions for the plating processes. Three separate isokinetic test runs were conducted during field testing. Sampling times of 240 or 360 minutes assured collection of adequate quantities of chromium for subsequent chemical analysis. In addition, grab samples of MPME water and plating bath solutions were also obtained during each of the Method 13-B test runs for Cr-VI and Cr-T analyses.

Upon completion of each test run, the mass emission samples were recovered in the field, labeled, and stored in a cooler. Each sample was analyzed on-site for Cr-VI using the diphenylcarbazide colorimetric method (see Appendix E). Upon completion of field testing, all samples were packed in a cooler and transported to Research Triangle Institute Laboratory (RTIL), Research Triangle Park, North Carolina. RTIL performed analysis for Cr-VI using Ion-Chromatography with a Post Column Reactor (ICPCR) and Cr-T using Inductively Coupled Plasma (ICP). Plating tank solution and MPME water samples were also analyzed for Cr-VI and Cr-T at RTIL.

This project work has provided an opportunity to assess the accuracy of the analytical results which form the basis to measure control device efficiencies. Field samples were analyzed for Cr-VI using the diphenylcarbazide colorimetric method on-site and later the same samples were analyzed off-site with ICPCR. The analytical data obtained were compared and indicate, colorimetric and ICPCR methods gave overall similar results (see Section 3).

Table S-1 summarizes the chromium removal efficiencies for the mesh pad mist eliminator (MPME) system. Based upon the measurements performed during this project, the MPME has an average chromium removal efficiency of 96.0%. The average total chromium (Cr-T) concentration at Inlets No. 1 and No. 2 combined was 0.4970 mg/m^3. The total chromium emission concentration at the outlet averaged 0.0108 mg/m^3. The average Cr-T mass emission rate from Inlets No. 1 and No. 2 combined was 1.50 x 10^{-2} lb/hr and for outlet average was 5.75 x 10^{-4} lb/hr. The average hexavalent chromium (Cr-VI) concentration at Inlets No. 1 and No. 2 combined was 0.4717 mg/m^3 and for the outlet 0.0103 mg/m^3. These averages translate into Cr-VI mass emission rates of 1.430 x 10^{-2} lb/hr and 5.48 x 10^{-4} lb/hr for the MPME inlets and the outlet respectively.

TABLE S-1

SUMMARY OF CHROMIUM* REMOVAL EFFICIENCIES

	Mass Emission Rate (lb/hr)	Removal Efficiency (%)
Run No. 1		
Inlet**	1.32×10^{-2}	94.9
Outlet	6.75×10^{-4}	
Run No. 2		
Inlet**	1.25×10^{-2}	95.6
Outlet	5.53×10^{-4}	
Run No. 3		
Inlet**	1.93×10^{-2}	97.4
Outlet	4.97×10^{-4}	
AVERAGE REMOVAL EFFICIENCY		96.0

* Expressed as Total Chromium (Cr-T)
** Represents Sum of Inlet No. 1 and Inlet No. 2

Section 1

INTRODUCTION

The objective of this project was to evaluate the chromium removal performance of the mesh pad mist eliminator (MPME) system at Precision Engineering, Inc., in Seattle, Washington. Chromium emission concentrations were measured at the two inlets (Inlet No. 1 and Inlet No. 2) and the outlet of the MPME to determine the efficiency of the system for chromium removal.

Testing was conducted during the week of December 16, 1991. Emission samples were collected using a modification of U.S. EPA Method 13-B. This method is briefly described in Section 4 of this report. The emission samples were collected simultaneously from Inlets No. 1 and No. 2 and from the Outlet of the MPME under normal operating conditions. The sampling locations are identified in Figure 2-1. MPME water samples and plating tank solution samples were also collected under the normal operating conditions of the MPME and plating processes.

Samples were analyzed on-site, using the diphenylcarbazide method, for hexavalent chromium. The plating tank solution samples were analyzed off-site. After the field activities were completed, the samples were shipped to Research Triangle Institute Laboratory (RTIL) for chromium analyses . RTIL is located in Research Triangle Park, North Carolina. The Inlet and Outlet samples were analyzed at RTIL for total chromium using Inductively Coupled Plasma emission spectrometry (ICP) and for hexavalent chromium using Ion-Chromatography with a Post Column Reactor (ICPCR). MPME water samples and plating tank solution samples were analyzed using ICPCR and ICP. The analytical techniques employed in this test program are described in Section 4 of this report.

The primary organizations involved in this test program were Advanced Systems Technology, Inc. (AST), Precision Engineering, Inc. (PEI), Midwest Research Institute (MRI) and the U.S. EPA, Emission Measurement Branch (EMB).

Section 2

PROCESS OPERATION

2.1 Process Description

Precision Engineering is a medium-size job shop that performs hard chromium plating of industrial rolls, hydraulic cylinders and miscellaneous small parts. The plating shop has six hard chromium plating tanks. The plating shop normally operates 24 hours per day, five days per week.

During this source test, tank Nos. 1, 2 and 7 were tested. Plating tank Nos. 1 and 2 are 2.0-meters (m) (6.5-feet) [ft]) long, 1.3-m (4.2-ft) wide, and 3.7m (12.0 ft) deep and hold approximately 9,280 liters (L) (2,450 gallons [gal]) of plating solution. Plating tank No. 7 is 1.2-m (4.0-ft) long, 1.8-m (5.9-ft) wide and 5.5-m (18.0-ft) deep and holds approximately 11,830 L (3,120 gal) of plating solution. The plating solution contains chromic acid at a concentration of about 250 grams per liter (g/L) (33 ounces per gallon [oz/gal]) of water. Sulfuric acid is used as a catalyst at a bath concentration of 2.5 g/L (0.33 oz/gal). The temperature of the plating solution is maintained at approximately 60°C (140°F).

The three plating tanks are divided into two cells and each cell is equipped with a rectifier to to control the current flow. Current ratings per cell are 5,000 amperes, 3,000 amperes, and 10,000 amperes for tanks Nos. 1, 2 and 7, respectively. Each rectifier is also equipped with ampere-hour meters that measure the amount of current supplied to the plating tanks over time.

All of the plating tanks are serviced by overhead hoists that are used to transfer parts in and out of the tanks. Heating and cooling systems are located in each tank to maintain uniform solution

temperature. In addition, each tank is equipped with an air agitation system to aid in maintaining uniform bath concentration and temperature.

2.2 Air Pollution Control Device

A schematic of the ventilation and control system on the plating tanks is shown in Figure 2-1. The mesh pad mist eliminator system was manufactured by KCH Services, Inc., in Forest City, North Carolina. The system was installed during 1991 by plant personnel. Each tank is equipped with a double-sided ventilation hood. Moisture extractors are located in the hood uptakes to remove large chromic acid mist droplets prior to the mist eliminator. The purpose of the moisture extractors is to reduce the plugging tendency of the mist eliminator by reducing the inlet loading to the device. The takeoffs from tank Nos. 1 and 2 are ducted together and form one inlet leg to the mist eliminator, while tank No. 7 is ducted separately and forms a second leg to the mist eliminator. The ventilation system is rated at 470 cubic meters per minute (16,500 cubic feet per minute). The pressure drop across the mist eliminator is 1.7 kiloPascals (7 inches in water column).

The mist eliminator is installed on the roof of the plating shop and consists of a set of chevron-blades followed by a series of three mesh pads. The mist eliminator is designed to remove chromic acid mist in stages depending upon the particle size. The larger droplets (particles greater than 10 microns), which comprise the majority of the emissions, are removed by the moisture extractor located above tanks 1, 2 and 7 but before the mist eliminator and also by the chevron-blade stage of the MPME. The first mesh pad is designed to remove smaller particles (particles between 5 and 10 microns). The first mesh pad is composed of multiple layers of mesh pad material, and each layer is woven from fibers with diameters of 0.09 centimeter (cm) (37 thousandths of an inch [mils]. The second mesh pad (the composite mesh pad) is designed

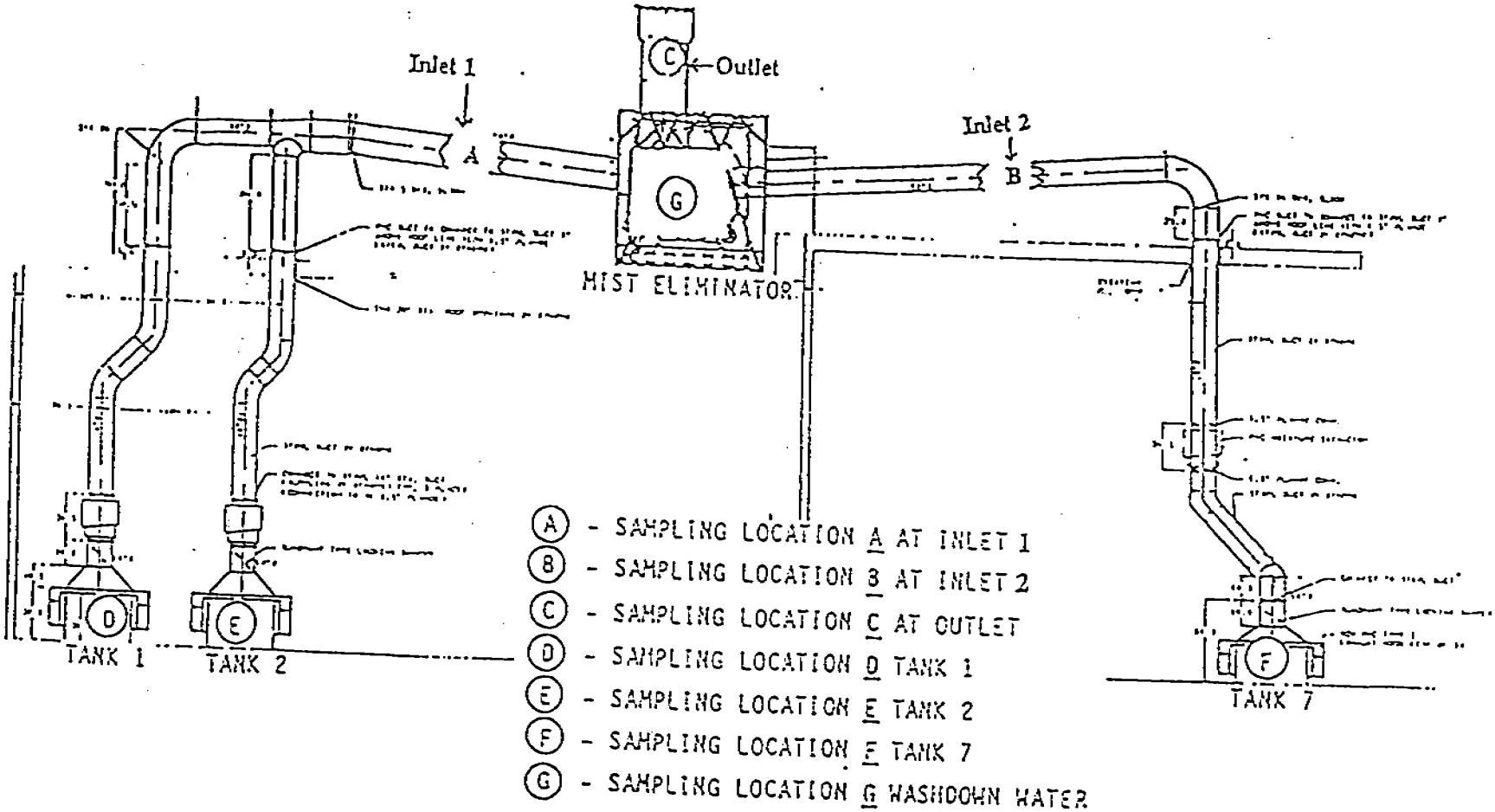

Figure 2.1. Schematic of Ventilation and Control System for Chromium Plating Tanks at Precision Engineering, Inc.

such that the material layers in the center of the pad are composed of extremely small -diameter fibers (0.02 cm [8 mils]). The smaller the fiber diameter, the more dense the material layer. The material layers on either side of the center are composed of progressively larger diameter fibers (0.04 to 0.09 cm [16 to 37 mils]). As the gas stream flows through the composite pad, the small particles that escape the first mesh pad (particles below 5 microns) impinge on the composite pad and coalesce into larger droplets. These enlarged particles are then removed in the backside of the composite pad or in the backup mesh pad located downstream of the composite pad. The third pad or backup mesh pad is composed of layers of material with a fiber diameter of 0.09 cm (37 mils). The thickness of each pad is 15.7 cm (6.2 inches [in.]), 9.7 cm (3.8 in.), and 18.3 cm (7.2 in.) for the first, second, and third pads, respectively.

Prior to each mesh pad is a series of spray nozzles that are used to wash down the pads and remove any chromium that has built up on the pads. The pressure drop across each mesh pad is monitored to determine the amount of chromium buildup on the pad. An increase in pressure drop above the normal operating range for a given pad indicates that the pad needs to be washed down. Spray nozzles are also located in the chevron-blade section to allow periodic washing of the blades.

2.3 Process Conditions During Testing

Three mass emission test runs were conducted at the two inlet locations and the outlet of the mist eliminator to characterize the performance of a mesh-pad mist eliminator system that incorporated the use of a composite mesh pad. Each test run was 4 or 6 hours in duration. All of the test runs were interrupted briefly to change test ports. No other interruptions occurred during sampling.

Sampling of Inlet No. 1 and Inlet No. 2 was performed at distances of 18 feet from the nearest downstream disturbance and 4 feet from the nearest upstream disturbance (mist eliminator). Sampling of the Outlet was performed at a distance of 60 inches from the nearest downstream disturbance (outlet base) and 35 inches from the nearest upstream disturbance (top of exhaust stack).

Process operating parameters monitored and recorded during each test run included the voltage, current, ampere-hours, and the plating solution temperature for each plating tank. A description (dimensions and surface areas) of each part plated also was recorded for each test run. Process data sheets documenting the process and control device operating parameters during mass emission testing are presented in Appendix H. Data on the average operating parameters recorded during the mass emission test runs are presented in Table 2-1. The total amount of current supplied to the tanks during each test run is calculated in terms of ampere-hours and is included in Appendix H.

A tabular summary of the total current values is presented in Table 2-2. As noted previously, the ampere-hours supplied during testing were monitored and recorded from the ampere-hour meters on each rectifier. However, the sum of the ampere-hours for each rectifier will not match the ampere-hours calculated in Appendix H because of the difference between the actual sampling time and the time required for testing. These time periods are not equal because of the time required to change test ports. Therefore, the ampere-hours measured by the ampere-hour meters will be slightly higher than the actual ampere-hours calculated in Appendix H.

Table 2.1. AVERAGE OPERATING PARAMETERS MONITORED DURING EACH MASS EMISSIONS TEST RUN

Test Run No.	Tank No.	Operating Voltage, Volts	Operating Current, Amperes	Operating Temperature °F
1	1A	7.0	4,300	140
	1B	7.0	3,700	140
	2A	7.6	2,300	140
	2B	7.6	1,400	140
	7A	--	--	140
	7B	8.0	7,000	140
2	1A	6.4	3,600	140
	1B	6.3	3,400	140
	2A	7.2	1,700	140
	2B	7.4	1,850	140
	7A	6.6	1,300	140
	7B	6.4	2,000	140
3	1A	6.4	2,970	140
	1B	6.4	2,800	140
	2A	7.7	2,000	140
	2B	7.8	1,700	140
	7A	6.0	1,000	140
	7B	7.3	7,200	140

Table 2.2. TOTAL AMPERE-HOURS SUPPLIED TO PLATING TANKS DURING MASS EMISSION TEST RUNS

TOTAL CURRENT, AMPERE-HOURS			
Test Run No.	**Inlet No. 1[a]**	**Inlet No. 2[b]**	**Outlet**
1	67,020	42,025	109,045
2	42,000	28,690	70,690
3	37,975	32,750	70,725

a Total current for Tanks 1 and 2 combined
b Total current for Tank 7

Composite samples were taken from each plating tank to determine the chromic acid concentration of the plating solutions during each mass emission test run. The data obtained are reported in Section 3 of this report.

MPME operating parameters monitored during each test run consisted of the pressure drop across the unit, and the overall system pressure drop. The Magnahelic gauges are located downstairs in the plating shop; therefore, the pressure drop readings on the Magnahelic gauges are not indicative of the actual pressure drop but are approximate values because of the pressure losses in the tubing that connect the Magnahelic gauges to the mist eliminator. However, the important factor in monitoring the pressure drop is any decrease or increase from the normal operating range. An increase in pressure drop over its normal range indicates that the pad is beginning to plug, and a decrease in pressure drop indicates that the gas stream is bypassing the pad. The pressure drop readings recorded across each pad and the overall unit were consistent for all test runs.

Section 3

SUMMARY OF SAMPLE COLLECTION, EMISSION CALCULATIONS AND RESULTS

3.1 Sample Collection

Emission samples were collected using a modification of U.S. EPA Method 13-B. The samples were collected simultaneously from Inlets No. 1 and No. 2 and from the Outlet of the MPME under normal operating conditions. Three tests were conducted at each sampling location. Sampling times of 4 or 6 hours per test run were used to ensure that adequate quantities of chromium were collected for subsequent chemical analysis.

Grab samples from the plating tank solutions (Tanks 1, 2 and 7) and the MPME water were also collected during each sampling run. These samples were obtained at the beginning, middle and at the end of each Method 13-B test run.

3.2 Stack Gas Parameters

Stack gas parameters, at each sampling location, are shown in Table 3-1. At Inlet No. 1, the stack gas velocity averaged 50.66 feet per second (fps), the average stack temperature was 78°F and the average moisture content was 1.11%. The volumetric flow rates at Inlet No. 1 were 9,548 actual cubic feet per minute (acfm) and 9,180 dry standard cubic feet per minute (dscfm). At Inlet No. 2, the stack gas velocity averaged 50.34 fps, the average stack temperature was 77°F and the average moisture content was 0.75%. The volumetric flow rates at Inlet No. 2 were 5,337 acfm and 5,159 dscfm.

At the Outlet, the stack gas velocities averaged 50.11 fps, the average stack temperature was 85°F and the average moisture content was 0.98%. The average volumetric flow rates at the Outlet were 14,758 acfm and 14,241 dscfm.

The stack gas at all sampling locations was essentially ambient air and thus was assigned a dry molecular weight of 28.95 lb/lb-mole. Variation in isokinetic sampling rates were within allowable limits for all sampling runs of Method 13-B except Run 2 of Inlet 2 which had an isokinetic rate of 88.81%.

The evaluation of particle size, from previous test runs, indicate that more than 85% of the particles emitted from a controlled electroplating process are less than 2.5 microns in diameter. Particles less than 2.5 microns behave like a gas rather than a particulate. In gaseous sampling the isokinetic sampling rate is not considered to be significant. Therefore, no adjustments were made to the data and the results are acceptable.

3.3 Emission Calculations and Discussion of Results

This subsection of the report provides the following information: 1) Cr-VI results from colorimetry and ICPCR analyses; 2) Cr-T results from ICP analysis; 3) Cr-VI and Cr-T concentrations in the plating tank solutions, MPME water and sampling train blank samples; 4) computerized spreadsheet calculations of emission concentrations and mass emission rates; 5) MPME removal efficiencies; and 6) MPME penetration.

Table 3.1 SUMMARY OF STACK GAS CONDITIONS

Inlet No.1

Run No.	Velocity fps[a]	Stack Temp. °F	Flow Rate		Moisture %	% Isokinetic Rate
			acfm[b]	dscfm[c]		
1	50.77	96	9,570	8,901	0.98	101.52
2	48.53	69	9,148	8,830	1.14	98.99
3	52.66	70	9,927	9,810	1.21	93.32
Average	**50.66**	**78**	**9,548**	**9,180**	**1.11**	**97.94**

Inlet No. 2

Run No.	Velocity fps[a]	Stack Temp. °F	Flow Rate		Moisture %	% Isokinetic Rate
			acfm[b]	dscfm[c]		
1	52.14	93	5,528	5,183	0.67	103.02
2	52.02	70	5,516	5,350	0.65	88.81
3	46.85	68	4,968	4,943	0.94	98.37
Average	**50.34**	**77**	**5,337**	**5,159**	**0.75**	**96.73**

Outlet

Run No.	Velocity fps[a]	Stack Temp. °F	Flow Rate		Moisture %	% Isokinetic Rate
			acfm[b]	dscfm[c]		
1	50.88	111	14,986	13,776	0.97	109.24
2	49.03	72	14,442	14,065	1.08	99.68
3	50.41	72	14,847	14,882	0.90	99.48
Average	**50.11**	**85**	**14,758**	**14,241**	**0.98**	**102.80**

[a] Feet per second
[b] Actual cubic feet per minute
[c] Dry standard cubic feet per minute at 68 °F and 29.92" Hg

3.3.1 Cr-VI Results From Colorimetry and ICPCR Analyses

Table 3.2 lists Cr-VI results obtained from two analytical techniques namely: 1) colorimetry using diphenylcarbazide; and 2) ICPCR. The colorimetric technique, used in the field to determine Cr-VI, provided a rapid analysis of chromium concentrations. The results were not used in the emission calculations in this report and are provided in Appendix E for information only. RTIL's analytical results for total chromium (Cr-T) and hexavalent chromium (Cr-VI) were used to make emission calculations in this report.

Table 3.3 provides analytical results of Cr-VI mass emission testing at the Precision Engineering, Inc. plant. The samples were analyzed using Ion-Chromatography with a Post Column Reactor (ICPCR). RTIL's analytical data report is provided in Appendix D. The average concentration of Inlets No. 1 and No. 2 combined was 0.4717 mg/m^3 of Cr-VI and the outlet average concentration was 0.0103 mg/m^3 . These averages translate into Cr-VI mass emission rates of 1.43×10^{-2} lb/hr and 5.48×10^{-4} lb/hr for the inlets and the outlet respectively.

3.3.2 Total Chromium Results From ICP Analysis

Presented in Table 3.4 are the total chromium (Cr-T) emission results. RTIL's analytical data report is provided in Appendix D. Table 3.4 shows an average Cr-T emission concentration of 0.497 mg/m^3 at Inlets No. 1 and No. 2 combined. The Cr-T emission concentration at the outlet averaged 0.0108 mg/m^3. The average Cr-T mass emission rate from Inlets No. 1 and No. 2 combined was 1.50×10^{-2} lb/hr and the outlet average emission rate was 5.75×10^{-4} lb/hr.

Table 3.2. COMPARISON OF EMISSION SAMPLE ANALYSIS RESULTS[a] FOR CHROMIUM-VI USING COLORIMETRY[b] AND ICPCR[c] TECHNIQUES

Inlet No. 1

Test Run No.	Sampling Time (min)	Total Cr-VI (μg)	
		Colorimetry[b]	ICPCR[c]
Run No.1	360	2,862	2,889
Run No. 2	240	743	1,774
Run No. 3	240	848	2,891
Average		**1,484**	**2,518**

Inlet No. 2

Run No. 1	360	1,517	1,589
Run No. 2	240	808	770
Run No. 3	240	779	813
Average		**1,035**	**1,057**

Outlet

Run No. 1	360	123	146
Run No. 2	240	37.8	60.6
Run No. 3	240	50.3	53.5
Average		**70.4**	**86.7**

---

[a] Results are expressed as total microgram of Chromium-VI

[b] Colormetric quantification on-site using diphenylcarbazide organic analytical reagent

[c] Ion-chromatography with a post column reactor.

Table 3.3. ANALYTICAL[a] RESULTS OF CHROMIUM-VI MASS EMISSION TESTING

Inlets[b]

Test Run No.	Total Cr-VI (μg)[c]	Emission Concentration (mg/m^3)[c]	Mass Emission Rate (lb/hr)[c]	Mass Emission Rate (kg/hr)[c]
1	4,478	0.4465	1.276×10^{-2}	5.79×10^{-3}
2	2,544	0.4045	1.175×10^{-2}	5.33×10^{-3}
3	3,704	0.5640	1.838×10^{-2}	8.33×10^{-3}
Average	**3,575**	**0.4717**	**1.430×10^{-2}**	**6.48×10^{-3}**

Outlet

Test Run No.	Total Cr-VI (μg)[c]	Emission Concentration (mg/m^3)[c]	Mass Emission Rate (lb/hr)[c]	Mass Emission Rate (kg/hr)[c]
1	146	0.0139	7.19×10^{-4}	3.26×10^{-4}
2	60.6	0.0093	4.91×10^{-4}	2.22×10^{-4}
3	53.5	0.0078	4.34×10^{-4}	1.97×10^{-4}
Average	**86.7**	**0.0103**	**5.48×10^{-4}**	**2.48×10^{-4}**

---

[a] Analysis method, Ion-Chromatography with Post Column Reactor.
[b] The control device has two inlets (Inlet No.1 and Inlet No.2).
[c] Sum of Cr-VI emissions from Inlet No.1 and Inlet No.2.

Table 3.4. ANALYTICAL[a] RESULTS OF TOTAL CHROMIUM MASS EMISSION TESTING

Inlets[b]

Test Run No.	Cr-T (μg)[c]	Emission Concentration (mg/m^3)[c]	Mass Emission Rate (lb/hr)[c]	Mass Emission Rate (kg/hr)[c]
1	4,602	0.4592	1.32×10^{-2}	5.991×10^{-3}
2	2,728	0.4341	1.25×10^{-2}	5.656×10^{-3}
3	3,921	0.5976	1.93×10^{-2}	8.741×10^{-3}
Average	**3,750**	**0.4970**	**1.50×10^{-2}**	**6.796×10^{-3}**

Outlet

Test Run No.	Cr-T (μg)[c]	Emission Concentration (mg/m^3)[c]	Mass Emission Rate (lb/hr)[c]	Mass Emission Rate (kg/hr)[c]
1	137.0	0.0131	6.75×10^{-4}	3.06×10^{-4}
2	68.3	0.0105	5.53×10^{-4}	2.51×10^{-4}
3	61.3	0.0089	4.97×10^{-4}	2.26×10^{-4}
Average	**88.9**	**0.0108**	**5.75×10^{-4}**	**2.61×10^{-4}**

---

[a] Analysis method, Inductively Coupled Plasma (ICP)
[b] The control device has two inlets (Inlet No. 1 and Inlet No. 2)
[c] Sum of total chromium emissions from Inlet No. 1 and Inlet No. 2

3.3.3 Concentrations In Plating Tank Solution, MPME Water and Train Blank Samples

Cr-VI and Cr-T concentrations in the plating tank solution, MPME water and train blank samples were determined by RTIL using ICPCR and ICP. The sample concentrations are presented in Table 3.5. The concentrations of chromium remained essentially constant throughout the testing period.

3.3.4 Computerized Spreadsheet Calculations

A computerized spreadsheet, provided by Mr. Frank Clay (U.S. EPA, Task Manager), was used to calculate the emission concentrations and mass emission rates in this report. Manual calculations were made by AST personnel to verify that the computer results were accurate. The computer printouts are provided in Appendix A. Appendix F presents the equations used to make these manual verifications.

3.3.5 Removal Efficiency of The Mesh Pad Mist Eliminator

Chromium removal efficiencies for the MPME system were determined by simultaneously sampling the two inlets and outlet of the MPME. The mass emission rates were used to calculate removal efficiencies. Removal efficiency is calculated using the equation below.

$$RE = \frac{C_i - C_o}{C_i} x\ 100$$

Where:

RE = % Removal Efficiency

$C_i = \sum$ *of mass emission rates at Inlets* 1 *and* 2, *lb/hr*

C_o = *Mass emission rate at the outlet, lb/hr*

Table 3.5. ANALYSIS OF PLATING TANK SOLUTIONS, MPME WATER AND BLANK SAMPLES

SAMPLES*	Cr-VI[a] (μg/ml)	Cr-T[b] (μg/ml)
Tank 1 Run No. 1	$1.22 \times 10^{+5}$	$1.31 \times 10^{+5}$
Tank 1 Run No. 2	$8.59 \times 10^{+4}$	$1.30 \times 10^{+5}$
Tank 1 Run No. 3	$1.08 \times 10^{+5}$	$1.26 \times 10^{+5}$
Tank 2 Run No. 1	$1.15 \times 10^{+5}$	$1.27 \times 10^{+5}$
Tank 2 Run No. 2	$1.22 \times 10^{+5}$	$1.25 \times 10^{+5}$
Tank 2 Run No. 3	$1.14 \times 10^{+5}$	$1.24 \times 10^{+5}$
Tank 7 Run No. 1	$1.23 \times 10^{+5}$	$1.23 \times 10^{+5}$
Tank 7 Run No. 2	$1.23 \times 10^{+5}$	$1.26 \times 10^{+5}$
Tank 7 Run No. 3	$1.20 \times 10^{+5}$	$1.25 \times 10^{+5}$
Sampling Train		
Blank [c]	7.37×10^{-3}	3.20×10^{-2}
MJ Outlet Run No. 1	7.59×10^{-2} ($6.4 \times 10^{-2**}$)	2.69×10^{-1}
MJ Outlet Run No. 2	7.43×10^{-2} ($5.00 \times 10^{-2**}$)	2.86×10^{-1}
MJ Outlet Run No. 3	1.81×10^{-1} ($2.03 \times 10^{-1**}$)	6.00×10^{-3}

---

* Liquid grab samples from tanks 1, 2, 7 and the MPME were collected at the beginning, middle and end of each Method 13-B run. All samples are composites.

[a] ICPCR was used for analysis

[b] ICP was used for analysis

[c] The Method 13-B sampling train was cleaned between test runs. The blank sample, is a rinseate, was collected after cleaning the train components.

** In-field colorimetric analysis results for MPME water

Mass emission rates are presented in Tables 3.3 and 3.4. The data in Tables 3.3 and 3.4 indicate that more than 95% of the mass emissions are of Cr-VI and less than 5% of the emissions are of Cr-III.

3.3.6 Penetration of The Mesh Pad Mist Eliminator

Penetration can be used to evaluate the performance of a chromium emission control device such as a MPME. Penetration is defined as the percentage of chromium that escapes or is not collected by an emission control device. Percent penetration is calculated using the equation below.

$$\textit{Percent Penetration} = 100\% - RE$$

Where:

RE = *% Removal Efficiency*

Often, the percent penetration results reveal more about the process conditions than the percent efficiency results.

The calculated removal efficiencies are tabulated in Table 3.6. The average removal efficiency for Cr-VI was 95.94%. The average removal efficiency for Cr-T was 95.96%. The removal efficiencies for Cr-T and Cr-VI are essentially the same. As pointed out earlier, most of the mass emissions are of Cr-VI (~95%). The percent penetration for each test run was also calculated. Table 3.7 lists the results of the removal efficiency and the percent penetration calculations. Table 3.7 shows that about 4% of the chromium emissions penetrated the mesh pad mist eliminator.

Table 3.6. SUMMARY OF THE MESH PAD MIST ELIMINATOR CHROMIUM REMOVAL EFFICIENCIES

Analyte	Analytical Technique Used	Test Run No.	Mass Emission Rates at Inlets No. 1 and No. 2* (lb/hr)	Mass Emission Rate at Outlet (lb/hr)	Removal Efficiency (%)
Cr-VI	ICPCR	1	1.276×10^{-2}	7.190×10^{-4}	94.37
Cr-VI	ICPCR	2	1.175×10^{-2}	4.906×10^{-4}	95.82
Cr-VI	ICPCR	3	1.838×10^{-2}	4.340×10^{-4}	97.64
Average	**NA**	**NA**	**1.430×10^{-2}**	**5.479×10^{-4}**	**95.94**
Cr-T	ICP	1	1.320×10^{-2}	6.747×10^{-4}	94.89
Cr-T	ICP	2	1.247×10^{-2}	$5.530 \text{ X } 10^{-4}$	95.57
Cr-T	ICP	3	1.927×10^{-2}	4.972×10^{-4}	97.42
Average	**NA**	**NA**	**1.498×10^{-2}**	**5.750×10^{-4}**	**95.96**

---

* - Inlets 1 and 2 mass emission rates were combined.
NA - Not Applicable

Table 3.7. REMOVAL EFFICIENCY AND PERCENT PENETRATION* OF CHROMIUM THROUGH THE MESH PAD MIST ELIMINATOR

Test Run No.	% Removal Efficiency		% Penetration	
	Cr-VI	Cr-T	Cr-VI	Cr-T
1	94.37	94.89	5.63	5.11
2	95.82	95.57	4.18	4.43
3	97.64	97.42	2.36	2.58
Average	**95.94**	**95.96**	**4.06**	**4.04**

---

* Percent Penetration = 100% - %Removal Efficiency

Section 4

SAMPLING AND ANALYSIS METHODS

4.1 Types of Samples Collected and Sample Recovery Descriptions

Two types of samples were collected during field testing at the Precision Engineering, Inc. plant: 1) liquid grab samples; and 2) gaseous stack samples. A description for each sample type collected is provided below.

4.1.1 Liquid Grab Samples

The plating tank solution and the mesh pad mist eliminator water samples were collected during each sampling run, in pre-cleaned Mason jars. For example, one plating tank solution sample consisted of three sample fractions collected in the same Mason jar. Each sample fraction was collected at different periods (i.e., beginning, middle and end) of a test run. Nine (9) composite plating tank solution samples were collected from plating tanks (1, 2 and 7) and 3 composite samples were collected from the mesh pad mist eliminator during this project. Each sample was labeled with date, run number and sample location.

4.1.2 Gaseous Stack Samples

Gaseous stack samples were collected from two inlet locations (Inlet No. 1 and Inlet No. 2) and one Outlet location, using Method 13-B. Method 13-B stack samples were recovered immediately after each test run. The contents of impingers 1 and 2 were measured for volume increase and then transferred to a pre-weighed and pre-cleaned plastic bottle. The nozzle, probe and glass tubing connecting the impingers were washed with 0.1N NaOH. These washings were added to the same plastic bottle. Silica gel from the fourth impinger was weighed to determine

weight gain from moisture absorption. The silica gel was then placed in a container, labeled and stored in the cooler.

A sampling train blank sample was collected after each Method 13-B test run. This was performed by thoroughly rinsing the inside of the sampling train components with a 0.1N NaOH solution and then placing the rinseate into a container labeled "Sampling Train Blank." The sampling train blank was stored in the cooler. Field blank samples were also prepared, labeled and stored in the cooler.

4.1.3 Sampling Locations

Inlet No. 1

Inlet No. 1 was located on a straight run of 24-inch diameter duct work just before the mesh pad mist eliminator. Sampling ports were cut at a location approximately 18 feet downstream and 4 feet upstream from the nearest disturbance. According to U.S. EPA Method 1 criteria, this location required 12 traverse points, six along each of the two perpendicular diameters. Figure 4.1 shows Inlet No. 1 traverse point locations.

Inlet No. 2

Inlet No. 2 was located on a straight run of 18-inch diameter duct work just before the control device. Sampling ports were cut at a location approximately 18 feet downstream and 4 feet upstream of the nearest disturbance. Twelve traverse points were also required at this location. Figure 4.2 shows Inlet No. 2 traverse point locations.

Outlet

The Outlet of the mesh pad mist eliminator was a 30-inch diameter stack. The total height of the stack was about 95 inches. This total height included a 24-inch stack extension attached to the stack during the test. A butterfly-type cap was installed to prevent extraneous materials from entering into the stack. Sampling ports were cut at a location approximately 60 inches downstream and 35 inches upstream of the nearest disturbance. Figure 4.3 shows the Outlet traverse point locations. Twenty-four traverse points were required at this location; 12 along each of the two perpendicular diameters. Figure 4.3 shows the Outlet traverse point locations. Figures 4.1 through 4.3 show traverse point locations along one perpendicular diameter. The total number of traverse points, in these figures, are obtained by multiplying the traverse point locations shown by two.

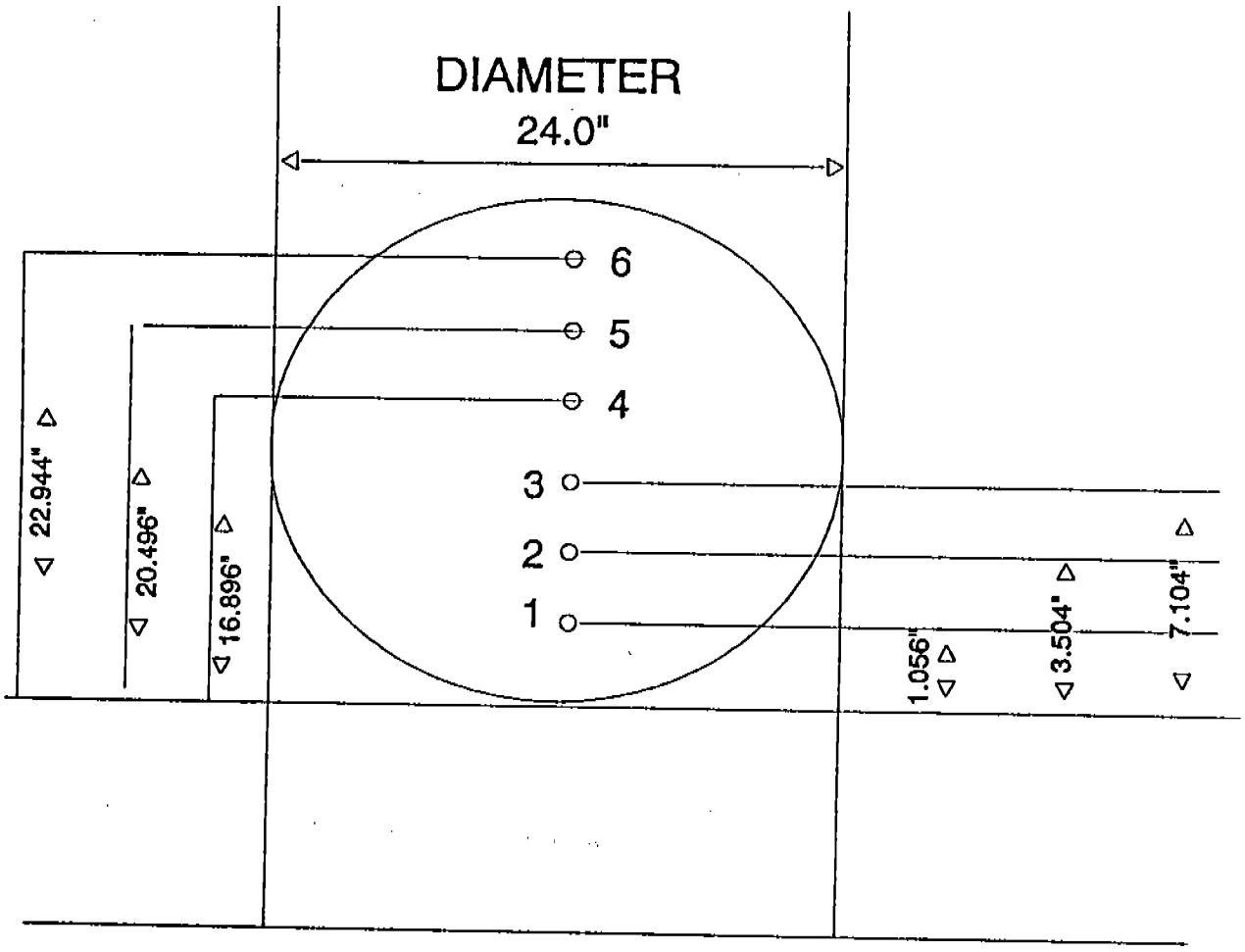

Figure 4.1. Inlet No. 1 Traverse Point Locations

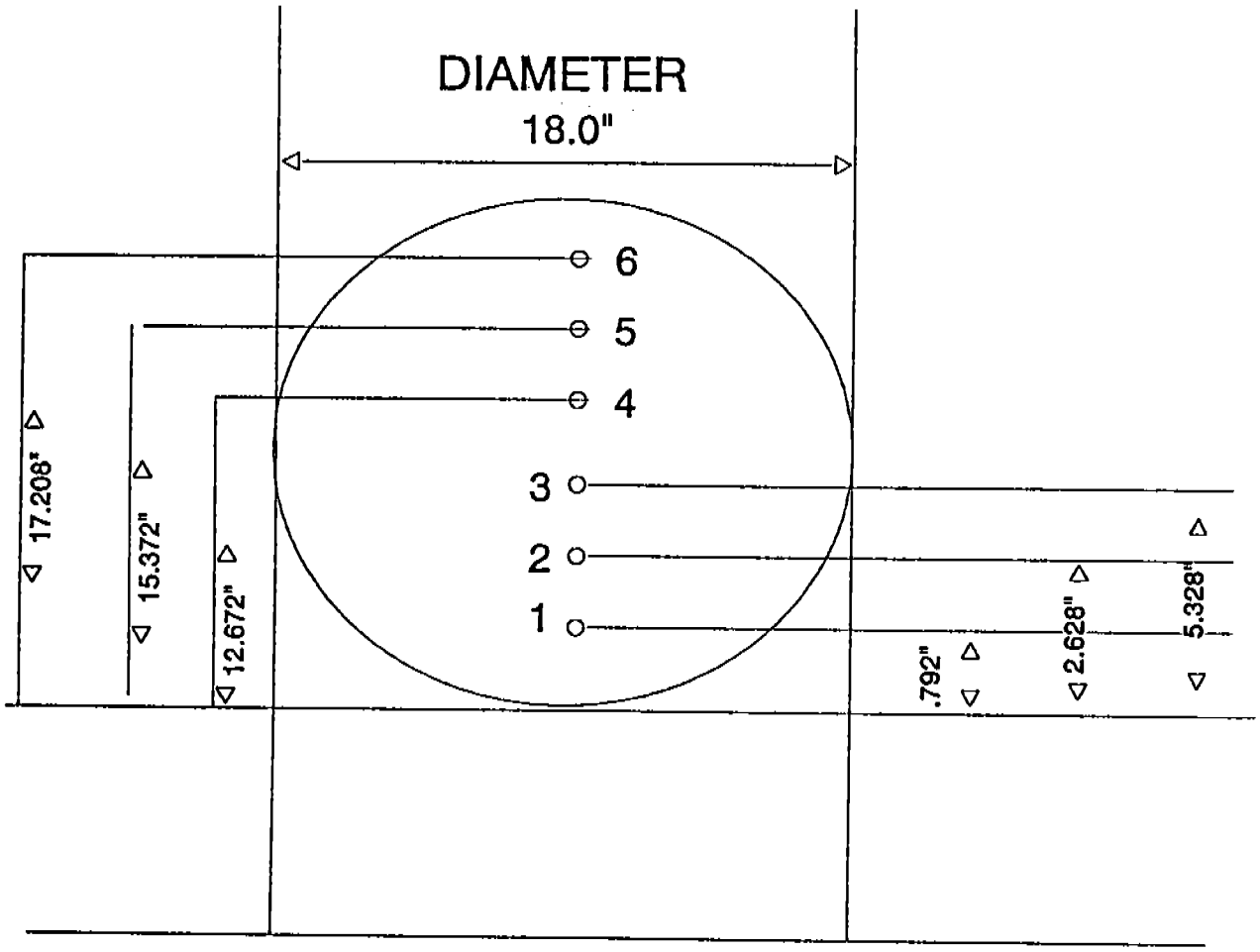

Figure 4.2. Inlet No. 2 Traverse Point Locations

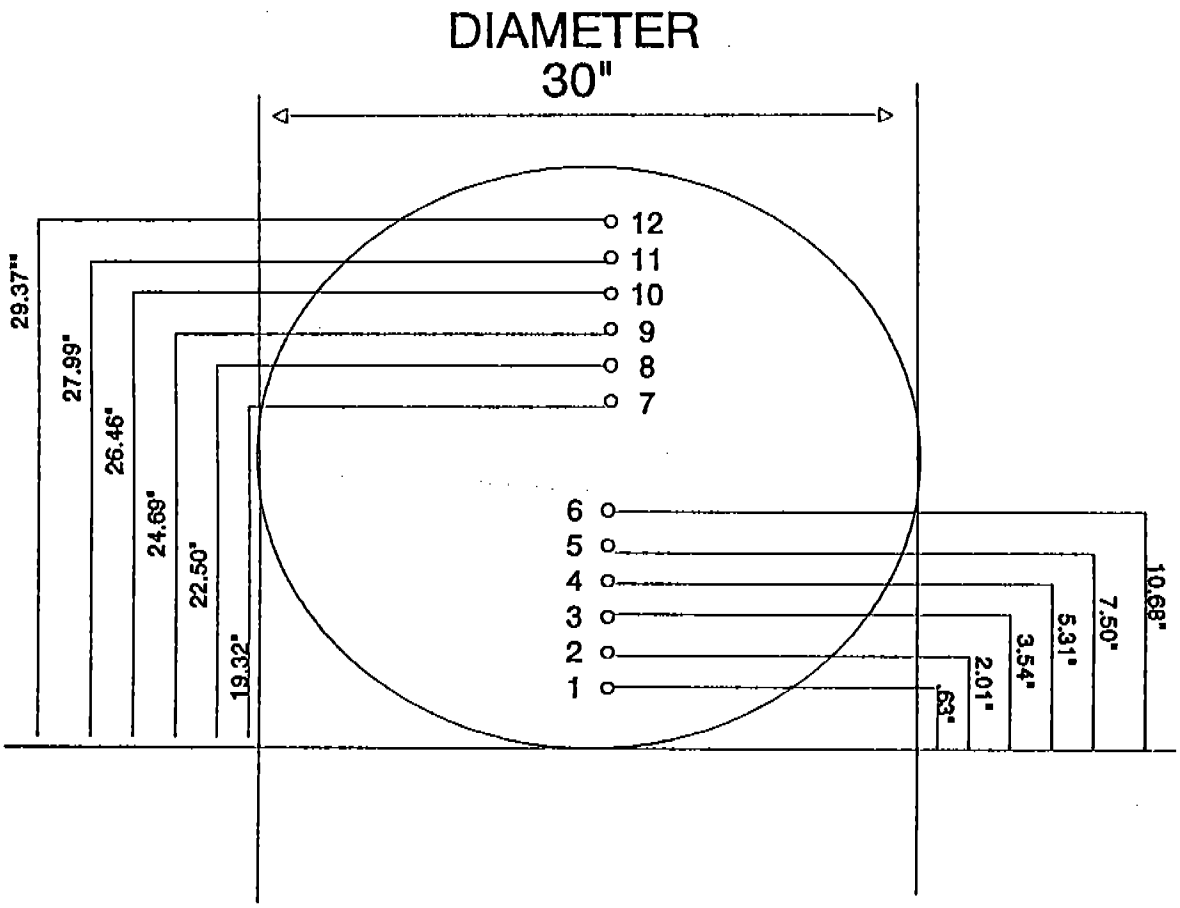

Figure 4.3. Outlet Traverse Point Locations

4.2 Air Sampling Test Methods

The test methods used during this project were in accordance with U.S. EPA Methods 1, 2, 4 and a modification of Method 13-B. Method 13-B, designed for total fluoride emission testing was used for the chromium particulate collection. A brief description of each method used in given below.

4.2.1 Traverse Points

U.S. EPA Method 1 "Sample and Velocity Traverses for Stationary Sources" was used to determine the location of traverse points. Cyclonic flow checks were made prior to testing. These checks indicated that cyclonic flow conditions did not exist at the sampling locations.

4.2.2 Stack Gas Velocity

U.S. EPA Method 2 "Determination of Stack Gas Velocity and Volumetric Flow Rate (Type "S" Pitot Tube)" was used to measure the stack gas velocity and temperature at each test point. Type K" thermocouples were affixed to type "S" pitot tubes having an assigned coefficient of 0.84. The velocity pressure was measured on an inclined manometer. The volumetric flow rate was calculated from the stack gas velocity and the stack cross-sectional area. Since this was an ambient source, a dry molecular weight of 28.95 lb/lb-mole was used.

4.2.3 Stack Gas Moisture

U.S. EPA Method 4 "Determination of Moisture Content in Stack Gas" was used to determine the stack gas moisture content. These moisture determinations were made during the modified Method 13-B test runs.

4.2.4 Modified Method 13-B Sampling Train

A modification of U.S. EPA Method 13-B "Determination of Total Fluoride Emission from Stationary Sources" was used to collect chromium emission samples. The sampling train consisted of a glass button-hook nozzle, an unheated "Pyrex" glass-lined probe and a series of four impingers.

Isokinetic samples were collected during each test run. During sampling, stack gases were pulled through the nozzle, past the probe and then through four impingers, where the chromium was collected and retained. The contents and the configuration of the impingers are given below.

1. The first impinger contained 100 ml of 0.1N NaOH.
2. The second impinger contained 100 ml of 0.1N NaOH.
3. The third impinger was empty.
4. The fourth impinger contained a weighted amount of silica gel (200 grams).

The remainder of the train consisted of a vacuum pump, dry gas meter, calibrated orifice and related temperature and pressure measuring equipment. Figure 4.4 shows a Schematic of the Modified U.S. EPA Method 13-B Sampling Train.

4.3 Sample Analysis Methods

The samples collected during the Modified 13-B testing were analyzed using one of three analytical techniques. The techniques were: 1) Colorimetry; 2) Inductively Coupled Plasma (ICP); and 3) Ion-Chromatography with a Post Column Reactor (ICPRC). Each analytical technique is briefly described below. ICP and ICPCR analyses were done by RTIL. The colorimetric analyses for hexavalent chromium were performed by AST personnel in the field.

CONTAINER I.D.	CONTAINER CONTENT
Impinger #1	Modified Greenburg-Smith - 100 ml of 0.1N NaOH
Impinger #2	Standard Greenburg-smith - 100 ml
Impinger #3	Modified Greenburg-Smith - Empty
Impinger #4	Modified Greenburg-Smith 200 grams of Silica Gel

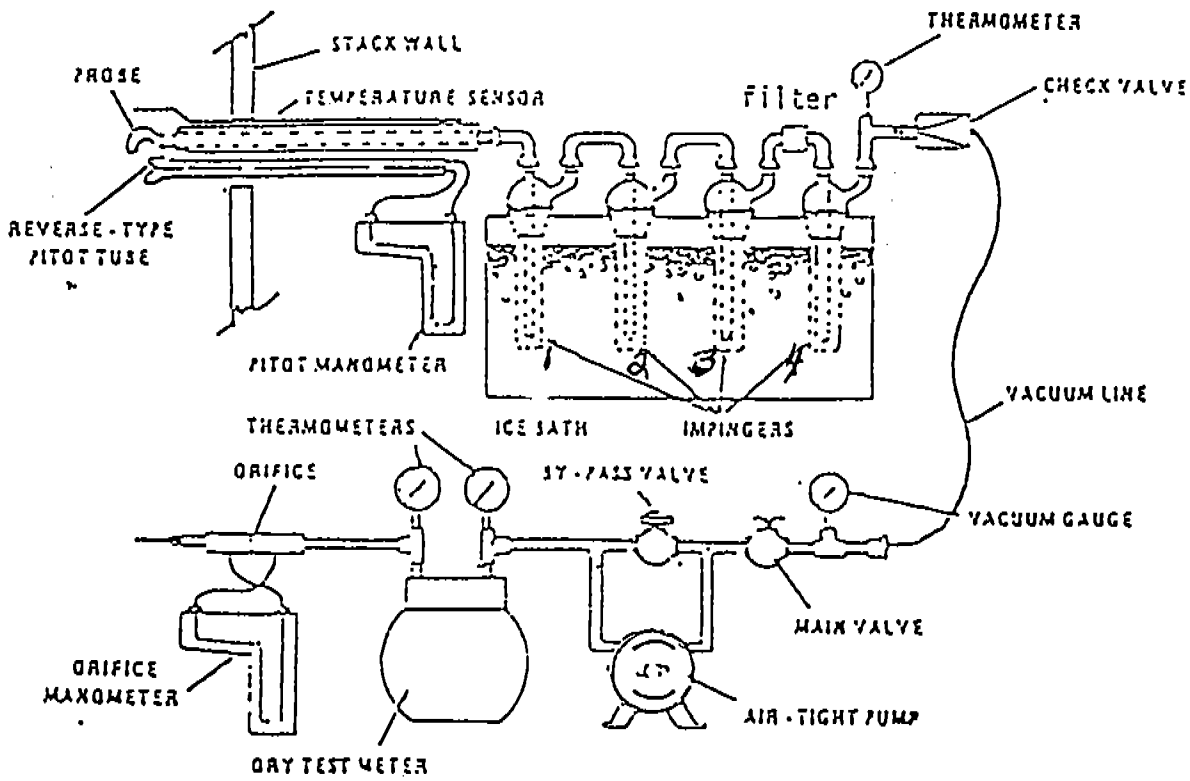

Figure 4.4. Schematic of the Modified U.S. EPA Method 13-B Sampling Train

4.3.1 Colorimetry

Colorimetry was used on-site to analyze samples (i.e., inlet, outlet, sample train blank and MPME water) for Cr-VI. A known aliquot of the sample was made to react with a diphenylcarbazide solution at a pH of 2.00$\pm$ 0.5. Optimum color development requires 10 minutes. The intensity of the color is measured at 540 nm. The details of this procedure are given in Appendices G and K.

4.3.2 Inductively Coupled Plasma (ICP)

ICP was used to determine total chromium in plating tank solution, MPME water, blank and emission samples. ICP is a simple and fast technique used for analysis of major and minor trace elements in samples of all kinds and matrices. It has a detection limit of one part per billion (ppb) or less. Samples are aspirated into a high temperature argon plasma. The argon plasma causes molecular breakdown, atomization and/or ionization and excitation of metals in solution. The excited atoms release characteristic radiation which is detected by a photomultiplier tube (PMT). The PMT produces an electrical current which is transformed into concentration values by reference to a standard.

4.3.3 Ion-Chromatography With Post Column Reactor (ICPCR)

ICPCR was used to determine hexavalent chromium (Cr-VI) in the plating tank solution, MPME water, blank and emission samples. Hexavalent chromium is chromatographed as CrO_4^{-2} on an ion column. After separation, the Cr-VI diphenylcarbazide complex is quantified by visible spectrometry at 520 nm. ICPCR has a sub-part per billion detection limit. Typically, ICPCR instrumentation consists of: 1) an ion column; 2) a visible spectrophotometer detector; and 3) an integrator. Details of the ICPCR analytical technique are provided in Appendix I.

Section 5

QUALITY ASSURANCE PROGRAM, TEST PROGRAM PERSONNEL AND SUMMARY OF FIELD ACTIVITIES

5.1 Quality Assurance Program

AST's QA program consisted of the field-related procedural activities and contract laboratory activities. A discussion of the QA activities is given below. The quality assurance activities employed during this project were performed to assure the quality of the data collected.

5.2 Data Review Prior To Report Preparation

All field data were recorded on standard data sheets. The field data sheets are in Appendix B. Field data were also recorded on sampling summary sheets. The sampling summary sheets are in Appendix C. Upon returning to the office, AST personnel reduced the field data collected. Afterwards, the results were summarized in a tabular format and reviewed for inconsistencies or other incidences that may indicate errors (data entries or calculations). Prior to reviewing the summary, spot checks of the field data reductions were made to ensure that all raw data were correct and complete.

5.3 Contract Laboratory Quality Assurance Procedures

The contract laboratory's QA program was established to ensure that its personnel produce valid analytical results. This goal is accomplished by regularly monitoring the reliability (i.e., precision, accuracy, reproducibility) of the reported results.

Quality assurance activities taken to ensure high quality analytical results include the following:

- Reagent blank samples were prepared and analyzed
- QC check standards were analyzed at the beginning of a test run to verify a standard curve
- Spiked blanks were prepared and analyzed to assure there were no interferences
- Duplicate samples were prepared and analyzed to assure the analytical precision
- Instrumentation performance was regularly monitored and repairs were made when required

5.4 Test Program Personnel

The personnel involved in the completion of this test program, their titles and their job affiliations are listed below.

Frank Clay	-	Task Manager, U.S. EPA
Tom Yaroch	-	Project Manager, AST
James Parker	-	Technician, AST
Michelle Knox	-	Laboratory Analyst, AST
Ron Kirkland	-	Meter Reader, AST
Jim Dini	-	Meter Reader, AST
Chuck Hames	-	Meter Reader, AST

5.5 Field Activities

The following is a summary of the field activities:

12/16/91	Traveled to Seattle, Washington, inventoried equipment, prepared site
12/17/91	Conducted one, six-hour measurement run at each site, recovered and analyzed emission samples
12/18/91	Conducted one, four-hour measurement run at each site, recovered and analyzed emission samples
12/19/91	Conducted one, four-hour measurement run at each site, recovered and analyzed emission samples; restored site, packed and shipped equipment
12/20/91	Traveled to Atlanta, Georgia

APPENDIX A

COMPUTER PRINT OUT OF FIELD DATA

Note:

The percentages of CO_2, O_2 and N_2 entered into the computerized spreadsheets were 0.70, 21.0 and 78.30 respectively.

=========
RUN DATA
=========

PLANT- Precision Engineering
DATE- December 17,1991
LOCATION- Seattle, Washington
RUN- Inlet 1-1

POINT #		TIME	GAS METER READING	VELOCITY DELTA P	ORIFICE PRESSURE ACTUAL	ORIFICE PRESSURE DESIRED	STACK TEMP	DRY GAS METER TEMP. IN	DRY GAS METER TEMP. OUT	%I PER POINT
A1	0	0.00	386.718	1.10	5.20	4.22	74	37	36	96.2
	1	5.00	392.000	1.00	4.70	3.86	75	43	37	113.7
	2	10.00	398.000	1.00	4.70	3.86	78	48	39	107.6
	3	15.00	403.700	1.00	4.70	3.87	81	52	41	99.7
	4	20.00	409.000	1.00	4.70	3.86	84	55	43	105.1
	5	25.00	414.600	1.00	4.70	3.88	84	58	45	104.6
A2	6	30.00	420.200	0.98	4.50	3.85	80	60	48	95.4
	1	35.00	425.300	0.98	4.50	3.80	89	62	49	103.4
	2	40.00	430.800	0.98	4.50	3.80	91	64	51	95.7
	3	45.00	435.900	0.98	4.50	3.80	92	64	52	105.1
	4	50.00	441.500	0.98	4.50	3.81	92	66	54	100.9
	5	55.00	446.900	0.98	4.50	3.80	94	67	55	100.9
A3	6	60.00	452.300	0.84	3.98	3.27	95	69	57	106.5
	1	65.00	457.600	0.84	3.98	3.27	96	69	58	104.5
	2	70.00	462.800	0.84	3.98	3.27	96	70	59	98.3
	3	75.00	467.700	0.84	3.98	3.27	97	71	60	100.2
	4	80.00	472.700	0.84	3.98	3.27	97	71	61	104.1
	5	85.00	477.900	0.83	3.93	3.24	98	72	62	106.6
A4	6	90.00	483.200	0.54	2.60	2.11	98	72	63	96.9
	1	95.00	487.100	0.54	2.60	2.11	98	71	63	106.9
	2	100.00	491.400	0.58	2.70	2.25	100	71	63	101.0
	3	105.00	495.600	0.58	2.70	2.24	103	71	63	101.2
	4	110.00	499.800	0.57	2.70	2.21	102	72	64	99.4
	5	115.00	503.900	0.57	2.70	2.21	101	72	64	99.3
A5	6	120.00	508.000	0.55	2.60	2.17	93	72	65	105.2
	1	125.00	512.300	0.67	3.20	2.64	93	72	65	97.7
	2	130.00	516.700	0.67	3.20	2.64	94	73	65	102.1
	3	135.00	521.300	0.67	3.20	2.64	94	74	65	102.0
	4	140.00	525.900	0.67	3.20	2.65	94	75	66	101.8
	5	145.00	530.500	0.67	3.20	2.65	94	75	67	99.5
A6	6	150.00	535.000	0.66	3.10	2.61	95	76	67	100.2
	1	155.00	539.500	0.65	3.10	2.57	95	76	67	112.2
	2	160.00	544.500	0.65	3.10	2.58	93	76	68	89.5
	3	165.00	548.500	0.64	3.00	2.54	92	75	67	101.6
	4	170.00	553.000	0.64	3.00	2.55	91	75	68	101.4
	5	175.00	557.500	0.69	3.30	2.75	90	75	68	100.2

=========
RUN DATA
=========

PLANT- Precision Engineering
DATE- December 17,1991
LOCATION- Seattle, Washington
RUN- Inlet 1-1

POINT #		TIME	GAS METER READING	VELOCITY DELTA P	ORIFICE PRESSURE ACTUAL	ORIFICE PRESSURE DESIRED	STACK TEMP	DRY GAS METER TEMP. IN	DRY GAS METER TEMP. OUT	%I PER POINT
B1	0	180.00	562.118	0.78	3.70	3.09	88	66	65	106.8
	1	185.00	567.300	0.78	3.70	3.10	87	68	64	96.7
	2	190.00	572.000	0.78	3.70	3.10	88	71	65	98.5
	3	195.00	576.800	0.77	3.70	3.05	91	72	65	107.6
	4	200.00	582.000	0.75	3.50	2.96	93	74	65	94.3
	5	205.00	586.500	0.77	3.70	3.04	94	74	66	103.4
B2	0	210.00	591.500	0.88	4.20	3.48	94	76	66	98.6
	1	215.00	596.600	0.90	4.20	3.55	96	76	67	103.3
	2	220.00	602.000	0.87	4.10	3.42	98	77	67	97.4
	3	225.00	607.000	0.87	4.10	3.42	99	78	68	97.3
	4	230.00	612.000	0.87	4.10	3.43	99	78	69	106.9
	5	235.00	617.500	0.87	4.10	3.43	100	79	70	102.9
B3	0	240.00	622.800	0.83	3.90	3.26	102	79	70	99.5
	1	245.00	627.800	0.83	3.90	3.26	101	79	70	95.5
	2	250.00	632.600	0.83	3.90	3.26	102	79	70	103.5
	3	255.00	637.800	0.83	3.90	3.25	104	80	71	97.5
	4	260.00	642.700	0.82	3.90	3.21	105	80	71	86.2
	5	265.00	647.000	0.83	3.90	3.25	105	80	71	119.6
B4	0	270.00	653.000	0.83	3.90	3.25	105	80	71	99.6
	1	275.00	658.000	0.85	4.00	3.34	103	80	71	98.3
	2	280.00	663.000	0.85	4.00	3.34	103	80	71	98.3
	3	285.00	668.000	0.86	4.10	3.36	105	80	71	103.8
	4	290.00	673.300	0.86	4.10	3.37	104	80	71	97.8
	5	295.00	678.300	0.86	4.10	3.38	103	80	71	111.4
B5	0	300.00	684.000	0.86	4.10	3.38	102	80	71	97.7
	1	305.0000	689.000	0.62	2.90	2.44	102	80	71	96.3
	2	310.0000	693.200	0.62	2.90	2.43	103	79	71	105.7
	3	315.0000	697.800	0.62	2.90	2.42	105	79	71	99.0
	4	320.0000	702.100	0.62	2.90	2.43	104	78	71	101.3
	5	325.0000	706.500	0.63	3.00	2.47	103	78	71	100.4
B6	0	330.0000	710.900	0.63	3.00	2.46	104	78	71	100.5
	1	335.0000	715.300	0.62	2.90	2.42	104	78	70	101.4
	2	340.0000	719.700	0.63	3.00	2.46	105	77	70	100.8
	3	345.0000	724.100	0.62	2.90	2.41	106	77	70	104.0
	4	350.0000	728.600	0.63	3.00	2.45	105	76	70	98.6
	5	355.0000	732.900	0.63	3.00	2.46	104	76	69	103.2
	6	360.0000	737.401	0.63	3.00	2.46	100	72	68	0.0

=========
RUN DATA
=========

PLANT- Precision Engineering
DATE- December 17,1991
LOCATION- Seattle, Washington
RUN- Inlet 1-2

POINT #		TIME	GAS METER READING	VELOCITY DELTA P	ORIFICE PRESSURE ACTUAL	ORIFICE PRESSURE DESIRED	STACK TEMP	DRY GAS METER TEMP. IN	DRY GAS METER TEMP. OUT	%I PER POINT
A1	0	0.00	639.925	1.00	4.40	4.07	58	53	51	95.7
	1	5.00	645.200	0.98	4.30	4.00	58	57	52	102.1
	2	10.00	650.800	0.98	4.30	3.94	70	62	53	99.0
	3	15.00	656.200	0.98	4.30	3.95	70	65	54	96.8
A2	0	20.00	661.500	0.87	3.70	3.52	70	66	55	110.1
	1	25.00	667.200	0.96	4.10	3.89	70	67	56	91.8
	2	30.00	672.200	0.92	3.95	3.72	71	68	57	103.1
	3	35.00	677.700	0.92	3.95	3.76	67	69	58	102.5
A3	0	40.00	683.200	0.83	3.56	3.38	71	71	60	94.1
	1	45.00	688.000	0.83	3.56	3.40	71	75	62	95.5
	2	50.00	692.900	0.83	3.56	3.41	71	76	63	103.1
	3	55.00	698.200	0.82	3.52	3.37	71	77	65	97.5
A4	0	60.00	703.200	0.73	3.13	3.01	70	77	66	99.0
	1	65.00	708.000	0.51	2.20	2.11	68	77	67	122.7
	2	70.00	713.000	0.65	2.70	2.69	68	77	67	91.4
	3	75.00	717.200	0.64	2.80	2.65	68	76	67	103.2
A5	0	80.00	721.900	1.10	4.70	4.58	65	76	67	87.3
	1	85.00	727.100	0.94	4.00	3.93	65	78	68	101.2
	2	90.00	732.700	0.94	4.00	3.95	65	82	71	97.0
	3	95.00	738.100	0.94	4.00	3.95	65	82	71	98.7
A6	0	100.00	743.600	0.55	2.36	2.29	71	82	72	112.7
	1	105.00	748.400	0.60	2.58	2.50	70	81	72	94.5
	2	110.00	752.600	0.60	2.58	2.51	68	80	72	98.9
	3	115.00	757.000	0.62	2.70	2.59	68	80	72	97.3

=========
RUN DATA
=========

PLANT- Precision Engineering
DATE- December 17,1991
LOCATION- Seattle, Washington
RUN- Inlet 1-2

POINT #		TIME	GAS METER READING	VELOCITY DELTA P	ORIFICE PRESSURE ACTUAL	ORIFICE PRESSURE DESIRED	STACK TEMP	DRY GAS METER TEMP. IN	DRY GAS METER TEMP. OUT	%I PER POINT
B1	0	120.00	761.400	0.68	2.90	2.80	69	69	69	107.2
	1	125.00	766.400	0.70	3.00	2.88	70	72	69	92.8
	2	130.00	770.800	0.73	3.10	3.01	70	74	68	94.9
	3	135.00	775.400	0.70	3.00	2.89	70	76	68	98.8
B2	0	140.00	780.100	0.70	3.00	2.89	71	76	68	96.8
	1	145.00	784.700	0.75	3.20	3.09	71	76	68	97.7
	2	150.00	789.500	0.75	3.20	3.10	70	77	69	97.4
	3	155.00	794.300	0.75	3.20	3.10	70	77	69	101.4
B3	0	160.00	799.300	0.70	3.00	2.91	67	77	68	94.3
	1	165.00	803.800	0.83	3.60	3.43	70	77	68	98.5
	2	170.00	808.900	0.85	3.70	3.51	70	77	68	97.4
	3	175.00	814.000	0.86	3.70	3.56	70	78	68	96.7
B4	4	180.00	819.100	0.60	2.60	2.49	68	78	69	88.1
	1	185.00	823.000	0.74	3.20	3.06	70	77	69	112.3
	2	190.00	828.500	0.74	3.20	3.06	70	77	69	96.0
	3	195.00	833.200	0.74	3.20	3.06	70	78	69	100.0
B5	0	200.00	838.100	0.65	2.80	2.69	70	78	69	97.9
	1	205.00	842.600	0.64	3.00	2.65	70	78	69	103.1
	2	210.00	847.300	0.70	3.00	2.90	70	78	69	96.5
	3	215.00	851.900	0.70	3.00	2.90	70	78	69	98.6
B6	0	220.00	856.600	0.66	2.80	2.73	70	78	69	103.6
	1	225.00	861.400	0.20	0.90	0.83	70	78	69	97.6
	2	230.00	863.900	0.16	0.70	0.66	70	75	69	100.6
	3	235.00	866.200	0.41	1.80	1.69	70	74	69	99.0
		240.00	869.809			0.00				0.0

=========
RUN DATA
=========

PLANT- Precision Engineering
DATE- December 17,1991
LOCATION- Seattle, Washington
RUN- Inlet 1-3

POINT #		TIME	GAS METER READING	VELOCITY DELTA P	ORIFICE PRESSURE ACTUAL	ORIFICE PRESSURE DESIRED	STACK TEMP	DRY GAS METER TEMP. IN	DRY GAS METER TEMP. OUT	%I PER POINT
A1	0	0.00	965.906	0.77	3.30	3.03	67	45	44	93.9
	1	5.00	970.300	0.77	3.30	3.05	67	49	45	97.8
	2	10.00	974.900	0.76	3.30	3.02	67	54	46	93.6
	3	15.00	979.300	0.77	3.30	3.08	67	57	48	96.8
A2	0	20.00	983.900	0.91	3.90	3.64	69	59	49	112.3
	1	25.00	989.700	0.92	4.00	3.69	69	62	51	101.6
	2	30.00	995.000	0.92	4.00	3.71	69	65	52	89.7
	3	35.00	999.700	0.91	3.90	3.68	69	66	54	93.8
A3	0	40.00	1004.600	0.92	3.87	3.73	69	67	55	91.2
	1	45.00	1009.400	0.91	3.90	3.70	69	69	57	93.2
	2	50.00	1014.300	0.92	4.00	3.75	69	70	58	92.6
	3	55.00	1019.200	0.92	4.00	3.76	69	71	59	77.3
A4	0	60.00	1023.300	0.69	2.96	2.82	70	72	60	110.7
	1	65.00	1028.400	0.78	3.40	3.19	70	72	61	93.9
	2	70.00	1033.000	0.78	3.40	3.19	70	73	62	93.7
	3	75.00	1037.600	0.77	3.30	3.15	70	73	63	94.2
A5	0	80.00	1042.200	0.92	4.00	3.78	69	74	63	91.8
	1	85.00	1047.100	0.90	3.90	3.71	69	75	64	88.8
	2	90.00	1051.800	0.85	3.70	3.50	69	75	65	93.2
	3	95.00	1056.600	0.87	3.70	3.59	69	76	66	90.0
A6	0	100.00	1061.300	0.87	3.70	3.58	70	76	66	94.0
	1	105.00	1066.200	0.85	3.70	3.51	70	77	67	94.9
	2	110.00	1071.100	0.85	3.70	3.51	70	78	67	92.9
	3	115.00	1075.900	0.86	3.70	3.56	70	78	68	92.2

=========
RUN DATA
=========

PLANT- Precision Engineering
DATE- December 17,1991
LOCATION- Seattle, Washington
RUN- Inlet 1-3

POINT #		TIME	GAS METER READING	VELOCITY DELTA P	ORIFICE PRESSURE ACTUAL	ORIFICE PRESSURE DESIRED	STACK TEMP	DRY GAS METER TEMP. IN	DRY GAS METER TEMP. OUT	%I PER POINT
B1	0	120.00	1080.700	1.00	4.30	4.10	70	69	68	93.6
	1	125.00	1085.900	0.99	4.26	4.07	70	73	67	92.0
	2	130.00	1091.000	1.00	4.30	4.12	70	76	67	93.1
	3	135.00	1096.200	0.98	4.20	4.05	70	77	68	86.6
B2	0	140.00	1101.000	1.00	4.20	4.12	72	78	68	96.5
	1	145.00	1106.400	1.00	4.20	4.12	72	78	69	87.5
	2	150.00	1111.300	1.00	4.30	4.13	72	79	69	94.6
	3	155.00	1116.600	1.00	4.30	4.13	72	79	69	87.4
B3	0	160.00	1121.500	0.94	3.40	3.88	72	79	70	95.4
	1	165.00	1126.700	0.94	3.40	3.88	72	79	70	91.7
	2	170.00	1131.700	0.95	4.00	3.93	72	80	70	91.3
	3	175.00	1136.700	0.95	4.00	3.93	72	80	70	95.0
B4	4	180.00	1141.900	0.80	3.40	3.32	70	80	71	97.1
	1	185.00	1146.800	0.89	3.80	3.70	70	80	71	92.1
	2	190.00	1151.700	0.89	3.80	3.70	70	80	71	92.1
	3	195.00	1156.600	0.89	3.80	3.70	70	80	71	94.0
B5	0	200.00	1161.600	0.83	3.56	3.44	71	80	71	89.6
	1	205.00	1166.200	0.83	3.56	3.44	71	79	71	74.1
	2	210.00	1170.000	0.83	3.56	3.44	71	79	71	111.1
	3	215.00	1175.700	0.83	3.60	3.44	71	79	71	97.5
B6	0	220.00	1180.700	0.83	3.60	3.44	71	79	71	89.7
	1	225.00	1185.300	0.83	3.56	3.44	71	78	71	89.8
	2	230.00	1189.900	0.83	3.56	3.43	71	78	70	95.7
	3	235.00	1194.800	0.83	3.60	3.43	71	77	70	92.0
	0	240.00	1199.503			0.00				0.0

=========
RUN DATA
=========

PLANT- Precicion Engineering
DATE- December 18,1991
LOCATION- Seattle, Washington
RUN- Inlet 2-1

POINT #		TIME	GAS METER READING	VELOCITY DELTA P	ORIFICE PRESSURE ACTUAL	ORIFICE PRESSURE DESIRED	STACK TEMP	DRY GAS METER TEMP. IN	DRY GAS METER TEMP. OUT	%I PER POINT
A1	0	0.00	269.985	0.80	3.70	3.24	71	36	36	67.6
	1	5.00	273.200	0.78	3.80	3.16	72	38	35	108.7
	2	10.00	278.300	0.78	3.80	3.17	74	44	36	108.1
	3	15.00	283.400	0.78	3.80	3.17	77	49	38	105.6
	4	20.00	288.400	0.78	3.80	3.17	80	52	40	107.4
	5	25.00	293.500	0.78	3.70	3.18	80	54	42	104.9
A2	6	30.00	298.500	0.55	2.60	2.25	81	57	44	109.2
	1	35.00	302.900	0.57	2.70	2.33	84	58	46	107.3
	2	40.00	307.300	0.55	2.60	2.24	86	59	47	104.2
	3	45.00	311.500	0.56	2.65	2.28	88	60	49	105.6
	4	50.00	315.800	0.55	2.60	2.25	88	61	50	106.4
	5	55.00	320.100	0.55	2.60	2.25	89	62	51	106.3
A3	6	60.00	324.400	0.38	1.80	1.55	90	63	52	109.7
	1	65.00	328.100	0.37	1.75	1.51	91	63	54	105.0
	2	70.00	331.600	0.37	1.75	1.52	90	64	55	110.7
	3	75.00	335.300	0.36	1.71	1.49	87	64	56	120.9
	4	80.00	339.300	0.36	1.71	1.48	91	67	58	90.5
	5	85.00	342.300	0.36	1.71	1.48	89	65	57	105.7
A4	6	90.00	345.800	0.95	4.50	3.91	91	66	58	101.1
	1	95.00	351.200	0.97	4.60	3.98	94	69	59	105.5
	2	100.00	356.900	0.98	4.65	4.02	96	70	60	103.1
	3	105.00	362.500	0.98	4.65	4.00	99	71	60	105.2
	4	110.00	368.200	0.96	4.55	3.92	100	72	61	106.1
	5	115.00	373.900	0.96	4.55	3.93	99	73	62	105.8
A5	6	120.00	379.600	1.50	7.10	6.34	82	73	63	94.1
	1	125.00	386.000	1.10	5.21	4.60	89	74	64	104.7
	2	130.00	392.100	1.20	5.69	5.00	91	74	64	102.2
	3	135.00	398.300	1.20	5.69	4.99	93	75	65	102.2
	4	140.00	404.500	1.20	5.69	5.00	93	76	65	105.4
	5	145.00	410.900	1.10	5.20	4.58	94	76	66	101.4
A6	6	150.00	416.800	1.10	5.20	4.56	96	77	66	104.9
	1	155.00	422.900	1.40	6.60	5.92	86	77	67	95.4
	2	160.00	429.200	1.40	6.60	5.94	85	78	68	86.1
	3	165.00	434.900	1.40	6.60	5.96	83	77	68	75.4
	4	170.00	439.900	1.40	6.60	5.97	82	77	68	107.0
	5	175.00	447.000	1.40	6.60	6.01	79	78	68	90.8

=========
RUN DATA
=========

PLANT- Precicion Engineering
DATE- December 18,1991
LOCATION- Seattle, Washington
RUN- Inlet 2-1

POINT #		TIME	GAS METER READING	VELOCITY DELTA P	ORIFICE PRESSURE ACTUAL	ORIFICE PRESSURE DESIRED	STACK TEMP	DRY GAS METER TEMP. IN	DRY GAS METER TEMP. OUT	%I PER POINT
B1	0	180.00	453.045	0.65	3.10	2.70	88	65	65	110.8
	1	185.00	458.000	1.10	5.20	4.59	88	69	65	94.7
	2	190.00	463.500	1.10	5.20	4.60	88	72	65	103.0
	3	195.00	469.500	1.10	5.20	4.61	88	74	65	104.5
	4	200.00	475.600	1.10	5.20	4.61	89	75	66	102.7
	5	205.00	481.600	1.10	5.20	4.59	92	76	66	104.6
B2	0	210.00	487.700	1.10	5.20	4.58	94	76	66	103.1
	1	215.00	493.700	1.10	5.20	4.57	96	77	67	103.1
	2	220.00	499.700	1.10	5.20	4.58	95	78	67	104.6
	3	225.00	505.800	1.10	5.20	4.58	96	78	68	104.6
	4	230.00	511.900	1.10	5.20	4.57	97	79	68	104.6
	5	235.00	518.000	1.10	5.20	4.58	96	79	69	102.7
B3	0	240.00	524.000	0.83	3.90	3.46	96	80	69	109.9
	1	245.00	529.600	0.79	3.70	3.29	97	79	70	104.6
	2	250.00	534.800	0.79	3.70	3.28	99	79	70	100.8
	3	255.00	539.800	0.78	3.70	3.23	100	79	70	109.6
	4	260.00	545.200	0.79	3.70	3.26	102	79	70	101.1
	5	265.00	550.200	0.77	3.60	3.18	102	79	70	94.2
B4	0	270.00	554.800	0.52	2.40	2.14	102	78	70	134.2
	1	275.00	560.200	0.50	2.40	2.06	102	77	70	109.1
	2	280.00	564.500	0.50	2.40	2.06	102	77	70	106.6
	3	285.00	568.700	0.50	2.40	2.06	102	76	70	104.1
	4	290.00	572.800	0.50	2.40	2.06	101	76	69	106.7
	5	295.00	577.000	0.50	2.40	2.06	102	76	69	109.3
B5	0	300.00	581.300	0.62	2.90	2.55	102	76	69	93.7
	1	305.0000	585.400	0.74	3.50	3.04	103	76	69	102.8
	2	310.0000	590.300	0.74	3.50	3.04	103	77	69	104.8
	3	315.0000	595.300	0.75	3.50	3.07	105	77	69	104.2
	4	320.0000	600.300	0.75	3.50	3.07	105	77	69	104.2
	5	325.0000	605.300	0.71	3.30	2.91	105	77	69	104.9
B6	0	330.0000	610.200	0.71	3.30	2.91	104	77	69	104.9
	1	335.0000	615.100	0.71	3.30	2.91	104	77	69	104.9
	2	340.0000	620.000	0.71	3.30	2.91	104	76	68	105.0
	3	345.0000	624.900	0.75	3.50	3.07	105	76	69	104.3
	4	350.0000	629.900	0.70	3.30	2.86	104	75	68	103.7
	5	355.0000	634.700	0.74	3.50	3.03	104	75	68	103.1
	6	360.0000	639.604			0.00				0.0

=========
RUN DATA
=========

PLANT- Precision Engineering
DATE- December 18,1991
LOCATION- Seattle, Washington
RUN- Inlet 2-2

POINT #		TIME	GAS METER READING	VELOCITY DELTA P	ORIFICE PRESSURE ACTUAL	ORIFICE PRESSURE DESIRED	STACK TEMP	DRY GAS METER TEMP. IN	DRY GAS METER TEMP. OUT	%I PER POINT
A1	0	0.00	739.815	0.95	4.18	3.89	89	57	56	89.8
	1	5.00	744.600	0.93	4.09	4.00	70	68	60	93.6
	2	10.00	749.700	0.93	4.09	3.97	70	63	57	92.5
	3	15.00	754.700	0.95	4.18	4.07	70	66	58	82.1
A2	0	20.00	759.200	0.83	3.60	3.56	70	67	59	106.9
	1	25.00	764.700	0.83	3.60	3.58	70	71	61	92.8
	2	30.00	769.500	0.83	3.60	3.56	71	69	60	93.2
	3	35.00	774.300	0.83	3.60	3.57	71	70	61	91.0
A3	0	40.00	779.000	0.36	1.50	1.56	71	74	64	116.3
	1	45.00	783.000	0.35	1.50	1.52	71	76	66	91.0
	2	50.00	786.100	0.38	1.70	1.66	71	77	67	92.9
	3	55.00	789.400	0.40	1.80	1.74	71	77	68	90.5
A4	0	60.00	792.700	0.89	3.80	3.88	71	77	69	73.8
	1	65.00	796.700	0.88	3.80	3.85	71	79	69	90.8
	2	70.00	801.600	0.88	3.80	3.85	71	78	70	90.8
	3	75.00	806.500	0.88	3.80	3.85	71	78	70	92.6
A5	0	80.00	811.500	0.92	4.00	4.03	71	79	70	90.5
	1	85.00	816.500	0.92	4.00	4.04	70	79	72	90.3
	2	90.00	821.500	0.95	4.10	4.20	70	84	74	90.0
	3	95.00	826.600	0.95	4.10	4.20	70	84	74	90.0
A6	0	100.00	831.700	1.50	6.45	6.65	68	83	74	77.7
	1	105.00	837.200	1.50	6.45	6.64	68	82	74	79.1
	2	110.00	842.800	1.50	6.45	6.63	68	80	74	79.3
	3	115.00	848.400	1.50	6.45	6.63	68	79	74	79.4

========
RUN DATA
========

PLANT- Precision Engineering
DATE- December 18,1991
LOCATION- Seattle, Washington
RUN- Inlet 2-2

POINT #		TIME	GAS METER READING	VELOCITY DELTA P	ORIFICE PRESSURE ACTUAL	ORIFICE PRESSURE DESIRED	STACK TEMP	DRY GAS METER TEMP. IN	DRY GAS METER TEMP. OUT	%I PER POINT
B1	0	120.00	854.000	1.00	4.30	4.37	68	70	71	75.1
	1	125.00	858.300	1.00	4.30	4.38	68	73	70	87.1
	2	130.00	863.300	1.00	4.30	4.40	68	78	70	91.9
	3	135.00	868.600	1.00	4.30	4.41	68	80	71	89.9
B2	0	140.00	873.800	1.00	4.30	4.41	68	81	71	89.9
	1	145.00	879.000	1.00	4.30	4.41	68	81	71	91.6
	2	150.00	884.300	1.00	4.30	4.41	68	81	71	89.9
	3	155.00	889.500	1.00	4.30	4.42	68	81	72	93.2
B3	0	160.00	894.900	0.90	3.80	3.98	68	81	72	87.3
	1	165.00	899.700	0.92	3.90	4.06	68	81	72	88.1
	2	170.00	904.600	0.90	3.80	3.97	69	81	72	89.2
	3	175.00	909.500	0.92	3.80	4.05	69	80	72	88.3
B4	4	180.00	914.400	0.48	2.10	2.11	69	80	72	96.8
	1	185.00	918.300	0.31	1.30	1.36	69	78	72	92.7
	2	190.00	921.300	0.31	1.30	1.36	69	77	71	89.8
	3	195.00	924.200	0.31	1.30	1.36	69	76	71	93.3
B5	0	200.00	927.210	0.50	2.20	2.19	69	76	70	87.9
	1	205.00	930.800	0.56	2.40	2.46	68	77	71	92.3
	2	210.00	934.800	0.56	2.40	2.46	68	77	71	90.0
	3	215.00	938.700	0.56	2.40	2.46	69	78	71	90.0
B6	0	220.00	942.600	1.10	4.70	4.84	68	78	71	86.0
	1	225.00	947.800	1.10	4.70	4.85	68	80	71	87.5
	2	230.00	953.100	1.20	5.10	5.30	68	81	71	86.9
	3	235.00	958.600	1.30	5.50	5.75	68	82	72	86.6
	0	240.00	964.306			0.00				0.0

=========
RUN DATA
=========

PLANT- Precision Engineering
DATE- December 19,1991
LOCATION- Seattle, Washington
RUN- Inlet 2-3

POINT #		TIME	GAS METER READING	VELOCITY DELTA P	ORIFICE PRESSURE ACTUAL	ORIFICE PRESSURE DESIRED	STACK TEMP	DRY GAS METER TEMP. IN	DRY GAS METER TEMP. OUT	%I PER POINT
A1	0	0.00	870.010	0.85	3.65	3.53	68	47	46	96.3
	1	5.00	874.800	0.79	3.40	3.26	68	46	42	100.5
	2	10.00	879.600	0.80	3.40	3.32	68	51	43	99.3
	3	15.00	884.400	0.80	3.40	3.34	68	55	45	98.7
A2	0	20.00	889.200	0.45	1.93	1.90	65	58	47	116.6
	1	25.00	893.500	0.50	2.15	2.12	65	59	49	97.5
	2	30.00	897.300	0.45	1.93	1.91	65	61	51	99.7
	3	35.00	901.000	0.48	2.06	2.04	65	62	52	78.1
A3	0	40.00	904.000	0.32	1.37	1.36	67	63	53	121.0
	1	45.00	907.800	0.30	1.29	1.28	67	63	54	98.5
	2	50.00	910.800	0.30	1.29	1.28	67	64	55	98.3
	3	55.00	913.800	0.30	1.29	1.28	67	64	56	78.6
A4	0	60.00	916.200	0.74	3.18	3.17	66	65	57	112.8
	1	65.00	921.600	0.75	3.20	3.23	66	68	58	97.1
	2	70.00	926.300	0.75	3.20	3.24	66	70	59	96.9
	3	75.00	931.000	0.75	3.20	3.24	66	71	60	96.7
A5	0	80.00	935.700	1.00	4.30	4.31	68	72	61	94.7
	1	85.00	941.000	1.00	4.30	4.32	68	73	62	96.3
	2	90.00	946.400	1.00	4.30	4.33	68	73	63	98.0
	3	95.00	951.900	1.00	4.30	4.33	68	74	64	97.8
A6	0	100.00	957.400	1.00	4.30	4.35	67	75	64	94.0
	1	105.00	962.700	0.95	4.00	4.14	67	76	65	99.9
	2	110.00	968.200	0.95	4.00	4.14	67	76	66	94.3
	3	115.00	973.400	0.97	4.17	4.24	67	77	67	95.0

=========
RUN DATA
=========

PLANT- Precision Engineering
DATE- December 19,1991
LOCATION- Seattle, Washington
RUN- Inlet 2-3

POINT #		TIME	GAS METER READING	VELOCITY DELTA P	ORIFICE PRESSURE ACTUAL	ORIFICE PRESSURE DESIRED	STACK TEMP	DRY GAS METER TEMP. IN	DRY GAS METER TEMP. OUT	%I PER POINT
B1	0	120.00	978.700	1.00	4.30	4.34	67	70	67	101.3
	1	125.00	984.400	1.20	5.16	5.22	67	73	66	95.8
	2	130.00	990.300	1.20	5.16	5.24	67	76	67	95.4
	3	135.00	996.200	1.20	5.16	5.25	67	78	68	96.7
B2	0	140.00	1002.200	1.20	5.16	5.22	70	78	68	92.2
	1	145.00	1007.900	1.20	5.16	5.22	70	78	68	100.2
	2	150.00	1014.100	1.20	5.16	5.23	70	79	69	93.6
	3	155.00	1019.900	1.20	5.16	5.23	70	79	69	96.8
B3	0	160.00	1025.900	0.95	4.08	4.14	70	80	69	99.4
	1	165.00	1031.400	0.95	4.08	4.14	70	79	70	97.6
	2	170.00	1036.800	0.97	4.17	4.23	70	79	70	96.6
	3	175.00	1042.200	0.95	4.08	4.15	70	80	70	95.7
B4	4	180.00	1047.500	0.35	1.50	1.52	71	79	70	145.2
	1	185.00	1052.400	0.37	1.60	1.61	71	78	71	98.0
	2	190.00	1055.800	0.36	1.50	1.56	71	76	70	99.6
	3	195.00	1059.200	0.36	1.50	1.56	71	76	70	99.6
B5	0	200.00	1062.600	0.37	1.60	1.61	68	75	70	98.1
	1	205.00	1066.000	0.40	1.72	1.74	68	75	69	83.3
	2	210.00	1069.000	0.40	1.72	1.74	68	75	69	111.1
	3	215.00	1073.000	0.48	2.06	2.09	68	75	69	96.4
B6	0	220.00	1076.800	0.45	1.93	1.96	68	74	68	97.1
	1	225.00	1080.500	0.42	1.80	1.82	69	74	68	103.3
	2	230.00	1084.300	0.45	1.93	1.95	70	73	68	97.4
	3	235.00	1088.000	0.42	1.80	1.82	70	73	67	98.3
	0	240.00	1091.605			0.00				0.0

==========
RUN DATA
==========

PLANT- Precision Engineering
DATE- December 17,1991
LOCATION- Seattle, Washington
RUN- Outlet 1

POINT #	TIME	GAS METER READING	VELOCITY DELTA P	ORIFICE PRESSURE ACTUAL	ORIFICE PRESSURE DESIRED	STACK TEMP	DRY GAS METER TEMP. IN	DRY GAS METER TEMP. OUT	%I PER POINT
A 1	0.00	474.035	0.83	3.90	3.10	80	39	38	108.8
	5.00	479.200	0.84	4.00	3.16	80	45	39	108.1
	10.00	484.400	0.84	4.00	3.16	83	51	40	103.5
A 2	15.00	489.400	0.82	3.90	3.09	87	56	42	114.9
	20.00	494.900	0.83	3.90	3.13	89	60	44	107.5
	25.00	500.100	0.82	3.90	3.10	91	63	46	107.8
A 3	30.00	505.300	0.81	3.80	3.07	92	66	48	106.0
	35.00	510.400	0.81	3.80	3.06	95	68	50	107.9
	40.00	515.600	0.80	3.80	3.02	98	70	53	108.4
A 4	45.00	520.800	0.80	3.80	3.01	101	71	54	106.3
	50.00	525.900	0.76	3.60	2.88	101	73	57	108.5
	55.00	531.000	0.76	3.60	2.89	100	74	58	106.1
A 5	60.00	536.000	0.72	3.40	2.73	102	76	59	108.9
	65.00	541.000	0.72	3.40	2.74	102	76	60	106.6
	70.00	545.900	0.72	3.40	2.74	103	77	62	130.2
A 6	75.00	551.900	0.68	3.20	2.58	107	78	64	84.9
	80.00	555.700	0.66	3.10	2.50	107	78	65	108.7
	85.00	560.500	0.66	3.10	2.50	110	80	66	104.2
A 7	90.00	565.100	0.58	2.70	2.20	109	80	67	113.2
	95.00	569.800	0.61	2.80	2.30	112	80	67	108.4
	100.00	574.400	0.60	2.80	2.26	113	80	68	111.6
A 8	105.00	579.100	0.66	3.10	2.48	117	82	69	104.3
	110.00	583.700	0.64	3.00	2.41	116	82	70	114.9
	115.00	588.700	0.64	3.00	2.41	116	82	71	107.9
A 9	120.00	593.400	0.66	3.10	2.49	116	83	71	113.0
	125.00	598.40	0.66	3.10	2.49	117	83	72	99.4
	130.00	602.80	0.66	3.10	2.49	117	83	72	115.2
A 10	135.00	607.90	0.69	3.20	2.59	119	84	72	106.2
	140.00	612.70	0.65	3.08	2.45	118	85	73	120.4
	145.00	618.00	0.65	3.08	2.47	118	85	79	103.9
A 11	150.00	622.60	0.69	3.20	2.60	120	85	74	108.2
	155.00	627.50	0.67	3.20	2.52	120	86	74	109.7
	160.00	632.40	0.66	3.10	2.49	119	86	74	112.6
A 12	165.00	637.40	0.69	3.20	2.61	118	85	75	101.3
	170.00	642.00	0.70	3.30	2.64	119	86	75	118.1
	175.00	647.40	0.67	3.20	2.54	117	86	75	114.0

=========
RUN DATA
=========

PLANT- Precision Engineering
DATE- December 17,1991
LOCATION- Seattle, Washington
RUN- Outlet 1

POINT #	TIME	GAS METER READING	VELOCITY DELTA P	ORIFICE PRESSURE ACTUAL	ORIFICE PRESSURE DESIRED	STACK TEMP	DRY GAS METER TEMP. IN	DRY GAS METER TEMP. OUT	%I PER POINT
B 1	180.00	652.51	1.10	5.20	4.17	108	73	73	107.2
	185.0000	658.6000	1.2000	5.7000	4.60	105	78	72	109.0
	190.0000	665.1000	1.2000	5.7000	4.59	108	82	73	112.1
B 2	195.0000	671.8000	1.1000	5.2000	4.23	106	84	73	113.0
	200.0000	678.3000	1.0000	4.7400	3.86	106	86	73	110.9
	205.0000	684.4000	1.0000	4.7400	3.85	107	86	74	100.0
B 3	210.0000	689.9000	0.9300	4.4000	3.57	109	86	74	113.2
	215.0000	695.9000	0.9300	4.4000	3.58	109	87	75	96.1
	220.0000	701.0000	0.9300	4.4000	3.58	110	88	76	118.6
B 4	225.0000	707.3000	0.8200	3.9000	3.15	110	88	76	102.1
	230.0000	712.4000	0.8300	3.9000	3.20	109	88	76	115.3
	235.0000	718.2000	0.8300	3.9000	3.20	108	88	76	93.4
B 5	240.0000	722.9000	0.7400	3.5000	2.85	110	88	78	124.0
	245.0000	728.800	0.740	3.500	2.84	112	88	77	92.7
	250.0000	733.200	0.730	3.500	2.79	114	88	77	121.1
B 6	255.0000	738.900	0.660	3.10	2.51	117	88	77	111.9
	260.00	743.900	0.69	3.30	2.62	118	88	78	113.9
	265.00	749.100	0.69	3.30	2.62	118	87	77	107.5
B 7	270.00	754.000	0.72	3.40	2.73	119	88	77	118.2
	275.00	759.500	0.72	3.40	2.72	120	87	77	101.2
	280.00	764.200	0.73	3.40	2.76	120	87	77	111.2
B 8	285.00	769.400	0.73	3.40	2.76	120	87	77	109.0
	290.00	774.500	0.75	3.60	2.84	120	88	78	101.1
	295.00	779.300	0.74	3.50	2.79	121	87	77	119.0
B 9	300.00	784.900	0.76	3.60	2.87	121	88	78	108.9
	305.0000	790.100	0.75	3.60	2.84	120	88	78	103.2
	310.0000	795.000	0.75	3.60	2.84	119	88	78	122.1
B 10	315.0000	800.800	0.73	3.50	2.77	119	88	78	108.8
	320.0000	805.900	0.73	3.50	2.77	118	87	78	106.6
	325.0000	810.900	0.74	3.50	2.81	118	87	77	112.4
B 11	330.0000	816.200	0.74	3.50	2.80	119	87	78	110.2
	335.0000	821.400	0.73	3.50	2.76	119	87	77	111.1
	340.0000	826.600	0.74	3.50	2.80	119	86	77	110.4
B 12	345.0000	831.800	0.78	3.70	2.95	120	86	77	109.8
	350.0000	837.100	0.80	3.80	3.03	119	86	77	110.4
	355.0000	842.500	0.81	3.80	3.07	119	86	78	110.0
	360.0000	847.922			0.00				0.0

=========
RUN DATA
=========

PLANT- Precision Engineering
DATE- December 18,1991
LOCATION- Seattle, Washington
RUN- Outlet 2

POINT #		TIME	GAS METER READING	VELOCITY DELTA P	ORIFICE PRESSURE ACTUAL	ORIFICE PRESSURE DESIRED	STACK TEMP	DRY GAS METER TEMP. IN	DRY GAS METER TEMP. OUT	%I PER POINT
A	1	0.00	848.068	0.72	3.08	2.84	67	56	55	103.7
	1	5.00	852.900	0.73	3.10	2.87	71	58	55	94.0
A	2	10.00	857.300	0.82	3.50	3.24	70	62	55	114.4
	2	15.00	863.000	0.83	3.60	3.29	71	66	56	97.4
A	3	20.00	867.900	0.81	3.50	3.22	72	69	58	106.2
	3	25.00	873.200	0.81	3.50	3.24	70	71	58	101.8
A	4	30.00	878.300	0.79	3.40	3.15	73	73	60	100.9
	4	35.00	883.300	0.79	3.40	3.17	71	75	60	106.6
A	5	40.00	888.600	0.75	3.20	3.03	70	77	62	98.6
	5	45.00	893.400	0.74	3.20	2.99	71	79	64	103.1
A	6	50.00	898.400	0.68	2.90	2.76	70	81	65	102.8
	6	55.00	903.200	0.68	2.90	2.75	72	80	67	98.6
A	7	60.00	907.800	0.68	2.90	2.77	71	83	68	104.5
	7	65.00	912.700	0.68	2.90	2.76	73	83	69	102.5
A	8	70.00	917.500	0.57	2.40	2.32	72	84	70	102.2
	8	75.00	921.900	0.64	2.70	2.60	73	83	71	98.8
A	9	80.00	926.400	0.66	2.80	2.69	73	84	72	69.1
	9	85.00	929.600	0.66	2.80	2.69	73	84	72	144.6
A	10	90.00	936.300	0.68	2.90	2.78	74	87	74	95.4
	10	95.00	940.800	0.68	2.90	2.78	74	87	75	99.5
A	11	100.00	945.500	0.72	3.10	2.95	74	88	75	102.8
	11	105.00	950.500	0.76	3.30	3.12	73	88	76	103.9
A	12	110.00	955.700	0.75	3.20	3.07	75	88	76	102.8
	12	115.00	960.800	0.75	3.20	3.07	76	88	79	98.6

=========
RUN DATA
=========

PLANT- Precision Engineering
DATE- December 18,1991
LOCATION- Seattle, Washington
RUN- Outlet 2

POINT #		TIME	GAS METER READING	VELOCITY DELTA P	ORIFICE PRESSURE ACTUAL	ORIFICE PRESSURE DESIRED	STACK TEMP	DRY GAS METER TEMP. IN	DRY GAS METER TEMP. OUT	%I PER POINT
B	1	120.00	965.700	0.75	3.20	3.10	70	88	76	80.2
	1	125.00	969.700	0.75	3.20	3.07	70	78	77	91.0
B	2	130.00	974.200	1.10	4.70	4.49	70	78	73	82.5
	2	135.00	979.100	1.10	4.70	4.50	71	82	73	97.3
B	3	140.00	984.900	0.89	3.80	3.65	71	85	74	105.7
	3	145.00	990.600	0.92	4.00	3.76	74	87	74	80.4
B	4	150.00	995.000	0.79	3.40	3.23	73	85	74	108.4
	4	155.00	1000.500	0.81	3.50	3.31	73	85	75	105.0
B	5	160.00	1005.900	0.70	3.00	2.86	73	85	74	98.3
	5	165.00	1010.600	0.72	3.00	2.95	73	85	75	111.2
B	6	170.00	1016.000	0.67	2.90	2.74	74	85	75	85.5
	6	175.00	1020.000	0.67	2.90	2.74	74	86	76	100.2
B	7	180.00	1024.700	0.65	2.80	2.66	74	86	75	99.7
	7	185.00	1029.300	0.72	3.00	2.95	73	86	76	98.7
B	8	190.00	1034.100	0.72	3.00	2.95	74	86	76	96.7
	8	195.00	1038.800	0.68	2.90	2.78	74	86	76	101.6
B	9	200.00	1043.600	0.68	2.90	2.78	74	87	76	97.3
	9	205.00	1048.200	0.68	2.90	2.78	74	87	76	97.3
B	10	210.00	1052.800	0.80	3.40	3.27	74	86	76	115.3
	10	215.00	1058.700	0.80	3.40	3.29	72	87	77	85.7
B	11	220.00	1063.100	0.80	3.40	3.29	72	88	77	97.3
	11	225.00	1068.100	0.79	3.40	3.25	73	88	77	99.9
B	12	230.00	1073.200	0.79	3.40	3.26	72	88	78	97.8
	12	235.00	1078.200	0.79	3.40	3.25	72	86	77	105.0
	0	240.00	1083.555			0.00				0.0

=========
RUN DATA
=========

PLANT- Precision Engineering
DATE- December 19,1991
LOCATION- Seattle, Washington
RUN- Outlet 3

POINT #		TIME	GAS METER READING	VELOCITY DELTA P	ORIFICE PRESSURE ACTUAL	ORIFICE PRESSURE DESIRED	STACK TEMP	DRY GAS METER TEMP. IN	DRY GAS METER TEMP. OUT	%I PER POINT
A	1	0.00	83.680	0.83	3.56	3.19	70	43	43	102.3
	1	5.00	88.600	0.88	3.70	3.41	70	50	45	106.1
A	2	10.00	93.900	0.88	3.70	3.44	71	56	48	95.3
	2	15.00	98.700	0.89	3.80	3.49	71	60	48	100.4
A	3	20.00	103.800	0.85	3.65	3.35	71	64	50	102.1
	3	25.00	108.900	0.87	3.70	3.45	71	67	52	98.4
A	4	30.00	113.900	0.85	3.65	3.37	72	69	53	101.4
	4	35.00	119.000	0.85	3.65	3.39	72	71	55	103.0
A	5	40.00	124.200	0.84	3.61	3.36	72	72	57	103.3
	5	45.00	129.400	0.84	3.61	3.37	72	75	59	88.9
A	6	50.00	133.900	0.81	3.40	3.27	70	76	60	104.2
	6	55.00	139.100	0.84	3.61	3.40	70	77	62	100.1
A	7	60.00	144.200	0.76	3.27	3.08	71	78	64	96.8
	7	65.00	148.900	0.71	3.05	2.88	71	79	65	99.9
A	8	70.00	153.600	0.73	3.10	2.97	71	79	66	98.4
	8	75.00	158.300	0.73	3.10	2.97	71	80	67	108.7
A	9	80.00	163.500	0.74	3.20	3.01	72	80	68	91.4
	9	85.00	167.900	0.71	3.05	2.90	72	82	69	97.2
A	10	90.00	172.500	0.71	3.05	2.90	72	82	70	103.4
	10	95.00	177.400	0.71	3.05	2.90	72	83	71	94.8
A	11	100.00	181.900	0.71	3.05	2.90	72	83	71	113.8
	11	105.00	187.300	0.71	3.05	2.91	72	84	72	92.5
A	12	110.00	191.700	0.73	3.14	2.99	72	85	72	97.4
	12	115.00	196.400	0.73	3.14	3.00	72	85	73	101.5

=========
RUN DATA
=========

PLANT- Precision Engineering
DATE- December 19,1991
LOCATION- Seattle, Washington
RUN- Outlet 3

POINT #		TIME	GAS METER READING	VELOCITY DELTA P	ORIFICE PRESSURE ACTUAL	ORIFICE PRESSURE DESIRED	STACK TEMP	DRY GAS METER TEMP. IN	DRY GAS METER TEMP. OUT	%I PER POINT
B	1	120.00	201.300	1.00	4.30	4.07	72	75	73	102.1
	1	125.00	207.000	1.00	4.30	4.09	72	81	73	106.9
B	2	130.00	213.000	1.10	4.70	4.51	72	84	73	91.5
	2	135.00	218.400	1.10	4.70	4.52	72	86	74	104.8
B	3	140.00	224.600	0.92	3.95	3.78	72	86	74	95.9
	3	145.00	229.800	0.96	4.10	3.95	72	86	75	102.9
B	4	150.00	235.500	0.85	3.60	3.50	72	87	75	95.7
	4	155.00	240.500	0.85	3.60	3.50	72	87	75	95.7
B	5	160.00	245.500	0.84	3.60	3.46	72	87	76	119.3
	5	165.00	251.700	0.81	3.40	3.34	72	87	76	80.3
B	6	170.00	255.800	0.80	3.40	3.30	72	87	76	82.8
	6	175.00	260.000	0.80	3.40	3.30	72	87	76	118.2
B	7	180.00	266.000	0.80	3.40	3.30	72	87	76	88.7
	7	185.00	270.500	0.76	3.20	3.14	72	87	77	105.0
B	8	190.00	275.700	0.78	3.30	3.22	72	87	77	95.7
	8	195.00	280.500	0.82	3.50	3.38	72	87	77	101.1
B	9	200.00	285.700	0.82	3.50	3.38	72	87	77	91.4
	9	205.00	290.400	0.82	3.50	3.38	72	87	77	101.1
B	10	210.00	295.600	0.77	3.30	3.18	72	87	77	94.3
	10	215.00	300.300	0.77	3.30	3.18	72	87	77	112.3
B	11	220.00	305.900	0.76	3.26	3.13	72	86	77	93.0
	11	225.00	310.500	0.73	3.13	3.01	72	86	77	90.7
B	12	230.00	314.900	0.73	3.13	3.01	72	85	77	103.2
	12	235.00	319.900	0.74	3.18	3.05	72	85	76	102.4
	0	240.00	324.891			0.00				0.0

PLANT- Precision Engineering
DATE- December 17,1991
LOCATION-Seattle, Washington
RUN- Inlet 1-1 Total Cr

INITIAL DATA VALUES

DIA. OF STACK OR CROSS SECTION
24.0000 IN. OR 0.0000 L 0.0000 W IN.

CATCH

FRONT HALF	3029.0000 ug.
BACK HALF	0.0000 ug.
TOTAL	3029.0000 ug.

BAROMETRIC PRESSURE Pbar: 30.01 in. Hg
Ym METER CORRECTION FACTOR: 0.9780

STACK STATIC PRESSURE Pst: -5.40 in. HOH
NET TIME OF TEST Tt: 360 min.

ESTIMATED % MOISTURE: 1.0
PITOT COEFFICIENT: 0.84

DIA. OF NOZZLE: 0.2480 in.
Vw TOTAL H2O COLLECTED: 72.82 ml

METER DELTA H@: 1.8900 in. HOH
Np # OF POINTS: 72

%CO2	%O2	%N2
0.70	21.00	78.30

CALCULATED VALUES

Milligrams/Dry Std. Cubic Meter = 0.3081

Grains/Dry Std. Cubic Ft. = 1.35E-04

Lbs./Hour = 1.027E-02 Kilograms/Hour = 4.660E-03

AFCM: 9570.39
DSCFM: 8900.62

Vw gas: 3.4298 CF
Vm Std.: 347.1318 CF
STACK GAS PRESSURE Ps: 29.6129 in. HOH

TRUE % M: 0.9784
AVE. DELTA P: 0.7747 in. HOH
MWd MOL WT. OF STACK GAS: 28.9520

Md: 0.9900
AVE. DELTA H: 3.65 in. HOH
AVE. SQRT DELTA P: 20.6629

Bws(est): 0.0100
AVE. Ts: 96 F
PER CENT ISOKINETIC %I: 101.5190

Vm TOTAL: 350.6830 CF
AVE. Tm: 68 F
Vs STACK GAS VELOCITY: 50.7725 f/s

MW MOL. WT. OF STACK GAS WET= 28.8425

LEAK CHECK

GAS METER READING

	START	STOP
1	0.0000	0.0000
2	0.0000	0.0000
3	0.0000	0.0000
4	0.0000	0.0000
5	0.0000	0.0000

COMENTS

BF29 = # of Points Read in Spreadsheet
12 Traverse Points used at Inlet 1

PLANT- Precision Engineering
DATE- December 17,1991
LOCATION-Seattle, Washington
RUN- Inlet 1-1 Total Cr(VI)

INITIAL DATA VALUES

DIA. OF STACK OR CROSS SECTION
24.0000 IN. OR 0.0000 L 0.0000 W IN.

CATCH

FRONT HALF	2889.0000 ug.
BACK HALF	0.0000 ug.
TOTAL	2889.0000 ug.

BAROMETRIC PRESSURE Pbar	Ym METER CORRECTION FACTOR
30.01 in. Hg	0.9780
STACK STATIC PRESSURE Pst	NET TIME OF TEST Tt
-5.40 in. HOH	360 min.
ESTIMATED % MOISTURE	PITOT COEFFICIENT
1.0	0.84
DIA. OF NOZZLE	Vw TOTAL H2O COLLECTED
0.2480 in.	72.82 ml
METER DELTA H@	Np # OF POINTS
1.8900 in. HOH	72

%CO2	%O2	%N2
0.70	21.00	78.30

CALCULATED VALUES

Milligrams/Dry Std. Cubic Meter = 0.2939

Grains/Dry Std. Cubic Ft. = 1.28E-04

Lbs./Hour = 9.799E-03 Kilograms/Hour = 4.445E-03

AFCM	DSCFM
9570.39	8901.44

Vw gas	Vm Std.	STACK GAS PRESSURE Ps
3.4298 CF	347.1318 CF	29.6129 in. HOH
TRUE % M	AVE. DELTA P	MWd MOL WT. OF STACK GAS
0.9784	0.7747 in. HOH	28.9520
Md	AVE. DELTA H	AVE. SQRT DELTA P
0.9900	3.65 in. HOH	20.6629
Bws(est)	AVE. Ts	PER CENT ISOKINETIC %I
0.0100	96 F	101.5095
Vm TOTAL	AVE. Tm	Vs STACK GAS VELOCITY
350.6830 CF	68 F	50.7725 f/s

MW MOL. WT. OF STACK GAS WET= 28.8425

LEAK CHECK

GAS METER READING

	START	STOP	COMENTS
1	0.0000	0.0000	BF29 = # of Points Read in Spreadsheet
2	0.0000	0.0000	12 Traverse Points used at Inlet 1
3	0.0000	0.0000	
4	0.0000	0.0000	
5	0.0000	0.0000	

PLANT- Precision Engineering
DATE- December 17,1991
LOCATION-Seattle, Washington
RUN- Inlet 1-2 Total Cr

INITIAL DATA VALUES

DIA. OF STACK OR CROSS SECTION
24.0000 IN. OR 0.0000 L 0.0000 W IN.

CATCH

FRONT HALF	1834.0000 ug.
BACK HALF	0.0000 ug.
TOTAL	1834.0000 ug.

BAROMETRIC PRESSURE Pbar	Ym METER CORRECTION FACTOR
29.69 in. Hg	0.9780
STACK STATIC PRESSURE Pst	NET TIME OF TEST Tt
-6.00 in. HOH	240 min.
ESTIMATED % MOISTURE	PITOT COEFFICIENT
1.1	0.84
DIA. OF NOZZLE	Vw TOTAL H2O COLLECTED
0.2480 in.	54.70 ml
METER DELTA H@	Np # OF POINTS
1.8900 in. HOH	48

%CO2	%O2	%N2
0.70	21.00	78.30

CALCULATED VALUES

Milligrams/Dry Std. Cubic Meter = 0.2893

Grains/Dry Std. Cubic Ft. = 1.26E-04

Lbs./Hour = 9.568E-03 Kilograms/Hour = 4.340E-03

AFCM	DSCFM
9148.13	8830.28

Vw gas	Vm Std.	STACK GAS PRESSURE Ps
2.5764 CF	223.8736 CF	29.2488 in. HOH
TRUE % M	AVE. DELTA P	MWd MOL WT. OF STACK GAS
1.1377	0.7433 in. HOH	28.9520
Md	AVE. DELTA H	AVE. SQRT DELTA P
0.9890	3.20 in. HOH	19.6257
Bws(est)	AVE. Ts	PER CENT ISOKINETIC %I
0.0110	69 F	98.9903
Vm TOTAL	AVE. Tm	Vs STACK GAS VELOCITY
229.8840 CF	70 F	48.5323 f/s

MW MOL. WT. OF STACK GAS WET= 28.8315

LEAK CHECK

GAS METER READING

	START	STOP	COMENTS
1	0.0000	0.0000	BF29 = # of Points Read in Spreadsheet
2	0.0000	0.0000	12 Traverse Points used at Inlet 1
3	0.0000	0.0000	
4	0.0000	0.0000	
5	0.0000	0.0000	

PLANT- Precision Engineering
DATE- December 18,1991
LOCATION-Seattle, Washington
RUN- Inlet 1-2 Total Cr(VI)

INITIAL DATA VALUES

DIA. OF STACK OR CROSS SECTION
24.0000 IN. OR 0.0000 L 0.0000 W IN.

CATCH

FRONT HALF	1774.0000 ug.
BACK HALF	0.0000 ug.
TOTAL	1774.0000 ug.

BAROMETRIC PRESSURE Pbar	Ym METER CORRECTION FACTOR
29.69 in. Hg	0.9780
STACK STATIC PRESSURE Pst	NET TIME OF TEST Tt
-6.00 in. HOH	240 min.
ESTIMATED % MOISTURE	PITOT COEFFICIENT
1.1	0.84
DIA. OF NOZZLE	Vw TOTAL H2O COLLECTED
0.2480 in.	54.70 ml
METER DELTA H@	Np # OF POINTS
1.8900 in. HOH	48

%CO2	%O2	%N2
0.70	21.00	78.30

CALCULATED VALUES

Milligrams/Dry Std. Cubic Meter = 0.2798

Grains/Dry Std. Cubic Ft. = 1.22E-04

Lbs./Hour = 9.255E-03 Kilograms/Hour = 4.198E-03

AFCM	DSCFM
9148.13	8830.28

Vw gas	Vm Std.	STACK GAS PRESSURE Ps
2.5764 CF	223.8736 CF	29.2488 in. HOH
TRUE % M	AVE. DELTA P	MWd MOL WT. OF STACK GAS
1.1377	0.7433 in. HOH	28.9520
Md	AVE. DELTA H	AVE. SQRT DELTA P
0.9890	3.20 in. HOH	19.6257
Bws(est)	AVE. Ts	PER CENT ISOKINETIC %I
0.0110	69 F	98.9903
Vm TOTAL	AVE. Tm	Vs STACK GAS VELOCITY
229.8840 CF	70 F	48.5323 f/s

MW MOL. WT. OF STACK GAS WET= 28.8315

LEAK CHECK

GAS METER READING

	START	STOP	COMENTS
1	0.0000	0.0000	BF29 = # of Points Read in Spreadsheet
2	0.0000	0.0000	12 Traverse Points used at Inlet 1
3	0.0000	0.0000	
4	0.0000	0.0000	
5	0.0000	0.0000	

PLANT- Precision Engineering
DATE- December 17,1991
LOCATION-Seattle, Washington
RUN- Inlet 1-3 Total Cr

INITIAL DATA VALUES

DIA. OF STACK OR CROSS SECTION
24.0000 IN. OR 0.0000 L 0.0000 W IN.

CATCH

FRONT HALF	2988.0000 ug.
BACK HALF	0.0000 ug.
TOTAL	2988.0000 ug.

BAROMETRIC PRESSURE Pbar: 30.46 in. Hg
Ym METER CORRECTION FACTOR: 0.9780

STACK STATIC PRESSURE Pst: -5.70 in. HOH
NET TIME OF TEST Tt: 240 min.

ESTIMATED % MOISTURE: 1.2
PITOT COEFFICIENT: 0.84

DIA. OF NOZZLE: 0.2480 in.
Vw TOTAL H2O COLLECTED: 60.95 ml

METER DELTA H@: 1.8900 in. HOH
Np # OF POINTS: 48

%CO2	%O2	%N2
0.70	21.00	78.30

CALCULATED VALUES

Milligrams/Dry Std. Cubic Meter = 0.4500

Grains/Dry Std. Cubic Ft. = 1.97E-04

Lbs./Hour = 1.654E-02 Kilograms/Hour = 7.501E-03

AFCM: 9926.68
DSCFM: 9810.05

Vw gas: 2.8707 CF
Vm Std.: 234.4752 CF
STACK GAS PRESSURE Ps: 30.0409 in. HOH

TRUE % M: 1.2095
AVE. DELTA P: 0.8802 in. HOH
MWd MOL WT. OF STACK GAS: 28.9520

Md: 0.9880
AVE. DELTA H: 3.75 in. HOH
AVE. SQRT DELTA P: 21.5782

Bws(est): 0.0120
AVE. Ts: 70 F
PER CENT ISOKINETIC %I: 93.3233

Vm TOTAL: 233.5970 CF
AVE. Tm: 68 F
Vs STACK GAS VELOCITY: 52.6627 f/s

MW MOL. WT. OF STACK GAS WET= 28.8206

LEAK CHECK

GAS METER READING

	START	STOP	COMENTS
1	0.0000	0.0000	BF29 = # of Points in Spreadsheet
2	0.0000	0.0000	12 Traverse Points used at Inlet 1
3	0.0000	0.0000	
4	0.0000	0.0000	
5	0.0000	0.0000	

PLANT- Precision Engineering
DATE- December 19,1991
LOCATION-Seattle, Washington
RUN- Inlet 1-3 Total Cr(VI)

INITIAL DATA VALUES

DIA. OF STACK OR CROSS SECTION
24.0000 IN. OR 0.0000 L 0.0000 W IN.

CATCH
FRONT HALF 2891.0000 ug.
BACK HALF 0.0000 ug.
TOTAL 2891.0000 ug.

BAROMETRIC PRESSURE Pbar: 30.46 in. Hg
Ym METER CORRECTION FACTOR: 0.9780

STACK STATIC PRESSURE Pst: -5.70 in. HOH
NET TIME OF TEST Tt: 240 min.

ESTIMATED % MOISTURE: 1.2
PITOT COEFFICIENT: 0.84

DIA. OF NOZZLE: 0.2480 in.
Vw TOTAL H2O COLLECTED: 60.95 ml

METER DELTA H@: 1.8900 in. HOH
Np # OF POINTS: 48

%CO2: 0.70
%O2: 21.00
%N2: 78.30

CALCULATED VALUES

Milligrams/Dry Std. Cubic Meter = 0.4354

Grains/Dry Std. Cubic Ft. = 1.90E-04

Lbs./Hour = 1.600E-02
Kilograms/Hour = 7.257E-03

AFCM: 9926.68
DSCFM: 9810.05

Vw gas: 2.8707 CF
Vm Std.: 234.4752 CF
STACK GAS PRESSURE Ps: 30.0409 in. HOH

TRUE % M: 1.2095
AVE. DELTA P: 0.8802 in. HOH
MWd MOL WT. OF STACK GAS: 28.9520

Md: 0.9880
AVE. DELTA H: 3.75 in. HOH
AVE. SQRT DELTA P: 21.5782

Bws(est): 0.0120
AVE. Ts: 70 F
PER CENT ISOKINETIC %I: 93.3233

Vm TOTAL: 233.5970 CF
AVE. Tm: 68 F
Vs STACK GAS VELOCITY: 52.6627 f/s

MW MOL. WT. OF STACK GAS WET= 28.8206

LEAK CHECK

GAS METER READING

	START	STOP	COMENTS
1	0.0000	0.0000	BF29 = # of Points in Spreadsheet
2	0.0000	0.0000	12 Traverse Points used at Inlet 1
3	0.0000	0.0000	
4	0.0000	0.0000	
5	0.0000	0.0000	

PLANT- Precicion Engineering
DATE- December 18,1991
LOCATION-Seattle, Washington
RUN- Inlet 2-1 Total Cr

INITIAL DATA VALUES

DIA. OF STACK OR CROSS SECTION
18.0000 IN. OR 0.0000 L 0.0000 W IN.

CATCH
FRONT HALF 1573.0000 ug.
BACK HALF 0.0000 ug.
TOTAL 1573.0000 ug.

BAROMETRIC PRESSURE Pbar: 30.01 in. Hg
Ym METER CORRECTION FACTOR: 0.9790

STACK STATIC PRESSURE Pst: -5.70 in. HOH
NET TIME OF TEST Tt: 360 min.

ESTIMATED % MOISTURE: 0.7
PITOT COEFFICIENT: 0.84

DIA. OF NOZZLE: 0.2490 in.
Vw TOTAL H2O COLLECTED: 53.03 ml

METER DELTA H@: 1.9470 in. HOH
Np # OF POINTS: 72

%CO2: 0.70
%O2: 21.00
%N2: 78.30

CALCULATED VALUES

Milligrams/Dry Std. Cubic Meter = 0.1511

Grains/Dry Std. Cubic Ft. = 6.60E-05

Lbs./Hour = 2.933E-03
Kilograms/Hour = 1.331E-03

AFCM: 5528.38
DSCFM: 5183.08

Vw gas: 2.4977 CF
Vm Std.: 367.6283 CF
STACK GAS PRESSURE Ps: 29.5909 in. HOH

TRUE % M: 0.6748
AVE. DELTA P: 0.8414 in. HOH
MWd MOL WT. OF STACK GAS: 28.9520

Md: 0.9930
AVE. DELTA H: 3.98 in. HOH
AVE. SQRT DELTA P: 21.2238

Bws(est): 0.0070
AVE. Ts: 93 F
PER CENT ISOKINETIC %I: 103.0199

Vm TOTAL: 369.6190 CF
AVE. Tm: 66 F
Vs STACK GAS VELOCITY: 52.1404 f/s

MW MOL. WT. OF STACK GAS WET= 28.8753

LEAK CHECK

GAS METER READING

	START	STOP	COMENTS
1	0.0000	0.0000	BF29 = # of Points Read in Spreadsheet
2	0.0000	0.0000	12 Traverse Points at Inlet 2
3	0.0000	0.0000	
4	0.0000	0.0000	
5	0.0000	0.0000	

PLANT- Precicion Engineering
DATE- December 17,1991
LOCATION-Seattle, Washington
RUN- Inlet 2-1 Total Cr(VI)

INITIAL DATA VALUES

DIA. OF STACK OR CROSS SECTION
18.0000 IN. OR 0.0000 L 0.0000 W IN.

CATCH
FRONT HALF 1589.0000 ug.
BACK HALF 0.0000 ug.
TOTAL 1589.0000 ug.

BAROMETRIC PRESSURE Pbar: 30.01 in. Hg
Ym METER CORRECTION FACTOR: 0.9790

STACK STATIC PRESSURE Pst: -5.70 in. HOH
NET TIME OF TEST Tt: 360 min.

ESTIMATED % MOISTURE: 0.7
PITOT COEFFICIENT: 0.84

DIA. OF NOZZLE: 0.2490 in.
Vw TOTAL H2O COLLECTED: 53.03 ml

METER DELTA H@: 1.9470 in. HOH
Np # OF POINTS: 72

%CO2: 0.70
%O2: 21.00
%N2: 78.30

CALCULATED VALUES

Milligrams/Dry Std. Cubic Meter = 0.1526

Grains/Dry Std. Cubic Ft. = 6.67E-05

Lbs./Hour = 2.963E-03
Kilograms/Hour = 1.344E-03

AFCM: 5528.38
DSCFM: 5183.08

Vw gas: 2.4977 CF
Vm Std.: 367.6283 CF
STACK GAS PRESSURE Ps: 29.5909 in. HOH

TRUE % M: 0.6748
AVE. DELTA P: 0.8414 in. HOH
MWd MOL WT. OF STACK GAS: 28.9520

Md: 0.9930
AVE. DELTA H: 3.98 in. HOH
AVE. SQRT DELTA P: 21.2238

Bws(est): 0.0070
AVE. Ts: 93 F
PER CENT ISOKINETIC %I: 103.0199

Vm TOTAL: 369.6190 CF
AVE. Tm: 66 F
Vs STACK GAS VELOCITY: 52.1404 f/s

MW MOL. WT. OF STACK GAS WET= 28.8753

LEAK CHECK

GAS METER READING

	START	STOP	COMENTS
1	0.0000	0.0000	BF29 = # of Points Read in Spreadsheet
2	0.0000	0.0000	12 Traverse Points at Inlet 2
3	0.0000	0.0000	
4	0.0000	0.0000	
5	0.0000	0.0000	

PLANT- Precision Engineering
DATE- December 18,1991
LOCATION-Seattle, Washington
RUN- Inlet 2-2 Total Cr

INITIAL DATA VALUES

DIA. OF STACK OR CROSS SECTION
18.0000 IN. OR 0.0000 L 0.0000 W IN.

CATCH

FRONT HALF	894.0000 ug.
BACK HALF	0.0000 ug.
TOTAL	894.0000 ug.

BAROMETRIC PRESSURE Pbar: 29.69 in. Hg
Ym METER CORRECTION FACTOR: 0.9790

STACK STATIC PRESSURE Pst: -5.50 in. HOH
NET TIME OF TEST Tt: 240 min.

ESTIMATED % MOISTURE: 0.6
PITOT COEFFICIENT: 0.84

DIA. OF NOZZLE: 0.2490 in.
Vw TOTAL H2O COLLECTED: 30.30 ml

METER DELTA H@: 1.9470 in. HOH
Np # OF POINTS: 48

%CO2: 0.70
%O2: 21.00
%N2: 78.30

CALCULATED VALUES

Milligrams/Dry Std. Cubic Meter = 0.1448

Grains/Dry Std. Cubic Ft. = 6.33E-05

Lbs./Hour = 2.901E-03
Kilograms/Hour = 1.316E-03

AFCM: 5516.07
DSCFM: 5350.26

Vw gas: 1.4271 CF
Vm Std.: 218.0996 CF
STACK GAS PRESSURE Ps: 29.2856 in. HOH

TRUE % M: 0.6501
AVE. DELTA P: 0.8702 in. HOH
MWd MOL WT. OF STACK GAS: 28.9520

Md: 0.9940
AVE. DELTA H: 3.74 in. HOH
AVE. SQRT DELTA P: 21.0710

Bws(est): 0.0060
AVE. Ts: 70 F
PER CENT ISOKINETIC %I: 88.8119

Vm TOTAL: 224.4910 CF
AVE. Tm: 73 F
Vs STACK GAS VELOCITY: 52.0243 f/s

MW MOL. WT. OF STACK GAS WET= 28.8863

LEAK CHECK

GAS METER READING

	START	STOP	COMENTS
1	0.0000	0.0000	BF29 = # ofPoints in Spreadsheet
2	0.0000	0.0000	12 Traverse Points used at Inlet 2
3	0.0000	0.0000	
4	0.0000	0.0000	
5	0.0000	0.0000	

INITIAL DATA VALUES		CALCULATED VALUES
	PLANT- Precision Engineering	
	DATE- December 18,1991	
	LOCATION-Seattle, Washington	
	RUN- Inlet 2-2 Total Cr(VI)	

DIA. OF STACK OR CROSS SECTION
18.0000 IN. OR 0.0000 L 0.0000 W IN.

CATCH
FRONT HALF 770.0000 ug.
BACK HALF 0.0000 ug.
TOTAL 770.0000 ug.

BAROMETRIC PRESSURE Pbar: 29.69 in. Hg
Ym METER CORRECTION FACTOR: 0.9790

STACK STATIC PRESSURE Pst: -5.50 in. HOH
NET TIME OF TEST Tt: 240 min.

ESTIMATED % MOISTURE: 0.6
PITOT COEFFICIENT: 0.84

DIA. OF NOZZLE: 0.2490 in.
Vw TOTAL H2O COLLECTED: 30.30 ml

METER DELTA H@: 1.9470 in. HOH
Np # OF POINTS: 48

%CO2: 0.70
%O2: 21.00
%N2: 78.30

Milligrams/Dry Std. Cubic Meter = 0.1247

Grains/Dry Std. Cubic Ft. = 5.45E-05

Lbs./Hour = 2.499E-03
Kilograms/Hour = 1.133E-03

AFCM: 5516.07
DSCFM: 5350.26

Vw gas: 1.4271 CF
Vm Std.: 218.0996 CF
STACK GAS PRESSURE Ps: 29.2856 in. HOH

TRUE % M: 0.6501
AVE. DELTA P: 0.8702 in. HOH
MWd MOL WT. OF STACK GAS: 28.9520

Md: 0.9940
AVE. DELTA H: 3.74 in. HOH
AVE. SQRT DELTA P: 21.0710

Bws(est): 0.0060
AVE. Ts: 70 F
PER CENT ISOKINETIC %I: 88.8119

Vm TOTAL: 224.4910 CF
AVE. Tm: 73 F
Vs STACK GAS VELOCITY: 52.0243 f/s

MW MOL. WT. OF STACK GAS WET= 28.8863

LEAK CHECK

GAS METER READING

	START	STOP	COMENTS
1	0.0000	0.0000	BF29 = # of Points Read in Spreadsheet
2	0.0000	0.0000	12 Traverse Points used at Inlet 2
3	0.0000	0.0000	
4	0.0000	0.0000	
5	0.0000	0.0000	

PLANT- Precision Engineering
DATE- December 19,1991
LOCATION-Seattle, Washington
RUN- Inlet 2-3 Total Cr

INITIAL DATA VALUES

DIA. OF STACK OR CROSS SECTION
18.0000 IN. OR 0.0000 L 0.0000 W IN.

CATCH
FRONT HALF 933.0000 ug.
BACK HALF 0.0000 ug.
TOTAL 933.0000 ug.

BAROMETRIC PRESSURE Pbar: 30.46 in. Hg
Ym METER CORRECTION FACTOR: 0.9790

STACK STATIC PRESSURE Pst: -5.70 in. HOH
NET TIME OF TEST Tt: 240 min.

ESTIMATED % MOISTURE: 0.9
PITOT COEFFICIENT: 0.84

DIA. OF NOZZLE: 0.2490 in.
Vw TOTAL H2O COLLECTED: 44.85 ml

METER DELTA H@: 1.9470 in. HOH
Np # OF POINTS: 48

%CO2: 0.70
%O2: 21.00
%N2: 78.30

CALCULATED VALUES

Milligrams/Dry Std. Cubic Meter = 0.1476

Grains/Dry Std. Cubic Ft. = 6.45E-05

Lbs./Hour = 2.733E-03
Kilograms/Hour = 1.240E-03

AFCM: 4967.65
DSCFM: 4942.64

Vw gas: 2.1124 CF
Vm Std.: 223.1684 CF
STACK GAS PRESSURE Ps: 30.0409 in. HOH

TRUE % M: 0.9377
AVE. DELTA P: 0.7344 in. HOH
MWd MOL WT. OF STACK GAS: 28.9520

Md: 0.9910
AVE. DELTA H: 3.15 in. HOH
AVE. SQRT DELTA P: 19.2082

Bws(est): 0.0090
AVE. Ts: 68 F
PER CENT ISOKINETIC %I: 98.3705

Vm TOTAL: 221.5950 CF
AVE. Tm: 67 F
Vs STACK GAS VELOCITY: 46.8519 f/s

MW MOL. WT. OF STACK GAS WET= 28.8534

LEAK CHECK

GAS METER READING

	START	STOP	COMENTS
1	0.0000	0.0000	BF29 = # of Points Read in Spreadsheet
2	0.0000	0.0000	12 Traverse Points used at Inlet 2
3	0.0000	0.0000	
4	0.0000	0.0000	
5	0.0000	0.0000	

PLANT- Precision Engineering
DATE- December 19,1991
LOCATION-Seattle, Washington
RUN- Inlet 2-3 Total Cr(VI)

INITIAL DATA VALUES

DIA. OF STACK OR CROSS SECTION
18.0000 IN. OR 0.0000 L 0.0000 W IN.

CATCH

FRONT HALF	813.0000 ug.
BACK HALF	0.0000 ug.
TOTAL	813.0000 ug.

BAROMETRIC PRESSURE Pbar: 30.46 in. Hg
Ym METER CORRECTION FACTOR: 0.9790

STACK STATIC PRESSURE Pst: -5.70 in. HOH
NET TIME OF TEST Tt: 240 min.

ESTIMATED % MOISTURE: 0.9
PITOT COEFFICIENT: 0.84

DIA. OF NOZZLE: 0.2490 in.
Vw TOTAL H2O COLLECTED: 44.85 ml

METER DELTA H@: 1.9470 in. HOH
Np # OF POINTS: 48

%CO2	%O2	%N2
0.70	21.00	78.30

CALCULATED VALUES

Milligrams/Dry Std. Cubic Meter = 0.1286

Grains/Dry Std. Cubic Ft. = 5.62E-05

Lbs./Hour = 2.382E-03 Kilograms/Hour = 1.080E-03

AFCM: 4967.65
DSCFM: 4942.64

Vw gas: 2.1124 CF
Vm Std.: 223.1684 CF
STACK GAS PRESSURE Ps: 30.0409 in. HOH

TRUE % M: 0.9377
AVE. DELTA P: 0.7344 in. HOH
MWd MOL WT. OF STACK GAS: 28.9520

Md: 0.9910
AVE. DELTA H: 3.15 in. HOH
AVE. SQRT DELTA P: 19.2082

Bws(est): 0.0090
AVE. Ts: 68 F
PER CENT ISOKINETIC %I: 98.3705

Vm TOTAL: 221.5950 CF
AVE. Tm: 67 F
Vs STACK GAS VELOCITY: 46.8519 f/s

MW MOL. WT. OF STACK GAS WET= 28.8534

LEAK CHECK

GAS METER READING

	START	STOP	COMENTS
1	0.0000	0.0000	BF29 = # of Points in Spreadsheet
2	0.0000	0.0000	12 Traverse Points used at INLET 2
3	0.0000	0.0000	
4	0.0000	0.0000	
5	0.0000	0.0000	

PLANT- Precision Engineering
DATE- December 17,1991
LOCATION-Seattle, Washington
RUN- Outlet 1 Total Cr

INITIAL DATA VALUES

DIA. OF STACK OR CROSS SECTION
30.0000 IN. OR 0.0000 L 0.0000 W IN.

CATCH

FRONT HALF	137.0000 ug.
BACK HALF	0.0000 ug.
TOTAL	137.0000 ug.

BAROMETRIC PRESSURE Pbar: 30.01 in. Hg
Ym METER CORRECTION FACTOR: 0.9910

STACK STATIC PRESSURE Pst: 0.20 in. HOH
NET TIME OF TEST Tt: 360 min.

ESTIMATED % MOISTURE: 1.0
PITOT COEFFICIENT: 0.84

DIA. OF NOZZLE: 0.2480 in.
Vw TOTAL H2O COLLECTED: 77.00 ml

METER DELTA H@: 1.8260 in. HOH
Np # OF POINTS: 72

%CO2	%O2	%N2
0.70	21.00	78.30

CALCULATED VALUES

Milligrams/Dry Std. Cubic Meter = 0.0131

Grains/Dry Std. Cubic Ft. = 5.71E-06

Lbs./Hour = 6.747E-04
Kilograms/Hour = 3.060E-04

AFCM: 14985.56
DSCFM: 13776.23

Vw gas: 3.6267 CF
Vm Std.: 370.0069 CF
STACK GAS PRESSURE Ps: 30.0247 in. HOH

TRUE % M: 0.9707
AVE. DELTA P: 0.7671 in. HOH
MWd MOL WT. OF STACK GAS: 28.9520

Md: 0.9900
AVE. DELTA H: 3.63 in. HOH
AVE. SQRT DELTA P: 20.8503

Bws(est): 0.0100
AVE. Ts: 111 F
PER CENT ISOKINETIC %I: 109.2376

Vm TOTAL: 373.8870 CF
AVE. Tm: 75 F
Vs STACK GAS VELOCITY: 50.8805 f/s

MW MOL. WT. OF STACK GAS WET= 28.8425

LEAK CHECK

GAS METER READING

	START	STOP	COMENTS
1	0.0000	0.0000	BF29 = # of Points Read in Spreadsheet
2	0.0000	0.0000	24 Traverse Points used at Outlet 1
3	0.0000	0.0000	
4	0.0000	0.0000	
5	0.0000	0.0000	

PLANT- Precision Engineering
DATE- December 17, 1991
LOCATION- Seattle, Washington
RUN- Outlet 1 Total Cr(VI)

DIA. OF STACK OR CROSS SECTION
30.0000 IN. OR 0.0000 L 0.0000 W IN.

CATCH

FRONT HALF	146.0000 ug.
BACK HALF	0.0000 ug.
TOTAL	146.0000 ug.

BAROMETRIC PRESSURE Pbar: 30.01 in. Hg
Ym METER CORRECTION FACTOR: 0.9910

STACK STATIC PRESSURE Pst: 0.20 in. HOH
NET TIME OF TEST Tt: 360 min.

ESTIMATED % MOISTURE: 1.0
PITOT COEFFICIENT: 0.84

DIA. OF NOZZLE: 0.2480 in.
Vw TOTAL H2O COLLECTED: 77.00 ml

METER DELTA H@: 1.8260 in. HOH
Np # OF POINTS: 72

%CO2: 0.70
%O2: 21.00
%N2: 78.30

Milligrams/Dry Std. Cubic Meter = 0.0139

Grains/Dry Std. Cubic Ft. = 6.09E-06

Lbs./Hour = 7.190E-04
Kilograms/Hour = 3.261E-04

AFCM: 14985.56
DSCFM: 13776.23

Vw gas: 3.6267 CF
Vm Std.: 370.0069 CF
STACK GAS PRESSURE Ps: 30.0247 in. HOH

TRUE % M: 0.9707
AVE. DELTA P: 0.7671 in. HOH
MWd MOL WT. OF STACK GAS: 28.9520

Md: 0.9900
AVE. DELTA H: 3.63 in. HOH
AVE. SQRT DELTA P: 20.8503

Bws(est): 0.0100
AVE. Ts: 111 F
PER CENT ISOKINETIC %I: 109.2376

Vm TOTAL: 373.8870 CF
AVE. Tm: 75 F
Vs STACK GAS VELOCITY: 50.8805 f/s

MW MOL. WT. OF STACK GAS WET= 28.8425

LEAK CHECK

GAS METER READING

	START	STOP	COMENTS
1	0.0000	0.0000	BF29 = # of Points Read in Spreadsheet
2	0.0000	0.0000	24 Traverse Points used at Outlet 1
3	0.0000	0.0000	
4	0.0000	0.0000	
5	0.0000	0.0000	

PLANT- Precision Engineering
DATE- December 18,1991
LOCATION-Seattle, Washington
RUN- Outlet 2 Total Cr

INITIAL DATA VALUES

DIA. OF STACK OR CROSS SECTION
30.0000 IN. OR 0.0000 L 0.0000 W IN.

CATCH

FRONT HALF	68.3000 ug.
BACK HALF	0.0000 ug.
TOTAL	68.3000 ug.

BAROMETRIC PRESSURE Pbar: 29.69 in. Hg
Ym METER CORRECTION FACTOR: 0.9910

STACK STATIC PRESSURE Pst: 0.20 in. HOH
NET TIME OF TEST Tt: 240 min.

ESTIMATED % MOISTURE: 1.1
PITOT COEFFICIENT: 0.84

DIA. OF NOZZLE: 0.2480 in.
Vw TOTAL H2O COLLECTED: 53.50 ml

METER DELTA H@: 1.8260 in. HOH
Np # OF POINTS: 48

%CO2	%O2	%N2
0.70	21.00	78.30

CALCULATED VALUES

Milligrams/Dry Std. Cubic Meter = 0.0105

Grains/Dry Std. Cubic Ft. = 4.59E-06

Lbs./Hour = 5.530E-04 Kilograms/Hour = 2.508E-04

AFCM	DSCFM
14442.13	14064.53

Vw gas	Vm Std.	STACK GAS PRESSURE Ps
2.5199 CF	229.7886 CF	29.7047 in. HOH

TRUE % M	AVE. DELTA P	MWd MOL WT. OF STACK GAS
1.0847	0.7531 in. HOH	28.9520

Md	AVE. DELTA H	AVE. SQRT DELTA P
0.9890	3.22 in. HOH	19.9831

Bws(est)	AVE. Ts	PER CENT ISOKINETIC %I
0.0110	72 F	99.6753

Vm TOTAL	AVE. Tm	Vs STACK GAS VELOCITY
235.4870 CF	76 F	49.0354 f/s

MW MOL. WT. OF STACK GAS WET= 28.8315

LEAK CHECK

GAS METER READING

	START	STOP	COMENTS
1	0.0000	0.0000	BF29 = # of Points Read in Spreadsheet
2	0.0000	0.0000	24 Traverse Points used at Outlet 2
3	0.0000	0.0000	
4	0.0000	0.0000	
5	0.0000	0.0000	

PLANT- Precision Engineering
DATE- December 18,1991
LOCATION-Seattle, Washington
RUN- Outlet 2 Total Cr(VI)

INITIAL DATA VALUES

DIA. OF STACK OR CROSS SECTION
30.0000 IN. OR 0.0000 L 0.0000 W IN.

CATCH

FRONT HALF	60.6000 ug.
BACK HALF	0.0000 ug.
TOTAL	60.6000 ug.

BAROMETRIC PRESSURE Pbar: 29.69 in. Hg
Ym METER CORRECTION FACTOR: 0.9910
STACK STATIC PRESSURE Pst: 0.20 in. HOH
NET TIME OF TEST Tt: 240 min.
ESTIMATED % MOISTURE: 1.1
PITOT COEFFICIENT: 0.84
DIA. OF NOZZLE: 0.2480 in.
Vw TOTAL H2O COLLECTED: 53.50 ml
METER DELTA H@: 1.8260 in. HOH
Np # OF POINTS: 48

%CO2	%O2	%N2
0.70	21.00	78.30

CALCULATED VALUES

Milligrams/Dry Std. Cubic Meter = 0.0093
Grains/Dry Std. Cubic Ft. = 4.07E-06
Lbs./Hour = 4.906E-04
Kilograms/Hour = 2.225E-04

AFCM	DSCFM
14442.13	14064.53

Vw gas	Vm Std.	STACK GAS PRESSURE Ps
2.5199 CF	229.7886 CF	29.7047 in. HOH

TRUE % M	AVE. DELTA P	MWd MOL WT. OF STACK GAS
1.0847	0.7531 in. HOH	28.9520

Md	AVE. DELTA H	AVE. SQRT DELTA P
0.9890	3.22 in. HOH	19.9831

Bws(est)	AVE. Ts	PER CENT ISOKINETIC %I
0.0110	72 F	99.6753

Vm TOTAL	AVE. Tm	Vs STACK GAS VELOCITY
235.4870 CF	76 F	49.0354 f/s

MW MOL. WT. OF STACK GAS WET= 28.8315

LEAK CHECK

GAS METER READING

	START	STOP	COMENTS
1	0.0000	0.0000	BF29 = # of Points Read in Spreadsheet
2	0.0000	0.0000	24 Traverse Points used at Outlet 2
3	0.0000	0.0000	
4	0.0000	0.0000	
5	0.0000	0.0000	

INITIAL DATA VALUES		CALCULATED VALUES
	PLANT- Precision Engineering	
	DATE- December 19,1991	
	LOCATION-Seattle, Washington	
	RUN- Outlet 3 Total Cr	

DIA. OF STACK OR CROSS SECTION
30.0000 IN. OR 0.0000 L 0.0000 W IN.

CATCH

FRONT HALF	61.3000 ug.
BACK HALF	0.0000 ug.
TOTAL	61.3000 ug.

BAROMETRIC PRESSURE Pbar	30.46 in. Hg
Ym METER CORRECTION FACTOR	0.9910
STACK STATIC PRESSURE Pst	0.20 in. HOH
NET TIME OF TEST Tt	240 min.
ESTIMATED % MOISTURE	0.9
PITOT COEFFICIENT	0.84
DIA. OF NOZZLE	0.2480 in.
Vw TOTAL H2O COLLECTED	46.85 ml
METER DELTA H@	1.8260 in. HOH
Np # OF POINTS	48

%CO2	%O2	%N2
0.70	21.00	78.30

Milligrams/Dry Std. Cubic Meter =	0.0089	
Grains/Dry Std. Cubic Ft. =	3.90E-06	
Lbs./Hour = 4.972E-04	Kilograms/Hour = 2.255E-04	
AFCM 14846.68	DSCFM 14882.64	
Vw gas 2.2066 CF	Vm Std. 242.6857 CF	STACK GAS PRESSURE Ps 30.4747 in. HOH
TRUE % M 0.9011	AVE. DELTA P 0.8175 in. HOH	MWd MOL WT. OF STACK GAS 28.9520
Md 0.9910	AVE. DELTA H 3.49 in. HOH	AVE. SQRT DELTA P 20.8153
Bws(est) 0.0090	AVE. Ts 72 F	PER CENT ISOKINETIC %I 99.4829
Vm TOTAL 241.2110 CF	AVE. Tm 74 F	Vs STACK GAS VELOCITY 50.4090 f/s
MW MOL. WT. OF STACK GAS WET=	28.8534	

LEAK CHECK

GAS METER READING

	START	STOP	COMENTS
1	0.0000	0.0000	BF29 = # of Points Read Spreadsheet
2	0.0000	0.0000	24 Traverse Points used at Outlet 3
3	0.0000	0.0000	
4	0.0000	0.0000	
5	0.0000	0.0000	

INITIAL DATA VALUES		CALCULATED VALUES
	PLANT- Precision Engineering	
	DATE- December 19,1991	
	LOCATION-Seattle, Washington	
	RUN- Outlet 3 Total Cr(VI)	

DIA. OF STACK OR CROSS SECTION
30.0000 IN. OR 0.0000 L 0.0000 W IN.

CATCH

FRONT HALF	53.5000 ug.
BACK HALF	0.0000 ug.
TOTAL	53.5000 ug.

BAROMETRIC PRESSURE Pbar	30.46 in. Hg
Ym METER CORRECTION FACTOR	0.9910
STACK STATIC PRESSURE Pst	0.20 in. HOH
NET TIME OF TEST Tt	240 min.
ESTIMATED % MOISTURE	0.9
PITOT COEFFICIENT	0.84
DIA. OF NOZZLE	0.2480 in.
Vw TOTAL H2O COLLECTED	46.85 ml
METER DELTA H@	1.8260 in. HOH
Np # OF POINTS	48

%CO2	%O2	%N2
0.70	21.00	78.30

Milligrams/Dry Std. Cubic Meter =	0.0078	
Grains/Dry Std. Cubic Ft. =	3.40E-06	
Lbs./Hour = 4.340E-04		Kilograms/Hour = 1.968E-04
AFCM 14846.68	DSCFM 14882.64	
Vw gas 2.2066 CF	Vm Std. 242.6857 CF	STACK GAS PRESSURE Ps 30.4747 in. HOH
TRUE % M 0.9011	AVE. DELTA P 0.8175 in. HOH	MWd MOL WT. OF STACK GAS 28.9520
Md 0.9910	AVE. DELTA H 3.49 in. HOH	AVE. SQRT DELTA P 20.8153
Bws(est) 0.0090	AVE. Ts 72 F	PER CENT ISOKINETIC %I 99.4829
Vm TOTAL 241.2110 CF	AVE. Tm 74 F	Vs STACK GAS VELOCITY 50.4090 f/s
MW MOL. WT. OF STACK GAS WET=		28.8534

LEAK CHECK

GAS METER READING

	START	STOP	COMENTS
1	0.0000	0.0000	BF29 = # of Points Read in Spreadsheet
2	0.0000	0.0000	24 Traverse Points used at Outlet 3
3	0.0000	0.0000	
4	0.0000	0.0000	
5	0.0000	0.0000	

APPENDIX B

FIELD DATA SHEETS

Notes:

1. The estimated percent moistures entered into the computerized spreadsheets, for each test run and sample collection site, are listed below.

Test Run No.	Sample Collection Site	% Moisture
1	Inlet 1	1.0
2	Inlet 1	1.1
3	Inlet 1	1.2
1	Inlet 2	0.70
2	Inlet 2	0.60
3	Inlet 2	0.90
1	Outlet	1.0
2	Outlet	1.1
3	Outlet	0.9

2. An assumed moisture content of 1% was recorded on each data sheet while in the field.

1/5

PARTICULATE FIELD DATA

Client: USEPA/Precision Instruments Source: Inlet 1

Time: 1120 - 1640 Run #: 1 Baro. Press.: 30.01

Test Method: EPA 13B Number of Points/ports: 6/2

Sample Time per Point: 30 min Net Total Sample Time: 360 minutes

Stack Dimensions 24 in. Stack Ht. ——— Stack Press -5.4

Upstr. Dist. ~~See Drawing~~ 4' Dwnstr. Dist 18' Assumed Moisture: 1%

Console #: AST #2 dp. Orifice H: ~~Calibration Data~~ 118900 dp. Meter Corr.: 0.9780

EPA Box #: Q Block #2 Probe #: 4ft #1 Cp: 0.84

Nozzle #: 1/4 #1 Pre test size: 0.249 0.245 0.250 = 0.248

K factor: 4.74 Post test size: Same → Average = 0.248

Filter #: ——— Silica #: Run #2, Inlet #1

LEAK CHECKS

	Pre test		Post test	
Sample Train	0.02 CFM @	9 In. Hg	0.00 CFM @	10 In. Hg
Pitot Press.	8.0 In. for 15 sec.		✓ In. for 15 sec.	
Static Press.	9.0 In. for 15 sec.		✓ In. for 15 sec.	
Method 3	——— In. for 15 sec.		——— In. for 15 sec.	

MOISTURE

Inpinger (ml) 220 Gross 200 Tare Lab Data Net

Silica Gel (g) ——— Gross 200 Tare ——— Net ——— Total

GAS COMPOSITION

Sample type N/A

Analysis type N/A

	Pass 1	Pass 2	Pass 3	Average
$\%CO_2$				
$\%O_2$				

Notes: Calibration + Moisture data listed in addition appendix

PARTICULATE FIELD DATA

Client: US EPA Research Inst. Source: Inlet #1

Operators: Kirkland / Dini Test Date: 12/17/91 Run #: 1

Time: 10:20 – 16:40 Test Method: EPA 13-B

K Factor = 4.74

PT NO		CLOCK TIME	DGM READING $V_m(ft^3)$	ΔP (in.) H_2O	ΔH (in.) H_2O	HOT BOX TEMP (°F)	IMP TEMP (°F)	STACK TEMP (°F)	DGM TEMP IN (°F)	DGM TEMP OUT (°F)	SAMPLE TRAIN
A1	0	10:20	386.718	1.1	5.2	—	39	74	37	36	8
	5		392.4	1.0	4.7	—	38	75	43	37	8
	10		398.0	1.0	4.7	—	33	78	48	39	7
	15		403.7	1.0	4.7	—	31	81	52	41	7
	20		408.0	1.0	4.7	—	31	84	55	43	7
	25		414.6	1.0	4.7	—	33	84	58	45	7
A2	30		420.2	.98	4.5	—	34	86	60	48	7
	35		425.3	.98	4.5	—	32	89	62	49	7
	40		430.8	.98	4.5	—	31	91	64	51	7
	45		435.9	.98	4.5	—	30	92	64	52	7
	50		441.5	.98	4.5	—	31	92	66	54	7
	55		446.9	.98	4.5	—	32	94	67	55	7
A3	60		452.3	.84	3.98	—	32	95	69	57	6
	65		457.6	.84	3.98	—	33	96	69	58	6
	70		462.8	.84	3.98	—	33	96	70	59	6
	75		467.7	.84	3.98	—	36	97	71	60	6
	80		472.7	.84	3.98	—	36	97	71	61	6
	85		477.9	.83	3.93	—	37	98	72	62	6
A4	90		483.2	.54	2.6	—	38	98	72	63	4.5
	95		487.1	.54	2.6	—	40	98	71	63	4.5

PARTICULATE FIELD DATA

Client: US EPA / Division Instrument Source: Inlet

Operators: Kirkland / Dini Test Date: 12-17-91 Run #: 1

Time: 10:20 - 16:40 Test Method: EPA 13-B

K = 4.74

PT NO		CLOCK TIME 10:20	DGM READING $V_m(ft^3)$	ΔP (in.) H_2O	ΔH (in.) H_2O	HOT BOX TEMP (°F)	IMP TEMP (°F)	STACK TEMP (°F)	DGM TEMP IN (°F)	DGM TEMP OUT (°F)	SAMPLE TRAIN
A4	100		491.4	.58	2.7	—	37	100	71	63	4.5
	105		495.6	.58	2.7	—	37	103	71	63	4.5
	110		499.8	.57	2.7	—	39	102	72	64	4.5
~~A5~~	115 ~~120~~		503.9	.57	2.7	—	41	101	72	64	4.5
A5	120 ~~125~~		508.0	.55	2.6	—	39	93	72	65	4.5
	125 ~~130~~		512.3	.67	3.2	—	39	93	72	65	5
	130 ~~135~~		516.7	.67	3.2	—	39	94	73	65	5
	135 ~~140~~		521.3	.67	3.2	—	40	94	74	65	5
	140 ~~145~~		525.9	.67	3.2	—	41	94	75	66	5
	145 ~~150~~		530.5	.67	3.2	—	41	94	75	67	5
A-6	150		535.0	.66	3.1	—	41	95	76	67	5
	155		539.5	.65	3.1	—	41	95	76	67	5
	160		544.5	.65	3.1	—	40	93	76	68	5
	165		548.5	.64	3.0	—	40	92	75	67	5
	170		553.0	.64	3.0	—	40	91	75	68	5
	175		557.5	.69	3.3	—	40	90	75	68	5
B-1	180		562.118	.78	3.7	—	47	88	66	65	50
	5		567.3	.78	3.7	—	50	87	68	64	6
	10		572	.78	3.7	—	49	88	71	65	6
	15		576.8	.77	3.7		48	91	72	65	6

PARTICULATE FIELD DATA

Client: US/EPA/Perc. Instrument Source: Inlet

Operators: Kirkland/Gini Test Date: 12-17-91 Run #: 1

Time: 10:20 / 16:40 Test Method: EPA 13-B

K = 4.74

PT NO		CLOCK TIME	DGM READING $V_m(ft^3)$	ΔP (in.) H_2O	ΔH (in.) H_2O	HOT BOX TEMP (°F)	IMP TEMP (°F)	STACK TEMP (°F)	DGM TEMP IN (°F)	DGM TEMP OUT (°F)	SAMPLE TRAIN
	20		582.0	.75	3.5	275	49	93	74	65	5.5
	25		586.5	.77	3.7	—	49	94	74	66	6
B-2	30		591.5	.88	4.2	—	49	94	76	66	6
	35		596.6	.9	4.2	—	51	96	76	67	6
	40		602.0	.87	4.1	—	50	98	77	67	6
	45		607.0	.87	4.1	—	52	99	78	68	6
	50		612	.87	4.1	—	53	99	78	70	6
	55		617.5	.87	4.1	—	50	100	79	69	6
B-3	60		622.8	.83	3.9	—	48	102	79	70	6
	65		627.8	.83	3.9	—	47	101	79	70	6
	70		632.6	.83	3.9	—	45	102	79	70	6
	75		637.8	.83	3.9	—	44	104	80	70	6
	80		642.7	.82	3.9	—	43	105	80	71	6
	85		647.0	.83	3.9	—	43	105	80	71	6
B-4	90		653.0	.83	3.9	—	42	105	80	71	6
	95		658	.85	4.0		43	103	80	71	6
	100		663	.85	4.0		43	103	80	71	6
	105		668	.86	4.1		42	105	80	71	6
	110		673.3	.86	4.1		42	104	80	71	6
	115		678.3	.86	4.1		43	103	80	71	6

PARTICULATE FIELD DATA

Client: US/EPA Perc. Instruments Source: Inlet

Operators: Kirkland/Bini Test Date: 12-17-91 Run #: 1

Time: 10:20 - 16:40 Test Method: EPA 13-B

K = 4.74

PT NO		CLOCK TIME	DGM READING $V_m(ft^3)$	ΔP (in.) H_2O	ΔH (in.) H_2O	HOT BOX TEMP (^0F)	IMP TEMP (^0F)	STACK TEMP (^0F)	DGM TEMP IN (^0F)	DGM TEMP OUT (^0F)	SAMPLE TRAIN
B-5	120		684	.86	4.1	—	44	102	80	71	6
	125		689	.62	2.9	—	44	102	80	71	5
	130		693.2	.62	2.9	—	43	103	79	71	5
	135		697.8	.62	2.9	—	42	105	79	71	5
	140		702.1	.62	2.9	—	42	104	78	71	5
	145		706.5	.63	3	—	42	103	78	71	5
B-6	150		710.9	.63	3	—	41	104	78	71	5
	155		715.3	.62	2.9	—	41	104	78	70	5
	160		719.7	.63	3	—	40	105	77	70	5
	165		724.1	.62	2.9	—	39	106	77	70	5
	170		728.6	.63	~~2.4~~ 3	—	38	105	76	70	5
	175		732.9	.63	3	—	37	104	76	69	5
	180	4:40	737.401	.63	3		37	100	72	68	

PARTICULATE FIELD DATA

1/4

Client: USEPA/Precision Source: Inlet 1

Time: 10:00-14:5 Run #: 2 Baro. Press.: 29.69

Test Method: 13B Number of Points/ports: 6/2

Sample Time per Point: 20 min. Net Total Sample Time: 240 min.

Stack Dimensions ~~See Drawing~~ 24" Stack Ht. ——— Stack Press -6

Upstr. Dist. 4' Dwnstr. Dist. 18' Assumed Moisture: 1%

Console #: AST#2 Orifice H: ~~[illegible]~~ 1.8799 Meter Corr.: 0.9780

EPA Box #: Black #2 Probe #: 4 foot #1 Cp: 0.84

Nozzle #: 1/4' #1 Pre test size: See Run #1 → Average = 0.248

K factor: 4.40 Post test size: See Run #1

Filter #: ——— Silica #: Run #2 Inlet 1

LEAK CHECKS

	Pre test		Post test	
Sample Train	.005 CFM @ 15 In. Hg		0.005 CFM @ 10 In. Hg	
Pitot Press.	✓ In. for 15 sec.		✓ In. for 15 sec.	
Static Press.	✓ In. for 15 sec.		✓ In. for 15 sec.	
Method 3	— In. for 15 sec.		— In. for 15 sec.	

MOISTURE

Inpinger (ml) 220 Gross 200 Tare Lab Data Net

Silica Gel (g) ——— Gross 200 Tare ——— Net ——— Total

GAS COMPOSITION

Sample type N/A

Analysis type N/A

	Pass 1	Pass 2	Pass 3	Average
$\%CO_2$				
$\%O_2$				

Notes:

PARTICULATE FIELD DATA

Client: USEPA/Precision Source: Inlet #1

Operators: ~~Chuck Hames~~ Dini Test Date: 12/18/91 Run #: 2

Time: 10:00 - 14:15 Test Method: 13B

k = ~~4.4~~ 4.3

PT NO		CLOCK TIME	DGM READING $V_m(ft^3)$	ΔP (in.) H_2O	ΔH (in.) H_2O	HOT BOX TEMP (°F)	4 IMP TEMP (°F)	5 STACK TEMP (°F)	6 DGM TEMP IN (°F)	7 DGM TEMP OUT (°F)	SAMPLE TRAIN
A1	0	10:00	639.925	1.0	4.40	—	50	58	53	51	8
	5		645.2	.98	4.3	—	48	58	57	52	8
	10		650.8	.98	4.3	—	48	70	62	53	8
	15		656.2	.98	4.3	—	49	70	65	54	8
A2	20		661.5	.87	3.7	—	48	70	66	55	8
	25		667.2	.96	4.1	—	50	70	67	56	7
	30		672.4	.92	3.95	—	50	71	68	57	7
	35		677.7	.92	3.95	—	44	67	69	58	7
A-3	40		683.2	.83	3.56	—	43	71	71	60	7
	45		688.0	.83	3.56	—	42	71	75	62	7
	50		692.9	.83	3.56	—	42	71	76	63	6
	55		698.2	.82	3.52	—	43	71	77	65	6
A-4	60		703.2	.73	3.13	—	43	~~80~~ 70	77	66	6
	65		708.0	.51	2.2	—	42	68	77	67	5.5
	70		713.0	.65	2.7	—	44	64	77	67	5
	75		717.2	.64	2.8	—	43	68	76	67	5
A-5	80		721.9	1.1	4.7	—	43	~~64~~ 65	76	67	8
	85		727.1	.94	4	—	44	65	78	68	7
	90		732.7	.94	4	—	43	65	82	71	7
	95		738.1	.94	4	—	45	65	82	71	7

3/4

PARTICULATE FIELD DATA

Client: US EPA/Percision Source: Inlet #1

Operators: Dini Test Date: 12-18-91 Run #: 2

Time: 10:00 – 14:15 Test Method: 13B

K = 4.3

PT NO		CLOCK TIME	DGM READING $V_m(ft^3)$	ΔP (in.) H_2O	ΔH (in.) H_2O	HOT BOX TEMP (°F)	IMP TEMP (°F)	STACK TEMP (°F)	DGM TEMP IN (°F)	DGM TEMP OUT (°F)	SAMPLE TRAIN
A-6	100		743.6	~~1.055~~	~~4.3~~ 2.34	—	44	71	82	72	6.0
	105		748.4	.60	2.58	—	44	70	81	72	5.0
	110		752.6	.60	2.58	—	45	68	80	72	4.5
	115		757.0	.62	2.7	—	44	68	80	72	5
B-1	120	12:18	761.4	.68	2.9	—	44	68	69	69	5
	125		766.3	.70	3.0	—	45	70	72	69	5
	130		770.8	.73	3.1	—	45	70	74	68	5
	135		775.4	.7	3	—	45	70	76	68	5
B-2	140		780.1	.7	3	—	45	71	76	68	5
	145		784.7	.75	3.2	—	44	71	76	68	5.5
	150		789.5	.75	3.2	—	44	70	77	69	5.5
	155		794.3	.75	3.2	—	44	70	77	69	5.5
B-3	160		799.3	.70	3.0	—	43	67	77	68	5.0
	165		803.8	.83	3.6	—	43	70	77	68	6.0
	170		808.9	.85	3.7	—	44	70	77	68	6
	175		814.0	.86	3.7	—	45	70	78	68	6
B-4	180		819.1	.6	2.6	—	~~44~~	68	78	69	5
	185		823.6	.74	3.2	—	43	70	77	69	5.5
	190		828.5	.74	3.2	—	44	70	77	69	5.5
	195		833.2	.74	3.2	—	44	70	78	69	5.5

PARTICULATE FIELD DATA

Client: US - EPA / Precision Source: Inlet #1

Operators: Dini Test Date: 12-18-91 Run #: 2

Time: 10:00 14:15 Test Method: 13B

K = 4.3

PT NO		CLOCK TIME	DGM READING $V_m(ft^3)$	ΔP (in.) H_2O	ΔH (in.) H_2O	HOT BOX TEMP (^oF)	IMP TEMP (^oF)	STACK TEMP (^oF)	DGM TEMP IN (^oF)	DGM TEMP OUT (^oF)	SAMPLE TRAIN
B-5	200		838.1	.65	2.8	—	44	70	78	69	5.0
	205		842.6	.64	3.0	—	43	70	78	69	5.0
	210		847.3	.70	3.0	—	45	70	78	69	5.0
	215		851.9	.70	3.0	—	44	70	78	69	5
B-6	220		856.6	.66	2.8	—	47	70	78	69	5.0
	225		861.4	.20	0.9	—	47	70	78	69	5.0
	230		863.9	.16	.7	—	47	70	75	69	1
	235		866.2	.41	1.8	—	46	70	74	69	3
	240	2:15	869.809								

PARTICULATE FIELD DATA

1

Client: USEPA/Precision

Source: Inlet 1

Time: 9:45 - 13:50

Run #: 3

Test Method: 13B

Baro. Press.: ~~29.79~~ 30.46

Number of Points/ports: 6/2

Sample Time per Point: 20

Net Total Sample Time: 240

Stack Dimensions ~~See Drawing~~ 24" dept

Stack Ht. _____

Stack Press -5.7

Upstr. Dist. 4'

Dwnstr. Dist. 18'

Console #: AST # 2

Orifice H: ~~Calibration Date~~ 1.18900

Assumed Moisture: 1%

EPA Box #: Black #2

Probe #: 4 foot #1

Meter Corr.: 0.9780

Nozzle #: 1/4' #1

Cp: 0.84

Pre test size: See Run #1 → Average = 0.248

K factor: 4.3

Post test size: " " "

Filter #: _____

Silica #: Run #3 Inlet

LEAK CHECKS

	Pre test		Post test	
Sample Train	.001 CFM @ 12 In. Hg		0.01 CFM @ 12.0 In. Hg	
Pitot Press.	✓ In. for 15 sec.		✓ In. for 15 sec.	
Static Press.	✓ In. for 15 sec.		✓ In. for 15 sec.	
Method 3	— In. for 15 sec.		— In. for 15 sec.	

MOISTURE

Inpinger (ml)	220	Gross	200	Tare	Lab Data	Net
Silica Gel (g)		Gross	200	Tare	Lab Data	Net	Total

GAS COMPOSITION

Sample type N/A

Analysis type N/A

	Pass 1	Pass 2	Pass 3	Average
$\%CO_2$				
$\%O_2$				

Notes:

PARTICULATE FIELD DATA

Client: USEPA/Precision Source: Inlet 1

Operators: Dini Test Date: 12/19/9 Run #: 3

Time: 9:45 - 13:50 Test Method: 13B

K = 4.3

PT NO		CLOCK TIME	DGM READING $V_m(ft^3)$	ΔP (in.) H_2O	ΔH (in.) H_2O	HOT BOX TEMP (°F)	IMP TEMP (°F)	STACK TEMP (°F)	DGM TEMP IN (°F)	DGM TEMP OUT (°F)	SAMPLE TRAIN
A1	0	9:45	965.906	.77	3.3	—	43	67	45	44	11
	5		970.3	.77	3.3	—	43	67	49	45	11
	10		974.9	.76	3.3	—	44	67	54	46	11
	15		979.3	.77	3.3	—	44	67	57	48	11
A2	20		983.9	.91	3.9	—	50	69	59	49	~~11~~ 6.5
	25		989.7	.92	4.0	—	50	69	62	51	6.5
A	30		995.0	.92	4.0	—	50	69	65	52	6.5
	35		999.7	.91	3.9	—	50	69	66	54	6.5
A3	40		1004.6	.92	3.87	—	51	69	67	55	6
	45		1009.4	.91	3.9	—	51	69	69	57	6
	50		1014.3	.92	4.0	—	51	69	70	58	6
	55		1019.2	.92	4.0	—	51	69	71	59	6.5
A-4	60		1023.3	.69	2.96	—	52	70	72	60	5
	65		1028.4	.78	3.4	—	52	70	72	61	5.5
	70		1033.0	.78	3.4	—	52	70	73	62	5.5
	75		1037.6	.77	3.3	—	52	70	73	63	5
A-5	80		1042.2	.92	4.0	—	54	69	74	63	5
	85		1047.1	.90	3.9	—	54	69	75	64	6
	90		1051.8	.85	3.7	—	54	69	75	65	6
	95		1056.6	.87	3.7	—	54	69	76	66	6

3

PARTICULATE FIELD DATA

Client: US EPA Precision Source: Inlet #1

Operators: Dini Test Date: 12-19-91 Run #: 3

Time: 9:45 - 13:50 Test Method: 13B

K = 4.3

PT NO		CLOCK TIME	DGM READING $V_m(ft^3)$	ΔP (in.) H_2O	ΔH (in.) H_2O	HOT BOX TEMP (°F)	IMP TEMP (°F)	STACK TEMP (°F)	DGM TEMP IN (°F)	DGM TEMP OUT (°F)	SAMPLE TRAIN
A-6	100		1061.3	.87	3.7	—	55	70	76	66	6
	105		1066.2	.85	3.7	—	55	70	77	67	6
	110		1071.1	.85	3.7	—	55	70	78	67	6
	115		1075.9	.86	3.7	—	55	70	78	68	6
B-1	120		1080.7	1.0	4.3	—	55	70	69	68	6.5
	125		1085.9	.99	4.26	—	55	70	73	67	6.0
	130		1091.0	1.0	4.3	—	55	70	76	67	6.0
	135		1096.2	.98	4.2	—	55	70	77	68	6
B-2	140		1111.5	1.0	4.2	—	54	72	78	68	7
	145		106.4	1.0	4.2		54	72	78	69	6.5
	150		111.3	1.0	4.3	—	53	72	79	69	6.5
	155		116.6	1.0	4.3	—	54	72	79	69	6.5
B-3	160		121.5	.94	3.9	—	54	72	79	70	6
	165		126.7	.94	3.9	—	54	72	79	70	6
	170		131.7	.95	4	—	54	72	80	70	6
	175		136.7	.95	4	—	54	72	80	70	6.0
B-4	180		141.9	.8	3.4	—	52	70	80	71	6
	185		146.8	.89	3.8	—	52	70	80	71	6
	190		151.7	.89	3.8	—	52	70	80	71	6
	195		156.6	.59	3.8	—	52	70	80	71	6

PARTICULATE FIELD DATA

Client: US EPA / Precision Source: Inlet 1

Operators: Dini Test Date: 12-19-91 Run #: 3

Time: 9:45 - 13:50 Test Method: 13B

K = 4.3

PT NO		CLOCK TIME	DGM READING $V_m(ft^3)$	ΔP (in.) H_2O	ΔH (in.) H_2O	HOT BOX TEMP (^oF)	IMP TEMP (^oF)	STACK TEMP (^oF)	DGM TEMP IN (^oF)	DGM TEMP OUT (^oF)	SAMPLE TRAIN
B-5	200		161.6	.85	3.56	—	51	71	80	71	6.0
	205		166.2	.83	3.56	—	51	71	79	71	6.0
	210		170.0	.83	3.56	—	51	71	79	71	6.0
	215		175.7	.83	3.6	—	51	71	79	71	6.0
B-6	220		180.7	.83	3.6	—	51	71	79	71	6
	225		1185.3	.83	3.56	—	51	71	78	71	6
	230		1189.9	.83	3.6	—	51	71	78	70	6
	235		1194.8	.83	3.6	—	51	71	77	70	6
	240	1:50	1199.503			—					

1/5

PARTICULATE FIELD DATA

Client: USEPA/Precision Source: Inlet 2

Time: 10:20 - 16:40 Run #: 1 Baro. Press.: 30.01

Test Method: EPA #13B Number of Points/ports: 6/2

Sample Time per Point: 30 min Net Total Sample Time: 360 min.

Stack Dimensions 18" Stack Ht. ——— Stack Press -5.7

Upstr. Dist. ~~See Diagram~~ 4' Dwnstr. Dist. 18' Assumed Moisture: 1%

Console #: AST #2 Orifice H: 1.9420 Meter Corr.: 0.9790

EPA Box #: Silver # Probe #: 4ft #2 Cp: 0.84

Nozzle #: 1/4 #2 Pre test size: 0.245, 0.252, 0.251 = 0.249

K factor: 4.74 Post test size: Same → Average = 0.249

Filter #: ——— Silica #: Run #1 Inlet 2

LEAK CHECKS	Pre test		Post test	
Sample Train	0.01 CFM @	9.0 In. Hg	0.005 CFM @	16 In. Hg
Pitot Press.	3.0 In. for 15 sec.		✓ In. for 15 sec.	
Static Press.	3.5 In. for 15 sec.		✓ In. for 15 sec.	
Method 3	— In. for 15 sec.		— In. for 15 sec.	

MOISTURE

Inpinger (ml) 205 Gross 200 Tare Lab Data Net

Silica Gel (g) ——— Gross 200 Tare ——— Net ——— Total

GAS COMPOSITION NA

Sample type NA

Analysis type NA

	Pass 1	Pass 2	Pass 3	Average
$\%CO_2$				
$\%O_2$				

Notes:

PAGE 2/5

PARTICULATE FIELD DATA

Client: USEPA/Precision Source: Inlet 2

Operators: Parker/Kirkland Test Date: 12-17-91 Run #: 1

Time: 10:20 - 16:40 Test Method: 18B

K. Factor 4.74

PT NO		CLOCK TIME	DGM READING $V_m(ft^3)$	ΔP (in.) H_2O	ΔH (in.) H_2O	HOT BOX TEMP (°F)	IMP TEMP (°F)	STACK TEMP (°F)	DGM TEMP IN (°F)	DGM TEMP OUT (°F)	SAMPLE TRAIN
A1	0	10:20	269.985	.8	3.7	—	42 ~~67~~	71	36	36	7
1	5		273.2	~~.78~~ 3.7	3.8	—	40	72	38	35	7
1	10		278.3	.78	3.8	—	47	74	44	36	7
1	15		283.4	.78	3.8	—	52	77	49	38	8
1	20		288.4	.78	3.8	—	55	80	52	40	7
1	25		293.5	.78	3.7	—	57	80	54	42	7
A2	30		298.5	.55	2.6	—	59	81	57	44	7
2	35		302.9	.57	2.7	—	47	84	58	46	5
2	40		307.3	.55	2.6	—	47	86	59	47	5
2	45		311.5	.56	2.65	—	47	88	60	49	5
2	50		315.8	.55	2.6	—	44	88	61	50	5
2	55		320.1	.55	2.6	—	44	89	62	51	5
A3	60		324.4	.38	1.8	—	44	90	63	52	3
3	65		328.1	.37	1.75	—	44	91	63	54	3
3	70		331.6	.37	1.75	—	44	90	64	55	3
3	75		335.3	.36	1.71	—	44	87	64	56	3
3	80		339.3	.36	1.71	—	44	91	67	58	3
3	85		342.3	.36	1.71	—	44	89	65	57	3
A4	90		345.8	.95	4.5	—	48	91	66	58	8
4	95		351.2	.97	4.6	—	48	94	69	59	9

PARTICULATE FIELD DATA

Client: USEPA/Precision Source: Inlet 2

Operators: Parker/Kirkland Test Date: 12-17-91 Run #: 1

Time: 10:20-16:40 Test Method: 13B

PT NO		CLOCK TIME	DGM READING $V_m(ft^3)$	ΔP (in.) H_2O	ΔH (in.) H_2O	HOT BOX TEMP (°F)	IMP TEMP (°F)	STACK TEMP (°F)	DGM TEMP IN (°F)	DGM TEMP OUT (°F)	SAMPLE TRAIN
A4	100		356.9	.98	4.65	—	48	96	70	60	9
4	105		362.5	.98	4.65	—	48	99	71	60	9
4	110		368.2	.96	4.55	—	54	100	72	61	9
4	115		373.9	.96	4.55	—	52	99	73	62	9
A5	120		379.6	1.5	7.1	—	52	82	73	63	16
	125		386.0	1.1	5.21	—	49	89	74	64	10
	130		392.1	1.2	5.69	—	49	91	74	64	11
	135		398.3	1.2	5.69	—	49	93	75	65	11
	140		404.5	1.2	5.69	—	49	93	76	65	11
	145		410.9	1.1	5.2	—	49	94	76	66	9
A6	150		416.8	1.1	5.2	—	49	96	77	66	10
	155		422.9	1.4	6.6	—	45	86	77	67	10
	160		429.2	1.4	6.6	—	45	85	78	68	10
	165		434.9	1.4	6.6	—	45	83	77	68	10
	170		439.9	1.4	6.6	—	45	82	77	68	10
	175		447.0	1.4	6.6	—	45	79	78	68	10
B1	180		453.045	.65	3.1	—	45	88	65	65	5
	185		458.0	1.1	5.2	—	47	88	69	65	10
	190		463.5	1.1	5.2	—	47	88	72	65	10
	195		469.5	1.1	5.2	—	46	88	74	65	10

PARTICULATE FIELD DATA

Page 4/5

Client: USEPA/Precision Source: Inlet 2

Operators: Parker/Kirkland Test Date: 12/17/91 Run #: 1

Time: 10:20 – 10:40 Test Method: 13B

PT NO		CLOCK TIME	DGM READING $V_m(ft^3)$	ΔP (in.) H_2O	ΔH (in.) H_2O	HOT BOX TEMP (^oF)	IMP TEMP (^oF)	STACK TEMP (^oF)	DGM TEMP IN (^oF)	DGM TEMP OUT (^oF)	SAMPLE TRAIN
	20		475.6	1.1	5.2	—	46	89	75	66	10
	25		481.6	1.1	5.2	—	46	92	76	66	10
B2	30		487.7	1.1	5.2	—	46	94	76	66	10
	35		493.7	1.1	5.2	—	48	96	77	67	10
	40		499.7	1.1	5.2	—	48	95	78	67	10
	45		505.8	1.1	5.2	—	48	96	78	68	10
	50		511.9	1.1	5.2	—	47	97	79	68	10
	55		518.0	1.1	5.2	—	47	96	79	69	10
B-3	60		524.0	.83	3.9	—	51	96	80	69	10
	65		529.6	.79	3.7	—	51	97	79	70	7
	70		534.8	.79	3.7	—	51	99	79	70	7
	75		539.8	.78	3.7	—	45	100	79	70	7
	80		545.2	.79	3.7	—	45	102	79	70	7
	85		550.5	.77	3.6	—	45	102	79	70	7
B-4	90		554.8	.52	2.4	—	45	102	78	70	5
	95		560.2	.5	2.4	—	45	102	77	70	4
	100		564.5	.5	2.4	—	45	102	77	70	4
	105		568.7	.5	2.4	—	45	102	76	70	4
	110		572.8	.5	2.4	—	44	101	76	68	4
	115		577.0	.5	2.4	—	44	102	76	69	4

PARTICULATE FIELD DATA

Client: USEPA/Precision Source: Inlet 2

Operators: Parker/Kirkland Test Date: 12/17/91 Run #: 1

Time: 10:20 – 16:40 Test Method: 13B

PT NO		CLOCK TIME	DGM READING $V_m(ft^3)$	ΔP (in.) H_2O	ΔH (in.) H_2O	HOT BOX TEMP (^0F)	IMP TEMP (^0F)	STACK TEMP (^0F)	DGM TEMP IN (^0F)	DGM TEMP OUT (^0F)	SAMPLE TRAIN
B5	120		581.3	.62	2.9	—	44	102	76	69	4
	125		585.4	.74	3.5	—	44	103	76	69	6
	130		590.3	.74	3.5	—	44	103	77	69	6
	135		595.3	.75	3.5	—	44	105	77	69	6
	140		600.3	.75	3.5	—	43	105	77	69	6
	145		605.3	.71	3.3	—	43	105	77	69	6
B6	150		610.2	.71	3.3	—	43	104	77	69	6
	155		615.1	.71	3.3	—	43	104	77	69	6
	160		620.0	.71	3.3	—	43	104	76	68	6
	165		624.9	.75	3.5	—	42	105	76	69	6
	170		629.9	.70	3.3	—	41	104	75	68	6
	175		634.7	.74	3.5	—	41	104	75	68	6
	180		639.604				41				

PARTICULATE FIELD DATA

Page 1/4

Client: USEPA/Precision Source: Inlet 2

Time: 10:00-1415 Run #: 2 Baro. Press.: 29.69

Test Method: 13B Number of Points/ports: ~~12~~ 6/2

Sample Time per Point: 20min Net Total Sample Time: ~~0~~ 240 min.

Stack Dimensions ~~See Drawing~~ 18" Stack Ht. — Stack Press -5.5

Upstr. Dist. 4' Dwnstr. Dist. 18' Assumed Moisture: 1%

Console #: AST #3 Orifice H: ~~Calibration Data~~ 1.9479 Meter Corr.: 0.9790

EPA Box #: Silver #3 Probe #: 4 Foot #2 Cp: 0.84

Nozzle #: 1/4" #2 Pre test size: See Run #1 → Average = 0.249

K factor: 4.40 Post test size: See Run #1

Filter #: — Silica #: Run #2 Inlet 2

LEAK CHECKS	Pre test		Post test	
Sample Train	.002 CFM @ 12 In. Hg		0.02 CFM @ ~~17~~ 8 In. Hg	
Pitot Press.	✓ In. for 15 sec.		✓ In. for 15 sec.	
Static Press.	✓ In. for 15 sec.		✓ In. for 15 sec.	
Method 3	— In. for 15 sec.		— In. for 15 sec.	

MOISTURE

Inpinger (ml) 220 Gross 200 Tare — Net

Silica Gel (g) — Gross 200 Tare Lab Data Net — Total

GAS COMPOSITION

Sample type NA

Analysis type NA

	Pass 1	Pass 2	Pass 3	Average
$\%CO_2$	—	—	—	
$\%O_2$	—	—	—	

Notes:

PARTICULATE FIELD DATA

Page 2/4

Client: USEPA/Precision Source: Inlet 2

Operators: ~~Ron Kirkland~~ Haynes Test Date: 12/13/91 Run #: 2

Time: 10:00-14:15 Test Method: 13B

K factor ~~[illegible]~~ 4.3

PT NO		CLOCK TIME	DGM READING $V_m(ft^3)$	ΔP (in.) H_2O	ΔH (in.) H_2O	HOT BOX TEMP (^oF)	IMP TEMP (^oF)	STACK TEMP (^oF)	DGM TEMP IN (^oF)	DGM TEMP OUT (^oF)	SAMPLE TRAIN
A1	0	10:00	739.815	.95	4.18	—	50	89	57	56	14
	5		744.6	.93	4.09	—	51	70	68	60	14
	10		749.7	.93	4.09	—	49	70	63	57	14
	15		754.7	.95	4.18	—	49	70	66	58	14
A2	20		759.2	.83	3.6	—	49	70	67	59	13
	25		764.7	.83	3.6	—	50	~~83~~ 70	71	61	13
	30		769.5	.83	3.6	—	48	71	69	60	13
	35		774.3	.83	3.6	—	47	71	70	61	13
A3	40		—	.36	1.5	—	48	71	74	64	6
	45		783.0	.35	1.5	—	49	71	76	66	6
	50		786.1	.38	1.7	—	49	71	77	67	6
	55		789.4	.4	1.8	—	50	71	77	68	6
A4	60		792.7	.89	~~1.7~~ 3.8	—	49	71	77	69	13
	65		796.7	.88	3.8	—	49	71	79	69	13
	70		801.6	.88	3.8	—	51	71	78	70	13
	75		806.5	.88	3.8	—	50	71	78	70	13
A5	80		811.5	.92	4.0	—	51	71	79	70	14
	85		816.5	.92	4.0	—	50	70	79	72	14
	90		821.5	.95	4.1	—	49	70	84	74	14
	95		826.6	.95	4.1	—	49	70	84	74	14

PARTICULATE FIELD DATA

Page 3/4

Client: USEPA/Recision Source: Inlet 2

Operators: Hames Test Date: 12/18/91 Run #: 2

Time: 10:00-14:15 Test Method: 13B

K factor 4.3

PT NO		CLOCK TIME	DGM READING $V_m(ft^3)$	ΔP (in.) H_2O	ΔH (in.) H_2O	HOT BOX TEMP (°F)	IMP TEMP (°F)	STACK TEMP (°F)	DGM TEMP IN (°F)	DGM TEMP OUT (°F)	SAMPLE TRAIN
* A6	100		831.7	1.5	6.45	—	50	68	83	74	18
	105		837.2	1.5	6.45	—	49	68	82	74	18
	110		842.8	1.5	6.45	—	49	68	80	74	18
	115		848.4	1.5	6.45	—	48	68	79	74	18
B1	120	12:18	854.0	1.0	4.3	—	48	68	70	71	3
	125		858.3	1.0	4.3	—	48	68	73	70	4
	130		863.3	1.0	4.3	—	48	68	78	70	3
	135		868.6	1.0	4.3	—	48	68	80	71	4
B2	140		873.8	1.0	4.3	—	48	68	81	71	4
	145		879.0	1.0	4.3	—	49	68	81	71	4
	150		884.3	1.0	4.3	—	50	68	81	71	4
	155		889.5	1.0	4.3	—	49	68	81	72	4
B3	160		894.9	.9	3.8	—	49	68	81	72	4
	165		899.7	.92	3.9	—	49	68	81	72	4
	170		904.6	.92	3.8	—	50	69	81	72	4
	175		909.5	.92	3.8	—	49	69	80	72	4
B4	180		914.4	.48	2.1	—	50	69	80	72	4
	185		918.3	.31	1.3	—	49	69	78	72	2
	190		921.3	.31	1.3	—	49	69	77	71	2
	195		924.2	.31	1.3	—	50	69	76	71	2

* ΔH = 5.0 max

PARTICULATE FIELD DATA

Page 4/4

Client: USEPA/Precision Source: Inlet 2

Operators: Hames Test Date: 12/18/91 Run #: 2

Time: 10:00 - 14:15 Test Method: 13B

PT NO		CLOCK TIME	DGM READING $V_m(ft^3)$	ΔP (in.) H_2O	ΔH (in.) H_2O	HOT BOX TEMP (^0F)	IMP TEMP (^0F)	STACK TEMP (^0F)	DGM TEMP IN (^0F)	DGM TEMP OUT (^0F)	SAMPLE TRAIN
B5	200		927.2	.5	2.2	—	49	69	76	70	3
	205		930.8	.56	2.4	—	49	68	77	71	3
	210		934.8	.56	2.4	—	50	68	77	71	3
	215		938.7	.56	2.4	—	49	69	78	71	3
B6	220		942.6	1.1	4.7	—	46	68	78	71	3
	225		947.8	1.1	4.7	—	45	68	80	71	4
	230		953.1	1.2	5.1	—	45	68	81	71	5
	235		958.6	1.3	5.5	—	45	68	82	72	5
	240	14:15	964.306			—	45				

PAGE 1

PARTICULATE FIELD DATA

Client: USEPA/Precision Source: Inlet 2

Time: 9:45 - 13:50 Run #: 3 Baro. Press.: ~~29.79~~ 30.46

Test Method: 13B Number of Points/ports: 6/2

Sample Time per Point: 20 min Net Total Sample Time: 240 min

Stack Dimensions ~~See Drawing~~ 18" Stack Ht. — Stack Press -5.2

Upstr. Dist. 4' Dwnstr. Dist. 18' Assumed Moisture: 1%

Console #: AST#3 Orifice H: ~~Calibration Data~~ 1.9470 Meter Corr.: 0.9790

EPA Box #: Silver #3 Probe #: 4 foot #2 Cp: .84

Nozzle #: 1/4' #2 Pre test size: See Run #1 → Average = 0.249

K factor: 4.3 Post test size: See Run #1

Filter #: — Silica #: Run #3 Inlet 2

LEAK CHECKS

	Pre test		Post test	
Sample Train	0.02 CFM @	15 In. Hg	0.02 CFM @	10.0 In. Hg
Pitot Press.	✓ In. for 15 sec.		✓ In. for 15 sec.	
Static Press.	✓ In. for 15 sec.		✓ In. for 15 sec.	
Method 3	— In. for 15 sec.		— In. for 15 sec.	

MOISTURE

Inpinger (ml) 210 Gross 200 Tare Moisture Net

Silica Gel (g) — Gross 200 Tare See Lab Net — Total

GAS COMPOSITION

Sample type N/A

Analysis type N/A

	Pass 1	Pass 2	Pass 3	Average
$\%CO_2$				
$\%O_2$				

Notes:

PAGE 2

PARTICULATE FIELD DATA

Client: USEPA/Precision Source: Inlet 2

Operators: Hames Test Date: 12/19/91 Run #: 3

Time: 9:45 – 13:50 Test Method: 13B

K factor 4.3

PT NO		CLOCK TIME	DGM READING $V_m(ft^3)$	ΔP (in.) H_2O	ΔH (in.) H_2O	HOT BOX TEMP (°F)	IMP TEMP (°F)	STACK TEMP (°F)	DGM TEMP IN (°F)	DGM TEMP OUT (°F)	SAMPLE TRAIN
A1	0	9:45	870.010	.85	3.65	—	43	68	47	46	5
	5		874.8	.79	3.4	—	43	68	46	42	5
	10		879.6	.8	3.4	—	43	68	51	43	5
	15		884.4	.8	3.4	—	43	68	55	45	5
A2	20		889.2	.45	1.93	—	43	65	58	47	3
	25		893.5	.5	2.15	—	43	65	59	49	3
	30		897.3	.45	1.93	—	43	65	61	51	3
	35		901.0	.48	2.06	—	43	65	62	52	3
A3	40		904.7	.32	1.37	—	43	67	63	53	2
	45		907.8	.30	1.29	—	43	67	63	54	2
	50		910.8	.30	1.29	—	43	67	64	55	2
	55		913.8	.30	1.29	—	43	67	64	56	2
A4	60		916.2	.74	3.18	—	42	66	65	57	5
	65		921.6	.75	3.2	—	42	66	68	58	5
	70		926.3	.75	3.2	—	42	66	70	59	5
	75		931.6	.75	3.2	—	42	66	71	60	5
A5	80		935.7	1.0	4.3	—	47	68	72	61	6
	85		941.0	1.0	4.3	—	47	68	73	62	6.5
	90		946.4	1.0	4.3	—	47	68	73	63	7
	95		951.9	1.0	4.3	—	47	68	74	64	7

Page 3

PARTICULATE FIELD DATA

Client: USEPA/Precision Source: Inlet 2

Operators: Hames Test Date: 12/19/91 Run #: 3

Time: 9:45 - 13:50 Test Method: 13B

K factor 4.3

PT NO		CLOCK TIME	DGM READING $V_m(ft^3)$	ΔP (in.) H_2O	ΔH (in.) H_2O	HOT BOX TEMP (°F)	IMP TEMP (°F)	STACK TEMP (°F)	DGM TEMP IN (°F)	DGM TEMP OUT (°F)	SAMPLE TRAIN
A6	100		957.4	1.0	4.3	—	47	67	75	64	7
	105		962.7	.95	4.0	—	47	67	76	65	6.5
	110		968.2	.95	4.0	—	47	67	76	66	6.5
	115		973.4	.97	4.17	—	47	67	77	67	7
B1	120		978.7	1.0	4.3	—	47	67	76	67	5
	125		984.4	1.2	5.16	—	47	67	73	66	6
	130		990.3	1.2	5.16	—	47	67	76	67	6
	135		996.2	1.2	5.16	—	47	67	78	68	6
B2	140		1002.2	1.2	5.16	—	45	70	78	68	6
	145		1007.9	1.2	5.16	—	45	70	78	68	7
	150		1014.1	1.2	5.16	—	45	70	79	69	7.5
	155		1019.9	1.2	5.16	—	45	70	79	69	7.5
B3	160		1025.9	.95	4.08	—	45	70	80	69	8
	165		1031.4	.95	4.08	—	45	70	79	70	6
	170		1036.8	.97	4.17	—	45	70	79	70	6
	175		1042.2	.95	4.08	—	45	70	80	70	6
B4	180		1047.5	.35	1.5	—	45	71	79	70	6
	185		1052.4	.37	1.6	—	45	71	78	71	2
	190		1055.8	.36	1.5	—	45	71	76	70	2
	195		1059.2	.36	1.5	—	45	71	76	70	2

PARTICULATE FIELD DATA

Client: USEPA/Precision Source: Inlet 2

Operators: Harnes Test Date: 12/19/91 Run #: 3

Time: 945 1350 Test Method: 13B

PT NO		CLOCK TIME	DGM READING $V_m(ft^3)$	ΔP (in.) H_2O	ΔH (in.) H_2O	HOT BOX TEMP (°F)	IMP TEMP (°F)	STACK TEMP (°F)	DGM TEMP IN (°F)	DGM TEMP OUT (°F)	SAMPLE TRAIN
B5	200		1062.6	.37	1.6	—	47	68	75	70	2
	205		1066.0	.4	1.72	—	47	68	75	69	2
	210		1069.0	.4	1.72	—	47	68	75	69	2
	215		1073.0	.48	2.06	—	47	68	75	69	2
B6	220		1076.8	.45	1.93	—	47	68	74	68	3
	225		1080.5	.42	1.80	—	47	69	74	68	3
	230		1084.3	.45	1.93	—	46	70	73	68	3
	235		1088.0	.42	1.80	—	46	70	73	67	2
B7	240	1350	1091.605			—					

PARTICULATE FIELD DATA

1/8

Client: USEPA/Perc. Instruments Source: Outlet

Time: 10:20-1640 Run #: 1 Baro. Press.: 30.01

Test Method: EPA/13b Number of Points/ports: 12/2

Sample Time per Point: 15min. Net Total Sample Time: 360 min

Stack Dimensions 30" Stack Ht. 95" Stack Press 0.2

Upstr. Dist. 35" ~~2.60" ft~~ Dwnstr. Dist. ~~1.5~~ 60"/34 ft. Assumed Moisture: 1%

Console #: AST #1 blue Orifice H: ~~Calibration Data~~ 4.8269 Meter Corr.: 0.9910

EPA Box #: AST #1 blue Probe #: Sft #1 Cp: 0.84

Nozzle #: 1/4 Glass #3 Pre test size: 0.245 0.250 0.249 = 0.248

K factor: 4.74 Post test size: Same → Average = 0.248

Filter #: — Silica #: run 1 ~~#~~ outlet

LEAK CHECKS

	Pre test			Post test		
Sample Train	0.01	CFM @	15 In. Hg	0.01	CFM @	7 In. Hg
Pitot Press.	2.0	In. for 15 sec.		✓	In. for 15 sec.	
Static Press.	2.5	In. for 15 sec.		✓	In. for 15 sec.	
Method 3	—	In. for 15 sec.		—	In. for 15 sec.	

MOISTURE

Inpinger (ml) 225 Gross 200 Tare Lab Net

Silica Gel (g) ____ Gross 200 Tare Data Net ____ Total

GAS COMPOSITION

Sample type N/A

Analysis type N/A

	Pass 1	Pass 2	Pass 3	Average
$\%CO_2$				
$\%O_2$				

Notes:

PARTICULATE FIELD DATA

2/9

3 dec.

Client: USEPA/ Perc. Instruments Source: Exhaust

Operators: Kirland/ M. Kraus Test Date: 12-17 Run #: 1

Time: 10:20 - 16:40 Test Method: 13b

K = 4.74

PT NO	min.	CLOCK TIME start	DGM READING $V_m(ft^3)$ 3 Dec.	ΔP (in.) H_2O	ΔH (in.) H_2O	HOT BOX TEMP (°F)	IMP TEMP (°F)	STACK TEMP (°F)	DGM TEMP IN (°F)	DGM TEMP OUT (°F)	SAMPLE TRAIN
A-1	0		474.035	.83	3.9		~~80~~ 36	80	39	38	4.0
	5		479.2	.84	4.0		37	80	45	39	3.9
	10		484.4	.84	4.0		41	83	51	40	4
A-2	15		489.7	.82	3.9		44	87	56	42	4
	20		494.9	.83	3.9		44	89	60	44	4
	25		500.1	.82	3.9		46	91	63	46	4
A-3	30		505.3	.81	3.8		47	92	66	48	4
	35		510.4	.81	3.8		47	95	68	50	4
	40		515.6	.80	3.8		47	98	70	53	4
A-4	45		520.8	.80	3.8		47	101	71	54	4
	50		525.9	.76	3.6		48	101	73	57	4
	55		531.0	.76	3.6		48	100	74	58	4
A-5	60		536.0	.72	3.4		49	102	76	59	4
	65		541.0	.72	3.4		50	102	76	60	3.5
	70		545.9	.72	3.4		50	103	77	62	3.5
A-6	75		551.9	.68	3.2		51	107	78	64	3.5
	80		555.7	.66	3.1		50	107	78	65	3.0
	85		560.5	.66	3.1		49	110	80	66	3.0
A-7	90		565.0	.58	2.7		49	109	80	67	3.0
	95		569.8	.61	2.8		50	112	80	67	3.0
				.60	2.8						

3/5

PARTICULATE FIELD DATA

Client: US EPA / Precision Instrum Source: Exhaust

Operators: M. Knox / Kirkland Test Date: 12/17/91 Run #: 1

Time: 10:20-16:40 Test Method: 13B

K=4.74

PT NO		CLOCK TIME	DGM READING $V_m(ft^3)$	ΔP (in.) H_2O	ΔH (in.) H_2O	HOT BOX TEMP (°F)	IMP TEMP (°F)	STACK TEMP (°F)	DGM TEMP IN (°F)	DGM TEMP OUT (°F)	SAMPLE TRAIN
A-7	100	12:08	574.4	.6	2.8	—	50	113	80	68	3
A-8	105		579.1	.66	3.1	—	50	117	82	69	3
	110		583.7	.64	3.0	—	51	116	82	70	3
	115		588.7	.64	3.0	—	52	116	82	71	3
A-9	120		593.4	.66	3.1	—	53	116	83	71	3
	125		598.2	.66	3.1	—	53	117	83	72	3
	130		602.8	.66	3.1	—	54	117	83	72	3
A-10	135		607.9	.69	3.2	—	54	119	84	72	3
	140		612.7	.65	3.08	—	55	118	85	73	3
	145		618.0	.65	3.08	—	55	118	85	79	3
A-11	150		622.6	.69	3.2	—	54	120	85	74	3
	155		627.5	.67	3.2	—	55	120	86	74	3.5
	160		632.4	.66	3.1	—	55	119	86	74	3
A-12	165		637.4	.69	3.2	—	53	118	85	75	3.5
	170		642.0	.70	3.3	—	52	119	86	75	3.5
	175		647.4	.67	3.2	—	52	117	86	75	3.0
B1	180		652.511	1.1	5.2	—	45	108	73	73	5.0
	5		658.6	1.2	5.7	—	47	105	78	72	5.0
	10	1:50	665.1	1.2	5.7	—	49	106	82	73	5.0
B2	15		671.8	1.1	5.2		51	106	84	73	50

4/5

PARTICULATE FIELD DATA

Client: US EPA Pesticides Inst. Source: Exhaust

Operators: Kirkland / Test Date: 10/17/91 Run #: 1

Time: 10:20 - 16:40 Test Method: EPA 13-B

K Factor 4.74

PT NO		CLOCK TIME	DGM READING $V_m(ft^3)$	ΔP (in.) H_2O	ΔH (in.) H_2O	HOT BOX TEMP (^0F)	IMP TEMP (^0F)	STACK TEMP (^0F)	DGM TEMP IN (^0F)	DGM TEMP OUT (^0F)	SAMPLE TRAIN
B2	20		678.3	1.0	4.74	~~52~~	~~106~~ 52	106	86	73	5.0
	25		684.4	1.0	4.74	—	52	107	86	74	5.0
B3	30		689.9	.93	4.4	—	52	109	86	74	5.0
	35		695.9	.93	4.4	—	52	109	87	75	5.0
	40		701.0	.93	4.4	—	52	110	88	76	4.0
B4	45		707.3	.82	3.9	—	53	110	88	76	4.0
	50		712.4	.83	3.9	—	52	109	88	76	4.0
	55		718.2	.83	3.9	—	52	108	88	76	4.0
B5	60		722.9	.74	3.5	—	52	110	88	78	4.0
	65		728.8	.74	3.5	—	51	112	88	77	3.5
	70		733.2	.73	3.5	—	50	114	88	77	4
B6	75		738.9	.66	3.1	—	50	117	88	77	3.5
	80		743.9	.69	3.3	—	49	118	88	78	3.5
	85		748.1	.69	3.3	—	48	118	87	77	3.5
B7	90		754.0	.72	3.4	—	48	119	88	77	3.5
	95		759.5	.72	3.4	—	47	120	87	77	3.5
	100		764.2	.73	3.4	—	47	120	87	77	3.5
B8	105		769.4	.73	3.4	—	46	120	87	77	3.5
	110		774.5	.75	3.6	—	45	120	88	78	3.5
	115		779.3	.74	3.5	—	44	121	87	77	3.5

5/5

PARTICULATE FIELD DATA

Client: US EPA Pensiron Inst. Source: Exhaust

Operators: Kirkland Test Date: 12-17-91 Run #: 1

Time: 10:20 - 16:40 Test Method: EPA 13-B

PT NO		CLOCK TIME	DGM READING $V_m(ft^3)$	ΔP (in.) H_2O	ΔH (in.) H_2O	HOT BOX TEMP (^oF)	IMP TEMP (^oF)	STACK TEMP (^oF)	DGM TEMP IN (^oF)	DGM TEMP OUT (^oF)	SAMPLE TRAIN
B 9	120	3:40	784.9	.76	3.6	—	45	121	88	78	4
	125		790.1	.75	3.6	—	45	120	88	78	4
	130		795.0	.75	3.6	—	44	119	88	78	4
B 10	135	3:55	800.8	.73	3.5	—	44	119	88	78	4
	140		805.9	.73	3.5	—	44	118	87	78	4
	145		1810.9	.74	3.5	—	44	118	87	77	4
B 11	150		816.2	.74	3.5	—	44	119	87	78	4
	155		821.4	.73	3.5	—	43	119	87	77	3.5
	160		826.6	.74	3.5	—	44	119	86	77	3.5
B 12	165		831.8	.78	3.7	—	43	120	86	77	4.0
	170		837.1	.8	3.8	—	43	119	86	77	4.0
	175		842.5	.81	3.8	—	44	119	86	76	4.0
	180		847.922								

PARTICULATE FIELD DATA

1/4

Client: USEPA/Precision Source: Outlet

Time: 10:00-1416 Run #: 2 Baro. Press.: 29.69

Test Method: 13B Number of Points/ports: 12/2

Sample Time per Point: 10 min. Net Total Sample Time: 240 min.

Stack Dimensions ~~See Drawing~~ 30" (Avg) Stack Ht. 95" Stack Press .2

Upstr. Dist. 35" Dwnstr. Dist. 60" Assumed Moisture: 1%

Console #: AST #2 Orifice H: ~~[illegible]~~ 1.8260 Meter Corr.: 0.9910

EPA Box #: 1 Probe #: 5 foot #1 Cp: 0.84

Nozzle #: 1/4" glass #3 Pre test size: See Run #1 → Average = 0.248

K factor: 4.28 Post test size: " "

Filter #: — Silica #: Run #2 Outlet

LEAK CHECKS	Pre test		Post test	
Sample Train	0.01 CFM @	5.0 In. Hg	0.02 CFM @	10.0 In. Hg
Pitot Press.	✓ In. for 15 sec.		✓ In. for 15 sec.	
Static Press.	✓ In. for 15 sec.		✓ In. for 15 sec.	
Method 3	— In. for 15 sec.		— In. for 15 sec.	

MOISTURE

Inpinger (ml) 230 Gross 200 Tare See Net _____ Total

Silica Gel (g) _____ Gross 200 Tare Lab Data Net

GAS COMPOSITION

Sample type N/A

Analysis type N/A

	Pass 1	Pass 2	Pass 3	Average
$\%CO_2$				
$\%O_2$				

Notes:

PARTICULATE FIELD DATA

Client: US EPA Pensicola Instruments Source: Outlet

Operators: Kirkland / PARKER Test Date: 12/18/91 Run #: 2

Time: 10:00 - 1916 Test Method: EPA 13-B

4.28

PT NO		CLOCK TIME	DGM READING $V_m(ft^3)$	ΔP (in.) H_2O	ΔH (in.) H_2O	HOT BOX TEMP (°F)	IMP TEMP (°F)	STACK TEMP (°F)	DGM TEMP IN (°F)	DGM TEMP OUT (°F)	SAMPLE TRAIN
A1	0	10:00	848.068	.72	3.08	—	31	67	56	55	1.5
A1	5		852.9	.73	3.1	—	65	71	58	55	1.5
A2	10		857.3	.82	3.5	—	58	70	62	55	1.5
2	15		863.0	.83	3.6	—	56	71	66	56	2.0
A3	20		867.9	.81	3.5	—	52	72	69	58	2.0
3	25		873.2	.81	3.5	—	51	70	71	58	1.5
A4	30		878.3	.79	3.4	—	51	73	73	60	1.5
4	35		883.5	.79	3.4	—	53	71	75	60	1.5
A5	40		888.6	.75	3.2	—	52	70	77	62	1.5
5	45		893.4	.74	3.2	—	52	71	79	64	1.5
A6	50		898.4	.68	2.9	—	51	70	81	65	1.5
A6	55		903.2	.68	2.9	—	50	72	80	67	1.5
A7	60		907.8	.68	2.9	—	50	71	83	68	1.5
7	65		912.7	.68	2.9	—	48	73	83	69	1.5
A8	70		917.5	.57	2.4	—	49	72	84	70	1.5
8	75		921.9	.64	2.7	—	47	73	83	71	1.5
A9	80		926.4	.66	2.8	—	46	73	84	72	1.5
9	85		929.6	.66	2.8	—	46	73	84	72	1.5
A10	90		936.3	.68	2.9	—	45	74	87	74	1.5
10	95		940.8	.68	2.9	—	45	74	87	75	1.5

PARTICULATE FIELD DATA

3/4

Client: US EPA Persision Instruments Source: Outlet

Operators: Kirkland / PARKER Test Date: 12/18/91 Run #: 2

Time: 10:00 / 1416 Test Method: EPA - 13-B

12:18

PT NO		CLOCK TIME	DGM READING $V_m(ft^3)$	ΔP (in.) H_2O	ΔH (in.) H_2O	HOT BOX TEMP (°F)	IMP TEMP (°F)	STACK TEMP (°F)	DGM TEMP IN (°F)	DGM TEMP OUT (°F)	SAMPLE TRAIN
A 11	100	11:41	945.5	.72	3.1	—	53	74	88	75	1.5
11	105		950.5	.76	3.3	—	52	73	88	76	1.5
A 12	110		955.7	.75	3.2	—	52	75	88	76	1.5
12	115		960.8	.75	3.2	—	51	76	88	75	1.5
B 1	120	12:18	965.7	.75	3.2	—	50	70	88	76	1.5
1	125		969.7	.75	3.2	—	50	70	78	77	1.5
B 2	130		974.2	1.1	4.7	—	49	70	78	73	2.0
2	135		979.1	1.1	4.7	—	50	71	82	73	2.0
B 3	140		984.9	.89	3.8	—	50	71	85	74	2.0
3	145		990.6	.82	4.0	—	51	74	82	74	2.0
B 4	150		995	.79	3.4	—	50	73	85	74	2.0
4	155		1000.5	.81	3.5	—	51	73	85	75	2.0
B 5	160	1005.9	~~1009.0~~	.70	3.0	—	51	73	85	74	2.0
5	165		1010.6	.72	3.0	—	51	73	85	75	2.0
B 6	170	50	1016.0	.67	2.9	—	50	74	85	75	2.0
6	175		1020.0	.67	2.9	—	50	74	86	76	2.0
B 7	180	60	1024.7	.65	2.8	—	49	74	86	75	2.0
7	185		1029.3	.72	3.0	—	50	73	86	76	2.0
B 8	190	70	1034.1	.72	3.0	—	50	74	86	76	2.0
8	195		1038.8	.68	2.9	—	50	74	86	76	2.0

PARTICULATE FIELD DATA

Client: USEPA Precision Instruments Source: Outlet

Operators: Kirkland/Parker Test Date: 12/18/91 Run #: 2

Time: 10:00 — 1416 Test Method: EPA-13-B

K = 4.3

PT NO		CLOCK TIME	DGM READING $V_m(ft^3)$	ΔP (in.) H_2O	ΔH (in.) H_2O	HOT BOX TEMP (^oF)	IMP TEMP (^oF)	STACK TEMP (^oF)	DGM TEMP IN (^oF)	DGM TEMP OUT (^oF)	SAMPLE TRAIN
B9	80		1043.6	0.68	2.9	—	49	74	87	76	2.0
	85		1048.2	0.68	2.9	-	49	74	87	76	2.0
B10	90		1052.8	.8	3.4	—	49	74	86	76	2.0
	95		1058.7	.8	3.4	—	45	72	87	77	2.0
B11	100		1063.1	.8	3.4	—	45	72	88	77	2.0
	105		1068.1	.79	.34	—	45	73	88	77	2.0
B12	110		1073.2	.79	.34	—	45	72	88	78	2.0
	115		1078.2	.79	.34	—	45	72	86	77	2.0
—	120	1416	1083.555								

1/4

PARTICULATE FIELD DATA

Client: USEPA/Precision Source: Outlet

Time: 9:45 - 1350 Run #: 3 Baro. Press.: ~~24.79~~ 30.46

Test Method: 13B Number of Points/ports: 12/2

Sample Time per Point: 10 min. Net Total Sample Time: 240 min.

Stack Dimensions See Drawing 30" Stack Ht. 95" Stack Press +0.3

Upstr. Dist. 35" Dwnstr. Dist. 60" Assumed Moisture: 1%

Console #: AST #1 Orifice H: ~~Calibration Point~~ Meter Corr.: 0.9910

EPA Box #: Blue #1 Probe #: 5 foot #1 Cp: 0.84

Nozzle #: 1/4' #3 Pre test size: See Run #1 → Average = 0.248

K factor: 4.3 Post test size: "

Filter #: — Silica #: Run #3 Outlet

LEAK CHECKS

	Pre test		Post test	
Sample Train	0.05 CFM @	12.0 In. Hg	0.015 CFM @	7.0 In. Hg
Pitot Press.	✓ In. for 15 sec.		✓ In. for 15 sec.	
Static Press.	✓ In. for 15 sec.		✓ In. for 15 sec.	
Method 3	— In. for 15 sec.		— In. for 15 sec.	

MOISTURE

Inpinger (ml) 210 Gross 200 Tare 210 Net

Silica Gel (g) ____ Gross 200 Tare See lab Data Net ____ Total

GAS COMPOSITION

Sample type NA

Analysis type NA

	Pass 1	Pass 2	Pass 3	Average
%CO_2				
%O_2				

Notes:

PARTICULATE FIELD DATA

2/4

Client: USEPA/Precision Source: Outlet

Operators: Kirkland/PARKER Test Date: 12/19/91 Run #: 3

Time: 945 — 1350 Test Method: 13B

K = 4.3

PT NO		CLOCK TIME	DGM READING $V_m(ft^3)$	ΔP (in.) H_2O	ΔH (in.) H_2O	HOT BOX TEMP (°F)	IMP TEMP (°F)	STACK TEMP (°F)	DGM TEMP IN (°F)	DGM TEMP OUT (°F)	SAMPLE TRAIN
A1	0	945	083.680	.83	3.54	—	43	70	43	43	4.0
	5		088.6	.88	3.7	—	43	70	50	45	4.0
A2	10		093.9	.88	3.7	—	43	71	56	48	4.0
	15		098.7	.89	3.8	—	43	71	60	48	4.0
A3	20		103.8	.85	3.65	—	45	71	64	50	3.5
	25		108.9	.87	3.7	—	45	71	67	52	4.0
A4	30		113.9	.85	3.65	—	46	72	69	53	4.0
	35		119.0	.85	3.65	—	46	72	71	55	3.5
A5	40		124.2	.84	3.61	—	43	71.9	72	57	4.0
	45		129.4	.84	3.61	—	43	~~75~~ 71.9	75	59	4.0
A6	50		133.9	.81	3.4	—	45	70	76	60	3.0
	55		139.1	.84	3.61	—	45	70	77	62	3.0
A7	60		144.2	.76	3.27	—	46	71	78	64	3.0
	65		148.9	.71	3.05	—	46	71	79	65	3.0
A8	70		153.6	.73	3.1	—	47	71	79	66	3.0
	75		158.3	.73	3.1	—	47	71	80	67	3.0
A9	80		163.5	.74	3.2	—	45	72	80	68	3.0
	85		167.9	.71	3.05	—	45	72	82	69	3.0
A10	90		172.5	.71	3.05	—	43	72	82	70	3.0
	95		177.4	.71	3.05	—	43	72	83	71	3.0

PARTICULATE FIELD DATA

Client: US EPA Precision Instruments Source: Outlet 3/4

Operators: ~~Kirkland~~/PARKER Test Date: 12/19/91 Run #: 3

Time: 9:45 — 1350 Test Method: 13b

PT NO		CLOCK TIME	DGM READING $V_m(ft^3)$	ΔP (in.) H_2O	ΔH (in.) H_2O	HOT BOX TEMP (°F)	IMP TEMP (°F)	STACK TEMP (°F)	DGM TEMP IN (°F)	DGM TEMP OUT (°F)	SAMPLE TRAIN
A_{11}	100		181.9	.71	3.05	—	43	72	83	71	3
	105		187.3	.71	3.05	—	43	72	84	72	3
A_{12}	110		191.7	.73	3.14	—	43	72	85	72	3
	115		196.4	.73	3.14	—	43	72	85	73	3.5
—	~~120~~	—	~~201.3~~	~~1.0~~	~~3.~~	—	—	—	—	—	—
1145 1150 B_1	~~130~~		201.3	1.0	4.3	—	43	72	75	73	4.0
	5		207.0	1.0	4.3	—	43	72	81	73	4.0
B_2	10		213.0	1.0	4.7	—	43	72	84	73	4.5
	15		218.4	1.1	4.7	—	43	72	86	74	4.5
B_3	20		224.6	.92	3.95	—	43	72	86	74	4
	25		229.8	.96	4.1	—	43	72	86	75	4
B_4	30		235.5	.85	3.6	—	43	72	87	75	4
	35		240.5	.85	3.6	—	43	72	87	75	4
B_5	40		245.3	.84	3.6	—	44	72	87	76	4
	45		251.3	.81	3.4	—	44	72	87	76	3.5
B_6	50		255.8	.80	3.4	—	44	72	87	76	3.0
	55		260.9	.80	3.4	—	44	72	87	76	3.0
B_7	60		266.0	.80	3.4	—	44	72	87	76	3.0
	65		270.5	.76	3.2	—	44	72	87	77	3.0
B_8	70		275.7	.78	3.3	—	44	72	87	77	3.0

PARTICULATE FIELD DATA

4/4

Client: USEPA/PRECISION Source: OUTLET

Operators: PARKER Test Date: 12/19/91 Run #: 3

Time: 9:45 – 13:50 Test Method: 13-B

K=4.3

PT NO		CLOCK TIME	DGM READING $V_m(ft^3)$	ΔP (in.) H_2O	ΔH (in.) H_2O	HOT BOX TEMP (°F)	IMP TEMP (°F)	STACK TEMP (°F)	DGM TEMP IN (°F)	DGM TEMP OUT (°F)	SAMPLE TRAIN
	75		280.5	.82	3.5	—	44	72	87	77	3.5
B_9	80		285.7	.82	3.5	—	44	72	87	77	3.0
	85		290.4	.82	3.5	—	44	72	87	77	3.0
B_{10}	90		295.6	.77	3.3	—	44	72	87	77	3.0
	95		300.3	.77	3.3	—	44	72	87	77	3.0
B_{11}	100		305.9	.76	3.24	—	44	72	86	77	3.0
	105		310.5	.73	3.13	—	45	72	86	77	3.0
B_{12}	110		314.9	.73	3.13	—	45	72	85	77	3.0
	115		319.9	.74	3.18	—	45	72	85	76	3.0
	120		324.891								

APPENDIX C

SAMPLING SHEETS AND SUMMARY OF RESULTS (AST AND U.S. EPA)

U. S. ENVIRONMENTAL PROTECTION AGENCY REVIEW OF TEST AND EMISSION DATA

The following pages are provided by the U. S. Environmental Protection Agency to ensure that all calculations pertaining to emission results presented in this report are correct. The pages consist of a Sampling Summary Sheet that contains summarized field data, a Summary of Emission Sheets that provides pollutant concentration data and mass emission data, and photocopies of HP-41 printer tapes that were used to determine these values.

SAMPLING SUMMARY SHEET

PLANT Precision Engineering LOCATION Seattle, Washington

SAMPLED SOURCE Inlet #1 (A)

Run	Date	N_p	(3) Y_m	(4) ΔH	(5) P Bar.	(6) V_m	(7) T_m	(8) V_m Std.	(9) %	(10) P_{st}	17 P_s	(18) T_s	(19) VP	(20) V_w	21 $V_{w_{gas}}$	22 %M	23 M_d
I-1-1	17 Dec 91	72/6	.978	3.65	30.01	350.683	68	347.075		-5.4	29.61	70		72.82	3.43	0.98	0.99
I-1-2	18 Dec 91	48/4	.978	3.22	29.69	229.884	70	224.028		-6.0	29.25	69		54.70	2.57	1.14	.989
I-1-3	19 Dec 91	48/4	.978	3.78	30.46	233.597	68	234.703		-5.7	30.04	70		60.95	2.87	1.21	.988

C-3

Run	(24) CO_2	(25) O_2	26 N_2	(27) CO	(28) —	29 MW_d	30 MW	(31) C_p	(32) $\sqrt{\Delta P_s (T_s + 460)}$	(33) T_t	(34) D_n	35 V_s	(36) D_s	(37) Area	38 ACFM	(39) DSCFM	40 %I
I-1-1	0.0	20.8	79.2			28.83	28.73	.84	20.3255	360	.248	49.68	24"	3.14	9364	9142	98.82
I-1-2	0.0	20.8	79.2			28.83	28.71	.84	19.7497	240	.248	48.94	24"	3.14	9226	8899	98.29
I-1-3	0.0	20.8	79.2			28.83	28.70	.84	21.5252	240	.248	52.64	24"	3.14	9923	9805	93.46

$$\text{Std.} = T_m \frac{17.64 \times V_m \left(P\ \text{Bar.} + \frac{\Delta H}{13.6}\right)}{(T_m + 460)}$$

$$\%M = \frac{100 \times V_{w_{gas}}}{V_m\ \text{Std.} + V_{w_{gas}}}$$

$$_{gas} = 0.0471\ V_w$$

$$M_d = \frac{100 - \%M}{100}$$

$$_d = \%CO_2 \times .44 + (\%O_2 \times .32) + (\%CO + \%N_2) \times .28 + \left(\%\text{Other} \times \frac{\text{Mol. wt.}}{100}\right)$$

$$= MW_d \times M_d + 18(1 - M_d)$$

$$P_s = P\ \text{Bar.} \pm \frac{P_{st}}{13.6}$$

$$= 85.49 \times C_p \sqrt{\Delta P_s (T_s + 460)} \left[\frac{1}{P_s \times MW}\right]^{1/2}$$

$$= \frac{0.09450 \times (T_s + 460) \times V_m\ \text{Std.}}{V_s \times T_t \times P_s \times M_d \times A_n}$$

N_p = Total No. of Sampling points

Y_m = Meter Box Correction Factor

ΔH = Average Orfice Pressure Drop, inches H_2O

P Bar. = Barometric Pressure, Inches Hg, Absolute

V_m = Volume of Dry Gas at Meter Conditions, DCF

T_m = Average Meter Temperature, °F.

V_m Std. = Volume of Dry Gas at STP, DSCF[a]

% = Per Cent other gas removed before Dry Gas Meter

P_{st} = Static Pressure of Stack Gas, inches H_2O

P_s = Stack Gas Pressure, Inches Hg.

T_s = Average Stack Temperature, °F

VP = Vapor Pressure of H_2O At Stack Temperature

V_w = Total H_2O Collected in Impingers and Silica Gel

$V_{w_{gas}}$ = Volumn of water vapor collected at STP, SCF[b]

%M = Per Cent Moisture by volume

M_d = Mole Fraction of Dry Gas

$\%CO_2$ = Volume % Dry

$\%O_2$ = Volume % Dry

$\%N_2$ = Volume % Dry

%CO = Volume % Dry

MW_d = Molecular Weight of Stack Gas Dry Basis

MW = Molecular Weight of Stack Gas, Wet Basis

C_p = Pitot Tube Coefficient

$\sqrt{\Delta P_s (T_s + 460)}$ Is determined by averaging the square root of the product of the velocity head (P) and the absolute stack temperature from each sampling point.

T_t = Net time of test in minutes

D_n = Sampling Nozzle Diameter, inches

A_n = Area of Nozzle opening, ft^2.

V_s = Stack Gas Velocity at Stack Conditions, Feet per second.

D_s = Diameter of Stack, inches

Area = Area of duct in ft^2

ACFM = Actual Cubic Feet per minute

DSCFM = Dry Standard Cubic Feet per minute

%I = Per Cent Isokinetic

[a] Dry Standard Cubic Feet @ 68°F, 29.92 in. Hg.

[b] Standard Conditions @ 68°F, 29.92 in. Hg.

SUMMARY OF EMISSIONS

PLANT Precision Engineering LOCATION Seattle, Washington

SAMPLED SOURCE Inlet #1 (A)

RUN	DATE	(1) V_m Std.	(2) DSCFM	FRONT HALF MILLIGRAMS PROBE	CYCLONE	FILTER	Cr +6 (3) [redacted]	Total Cr (4) [redacted]	Field Analysis (5) Diphenylcarbazide [redacted]
I-1-1	17 Dec 91	347.075	9142				2.889	3.029	2.8625
I-1-2	18 Dec 91	224.028	8899				1.774	1.834	.7434
I-1-3	19 Dec 91	234.703	9805				2.891	2.988	.8480

CONCENTRATIONS

RUN	Cr +6 [redacted] Gr/DSCF	Mg/M³	Lb/Hr	Kg/Hr	Total Cr [redacted] Gr/DSCF	Mg/M³	Lb/Hr	Kg/Hr	Field Analysis (Diphenylcarbazide) [redacted] Gr/DSCF	Mg/M³	Lb/Hr	Kg/Hr
I-1-1	1.29×10^{-4}	.2939	.0101	.0046	1.35×10^{-4}	.3082	.01056	.0048	1.27×10^{-4}	.2913	.0100	.0045
I-1-2	1.22×10^{-4}	.2796	.0093	.0042	1.26×10^{-4}	.2891	.00964	.0044	5.12×10^{-5}	.1172	.0039	.0018
I-1-3	1.90×10^{-4}	.4350	.0160	.0072	1.97×10^{-4}	.4496	.01651	.0075	5.58×10^{-5}	.1276	.0047	.0021
	6	7	8	9	10	17	18	19	20	21	22	23

AVE - .01224

Remarks:

```
          XROM "METH 5"
RUN NUMBER 1
Inlet #1                RUN
METER BOX Y?
          .9780         RUN
DELTA H?
          3.6500        RUN
BAR PRESS ?
         30.0100        RUN
METER VOL ?
        350.6830        RUN
MTR TEMP F?
         68.0000        RUN
STATIC HOH IN ?
         -5.4000        RUN
STACK TEMP.
         70.0000        RUN
ML. WATER ?
         72.8200        RUN

SAT % = 2.5

IMP. % HOH = 1.0

% HOH=1.0

% CO2?
          0.0000        RUN
% OXYGEN?
         20.8000        RUN

MWd =28.83
MW WET=28.73

SQRT PSTS ?
         20.1755        RUN
TIME MIN ?
        360.0000        RUN
NOZZLE DIA ?
          .2480         RUN
STK DIA INCH ?
         24.0000        RUN
```

```
* VOL MTR STD = 347.075
  STK PRES ABS = 29.61
  VOL HOH GAS = 3.43
  % MOISTURE = 0.98
  MOL DRY GAS = 0.990
  % NITROGEN = 79.20
  MOL WT DRY = 28.83
  MOL WT WET = 28.73
  VELOCITY FPS = 49.68
  STACK AREA = 3.14
  STACK ACFM = 9,364.
* STACK DSCFM = 9,142.
  % ISOKINETIC =  98.82

END OF FIELD DATA
```

```
J
          XROM "MASSFLO"
Total Chrome
RUN NUMBER
I-1-1
                        RUN

VOL MTR STD ?
     347.0750000        RUN
STACK DSCFM ?
    9,142.000000        RUN
FRONT 1/2 MG ?
       3.0290000        RUN
BACK 1/2 MG ?
                        RUN

F  GR/DSCF = 0.0001347
F  MG/MMM = 0.3081931
F  LB/HR = 0.0105535
F  KG/HR = 0.0047871
```

```
Cr+6      XROM "MASSFLO"
RUN NUMBER
I-1-1
                        RUN

VOL MTR STD ?
     347.0750000        RUN
STACK DSCFM ?
    9,142.000000        RUN
FRONT 1/2 MG ?
       2.8890000        RUN
BACK 1/2 MG ?
                        RUN

F  GR/DSCF = 0.0001285
F  MG/MMM = 0.2939484
F  LB/HR = 0.0100657
F  KG/HR = 0.0045658
```

```
Field Analysis
          XROM "MASSFLO"
Diphenylcarbazide
RUN NUMBER
I-1-1
                        RUN

VOL MTR STD ?
     347.0750000        RUN
STACK DSCFM ?
    9,142.000000        RUN
FRONT 1/2 MG ?
       2.8625000        RUN
BACK 1/2 MG ?
                        RUN

F  GR/DSCF = 0.0001273
F  MG/MMM = 0.2912521
F  LB/HR = 0.0099734
F  KG/HR = 0.0045239
```

```
XROM "METH 5"
RUN NUMBER
I-1-2
                    RUN
METER BOX Y?
        .9786       RUN
DELTA H?
        3.2200      RUN
BAR PRESS ?
        29.6900     RUN
METER VOL ?
        229.8840    RUN
MTR TEMP F?
        70.0000     RUN
% OTHER GAS
REMOVED BEFORE
DRY GAS METER ?
                    RUN
STATIC HOH IN ?
        -6.0000     RUN
STACK TEMP.
        69.0000     RUN
ML. WATER ?
        54.7000     RUN

SAT % = 2.4

IMP. % HOH = 1.1

% HOH=1.1

% CO2?
        0.0000      RUN
% OXYGEN?
        20.9000     RUN
% CO ?
                    RUN
MOL WT OTHER?
                    RUN

MWd =28.83
MW WET=28.71

SQRT PSTS ?
        19.7497     RUN
TIME MIN ?
        240.0000    RUN
NOZZLE DIA ?
        .2480       RUN
STK DIA INCH ?
        24.0000     RUN
```

```
* VOL MTR STD = 224.029
  STK PRES ABS = 29.25
  VOL HOH GAS = 2.57
  % MOISTURE = 1.14
  MOL DRY GAS = 0.989
  % NITROGEN = 79.20
  MOL WT DRY = 28.87
  MOL WT WET = 28.71
  VELOCITY FPS = 48.94
  STACK AREA = 3.14
  STACK ACFM = 9.226.
* STACK DSCFM = 8.899.
  % ISOKINETIC =  98.29

END OF FIELD DATA
```

```
XROM "MASSFLO"

RUN NUMBER
I-1-2
Cr+6                RUN

VOL MTR STD ?
      224.0280000   RUN
STACK DSCFM ?
      8,899.000000  RUN
FRONT 1/2 MG ?
        1.7740000   RUN
BACK 1/2 MG ?
                    RUN

F  GR/DSCF = 0.0001222
F  MG/MMM = 0.2796393
F  LB/HR = 0.0093212
F  KG/HR = 0.0042281
```

```
RUN NUMBER
I-1-2
Total Chromium      RUN
VOL MTR STD ?
      224.0280000   RUN
STACK DSCFM ?
      8,899.000000  RUN
FRONT 1/2 MG ?
        1.8340000   RUN
BACK 1/2 MG ?
                    RUN

F  GR/DSCF = 0.0001263
F  MG/MMM = 0.2890972
F  LB/HR = 0.0096364
F  KG/HR = 0.0043711

XROM "MASSFLO"
```

```
RUN NUMBER
Diphenylcarbazide   CLA
Field Analysis      CLA
I-1-2
                    RUN

VOL MTR STD ?
      224.0280000   RUN
STACK DSCFM ?
      8,899.000000  RUN
FRONT 1/2 MG ?
        .7434000    RUN
BACK 1/2 MG ?
                    RUN

F  GR/DSCF = 0.0000512
F  MG/MMM = 0.1171837
F  LB/HR = 0.0039061
F  KG/HR = 0.0017718

XROM "MASSFLO"
```

```
          XROM "METH 5"
RUN NUMBER
I-1-3
                    RUN
METER BOX Y?
          .9780     RUN
DELTA H?
          3.7300    RUN
BAR PRESS ?
         30.4600    RUN
METER VOL ?
        233.5970    RUN
MTR TEMP F?
         68.0000    RUN
% OTHER GAS
REMOVED BEFORE
DRY GAS METER ?
                    RUN
STATIC HOH IN ?
         -5.7000    RUN
STACK TEMP.
         70.0000    RUN
ML. WATER ?
         60.9500    RUN

SAT % = 2.5

IMP. % HOH = 1.3

% HOH=1.2

% CO2?
          0.0000    RUN
% OXYGEN?
         20.8000    RUN
% CO ?
                    RUN
MOL WT OTHER?
                    RUN
                    RUN

MWd =28.83
MW WET=28.70

SQRT PSTS ?
         21.5252    RUN
TIME MIN ?
        240.0000    RUN
NOZZLE DIA ?
          .2480     RUN
STK DIA INCH ?
         24.0000    RUN
```

```
* VOL MTR STD = 234.703
  STK PRES ABS = 30.04
  VOL HOH GAS = 2.87
  % MOISTURE = 1.21
  MOL DRY GAS = 0.990
  % NITROGEN = 79.20
  MOL WT DRY = 28.83
  MOL WT WET = 28.70
  VELOCITY FPS = 52.64
  STACK AREA = 3.14
  STACK ACFM = 9 922.
* STACK DSCFM = 9,805.
  % ISOKINETIC =  93.4

END OF FIELD DATA
```

```
RUN NUMBER
I-1-3
Total Chromium      RUN
VOL MTR STD ?
      234.7030000   RUN
STACK DSCFM ?
    9,805.000000    RUN
FRONT 1/2 MG ?
        2.9800000   RUN
BACK 1/2 MG ?
                    RUN

F  GR/DSCF = 0.0001965
F  MG/MMM = 0.4495819
F  LB/HR = 0.0165115
F  KG/HR = 0.0074896
```

```
          XROM "MASSFLO"

RUN NUMBER
I-1-3
Cr+6                RUN
VOL MTR STD ?
      234.7030000   RUN
STACK DSCFM ?
    9,805.000000    RUN
FRONT 1/2 MG ?
        2.8910000   RUN
BACK 1/2 MG ?
                    RUN

F  GR/DSCF = 0.0001901
F  MG/MMM = 0.4349371
F  LB/HR = 0.0159755
F  KG/HR = 0.0072465
```

```
RUN NUMBER
I-1-3
Field Analysis      RUN
Diphenylcarbazide
VOL MTR STD ?
      234.7030000   RUN
STACK DSCFM ?
    9,805.000000    RUN
FRONT 1/2 MG ?
          .8480000  RUN
BACK 1/2 MG ?
                    RUN

F  GR/DSCF = 0.0000558
F  MG/MMM = 0.1275922
F  LB/HR = 0.0046860
F  KG/HR = 0.0021256
```

SAMPLING SUMMARY SHEET

PLANT Precision Engineering LOCATION Seattle, Washington

SAMPLED SOURCE Inlet #2 (B)

Run	Date	N_p	3 Y_m	4 ΔH	5 P Bar.	6 V_m	7 T_m	8 V_m Std.	9 %	10 P_{st}	17 P_s	18 T_s	19 VP	20 V_w	21 $V_{w_{gas}}$	22 %M	23 M_d
I-2-1	17 Dec 91	72/6	.979	3.54	30.01	369.619	66	367.484		-5.7	29.59	69		53.03	2.5	0.67	.993
I-2-2	18 Dec 91	48/4	.979	3.70	29.69	224.491	73	218.020		-5.5	29.29	70		30.30	1.43	0.65	.994
I-2-3	19 Dec 91	48/4	.979	3.15	30.46	221.595	67	222.958		-5.7	30.04	68		44.85	2.11	0.94	.991

	24 CO_2	25 O_2	26 N_2	27 CO	28 —	29 MW_d	30 MW	31 C_p	32 $\sqrt{\Delta P_s (T_s + 460)}$	33 T_t	34 D_n	35 V_s	36 D_s	37 Area	38 ACFM	39 DSCFM	40 %I
I-2-1	0.0	20.8	79.2			28.83	28.76	.84	20.7629	360	.249	51.11	18"	1.77	5419	5313	100.45
I-2-2	0.0	20.8	79.2			28.83	28.76	.84	21.0710	240	.249	52.14	18"	1.77	5528	5355	88.69
I-2-3	0.0	20.8	79.2			28.83	28.73	.84	19.2082	240	.249	46.25	18"	1.77	4978	4951	98.10

$$\text{Std.} = T_m \frac{17.64 \times V_m \left(P\ \text{Bar.} + \frac{\Delta H}{13.6}\right)}{(T_m + 460)}$$

$$= 0.0471\ V_w$$

$$= XCO_2 \times .44 + (XO_2 \times .32) + (XCO + XN_2) \times .28 + \left(X\text{Other} \times \frac{\text{Mol. wt.}}{100}\right)$$

$$= MW_d \times M_d + 18(1 - M_d)$$

$$= 85.49 \times C_p \sqrt{\Delta P_s (T_s + 460)} \left[\frac{1}{P_s \times MW}\right]^{1/2}$$

$$= \frac{0.09450 \times (T_s + 460) \times V_m\ \text{Std.}}{V_s \times T_t \times P_s \times M_d \times A_n}$$

$$XM = \frac{100 \times V_{w_{gas}}}{V_m\ \text{Std.} + V_{w_{gas}}}$$

$$M_d = \frac{100 - XM}{100}$$

$$P_s = P\ \text{Bar.} \pm \frac{P_{st}}{13.6}$$

N_p = Total No. of Sampling points

Y_m = Meter Box Correction Factor

ΔH = Average Orfice Pressure Drop, Inches H_2O

P Bar. = Barometric Pressure, Inches Hg, Absolute

V_m = Volume of Dry Gas at Meter Conditions, DCF

T_m = Average Meter Temperature, °F.

V_m Std. = Volume of Dry Gas at STP, DSCF[a]

X = Per Cent other gas removed before Dry Gas Meter

P_{st} = Static Pressure of Stack Gas, inches H_2O

P_s = Stack Gas Pressure, Inches Hg

T_s = Average Stack Temperature °

VP = Vapor Pressure of H_2O At Stack Temperature

V_w = Total H_2O Collected in Impingers and Silica Gel

$V_{w_{gas}}$ = Volume of water vapor collected at STP, SCF[b]

XM = Per Cent Moisture by volume

M_d = Mole Fraction of Dry Gas

XCO_2 = Volume X Dry

XO_2 = Volume X Dry

XN_2 = Volume X Dry

XCO = Volume X Dry

MW_d = Molecular Weight of Stack Gas Dry Basis

MW = Molecular Weight of Stack Gas, Wet Basis

$\sqrt{\Delta P (T_s + 460)}$ Is determined by averaging the square root of the product of the velocity head (P) and the absolute stack temperature from each sampling point.

T_t = Net time of test in minutes

D_n = Sampling Nozzle Diameter, Inches

A_n = Area of Nozzle opening, ft^2.

V_s = Stack Gas Velocity at Stack Conditions, Feet per second.

D_s = Diameter of Stack, inches

Area = Area of duct in ft^2

ACFM = Actual Cubic Feet per minute

DSCFM = Dry Standard Cubic Feet per minute

XI = Per Cent Isokinetic

[a]Dry Standard Cubic Feet @ 68°F, 29.92 in. Hg.

SUMMARY OF EMISSIONS

PLANT Precision Engineering LOCATION Seattle, Washington

SAMPLED SOURCE Inlet # 2 (B)

RUN	DATE	(1) V_m Std.	(2) DSCFM
I-2-1	17 Dec 91	367.484	5313
I-2-2	18 Dec 91	218.020	5355
I-2-3	19 Dec 91	222.958	4951

FRONT HALF MILLIGRAMS			Cr^{+6} (3)	Total Cr (4)	Field Analysis Diphenylcarbazide (5)
PROBE	CYCLONE	FILTER	[redacted]	[redacted]	[redacted]
			1.589	1.573	1.5175
			.770	.894	.8082
			10.593	.933	.779
			1.0593		

RUN	Cr^{+6} [redacted] Gr/DSCF	Mg/M³	Lb/Hr	Kg/Hr
I-2-1	6.67×10^{-5}	.1527	.0030	.0014
I-2-2	5.45×10^{-5}	.1247	.0025	.0011
I-2-3	7.33×10^{-4}	1.678	.0311	.0141
I-2-3	7.33×10^{-5}	.1678	.0031	.0014
	6	7	8	9

CONCENTRATIONS

Total Cr [redacted] Gr/DSCF	Mg/M³	Lb/Hr	Kg/Hr
6.61×10^{-5}	.1511	.00299	.00136
6.33×10^{-5}	.1448	.00290	.0013
6.46×10^{-5}	.1478	.00274	.0012
10	17	18	19

Field Analysis (Diphenylcarbazide) [redacted] Gr/DSCF	Mg/M³	Lb/Hr	Kg/Hr
6.37×10^{-5}	.1458	.0029	.0013
5.72×10^{-5}	.1309	.0026	.0012
5.39×10^{-5}	.1234	.0023	.0010
20	21	22	23

Remarks: Run # I-2-3 for Cr^{+6} appears to have a decimal misplaced. This run was calculated using 10.593 mg for the first catch and 1.0593 mg for the adjusted catch. Based on the two other analytical methods 1.0593 mg seems more likely. (Denoted by ☆)

```
        XEQ "MMETH 5"
NONEXISTENT
        XROM "METH 5"
RUN NUMBER )
Inlet #2            RUN
METER BOX Y?
          .9790     RUN
DELTA H?
         3.5400     RUN
BAR PRESS ?
        30.0100     RUN
METER VOL ?
       369.6190     RUN
MTR TEMP F?
        66.0000     RUN
STATIC HOH IN ?
        -5.7000     RUN
STACK TEMP.
        69.0000     RUN
ML. WATER ?
        53.0300     RUN


SAT % = 2.4


IMP. % HOH = 0.7

% HOH=0.7


% CO2?
         0.0000     RUN
% OXYGEN?
        20.0000     RUN

MWd =28.83
MW WET=28.76


SQRT PSTS ?
        20.7629     RUN
TIME MIN ?
       360.0000     RUN
NOZZLE DIA ?
          .2490     RUN
STK DIA INCH ?
        18.0000     RUN
```

```
* VOL MTR STD = 367.484
  STK PRES ABS = 29.59
  VOL HOH GAS = 2.50
  % MOISTURE = 0.67
  MOL DRY GAS = 0.993
  % NITROGEN = 79.20
  MOL WT DRY = 28.83
  MOL WT WET = 28.76
  VELOCITY FPS = 51.11
  STACK AREA = 1.77
  STACK ACFM = 5,419.
* STACK DSCFM = 5,313.
  % ISOKINETIC =  100.45


END OF FIELD DATA
```

Total Chromium

```
XROM "MASSFLO"

RUN NUMBER
I-2-1                RUN

VOL MTR STD ?
?XR,VSV
      367.4840000    RUN
STACK DSCFM ?
     5,313.000000    RUN
FRONT 1/2 MG ?
        1.5730000    RUN
BACK 1/2 MG ?
                     RUN


F  GR/DSCF = 0.0000661
F  MG/MMM = 0.1511601
F  LB/HR = 0.0030082
F  KG/HR = 0.0013645
```

Cr^{+6}

```
XROM "MASSFLO"

RUN NUMBER
I-2-1
                     RUN

VOL MTR STD ?
      367.4840000    RUN
STACK DSCFM ?
     5,313.000000    RUN
FRONT 1/2 MG ?
        1.5890000    RUN
BACK 1/2 MG ?
                     RUN


F  GR/DSCF = 0.0000667
F  MG/MMM = 0.1526977
F  LB/HR = 0.0030388
F  KG/HR = 0.0013784
```

Field Analysis Diphenylcarbazide

```
XROM "MASSFLO"

RUN NUMBER
I-2-1
                     RUN

VOL MTR STD ?
      367.4840000    RUN
STACK DSCFM ?
     5,313.000000    RUN
FRONT 1/2 MG ?
        1.5175000    RUN
BACK 1/2 MG ?
                     RUN


F  GR/DSCF = 0.0000637
F  MG/MMM = 0.1458267
F  LB/HR = 0.0029021
F  KG/HR = 0.0013164
```

```
XROM "METH 5"
RUN NUMBER
I-2-2
                    RUN
METER BOX Y?
        .9790       RUN
DELTA H?
        3.7000      RUN
BAR PRESS ?
        29.6900     RUN
METER VOL ?
        224.4910    RUN
MTR TEMP F?
        73.2000     RUN
% OTHER GAS
REMOVED BEFORE
DRY GAS METER ?
                    RUN
STATIC HOH IN ?
        -5.5000     RUN
STACK TEMP.
        70.0000     RUN
ML. WATER ?
        30.3000     RUN

SAT % = 2.5

IMP. % HOH = 0.6

% HOH=0.6

% CO2?
        0.0000      RUN
% OXYGEN?
        20.9000     RUN
% CO ?
                    RUN
MOL WT OTHER?
                    RUN

MWd =28.83
MW WET=28.76

SQRT PSTS ?
        21.0710     RUN
TIME MIN ?
        240.0000    RUN
NOZZLE DIA ?
        .2490       RUN
STK DIA INCH ?
        18.0000     RUN
```

```
* VOL MTR STD = 218.020
  STK PRES ABS = 29.29
  VOL HOH GAS = 1.43
  % MOISTURE = 0.65
  MOL DRY GAS = 0.994
  % NITROGEN = 79.30
  MOL WT DRY = 28.83
  MOL WT WET = 28.76
  VELOCITY FPS = 52.14
  STACK AREA = 1.77
  STACK ACFM = 5,528.
* STACK DSCFM = 5,355.
  % ISOKINETIC = 98.69

END OF FIELD DATA
```

```
RUN NUMBER
I-2-2
Total Cr            RUN
VOL MTR STD ?
      218.0200000   RUN
STACK DSCFM ?
      5,355.000000  RUN
FRONT 1/2 MG ?
        .8940000    RUN
BACK 1/2 MG ?
                    RUN

F  GR/DSCF = 0.0000633
F  MG/MMM = 0.1448065
F  LB/HR = 0.0029046
F  KG/HR = 0.0013175
```

```
RUN NUMBER
I-2-2
Cr+6                RUN
VOL MTR STD ?
      218.0200000   RUN
STACK DSCFM ?
      5,355.000000  RUN
FRONT 1/2 MG ?
        .7700000    RUN
BACK 1/2 MG ?
                    RUN

F  GR/DSCF = 0.0000545
F  MG/MMM = 0.1247215
F  LB/HR = 0.0025017
F  KG/HR = 0.0011348

XROM "MASSFLO"
```

```
RUN NUMBER
I-2-2
Field Analysis      R
Diphenylcarbazide
VOL MTR STD ?
      218.0200000   RUN
STACK DSCFM ?
      5,355.000000  RUN
FRONT 1/2 MG ?
        .8082000    RUN
BACK 1/2 MG ?
                    RUN

F  GR/DSCF = 0.0000572
F  MG/MMM = 0.1309090
F  LB/HR = 0.0026258
F  KG/HR = 0.0011911

XROM "MASSFLO"
```

XROM "METH F

RUN NUMBER
I-2-3
RUN

METER BOX Y?
.9790 RUN

DELTA H?
3.1500 RUN

BAR PRESS ?
30.4600 RUN

METER VOL ?
221.5950 RUN

MTR TEMP F?
67.0000 RUN

% OTHER GAS
REMOVED BEFORE
DRY GAS METER ?
RUN

STATIC HOH IN ?
-5.7000 RUN

STACK TEMP.
68.0000 RUN

ML. WATER ?
44.3500 RUN

SAT % = 2.3

IMP. % HOH = 0.9

% HOH=0.9

% CO2?
0.0000 RUN

% OXYGEN?
20.0000 RUN

% CO ?
RUN

MOL WT OTHER?
RUN

MWd =28.83
MW WET=28.73

SQRT PSTS ?
19.2082 RUN

TIME MIN ?
240.0000 RUN

NOZZLE DIA ?
.2490 RUN

STK DIA INCH ?
18.0000 RUN

* VOL MTR STD = 222.95[illegible]
STK PRES ABS = 30.04
VOL HOH GAS = 2.11
% MOISTURE = 0.94
MOL DRY GAS = 0.991
% NITROGEN = 79.20
MOL WT DRY = 28.83
MOL WT WET = 28.77
VELOCITY FPS = 46.35
STACK AREA = 1.77
STACK ACFM = 4,973.
* STACK DSCFM = 4,951.
% ISOKINETIC = 98.1[illegible]

END OF FIELD DATA

XROM "MASSFLO"

RUN NUMBER
I-2-3
Total Cr
RUN

VOL MTR STD ?
222.9580000 RUN

STACK DSCFM ?
4,951.000000 RUN

FRONT 1/2 MG ?
.9330000 RUN

BACK 1/2 MG ?
RUN

F GR/DSCF = 0.0000646
F MG/MMM = 0.1477765
F LB/HR = 0.0027405
F KG/HR = 0.0012431

RUN NUMBER
I-2-3
Cr +6
RUN

VOL MTR STD ?
222.9580000 RUN

STACK DSCFM ?
4,951.000000 RUN

FRONT 1/2 MG ?
10.5930000 RUN

BACK 1/2 MG ?
looks Suspicious
RUN

F GR/DSCF = 0.0007332
F MG/MMM = 1.6778102
F LB/HR = 0.0311148
F KG/HR = 0.0141137

RUN NUMBER
I-2-3
Field Analysis
Diphenylcarbazide
RUN

VOL MTR STD ?
222.9580000 RUN

STACK DSCFM ?
4,951.000000 RUN

FRONT 1/2 MG ?
.7790000 RUN

BACK 1/2 MG ?
RUN

F GR/DSCF = 0.0000539
F MG/MMM = 0.1233847
F LB/HR = 0.0022882
F KG/HR = 0.0010379

SAMPLING SUMMARY SHEET

PLANT Precision Engineering LOCATION Seattle, Washington

SAMPLED SOURCE Outlet

Run	Date	N_p	(3) Y_m	(4) ΔH	(5) P Bar.	(6) V_m	(7) T_m	(8) V_m Std.	(9) %	(10) P_{st}	17 P_s	(18) T_s	(19) VP	(20) V_w	21 $V_{w_{gas}}$	22 %M	23 M_d
0-1	17 Dec 91	72/6	.991	3.67	30.01	373.887	75	370.071	/	0.2	30.02	72	/	77.0	3.62	0.97	.99
0-2	18 Dec 91	48/4	.991	3.21	29.69	235.487	76	229.930	/	0.2	29.70	72	/	53.5	2.52	1.08	.989
0-3	19 Dec 91	48/4	.991	3.49	30.46	241.211	74	242.646	/	0.2	30.48	72	/	46.85	2.21	0.90	.991

Run	(24) CO_2	(25) O_2	26 N_2	(27) CO	(28) —	29 MW_d	30 MW	(31) C_p	(32) $\sqrt{\Delta P_s (T_s + 460)}$	(33) T_t	(34) D_n	35 V_s	(36) D_s	(37) Area	38 ACFM	(39) DSCFM	40 %I
0-1	0.0	20.8	79.2	/	/	28.83	28.73	.84	20.1391	360	.248	49.24	30"	4.91	14503	14305	105.2
0-2	0.0	20.8	79.2	/	/	28.83	28.71	.84	19.9831	240	.248	49.14	30"	4.91	14472	14105	99.45
0-3	0.0	20.8	79.2	/	/	28.83	28.73	.84	20.7918	240	.248	50.45	30"	4.91	14859	14889	99.43

$$V_m \text{ Std.} = Y_m \frac{17.64 \times V_m \left(P \text{ Bar.} + \frac{\Delta H}{13.6}\right)}{(T_m + 460)}$$

$$\%M = \frac{100 \times V_{w_{gas}}}{V_m \text{ Std.} + V_{w_{gas}}}$$

$$V_{w_{gas}} = 0.0471\ V_w$$

$$M_d = \frac{100 - \%M}{100}$$

$$MW_d = \%CO_2 \times .44 + (\%O_2 \times .32) + (\%CO + \%N_2) \times .28 + \left(\%\text{Other} \times \frac{\text{Mol. wt.}}{100}\right)$$

$$MW = MW_d \times M_d + 18(1 - M_d)$$

$$P_s = P \text{ Bar.} + \frac{P_{st}}{13.6}$$

$$V_s = 85.49 \times C_p \sqrt{\Delta P_s (T_s + 460)} \left[\frac{1}{P_s \times MW}\right]^{1/2}$$

$$\%I = \frac{0.09450 \times (T_s + 460) \times V_m \text{ Std.}}{V_s \times T_t \times P_s \times M_d \times A_n}$$

N_p = Total No. of Sampling points

Y_m = Meter Box Correction Factor

ΔH = Average Orfice Pressure Drop, inches H_2O

P Bar. = Barometric Pressure, Inches Hg, Absolute

V_m = Volume of Dry Gas at Meter Conditions, DCF

T_m = Average Meter Temperature, °F.

V_m Std. = Volume of Dry Gas at STP, DSCF[a]

I = Per Cent other gas removed before Dry Gas Meter

P_{st} = Static Pressure of Stack Gas, inches H_2O

P_s = Stack Gas Pressure, inches Hg.

T_s = Average Stack Temperature, °F

VP = Vapor Pressure of H_2O At Stack Temperature

V_w = Total H_2O Collected in Impingers and Silica Gel

$V_{w_{gas}}$ = Volume of water vapor collected at STP, SCF[b]

%M = Per Cent Moisture by volume

M_d = Mole Fraction of Dry Gas

$\%CO_2$ = Volume % Dry

$\%O_2$ = Volume % Dry

$\%N_2$ = Volume % Dry

%CO = Volume % Dry

MW_d = Molecular Weight of Stack Gas Dry Basis

MW = Molecular Weight of Stack Gas, Wet Basis

C_p = Pitot Tube Coefficient

$\sqrt{\Delta P_s (T_s + 460)}$ Is determined by averaging the square root of the product of the velocity head (P) and the absolute stack temperature from each sampling point.

T_t = Net time of test in minutes

D_n = Sampling Nozzle Diameter, inches

A_n = Area of Nozzle opening, ft^2.

V_s = Stack Gas Velocity at Stack Conditions, Feet per second

D_s = Diameter of Stack, inches

Area = Area of duct in ft^2

ACFM = Actual Cubic Feet per minute

DSCFM = Dry Standard Cubic Feet per minute

%I = Per Cent Isokinetic

[a] Dry Standard Cubic Feet @ 68°F, 29.92 in. Hg.

[b] Standard Conditions @ 68°F. 29.92 in. Hg.

PLANT Precision Engineering LOCATION Seattle, Washington

SAMPLED SOURCE Outlet

RUN	DATE	(1) V_m Std.	(2) DSCFM
O-1	17 Dec 91	370.077	14305
O-2	18 Dec 91	229.930	14105
O-3	19 Dec 91	242.646	14889

FRONT HALF MILLIGRAMS			
PROBE	CYCLONE	FILTER	Cr^{+6} (3) [redacted]
			.146
			.0606
			.0535

Total Cr (4) [redacted]	Field Analysis Diphenylcarbazide, (HeX) [redacted] + [redacted]
.137	.123
.0683	.0378
.0613	.0503

CONCENTRATIONS

RUN	Cr^{+6} [redacted] Gr/DSCF	Mg/M^3	Lb/Hr	Kg/Hr
O-1	6.1×10^{-6}	.0139	7.42×10^{-4}	3.39×10^{-4}
O-2	4.1×10^{-6}	.00931	4.92×10^{-4}	2.23×10^{-4}
O-3	3.4×10^{-6}	.00779	4.34×10^{-4}	1.97×10^{-4}
	6	7	8	9

Total Cr [redacted] Gr/DSCF	Mg/M^3	Lb/Hr	Kg/Hr
5.7×10^{-6}	.0131	7.01×10^{-4}	3.18×10^{-4}
4.6×10^{-6}	.0105	5.54×10^{-4}	2.51×10^{-4}
3.9×10^{-6}	.00892	4.98×10^{-4}	2.26×10^{-4}
10	17	18	19

Field Analysis (Cr^{+6}) [redacted] Gr/DSCF	Mg/M^3	Lb/Hr	Kg/Hr
5.1×10^{-6}	.0117	6.29×10^{-4}	2.85×10^{-4}
2.5×10^{-6}	.00581	3.08×10^{-4}	1.39×10^{-4}
3.2×10^{-6}	.00732	4.08×10^{-4}	1.85×10^{-4}
20	21	22	23

Remarks:

```
          XROM "METH 5"
RUN NUMBER
0-1
                    RUN
METER BOX Y?
          .9910     RUN
DELTA H?
         3.6700     RUN
BAR PRESS ?
        30.0100     RUN
METER VOL ?
       373.8870     RUN
MTR TEMP F?
        75.0000     RUN
% OTHER GAS
REMOVED BEFORE
DRY GAS METER ?
                    RUN
STATIC HOH IN ?
          .2000     RUN
STACK TEMP.
        72.0000     RUN
ML. WATER ?
        77.0000     RUN

SAT % = 2.6

IMP. % HOH = 1.0

% HOH=1.0

% CO2?
         0.0000     RUN
% OXYGEN?
        20.8000     RUN
% CO ?
                    RUN
MOL WT OTHER?
                    RUN

MWd =28.83
MW WET=28.73

SQRT PSTS ?
        20.1391     RUN
TIME MIN ?
       360.0000     RUN
NOZZLE DIA ?
          .2480     RUN
STK DIA INCH ?
        30.0000     RUN
```

```
* VOL MTR STD = 370.071
  STK PRES ABS = 30.02
  VOL HOH GAS = 3.62
  % MOISTURE = 0.97
  MOL DRY GAS = 0.990
  % NITROGEN = 79.20
  MOL WT DRY = 28.83
  MOL WT WET = 28.73
  VELOCITY FPS = 49.24
  STACK AREA = 4.91
  STACK ACFM = 14,503.
* STACK DSCFM = 14,305.
  % ISOKINETIC =  105.2%

END OF FIELD DATA
```

Total Cr

```
ZYS TE
          XROM "MASSFLO"

RUN NUMBER
0-1
                    RUN

VOL MTR STD ?
      370.0710000   RUN
STACK DSCFM ?
     14,809.00000   RUN
FRONT 1/2 MG ?
         .1370000   RUN
BACK 1/2 MG
                    RUN

F  GR/DSCF = 0.0000057
F  MG/MMM = 0.0130773
F  LB/HR = 0.0007252
F  KG/HR = 0.0003289
```

Hex Chrome

```
          XROM "MASSFLO"

RUN NUMBER
0-1
                    RUN

VOL MTR STD ?
       370.0710     RUN
STACK DSCFM ?
      14,809.0000   RUN
FRONT 1/2 MG ?
          .1460     RUN
BACK 1/2 MG ?
                    FIX ?
                    RUN

F  GR/DSCF = 0.0000061
F  MG/MMM = 0.0139320
F  LB/HR = 0.0007728
F  KG/HR = 0.0003505
```

Field Analysis
Diphenylcarbazide

```
          XROM "MASSFLO"

RUN NUMBER
0-1                 RUN

VOL MTR STD ?
TR , RZ
      370.0710000   RUN
STACK DSCFM ?
     14,809.00000   RUN
FRONT 1/2 MG ?
         .1230000   RUN
BACK 1/2 MG ?
                    RUN

F  GR/DSCF = 0.0000051
F  MG/MMM = 0.0117373
F  LB/HR = 0.0006511
F  KG/HR = 0.0002953
```

```
          XROM "METH 5"
RUN NUMBER
0-2
                    RUN
METER BOX Y?
          .9910     RUN
DELTA H?
         3.2100     RUN
BAR PRESS ?
        29.6900     RUN
METER VOL ?
       235.4370     RUN
MTR TEMP F?
        76.0000     RUN
% OTHER GAS
REMOVED BEFORE
DRY GAS METER ?
                    RUN
STATIC HOH IN ?
          .2000     RUN
STACK TEMP.
        72.0000     RUN
ML. WATER ?
        53.5000     RUN

SAT % = 2.7

IMP. % HOH = 1.1

% HOH=1.1

% CO2?
         0.0000     RUN
% OXYGEN?
        20.9000     RUN
% CO ?
                    RUN
MOL WT OTHER?
                    RUN

MWd =28.83
MW WET=28.71

SQRT PSTS ?
        19.9931     RUN
TIME MIN ?
       240.0000     RUN
NOZZLE DIA ?
          .2480     RUN
STK DIA INCH ?
        30.0000     RUN
```

```
* VOL MTR STD = 229.970
  STK PRES ABS = 29.70
  VOL HOH GAS = 2.52
  % MOISTURE = 1.08
  MOL DRY GAS = 0.989
  % NITROGEN = 79.30
  MOL WT DRY = 28.83
  MOL WT WET = 28.71
  VELOCITY FPS = 49.14
  STACK AREA = 4.91
  STACK ACFM = 14,472.
* STACK DSCFM = 14,105.
  % ISOKINETIC =  99.49

END OF FIELD DATA
```

Total Cr

```
          XROM "MASSFLO"
RUN NUMBER
0-2
                    RUN
VOL MTR STD ?
     229.9300000    RUN
STACK DSCFM ?
     14,105.00000   RUN
FRONT 1/2 MG ?
         .0683000   RUN
BACK 1/2 MG ?
                    RUN

F  GR/DSCF = 0.0000046
F  MG/MMM = 0.0104999
F  LB/HR = 0.0005542
F  KG/HR = 0.0002514
```

Hex Chrome

```
          XROM "MASSFLO"
RUN NUMBER
0-2
                    RUN
VOL MTR STD ?
     229.9300000    RUN
STACK DSCFM ?
     14,105.00000   RUN
FRONT 1/2 MG ?
         .0606000   RUN
BACK 1/2 MG ?
                    RUN

F  GR/DSCF = 0.0000041
F  MG/MMM = 0.0093073
F  LB/HR = 0.0004917
F  KG/HR = 0.0002230
```

Field Analysis
Diphenylcarbazide

```
          XROM "MASSFLO"
RUN NUMBER
0-2
                    RUN
VOL MTR STD ?
     229.9300000    RUN
STACK DSCFM ?
     14,105.00000   RUN
FRONT 1/2 MG ?
         .0378000   RUN
BACK 1/2 MG ?
                    RUN

F  GR/DSCF = 0.0000025
F  MG/MMM = 0.0053055
F  LB/HR = 0.0003067
F  KG/HR = 0.0001391
```

```
          XROM "METH 5"
RUN NUMBER   0-3
                          RUN
METER BOX Y?
          .9910           RUN
DELTA H?
          3.4900          RUN
BAR PRESS ?
         30.4600          RUN
METER VOL ?
        241.2110          RUN
MTR TEMP F?
         74.0000          RUN
% OTHER GAS
REMOVED BEFORE
DRY GAS METER ?
                          RUN
STATIC HOH IN ?
           .3000          RUN
STACK TEMP.
         72.0000          RUN
ML. WATER ?
         46.9500          RUN

SAT % = 2.6

IMP. % HOH = 0.9

% HOH=0.9

% CO2?
          0.0000          RUN
% OXYGEN?
         20.8000          RUN
% CO ?
                          RUN
MOL WT OTHER?
                          RUN

MWd =28.83
MW WET=28.73

SQRT PSTS ?
         20.7918          RUN
TIME MIN ?
        240.0000          RUN
NOZZLE DIA ?
           .2480          RUN
STK DIA INCH ?
         30.0000          RUN
```

```
* VOL MTR STD = 242.646
  STK PRES ABS = 30.49
  VOL HOH GAS = 2.21
  % MOISTURE = 0.90
  MOL DRY GAS = 0.991
  % NITROGEN = 79.20
  MOL WT DRY = 28.83
  MOL WT WET = 28.73
  VELOCITY FPS = 50.45
  STACK AREA = 4.91
  STACK ACFM = 14.859.
* STACK DSCFM = 14.889.
  % ISOKINETIC =  99.45

END OF FIELD DATA
```

Total Cr

```
XROM "MASSFLO"
RUN NUMBER
0-3
                          RUN
                          RUN

VOL MTR STD ?
      242.6460000         RUN
STACK DSCFM ?
     14,889.00000         RUN
FRONT 1/2 MG ?
          .0613000        RUN
BACK 1/2 MG ?
                          RUN

F  GR/DSCF = 0.0000079
F  MG/MMM = 0.0003214
F  LB/HR = 0.0004975
F  KG/HR = 0.0002257
```

```
ASN "MASSFLO" TO
XROM "MASSFLO"
```

Hex Chrome

```
RUN NUMBER
0-3
                          RUN

VOL MTR STD ?
      242.6460000         RUN
STACK DSCFM ?
     14,889.00000         RUN
FRONT 1/2 MG ?
          .0535000        RUN
BACK 1/2 MG ?
                          RUN

F  GR/DSCF = 0.0000034
F  MG/MMM = 0.0077862
F  LB/HR = 0.0004342
F  KG/HR = 0.0001970
```

Field Analysis
Diphenylcarbazide

```
XROM "MASSFLO"
RUN NUMBER
0-3
                          RUN

VOL MTR STD ?
      242.6460000         RUN
STACK DSCFM ?
     14,889.00000         RUN
FRONT 1/2 MG ?
          .0503000        RUN
BACK 1/2 MG ?
                          RUN

F  GR/DSCF = 0.0000032
F  MG/MMM = 0.0073205
F  LB/HR = 0.0004083
F  KG/HR = 0.0001852
```

APPENDIX D

LABORATORY ANALYSIS REPORTS AND CHAIN OF CUSTODY FORMS

RESEARCH TRIANGLE INSTITUTE

Center for Environmental Measurements and Quality Assurance

February 14, 1992

Mr. Tom Yaroch
Advanced Systems Technology, Inc.
1627 Peachtree Road, Suite 222
Atlanta, GA 30309

Dear Tom,

Enclosed are the Cr(VI) and Total Chromium analysis results as determined by ion chromatography and ICP, respectively, for the impinger samples received on December 23, 1991 for RTI Project No. 4848-02L, Advanced Systems Technology, Inc. P.O. No. 0074-003-91 and 0004-101-92.

If you have any questions, please call me at 919-541-6569 or Peter Grohse at 919-541-6897.

Sincerely,

Kate K. Luk, Ph.D.

Ref: 4848-02L
cc: W. Gutknecht
P. Grohse
J. Merricks
C. Decker

Post Office Box 12194 Research Triangle Park, North Carolina 27709-2194
Telephone 919 541-6914 Fax: 919 541-5929

RTI Project No. : 4848–02L

Samples : Impinger Samples
Company : Advanced Systems Technology (P.O. No. : 0074–003–91 and 0004–101–92)
Analyte : Cr(VI) and Total Cr
Methods of Analysis : Ion Chromatography / Post Column Reaction for Cr(VI); ICP for Total Cr
Samples Received : 12–23–92
Report Date : 2–14–92; Revised 9–2–92

Sample	Total Volume mL	Cr(VI) ug/mL	Total Cr(VI) ug	Vol.(mL) Taken for Digestion	Total Cr ug/mL	Total Cr ug
Sampling Train Blk	420	0.00737	3.10	200	0.0320	3.36
Inlet 1 Run 1	439	6.58	2889	100	13.8	3029
Inlet 1 Run 2	799	2.22	1774	100	4.59	1834
Inlet 1 Run 3	769	3.76	2891	100	7.77	2988
Inlet 2 Run 1	445	3.57	1589	100	7.07	1573
Inlet 2 Run 2	813	0.947	770	100	2.20	894
Inlet 2 Run 3	746	1.09	813	100	2.50	933
Outlet Run 1	433	0.337	146	200	1.27	137
Outlet Run 2	821	0.0738	60.6	200	0.333	68.3
Outlet Run 3	619	0.0865	53.5	200	0.396	61.3
M.J. Outlet Run 1	497	0.0759	37.7	200	0.269	33.4
M.J. Outlet Run 2	581	0.0743	43.2	200	0.286	41.5
M.J. Outlet Run 3	497	0.181	90.0	2.00	0.00600	74.6
Tank 1 Run 1	--	1.22E+05	--	1.00*	13.1	1.31E+05
Tank 1 Run 2	--	8.59E+04	--	1.00*	13.0	1.30E+05
Tank 1 Run 3	--	1.08E+05	--	1.00*	12.6	1.26E+05
Tank 2 Run 1	--	1.15E+05	--	1.00*	12.7	1.27E+05
Tank 2 Run 2	--	1.22E+05	--	1.00*	12.5	1.25E+05
Tank 2 Run 3	--	1.14E+05	--	1.00*	12.4	1.24E+05
Tank 3 Run 1	--	1.23E+05	--	1.00*	12.3	1.23E+05
Tank 3 Run 2	--	1.23E+05	--	1.00*	12.6	1.26E+05
Tank 3 Run 3	--	1.20E+05	--	1.00*	12.5	1.25E+05
Detection Limit		0.0015			0.006	

ND : Non–detectable; less than detection limit
* : Sample was diluted 100 times with deionized water before taken for digestion

For Inlet– , Outlet–, M.J.– Samples :

Total Cr(VI), ug = Cr(VI), ug/mL * Total Volume, mL
Total Cr, ug = (Total Cr, ug/mL * Diluted Vol. (50.00 mL) / Vol.(mL) Taken for Digestion) * Total Volume, mL

For Tank– Samples :
Total Cr, ug = Total Cr, ug/mL * Diluted Vol.(100.00 mL) *100

RTI Project No. : 4848-02L

Samples : QC for Impinger Samples
Company : Advanced Systems Technology (P.O. No. : 0074-003-91 and 0004-101-92)
Analyte : Cr(VI) and Total Cr
Methods of Analysis : Ion Chromatography / Post Column Reaction for Cr(VI); ICP for Total Cr
Samples Received : 12-23-92
Report Date : 2-14-92; Revised 9-2-92

Calibration Check Sample

Sample	Cr(VI) ug/mL Measured	Cr(VI) ug/mL Expected	Total Cr Measured	Total Cr Expected
QC	1.98	2.00	2.00	2.00
QC	2.01	2.00	1.99	2.00
QC	5.00	5.40	1.91	2.00

Results of Blank, Duplicate, and Spike Analysis

Sample	Cr(VI) ug/mL Measured	Spike Cr(VI) ug/mL Measured	Spike Cr(VI) ug/mL Expected	Spike Cr(VI) % Recovery	Tot. Cr ug/mL Measured	Tot. Cr ug/mL Expected	Tot. Cr % Recovery
RTI DIW Blk	ND	--	--	--	--	--	--
Inlet 1 Run 1	6.64	--	--	--	--	--	--
Inlet 2 Run 1	3.60	--	--	--	--	--	--
Inlet 1 Run 2 Spk	--	4.93	5.00	98.6	--	--	--
Outlet Run 3 Spk	--	2.67	2.50	107	ND	--	--
Reagent Blk	--	--	--	--	0.00570	--	--
Inlet 1 Run 1 Dup	--	--	--	--	13.4	--	--
Inlet 2 Run 1 Dup	--	--	--	--	7.08	--	--
SRM (WP481)	--	--	--	--	0.0556	0.0522	107
SRM (WP481) Dup	--	--	--	--	0.0509	0.0522	97.5

MOISTURE LABORATORY DATA

Client: US EPA Source: Precision Engr.

Date: 12/17-19/91 Sample Personnel: T. Yarock

Date: 1/92 Recovery Personnel: J. Parker

Inlet #1

		Run # 1	Run # 2	Run # 3	Run #
Impinger					
Final Impinger Volume	(ml)	220	220	220	
Initial Impinger Volume	(ml)	200	200	200	
Net Increase	(g)	20	20	20	
Silica Gel					
Final Weight	(g)	252.82	234.70	240.95	
Initial Weight	(g)	200	200	200	
Weight Change	(g)	52.82	34.70	40.95	
TOTAL WEIGHT					
Silica Gel Wt.	(g)	52.82	34.70	40.95	
Impinger Weight	(g)	20	20	20	
Weight Increase	(g)	72.82	54.70	60.95	

MOISTURE LABORATORY DATA

Client: U.S EPA Source: Precission Engr.

Date: 12/17-19/91 Sample Personnel: T. Yarock

Date: 1/92 Recovery Personnel: J. Parker

Inlet #2

		Run # 1	Run # 2	Run # 3	Run #
Impinger					
Final Impinger Volume	(ml)	210.0	220.0	210.0	
Initial Impinger Volume	(ml)	200	200	200	
Net Increase	(g)	10.0	20.0	10.0	
Silica Gel					
Final Weight	(g)	243.03	210.30	234.85	
Initial Weight	(g)	200	200	200	
Weight Change	(g)	43.03	10.30	34.85	
TOTAL WEIGHT					
Silica Gel Wt.	(g)	43.03	10.30	34.85	
Impinger Weight	(g)	10.0	20.0	10.0	
Weight Increase	(g)	53.03	30.30	43.85	

MOISTURE LABORATORY DATA

Client: U.S EPA Source: Precision Engr.

Date: 12/17-19/91 Sample Personnel: T. Yarosh

Date: 1/92 Recovery Personnel: J. Parker

Outlet

		Run # 1	Run # 2	Run # 3	Run # ____
Impinger					
Final Impinger Volume	(ml)	225.0	220.0	210.0	
Initial Impinger Volume	(ml)	200.0	200.0	200.0	
Net Increase	(g)	25.0	20.0	10.0	
Silica Gel					
Final Weight	(g)	252.00	233.50	236.85	
Initial Weight	(g)	200.00	200.00	200.00	
Weight Change	(g)	52.00	33.50	36.85	
TOTAL WEIGHT					
Silica Gel Wt.	(g)	52.00	33.50	36.85	
Impinger Weight	(g)	25.0	20.0	10.0	
Weight Increase	(g)	77.00	53.50	46.85	

Chain of Custody

Team Leader: Debra McKill for Tom Yarosh

Samples US EPA / Precision Instruments

	Run 1:	Run 2:	Run 3:
Inlet 1	✓	✓	✓
Inlet 2	✓	✓	✓
Outlet	✓	✓	✓
Mason Jar Outlet	✓	✓	✓
Tank 1	✓	✓	✓
Tank 2	✓	✓	✓
Tank 3	✓	✓	✓

Analysis Instructions:

Please analyze for total chrome and hexavalent chrome as previously tested.

Sample levels clearly marked? yes / no

Visible Sample loss? yes / no

Containers Damaged? yes / no

Received By: _____

Date: _____

1627 Peachtree Street, N.E. • Suite 222 • Atlanta, Georgia 30309 • (404) 876-3632

APPENDIX E

ON-SITE COLORIMETRIC ANALYSIS FOR HEXAVALENT CHROMIUM

Mead

COMPOSITION

Chromium Testing for EPA

Michele Knox, Env. Eng.

100 sheets • 200 pages
9¾ x 7½ in/24.7 x 19.0 cm
wide ruled • 09910

© 1987—The Mead Corporation, Dayton, Ohio 45463 U.S.A.

E-2

0 43100 09910

Client: U.S. EPA/PRECISION ENGINEERING, INC.
Test Date: December 17-19, 1991
Analyst: M. L. Knox

Source: MESH PAD MIST ELIMINATOR

Analysis Date: December 17-19, 191

ON-SITE COLORIMETRIC ANALYSIS FOR HEXAVALENT CHROMIUM[a]

SAMPLE	TOTAL VOLUME (ml)	Cr-VI (μg/ml)	TOTAL Cr-VI (μg)
Inlet No. 1, Run 1	500	5.7250	2,862.5
Inlet No. 1, Run 2	900	0.8260	743.4
Inlet No. 1, Run 3	800	1.060	848.0
Inlet No. 2, Run 1	500	3.0350	1,517.5
Inlet No. 2, Run 2	900	0.8980	808.2
Inlet No. 2, Run 3	910	0.8560	779.0
Outlet, Run 1	500	0.2460	123.0
Outlet, Run 2	900	0.0420	37.8
Outlet, Run 3	800	0.0629	50.3
Sample Train Blank	500	0.00002	0.010
Mason Jar, Run 1	600	0.640	38.4
Mason Jar, Run 2	600	0.0500	30.0
Mason Jar, Run 3	600	0.2025	121.5

[a]Samples were analyzed at the end of each testing date, immediately after recovery and labelling.
Total Cr-VI (μg) = Cr-VI (μg/ml) x Total Volume (ml)

Standards Procedure

1. Dilute stock solution from 10 ml to 100 ml for Cr reagent (Cr=5ug/ml).
2. Add 0, 1, 2, 5, and 10 ml of Cr reagent to 100 ml volumetric.
3. Add approx 80 ml distilled water.
4. Adjust pH to approx 2.5 with 4 drops of sulfuric acid.
5. Add 2 ml biphenylcarbazide solution.
6. Dilute to 100 ml and let stand 10 min.
7. Measure absorbance.

Sample Preparation

1a. Stir (or shake) sample container.
1b. Take 50 ml of reagent blank, 0.1 sodium bicarbonate.
2. Transfer 50 ml to volumetric flask.
3. Add water to make approx 80 ml volume.
4. Adjust pH to 2 +- 0.5.
5. Add diphenylcarbazide, 2 ml.
6. Dilute to volume.
7. Let stand 10 min.
8. Measure absorbance.

Hexavalent Chromium Analysis Dec. 10, 1991
by biphenylcarbazide method
Calibration Curve

Std's	conc	Abs
.00		0
.05 µg/ml		.036
.10		.072
.25		.185
.50		.303

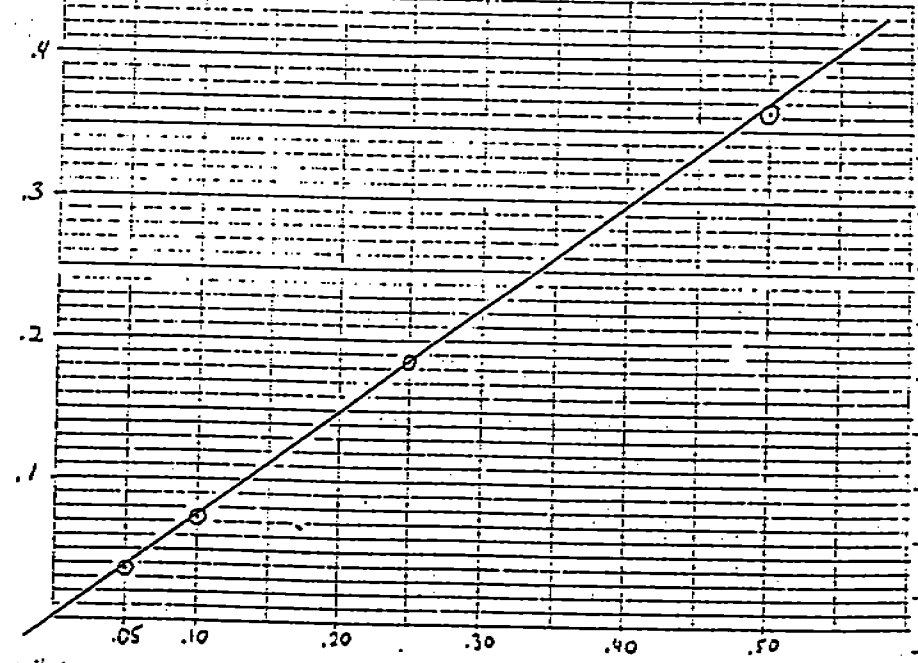

Concentration 1ml = .05 µg

12/10/91

Diluted stock solution ($K_2Cr_2O_7$) 10 ml → 100 ml (curve: Spyke Cr)

made standards

0, 1, 2, 5, 10 ml 20 → 100 ml vol.

add ~ 80 ml water

add ~ 4 drops 10% H_2SO_4

pH adjusted to ~2.5

add 2 ml bi Ph carbazide sol'n vol → 100 ml

let stand 10 min.

read absorbance

12/17

can calibrate wavelength (λ) scan blank & standard & measure difference.

greatest difference is the correct λ

do on method of additions

Precision Engineering, Seattle 12/12

EPA test site Cr Plating Plant

⇒ diluted Cr stock 10 ml (grad pipet) → 100 ml vol.

washed small sample vials (5).

washed std vials [illegible] (7)

washed 2 advanced sample graduat. (5)

acid rinsed pipets [illegible] std solns [illegible] rinsed w/ std soln

put 0 1 2 5 10 20 ml std soln into vs

added water to 100 ml

adj pH to 2 drops 0.5 N H_2SO_4 pH = 2.5

1 ml test 21 drops

di $PbCrO_4$ is orange make more

~ ½ tsp in 9 ml water

		(10 ml sample)
50 ml Sample Train BLK	pH →	2.5
20 ml Inlet 1		2.4
20 ml Inlet 2		2.5
50 ml Outlet Top		2.5
50 ml Outlet Front		2.5

Run #1

	Known Conc	Abs	Inst ~~calc~~ conc				
µg/ml	0	.002	0				
	.05	.043	.05				
	.10	.083	.098				
	.25	.209	.247				
	.50	.440	.520				
	1.0	.830	.980	Inst Fit Conc	Dil Time Fit	Final	mg
	ScpTrBlk	.003					
	OdlEtEl	.029	.035	.03	12/20 .06	12/20 .036	
	OdlEtOr	.105	.123	.128	100/20 .256	100/20 .128	
	Inld #2	.510	.604	.610	10/20 3.05	10/20 1.53	
	Inld #1	~~1.25~~	1.125	1.15	10/20 5.75	10/20 2.88	
		.960					

Dec. 17, 1991

Conc	Abs	mg/ml
.05	.038	

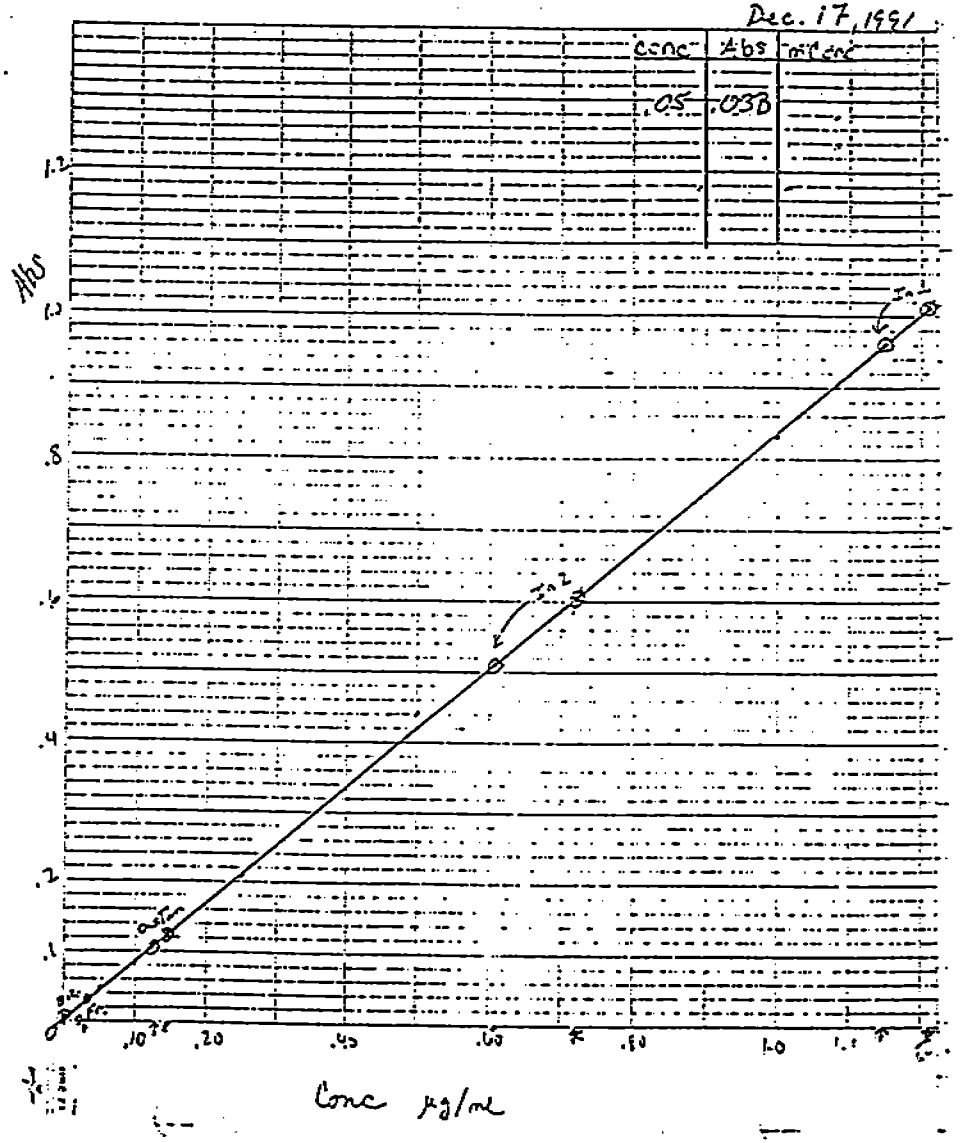

all samples 50ml → 100ml dilution
Total vol. sample train 900ml

Run #2 Dec 18 1991

Known Conc.	Abs	Read Conc			
0	.011	.001			
.05	.047	.050			
.10	.093	.101			
.25	.221	.241			
.50	.442	.582			
1.00	.875	.950			
				Total	mg Total
Out Fac	.028	.032	.03	.06	.054
Out Tow	.025	.027	0.02	.04	.036
Inlet 2	.396	.434	0.45	.90	.81
Inlet 1	.365	.397	0.40	.80	.72

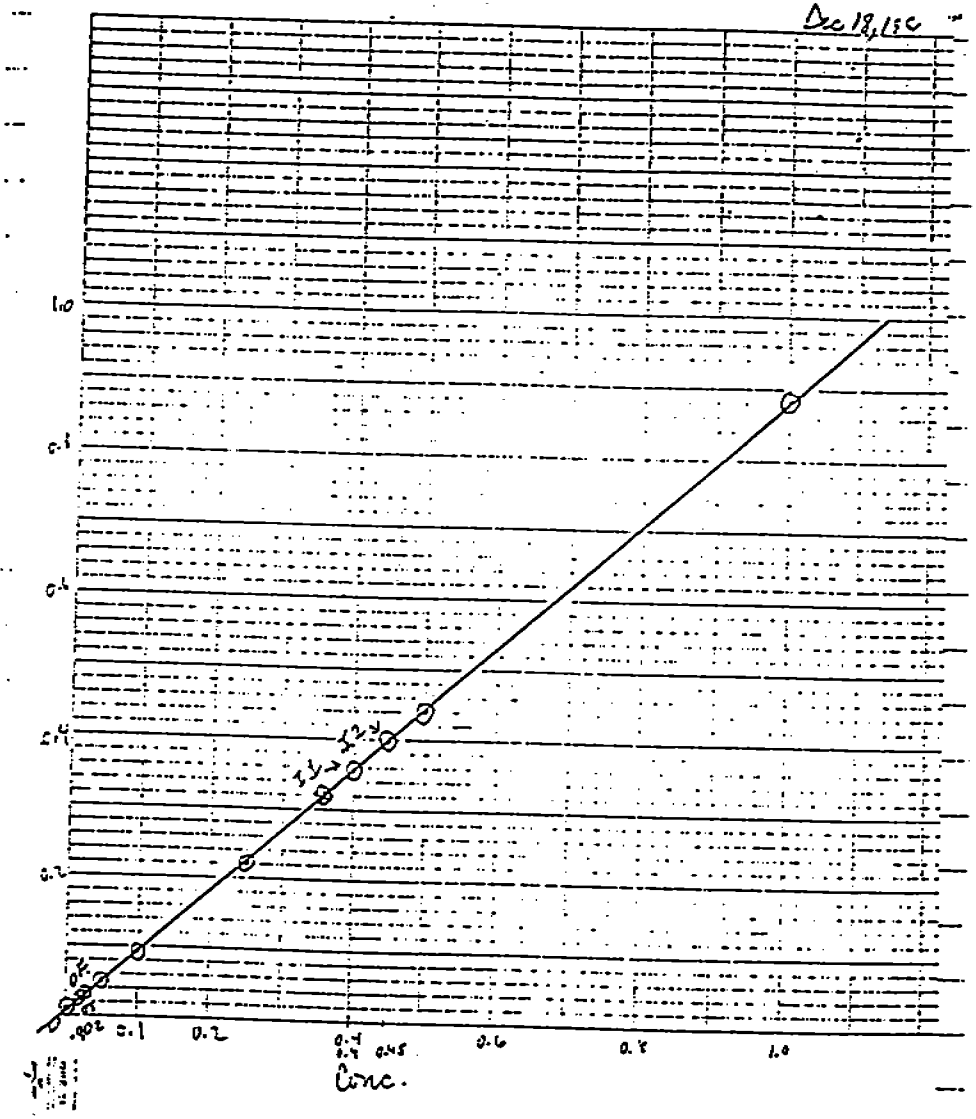
Dec 18, 150
1.0
0.8
0.6
0.4
0.2
.002
0.1
0.2
0.4
0.45
0.6
0.8
1.0
Conc.

Samples

Out F 80 ml → 100 ml (600 ml Total vol)
Out T 70 ml → 100 (800 ml)
In 1 20 ml → 800 ml
In 2 ~~20~~ ml 50 ml 910 ml

In 2 Out T did not turn purple
1st time so added then.

Run #3 Dec. 19, 1991

.006 mg/cu per amp hr

Conc	Abs.	neat conc.	sample conc.		
0	.002	0			
.05	.046	.05			
.10	.091	.099			
.25	.220	.237			
.50	.406	.440			
1.00	.806	.865		mg/l	mg
Out F	.138	.149 · 100/20	.17	.2125	.128
Out T	.094	.098 · 100/20	.05	.071	.057
Inlet 1	.176	.191 · 100/20	.21	1.05	.84
Inlet 2	.351	.377 · 100/20	.43	.86	.78

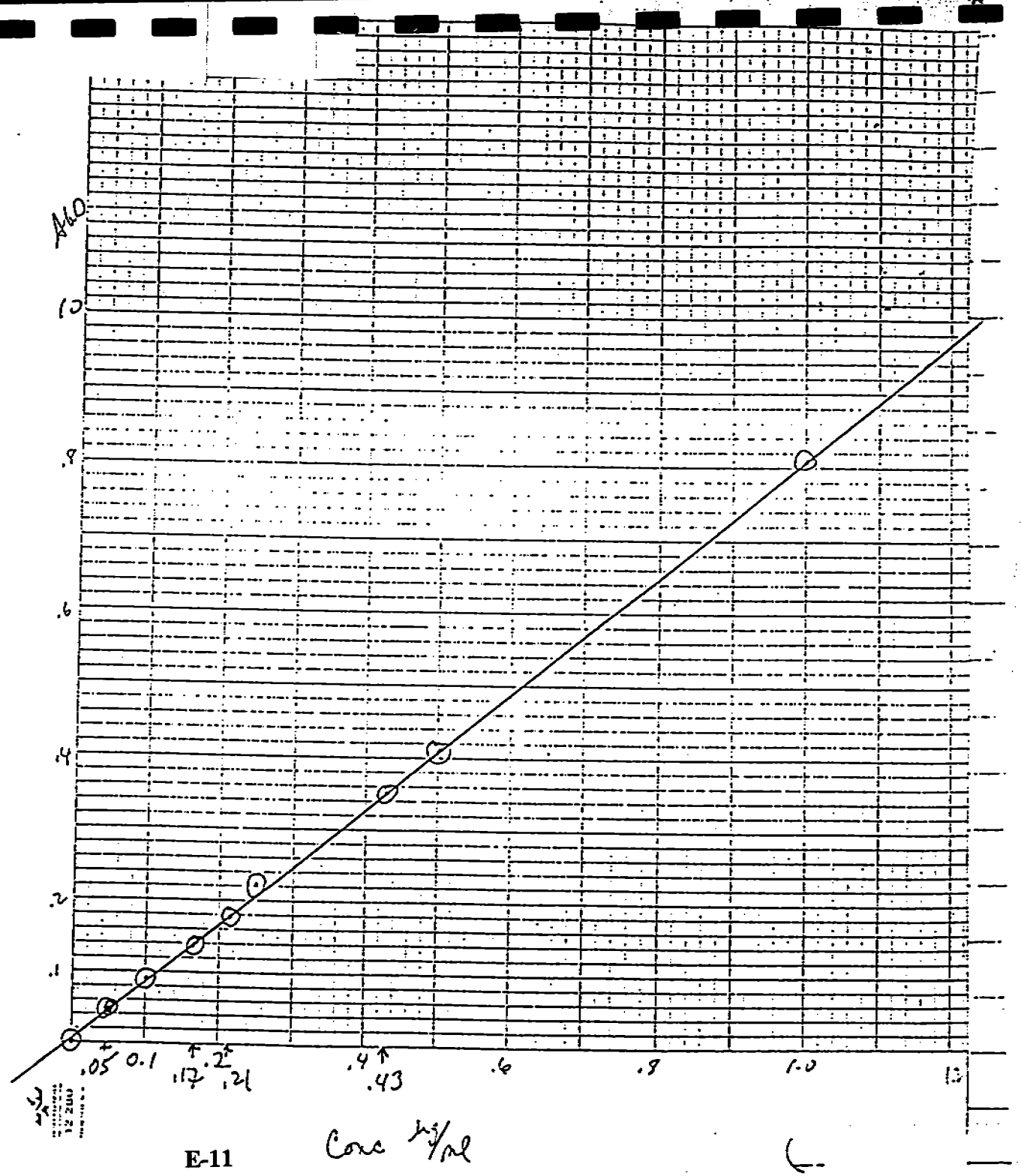
AUC
1.0
.8
.6
.4
.2
.1
.05
0.1
.17
.2
.21
.4
.43
.6
.8
1.0
1.2
Conc µg/ml

SAMPLE CALCULATIONS

	CALC CONC	ALIQUOT (ml)	SMPL VOL (ml)	MASS CR (mg)
RUN #1				
SMPL BLK	0.001	50	500	0.0009
OUTLET FR	0.032	50	600	0.0383
OUTLET TM	0.123	50	500	0.1228
INLET 1	1.145	20	500	2.8622
INLET 2	0.607	20	500	1.5174
RUN #2				
OUTLET FR	0.025	50	600	0.0296
OUTLET TM	0.021	50	900	0.0383
INLET 1	0.413	50	900	0.7431
INLET 2	0.449	50	900	0.8074
RUN #3				
OUTLET FR	0.162	80	600	0.1213
OUTLET TM	0.044	70	800	0.0503
INLET 1	0.212	20	800	0.8470
INLET 2	0.428	50	910	0.7795

RUN #1

STD	ABS	CALC CONC	CALC ERR
0	-0.002	-0.005	
0.05	0.043	0.049	-0.026
0.1	0.083	0.097	-0.035
0.25	0.209	0.247	-0.011
0.5	0.44	0.523	0.047
1	0.83	0.989	-0.011
SMPL BLK	0.003	0.001	
OUTLET FR	0.029	0.032	
OUTLET TM	0.105	0.123	
INLET 1	0.96	1.145	
INLET 2	0.51	0.607	

Regression Output:	
Constant	0.002268
Std Err of Y Est	0.011069
R Squared	0.999033
No. of Observation	6
Degrees of Freedom	4
X Coefficient(s)	0.836521
Std Err of Coef.	0.013015

RUN #2

STD	ABS	CALC CONC	CALC ERR
0	0.011	0.005	
0.05	0.047	0.047	-0.068
0.1	0.093	0.100	-0.004
0.25	0.221	0.247	-0.012
0.5	0.442	0.502	0.003
1	0.875	1.000	0.000
OUTLET FR	0.028	0.025	
OUTLET TM	0.025	0.021	
INLET 1	0.365	0.413	
INLET 2	0.396	0.449	

Regression Output:	
Constant	0.006547
Std Err of Y Est	0.003055
R Squared	0.999932
No. of Observation	6
Degrees of Freedom	4
X Coefficient(s)	0.868272
Std Err of Coef.	0.003592

RUN #3

STD	ABS	CALC CONC	CALC ERR
0	0.002	-0.009	
0.05	0.046	0.047	-0.070
0.1	0.091	0.103	0.028
0.25	0.22	0.264	0.057
0.5	0.406	0.497	-0.006
1	0.806	0.998	-0.002
OUTLET FR	0.138	0.162	
OUTLET TM	0.044	0.044	
INLET 1	0.178	0.212	
INLET 2	0.351	0.428	

Regression Output:	
Constant	0.008828
Std Err of Y Est	0.007048
R Squared	0.99957
No. of Observation	6
Degrees of Freedom	4
X Coefficient(s)	0.798963
Std Err of Coef.	0.008298

APPENDIX F

SAMPLE CALCULATIONS

EPA AIR SAMPLING EQUATIONS

1. Dry Gas Volume at STP $(V_{m_{(std)}})$

$$V_{m_{(std)}} = 17.64\ V_m Y \left[\frac{P_{bar}\left(\frac{\Delta H}{13.6}\right)}{T_m} \right]$$

Where

$V_{m_{(std)}}$ = ft^3 corrected for standard temperature and pressure;

V_m = ft^3 as measured by the gas meter - not corrected for standard temperature and pressure;

Y = dry gas meter calibration factor (deminsionless)

P_{bar} = inches of Hg

ΔH = inches of H_2O

T_m = °R (°F + 460)

2. Concentration as grains/dscf

$$\text{grains/dscf} = \frac{mg\ (1.543 \times 10^{-2})}{V_{m_{(std)}}}$$

Where

$V_{m_{(std)}}$ = ft^3 corrected for standard temperature and pressure

Conversions:

$\frac{\mu g}{1000}$ = mg; mg x 1.543×10^{-2} grains/mg = grains

3. Concentration as mg/m^3

$$mg/m^3 = \frac{0.035314(ug)}{V_{m_{(std)}}}$$

Where

$V_{m_{(std)}}$ = ft^3 corrected for standard temperature and pressure

4. Molecular Weight of Stack Gas, Dry Basis (M_d)

a) $M_d = 0.440\ (\%CO_2) + 0.320\ (\%\ O_2) + 0.28\ (\%\ N_2 + \%CO)$

b) $\%N_2 = 100 - \%CO_2 - \%\ O_2$

Where

$\%\ CO_2 = 0.7$

$\%\ O_2 = 21$

$\%\ CO = 0$

5. Volume of Water Vapor $(V_{w_{(std)}})$

$$V_{w_{(std)}} = 0.04707 ft^3/ml(V_{lc})$$

Where

$V_{w_{(std)}}$ = *ft^3 corrected for standard temp and pressure;*

V_{lc} = *ml of liquid collected in impingers and silica gel*

6. Moisture Content as a Percent (B_{ws})

$$B_{ws} = (V_{w_{(std)}} \ / \ V_{m_{(std)}} + V_{w_{(std)}}) \ x \ 100$$

Where

B_{ws} = *percent,*

$V_{w_{(std)}}$ = *ft^3;*

$V_{m_{(std)}}$ = *ft^3*

7. Molecular Weight of Stack Gas, Wet Basis (M_s)

a) $M_s = M_d (1-B_{ws}) + 18.0 (B_{ws})$

Where

M_s = lb/lb-mole;

M_d = lb/lb-mole;

B_{ws} = dimensionless

b) Mole Fraction of Dry Gas (M_d)

$M_d = 100 - B_{ws}/100$

Where

M_d = dimensionless;

B_{ws} = dimensionless

8. Average Stack Gas Velocity (V_s)

$$V_s = K_p \, C_p \left(\sqrt{\Delta_p}\right)_{(avg)} \left(\frac{\sqrt{T_{s_{(avg)}}}}{P_s M_s}\right)$$

Where

$$K_p = 85.49 \; ft/\sec \left[\frac{(lb/lb\text{-}mole)(in.\ Hg)}{(^\circ R)(in.H_2O)}\right]^{1/2}$$

V_s = ft/sec;

C_p = dimensionless;

Δp = inches of H_2O;

T_s = °R (°F + 460);

P_s = inches of Hg;

M_s = lb/lb-mole

9. Actual Cubic Feet Per Minute (ACFM)

ACFM = V_s (60 sec/min) (A)

Where

V_s = ft/sec;

A = ft^2

10. Average Stack Gas Dry Volumetric Flow Rate (Q_{std})

$$Q_{std} = 60\ (1-B_{ws})V_s\ A\ \frac{T_{std}}{T_{s_{(avg)}}}\ \frac{P_s}{P_{std}}$$

Where

$Q_{std} = ft^3/\text{min};$

$B_{ws} = dimensionless;$

$V_s = ft/\text{sec};$

$A = ft^2$

$T_{std} = {}^\circ R({}^\circ F + 460);$

$T_{s_{(avg)}} = {}^\circ R({}^\circ F + 460);$

$P_s = inches\ of\ Hg;$

$P_{std} = inches\ of\ Hg$

11. Emission Rate in Pounds Per Hour (lbs/hr)

$$lbs/hr = (Kg/hr)(2.2046)$$

12. Emission Rate in Kilograms per hour (Kg/hr)

$$kg/hr = (dscfm)_{STACK}\left(\frac{mg}{dscm}\right)(1.699 \times 10^{-6})$$

13. Percent Isokinetic Variation (% I)

$$I = 0.09450\ T_s\ V_{m_{(std)}} / P_s\ V_s\ A_n\ \theta\ (1 - B_{ws})$$

Where

I = Percent of isokinetic sampling;

$T_s = {}^\circ R$;

$V_{m_{(std)}} = ft^3$ corrected for standard temperature and pressure;

P_s = inches of Hg;

V_s = ft/sec;

$A_n = ft^2$;

θ = minute;

B_{ws} = dimensionless

14. Concentration as lbs/dscf

$$lbs/dscf = \frac{mg(2.2\ x\ 10^{-6})}{V_{m_{(std)}}}$$

Where

$V_{m_{(std)}} = ft^3$ *corrected for standard temperature and pressure*

Conversion: $mg(2.2x10^{-6} lbs/mg) = lbs$

APPENDIX G

DRAFT METHOD DETERMINATION OF HEXAVALENT CHROMIUM EMISSIONS FROM DECORATIVE AND HARD CHROME ELECTROPLATING

Method __ - Determination of Hexavalent Chromium Emissions from Decorative and Hard Chrome Electroplating

1. Applicability and Principle

1.1 Applicability. This method applies to the determination of hexavalent chromium (Cr^{+6}) in emissions from decorative and hard chrome electroplating operations.

1.2 Principle. Emissions are collected from the source by use of Method 5 (Appendix A, 40 CFR Part 60), with the filter omitted. The first and second impingers are charged with 0.1N sodium hydroxide. The collected samples remain in an alkaline solution until analysis, and are analyzed for Cr^{+6} by the diphenylcarbazide colorimetric method.

2. Range, Sensitivity, Precision, and Interferences

2.1 Range. A straight line response curve can be obtained in the range 5 μg Cr^{+6}/100 ml to 100 μg Cr^{+6}/100 ml. For a minimum analytical accuracy of ±10 percent, the lower limit of the range is 10 μg/100 ml. The upper limit can be extended by appropriate dilution.

2.2 Sensitivity. A minimum detection limit of 1 μg Cr^{+6}/100 ml has been observed.

2.3 Precision. To be determined.

2.4 Interference. Molybdenum, mercury and vanadium react with diphenylcarbazide to form a color; however, approximately 20 mg of these elements can be present in a sample without creating a problem. Iron produces a yellow color, but this effect is not measured photometrically at 540 nm.

3. Apparatus

3.1 Sampling Train. Same as Method 5, Section 2.1, but omit filter, and use quartz probe tip in place of stainless steel.

3.2 Sample Recovery. Same as Method 5, Section 2.2, but use 0.1N NaOH in place of acetone.

3.3 Analysis. The following equipment is needed.

3.3.1 Beakers. Borosilicate, 250-ml, with watchglass covers.

3.3.2 Volumetric Flasks. 100-ml and other appropriate volumes.

3.3.3 Pipettes. Assorted sizes, as needed.

3.3.4 Spectrophotometer. To measure absorbance at 540 nm.

4. Reagents

Unless otherwise indicated, all reagents shall conform to the specifications established by the Committee on Analytical Reagents of the American Chemical Society. Where such specifications are not available, use the best available grade.

4.1 Sampling.

4.1.1 0.1N NaOH.

4.2 Sample Recovery.

4.2.2 0.1N NaOH.

4.3 Analysis. The following reagents are required.

4.3.1 Water. Deionized distilled, meeting American Society for Testing and Materials (ASTM) specifications for type 2 reagent - ASTM Test Method D 1193-77 (incorporated by reference - see § 61.18).

4.3.2 Potassium Dichromate Stock Solution. Dissolve 141.4 mg of analytical reagent grade $K_2Cr_2O_7$ in water, and dilute to 1 liter (1 ml = 50 μg Cr^{+6}).

4.3.3 Potassium Dichromate Standard Solution. Dilute 10.00 ml $K_2Cr_2O_7$ stock solution to 100 ml (1 ml = 5 μg Cr^{+6}) with water.

4.3.4 Sulfuric Acid, 10 Percent (v/v). Dilute 10 ml H_2SO_4 to 100 ml in water.

4.3.5 Diphenylcarbazide Solution. Dissolve 250 mg of 1, 5-diphenylcarbizide in 50 ml acetone. Store in a brown bottle. Discard when the solution becomes discolored.

5. Procedure

5.1 Sampling. Same as Method 5, Section 4.1, except omit the filter and filter holder, and place 100 ml of 0.1N NaOH in each of the first two impingers.

5.2 Sample Recovery. Measure the volume and place all liquid in the first, second, and third impingers in a labelled sample container (Container Number 1). Use 200 ml of 0.1N NaOH to rinse the probe, three impingers, and connecting glassware. Place this wash in the same container. Place the silica gel from the fourth impinger in Container Number 3.

5.3 Preservation. Analyze all samples within _____ of collection.

5.4 Reagent Blank Preparation. Place 400 ml of 0.1N NaOH in a labelled sample container (Container Number 2).

5.5 Silica Gel Weighing. Weigh the spent silica gel (Container Number 3) or silica gel plus impinger to the nearest 0.5 g using a balance. This step may be conducted in the field.

5.6 Analysis.

5.6.1 Color Development and Measurement. After stirring the sample in Container Number 1, transfer a 50-ml or smaller measured aliquot to a 100 ml volumetric flask and add sufficient water to bring the volume to approximately

80 ml. Adjust the pH to 2 ± 0.5 with 10 percent H_2SO_4, add 2.0 ml of diphenylcarbazide solution, and dilute to volume with water. Allow the solution to stand about 10 minutes for color development. For each set of samples analyzed, treat an identical aliquot of reagent blank solution from Container Number 2 in the same way. Transfer a portion of the sample to a 1-cm absorption cell, and measure the absorbance at the optimum wavelength (Section 6.2.1). Measure and subtract the reagent blank absorbance reading, if any, to obtain a net reading. If the absorbance of the sample exceeds the absorbance of the 100 μg Cr^{+6} standard as determined in Section 6.2.2, dilute the sample and the reagent blank with equal volumes of water.

5.6.2 Check for Matrix Effects on the Cr^{+6} Results. Since the analysis for Cr^{+6} by colorimetry is sensitive to the chemical composition of the sample (matrix effects), the analyst shall check at least one sample from each source using the method of additions as follows:

Obtain two equal volume aliquots of the same sample solution. The aliquots should each contain between 30 and 50 μg of Cr^{+6}. Now treat both the spiked and unspiked sample aliquots as described in Section 5.6.1.

Next, calculate the Cr^{+6} mass C_1, in μg in the aliquot of the unspiked sample solution by using the following equation:

$$C_1 = C_s \frac{A_1}{A_t - A_1} \qquad \text{Eq. -1}$$

where:

C_s = Cr^{+6} in the standard solution, μg.
A_1 = Absorbance of the unspiked sample solution.
A_t = Absorbance of the spiked sample solution.

Volume corrections will not be required since the solutions as analyzed have been made to the same final volume. If the results of the method of

additions procedure used on the single source sample do not agree to within 10 percent of the value obtained by the routine spectrophotometric analysis, then reanalyze all samples from the source using this method of additions procedure.

6. Calibration

6.1 Sampling Train. Perform all of the calibrations described in Method 5, Section 5.

6.2 Spectrophotometer Calibration.

6.2.1 Optimum Wavelength Determination. Calibrate the wavelength scale of the spectrophotometer every 6 months. The calibration may be accomplished by using an energy source with an intense line emission such as a mercury lamp, or by using a series of glass filters spanning the measuring range of the spectrophotometer. Calibration materials are available commercially and from the National Bureau of Standards. Specific details on the use of such materials are normally supplied by the vendor; general information about calibration techniques can be obtained from general reference books on analytical chemistry. The wavelength scale of the spectrophotometer shall read correctly with ±5 nm at all calibration points; otherwise, repair and recalibrate the spectrophotometer. Once the wavelength scale of the spectrophotometer is in proper calibration, use 540 nm as the optimum wavelength for the measurement of the absorbance of the standards and samples.

Alternatively, a scanning procedure may be employed to determine the proper measuring wavelength. If the instrument is a double-beam spectrophotometer, scan the spectrum between 530 and 550 nm using the 50 μg Cr^{+6} standard solution (Section 4.3.4) in the sample cell and a blank solution in the reference cell. If a peak does not occur, the spectrophotometer is

malfunctioning. When a peak is obtained within the 530 to 550 nm range, record and use the wavelength at which this peak occurs as the optimum wavelength for the measurement of absorbance of both the standards and the samples. For single-beam spectrophotometer, follow the scanning procedure described above, except scan the blank and standard solutions separately. For this instrument, the optimum wavelength is the wavelength at which the maximum difference in absorbance between the standard and the blank occurs.

6.2.2 Spectrophotometer Calibration. Alternative calibration procedures are allowed, provided acceptable accuracy and precision can be demonstrated. Add 0.0 ml, 1 ml, 2 ml, 5 ml, 10 ml, 15 ml, and 20 ml of the working standard solution (1 ml = 5 μg Cr^{+6}) to a series of seven 100-ml volumetric flasks. Dilute each to mark with water. Analyze these calibration standards as in Section 5.6.1. Repeat this calibration procedure on each day that samples are analyzed. Calculate the spectrophotometer calibration factor K_c as follows:

$$K_c = 5 \frac{A_1 + 2A_2 + 5A_3 + 10A_4 + 15A_5 + 20A_6}{A_1^2 + A_2^2 + A_3^2 + A_4^2 + A_5^2 + A_6^2} \qquad \text{Eq.-2}$$

where:

K_c = Calibration factor.

A_1 = Absorbance of the 5 μg Cr^{+6}/100 ml standard.

A_2 = Absorbance of the 10 μg Cr^{+6}/100 ml standard.

A_3 = Absorbance of the 25 μg Cr^{+6}/100 ml standard.

A_4 = Absorbance of the 50 μg Cr^{+6}/100 ml standard.

A_5 = Absorbance of the 75 μg Cr^{+6}/100 ml standard.

A_6 = Absorbance of the 100 μg Cr^{+6}/100 ml standard.

6.2.2.1 Spectrophotometer Calibration Quality Control. Multiply the absorbance value obtained for each standard by the K_c factor (least squares slope) to determine the distance each calibration point lies from the theoretical calibration line. These calculated concentration values shall not differ from the actual concentrations (i.e., 5, 10, 25, 50, 75, and 100 μg Cr^{+6}/100 ml) by more than __ percent for five of the six standards.

7. Emission Calculations

Carry out the calculations, retaining at least one extra decimal figure beyond that of the acquired data. Round off figures after final calculations.

7.1 Total Cr^{+6} in Sample. Calculate m, the total μg Cr^{+6} in each sample, as follows:

$$m = \frac{V_{sl} K_c AF}{V_a} \qquad \text{Eq. -3}$$

where:

V_{sl} = Volume in ml of total sample.

A = Absorbance of sample.

F = Dilution factor (required only if sample dilution was needed to to reduce the absorbance into the range of calibration).

V_a = Volume in ml of aliquot analyzed.

7.2 Average Dry Gas Meter Temperature and Average Orifice Pressure Drop. Same as Method 5, Section 6.2.

7.3 Dry Gas Volume, Volume of Water Vapor, Moisture Content. Same as Method 5, Sections 6.3, 6.4, and 6.5, respectively.

7.4 Cr^{+6} Emission Concentration. Calculate c_s (g/dscm), the Cr^{+6} concentration in the stack gas, dry basis, corrected to standard conditions, as follows:

$$c_s = (10^{-6}\ g/\mu g)[m/V_{m(std)}] \qquad \text{Eq. -4}$$

7.5 Isokinetic Variation, Acceptable Results. Same as Method 5, Sections 6.11 and 6.12, respectively.

8. Bibliography

8.1 Test Methods for Evaluating Solid Waste. U.S. Environmental Protection Agency. SW-846, 2nd Edition. July 1982.

8.2 Cox, X.B., R.W. Linton, and F.E. Butler. Determination of Chromium Speciation in Environmental Particles - A Multitechnique Study of Ferrochrome Smelter Dust. Accepted for publication in Environmental Science and Technology.

8.3 Same as in Bibliography of Method 5, Citations 2 to 5 and 7.

APPENDIX H

AMPERE-HOUR CALCULATIONS

Ampere-Hour Calculations
Test Run No. 1
Tank No. 1A

Date: December 17, 1991

Inlet - A	Inlet - B	Outlet
Start time: 10:20	Start time: 10:20	Start time: 10:20
Stop time: 16:40	Stop time: 16:40	Stop time: 16:40

Time, 24-hr clock		Time interval, min		Current, amperes	Ampere-hours	
Inlet	Outlet	Inlet	Outlet		Inlet	Outlet
10:20	10:20					
10:45	10:45	25	25	--	--	--
11:15	11:15	30	30	4,100	2,050	2,050
11:45	11:45	30	30	4,000	2,000	2,000
12:15	12:15	30	30	4,000	2,000	2,000
12:45	12:45	30	30	4,100	2,050	2,050
13:15	13:15	30	30	4,350	2,175	2,175
13:20	13:20	5	5	4,500	375	375
Subtotal		180	180		10,650	10,650
13:40	13:40					
13:45	13:45	5	5	4,700	392	392
14:30	14:30	45	45	4,700	3,525	3,525
15:00	15:00	30	30	4,800	2,400	2,400
15:30	15:30	30	30	4,900	2,450	2,450
16:00	16:00	30	30	4,000	2,000	2,000
16:30	16:30	30	30	4,100	2,050	2,050
16:40	16:40	10	10	4,000	667	667
Subtotal		180	180		13,484	13,484
Total		360	360		24,130	24,130

Ampere-Hour Calculations
Test Run No. 1
Tank No. 1B

Date: December 17, 1991

Inlet - A	Inlet - B	Outlet
Start time: 10:20	Start time: 10:20	Start time: 10:20
Stop time: 16:40	Stop time: 16:40	Stop time: 16:40

Time, 24-hr clock		Time interval, min		Current, amperes	Ampere-hours	
Inlet	Outlet	Inlet	Outlet		Inlet	Outlet
10:20	10:20					
10:45	10:45	25	25	--	--	--
11:15	11:15	30	30	4,000	2,000	2,000
11:45	11:45	30	30	4,000	2,000	2,000
12:15	12:15	30	30	4,000	2,000	2,000
12:45	12:45	30	30	3,800	1,900	1,900
13:15	13:15	30	30	3,500	1,750	1,750
13:20	13:20	5	5	3,400	283	283
Subtotal		180	180		9,933	9,933
13:40	13:40					
13:45	13:45	5	5	3,300	275	275
14:30	14:30	45	45	3,300	2,475	2,475
15:00	15:00	30	30	3,200	1,600	1,600
15:30	15:30	30	30	3,100	1,550	1,550
16:00	16:00	30	30	4,000	2,000	2,000
16:30	16:30	30	30	3,800	1,900	1,900
16:40	16:40	10	10	4,000	667	667
Subtotal		180	180		10,467	10,467
Total		360	360		20,400	20,400

Ampere-Hour Calculations
Test Run No. 1
Tank No. 2A

Date: December 17, 1991

Inlet - A	Inlet - B	Outlet
Start time: 10:20	Start time: 10:20	Start time: 10:20
Stop time: 16:40	Stop time: 16:40	Stop time: 16:40

Time, 24-hr clock		Time interval, min		Current, amperes	Ampere-hours	
Inlet	Outlet	Inlet	Outlet		Inlet	Outlet
10:20	10:20					
10:45	10:45	25	25	2,350	979	979
11:15	11:15	30	30	2,250	1,125	1,125
11:45	11:45	30	30	2,250	1,125	1,125
12:15	12:15	30	30	2,300	1,150	1,150
12:45	12:45	30	30	2,350	1,175	1,175
13:15	13:15	30	30	2,350	1,175	1,175
13:20	13:20	5	5	2,350	196	196
Subtotal		180	180		6,925	6,925
13:40	13:40					
13:45	13:45	5	5	2,350	196	196
14:30	14:30	45	45	2,350	1,763	1,763
15:00	15:00	30	30	2,350	1,175	1,175
15:30	15:30	30	30	2,350	1,175	1,175
16:00	16:00	30	30	2,300	1,150	1,150
16:30	16:30	30	30	2,300	1,150	1,150
16:40	16:40	10	10	2,300	383	383
Subtotal		180	180		6,992	6,992
Total		360	360		13,920	13,920

Ampere-Hour Calculations
Test Run No. 1
Tank No. 2B

Date: December 17, 1991

Inlet - A	Inlet - B	Outlet
Start time: 10:20	Start time: 10:20	Start time: 10:20
Stop time: 16:10	Stop time: 16:10	Stop time: 16:10

Time, 24-hr clock		Time interval, min		Current, amperes	Ampere-hours	
Inlet	Outlet	Inlet	Outlet		Inlet	Outlet
10:20	10:20					
10:45	10:45	25	25	1,450	604	604
11:15	11:15	30	30	1,400	700	700
11:45	11:45	30	30	1,400	700	700
12:15	12:15	30	30	1,400	700	700
12:45	12:45	30	30	1,400	700	700
13:15	13:15	30	30	1,450	725	725
13:20	13:20	5	5	1,450	121	121
Subtotal		180	180		4,250	4,250
13:40	13:40					
13:45	13:45	5	5	1,450	121	121
14:30	14:30	45	45	1,450	1,088	1,088
15:00	15:00	30	30	1,450	725	725
15:30	15:30	30	30	1,450	725	725
16:00	16:00	30	30	1,450	725	725
16:30	16:30	30	30	1,400	700	700
16:40	16:40	10	10	1,400	233	233
Subtotal		180	180		4,317	4,317
Total		360	360		8,570	8,570

Ampere-Hour Calculations
Test Run No. 1
Tank No. 7B

Date: December 17, 1991

Inlet - A	Inlet - B	Outlet
Start time: 10:20	Start time: 10:20	Start time: 10:20
Stop time: 16:10	Stop time: 16:10	Stop time: 16:10

Time, 24-hr clock		Time interval, min		Current, amperes	Ampere-hours	
Inlet	Outlet	Inlet	Outlet		Inlet	Outlet
10:20	10:20					
10:45	10:45	25	25	7,000	2,917	2,917
11:15	11:15	30	30	6,900	3,450	3,450
11:45	11:45	30	30	6,800	3,400	3,400
12:15	12:15	30	30	7,000	3,500	3,500
12:45	12:45	30	30	7,000	3,500	3,500
13:15	13:15	30	30	7,000	3,500	3,500
13:20	13:20	5	5	7,000	583	583
Subtotal		180	180		20,850	20,850
13:40	13:40					
13:45	13:45	5	5	7,000	583	583
14:30	14:30	45	45	7,100	5,325	5,325
15:00	15:00	30	30	7,000	3,500	3,500
15:30	15:30	30	30	7,100	3,550	3,550
16:00	16:00	30	30	7,100	3,550	3,550
16:30	16:30	30	30	7,000	3,500	3,500
16:40	16:40	10	10	7,000	1,167	1,167
Subtotal		180	180		21,175	21,175
Total		360	360		42,025	42,025

Ampere-Hour Calculations
Test Run No. 2
Tank No. 1A

Date: December 18, 1991

Inlet - A	Inlet - B	Outlet
Start time: 10:00	Start time: 10:00	Start time: 10:00
Stop time: 14:15	Stop time: 14:15	Stop time: 14:15

Time, 24-hr clock		Time interval, min		Current, amperes	Ampere-hours	
Inlet	Outlet	Inlet	Outlet		Inlet	Outlet
10:00	10:00					
10:30	10:30	30	30	3,400	1,700	1,700
11:00	11:00	30	30	3,400	1,700	1,700
11:30	11:30	30	30	3,400	1,700	1,700
12:00	12:00	30	30	3,500	1,750	1,750
Subtotal		120	120		6,850	6,850
12:15	12:15					
12:30	12:30	15	15	3,700	925	925
13:00	13:00	30	30	3,700	1,850	1,850
13:30	13:30	30	30	3,700	1,850	1,850
14:00	14:00	30	30	3,650	1,825	1,825
14:15	14:15	15	15	3,700	925	925
Subtotal		120	120		7,375	7,375
Total		240	240		14,225	14,225

Ampere-Hour Calculations
Test Run No. 2
Tank No. 1B

Date: December 18, 1991

Inlet - A	Inlet - B	Outlet
Start time: 10:00	Start time: 10:00	Start time: 10:00
Stop time: 14:15	Stop time: 14:15	Stop time: 14:15

Time, 24-hr clock		Time interval, min		Current, amperes	Ampere-hours	
Inlet	Outlet	Inlet	Outlet		Inlet	Outlet
10:00	10:00					
10:30	10:30	30	30	3,500	1,750	1,750
11:00	11:00	30	30	3,500	1,750	1,750
11:30	11:30	30	30	3,500	1,750	1,750
12:00	12:00	30	30	3,500	1,750	1,750
Subtotal		120	120		7,000	7,000
12:15	12:15					
12:30	12:30	15	15	3,300	825	825
13:00	13:00	30	30	3,300	1,650	1,650
13:30	13:30	30	30	3,400	1,700	1,700
14:00	14:00	30	30	3,300	1,650	1,650
14:15	14:15	15	15	3,400	850	850
Subtotal		120	120		6,675	6,675
Total		240	240		13,675	13,675

Ampere-Hour Calculations
Test Run No. 2
Tank No. 2A

Date: December 18, 1991

Inlet - A
Start time: 10:00
Stop time: 14:15

Inlet - B
Start time: 10:00
Stop time: 14:15

Outlet
Start time: 10:00
Stop time: 14:15

Time, 24-hr clock		Time interval, min		Current, amperes	Ampere-hours	
Inlet	Outlet	Inlet	Outlet		Inlet	Outlet
10:00	10:00					
10:30	10:30	30	30	1,650	825	825
11:00	11:00	30	30	1,650	825	825
11:30	11:30	30	30	1,650	825	825
12:00	12:00	30	30	1,650	825	825
Subtotal		120	120		3,300	3,300
12:15	12:15					
12:30	12:30	15	15	1,700	425	425
13:00	13:00	30	30	1,700	850	850
13:30	13:30	30	30	1,700	850	850
14:00	14:00	30	30	1,700	850	850
14:15	14:15	15	15	1,700	425	425
Subtotal		120	120		3,400	3,400
Total		240	240		6,700	6,700

Ampere-Hour Calculations
Test Run No. 2
Tank No. 2B

Date: December 18, 1991

Inlet - A	Inlet - B	Outlet
Start time: 10:00	Start time: 10:00	Start time: 10:00
Stop time: 14:15	Stop time: 14:15	Stop time: 14:15

Time, 24-hr clock		Time interval, min		Current, amperes	Ampere-hours	
Inlet	Outlet	Inlet	Outlet		Inlet	Outlet
10:00	10:00					
10:30	10:30	30	30	1,850	925	925
11:00	11:00	30	30	1,850	925	925
11:30	11:30	30	30	1,850	925	925
12:00	12:00	30	30	1,850	925	925
Subtotal		120	120		3,700	3,700
12:15	12:15					
12:30	12:30	15	15	1,850	463	463
13:00	13:00	30	30	1,850	925	925
13:30	13:30	30	30	1,850	925	925
14:00	14:00	30	30	1,850	925	925
14:15	14:15	15	15	1,850	463	463
Subtotal		120	120		3,700	3,700
Total		240	240		7,400	7,400

Ampere-Hour Calculations
Test Run No. 2
Tank No. 7A

Date: December 18, 1991

Inlet - A	Inlet - B	Outlet
Start time: 10:00	Start time: 10:00	Start time: 10:00
Stop time: 14:15	Stop time: 14:15	Stop time: 14:15

Time, 24-hr clock		Time interval, min		Current, amperes	Ampere-hours	
Inlet	Outlet	Inlet	Outlet		Inlet	Outlet
10:00 10:25	10:00 10:25	25	25	1,300	542	542
Subtotal		25	25		542	542
Total		25	25		540	540

Ampere-Hour Calculations
Test Run No. 2
Tank No. 7B

Date: December 18, 1991

Inlet - A	Inlet - B	Outlet
Start time: 10:00	Start time: 10:00	Start time: 10:00
Stop time: 14:15	Stop time: 14:15	Stop time: 14:15

Time, 24-hr clock		Time interval, min		Current, amperes	Ampere-hours	
Inlet	Outlet	Inlet	Outlet		Inlet	Outlet
10:00	10:00					
10:30	10:30	30	30	5,900	2,950	2,950
11:00	11:00	30	30	7,100	3,550	3,550
11:30	11:30	30	30	7,300	3,650	3,650
12:00	12:00	30	30	7,200	3,600	3,600
Subtotal		120	120		13,750	13,750
12:15	12:15					
12:30	12:30	15	15	7,200	1,800	1,800
13:00	13:00	30	30	7,200	3,600	3,600
13:30	13:30	30	30	7,200	3,600	3,600
14:00	14:00	30	30	7,200	3,600	3,600
14:15	14:15	15	15	7,200	1,800	1,800
Subtotal		120	120		14,400	14,400
Total		240	240		28,150	28,150

Ampere-Hour Calculations
Test Run No. 3
Tank No. 1A

Date: December 19, 1991

Inlet - A	Inlet - B	Outlet
Start time: 9:45	Start time: 9:45	Start time: 9:45
Stop time: 13:50	Stop time: 13:50	Stop time: 13:50

Time, 24-hr clock		Time interval, min		Current, amperes	Ampere-hours	
Inlet	Outlet	Inlet	Outlet		Inlet	Outlet
9:45	9:45					
10:00	10:00	15	15	2,800	700	700
10:30	10:30	30	30	2,900	1,450	1,450
11:00	11:00	30	30	2,900	1,450	1,450
11:30	11:30	30	30	2,850	1,425	1,425
11:45	11:45	15	15	3,000	750	750
Subtotal		120	120		5,775	5,775
11:50	11:50					
12:00	12:00	10	10	3,000	500	500
12:30	12:30	30	30	3,000	1,500	1,500
13:00	13:00	30	30	3,000	1,500	1,500
13:30	13:30	30	30	3,000	1,500	1,500
13:50	13:50	20	20	3,000	1,000	1,000
Subtotal		120	120		6,000	6,000
Total		240	240		11,775	11,775

Ampere-Hour Calculations
Test Run No. 3
Tank No. 1B

Date: December 19, 1991

Inlet - A	Inlet - B	Outlet
Start time: 9:45	Start time: 9:45	Start time: 9:45
Stop time: 13:50	Stop time: 13:50	Stop time: 13:50

Time, 24-hr clock		Time interval, min		Current, amperes	Ampere-hours	
Inlet	Outlet	Inlet	Outlet		Inlet	Outlet
9:45	9:45					
10:00	10:00	15	15	2,750	688	688
10:30	10:30	30	30	2,700	1,350	1,350
11:00	11:00	30	30	2,800	1,400	1,400
11:30	11:30	30	30	2,900	1,450	1,450
11:45	11:45	15	15	2,800	700	700
Subtotal		120	120		5,588	5,588
11:50	11:50					
12:00	12:00	10	10	2,800	467	467
12:30	12:30	30	30	2,800	1,400	1,400
13:00	13:00	30	30	2,800	1,400	1,400
13:30	13:30	30	30	2,800	1,400	1,400
13:50	13:50	20	20	2,800	933	933
Subtotal		120	120		5,600	5,600
Total		240	240		11,190	11,190

Ampere-Hour Calculations
Test Run No. 3
Tank No. 2A

Date: December 19, 1991

Inlet - A	Inlet - B	Outlet
Start time: 9:45	Start time: 9:45	Start time: 9:45
Stop time: 13:50	Stop time: 13:50	Stop time: 13:50

Time, 24-hr clock		Time interval, min		Current, amperes	Ampere-hours	
Inlet	Outlet	Inlet	Outlet		Inlet	Outlet
9:45	9:45					
10:00	10:00	15	15	1,950	488	488
10:30	10:30	30	30	1,950	975	975
11:00	11:00	30	30	2,000	1,000	1,000
11:30	11:30	30	30	2,050	1,025	1,025
11:45	11:45	15	15	2,050	513	513
Subtotal		120	120		4,000	4,000
11:50	11:50					
12:00	12:00	10	10	2,050	342	342
12:30	12:30	30	30	2,050	1,025	1,025
13:00	13:00	30	30	2,050	1,025	1,025
13:30	13:30	30	30	2,050	1,025	1,025
13:50	13:50	20	20	2,100	700	700
Subtotal		120	120		4,117	4,117
Total		240	240		8,120	8,120

Ampere-Hour Calculations
Test Run No. 3
Tank No. 2B

Date: December 19, 1991

Inlet - A	Inlet - B	Outlet
Start time: 9:45	Start time: 9:45	Start time: 9:45
Stop time: 13:50	Stop time: 13:50	Stop time: 13:50

Time, 24-hr clock		Time interval, min		Current, amperes	Ampere-hours	
Inlet	Outlet	Inlet	Outlet		Inlet	Outlet
9:45	9:45					
10:00	10:00	15	15	1,650	413	413
10:30	10:30	30	30	1,650	825	825
11:00	11:00	30	30	1,700	850	850
11:30	11:30	30	30	1,750	875	875
11:45	11:45	15	15	1,700	425	425
Subtotal		120	120		3,388	3,388
11:50	11:50					
12:00	12:00	10	10	1,750	292	292
12:30	12:30	30	30	1,750	875	875
13:00	13:00	30	30	1,750	875	875
13:30	13:30	30	30	1,750	875	875
13:50	13:50	20	20	1,750	583	583
Subtotal		120	120		3,500	3,500
Total		240	240		6,890	6,890

Ampere-Hour Calculations
Test Run No. 3
Tank No. 7A

Date: December 19, 1991

Inlet - A	Inlet - B	Outlet
Start time: 9:45	Start time: 9:45	Start time: 9:45
Stop time: 13:50	Stop time: 13:50	Stop time: 13:50

Time, 24-hr clock		Time interval, min		Current, amperes	Ampere-hours	
Inlet	Outlet	Inlet	Outlet		Inlet	Outlet
9:45	9:45					
10:00	10:00	15	15	1,000	250	250
10:30	10:30	30	30	1,000	500	500
11:00	11:00	30	30	1,000	500	500
11:30	11:30	30	30	1,000	500	500
11:45	11:45	15	15	1,000	250	250
Subtotal		120	120		2,000	2,000
11:50	11:50					
12:00	12:00	10	10	1,000	167	167
12:30	12:30	30	30	1,000	500	500
13:00	13:00	30	30	1,000	500	500
13:30	13:30	30	30	1,000	500	500
13:50	13:50	20	20	1,000	333	333
Subtotal		120	120		2,000	2,000
Total		240	240		4,000	4,000

Ampere-Hour Calculations
Test Run No. 3
Tank No. 7B

Date: December 19, 1991

Inlet - A	Inlet - B	Outlet
Start time: 9:45	Start time: 9:45	Start time: 9:45
Stop time: 13:50	Stop time: 13:50	Stop time: 13:50

Time, 24-hr clock		Time interval, min		Current, amperes	Ampere-hours	
Inlet	Outlet	Inlet	Outlet		Inlet	Outlet
9:45	9:45					
10:00	10:00	15	15	7,300	1,825	1,825
10:30	10:30	30	30	7,200	3,600	3,600
11:00	11:00	30	30	7,200	3,600	3,600
11:30	11:30	30	30	7,200	3,600	3,600
11:45	11:45	15	15	7,100	1,775	1,775
Subtotal		120	120		14,400	14,400
11:50	11:50					
12:00	12:00	10	10	7,200	1,200	1,200
12:30	12:30	30	30	7,200	3,600	3,600
13:00	13:00	30	30	7,200	3,600	3,600
13:30	13:30	30	30	7,100	3,550	3,550
13:50	13:50	20	20	7,200	2,400	2,400
Subtotal		120	120		14,350	14,350
Total		240	240		28,750	28,750

PROCESS DATA SHEET
Precision Engineering, Inc.
Seattle, Washington

Test Run No. 1 Date: 12/17/91

Time	Tank No.	Operating current, amperes	Operating voltage, volts	Operating temperature, °F	Notes
10:20	1A	--	--	--	Started testing @ 10:20
	1B	--	--	--	Grab samples taken from
	2A	2,350	7.6	140	each plating tank
	2B	1,450	7.6	140	Ampere-hour readings
	7A	--	--	--	Tank No. Ah
	7B	--	--	--	1A 112,404
					1B 859,347
					2A 119,143
					2B 152,690
					7A 1,962,806
					7B 1,837,121
10:30	1A	--	--	--	
	1B	--	--	--	
	2A	2,350	7.6	140	
	2B	1,450	7.6	140	
	7A	--	--	--	
	7B	7,000	8.0	140	
10:45	1A	4,100	7.2	140	
	1B	4,000	7.2	140	
	2A	2,250	7.6	140	
	2B	1,400	7.6	140	
	7A	--	--	--	
	7B	6,900	8.0	140	
11:15	1A	4,000	7.2	140	
	1B	4,000	7.0	140	
	2A	2,250	7.6	140	
	2B	1,400	7.6	140	
	7A	--	--	--	
	7B	6,800	8.0	140	
11:45	1A	4,000	7.0	140	
	1B	4,000	7.0	140	
	2A	2,300	7.6	140	
	2B	1,400	7.6	140	
	7A	--	--	--	
	7B	7,000	8.0	140	

PROCESS DATA SHEET
Precision Engineering, Inc.
Seattle, Washington

Test Run No. 1 Date: 12/17/91

Time	Tank No.	Operating current, amperes	Operating voltage, volts	Operating temperature, °F	Notes
12:15	1A	4,100	7.0	140	
	1B	3,800	7.0	140	
	2A	2,350	7.6	140	
	2B	1,400	7.6	140	
	7A	--	--	--	
	7B	7,000	8.0	140	
12:45	1A	4,350	7.0	140	
	1B	3,500	7.0	140	
	2A	2,350	7.6	140	
	2B	1,450	7.6	140	
	7A	--	--	--	
	7B	7,000	8.0	140	
13:15	1A	4,500	7.0	140	Stopped testing @ 13:20
	1B	3,400	7.0	140	Port change
	2A	2,350	7.6	140	
	2B	1,450	7.6	140	Tank No. / Ah
	7A	--	--	--	1A 124,295
	7B	7,000	8.0	140	1B 869,665
					2A 123,815
					2B 160,024
					7A 1,962,806
					7B 1,858,743
					Grab sample taken from each plating tank
13:30	1A	4,500	7.0	140	Started testing @ 13:40
	1B	3,400	7.0	140	
	2A	2,350	7.6	140	
	2B	1,450	7.6	140	
	7A	--	--	--	
	7B	7,000	8.0	140	
13:45	1A	4,700	7.0	140	
	1B	3,300	7.0	140	
	2A	2,350	7.6	140	
	2B	1,450	7.7	140	
	7A	--	--	--	
	7B	7,100	8.0	140	

PROCESS DATA SHEET
Precision Engineering, Inc.
Seattle, Washington

Test Run No. 1 Date: 12/17/91

Time	Tank No.	Operating current, amperes	Operating voltage, volts	Operating temperature, °F	Notes
14:30	1A	4,800	7.0	140	
	1B	3,200	7.0	140	
	2A	2,350	7.6	140	
	2B	1,450	7.6	140	
	7A	--	--	--	
	7B	7,000	8.0	140	
15:00	1A	4,900	7.2	140	
	1B	3,100	7.0	140	
	2A	2,350	7.6	140	
	2B	1,450	7.6	140	
	7A	--	--	--	
	7B	7,100	8.0	140	
15:30	1A	4,000	7.0	140	
	1B	4,000	7.0	140	
	2A	2,350	7.6	140	
	2B	1,450	7.6	140	
	7A	--	--	--	
	7B	7,100	8.0	140	
16:00	1A	4,100	7.0	140	
	1B	3,800	7.0	140	
	2A	2,300	7.6	140	
	2B	1,400	7.6	140	
	7A	--	--	--	
	7B	7,000	7.8	140	
16:30	1A	4,000	7.0	140	Stopped testing @ 16:40
	1B	4,000	7.0	140	
	2A	2,300	7.4	140	Grab samples taken from each plating tank
	2B	1,400	7.6	140	
	7A	--	--	--	
	7B	7,000	7.8	140	Tank No. / Ah
					1A 138,147
					1B 880,980
					2A 128,430
					2B 167,300
					7A 1,962,806
					7B 1,881,330

PROCESS DATA SHEET
Precision Engineering, Inc.
Seattle, Washington

Test Run No. 2 Date: 12/18/91

Time	Tank No.	Operating current, amperes	Operating voltage, volts	Operating temperature, °F	Notes
10:00	1A	3,400	6.4	140	Started testing @10:00
	1B	3,500	6.4	140	
	2A	1,650	7.3	140	Grab samples taken from each plating tank
	2B	1,850	7.4	140	
	7A	1,300	6.6	140	
	7B	5,900	6.4	140	Tank No. / Ah: 1A 188,574; 1B 936,635; 2A 130,235; 2B 189,901; 7A 1,977,933; 7B 1,978,892
10:30	1A	3,400	6.4	140	Rectifier No. 7A turned off at 10:25
	1B	3,500	6.4	140	
	2A	1,650	7.2	140	
	2B	1,850	7.4	140	
	7A	--	--	140	
	7B	7,100	7.4	140	
11:00	1A	3,500	6.4	140	
	1B	3,400	6.3	140	
	2A	1,650	7.2	140	
	2B	1,850	7.4	140	
	7A	--	--	--	
	7B	7,300	6.4	140	
11:30	1A	3,500	6.4	140	
	1B	3,500	6.4	140	
	2A	1,650	7.2	140	
	2B	1,850	7.4	140	
	7A	--	--	--	
	7B	7,200	6.4	140	
12:00	1A	3,500	6.4	140	Stopped testing @ 12:00
	1B	3,500	6.4	140	
	2A	1,700	7.3	140	Grab samples taken from each plating tank
	2B	1,850	7.4	140	
	7A	--	--	--	
	7B	7,300	6.4	140	Tank No. / Ah: 1A 195,853; 1B 944,306; 2A 134,325; 2B 193,527; 7A 1,978,747; 7B 1,993,740

PROCESS DATA SHEET
Precision Engineering, Inc.
Seattle, Washington

Test Run No. 2 Date: 12/18/91

Time	Tank No.	Operating current, amperes	Operating voltage, volts	Operating temperature, °F	Notes
12:30	1A	3,700	6.4	140	Started testing @ 12:15
	1B	3,300	6.3	140	
	2A	1,700	7.2	140	Tank No. / Ah
	2B	1,850	7.4	140	1A 197,647
	7A	–	–	–	1B 946,021
	7B	7,200	6.4	140	2A 135,285
					2B 194,381
					7A 1,978,747
					7B 1,997,395
13:00	1A	3,700	6.4	140	
	1B	3,300	6.3	140	
	2A	1,700	7.2	140	
	2B	1,850	7.4	140	
	7A	–	–	–	
	7B	7,200	6.4	140	
13:30	1A	3,700	6.4	140	
	1B	3,400	6.2	140	
	2A	1,700	7.2	140	
	2B	1,850	7.4	140	
	7A	–	–	–	
	7B	7,200	6.4	140	
14:00	1A	3,650	6.4	140	
	1B	3,300	6.2	140	
	2A	1,700	7.2	140	
	2B	1,850	7.4	140	
	7A	–	–	–	
	7B	7,200	6.4	140	
14:15	1A	3,700	6.4	140	Stopped testing @ 14:15
	1B	3,400	6.2	140	Grab samples taken from
	2A	1,700	7.2	140	each plating tank
	2B	1,850	7.4	140	
	7A	–	–	–	Tank No. / Ah
	7B	7,200	7.4	140	1A 204,023
					1B 952,100
					2A 138,697
					2B 197,429
					7A 1,978,747
					7B 2,010,325

PROCESS DATA SHEET
Precision Engineering, Inc.
Seattle, Washington

Test Run No. 3 Date: 12/19/91

Time	Tank No.	Operating current, amperes	Operating voltage, volts	Operating temperature, °F	Notes
9:45	1A	2,800	6.4	140	Started testing @ 9:45
	1B	2,750	6.4	140	
	2A	1,950	7.8	140	Tank No. Ah
	2B	1,650	8.0	140	
	7A	1,000	6.0	140	1A 226,402
	7B	7,300	7.4	140	1B 953,479
					2A 139,700
					2B 206,585
					7A 1,991,302
					7B 2,012,707
10:00	1A	2,900	6.4	140	
	1B	2,700	6.4	140	
	2A	1,950	7.6	140	
	2B	1,650	7.8	140	
	7A	1,000	6.0	140	
	7B	7,200	7.2	140	
10:30	1A	2,900	6.4	140	
	1B	2,800	6.4	140	
	2A	2,000	7.8	140	
	2B	1,700	7.8	140	
	7A	1,000	6.0	140	
	7B	7,200	7.3	140	
11:00	1A	2,850	6.4	140	
	1B	2,900	6.4	140	
	2A	2,050	7.8	140	
	2B	1,750	7.8	140	
	7A	1,000	6.0	140	
	7B	7,200	7.3	140	
11:30	1A	3,000	6.4	140	Stopped testing @ 11:45
	1B	2,800	6.4	140	
	2A	2,050	7.6	140	Grab samples taken from
	2B	1,700	7.8	140	each plating tank
	7A	1,000	6.0	140	
	7B	7,100	7.2	140	Tank No. Ah
					1A 231,430
					1B 958,690
					2A 142,913
					2B 210,270
					7A 1,993,826
					7B 2,025,478

PROCESS DATA SHEET
Precision Engineering, Inc.
Seattle, Washington

Test Run No. 3 Date 12/19/91

Time	Tank No.	Operating current, amperes	Operating voltage, volts	Operating temperature, °F	Notes
12:00	1A	3,000	6.4	140	Started testing @ 11:50
	1B	2,800	6.4	140	
	2A	2,050	7.8	140	Tank No. Ah
	2B	1,750	7.9	140	
	7A	1,000	6.0	140	1A 231,430
	7B	7,200	7.4	140	1B 958,690
					2A 142,913
					2B 210,270
					7A 1,993,826
					7B 2,025,478
12:30	1A	3,000	6.4	140	
	1B	2,800	6.4	140	
	2A	2,050	7.8	140	
	2B	1,750	7.9	140	
	7A	1,000	6.0	140	
	7B	7,200	7.4	140	
13:00	1A	3,000	6.4	140	
	1B	2,800	6.4	140	
	2A	2,050	7.6	140	
	2B	1,750	7.8	140	
	7A	1,000	6.0	140	
	7B	7,200	7.2	140	
13:30	1A	3,000	6.4	140	
	1B	2,800	6.4	140	
	2A	2,100	7.6	140	
	2B	1,750	7.8	140	
	7A	1,000	6.0	140	
	7B	7,200	7.3	140	
13:50	1A	3,250	6.5	140	Stopped testing @ 13:50
	1B	2,600	6.4	140	
	2A	2,050	7.6	140	Grab samples taken from
	2B	1,750	7.8	140	each plating tank
	7A	1,000	6.0	140	
	7B	7,100	7.2	140	Tank No. Ah
					1A 238,048
					1B 965,213
					2A 147,040
					2B 215,037
					7A 1,995,815
					7B 2,042,243

PROCESS LOAD
Precision Engineering, Inc.
Seattle, Washington

Test Run No.	Tank No.	Surface area plated, in.^{2}
1	1 2 7	3,960 1,800 3,571
2	1 2 7	3,960 1,800 5,054
3	1 2 7	2,800 1,800 5,100

APPENDIX I

LABORATORY ANALYSIS PROCEDURE METHOD OF DETERMINATION OF Cr-VI IN ALKALINE SOLUTION

Method for Determination of CrVI in Alkaline Solutions

Sample Receipt, Storage, and Preparation

Immediately following sample receipt, samples are refrigerated until analysis. If sample volumes are unknown, volumes are measured after the ion chromatographic determination. Otherwise samples are ready for direct analysis.

IC Analysis

An Dionex Model 14 equipped with an IonPac, AS7 column, a Dionex visible spectrophotometric detector and a Shimadzu C-R5a Chromatopac Integrator are used to determine the Cr(VI). Hexavalent chromium is chromatographed as divalent $CrO_4^{=}$ anion on the column. After separation, the Cr(VI) reacts with the color reagent, diphenylcarbohydrazide (DPC) and the product is detected by visible spectrometry at 520 nm. The eluent is a mixture of 350 nM ammonium sulphate and 100 mM ammonium hydroxide. The eluent flow is 1.5 mL/min. The post column color reagent is a mixture of 2 mM diphenylcarbohydrazide, 10% methanol and 1 M sulfuric acid. The flow is 0.5 mL/min. The combined flow rate is 2.0 mL/min.

Procedure

1. Preparation of Eluent -- Dissolve 33.0 g of ammonium sulfate in about 500 mL of deionized water. Add 6.5 mL of ammonium hydroxide. Mix well and dilute to one liter in a volumetric flask. Transfer the solution to the eluent bottle.

2. Preparation of Post Column Reagent -- Dissolve 0.5 g of 1,5 diphenylcarbohydrazide in 100 mL of HPLC grade methanol. Add to about 500 mL of water containing 28 mL of 98% sulfuric acid. Dilute with stirring to one liter in a volumetric flask. Transfer the solution to the pressurized reagent container. The solution is stable for several days but should only be prepared as it is used.

3. Preparation of Cr(VI) Standard -- Cr(VI) standards ranging from 5 ppb to 5 ppm are prepared from the stock 1000 ppm Cr(VI) (Fisher). The concentrations of the standards prepared depend on the concentration of the extracted samples.

4. Install the NG1 and AG7 columns. The NG1 guard is placed before the AS7 separator and is the most appropriate guard column for trapping organic present in the environmental samples.

5. Install a 50 µL sample loop on the injection valve if extracts contain high levels of Cr(VI).

6. Set the eluent flow to 1.5 mL/min and the post column reagent flow rate to 0.5 mL/min. The combined flow rate out of the detector waste is 2.0 mL/min. After the flow rates are adjusted, allow the system to equilibrate for about 30 minutes.

7. Load at least 1 mL of sample through the sample port using an appropriate syringe. Inject the sample into the eluent stream and record the chromatogram. The sample peak should elute at about 3 minutes.

   NOTE: If any precipitate in the sample is observed, an Acrodisc prefilter attached to the syringe must be used.

8. The concentration of the unknown is calculated by comparison of the peak areas for the standards and the unknown.

Quality Control

The following procedures are conducted to ensure that the analysis is in control:

(1) A calibration curve verification check sample is run immediately following the calibration. This sample must be prepared from a different manufacturer/source than that of the calibration standards.

(2) A mid-range standard must be run no less frequently than every ten (10) samples. The analysis of this sample must be within 10% of the expected value.

(3) A sample matrix spike must be analyzed to ensure that the sample matrix does not suppress/enhance the Cr(VI) signal. Recovery must be 85% - 115%. Otherwise, the method of standard additions must be performed .

(4) A duplicate injection of 10% of the samples (minimum one per batch if less than 10 samples) is analyzed. If the sample values are 2-10X the limit of detection (LOD), the duplicate % difference should be <30%. If the values are >10X the LOD, then % difference should be <15%.

(5) An analysis blank (Type II water) must be run immediately following calibration. This analysis will determine water purity and/or potential for carryover during the analysis.

APPENDIX J

EQUIPMENT CALIBRATION DATA

ADVANCED SYSTEMS TECHNOLOGY
Meter Box Calibrations

Console Id: AST #1 Date: September 18, 1991
Barometric Pressure: 28.92

Delta P	T	TEST METER Initial Cubic Feet	TEST METER Final Cubic Feet	Total	Temp	DRY GAS METER Initial Cubic Feet	DRY GAS METER Final Cubic Feet	Total	Temp	
0.5	10	623.550	627.620	4.070	77.0	116.200	120.270	4.067	81.0	77.0
					77.0				83.0	81.0
0.7	9	627.620	632.050	4.430	77.0	120.270	124.800	4.526	83.0	81.0
					77.0				85.0	82.0
1	10	632.050	637.850	5.800	77.0	124.800	130.550	5.745	85.0	82.0
					77.0				87.0	83.0
1.5	11	637.850	645.450	7.600	77.0	130.550	138.320	7.764	87.0	83.0
					77.0				89.0	84.0
2	12	645.450	655.100	9.650	77.0	138.320	148.000	9.672	89.0	84.0
					77.0				91.0	85.0

	MCF	%	DEL H	%
	0.9915	0.0	1.803	-1.27
	1.0090	1.8	1.783	-2.36
	0.9749	-1.6	1.832	0.31
	1.0014	1.0	1.831	0.25
	0.9786	-1.3	1.882	3.06
Average	0.991		1.826	
Correct	0.991		1.826	
error %	0.0		0.0	

ADVANCED SYSTEMS TECHNOLOGY
Meter Box Calibrations

Console Id: AST #2 Date: December 13, 1991
Barometric Pressure: 29.90

Delta P	T	TEST METER Initial Cubic Feet	Final Cubic Feet	Total	Temp	Dry Gas Meter Initial Cubic Feet	Final Cubic Feet	Total	Temp	
0.5	12.	340.400	345.555	5.155	78.0	242.278	247.325	5.043	78.0	76.0
					78.0				81.0	78.0
1	12.	345.555	352.648	7.093	78.0	247.325	254.428	7.097	82.0	79.0
					78.0				87.0	81.0
1.5	10.	352.648	359.605	6.957	78.0	254.428	261.424	6.990	84.0	81.0
					78.0				91.0	84.0
2	9.5	359.605	366.873	7.268	78.0	261.424	268.735	7.305	89.0	84.0
					78.0				94.0	86.0

	MCF	%	DEL H	%
	0.9766	-0.1	1.834	-5.55
	0.9903	1.3	1.855	-4.46
	0.9883	1.0	1.981	2.00
	0.9815	0.4	2.003	3.17
Average	0.985		1.890	
Correct	0.978		1.942	
error %	0.7		-2.7	

ADVANCED SYSTEMS TECHNOLOGY
Meter Box Calibrations

Console Id: AST #3 Date: September 19, 1991
Barometric Pressure: 28.99

Delta P	T	TEST METER Initial Cubic Feet	Final	Total	Temp	DRY GAS METER Initial Cubic Feet	Final	Total	Temp	
0.5	12.	200.646	205.671	5.025	84.0	339.018	344.013	4.991	95.0	92.0
					84.0				96.0	92.0
0.7	10.	205.671	210.795	5.124	84.0	344.013	349.014	4.997	87.0	82.0
					84.0				87.0	82.0
1	9	210.795	215.756	4.961	84.0	349.014	354.014	4.996	87.0	82.0
					84.0				89.0	84.0
1.5	10.	215.756	223.064	7.308	84.0	354.014	361.276	7.256	89.0	84.0
					84.0				90.0	85.0
2	6.4	223.064	228.150	5.086	84.0	361.276	366.235	4.955	90.0	85.0
					84.0				91.0	86.0

	MCF	%	DEL H	%
	0.9745	-0.5	1.952	0.26
	0.9725	-0.7	1.936	-0.55
	1.0017	2.3	1.941	-0.29
	0.9837	0.5	1.889	-2.96
	0.9623	-1.7	2.014	3.46
Average	0.979		1.947	
Correct	0.979		1.947	
error %	0.0		0.0	

TEMPERATURE SENSOR CALIBRATION

Date: Nov. 15, 1991

Ambient Temperature: 76 Baro. Presure: 30.01

Calibrator: J. Parker Reference: Hg. in glass 0 - 110 C

Location	Source	Reference (C)	Reference (F)	Thermocouple (F)	Difference
Consule #1					
Meter Box IN	Ambient	0.0	76.0	74.1	-0.35%
	Cold	0.0	32.0	32.5	0.10%
	Hot	0.0	250.0	243.0	-0.99%
Meter Box OUT	Ambient	0.0	76.0	74.5	-0.28%
	Cold	0.0	32.0	32.3	0.06%
	Hot	0.0	250.0	247.0	-0.42%
Consule #2					
Meter Box IN	Ambient	0.0	76.0	73.9	-0.39%
	Cold	0.0	32.0	32.6	0.12%
	Hot	0.0	250.0	236.0	-1.97%
Meter Box OUT	Ambient	0.0	76.0	74.3	-0.32%
	Cold	0.0	32.0	32.6	0.12%
	Hot	0.0	250.0	235.0	-2.11%
Consule #3					
Meter Box IN	Ambient	0.0	76.0	73.7	-0.43%
	Cold	0.0	32.0	32.4	0.08%
	Hot	0.0	250.0	223.0	-3.80%
Meter Box OUT	Ambient	0.0	76.0	72.3	-0.69%
	Cold	0.0	32.0	32.6	0.12%
	Hot	0.0	250.0	249.0	-0.14%
Impinger A Case 1	Ambient	0.0	76.0	74.3	-0.32%
	Cold	0.0	32.0	32.5	0.10%
	Hot	0.0	250.0	237.0	-1.83%
Impinger B Case 2	Ambient	0.0	76.0	76.1	0.02%
	Cold	0.0	32.0	32.3	0.06%
	Hot	0.0	250.0	237.0	-1.83%
Hot Box 1	Ambient	0.0	76.0	74.1	-0.35%
	Cold	0.0	32.0	32.5	0.10%
	Hot	0.0	250.0	247.0	-0.42%
Hot Box 2	Ambient	0.0	76.0	75.1	-0.17%
	Cold	0.0	32.0	32.6	0.12%
	Hot	0.0	250.0	246.0	-0.56%

TEMPERATURE SENSOR CALIBRATION

Date: Nov. 15, 1991 Probe Calibrations

Ambient Temperature: 76 Baro. Presure: 30.0'

Calibrator: T. Yaroch Reference: Hg. in glass 0 - 110 C

Location	Source	Reference (C)	Reference (F)	Thermocouple (F)	Difference
Stack Gas	Ambient	0.0	76.0	72.6	-0.63%
3 Ft.	Cold	0.0	32.0	31.9	-0.02%
#D	Hot	0.0	250.0	249.0	-0.14%
Stack Gas	Ambient	0.0	76.0	74.5	-0.28%
4 Ft.	Cold	0.0	32.0	31.6	-0.08%
#C	Hot	0.0	250.0	252.0	0.28%
Stack Gas	Ambient	0.0	76.0	72.8	-0.60%
4 Ft.	Cold	0.0	32.0	31.5	-0.10%
#F	Hot	0.0	250.0	229.0	-2.96%
Stack Gas	Ambient	0.0	76.0	72.9	-0.58%
5 Ft.	Cold	0.0	32.0	31.5	-0.10%
#E	Hot	0.0	250.0	249.0	-0.14%
Stack Gas	Ambient	0.0	76.0	72.0	-0.75%
5 Ft.	Cold	0.0	32.0	32.1	0.02%
#I	Hot	0.0	250.0	236.0	-1.97%
Stack Gas	Ambient	0.0	76.0	72.0	-0.75%
6 Ft.	Cold	0.0	32.0	31.7	-0.06%
#H	Hot	0.0	250.0	234.0	-2.25%
Stack Gas	Ambient	0.0	76.0	71.6	-0.82%
10 Ft.	Cold	1.2	32.0	32.2	0.04%
#G	Hot	0.0	250.0	267.0	2.39%
	Ambient	0.0	76.0	74.2	-0.34%
	Cold	0.0	32.0	36.4	0.89%
	Hot	0.0	250.0	260.0	1.41%
	Ambient	0.0	32.0	32.0	0.00%
	Cold	0.0	32.0	32.0	0.00%
	Hot	0.0	32.0	32.0	0.00%
	Ambient	0.0	32.0	32.0	0.00%
	Cold	0.0	32.0	32.0	0.00%
	Hot	0.0	32.0	32.0	0.00%

ADVANCED SYSTEMS TECHNOLOGY
Meter Box Calibrations

Console Id: AST #1 Date: January 21, 1992
Barometric Pressure: 30.16

Delta P	T	TEST METER Initial Cubic Feet	Final	Total	Temp		Dry Gas Meter Initial Cubic Feet	Final	Total	Temp	
0.5	13	421.633	426.610	4.977	80.0		327.668	332.669	4.997	80.0	78.0
					80.0					85.0	80.0
1	9	426.610	431.670	5.060	80.0		332.669	337.741	5.068	84.0	80.0
					80.0					90.0	82.0
1.5	7.7	431.670	436.990	5.320	80.0		337.741	342.990	5.245	89.0	82.0
					80.0					93.0	84.0

	MCF	%	DEL H	%
	1.0014	2.1	1.926	1.16
	0.9918	1.1	1.817	-4.59
	0.9697	-1.2	1.907	0.18
Average	0.988		1.883	
Correct	0.981		1.904	
error %	0.7		-1.1	

ADVANCED SYSTEMS TECHNOLOGY
Meter Box Calibrations

Console Id: AST #2

Date: January 16, 1992
Barometric Pressure: 30.27

Delta P	T	TEST METER Initial Cubic Feet	Final	Total	Temp		Dry Gas Meter Initial Cubic Feet	Final	Total	Temp	
0.5	26.	366.975	377.100	10.125	75.0		92.255	102.316	10.053	75.0	75.0
					75.0					79.0	77.0
1	9.5	377.100	382.200	5.100	75.0		102.316	107.489	5.169	78.0	77.0
					75.0					81.0	78.0
2	6.5	382.200	387.321	5.121	75.0		107.489	112.439	4.946	81.0	78.0
					75.0					83.0	78.0

	MCF	%	DEL H	%
	0.9889	1.1	1.958	2.81
	1.0045	2.7	1.917	0.71
	0.9523	-2.6	1.972	3.55
Average	0.982		1.949	
Correct	0.978		1.904	
error %	0.4		2.4	

ADVANCED SYSTEMS TECHNOLOGY
Meter Box Calibrations

Console Id: AST #3 Date: January 16, 1992
Barometric Pressure: 30.27

Delta P	T	TEST METER Initial Cubic Feet	Final	Total	Temp	Dry Gas Meter Initial Cubic Feet	Final	Total	Temp	
0.5	13	387.321	392.600	5.279	75.0	200.167	205.220	5.049	78.0	77.0
					75.0				83.0	79.0
1	9.5	392.600	397.929	5.329	75.0	205.220	210.365	5.141	82.0	79.0
					75.0				87.0	80.0
2	6.5	397.929	403.109	5.180	75.0	210.365	215.468	5.099	87.0	81.0
					75.0				89.0	82.0

	MCF	%	DEL H	%
	0.9477	-3.3	1.887	-0.90
	0.9499	-3.1	1.964	3.13
	0.9621	-1.8	1.888	-0.84
Average	0.953		1.913	
Correct	0.980		1.904	
error %	-2.7		0.5	

APPENDIX K

DETERMINATION OF TOTAL CHROMIUM AND HEXAVALENT CHROMIUM EMISSIONS FROM STATIONARY SOURCES (CARB 425)

State of California
Air Resources Board

Method 425

Determination of Total Chromium and Hexavalent Chromium Emissions from Stationary Sources

Adopted: January 22, 1987

Amended: September 12, 1990

TABLE OF CONTENTS

METHOD 425
DETERMINATION OF TOTAL CHROMIUM AND HEXAVALENT CHROMIUM
EMISSIONS FROM STATIONARY SOURCES

		page
1	APPLICABILITY, PRINCIPLE, AND FIGURES	1
2	RANGE, SENSITIVITY, PRECISION, AND INTERFERENCES	5
3	APPARATUS	7
4	REAGENTS	8
5	SAMPLE COLLECTION, PRESERVATION, AND HANDLING	11
6	PROCEDURES FOR SAMPLE RECOVERY, PREPARATION, AND ANALYSIS	12
7	CALIBRATION, QUALITY CONTROL, AND DATA REPORTING	15
8	REFERENCES	19

METHOD 425
DETERMINATION OF TOTAL CHROMIUM AND HEXAVALENT CHROMIUM EMISSIONS FROM STATIONARY SOURCES

1 APPLICABILITY, PRINCIPLE, AND FIGURES

1. 1 APPLICABILITY

This method applies to the determination of hexavalent chromium (Cr(VI)) and total chromium emissions from stationary sources. Applicability has been demonstrated for the metal finishing and glass industries. Its applicability has not been demonstrated for sources with high particulate mass emission rates.

1. 2 PRINCIPLE

Particulate emissions are collected from the source in an alkaline medium by use of CARB Method 5, with modifications noted in this method. The components of the collected sample are each divided into two equal portions with one portion of each component used for total chromium analysis and the other portion used for hexavalent chromium analysis.

1. 2. 1 Hexavalent Chromium Analysis

For the hexavalent chromium analysis the collected sample component portions are extracted in an alkaline solution and analyzed by the diphenylcarbazide colorimetric method.

1. 2. 2 Total Chromium Analysis

For the total chromium analysis the collected samples must be prepared in order to convert organic forms of chromium to inorganic forms, to minimize organic interferences, and to convert the sample to a suitable solution for analysis. Samples are then subjected to an acid digestion procedure. Following the appropriate dissolution and dilution of the sample, a representative aliquot is placed manually or by means of an automatic sampler into a graphite tube furnace. The sample aliquot is then slowly evaporated to dryness, charred (ashed), and atomized. The absorption of hollow cathode radiation during atomization will be proportional to the chromium concentration.

1. 3 FIGURES

The following figures summarize features of this method.

1. 3. 1 Figure 1.

Sample Collection and Recovery for Hexavalent and Total Chromium

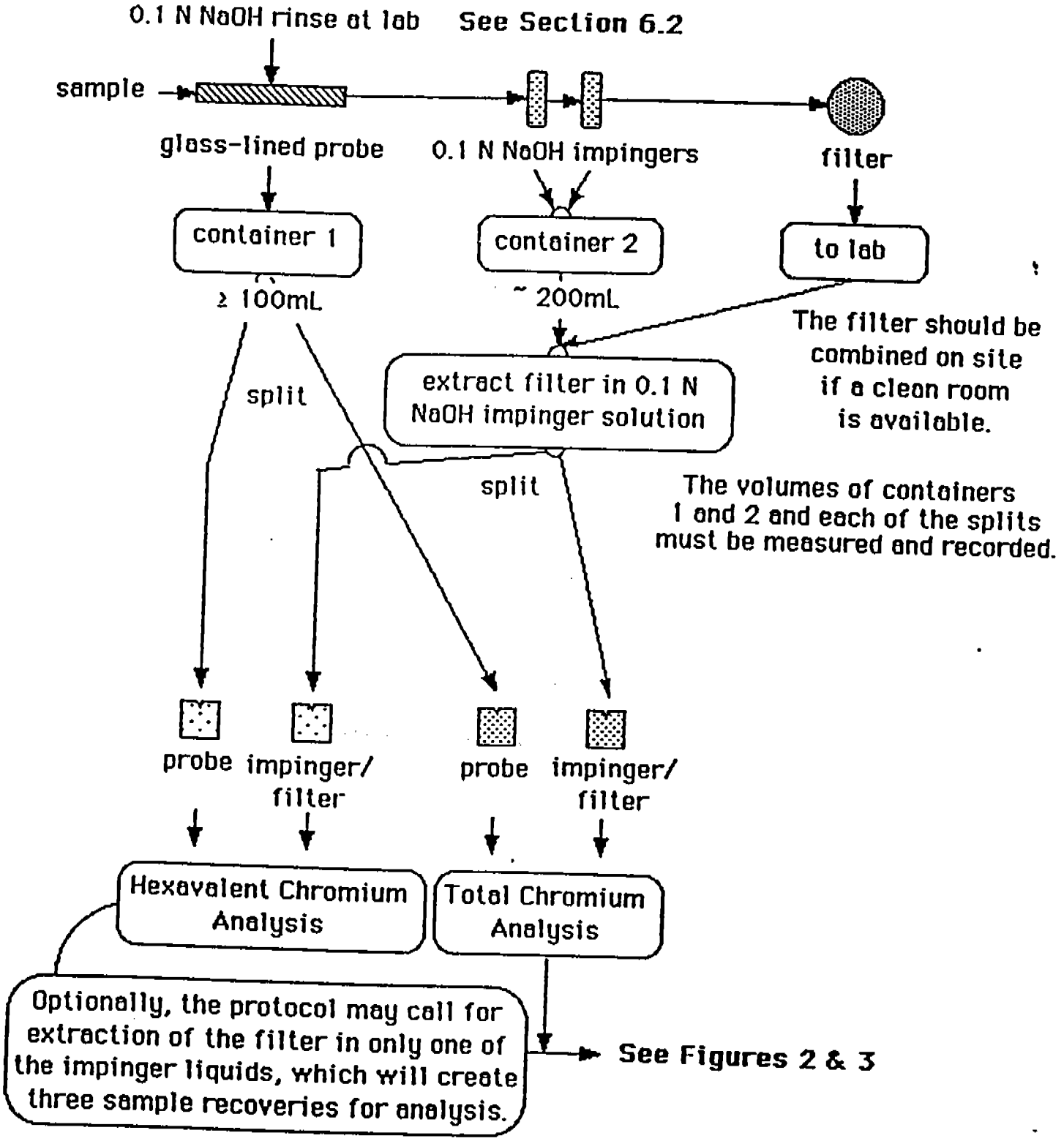

1. 3. 2 Figure 2.

Hexavalent Chromium Analysis

optionally, the protocol may call for extraction of the filter in only one of the impinger liquids, which will create three sample recoveries for analysis

See Figure 1 and Sections 6.4 and 6.5

typically:
two separate analyses

transfer ~ 35 mL to a 100mL beaker

adjust the pH to 1±0.2 with 6N sulfuric acid and add 1.0 mL of diphenylcarbazide solution

bring to volume in a 50 mL volumetric flask

dilute to volume with water - let color develop 10 minutes

filter to remove suspended solids after pre-wetting medium retention filter paper with a few mL each of first reagent blank and then sample

measure absorbance of a sample portion and reagent blank at 540 nm

if reading exceeds calibration, dilute with reagent blank or remeasure using less of remaining sample

1. 3. 3 Figure 3.

Total Chromium Analysis

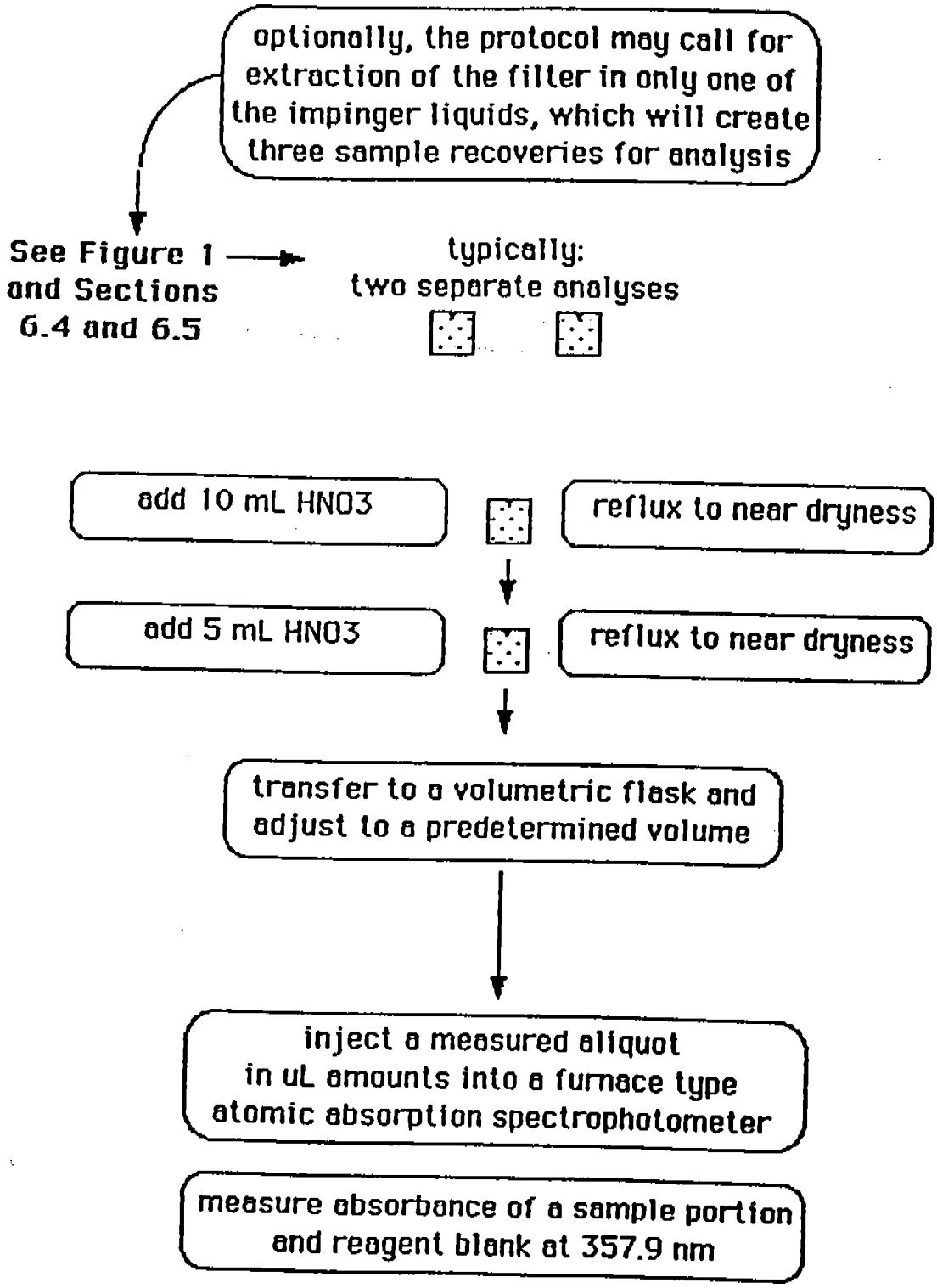

2 RANGE, SENSITIVITY, PRECISION, AND INTERFERENCES

2.1 RANGE

2.1.1 Hexavalent Chromium

A straight line response curve was obtained in the range 0.5 ug Cr(VI)/50 mL to 3.0 ug Cr(VI)/50 mL. For a minimum analytical accuracy of 100 ± 10 percent, the lower limit of the range is 2 ug/100mL. The upper limit can be extended by appropriate dilution or by using a smaller cell path length after recalibration for the smaller cell. (Reference 8.3)

2.2 SENSITIVITY

The minimum sampling volume should be calculated for each test and should be based upon [1] the targeted minimum detectable concentration at the source, [2] the expected minimum detection limit achievable at the laboratory, and [3] the sampling time limitations at the source.

2.2.1 Hexavalent Chromium

A minimum detection limit, of 0.2 ug Cr(VI)/50mL using a 5 cm cell, has been observed. (Reference 8.3)

2.3 PRECISION FOR HEXAVALENT CHROMIUM

The overall precision for sample collection and analysis for Cr(VI) will be determined after data are collected from a test protocol which includes multiple simultaneous sampling techniques.

2.4 INTERFERENCES

2.4.1 Interferences of Hexavalent Chromium

Molybdenum, mercury and vanadium react with diphenylcarbazide to form a color; however, approximately 20 mg of elements can be present in a sample without creating a problem. Iron produces a yellow color, but this effect is not measured photometrically at 540 nm.

2.4.2 Interferences for Total Chromium

2.4.2.1 The long residence time and high concentrations of the atomized sample in the optical path of the graphite furnace can result in severe physical and chemical interferences. Furnace parameters must be optimized to minimize these effects. If the analyte is not completely volatilized and removed from the furnace during atomization, memory effects will occur. If this situation is detected, the tube should be cleaned by operating the furnace at higher atomization temperatures.

2. 4. 2. 2 Nitrogen should not be used as the purge gas because of a possible CN band interference.

2. 4. 2. 3 Low concentrations of calcium may cause interferences; at concentrations above 200 mg/L calcium's effect is constant. Calcium nitrate is therefore added to ensure a known constant effect. This step may be omitted if the sample is known to be free of calcium or no analytical interferences are expected.

2. 5 ALTERNATIVE METHODS

Direct Measurement of Gas Volumes through Pipes and Small Ducts

Air Resources Board Method 2A may be used, where applicable, as an alternative to pitot tube methods specified in Method 5, as referenced herein.

Hexavalent Chromium Determination by Ion Chromatography

For hexavalent chromium concentrations which are within the detection range of ion chromatography, this analytical method may be used instead of the colorimetry method specified in these pages. This option applies only to the analysis of hexavalent chromium. The remainder of the test method shall be performed as specified.

Total Chromium Determination by Flame Atomic Absorption Spectroscopy

For high total chromium concentrations which are within the detection range of flame atomic absorption spectroscopy, this analytical method may be used instead of the furnace type method specified in these pages. This option applies only to the analysis of total chromium. The remainder of the test method shall be performed as specified.

Other Methods

The Executive Officer or authorized representative may approve an alternative test method (including other techniques or conditions) for the determination of hexavalent and/or total chromium emissions from stationary sources. To approve an alternative method, the Executive Officer or authorized representative may require the submission of test data demonstrating that the alternative method is equivalent to Method 425.

3 APPARATUS

All surfaces which may come in contact with sample must be glass, Teflon, or other similarly non-metallic (stainless steel may be a source of chromium contamination) inert material. See Section 5.2.

Any other sampling apparatus which, after review by the Executive Officer, is deemed equivalent for the purposes of this test method, may be used.

3. 1 SAMPLING TRAIN

Except where otherwise noted in this method, same as CARB Method 5, Section 2.1. Exceptions include a glass nozzle, a glass lined stainless steel probe, 0.1 N NaOH in the first two impingers, a Teflon-coated glass fiber filter, and a silica gel moisture trap after the filter. As shown in Figure 1, sample flow should be through the probe first, then the impingers, and then the filter.

3. 2 SAMPLE RECOVERY

Except where otherwise noted in this method, same as CARB Method 5, Section 2.2. Also, see Section 6. 2 of this method.

3. 3 ANALYSIS

The following apparatus and materials are needed:

3. 3. 1 Analysis of Hexavalent Chromium

3. 3. 1. 1 100 mL beakers

3. 3. 1. 2 Filtration Apparatus

Vacuum unit constructed of glass, to accommodate sintered glass funnels. Medium porosity filter paper is optional. Wherever filtering is specified, centrifuging may also be performed at the analyst's option.

3. 3. 1. 3 Volumetric Flasks

100-mL and other appropriate volumes.

3. 3. 1. 4 Hot Plate

3. 3. 1. 5 Pipettes

Assorted sizes, as needed.

3. 3. 1. 6 Spectrophotometer

To measure absorbance at 540nm.

3. 3. 2 Analysis of Total Chromium

3. 3. 2. 1 Philips Beakers

Borosilicate, 125mL, with digestion covers.

3. 3. 2. 2 Chromium Hollow Cathode Lamp or Electrodeless Discharge Lamp.

3. 3. 2. 3 Graphite Furnace

Any graphite furnace device with the appropriate temperature and timing controls.

3. 3. 2. 4 Strip Chart Recorder

A recorder is recommended for furnace work so that there will be a permanent record and so that any problems with the analysis such as drift, incomplete atomization, losses during charring, changes in sensitivity, etc., can easily be recognized.

4 REAGENTS

Unless otherwise indicated, all reagents must conform to the specifications established by the Committee on Analytical Reagents of the American Chemical Society. Where such specifications are not available, use the best available grade.

4. 1 SAMPLING

Except where otherwise noted in this method, same as CARB method 5, Section 3.1, except Teflon-coated glass fiber filters are used, and 0.1 N NaOH is used in the first two impingers. See section 4.3.2 below.

4. 2 SAMPLE RECOVERY

Except where otherwise noted in this method, same as CARB Method 5, Section 3.2.

4. 3 REAGENTS FOR HEXAVALENT CHROMIUM

4. 3. 1 Type II Water

Type II water is deionized and distilled, meeting American Society for Testing and Materials (ASTM) specification for type reagent - ASTM Test Method D 1193-77. The water should be monitored for impurities.

4. 3. 2 Batch of 0.1% NaOH Solution, Analytical Reagent Grade

The same batch of 0.1N NaOH solution should be used for impinger sampling, sample recovery, preparation, extraction, and analysis. Therefore, sampling and analytical personnel should coordinate their plans so that all steps in sampling

and analysis use the same batch of solution which will be prepared fresh for each source test. Typically, dissolve 4.0 g NaOH in water in a 1 liter volumetric flask and dilute to the mark. Repeat, as necessary, so that a single batch of sufficient volume is prepared to serve all of the needs of sampling and analysis. Store the solution in a tightly capped polyethylene bottle.

4. 3. 3 Potassium Dichromate Stock Solution

Dissolve 2.829 g of analytical reagent grade potassium dichromate ($K_2Cr_2O_7$) in water, and dilute to 1 liter (1 mL = 1000 ug Cr(VI)).

4. 3. 4 Potassium Dichromate Standard Solution

Dilute 10.00 mL potassium dichromate stock solution to 100 mL (1 mL = 100 ug Cr(VI) with water.

4. 3. 5 Sulfuric Acid, 6N, Analytical Reagent Grade

Dilute 166 mL sulfuric acid to 1000 mL in water.

4. 3. 6 Diphenylcarbazide Solution, Analytical Reagent Grade

Dissolve 0.5 g of 1,5-diphenylcarbazide in 100 mL acetone. Store in a brown bottle. Discard when the solution becomes discolored.

4. 3. 7 0.1% Potassium Permanganate Solution

Analytical Reagent Grade

4. 3. 8 0.01% Potassium Permanganate Solution

Analytical Reagent Grade

4. 3. 9 Removal of Reducing Agents in the Reagents

The 0.1 N NaOH extraction solution (4.3.2) and the 6N sulfuric acid solution (4.3.5) may contain small amounts of reducing agents that can react with the hexavalent chromium. Potassium permanganate is added to these reagents in order to neutralize these reducing agents. Pipette 3 mL of the extraction solution into cuvettes A and B. Use cuvette A as a sample cell and cuvette B as a reference cell. Zero the instrument at 528 nm with both cuvettes. Wait 10 minutes. Add an adequate amount (uL) of 0.01% potassium permanganate solution (4.3.8) to cuvette A. Enough should be added so that after 10 minutes a slight change in absorbance is observed. This step may have to be repeated a number of times in order to determine the required amount of potassium permangante that is required. From the change in absorbance, calculate the amount of potassium permanganate that is needed to nuetralize the

reducing agents found in the reagents. Then pipette the proper volume of higher concentration 0.1% potassium permanganate solution (4.3.7) into the reagents. This is done by assuming that the number of milliequivalents of reducing agents in the reagents are equal to the number of milliequivalents of 0.1% potassium permanganate pipetted.

This procedure is repeated with the 6N sulfuric acid solution.

4. 4 REAGENTS FOR TOTAL CHROMIUM

4. 4. 1 ASTM Type II Water (ASTM D1193)

Refer to section 4.3.1.

4. 4. 2 Concentrated Nitric Acid

4. 4. 2. 1 Reagent preparation should use Ultrex or equivalent grade HNO_3.

4. 4. 2. 2 Glassware cleaning should use ACS reagent grade HNO_3.

4. 4. 3 Hydrogen Peroxide (30%) (Optional), Analytical Reagent Grade

4. 4. 4 Matrix Modifier

Follow manufacturer's recommendations, when interferences are suspected.

4. 4. 5 Total Chromium Standard Stock Solution (1000mg/L)

Either procure a certified aqueous standard from a supplier (Spex Industries, Alpha Products, or Fisher Scientific) and verify by comparison with a second standard, or dissolve 2.829 g of Potassium Dichromate ($K_2Cr_2O_7$, analytical reagent grade) in Type II water and dilute to 1 liter.

4. 4. 6 Total Chromium Working Standards

All total chromium preparations injected for analysis shall be prepared to contain 1.0% (v/v) HNO_3. The zero standard shall be 1.0 % (v/v) HNO_3.

5 SAMPLE COLLECTION, PRESERVATION, AND HANDLING

5. 1 SAMPLE COLLECTION

Except where otherwise indicated in this method, all samples are collected from the source by use of CARB Method 6. Exceptions include a glass nozzle, a glass lined stainless steel probe, 0.1 N NaOH in the first two impingers, and a Teflon-coated glass fiber filter. As shown in Figure 1, sample flow should be through the probe first, then the impingers, and then the filter.

5. 2 SAMPLE HANDLING AND PRESERVATION

All surfaces which may come in contact with sample must be glass, Teflon, or other similarly non-metallic (even stainless steel may be a source of chromium contamination) inert material and must be prewashed with detergents, soaked in 1:1 HNO_3 for several hours, rinsed with Type II water, and finally rinsed with 0.1 N NaOH batch solution. For awkward objects, such as long glass probes, soaking may be replaced by careful wiping.

5. 2. 1 Probes are generally the most difficult sampling apparatus to clean. Therefore, before use in sampling, to ensure that sampling equipment is clean and free of chromium contamination, apparatus which may come in contact with sample must be cleaned until a sample of final rinse for each probe has been analyzed as below the detection limit for total chromium. The procedures of Section 6 shall be followed for this contamination check.

If the specified glass probes are in short supply, the cleaning protocol required above could double the number of days necessary to complete a series of tests. Two options exist which reduce mid-course delays in a sampling effort:

5. 2. 1. 1 Another cleaning procedure may be used if it is tested and documented as achieving the objective of no detectable chromium in the last probe cleaning rinse. Testing and documentation shall include: a pre-test visit to the intended site, collection of samples from an intended test point with the highest expected concentration of chromium, trials of other cleaning procedures, and documentation of those which pass the analytical tests and are used instead of the cleaning procedures in Section 5.2.1 above.

5. 2. 1. 2 The risk of mid-course cleaning delays may be reduced by the use of a sufficient number of probes which have been pre-cleaned and contamination checked by the procedures of Sections 5.2.1 or 5.2.1.1. Extra probes should be included to allow for breakage.

6 PROCEDURES FOR SAMPLE RECOVERY, PREPARATION, AND ANALYSIS

6. 1 SILICA GEL WEIGHING

For stack gas moisture determination, weigh the spent silica gel or silica gel plus impinger to the nearest 0.5 g using a balance. This step may be conducted in the field.

6. 2 SAMPLE COLLECTION AND RECOVERY

The sample is collected using probe, impingers, and filter.

6. 2. 1 Probe

The probe is rinsed with 0.1 N NaOH. The total rinse volume should exceed 100 mL and be stored in container 1. (Measure the volume.) The probe rinse is transported to a clean room or to a site with laboratory conditions where it is split with half saved for hexavalent chromium analysis and half saved for total chromium analysis. Each sample split is ~50mL. (Measure the volumes.)

6. 2. 2 Impingers and Filter

The sampling and analytical personnel shall discuss the expected sample concentrations and the analytical limits of detection for hexavalent and total chromium. The impinger catch and filter should be handled one of two ways depending on these expectations as directed in Sections 6.2.2.1 and 6.2.2.2 below.

6. 2. 2. 1 Higher Concentrations

If it <u>is not</u> considered important to minimize the dilution of any sample component, then the contents of both impingers (~200mL total) shall be combined and stored in container 2. (Measure the volume.) As soon as possible, the filter is transported in a filter container to a site with laboratory conditions where it should be extracted in all of the impinger solution from container 2. The extraction should include shaking for a minimum of 30 minutes. The alkaline impinger medium will retard reduction of hexavalent chromium. The extract solution is split with half saved for hexavalent chromium analysis and half saved for total chromium analysis. Each sample split is ~100 mL. (Measure the volumes.)

6. 2. 2. 2 Lower Concentrations

If it <u>is</u> considered important to minimize the dilution of any sample component, then the contents of each impinger (~100mL each) may be stored in containers 2 and 3. (Measure the volumes.) The filter shall be extracted in only one of the impinger contents, whichever is suspected to have the higher concentration. The extraction shall include shaking for a minimum of 30 minutes. The contents of the first impinger are stored in container 2 and those of the second impinger in container 3. Whichever impinger contents are not used for extraction must be handled as a third sample recovery requiring separate analyses. Both sample recoveries are split as described above. Each sample split is ~50 mL. (Measure the volumes.)

6. 3 REAGENT BLANK PREPARATION

Hexavalent Chromium Reagent Blank

For each preparation, transfer 35 mL of solution to a 100mL beaker, adjust the pH to 1.0 ± 0.2 with 6N sulfuric acid, add 1.0 mL of diphenylcarbazide solution, dilute to volume with water in a 50 mL volumetric flask, and let color develop for 10 minutes.

Total Chromium Reagent Blank

For total chromium, the reagent blank is simply 1 % HNO_3.

6. 4 SAMPLE PREPARATION

6. 4. 1 Hexavalent Chromium Sample Preparation

For each preparation, transfer 35 mL of solution to a 100mL beaker, adjust the pH to 1.0 ± 0.2 with 6N sulfuric acid, add 1.0 mL of diphenylcarbazide solution, dilute to volume with water in a 50 mL volumetric flask, and let color develop for 10 minutes. (This leaves at least 15 mL of sample split for further analyses. The total volume of sample split must be known at this point.)

6. 4. 2 Total Chromium Sample Preparation

In a beaker, add 10ml of concentrated nitric acid to the sample aliquot taken for analysis. Cover the beaker with a digestion cover. Place the beaker on a hot plate and reflux the sample down to near dryness. Add another 5mL nitric acid to complete digestion. Reflux the sample volume down to near dryness.

Wash down the beaker walls and digestion cover with distilled water and filter the sample to remove silicates and other insoluble material that could clog the nebulizer. Filtration should be done only if there is concern that insoluble materials may clog the nebulizer. Adjust the volume to 50 mL or a predetermined value based on the expected metal concentrations. The final concentration of HNO_3 in the solution should be 1 % (v/v). The sample is now ready for analysis. The applicability of a sample preparation technique must be demonstrated by analyzing spiked samples and/or relevant standard reference materials.

6. 5 ANALYSIS

6. 5. 1 Hexavalent Chromium Analysis

The analyst must filter the preparation for clarity at this point. Medium retention filter paper should be used. The filter paper shall be pre-wetted with a few mL of reagent blank and sample preparation. This will prime the filter so that it won't absorb color complex.

Transfer a portion of the filtered preparation into a 5 cm absorption cell.

Measure the absorbance at the optimum wavelength of 540 nm.

Subtract the sample blank absorbance reading to obtain a net reading.

If the absorbance reading of a sample preparation exceeds the calibration range, dilute with reagent blank or re-measure using less of the sample preparation. (There should be about 15mL remaining at this point. See Sections 6.2.1, 6.2.2.1, and 6.2.2.2.)

6. 5. 2 Check for Matrix Effects on the Cr(VI) Results

As the analysis for Cr(VI) by colorimetry is sensitive to the chemical composition of the sample (matrix effects), the analyst shall check at least one sample from each source using the following method: Obtain two equal volume aliquots of the same sample solution. The aliquots should each contain between 6 and 10 ug of Cr(VI) (less if not possible). Spike one of the aliquots with an aliquot of standard solution that contains between 6 and 10 ug of Cr(VI). Now treat both the spiked and unspiked sample aliquots as described in Section 6.4.1 above. Next, calculate the Cr(VI) mass Cs, in ug in the aliquot of the unspiked sample solution by using the following equation:

$$Cs = Ca \frac{As}{At-As} \qquad \text{Eq. 1}$$

where:

Ca = Cr(VI) in the standard solution, ug.

As = Absorbance of the unspiked sample solution.

At = Absorbance of the spiked sample solution.

Volume corrections will not be required since the solutions as analyzed have been made to the same final volume. If the results of this method used on the single source sample do not agree to within 10 percent of the value obtained by the

routine spectrophotometric analysis, then reanalyze all samples from the source using the method of standard additions procedure.

6. 5. 3 Total Chromium Analysis

The 357.9-nm wavelength line shall be used.

Follow the manufacturer's operating instructions for all other spectrophotometer parameters.

Furnace parameters suggested by the manufacturer should be employed as guidelines. Since temperature-sensing mechanisms and temperature controllers can vary between instruments or with time, the validity of the furnace parameters must be periodically confirmed by systematically altering the furnace parameters while analyzing a standard. In this manner, losses of analyte due to higher than necessary temperature settings or losses in sensitivity due to less than optimum settings can be minimized. Similar verification of furnace parameters may be required for complex sample matrices.

Inject a measured uL aliquot of preparation into the furnace and atomize. If the concentration found exceeds the calibration range, the sample should be diluted in the same acid matrix and reanalyzed. The use of multiple injections can improve accuracy and help detect furnace pipetting errors.

Subtract a sample blank reading from a sample reading to obtain a net reading.

7 CALIBRATION, QUALITY CONTROL, AND DATA REPORTING

7. 1 GENERAL

Perform all of the calibrations described in CARB Method 5, Section 5, with any modifications appropriate for this method.

7. 2 CALIBRATION AND QUALITY CONTROL FOR HEXAVALENT CHROMIUM

7. 2. 1 Calibrate the wavelength scale of the spectrophotometer every 6 months. The calibration may be accomplished by using an energy source with an intense line emission such as a mercury lamp, or by using a series of glass filters spanning the measuring range of the spectrophotometer. Calibration materials are available commercially and from the National Institute of Standards and Technology. Specific details on the use of such materials should be supplied by the vendor; general information about calibration techniques can be obtained from general reference books on analytical chemistry. The wavelength scale of the spectrophotometer must read correctly within ±5 nm at all calibration points; otherwise, the spectrophotometer shall be repaired and recalibrated. Once the wavelength scale of the spectrophotometer is in

proper calibration, use 540 nm as the optimum wavelength for the measurement of the absorbance of the standards and samples.

7. 2. 2 Alternatively, a scanning procedure may be employed to determine the proper measuring wavelength. If the instrument is a double-beam spectrophotometer, scan the spectrum between 530 and 550 nm using a 50 ug Cr(VI) standard solution in the sample cell and a reagent blank solution in the reference cell. If a peak does not occur, the spectrophotometer is malfunctioning and should be repaired. When a peak is obtained within the 530 to 550 nm range, the wavelength at which this peak occurs shall be the optimum wavelength for the measurement of absorbance of both the standards and the samples. For a single-beam spectrophotometer, follow the scanning procedure described above, except that the reagent blank and standard solutions shall be scanned separately. The optimum wavelength shall be the wavelength at which the maximum differences in absorbance between the standard and the reagent blank occurs.

7. 2. 3 Either (1) run a series of chromium standards and construct a calibration curve by plotting the concentrations of the standards against the absorbances or (2) if necessary, for the method of standard additions, plot added concentration versus absorbance.

7. 2. 4 Each standard for hexavalent chromium is made up fresh in a separate 50mL volumetric flask starting with 35 mL of the same batch of NaOH solution reserved for its sample set. Then an appropriate amount of hexavalent chromium is added to each calibration standard, starting with none for the zero standard. Then 6N sulfuric acid and diphenylcarbazide solution are added in the same manner as in sample preparation.

7. 3 CALIBRATION AND QUALITY CONTROL FOR TOTAL CHROMIUM

7. 3. 1 Either (1) run a series of chromium standards and reagent blanks and construct a calibration curve by plotting the concentrations of the standards against the absorbances or (2) for the method of standard additions, plot added concentration versus absorbance. For instruments that read directly in concentration, set the curve corrector to read out the proper concentration.

Calibration standards for total chromium should start with 1% v/v HNO_3 with no chromium for the zero standard with appropriate increases in total chromium concentration in the other calibration standards. The calibration standards should be prepared following the steps outlined in sample preparation.

7. 3. 2 Run a check standard after approximately every 10 sample injections. Standards are run in part to monitor the life and performance of the graphite tube. Lack of reproducibility or a significant change in the signal for the standards indicates that the tube should be replaced.

7. 3. 3 Duplicates, spiked samples, and check standards should be routinely analyzed.

7. 3. 4 Calculate metal concentrations (1) by the method of standard additions, or (2) from a calibration curve, or (3) directly from the instrument's concentration readout. All dilution or concentration factors must be taken into account. Concentrations reported for multiphased or wet samples must be appropriately qualified (e.g., 5 ug/g dry weight).

7. 3. 5 Calibration curves must be composed of a minimum of a reagent blank and three total chromium standards. A calibration curve should be made for every batch of samples, unless check standards remain within 10% of the last calibration curve.

7. 3. 6 Dilute samples with reagent blank solution if they are more concentrated than the highest standard or if they fall on the plateau of a calibration curve.

7. 3. 7 Employ a minimum of one matrix-matched sample blank per sample batch to determine if contamination or any memory effects are occurring.

7. 3. 8 Test the system with check standards after approximately every 15 samples.

7. 3. 9 Run one duplicate sample for every 10 samples, providing there is enough sample for duplicate analysis. A duplicate sample is a sample brought through the whole sample preparation.

7. 3.10 Spiked samples or standard reference materials shall be used daily to ensure that correct procedures are being followed and that all equipment is operating properly. This will serve as a check on calibration standards, too.

7. 3.11 Whenever sample matrix problems are suspected, the method of standard additions shall be used for the analysis of all extracts, or whenever a new sample matrix is being analyzed.

7. 3.12 The concentration of all calibration standards should be verified against a quality control check sample obtained from an outside source.

7. 3.13 All quality control data should be maintained and available for easy reference or inspection.

7. 4 DATA REPORTING

Carry out the calculations, retaining at least one extra decimal figure beyond that of the acquired data. Round off figures after final calculations.

7. 4. 1 Total Cr(VI) in Sample

Calculate and report m_h, the total ug Cr(VI) in the sample. This can be obtained from the calibration curve or from the method of standard additions. Note that m_h is the sum of the masses of hexavalent chromium analyses performed on all sample splits. Also take in account the dilutions when calculating m_h.

Report these calculations based on net readings, but report all sample blank data, too.

7. 4. 2 Total Chromium in the Sample

Calculate and report m_t, the total ug of chromium in the sample. This can be obtained from the calibration curve or from the method of standard additions. Note that m_t is the sum of the masses of total chromium analyses performed on all sample splits. Also take into account the necessary dilutions when calculating out m_t.

Report these calculations based on net readings, but report all sample blank data, too.

7. 4. 3 Average Dry Gas Meter Temperature and Average Orifice Pressure Drop

Except where otherwise noted in this method, same as Method 5, Section 6.2.

7. 4. 4 Dry Gas Volume, Volume of Water Vapor, Moisture Content

Except where otherwise noted in this method, same as Method 5, Sections 6.3, 6.4, and 6.5, respectively.

7. 4. 5 Cr(VI) Emission Concentration

Calculate and report $[h]_s$ (g/dscm), the Cr(VI) concentration in the stack gas, dry basis, corrected to standard conditions, as follows:

$$[h]_s = (10^{-6} g/ug)(m_h/V_{m(std)})$$

7. 4. 6 Total Chromium Emission Concentration

Calculate and report $[t]_s$ (g/dscm), the total chromium concentration in the stack gas, dry basis, corrected to standard conditions as follows:

$$[t]_s = (10^{-6} g/ug)(m_t/V_{m(std)})$$

7. 4. 7 Isokinetic Variation, Acceptable Results

Except where otherwise noted in this method, same as Method 5, Sections 6.11 and 6.12, respectively.

8 REFERENCES

8. 1 US. Environmental Protection Agency/Office of Solid Waste, Washington, D.C., "Test Methods for Evaluating Solid Waste, Physical/Chemical Methods, "SW-846 (1986), Third Edition.

8. 2 Same as in Bibliography of Method 5, Citations 2 to 6 and 7.

8. 3 California Air Resources Board, Inorganic Analysis Section. (1988)