Note: This is a reference cited in *AP 42, Compilation of Air Pollutant Emission Factors, Volume I Stationary Point and Area Sources.* AP42 is located on the EPA web site at www.epa.gov/ttn/chief/ap42/

The file name refers to the reference number, the AP42 chapter and section. The file name "ref02_c01s02.pdf" would mean the reference is from AP42 chapter 1 section 2. The reference may be from a previous version of the section and no longer cited. The primary source should always be checked.

EMISSION TEST REPORT

GREENSBORO INDUSTRIAL PLATERS
GREENBORO, NORTH CAROLINA

ESED 85/02
EMB NO. 86-CEP-01

Prepared By
ENTROPY ENVIRONMENTALISTS, INC.
POST OFFICE BOX 12291
RESEARCH TRIANGLE PARK, NORTH CAROLINA 27709

CONTRACT NO. 68-02-4336
WORK ASSIGNMENT NOS. 3 and 5
PN: 3503 and 3505

EPA TASK MANAGER
FRANK CLAY

U.S. ENVIRONMENTAL PROTECTION AGENCY
EMISSION MEASUREMENT BRANCH
EMISSION STANDARDS AND ENGINEERING DIVISION
RESEARCH TRIANGLE PARK, NORTH CAROLINA 27711

OCTOBER 1986

CONTENTS

	Page
Figures	iv
Tables	v
1.0 INTRODUCTION	1-1
2.0 PROCESS OPERATION	2-1
2.1 Process Description	2-1
2.2 Air Pollution Control	2-1
2.3 Process Conditions During Testing	2-4
3.0 SUMMARY OF RESULTS	3-1
3.1 Hexavalent Chromium and Total Chromium	3-3
3.1.1 Mist Eliminator Inlet	3-3
3.1.2 Mist Eliminator Outlet	3-4
3.2 Emissions in Units of Process Rate and Control Equipment Collection Efficiency	3-7
3.2.1 Emissions in Units of Process Rate	3-7
3.2.2 Control Equipment Collection Efficiency	3-9
3.3 Particle Size Distribution	3-9
3.4 Analysis of Chrome Plating Solutions	3-9
3.5 Summary of Analytical Results for Hexavalent and Total Chromium	3-13
3.6 Summary of Evaluations and Results for Methods Development Test	3-13
3.6.1 Sample Train Collection Efficiency and Evaluation of Hexavalent Chromium Conversion to Trivalent Chromium	3-20
3.6.2 Evaluation of the Method 5 Sample Train for Collection of Chromium	3-23
3.6.3 Methods Evaluations Conclusions	3-25
3.6.4 Summary of Analytical Results for Methods Evaluation Runs	3-25
4.0 SAMPLING LOCATIONS AND TEST METHODS	4-1
4.1 No. 6 Plating Tank Mist Eliminator Inlet (Test Location A)	4-1
4.2 No. 6 Plating Tank Mist Eliminator Outlet (Test Location B)	4-5

CONTENTS (continued)

4.3 No. 6 Plating Tank Mist Eliminator Wash Down Drain Pipe (Test Location C) 4-8

4.4 No. 6 Plating Tank Anode, Cathode, and Bath Solution (Test Location D) 4-8

4.5 No. 6 Plating Tank Rinse Tank (Test Location E) 4-8

4.6 No. 5 Plating Tank Exhaust (Test Location F) 4-8

4.7 Velocity and Gas Temperature 4-10

4.8 Molecular Weight 4-10

4.9 Sampling Trains 4-10

4.10 Hexavalent Chromium Content 4-11

4.11 Total Chromium Content 4-11

5.0 QUALITY ASSURANCE 5-1

APPENDICES

A TEST RESULTS AND EXAMPLE CALCULATIONS A-1

Hexavalent Chromium and Total Chromium A-3
Example Calculaitons A-7
Particle Size for Hexavalent Chromium and Total Chromium A-90

B FIELD AND ANALYTICAL DATA B-1

Chromium Field Data B-3
Particle Size Distribution Field Data B-56
Moisture Catch Analysis B-59
Chromium Sample Inventory B-72
Hexavalent and ICP Chromium Analysis B-83
NAA Total Chromium Analysis B-91

C SAMPLING AND ANALYTICAL PROCEDURES C-1

Determination of Hexavalent Chromium Emissions C-3
Determination of Total Chromium Content C-15
Determination of Particle Size Distribution C-21
Methods Development - Variations in Sampling Train Configuration, Sample Recovery, and Sample Analysis C-25

D CALIBRATION AND QUALITY ASSURANCE DATA D-1

E MRI PROCESS DATA E-1

F TEST PARTICIPANTS AND OBSERVERS F-1

FIGURES

Number		Page
2-1	Schematic Diagram of Hard Chromium Plating Tanks at Greensboro Industrial Platers	2-2
2-2	Schematic of Exhaust System for Tank 6	2-5
3-1	Graphic Summary of Particle Sizing Data	3-10
4-1	Process Air Flow Schematic, No. 6 Plating Tank and Control Equipment Showing Test Locations	4-2
4-2	Mist Eliminator Inlet (Test Location A)	4-4
4-3	Cross Section of Mist Eliminator Inlet Showing Locations of Six Points Traversed On Axis Perpendicular To Single Point	4-6
4-4	Mist Eliminator Outlet Stack (Test Location B)	4-7
4-5	Exhaust Duct on No. 5 Plating Tank (Methods Development Test Location E)	4-9
C-1	Method 13-Type Impinger Train	C-4
C-2	Andersen Mark III Cascade Impactor Loading Sequence	C-23
C-3	Sample Splits for Train #2	C-26

TABLES

Number		Page
2.1	Dimensions and Operating Parameters of Hard Chromium Plating Tanks 5 and 6 at Greensboro Industrial Platers	2-3
2.2	Average Operating Parameters Recorded for Four Emissions Source Test Runs on Tank 6	2-7
2.3	Total Current Supplied to Tank 6 During Four Emissions Source Test Runs	2-9
3.1	Testing Schedule for Greensboro Industrial Platers	3-2
3.2	Summary of Flue Gas Conditions	3-5
3.3	Summary of Hexavalent Chromium and Total Chromium Emissions	3-6
3.4	Summary of Emission Rates in Units of Process Rate and Efficiency	3-8
3.5	Summary of Particle Size Distribution	3-11
3.6	Summary of Chrome Plating Solutions for Tank No. 6	3-12
3.7	Summary of Analytical Results for Hexavalent Chromium and Total Chromium	3-14
3.8	Summary of Flue Gas Conditions	3-17
3.9	Summary of Hexavalent Chromium and Total Chromium Emissions	3-19
3.10	Sample Train (Impinger) Collection Efficiency	3-21
3.11	Evaluation of Hexavalent to Trivalent Chromium Conversion Both During and After Sample Collection	3-22
3.12	Method 5 Type Sample Train Collection Efficiency and Comparison With Impinger Type Sample Train	3-24
3.13	Method 5 Type Sample Train Collection Efficiency and Comparison With Impinger Type Sample Train	3-26
3.14	Summary of "A" and "B" Train Analytical Results for Helavalent and Total Chromium	3-27
4.1	Sampling Plan for Greensboro Industrial Platers	4-3
5.1	Field Equipment Calibration	5-2
5.2	Audit Report Chromium Analysis	5-3
C.1	Summary of Sampling Trains Used	C-28

1.0 INTRODUCTION

During the weeks of March 17 and 24, 1986, Entropy Environmentalists, Inc. conducted an emission measurement program at Greensboro Industrial Platers' facility located in Greensboro, North Carolina. The purpose of this program was to provide data to support a possible chromium standard under the National Emissions Standards for Hazardous Air Pollutants (NESHAPS).

Comprehensive testing was conducted on the No. 6 hard chromium plating tank whose emissions are controlled by a mist eliminator. This source was selected for source sampling for the following reasons:

- The plant is representative of a medium-sized job shop that performs hard chromium electroplating. Hard chromium plate is applied to textile, hydraulic, woodworking, and laundry machinery parts. Also, based on operating parameters such as current, voltage, plating time, and chromic acid concentration, the plating tank selected for testing appears to be typical of other hard chromium plating tanks in the electroplating industry.

- The plating tank is large and operates at relatively high workloads. A substantial amount of chromic acid mist is evident across the entire surface of the plating bath when operated at full capacity. Although polypropylene balls are added to the bath, they are used primarily to retain heat and have only a minor effect on reducing misting. Chemical fume suppressants are not used in the bath to control misting. These factors assure an adequate emission sample to characterize the uncontrolled emissions and the performance of the mist eliminator.

- The emission capture system applied appears to be effective in directing fumes from the plating tank to the control device. The tank is equipped with two-sided lateral exhaust hoods that have 2-inch slots. An induction fan pulls a total of 226 cubic meters per second (7,970 cubic feet per minute) of air through the exhaust hoods. The ventilation rate of the exhaust hoods is 39 cubic meters per minute per square meter (126 cubic feet per minute per square foot) of liquid surface.

- The mist eliminator appears to be well-maintained and -operated. The chevron-blade mist eliminator is typical of the impingement-type mist eliminators in use at other hard chromium plating facilities. The mist eliminator is washed down on a routine schedule to ensure proper operating performance.

- The design operating parameters of the mist eliminator includes a gas flow rate of 283 cubic meters per minute (10,000 cubic feet per minute) and a pressure drop of 0.89 kilopascals (3.5 inches of water column). The mist eliminator is made of polyvinyl chloride and contains 31 chevron-blades spaced 3.18 centimeters (1.25 inches) apart. The curl on the front of the blades is 0.36 centimeters (0.38 inches) long.

Hexavalent chromium and total chromium concentrations were measured at the inlet and outlet of the mist eliminator serving the No. 6 plating tank. The measurements were made to characterize the capability of the mist eliminator for controlling chromium emissions from chromium electroplating facilities. Additional measurements were made at the No. 5 plating tank exhaust for methods development. Testing was performed using U.S. Environmental Protection Agency (EPA) Reference Method 5 procedures and a Method 13-type impinger train*, and the alternate sample preparation and analytical procedures described in Appendix C. Flue gas flow rates, temperature, and moisture content were measured in conjunction with the chromium testing.

Mr. Randy Strait [Midwest Research Institute (MRI)] monitored the process operation throughout the test period. Mr. Frank Clay (EPA Task Manager) of the Emissions Measurement Branch (EMB) and Mr. Al Vervaert of the Industrial Studies Branch (ISB) observed the test program. Mr. Robert Hester served as the contact for Greensboro Industrial Platers.

This report is organized into several sections addressing various aspects of the testing program. Immediately following this introduction is the "Process Operation" section which includes a description of the process and control device tested. Following this is the "Summary of Results" section which presents table summaries of the test data and discusses these results. The next section, "Sampling Locations and Test Methods" describes and illustrates the sampling locations used for emissions testing and then explains the sampling strategies used. The final section, "Quality Assurance," notes the procedures used to ensure the integrity of the sampling program. The Appendices present the Test Results and Example Calculations (Appendix A); Field and Analytical Data (Appendix B); Sampling and Analytical Procedures (Appendix C); Calibration and Quality Assurance Data (Appendix D); MRI Process Data (Appendix E); and Test Participants and Observers (Appendix F).

---

*43 Federal Register 11984, 3/23/78 (Method 5) and 43 Federal Register 41852, 6/20/80 (Method 13).

2.0 PROCESS OPERATION

2.1 PROCESS DESCRIPTION

The Greensboro Industrial Platers plant is a medium-sized job shop that performs hard chromium electroplating of textile, hydraulic, woodworking, and laundry machinery parts. Hard chromium plating of these parts provides a wear-resistant surface and protection from corrosion. The plant also performs decorative chromium plating with a trivalent bath as well as copper and cadmium plating. The plant has been operated since 1955 and presently employs 22 workers. Operating hours are 10 hours per day, 4 days per week.

The hard chromium plating facility consists of six tanks, arranged as shown in Figure 2-1. Based on size; operating parameters such as current, voltage, and plating time; and chromic acid concentration, all six tanks are typical of other hard chromium plating tanks used in the electroplating industry. The dimensions and operating parameters for Tanks 5 and 6, which were the only tanks at which tests were conducted, are presented in Table 2-1. The plating solution used in the six tanks is a conventional chromic acid solution containing about 255 grams of chromic acid per liter (g/ℓ) (34 ounces per gallon [oz/gal]) of plating solution. About 454 kilograms (1,000 pounds) of chromic acid are consumed per month. Sulfuric acid in a concentration of about 2.55 g/ℓ (0.34 oz/gal) of solution is added as a catalyst.

During plating, chromium is deposited at a rate of about 0.025 millimeter (0.001 inch [in.]) per hour or 1 mil per hour, which requires a current density of approximately 0.35 amperes per square centimeter (2.25 amperes per square inch) of surface area plated. As much as 10 to 12 mils of chromium are deposited on some parts.

2.2 AIR POLLUTION CONTROL

Two lateral exhaust hoods are installed on each side of Tank 5. The hoods are approximately 1.7 meters (m) (5.7 feet [ft]) in length and contain six slots each. The slots are 27 centimeters (cm) (10.5 in.) in length and 5 cm (2 in.) in width. The two hoods on each side of the tank are spaced 7.6 cm (3 in) apart at the center of the tank. The gas flow rate for the entire ventilation system was not measured during the test.

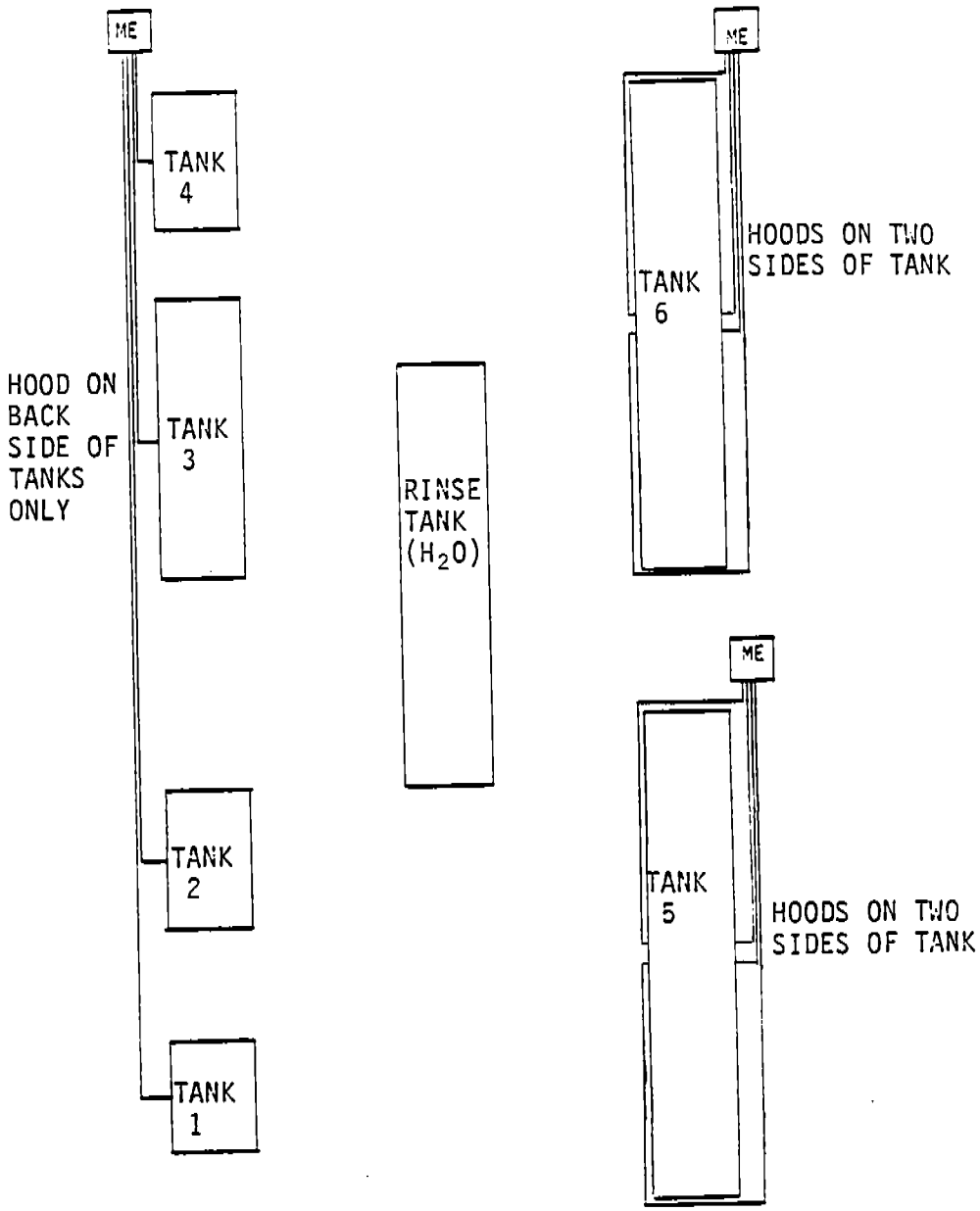

Figure 2-1. Schematic diagram of hard chromium plating tanks at Greensboro Industrial Platers.

TABLE 2-1. DIMENSIONS AND OPERATING PARAMETERS OF HARD CHROMIUM PLATING TANKS 5 AND 6 AT GREENSBORO INDUSTRIAL PLATERS

Tank No.	Dimensions (l, w, d)[a] m (ft)	Capacity, ℓ (gal)	Voltage, volts[b]	Current, amperes[b,c]	Method of cooling	Constituents, g/ℓ (oz/gal)[d] CrO_3	H_2SO_4
5	3.6, 1.2, 1.8 (11.8, 4, 6)	8,020 (2,120)	15	10,000	Water	255 (34)	2.55 (0.34)
6	6.4, 0.9, 1.8 (21, 3, 6)	10,710 (2,830)	15	8,000	Water	255 (34)	2.55 (0.34)

[a] l = length, w = width, d = depth.
[b] Maximum operating values.
[c] Direct current.
[d] CrO_3 = Chromic acid, H_2SO_4 = sulfuric acid.

The National Institute for Occupational Safety and Health conducted a study of the ventilation system installed on Tank 5 in November 1981 and measured the gas flow rate to be 332 actual cubic meters per minute (acmm) (11,730 actual cubic feet per minute [acfm]) and the ventilation rate to be 74 acmm per square meter ($/m^2$) (240 acfm per square foot [$/ft^2$]) of surface area.[1] Only one of the exhaust hoods on Tank 5 was tested for the test methods development phase of the test program. The sampling location is described in Section 4.6 of this report.

A schematic of the exhaust system for Tank 6 is shown in Figure 2-2. Two lateral exhaust hoods are installed on each side of Tank 6. The hoods are approximately 3.1 m (10.3 ft) in length and contain 12 slots each. The slots are 27 cm (10.5 in.) in length and 5 cm (2 in.) in width. The two hoods on each side of the tank are spaced 7.6 cm (3 in.) apart at the center of the tank. The gas flow rate through the hoods is 225 acmm (7,970 acfm), and the ventilation rate is 39 $acmm/m^2$ (126 $acfm/ft^2$) of surface area.

Emissions that are captured by the exhaust system are vented to a chevron-blade mist eliminator suspended from the ceiling of the plating shop. The mist eliminator was manufactured and installed by KCH Services, Incorporated, in 1980. The design operating parameters of the mist eliminator include a gas flow rate of 283 acmm (10,000 acfm) and a pressure drop of 0.19 kilopascals (kPa) (0.75 inches of water column [in. w.c.]). However, the gas flow rate to the mist eliminator was 226 acmm (7,970 acfm) and the pressure drop was 0.02 kPa (0.1 in. w.c.), during the mass emissions tests. The mist eliminator is made of polyvinyl chloride and contains 31 chevron blades spaced 3.18 cm (1.25 in.) apart. The curl on the front of the blades is 0.96 cm (0.38 in.) in length. The chevron blades are arranged to change the direction of gas flow four times at 30° angles. The mist eliminator is periodically washed with water, and the wash water drains into the plating tank.

2.3 PROCESS CONDITIONS DURING TESTING

Emission testing was conducted at the inlet and outlet of the mist eliminator on Tank 6 to characterize the performance of the mist eliminator and uncontrolled emissions from the hard chromium plating

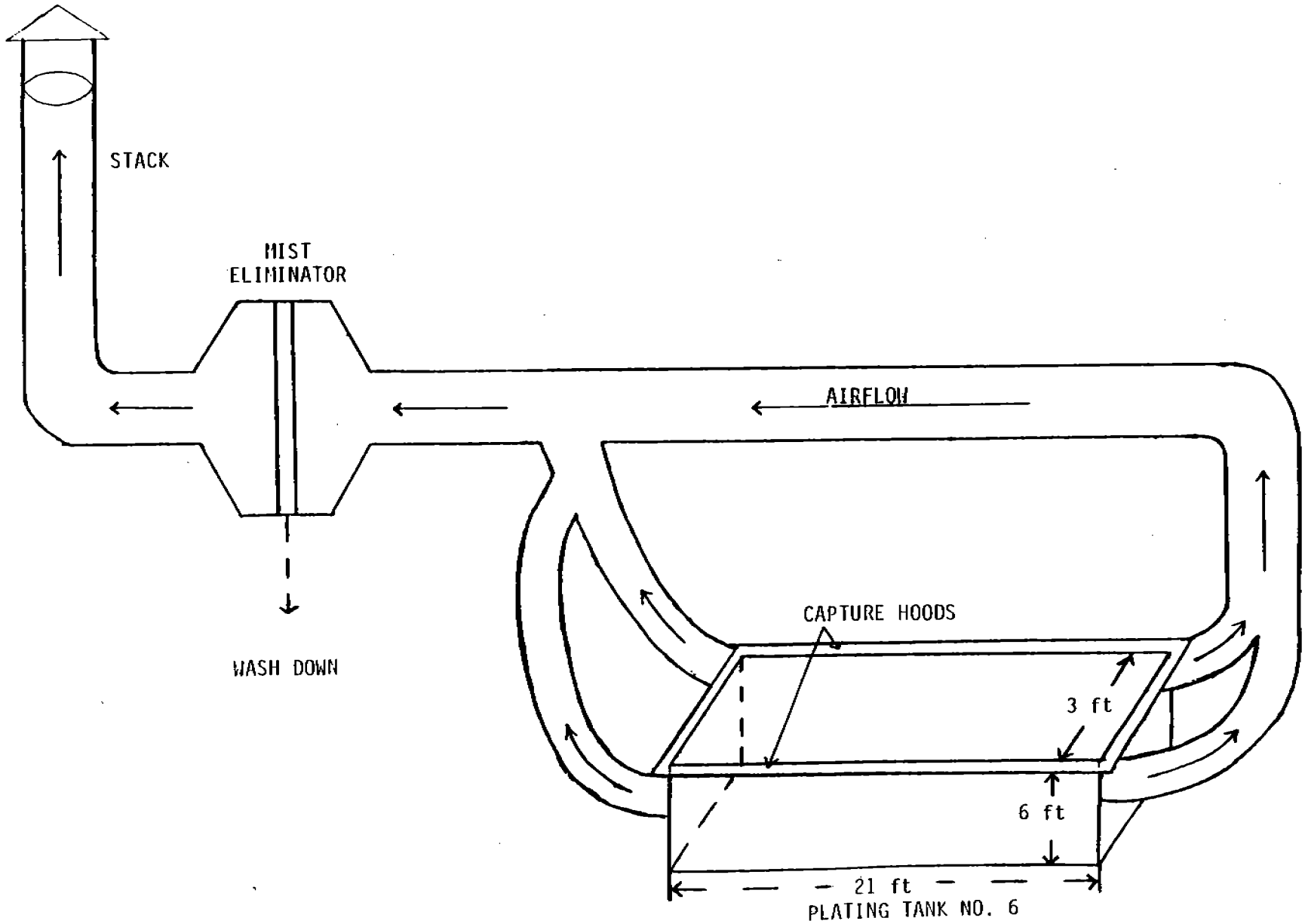

Figure 2-2. Schematic of exhaust system for Tank 6.

tank. The process was operating normally during the test. Process operating parameters such as the voltage, current, and temperature were monitored and recorded during each test run. Descriptions (dimensions and surface area) and plating requirements (current and plating time) of each individual part plated and the pressure drop across the mist eliminator also were recorded during each test run. Process data sheets documenting the process and control device operating parameters during mass emission testing (test run Nos. MI-1 through 4 and MO-1 through 4) and particle size distribution testing (test run Nos. MI-S1 through 3 and MO-S1 through 3) are presented in Appendix E. Data on the average operating parameters recorded during the mass emission test runs are presented in Table 2-2.

Grab samples were taken from Tank 6 and the rinse tank to determine the chromic acid concentration of the plating solution and the rinse water during each mass emission test run. Grab samples of the mist eliminator wash water also were taken to determine the chromic acid concentration of the wash water. The mist eliminator was washed down after the first and second and the third and fourth mass emission test runs and after the second and third particle size distribution test runs. The chromic acid concentration of the grab samples is reported in Section 3.4 of this report.

Test run No. 1 was interrupted three times, run No. 2 was interrupted one time, and run Nos. 3 and 4 were interrupted two times each to change parts. Testing was stopped during each interruption. During test run No. 2, three fuses were blown in the rectifier, which caused the rectifier to operate at or near its maximum current capacity of 8,000 amperes. Emissions testing was not discontinued because the plant manager stated that the higher amount of current applied was within normal operating conditions for the type and number of parts being plated. However, some mist was observed escaping above the capture system before the rectifier was repaired during test run No. 4.

Polypropylene balls that float on the surface of the plating solution are used in the plating tank to reduce heat loss, evaporation, and, to some limited extent, misting. The balls are approximately 3.2 cm (1.25 in.) in diameter. During plating, the polypropylene balls cover only about 50 percent of the surface area of the plating tank because they

TABLE 2-2. AVERAGE OPERATING PARAMETERS RECORDED FOR FOUR EMISSIONS SOURCE TEST RUNS ON TANK 6

Test No. Inlet/ Outlet	Operating voltage, volts	Operating current, amperes	Temperature of plating solution, °C (°F)	Pressure drop across mist eliminator, kPa (in. w.c.)[a]
MI-1/MO-1	9.3	5,955	49 (120)	0.02 (0.1)
MI-2/MO-2	8.1	5,563	46 (114)	0.02 (0.1)
MI-3/MO-3	10.0	7,931	50 (122)	0.02 (0.1)
MI-4/MO-4	8.7	5,444	62 (143)	0.02 (0.1)

[a]kPa = Kilopascal, in. w.c. = inches of water column.

are pushed away from the anodes and cathodes where the surface of the bath is agitated by gassing. Consequently, the polypropylene balls do not reduce misting in the active area of the tank where plating, and consequently misting, actually occurs.

The total amount of current supplied to the tank during each test run is calculated in terms of ampere-hours. The ampere-hour calculations are included in Appendix E and a summary of the total current values is presented in Table 2-3.

Process operating parameters also were monitored for Tanks 5 and 6 during methods development testing. Operating conditions for both tanks were normal during the tests. Process data sheets documenting process operating parameters for Tank 5 (test run Nos. TE-1 A and B through TE-14 A and B) and Tank 6 (MO-5A and B through MO-7A and B) also are presented in Appendix E.

References

1. Spottswood, Stephanie E. In-Depth Survey Report of Greensboro Industrial Plating, Greensboro, North Carolina. National Institute for Occupational Safety and Health. Cincinnati, Ohio. November 1981. p. 13-15.

TABLE 2-3. TOTAL CURRENT SUPPLIED TO TANK 6 DURING FOUR EMISSIONS SOURCE TEST RUNS

Test No. Inlet/Outlet	Total current, ampere-hour Inlet	Outlet
MI-1/MO-1	15,885	15,851
MI-2/MO-2	11,653	11,453
MI-3/MO-3	16,809	17,968
MI-4/MO-4	11,586	11,961

3.0 SUMMARY OF RESULTS

The chromium (total and hexavalent) mass emission rate tests and chromium particle size distribution tests were conducted at the inlet and outlet of the No. 6 plating tank chevron-blade mist eliminator. In addition to the testing for possible emissions standard setting, several series of paired sample train test runs were conducted to evaluate a Method 13-type "impinger train" sampling train for use in a potential reference method for collecting and measuring hexavalent and/or total chromium emissions. Table 3.1 summarizes the testing schedule.

In brief, from the results of the Impinger Train testing, the uncontrolled emissions from the tank averaged 0.057 pounds per hour of hexavalent chromium and 0.064 pounds per hour of total chromium. The controlled emissions averaged 0.007 pounds per hour of hexavalent chromium and 0.008 pounds per hour of total chromium. The resulting collection efficiency on a mass emission rate basis was 87.1% for hexavalent chromium and 86.8% for total chromium. The particle size distribution tests were only calculated for total chromium due to the problems encountered with the extraction of the hexavalent chromium from the filters. The particle size distribution tests for tank No. 6 showed that about 25% by weight of the uncontrolled emissions were greater 10 um and about 36% by weight of the controlled emissions were greater than 10 um.

The methods evaluation tests demonstrated that the Impinger Train quantitatively collects both the hexavalent chromium and total chromium with an average of 99.9% of the emissions being collected prior to the backup filter. As a result of quantitative removal of all the chromium by the impingers, the backup filter would not be required in the sampling train. The use of a Method 5 (front filter) type train for chromium emissions at this level showed some low bias, but would not be considered acceptable for a reference method due to the fact that (1) the front filter could not quantitatively remove all the chromium from the emissions and (2) the potential for conversion of the hexavalent chromium to another valence during the sample collection phase. The tests on the impinger train to detect possible conversion of the hexavalent chromium during and after sample collection, indicated that some conversion may take place during testing when distilled water is used in the impingers. No significant conversion was evident over time after the sample was collected.

TABLE 3.1. TESTING SCHEDULE FOR GREENSBORO INDUSTRIAL PLATERS

Date (1986)	Sample Type	No. 6 Plating Tank Mist Eliminator Inlet		No. 6 Plating Tank Mist Eliminator Outlet		No. 5 Plating Tank Exhaust	
		Run No.	Test Time 24 h clock	Run No.	Test Time 24 h clock	Run No.	Test Time 24 h clock
3/18	Cr^{+6}, Total Cr	MI-1	0838-1207	MO-1	0836-1150	TE-1A	0915-1021
	"	MI-2	1310-1532	MO-2	1310-1530	TE-1B	0915-1022
	"					TE-2A	1253-1400
	"					TE-2B	1254-1402
	"					TE-3A	1429-1533
	"					TE-3B	1430-1534
3/19	Cr^{+6}, Total Cr	MI-3	0804-1042	MO-3	0805-1052	TE-4A	0924-1031
	"	MI-4	1110-1600	MO-4	1110-1606	TE-4B	0926-1032
	"					TE-5A	1105-1211
	"					TE-5B	1105-1211
	"					TE-6A	1305-1410
	"					TE-6B	1306-1411
3/24	Cr^{+6}, Total Cr					TE-7A	1305-1410
	"					TE-7B	1306-1411
	"					TE-8A	1442-1545
	"					TE-8B	1443-1546
	Particle Size	MI-S1	1304-1614	MO-S1	1304-1614		
3/25	Cr^{+6}, Total Cr					TE-9A	0820-0925
	"					TE-9B*	0821-0926
	"					TE-10A	1016-1119
	"					TE-10B*	1017-1120
	"					TE-11A	1332-1436
	"					TE-11B	1333-1437
	"					TE-12A	1511-1616
	"					TE-12B	1512-1617
	Particle Size	MI-S2	0832-1206	MO-S2	0832-1339		
	"	MI-S3	1419-1638	MO-S3	1420-1632		
3/26	Cr^{+6}, Total Cr			MO-5A	0831-1054	TE-13A	0829-0949
	"			MO-5B	0834-1055	TE-13B	0830-0950
	"			MO-6A	1150-1356	TE-14A	1022-1127
	"			MO-6B	1151-1357	TE-14B	1023-1128
	"			MO-7A	1408-1628		
	"			TE-7B	1409-1629		

* Runs 9B and 10B are not included in this report due to unacceptable post-test meterbox calibrations; runs 13B and 14B (respectively) were performed as replacements.

Therefore, the impinger reagents should be 0.1N NaOH or equivalent to fix the sample immediately upon collection. Based on the results of the paired trains evaluation, the sampling and analytical method has a precision similar to that of EPA Method 5 and would be considered suitable for consideration as the reference method.

In the following sections, the results addressed above and additional results are presented and discussed in detail. The results are presented according to the emission type and sampling location for the control device and according to the type of evaluation for the methods performance tests. The computer printouts of the emission calculations can be found in Appendix A. The original field data sheets and the analytical data are located in Appendix B.

3.1 HEXAVALENT CHROMIUM AND TOTAL CHROMIUM

Chromium concentration measurements along with the determination of the associated flue gas flow rates were conducted at both inlet and outlet of the mist eliminator on tank No. 6. The samples were collected isokinetically using an impinger-type sample train. For analysis, the samples were initially filtered to remove all the chromium (residue) other than hexavalent chromium (in filtrate). An aliquot of the filtrate was then analyzed for hexavalent chromium and the residue (that filtered from the filtrate) was analyzed for chromium. The total chromium results for each sample were the sum of the hexavalent chromium in the filtrate and the chromium in the residue. A complete description of each sampling location and the sampling and analytical procedures are given in Chapter 4 and Appendix C.

3.1.1 Mist Eliminator Inlet

The mist eliminator inlet results represent the uncontrolled emissions from the No. 6 tank. The circular horizontal inlet duct was traversed through a single port due to the restrictions imposed by the location. As a result, a complete traverse was conducted in the horizontal direction and a partial traverse was conducted in the vertical direction (more fully described in Chapter 4). Prior to the testing, a pitot tube traverse was conducted to determine the amount of flow misalignment. The results demonstrated that the flow was fairly uniform (less than an average flow misalignment angle of 10°) despite the fact that it did not meet the requirements of Method 1 for length of duct before and after the sampling location.

Flue Gas Conditions and Isokinetic Sampling Rate - A summary of the flue gas conditions at the mist eliminator inlet and outlet is presented in Table 3.2. The volumetric flow rates were fairly consistent at the inlet and averaged 13,500 actual cubic meters per hour (478,000 actual cubic feet per hour). The flow rate at the inlet was approximately 18% greater than the outlet flow rate; this was likely due to the measurement error in the inlet flow rate measurements which were conducted in nonparallel flow (disturbed flow). The flue gas temperture averaged 21°C (71°F), with a moisture content of 1.7 percent. The oxygen, carbon dioxide, and carbon monoxide content was that of ambient air at 20.9, 0.0, and 0.0 percent, respectively. The volumetric flow rate at standard conditions averaged 12,900 dry standard cubic meters per hour (455,000 dry standard cubic feet per hour). Standard conditions are 20°C (68°), 760 mm Hg (29.92 in. Hg), and dry basis. The isokinetic sampling rates were well within the allowable for all four sample runs.

Hexavalent Chromium Emissions - A summary of the hexavalent chromium and total chromium emissions for each inlet and outlet test run are presented in Table 3.3. The uncontrolled hexavalent chromium emissions averaged 2.03 milligrams per dry standard cubic meter (0.0009 grains per dry standard cubic foot) and 0.026 kilograms per hour (0.057 pounds per hour).

Total Chromium Emissions - The total chromium emissions for each test run were consistent with their corresponding hexavalent chromium emissions and averaged about 12% higher. The uncontrolled emissions averaged 2.27 milligrams per dry standard cubic meter (0.001 grains per dry standard cubic foot) and 0.029 kilograms per hour (0.064 pounds per hour).

3.1.2 Mist Eliminator Outlet

The mist eliminator outlet represents the controlled emissions from the No. 6 tank. The sampling location was nearly ideal due to the fact that a temporary stack extension was added for the tests. Two ports were installed in the stack extension and two complete horizontal traverses were performed during each test run.

Flue Gas Conditions and Isokinetic Sampling Rate - A summary of the flue gas conditions at the mist eliminator outlet is presented in Table 3.2. The

TABLE 3.2. SUMMARY OF FLUE GAS CONDITIONS

Run No.	Date (1986)	Test Time 24 h clock	Volumetric Flow Rate Actual[a] acmh $\times 10^3$	Volumetric Flow Rate Actual[a] acfh $\times 10^3$	Volumetric Flow Rate Standard[b] dscmh $\times 10^3$	Volumetric Flow Rate Standard[b] dscfh $\times 10^3$	Stack Temperature °C	Stack Temperature °F	Moisture %	O_2 %	CO_2 %	Isokinetic %
No. 6 Plating Tank Mist Eliminator Inlet												
MI-1	3/18	0838-1207	13.8	489	13.4	473	18	65	1.0	20.9	0.0	99.6
MI-2	3/18	1310-1532	13.3	471	12.8	450	21	70	1.3	20.9	0.0	99.8
MI-3	3/19	0804-1042	13.7	484	12.9	456	23	74	2.1	20.9	0.0	100.9
MI-4	3/19	1110-1600	13.3	469	12.5	441	23	74	2.3	20.9	0.0	99.8
Average			13.5	478	12.9	455	21	71	1.7	20.9	0.0	100.0
No. 6 Plating Tank Mist Eliminator Outlet												
MO-1	3/18	0836-1150	11.4	402	10.9	385	22	71	1.1	20.9	0.0	97.9
MO-2	3/18	1310-1530	11.6	411	11.0	389	23	74	1.6	20.9	0.0	99.3
MO-3	3/19	0805-1052	11.5	407	10.8	381	27	80	1.5	20.9	0.0	98.5
MO-4	3/19	1110-1606	11.5	407	10.8	380	27	80	1.8	20.9	0.0	100.2
Average			11.5	407	10.9	384	25	76	1.5	20.9	0.0	99.0

[a]Volumetric flow rate in actual cubic meters per hour (acmh) and actual cubic feet per hour (acfh) at stack conditions.
[b]Volumetric flow rate in dry standard cubic meters per hour (dscmh) and dry standard cubic feet per hour (dscfh).

TABLE 3.3. SUMMARY OF HEXAVALENT CHROMIUM AND TOTAL CHROMIUM EMISSIONS

Run No.	Date (1986)	Hexavalent Chromium				Total Chromium			
		concentration		mass emissions		concentration		mass emissions	
		mg/dscm	gr/dscf x 10^{-3}	kg/h x 10^{-3}	lb/h x 10^{-3}	mg/dscm	gr/dscf x 10^{-3}	kg/h x 10^{-3}	lb/h x 10^{-3}
No. 6 Plating Tank Mist Eliminator Inlet									
MI-1	3/18	1.517	0.663	20.3	44.8	1.718	0.751	23.0	50.8
MI-2	3/18	2.446	1.069	31.2	68.8	2.729	1.193	34.8	76.7
MI-3	3/19	1.546	0.676	20.0	44.0	1.687	0.737	21.8	48.0
MI-4	3/19	2.590	1.132	32.3	71.2	2.936	1.283	36.6	80.7
Average		2.03	0.89	26.0	57.2	2.27	0.99	29.1	64.1
No. 6 Plating Tank Mist Eliminator Outlet									
MO-1	3/18	0.168	0.0736	1.83	4.05	0.221	0.091	2.41	5.31
MO-2	3/18	0.377	0.1647	4.15	9.15	0.436	0.190	4.80	10.58
MO-3	3/19	0.173	0.0758	1.87	4.13	0.188	0.082	2.03	4.47
MO-4	3/19	0.507	0.2214	5.45	12.01	0.565	0.247	6.07	13.38
Average		0.31	0.13	3.3	7.3	0.35	0.15	3.82	8.4

volumetric flow rate averaged 11,500 actual cubic meters per hour (407,000 actual cubic feet per hour) with a flue gas temperture average of 25°C (76°F) and a moisture content of 1.5 percent. The oxygen, carbon dioxide, and carbon monoxide content was that of ambient air at 20.9, 0.0, and 0.0 percent, respectively. The volumetric flow rate at standard conditions averaged 10,900 dry standard cubic meters per hour (384,000 dry standard cubic feet per hour). Standard conditions are 20°C (68°), 760 mm Hg (29.92 in. Hg), and dry basis. The isokinetic sampling rates were well within the allowable for all four sample runs.

Hexavalent Chromium Emissions - The controlled hexavalent chromium emissions for each test run were fairly consistent when compared to the simultaneous inlet runs and averaged 0.31 milligrams per dry standard cubic meter (0.00013 grains per dry standard cubic foot) and 0.0033 kilograms per hour (0.007 pounds per hour).

Total Chromium Emissions - The controlled total chromium emissions for each test run was consistent with the corresponding hexavalent chromium emissions and averaged about 16% higher. The total chromium emissions averaged 0.35 milligrams per dry standard cubic meter (0.00015 grains per dry standard cubic foot) and 0.0038 kilograms per hour (0.008 pounds per hour).

3.2 EMISSIONS IN UNITS OF PROCESS RATE AND CONTROL EQUIPMENT COLLECTION EFFICIENCY

The emission rates in units of process rate are presented in terms of grams of emissions per hour per square foot of tank surface area and in units of milligrams emissions per amperage input to the plating operation. To determine the collection efficiency of the mist eliminator, the milligrams per hour per square foot (uncontrolled emissions and controlled emissions) were used for the calculations.

3.2.1 Emissions in Units of Process Rate - The emissions in terms of units of process rate are expressed in relation to two process parameters, as shown in Table 3.4. The first is milligrams of emissions per amp-hour input into the plating operation. The second is grams of emissions per hour per

TABLE 3.4. SUMMARY OF EMISSION RATES IN UNITS OF PROCESS RATE AND EFFICIENCY

Date (1986)	Run Nos.	Process Rate amp-hr	Uncontrolled Emissions				Controlled Emissions				Collection Efficiency**	
			hexavalent chromium		total chromium		hexavalent chromium		total chromium		hexavalent chromium %	total chromium %
			mg/amp-hr	g/h/ft2*	mg/amp-hr	g/h/ft2*	mg/amp-hr	g/h/ft2*	mg/amp-hr	g/h/ft2*		
No. 6 Plating Tank Mist Eliminator Inlet												
3/18	MI-1	5,944	3.42	0.322	3.87	0.365	--	--	--	--		
3/18	MI-2	5,327	5.86	0.495	6.53	0.552	--	--	--	--		
3/19	MI-3	7,927	2.52	0.317	2.75	0.346	--	--	--	--		
3/19	MI-4	5,316	6.08	0.513	6.88	0.581	--	--	--	--		
Average		6,129	4.47	0.412	5.01	0.461	--	--	--	--		
No. 6 Plating Tank Mist Eliminator Outlet												
3/18	MO-1	5,944	--	--	--	--	0.308	0.029	0.405	0.038	91.0	89.6
3/18	MO-2	5,327	--	--	--	--	0.779	0.066	0.901	0.076	86.7	86.2
3/18	MO-3	7,927	--	--	--	--	0.236	0.030	0.256	0.032	90.5	90.8
3/18	MO-4	5,316	--	--	--	--	1.025	0.087	1.142	0.096	83.0	83.5
Average		6,129	--	--	--	--	0.587	0.053	0.676	0.061	87.1	86.8

* Emission rate in units of grams per hour per square foot of tank surface (gr/hr/ft2) using tank surface of 63.0 ft2.

** Collection efficiency of control equipment is based on the uncontrolled and controlled emission rate in units of emissions per hour per ft2 of tank surface.

square foot of tank surface area. The surface area of the tank was 63.0 ft^2 for all tests.

3.2.2 Control Equipment Collection Efficiency - The collection efficiency of the Chevron-blade type mist eliminator (see Table 3.4) averaged 87.1 % by weight for hexavalent chromium and 86.8 % by weight for total chromium. The higher emission rates appeared to produce a slight reduction in control efficiency. The collection efficiencies for both hexavalent and total chromium were fairly consistent.

3.3 PARTICLE SIZE DISTRIBUTION

Particle size distribution runs were conducted simultaneously at both the inlet and outlet of the mist eliminator. Each run was conducted at a point of average velocity. Each stage of the impactor was recovered and analyzed separately. Hexavalent chromium analysis was performed on each stage, however, the results indicate that there was a problem extracting all the hexavalent chromium with the small amount of liquid that had to be used due to the small amount of chromium on each filter. Therefore, only particle size distribution results for total chromium are shown. The results for hexavalent chromium should be similar since most of the emissions were actually hexavalent chromium. The summary of particle size distribution is shown in Table 3.5; a summary graph is presented in Figure 3.1 and the graphs for each run can be found in Appendix A.

The particle size distribution results for the uncontrolled emissions showed that approximately 25 % by weight of the chromium was less than 10 um in diameter, 10 % by weight less than 5 um, and 0.7 % by weight less than 1 um. The particle size distribution results for the controlled emissions showed that approximately 36 % by weight of the chromium was less than 10 um, 23 % by weight was less than 5 um, and 5 % by weight was less than 1 um.

3.4 ANALYSIS OF CHROME PLATING SOLUTIONS

Samples of the chrome plating solution were taken from plating tank No. 6 at points near the anode, cathode, and towards the center of the bath. Samples of the mist eliminator wash down and the rinse tank were also taken for each test day. A summary of the results for these samples is shown in Table 3.6. There were no significant differences between any of the tank and rinse solutions with respect to chromium content.

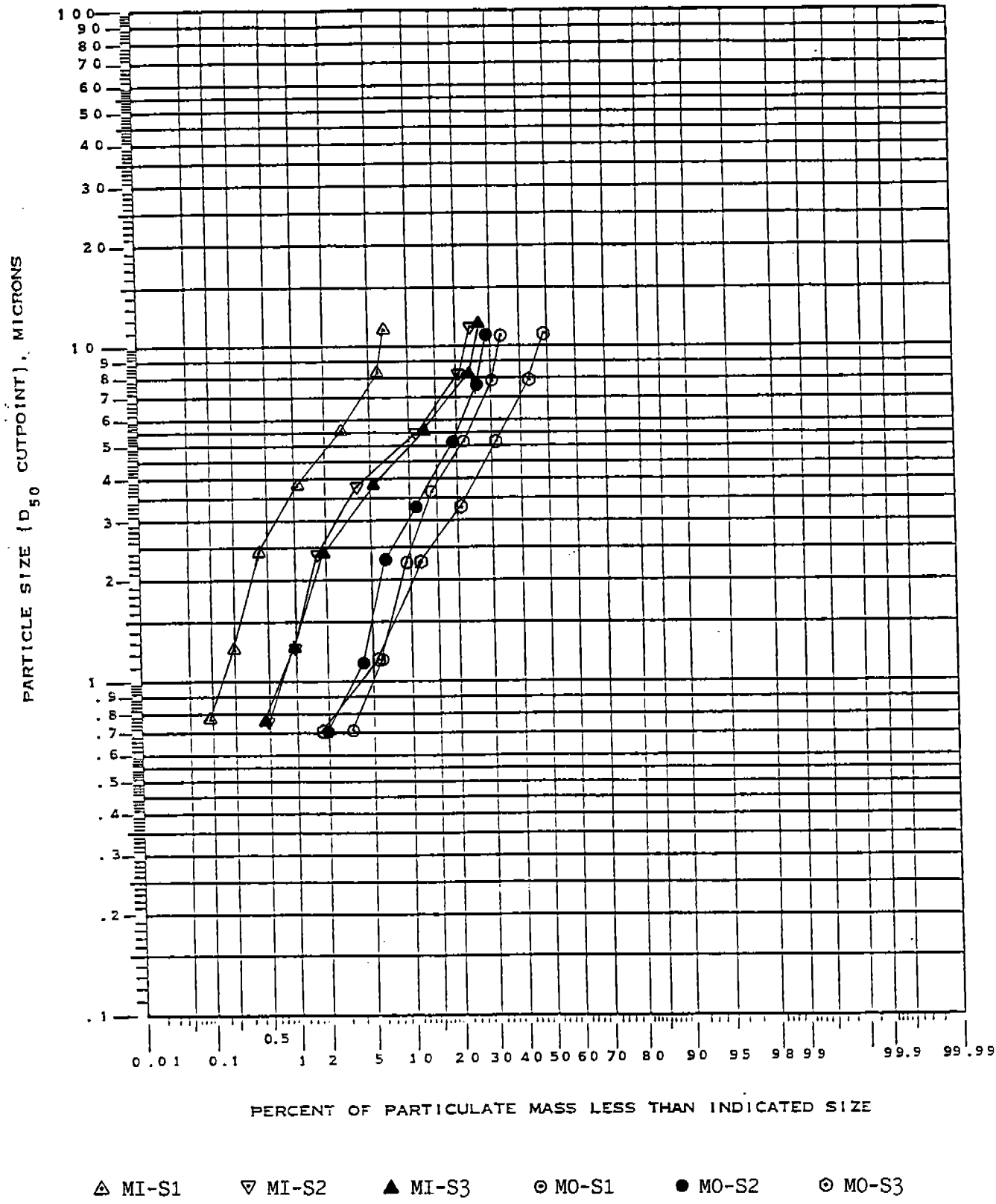

Figure 3.1. Graphic summary of particle sizing data.

TABLE 3.5. SUMMARY OF PARTICLE SIZE DISTRIBUTION*

Run No.	Date (1986)	Test Time 24 h clock	Total Chromium wt. less than size, %		
			1 um	5 um	10 um
No. 6 Plating Tank Mist Eliminator Inlet					
MI-S1	3/24	1304-1614	0.15	2.5	7.0 **
MI-S2	3/25	0832-1206	0.75	8.5	25
MI-S3	3/25	1419-1638	0.70	11.0	25
Average			0.73	9.8	25
No. 6 Plating Tank Mist Eliminator Outlet					
MO-S1	3/24	1304-1614	5.5	21	33
MO-S2	3/25	0832-1339	3.5	18	29
MO-S3	3/25	1420-1632	5.0	30	47
Average			4.7	23	36
				19	44

* Due to inadequate hexavalent chromium extraction, results for hexavalent chromium are considered not valid and are not presented.

** Value not included in average.

TABLE 3.6. SUMMARY OF CHROME PLATING SOLUTIONS FOR TANK NO. 6

Date (1986)	Run No.	Chromium Concentration of Solution at Location in Percent (%)*									
		Rinse Tank		Tank Anode		Tank Bath		Tank Cathode		Mist Eliminator Wash	
		Cr+6	Cr	Cr+6	Cr	Cr+6	Cr	Cr+6	Cr	Cr+6	Cr
3/18	MO/MI-1	-	-	13.7	15.3	13.6	14.9	13.2	14.2	7.7	8.6
3/18	MO/MI-2	0.1	0.1	13.4	14.7	13.5	13.8	13.3	14.2	4.0	4.2
3/19	MO/MI-3	-	-	12.9	14.1	12.8	13.9	12.7	13.4	6.2	6.6
3/19	MO/MI-4	0.1	0.1	13.0	14.4	13.1	13.9	12.8	13.4	2.2	1.6
3/25	MO/MI-S2									6.0	6.2
3/25	MO/MI-S3									1.2	1.0

*One percent chromium is equivalent to 2.578 ounces of CrO_3 per gallon.

3.5 SUMMARY OF ANALYTICAL RESULTS FOR HEXAVALENT AND TOTAL CHROMIUM

The summary of the analytical results for hexavalent and total chromium for all the samples collected across the mist eliminator serving tank No. 6 is presented in Table 3.7. The results shown in Table 3.7 for hexavalent and total chromium are the results obtained by the EPA tentative method for "Determination of Hexavalent Chromium Emissions from Stationary Sources" and the "EPA Protocol for Emissions Sampling for Both Hexavalent and Total Chromium" (see Appendix C). When, for total chromium analysis, the table indicates that the sample "residue" was analyzed, then the value presented for total chromium content are a sum of (1) the hexavalent chromium in the sample filtrate from the extraction of the sample measured by the tentative method and (2) the chromium in the sample residue from the extraction as measured by Neutron Activation Analysis or Inductively Coupled Argon Plasma Analysis. When the table indicates that the "total" sample was analyzed, then the value presented for total chromium content is from direct analysis of an aliquot of the sample for total chromium by Inductively Coupled Argon Plasma Analysis.

Quality assurance audit samples were analyzed using both the hexavalent and total chromium methods; the results are shown in the Quality Assurance Section (5.0). As can be seen in Table 5.2, no bias was present using either of the methods and, thus, the results are considered accurate.

3.6 SUMMARY OF EVALUATIONS AND RESULTS FOR METHODS DEVELOPMENT TESTING

All methods development testing was conducted using paired sample trains (two trains). Fourteen paired trains tests were conducted on an exhaust pickup duct on tank No. 5 and three paired trains tests were conducted at the outlet of tank No. 6. In each case, paired samples were collected at a single point within the duct. The sampling was conducted specifically to coompare different sampling and/or sample recovery procedures.

As shown in Table 3.8, the flue gas conditions were fairly consistent for all test runs. The isokinetic sampling rates were also within the allowable limits with the exception of runs TE-9A and TE-10B. For these two runs, the dry gas meter had an unaccetable post-test calibration and the results are not used in the evaluations. Table 3.9 presents the calculated emissions for all method evaluation runs. The individual evaluations and results are described below.

TABLE 3.7. SUMMARY OF ANALYTICAL RESULTS FOR HEXAVALENT AND TOTAL CHROMIUM

Run No.	Date (1986)	Sample Type	Sample No. Analyzed	Hexavalent Chromium Results, ug	Amount of Sample Analyzed	Total Chromium Results, ug
No. 6 Plating Tank Mist Eliminator Inlet						
MI-1	3/18	Impinger NaOH	G-117	4,490	Residue	5,090
MI-1	3/18	Teflon Filter	G-118	4.2	Residue	5.5
MI-2	3/18	Impinger NaOH	G-119	7,300	Residue	8,148
MI-2	3/18	Teflon Filter	G-120	4.3	Residue	4.7
MI-3	3/19	Impinger NaOH	G-121	4,460	Residue	4,874
MI-3	3/19	Teflon Filter	G-122	7.2	Residue	7.6
MI-4	3/19	Impinger NaOH	G-123	7,560	Residue	8,570
MI-4	3/19	Teflon Filter	G-124	< 2	Residue	< 2
MI-S1	3/24	Precutter Rinse	G-186	8,810	Total	9,320
"	"	First Stage Filter	G-187	85.5	Residue	164
"	"	Second Stage Filter	G-188	19.0	Residue	48.5
"	"	Third Stage Filter	G-189	149	Residue	320
"	"	Fourth Stage Filter	G-190	103	Residue	230
"	"	Fifth Stage Filter	G-191	34.7	Residue	76.2
"	"	Sixth Stage Filter	G-192	9.5	Residue	21.5
"	"	Seventh Stage Filter	G-193	1.4	Residue	9.9
"	"	Eighth Stage Filter	G-194	0.4	Residue	7.9
"	"	Solid Filter	G-195	< 0.2	Residue	< 1
MI-S2	3/25	Precutter Rinse	G-196	2,650	Total	2,780
"	"	First Stage Filter	G-197	19.1	Residue	43
"	"	Second Stage Filter	G-198	59.3	Residue	130
"	"	Third Stage Filter	G-199	181	Residue	372
"	"	Fourth Stage Filter	G-200	136	Residue	270
"	"	Fifth Stage Filter	G-201	43.4	Residue	85
"	"	Sixth Stage Filter	G-202	12.4	Residue	30
"	"	Seventh Stage Filter	G-203	5.6	Residue	18
"	"	Eighth Stage Filter	G-204	3.6	Residue	13.6
"	"	Solid Filter	G-205	0.4	Residue	2.4
MI-S3	3/25	Precutter Rinse	G-206	2,040	Total	2,040
"	"	First Stage Filter	G-207	14.8	Residue	36.8
"	"	Second Stage Filter	G-208	47.3	Residue	84.3
"	"	Third Stage Filter	G-209	134	Residue	279
"	"	Fourth Stage Filter	G-210	82.2	Residue	228
"	"	Fifth Stage Filter	G-211	33.3	Residue	94.3
"	"	Sixth Stage Filter	G-212	8.2	Residue	28.2
"	"	Seventh Stage Filter	G-213	1.3	Residue	15.8
"	"	Eighth Stage Filter	G-214	0.2	Residue	11.2
"	"	Solid Filter	G-215	< 0.2	Residue	< 0.2

(continued). . .

TABLE 3.7. (continued) SUMMARY OF ANALYTICAL RESULTS FOR HEXAVALENT AND TOTAL CHROMIUM

Run No.	Date (1986)	Sample Type	Sample No. Analyzed	Hexavalent Chromium Results, ug	Amount of Sample Analyzed	Total Chromium Results, ug
No. 6 Plating Tank Mist Eliminator Outlet						
MO-1	3/18	Impinger NaOH	G-91	672	Residue	886
MO-1	3/18	Teflon Filter	G-92	3.0	Residue	4.8
MO-2	3/18	Impinger NaOH	G-93	1,160	Residue	1,343
MO-2	3/18	Teflon Filter	G-94	1.8	Residue	3.3
MO-3	3/19	Impinger NaOH	G-95	685	Residue	750
MO-3	3/19	Teflon Filter	G-96	8.0	Residue	8.4
MO-4	3/19	Impinger NaOH	G-97	1,536	Residue	1,714
MO-4	3/19	Teflon Filter	G-98	2.0	Residue	2.3
MO-S1	3/24	Precutter Rinse	G-156	169	Total	198
"	"	First Stage Filter	G-157	0.5	Residue	11.5
"	"	Second Stage Filter	G-158	0.8	Residue	10.3
"	"	Third Stage Filter	G-159	7.5	Residue	26.0
"	"	Fourth Stage Filter	G-160	8.5	Residue	23.0
"	"	Fifth Stage Filter	G-161	4.7	Residue	16.2
"	"	Sixth Stage Filter	G-162	1.9	Residue	9.4
"	"	Seventh Stage Filter	G-163	0.4	Residue	9.4
"	"	Eighth Stage Filter	G-164	0.3	Residue	10.8
"	"	Solid Filter	G-165	< 0.2	Residue	< 1
MO-S2	3/25	Precutter Rinse	G-166	354	Total	397
"	"	First Stage Filter	G-167	0.9	Residue	14.9
"	"	Second Stage Filter	G-168	6.6	Residue	18.3
"	"	Third Stage Filter	G-169	20.0	Residue	38.5
"	"	Fourth Stage Filter	G-170	14.5	Residue	41.5
"	"	Fifth Stage Filter	G-171	7.9	Residue	30.4
"	"	Sixth Stage Filter	G-172	7.2	Residue	14.2
"	"	Seventh Stage Filter	G-173	3.3	Residue	15.3
"	"	Eighth Stage Filter	G-174	2.3	Residue	11.8
"	"	Solid Filter	G-175	0.2	Residue	0.2
MO-S3	3/25	Precutter Rinse	G-176	127	Total	141
"	"	First Stage Filter	G-177	1.3	Residue	5.5
"	"	Second Stage Filter	G-178	6.0	Residue	17.0
"	"	Third Stage Filter	G-179	20.4	Residue	38.9
"	"	Fourth Stage Filter	G-180	15.7	Residue	30.7
"	"	Fifth Stage Filter	G-181	8.9	Residue	25.4
"	"	Sixth Stage Filter	G-182	4.7	Residue	15.7
"	"	Seventh Stage Filter	G-183	1.5	Residue	9.5
"	"	Eighth Stage Filter	G-184	0.5	Residue	8.5
"	"	Solid Filter	G-185	< 0.2	Residue	< 1

(continued). . .

TABLE 3.7. (continued) SUMMARY OF ANALYTICAL RESULTS FOR HEXAVALENT AND TOTAL CHROMIUM

Run No.	Date (1986)	Sample Type	Sample No. Analyzed	Hexavalent Chromium Concentration, %*	Amount of Sample Analyzed	Total Chromium Concentration, %*
		No. 6 Plating Tank Solution Samples				
	3/18	Rinse Tank	G-130	0.1	Total	0.1
	3/19	Rinse Tank	G-131	0.1	Total	0.1
6A-1	3/18	Plating Tank Anode	G-132	13.7	Total	15.3
6A-2	3/18	Plating Tank Anode	G-133	13.4	Total	14.7
6A-3	3/19	Plating Tank Anode	G-134	12.9	Total	14.1
6A-4	3/19	Plating Tank Anode	G-135	13.0	Total	14.4
6B-1	3/18	Plating Tank Bath	G-136	13.6	Total	14.9
6B-2	3/18	Plating Tank Bath	G-137	13.5	Total	13.8
6B-3	3/19	Plating Tank Bath	G-138	12.8	Total	13.9
6B-4	3/19	Plating Tank Bath	G-139	13.1	Total	13.9
6C-1	3/18	Plating Tank Cathode	G-140	13.2	Total	14.2
6C-2	3/18	Plating Tank Cathode	G-141	13.3	Total	14.2
6C-3	3/19	Plating Tank Cathode	G-142	12.7	Total	13.4
6C-4	3/19	Plating Tank Cathode	G-143	12.8	Total	13.4
	3/18	Mist Eliminator Wash	G-144	8.7	Total	9.8
	3/19	Mist Eliminator Wash	G-149	6.2	Total	6.6

*One percent chromium is equivalent to 2.578 ounces of CrO^3 per gallon.

TABLE 3.8. SUMMARY OF FLUE GAS CONDITIONS

Run No.	Date (1986)	Test Time 24 h clock	Volumetric Flow Rate Actual[a] acmh x 10^3	Volumetric Flow Rate Actual[a] acfh x 10^3	Volumetric Flow Rate Standard[b] dscmh x 10^3	Volumetric Flow Rate Standard[b] dscfh x 10^3	Stack Temperature °C	Stack Temperature °F	Moisture %	O_2 %	CO_2 %	Isokinetic %
No. 5 Plating Tank Exhaust												
TE-1A	3/18	0915-1021	1.76	62.0	1.69	59.5	19	67	1.5	20.9	0.0	96.1
TE-1B	3/18	0915-1022	1.78	62.9	1.70	60.2	20	68	1.8	20.9	0.0	100.0
TE-2A	3/18	1253-1400	1.80	63.5	1.71	60.4	22	71	1.7	20.9	0.0	98.1
TE-2B	3/18	1254-1402	1.78	62.8	1.69	59.5	22	71	2.1	20.9	0.0	102.5
TE-3A	3/18	1429-1533	1.86	65.5	1.75	61.9	22	72	2.1	20.9	0.0	96.0
TE-3B	3/18	1430-1534	1.84	64.9	1.74	61.5	22	72	2.0	20.9	0.0	101.9
TE-4A	3/19	0924-1031	1.79	63.1	1.68	59.3	22	72	2.7	20.9	0.0	98.3
TE-4B	3/19	0926-1032	1.76	62.0	1.66	58.6	22	72	2.3	20.9	0.0	108.6
TE-5A	3/19	1104-1210	1.82	64.4	1.72	60.9	22	72	2.2	20.9	0.0	97.0
TE-5B	3/19	1105-1211	1.87	66.0	1.76	62.2	22	72	2.4	20.9	0.0	105.6
TE-6A	3/19	1305-1410	1.79	63.3	1.70	60.0	23	74	1.5	20.9	0.0	96.4
TE-6B	3/19	1306-1411	1.72	60.8	1.62	57.2	23	74	2.4	20.9	0.0	106.6
TE-7A	3/24	1305-1410	1.83	64.5	1.76	62.3	22	72	1.1	20.9	0.0	96.4
TE-7B	3/24	1306-1411	1.86	65.6	1.78	62.9	22	72	1.7	20.9	0.0	98.0
TE-8A	3/24	1442-1545	1.80	63.7	1.74	61.4	22	72	1.2	20.9	0.0	97.2
TE-8B	3/24	1443-1546	1.75	61.9	1.69	59.6	22	72	1.4	20.9	0.0	99.8
TE-9A	3/25	0820-0925	1.76	62.1	1.71	60.5	19	66	1.3	20.9	0.0	98.0
TE-9B	3/25	0821-0926	1.83	64.6	1.79	63.3	19	66	0.8	20.9	0.0	84.0
TE-10A	3/25	1016-1119	1.82	64.2	1.76	62.3	21	70	1.0	20.9	0.0	95.3
TE-10B	3/25	1017-1120	1.76	62.0	1.72	60.8	21	70	0.0	20.9	0.0	83.3
TE-11A	3/25	1332-1436	1.85	65.3	1.79	63.2	22	72	0.9	20.9	0.0	96.6
TE-11B	3/25	1333-1437	1.93	68.0	1.87	66.2	22	72	0.3	20.9	0.0	105.3
TE-12A	3/25	1511-1616	1.85	65.3	1.79	63.2	22	72	1.0	20.9	0.0	96.7
TE-12B	3/25	1512-1617	1.83	64.5	1.76	62.3	22	72	1.1	20.9	0.0	103.1
TE-13A	3/26	0829-0949	1.78	62.8	1.71	60.5	22	72	1.3	20.9	0.0	101.8
TE-13B	3/26	0830-0950	1.78	62.8	1.71	60.5	22	72	1.4	20.9	0.0	99.1
TE-14A	3/26	1022-1127	1.81	63.8	1.74	61.6	22	72	1.2	20.9	0.0	101.7
TE-14B	3/26	1023-1128	1.78	62.8	1.72	60.6	22	72	1.1	20.9	0.0	99.5

(continued). . .

TABLE 3.8. (continued) SUMMARY OF FLUE GAS CONDITIONS

Run No.	Date (1986)	Test Time 24 h clock	Volumetric Flow Rate				Stack Temperature		Moisture %	O_2 %	CO_2 %	Isokinetic %
			Actual[a]		Standard[b]							
			acmh $\times 10^3$	acfh $\times 10^3$	dscmh $\times 10^3$	dscfh $\times 10^3$	°C	°F				
No. 6 Plating Tank Mist Eliminator Outlet												
MO-5A	3/26	0831-1054	12.2	432	11.8	417	24	75	0.4	20.9	0.0	99.9
MO-5B	3/26	0834-1055	12.2	430	11.7	412	24	75	1.1	20.9	0.0	98.8
MO-6A	3/26	1150-1356	12.2	430	11.6	411	26	78	0.9	20.9	0.0	99.6
MO-6B	3/26	1151-1357	11.7	412	11.1	393	25	77	1.2	20.9	0.0	98.5
MO-7A	3/26	1408-1628	12.3	436	11.7	415	27	80	0.7	20.9	0.0	98.9
MO-7B	3/26	1409-1629	12.4	438	11.7	415	27	80	1.5	20.9	0.0	100.4

[a]Volumetric flow rate in actual cubic meters per hour (acmh) and actual cubic feet per hour (acfh) at stack conditions.
[b]Volumetric flow rate in dry standard cubic meters per hour (dscmh) and dry standard cubic feet per hour (dscfh).

TABLE 3.9. SUMMARY OF HEXAVALENT CHROMIUM AND TOTAL CHROMIUM EMISSIONS

Run No.	Date (1986)	Hexavalent Chromium				Total Chromium			
		concentration		mass emissions		concentration		mass emissions	
		mg/dscm	gr/dscf x 10^{-3}	kg/h x 10^{-3}	lb/h x 10^{-3}	mg/dscm	gr/dscf x 10^{-3}	kg/h x 10^{-3}	lb/h x 10^{-3}
No. 5 Plating Tank Exhaust									
TE-1A	3/18	2.302	1.006	3.88	8.55	2.234	0.976	3.77	8.30
TE-1B	3/18	2.104	0.919	3.59	7.91	2.063	0.901	3.52	7.75
TE-2A	3/18	2.122	0.929	3.63	8.00	2.064	0.902	3.53	7.78
TE-2B	3/18	1.766	0.772	2.98	6.56	1.745	0.763	2.94	6.49
TE-3A	3/18	2.217	0.969	3.89	8.57	2.173	0.950	3.81	8.40
TE-3B	3/18	1.697	0.741	2.95	6.51	1.676	0.732	2.92	6.44
TE-4A	3/19	2.441	1.067	4.10	9.04	2.390	1.044	4.02	8.85
TE-4B	3/19	1.761	0.769	2.92	6.44	1.773	0.775	2.94	6.48
TE-5A*	3/19	2.437	1.065	4.30	9.47	2.431	1.062	4.29	9.45
TE-5B*	3/19	1.766	0.772	3.04	6.71	1.723	0.753	2.97	6.55
TE-6A	3/19	2.380	1.040	4.04	8.91	2.395	1.047	4.07	8.97
TE-6B	3/19	2.065	0.903	3.35	7.38	2.065	0.903	3.35	7.38
TE-7A	3/24	4.405	1.925	7.77	17.12	4.167	1.821	7.35	16.20
TE-7B	3/24	4.035	1.763	7.19	15.86	4.012	1.753	7.15	15.76
TE-8A	3/24	2.750	1.202	4.78	10.54	2.265	1.165	4.63	10.21
TE-8B	3/24	2.823	1.234	4.77	10.51	2.987	1.305	5.04	11.12
TE-9A	3/25	2.367	1.034	4.06	8.95	2.287	0.999	3.92	8.64
TE-9B	3/25	2.836	1.239	5.08	11.20	2.730	1.193	4.89	10.78 **
TE-10A	3/25	2.500	1.092	4.41	9.72	2.381	1.040	4.20	9.26
TE-10B	3/25	3.918	1.712	6.74	14.86	3.957	1.729	6.81	15.01 **
TE-11A	3/25	4.150	1.813	7.43	16.37	4.064	1.776	7.27	16.04
TE-11B	3/25	3.762	1.644	7.06	15.56	3.786	1.654	7.10	16.66
TE-12A	3/25	4.274	1.868	7.64	16.85	4.133	1.806	7.39	16.30
TE-12B	3/25	4.129	1.804	7.28	16.05	4.063	1.776	7.16	15.79
TE-13A	3/26	4.848	2.119	8.31	18.32	4.817	2.105	8.26	18.20
TE-13B	3/26	3.602	1.574	6.17	13.60	3.522	1.539	6.03	13.30
TE-14A	3/26	3.744	1.636	6.53	14.39	3.606	1.576	6.29	13.86
TE-14B	3/26	3.314	1.448	5.69	12.54	3.119	1.363	5.35	11.80
No. 6 Plating Tank Mist Eliminator Outlet									
MO-5A	3/26	0.221	0.096	2.60	5.74	0.212	0.093	2.50	5.52
MO-5B	3/26	0.218	0.095	2.55	5.61	0.205	0.090	2.39	5.28
MO-6A	3/26	0.366	0.160	4.25	9.38	0.349	0.153	4.06	8.95
MO-6B	3/26	0.191	0.084	2.13	4.69	0.194	0.085	2.16	4.76
MO-7A	3/26	0.262	0.115	3.08	6.79	0.250	0.109	2.94	6.47
MO-7B	3/26	0.215	0.094	2.53	5.57	0.210	0.092	2.46	5.42

* Results revised due to a likely labeling error.

** Results not considered valid due to dry gas meter loss of calibration.

3.6.1 Sample Train Collection Efficiency and Evaluation of Hexavalent Chromium Conversion to Trivalent Chromium - The first six paired sample runs (TE-1A through TE-6B, as shown in Table 3.9) were run in one exhaust duct on Tank No. 5, to evaluate both the collection efficiency of the impinger train (ability to quantitatively collect both hexavalent and total chromium) and to examine the potential for conversion of hexavalent chromium to trivalent chromium in solution after collection. The results of a previous test had shown an appreciable amount of trivalent chromium, which suggested a possibility of conversion during sample collection and/or storage. One of the paired trains (Train A) had 0.1N NaOH in the impingers and the sample was recovered into 4 separate sample jars as follows: 1) fronthalf rinse and first impinger contents, 2) second impinger contents and rinse, 3) third impinger contents and rinse, and 4) backup Teflon filter. The results in Table 3.10 show that about 99% of both the hexavalent and total chromium was collected in the fronthalf (nozzle and probe) and first impinger. By the time the flue gas had passed through the last impinger, an average of 99.9% of the chromium had been removed. Since the amount collected in the last impinger averaged less than one percent, the impinger train is considered to be acceptable with respect to collection efficiency (sample collected and recovered). Also, the results indicate that it is not necessary to have a backup Teflon filter.

The second evaluation was the check on possible conversion of hexavalent chromium to trivalent chromium. In conducting this evaluation, the other paired sample train (Train B) was used. In this case, the impingers were charged with distilled water. Immediately upon completion of the sample recovery from the train, NaOH was added to half of the sample to produce approximately a 0.1N NaOH solution. These samples were then stored for 28 days and subsequently analyzed for hexavalent and trivalent chromium. Results are shown in Table 3.11.

The other halves of the samples containing distilled water only were to be analyzed for hexavalent chromium within 24 hours of sample collection. Due to an inadvertant error, the distilled water samples from only the first three runs were analyzed for hexavalent chromium within 24 hours, as planned. All six distilled water samples along with the six samples with NaOH added were analyzed as planned 28 days after initial sample collection (see Table 3.11). The results for the paired train which had NaOH in the

FILTER
OPTIONAL
!

TABLE 3.10. SAMPLE TRAIN (IMPINGER) COLLECTION EFFICIENCY

Date (1986)	Run No.	Sample Catch and Collection Efficiency						
		1st Imp. Catch, ug	% of Total	2nd Imp. Catch, ug	% of Total	3rd Imp. Catch, ug	% of Total	Filter Catch, ug
Hexavalent Chromium								
3/18	TE-1A	2,764	99.9	< 4	99.9	< 4	99.9	2.0
3/18	TE-2A	2,480	99.6	10.4	100	< 4	100	< 2
3/18	TE-3A	2,750	99.3	13	99.8	5	100	< 2
3/19	TE-4A	2,790	99.0	20	99.7	9	100	< 2
3/19	TE-5A	2,050	93.6	96	98.0	35	99.6	9
3/19	TE-6A	2,680	98.3	22	99.1	24	100	< 2
Total Chromium								
3/18	TE-1A	2,680	99.8	< 2	99.8	< 2	99.8	5.5
3/18	TE-2A	2,420	99.9	< 2	99.9	< 2	99.9	2.0
3/18	TE-3A	2,700	99.5	13.6	100	< 2	100	< 2
3/19	TE-4A	2,740	99.3	13	99.7	7	100	< 2
3/19	TE-5A	2,000	93.6	88	97.7	32	99.2	17
3/19	TE-6A	2,700	98.4	20	99.2	23	100	< 2

TABLE 3.11. EVALUATION OF HEXAVALENT TO TRIVALENT CHROMIUM CONVERSION BOTH DURING AND AFTER SAMPLE COLLECTION

Run No.	Sample Train A	Emission Rate, lb/hr x 10-3 (Train B)				Between Train Difference, %		
		Distilled Water Halves		Difference, %	NaOH Halves	Distilled Water Halves		NaOH Halves
		1st Analysis	2nd Analysis			1st Analysis	2nd Analysis	
Hexavalent Chromium								
TE-1	8.55	7.67	7.40	-3.5	7.91	-10.3	-13.5	-7.5
TE-2	8.00	6.33	6.33	0	6.56	-20.9	-20.9	-18.0
TE-3	8.57	6.46	6.57	+1.7	6.51	-24.6	-23.3	-24.0
TE-4	9.04	-	6.19	-	6.44	-	-31.5	-28.8
TE-5	9.47*	-	8.24	-	6.71*	-	-13.0	-29.1
TE-6	8.91	-	8.15	-	7.38	-	-8.5	-17.2
Total Chromium								
TE-1	8.30	-	7.73	-	7.75	-	-6.9	-6.6
TE-2	7.78	-	6.49	-	6.49	-	-16.6	-16.6
TE-3	8.40	-	6.89	-	6.44	-	-18.0	-23.3
TE-4	8.85	-	6.44	-	6.48	-	-27.2	-26.8
TE-5	9.45*	-	8.55	-	6.55*	-	-9.5	-30.7
TE-6	8.97	-	8.11	-	7.38	-	-9.6	-17.7

*Sample labeling error suspected and numbers originally reversed.

impingers during testing (Train A) are also shown in Table 3.11. The results of the analysis of the distilled water halves showed no significant difference between the first analysis and the second analysis conducted 28 days later. The results of the distilled water samples when compared to the split samples with NaOH added also showed no significant differences, again suggesting that conversion over time is not a problem. The between train results (comparison of Train A results to Train B results) do indicate that a significant amount of chromium is unaccounted for when only water is used in the impingers during testing.

3.6.2 Evaluation of the Method 5 Sample Train for Collection of Chromium - The use of the Method 5 sample train for collecting both hexavalent and total chromium emissions from a chrome plating operation with very low chromium concentrations had, in an earlier study, proved to be questionable. To determine the suittability of data obtained using EPA Method 5 from points sources with moderate to high chromium concentrations, paired sample runs were conducted both at the Tank No. 5 exhaust and the Tank No. 6 mist eliminator outlet. One sample train (Train A) used impingers only for sample collection and the other was a standard Method 5 train with filter. This was done to evaluate the collection of chromium at two concentration levels. The results are shown in Table 3.12 and 3.13. Train A represents the impinger train results and the Train B represents the Method 5 train results. At the uncontrolled emission levels (Tank No. 5 exhaust) with a Cr^{+6} concentration of about 3 mg/dscm, it appears that about 99% of the emissions are collected by the fronthalf of the Method 5 (front filter) train. However, when the Method 5 sample train is compared with the impinger train, it appears that about 10% of the emissions are not recoverable from the train. It is likely that this material gets caught in the frit and then cannot be recovered. The results are, however, relatively similar at these higher levels and any data collected at uncontrolled emission levels using the Method 5 train should be acceptable for data comparisons. There was a problem with the dry gas meter during runs TE-9A and TE-10B and the runs are not considered valid.

The second comparison was conducted on controlled emissions with a concentration of about 0.2 mg/dscm. As shown in Table 3.13, the Method 5 train showed less percent recovery in the fronthalf with about 98%. The comparison of the Method 5 and impinger trains at these lower concentration

USE
N_2CH
INSTEAD
OF
H_2O
!

TABLE 3.12. METHOD 5 TYPE SAMPLE TRAIN COLLECTION EFFICIENCY AND COMPARISON WITH IMPINGER TYPE SAMPLE TRAIN

Run No.	Date (1986)	Analytical Results, ug								Emission Rate	
		Front Rinse	Front Filter	Front Total	% of Total	Frit Rinse	Impinger Contents	Back Filter	Total	lb/hr x 10^{-3}	Difference Percent
					Hexavalent Chromium						
TE-7A	3/24	-	-	-	-	-	5,550	< 2	5,550	16.20	-
TE-7B	3/24	4,210	981	5,191	99.9	3	< 6	-	5,194	15.76	-2.7
TE-8A	3/24	-	-	-	-	-	3,250	< 2	3,250	10.21	-
TE-8B	3/24	2,650	551	3,201	98.1	< 2	61	-	3,262	11.12	+8.9
TE-9A	3/25	-	-	-	-	-	2,950	< 2	2,950	8.64	-
TE-9B	3/25	2,700	442	3,142	100	< 4	< 8	-	3,142	9.06	*
TE-10A	3/25	-	-	-	-	-	2,940	< 2	2,940	9.26	-
TE-10B	3/25	3,580	249	3,829	99.5	< 3	20	-	3,849	12.50	*
TE-11A	3/25	-	-	-	-	-	5,320	< 2	5,320	16.04	-
TE-11B	3/25	4,892	582	5,474	100	< 3	< 8	-	5,474	16.66	+3.7
TE-12A	3/25	-	-	-	-	-	5,170	< 2	5,170	16.30	-
TE-12B	3/25	1,070	510	1,580	**	5	3,560	-	5,140	15.79	-3.1
TE-13A	3/26	-	-	-	-	-	6,270	< 2	6,270	18.20	-
TE-13B	3/26	3,960	520	4,480	99.5	< 4	23	-	4,503	13.30	-26.9
TE-14A	3/26	-	-	-	-	-	4,890	< 2	4,890	13.86	-
TE-14B	3/26	3,470	395	3,865	99.6	4	12	-	3,881	11.80	-14.7

* Results not shown due to the problem with the dry gas meter calibration on these runs.

** Apparently, the fronthalf train rinse was combined with the impinger contents during cleanup.

levels showed a greater difference than at the higher concentration levels. In general, the impinger train measured emission levels about 25% greater than the Method 5 train. The chromium data previously collected using the Method 5 train on controlled emissions at these levels could be considered valid if the results were increased slightly. However, if the concentrations measured are substantially below 0.2 ug/dscm, the data suggests that the EPA Method 5 results may be questionable.

3.6.3 Methods Evaluation Conclusions - The combination of the impinger train with 0.1N NaOH as the reagent for sample collection and the EPA draft method for hexavalent chromium analysis proved acceptable as the EPA Reference Method for sampling and analysis of hexavalent chromium. Although the reference trains were not run in pairs, the data clearly demonstrates that this sampling and analytical method has very good precision, and the analysis of the quality assurance samples shows (as with previous tests) that the method has good accuracy. The precision seems to be very similar to that shown for EPA Method 5.

Based on these studies, no further evaluation of this method needs to be made at chromium concentrations equal to or greater than those evaluated.

3.6.4 Summary of Analytical Results for Methods Evaluation Runs - The summary of the analytical results for hexavalent and total chromium for all samples collected for methods evaluation purposes is shown in Table 3.14. The results shown in Table 3.14 for hexavalent chromium are the results obtained by the EPA tentative method for "Determination of Hexavalent Chromium Emissions from Stationary Sources" and the results for total chromium are results obtained by analyzing an aliquot of the liquid sample for total chromium by Inductively-Coupled Argon Plasmography (ICP). When the total chromium sample shows "Residue" as the amount of sample analyzed, then the filter residue was analyzed by ICP and these results were added to the results for hexavalent chromium to give the total chromium results.

The Quality Assurance audit samples for these results are the same as for the standards setting runs and are shown in the Quality Assurance Section 5.0.

TABLE 3.13. METHOD 5 TYPE SAMPLE TRAIN COLLECTION EFFICIENCY AND COMPARISON WITH IMPINGER TYPE SAMPLE TRAIN

Run No.	Date (1986)	Analytical Results, ug								Emission Rate	
		Front Rinse	Front Filter	Front Total	% of Total	Frit Rinse	Impinger Contents	Back Filter	Total	lb/hr x 10^{-3}	Difference Percent
Hexavalent Chromium											
MO-5A	3/26	-	-	-	-	-	897	< 1	897	17.79	-
MO-5B	3/26	757	26	783	99.1	< 3	7	-	790	17.38	-2.3
MO-6A	3/26	-	-	-	-	-	1,460	< 2	1,460	29.05	-
MO-6B	3/26	720	9	729	98.6	3	7	-	739	14.54	-49.9
MO-7A	3/26	-	-	-	-	-	1,050	< 2	1,050	21.05	-
MO-7B	3/26	767	< 1	767	96.2	< 3	30	-	797	17.26	-18.0
Total Chromium											
MO-5A	3/26	-	-	-	-	-	862	< 1	862	17.09	-
MO-5B	3/26	707	36	743	100	< 2	< 4	-	743	16.35	-4.3
MO-6A	3/26	-	-	-	-	-	1,380	13	1,393	27.72	-
MO-6B	3/26	733	9	742	98.9	2	6	-	750	14.76	-46.8
MO-7A	3/26	-	-	-	-	-	1,000	< 1	1,000	20.05	-
MO-7B	3/26	754	< 2	754	97.2	< 2	22	-	776	16.81	-16.2

TABLE 3.14. SUMMARY OF "A" AND "B" TRAIN ANALYTICAL RESULTS FOR HEXAVALENT AND TOTAL CHROMIUM

Run No.	Date (1986)	Sample Type	Sample No. Analyzed	Hexavalent Chromium Results, ug	Amount of Sample Analyzed	Total Chromium Results, ug
			No. 5 Plating Tank Exhaust			
TE-1A	3/18	1st Impinger NaOH	G-1	2,764	Total	2,680
"	"	2nd Impinger NaOH	G-2	< 4	Total	< 2
"	"	3rd Impinger NaOH	G-3	< 4	Total	< 2
"	"	Teflon Filter	G-4	2.0	Residue	5.5
TE-2A	3/18	1st Impinger NaOH	G-5	2,480	Total	2,420
"	"	2nd Impinger NaOH	G-6	10.4	Total	< 2
"	"	3rd Impinger NaOH	G-7	< 4	Total	< 4
"	"	Teflon Filter	G-8	< 2	Residue	2.0
TE-3A	3/18	1st Impinger NaOH	G-9	2,750	Total	2,700
"	"	2nd Impinger NaOH	G-10	13.0	Total	13.6
"	"	3rd Impinger NaOH	G-11	5.0	Total	< 2
"	"	Teflon Filter	G-12	< 2	Residue	< 2
TE-4A	3/19	1st Impinger NaOH	G-13	2,790	Total	2,740
"	"	2nd Impinger NaOH	G-14	20	Total	13
"	"	3rd Impinger NaOH	G-15	9	Total	7
"	"	Teflon Filter	G-16	< 2	Residue	< 2
TE-5A	3/19	1st Impinger NaOH	G-17	2,050	Total	2,000
"	"	2nd Impinger NaOH	G-18	96	Total	88
"	"	3rd Impinger NaOH	G-19	35	Total	32
"	"	Teflon Filter	G-20	9	Residue	17
TE-6A	3/19	1st Impinger NaOH	G-21	2,680	Total	2,700
"	"	2nd Impinger NaOH	G-22	22	Total	20
"	"	3rd Impinger NaOH	G-23	24	Total	23
"	"	Teflon Filter	G-24	< 2	Residue	< 2

(continued). . .

TABLE 3.14. (continued) SUMMARY OF "A" AND "B" TRAIN ANALYTICAL RESULTS FOR HEXAVALENT AND TOTAL CHROMIUM

Run No.	Date (1986)	Sample Type	Sample No. Analyzed	Hexavalent Chromium Results, ug	Amount of Sample Analyzed	Total Chromium Results, ug
			No. 5 Plating Tank Exhaust			
TE-7A	3/24	Impinger NaOH	G-25	5,550	Total	5,250
"	"	Teflon Filter	G-26	< 2	Residue	< 2
TE-8A	3/24	Impinger NaOH	G-27	3,250	Total	3,150
"	"	Teflon Filter	G-28	< 2	Residue	< 2
TE-9A	3/25	Impinger NaOH	G-29	2,950	Total	2,850
"	"	Teflon Filter	G-30	< 2	Residue	< 2
TE-10A	3/25	Impinger NaOH	G-31	2,940	Total	2,800
"	"	Teflon Filter	G-32	< 2	Residue	< 2
TE-11A	3/25	Impinger NaOH	G-33	5,320	Total	5,210
"	"	Teflon Filter	G-34	< 2	Residue	< 2
TE-12A	3/25	Impinger NaOH	G-35	5,170	Total	5,000
"	"	Teflon Filter	G-36	< 2	Residue	< 2
TE-13A	3/26	Impinger NaOH	G-37	6,270	Total	6,230
"	"	Teflon Filter	G-38	< 2	Residue	< 2
TE-14A	3/26	Impinger NaOH	G-39	4,890	Total	4,710
"	"	Teflon Filter	G-40	< 2	Residue	< 2
			No. 6 Plating Tank Mist Eliminator Outlet			
MO-5A	3/26	Impinger NaOH	G-99	897	Total	862
"	"	Teflon Filter	G-100	< 1	Residue	< 1
MO-6A	3/26	Impinger NaOH	G-105	1,460	Total	1,380
"	"	Teflon Filter	G-106	< 2	Residue	12.9
MO-7A	3/26	Impinger NaOH	G-111	1,050	Total	1,000
"	"	Teflon Filter	G-112	< 2	Residue	< 2

(continued). . .

TABLE 3.14. (continued) SUMMARY OF "A" AND "B" TRAIN ANALYTICAL RESULTS FOR HEXAVALENT AND TOTAL CHROMIUM

Run No.	Date (1986)	Sample Type	Sample No. Analyzed	Hexavalent Chromium Results, ug	Amount of Sample Analyzed	Total Chromium Results, ug
			No. 5 Plating Tank Exhaust			
TE-1B	3/18	Imping. 1st Split DI	G-41	2,566/2,473*	Total	2,574
"	"	Imping. 2nd Split NaOH	G-42	2,644	Total	2,582
"	"	Teflon Filter	G-43	< 2	Residue	10
TE-2B	3/18	Imping. 1st Split DI	G-44	2,018/2,018*	Total	2,065
"	"	Imping. 2nd Split NaOH	G-45	2,093	Total	2,065
"	"	Teflon Filter	G-46	< 1	Residue	4
TE-3B	3/18	Imping. 1st Split DI	G-47	2,201/2,236*	Total	2,340
"	"	Imping. 2nd Split NaOH	G-48	2,218	Total	2,184
"	"	Teflon Filter	G-49	< 1	Residue	7
TE-4B	3/19	Imping. 1st Split DI	G-50	2,093	Total	2,175
"	"	Imping. 2nd Split NaOH	G-51	2,175	Total	2,190
"	"	Teflon Filter	G-52	< 1	Residue	< 1
TE-5B	3/19	Imping. 1st Split DI	G-53	2,907	Total	3,018
"	"	Imping. 2nd Split NaOH	G-54	3,342	Total	3,334
"	"	Teflon Filter	G-55	< 1	Residue	< 1
TE-6B	3/19	Imping. 1st Split DI	G-56	2,703	Total	2,690
"	"	Imping. 2nd Split NaOH	G-57	2,445	Total	2,445
"	"	Teflon Filter	G-58	< 1	Residue	< 1
TE-7B	3/24	Imping. NaOH	G-59	< 6	Total	< 6
"	"	Fronthalf Rinse NaOH	G-60	4,210	Total	4,060
"	"	Frit Rinse NaOH	G-61	3	Total	< 2
"	"	Glass Filter	G-62	981	Residue	1,104

(continued). . .

* Represents the analysis conducted on day 1 and day 28 on the same sample.

TABLE 3.14. (continued) SUMMARY OF "A" AND "B" TRAIN ANALYTICAL RESULTS FOR HEXAVALENT AND TOTAL CHROMIUM

Run No.	Date (1986)	Sample Type	Sample No. Analyzed	Hexavalent Chromium Results, ug	Amount of Sample Analyzed	Total Chromium Results, ug
			No. 5 Plating Tank Exhaust			
TE-8B	3/24	Impinger NaOH	G-63	61	Total	50
"	"	Fronthalf Rinse NaOH	G-64	2,650	Total	2,610
"	"	Frit Rinse NaOH	G-65	< 2	Total	< 2
"	"	Glass Filter	G-66	551	Residue	992
TE-9B	3/25	Impinger NaOH	G-67	< 8	Total	7
"	"	Fronthalf Rinse NaOH	G-68	2,700	Total	2,530
"	"	Frit Rinse NaOH	G-69	< 4	Total	< 4
"	"	Glass Filter	G-70	442	Residue	488
TE-10B	3/25	Impinger NaOH	G-71	20	Total	13
"	"	Fronthalf Rinse NaOH	G-72	3,580	Total	3,600
"	"	Frit Rinse NaOH	G-73	< 3	Total	< 3
"	"	Glass Filter	G-74	249	Residue	274
TE-11B	3/25	Impinger NaOH	G-75	< 8	Total	5
"	"	Fronthalf Rinse NaOH	G-76	4,892	Total	4,845
"	"	Frit Rinse NaOH	G-77	< 3	Total	2
"	"	Glass Filter	G-78	582	Residue	656
TE-12B	3/25	Impinger NaOH	G-79	3,560	Total	3,440
"	"	Fronthalf Rinse NaOH	G-80	1,070	Total	1,040
"	"	Frit Rinse NaOH	G-81	5	Total	8
"	"	Glass Filter	G-82	510	Residue	575
TE-13B	3/26	Impinger NaOH	G-83	23	Total	18
"	"	Fronthalf Rinse NaOH	G-84	3,960	Total	3,790
"	"	Frit Rinse NaOH	G-85	< 4	Total	< 4
"	"	Glass Filter	G-86	520	Residue	595
TE-14B	3/26	Impinger NaOH	G-87	12	Total	< 4
"	"	Fronthalf Rinse NaOH	G-88	3,470	Total	3,210
"	"	Frit Rinse NaOH	G-89	4	Total	< 2
"	"	Glass Filter	G-90	395	Residue	443

(continued). . .

TABLE 3.14. (continued) SUMMARY OF "A" AND "B" TRAIN ANALYTICAL RESULTS FOR HEXAVALENT AND TOTAL CHROMIUM

Run No.	Date (1986)	Sample Type	Sample No. Analyzed	Hexavalent Chromium Results, ug	Amount of Sample Analyzed	Total Chromium Results, ug
		No. 6 Plating Tank Mist Eliminator Outlet				
MO-5B	3/26	Impinger NaOH	G-101	7	Total	< 4
"	"	Fronthalf Rinse NaOH	G-102	757	Total	707
"	"	Frit Rinse NaOH	G-103	< 3	Total	< 3
"	"	Glass Filter	G-104	26	Residue	36
MO-6B	3/26	Impinger NaOH	G-107	7	Total	6
"	"	Fronthalf Rinse NaOH	G-108	720	Total	733
"	"	Frit Rinse NaOH	G-109	3	Total	2
"	"	Glass Filter	G-110	9	Residue	9
MO-7B	3/26	Impinger NaOH	G-113	30	Total	22
"	"	Fronthalf Rinse NaOH	G-114	767	Total	754
"	"	Frit Rinse NaOH	G-115	< 3	Total	< 2
"	"	Glass Filter	G-116	< 1	Residue	< 1

4.0 SAMPLING LOCATIONS AND TEST METHODS

This section describes the sampling locations and test methods used to characterize emissions from hard chromium plating tank No. 6 at the Greensboro Industrial Platers' facility in Greensboro, North Carolina. It also includes a section describing the testing location, sampling procedures, and analytical techniques used in the methods development testing conducted in one of the exhaust ducts from plating tank No. 5. Three sampling locations were used in the emissions testing program: the inlet and outlet of the No. 6 plating tank mist eliminator and the No. 5 plating tank exhaust duct. At the No. 6 plating tank mist eliminator inlet and outlet, emissions testing was performed for hexavalent chromium content, total chromium content, and chromium distribution with respect to particle size distribution. At the No. 5 plating tank exhaust, emissions testing was performed for hexavalent chromium content and total chromium content only. From the No. 6 plating tank, grab samples of the anode, cathode, and bath solutions were collected for hexavalent and total chromium analysis. Grab samples were also collected from the No. 6 rinse tank for hexavalent and total chromium analysis. The relative positions and the type of testing conducted at each location are shown in a simplified process flow diagram (see Figure 4-1) and accompanying Table 4.1. The subsections which follow further describe each sampling location and applicable test methods.

4.1 NO. 6 PLATING TANK MIST ELIMINATOR INLET (TEST LOCATION A)

Hexavalent chromium, total chromium, and chromium distribution with respect to particle size distribution were measured at the inlet of the mist eliminator on tank No. 6, as shown in Figure 4-2. One sampling port was installed on the side of the horizontal circular duct (24.75 inches in diameter). This port was located 9 inches (0.40 duct diameters) upstream from a bend in the duct to the scrubber and 8 inches (0.35 duct diameters) downstream from an expansion in the duct. Because of the close proximity of flow disturbances, this location did not meet EPA Method 1 sampling requirements; however, there was no other location available for inlet testing. Prior to testing, a cyclonic flow check was performed to determine if any cyclonic flow existed at the sampling location. An average yaw angle of 9.5° was measured, indicating an acceptable sampling location with respect to EPA Method 1 requirements.

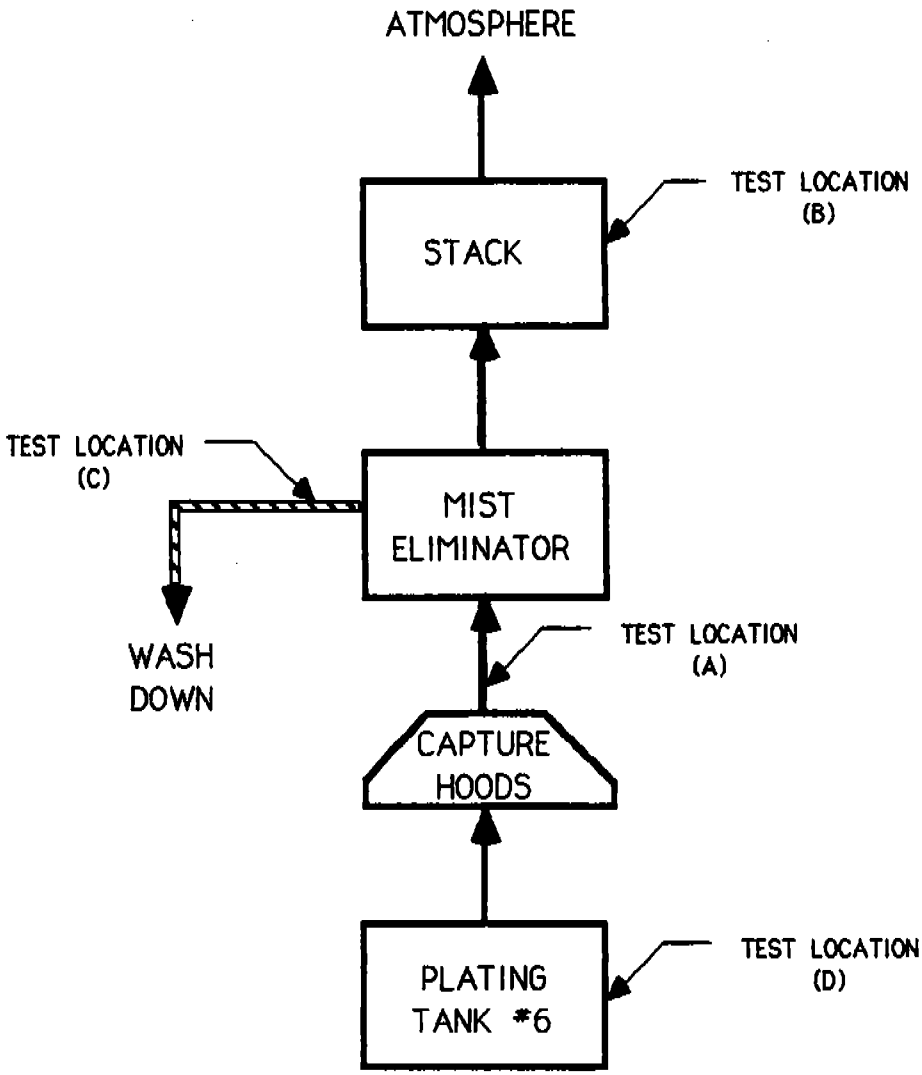

FIGURE 4-1. PROCESS AIR FLOW SCHEMATIC, PLATING TANK #6 AND CONTROL EQUIPMENT SHOWING TEST LOCATIONS.

TABLE 4.1. SAMPLING PLAN FOR GREENSBORO INDUSTRIAL PLATERS

Sample Type	Sampling Locations	Number of Samples	Methods*
Standards Setting			
Hexavalent Cr	A & B	4 each	Method 13-Type Impinger Train & Tentative Method for Hexavalent Cr
Total Cr	A & B	4 each	Method 13-Type Impinger Train & EPA Protocol for Total Cr
Hexavalent & Total Cr	C D E	11 grab 3 sets of 4 grab 2 grab	Tentative EPA Method for Hexavalent Cr & ICP
Particle Sizing			
Hexavalent & Total Cr Distribution by Particle Size	A & B	3 each	Impactor using Tentative EPA Method for Hexavalent Cr & ICP
Methods Development			
Hexavalent & Total Cr	B F	3 pairs 14 pairs	Various Paired Sampling Trains (see Appendix C) using Tentative EPA Method for Hexavalent Cr & ICP

* ICP: Inductively-Coupled Argon Plasmography

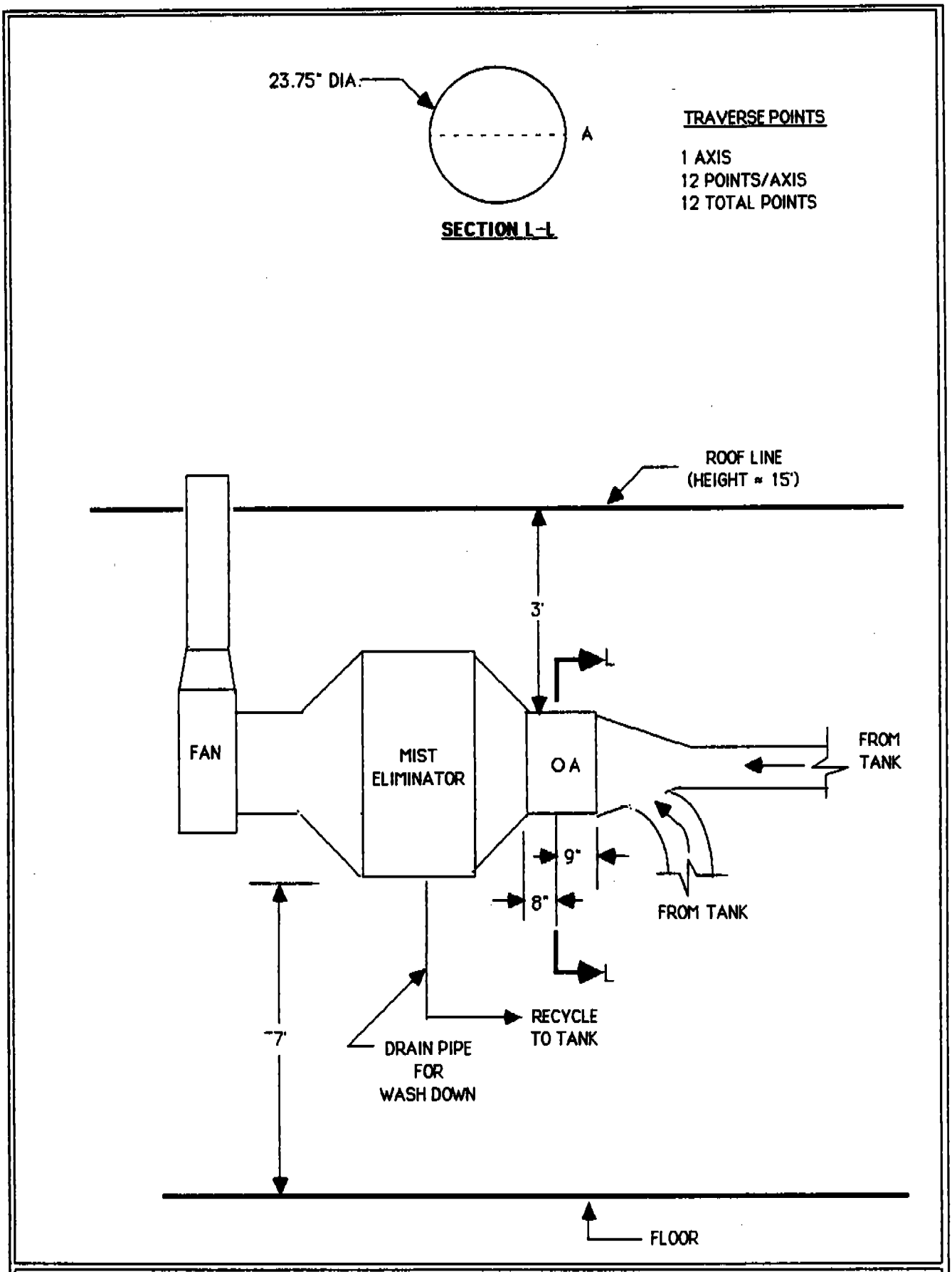

FIGURE 4-2. MIST ELIMINATOR INLET (TEST LOCATION A).

For the Method 13-type impinger train testing (refer to Appendix C for further discussion of sampling train and sample analysis procedures), sampling was conducted along two axes through the single port (labeled "A" in Figure 4-2). The axis perpendicular to the sampling port axis (labeled "B") was sampled by inserting the probe through the available port at a predetermined angle for a predetermined distance, both of which were calculated geometrically.

A total of 12 points were sampled for 5 minutes each on the "A" axis; however, only 6 points (see Figure 4-3) were sampled on the "B" axis due to the size of the port limiting the angle with which the probe could be inserted. Points 1 and 6 were sampled for 20 minutes each, while points 2 through 5 were sampled for 5 minutes each. The total test time for each run was 120 minutes. Each run was performed concurrently with the outlet testing.

For the particle size tests (including hexavalent and total chromium distribution by particle size) the first run of the three-run series was conducted at a sampling point representing the average velocity in the duct. To ensure consistent cut-sizes on the impactor plates, the remaining two runs were conducted at points having the same velocity as the first run. The three particle size runs ranged from 123 to 180 minutes in duration.

4.2 NO. 6 PLATING TANK MIST ELIMINATOR OUTLET (TEST LOCATION B)

Hexavalent chromium, total chromium, and chromium distribution with respect to particle size distribution were measured at the outlet of the No. 6 mist eliminator, as shown in Figure 4-4. Two sampling ports were installed 90° apart on the 13.5 inch diameter stack extension. The ports were located 36 inches (2.5 stack diameters) upstream from the stack exit and 89 inches (6.5 stack diameters) downstream from the expansion in the duct leading from the induction fan.

For the Method 13-type impinger train (refer to Appendix C for further discussion of sampling train and sample analysis procedures), a total of 16 points, as per Method 1, were sampled. Each point was sampled for 8 minutes for a total sampling time of 128 minutes.

For the particle size tests (including hexavalent and total chromium distribution by particle size) the first run of the three-run series was

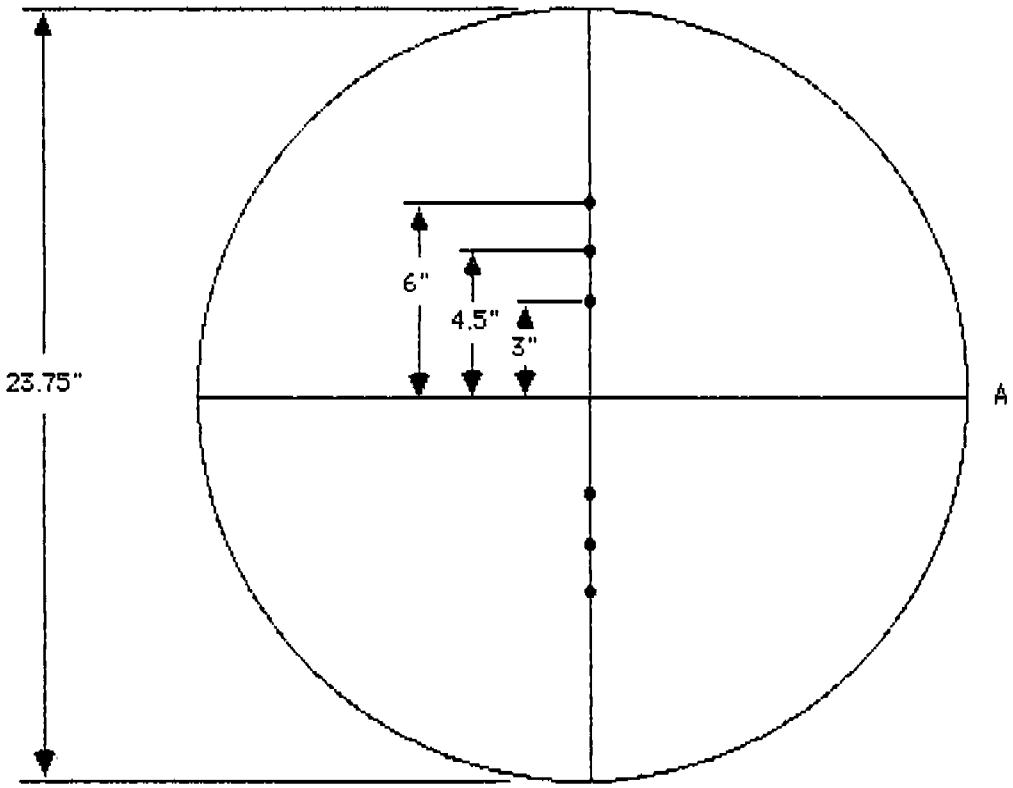

FIGURE 4-3. CROSS SECTION OF MIST ELIMINATOR INLET SHOWING LOCATIONS OF SIX POINTS TRAVERSED ON AXIS PERPENDICULAR TO SINGLE PORT.

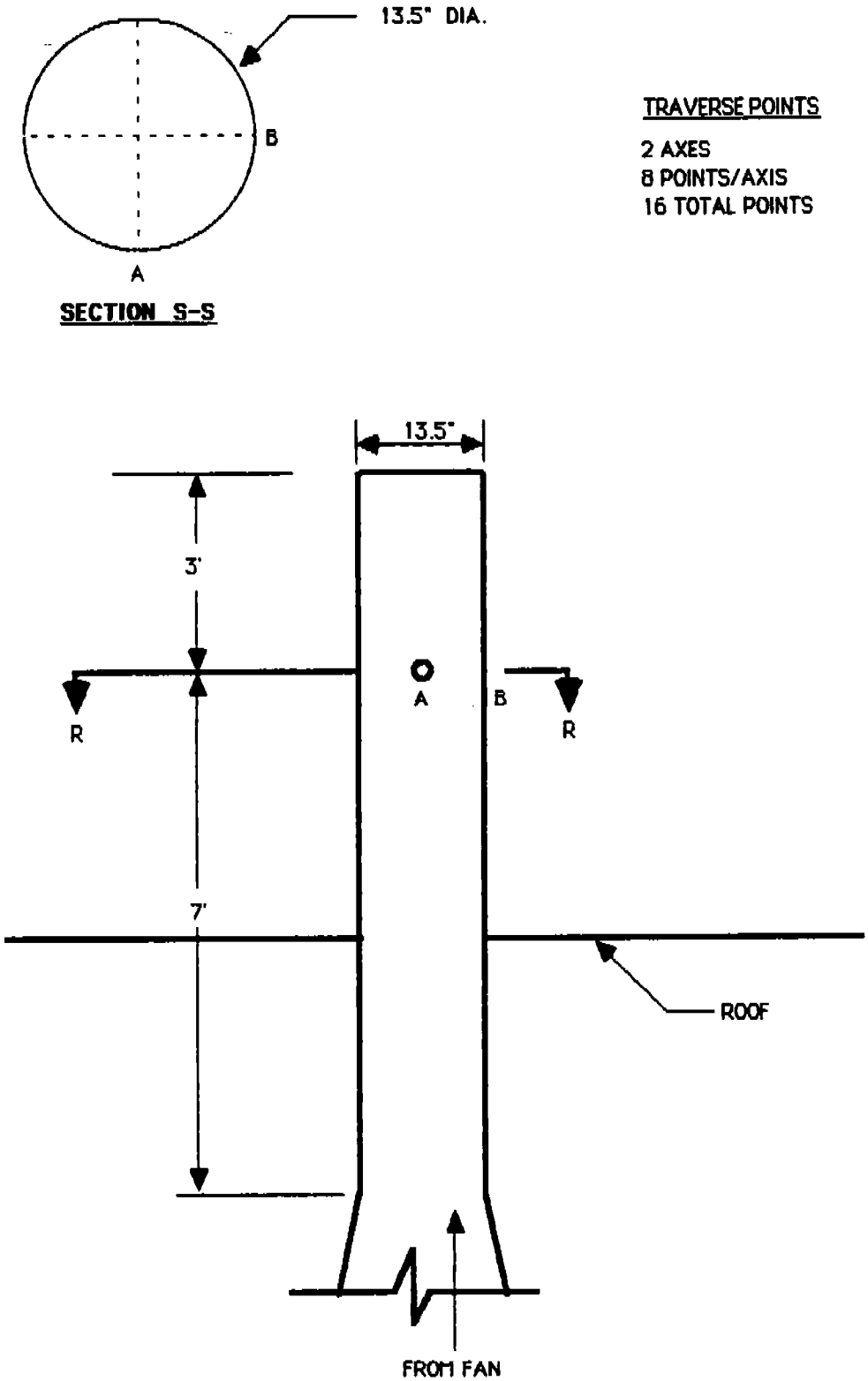

FIGURE 4-4. MIST ELIMINATOR OUTLET STACK (TEST LOCATION B).

conducted at a sampling point representing the average velocity in the duct. To ensure consistent cut-sizes on the impactor plates, the remaining two runs were conducted at points having the same velocity as the first run. The three particle size runs ranged from 123 to 240 minutes in duration.

4.3 NO. 6 PLATING TANK MIST ELIMINATOR WASH DOWN DRAIN PIPE (TEST LOCATION C)

During each day of sampling, grab samples were collected during the mist eliminator wash down cycles. The samples were collected by holding a sample jar beneath the drain pipe as the wash down cycle was in progress. Five samples were collected on March 18, three samples were collected on March 19, and three samples were collected on March 25. At the end of each day, the samples were combined into a single sample for analysis of hexavalent and total chromium content.

4.4 NO. 6 PLATING TANK ANODE, CATHODE, AND BATH SOLUTION (TEST LOCATION D)

During each set of runs, grab samples of the tank solution were collected near the anode area and the cathode area, and from the bath. The samples were collected at a point showing the most turbulence and bubbling. Each sample was analyzed for hexavalent and total chromium content.

4.5 NO. 6 PLATING TANK RINSE TANK (TEST LOCATION E)

During each day of sampling, a grab sample was collected from the rinse tank which supplies the water used to rinse off the parts as they are lifted from the No. 6 plating tank. The parts are rinsed directly over the plating tank. The samples were analyzed for hexavalent and total chromium content.

4.6 NO. 5 PLATING TANK EXHAUST (TEST LOCATION F)

Hexavalent and total chromium methods evaluation tests were conducted in one of the exhaust ducts coming off plating tank No. 5, as shown in Figure 4-5. Two sampling ports were installed side-by-side on the side of the angled circular duct (11.5 inches in diameter). The main port (A) was located 14 inches (1.22 duct diameters) upstream of a bend in the duct and 30 inches (2.61 duct diameters) downstream of another bend in the duct from the plating tank. Since the methods evaluation sampling was conducted at two "single points" it was not imperative that this location meet EPA Method 1 requirements.

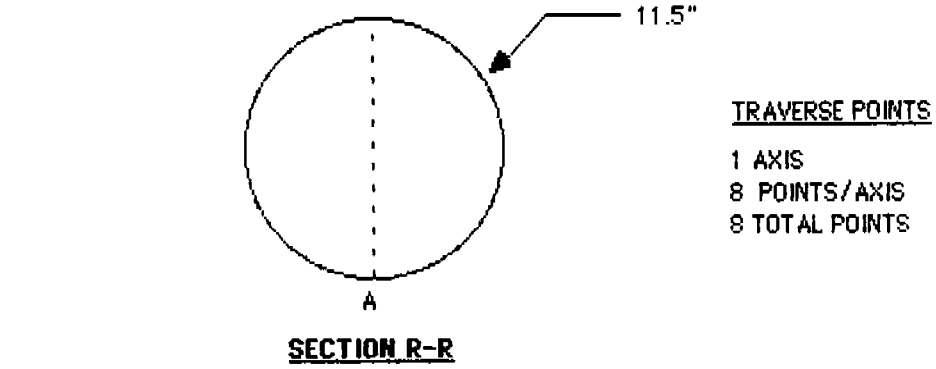

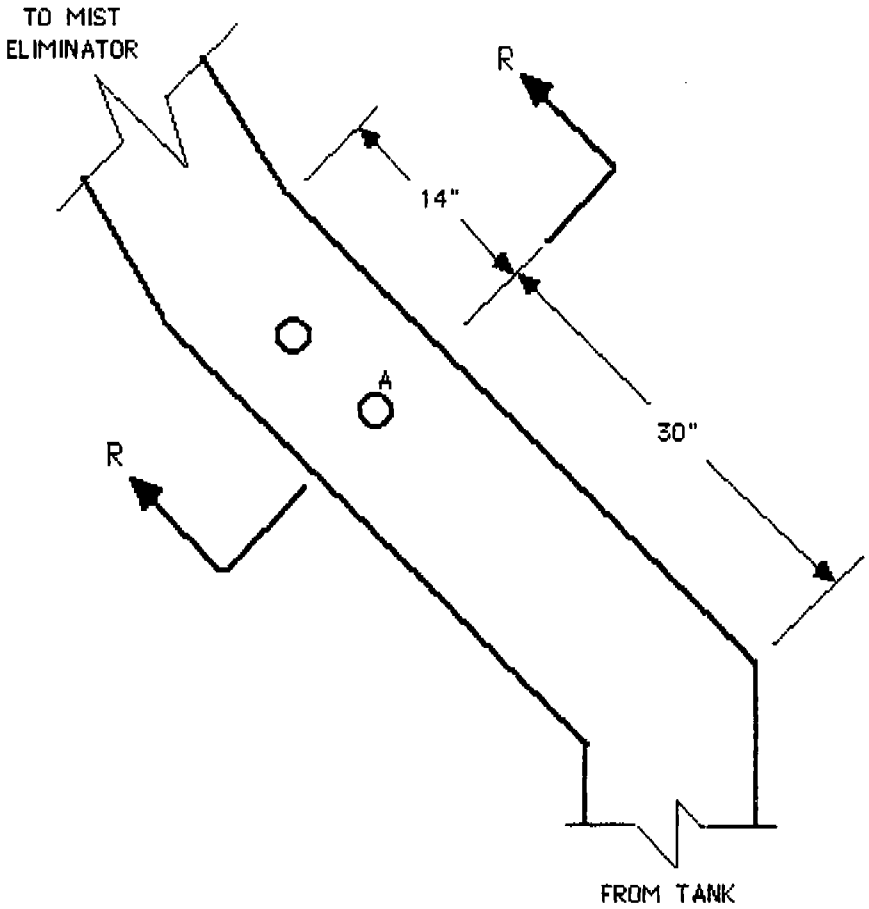

FIGURE 4-5. EXHAUST DUCT ON PLATING TANK #5 (METHODS DEVELOPMENT TEST LOCATION E).

For the method development testing (refer to Appendix C for a detailed discussion of the sampling trains and analytical procedures used), paired train sampling was conducted through the two ports. The nozzles of the two trains were staggered in the duct and halfway through each run the train and probe positions were reversed. The total test time for each run was 60 minutes.

4.7 VELOCITY AND TEMPERATURE

A type S pitot tube and magnehelic gauges were used to measure the gas velocity pressure (delta P). Velocity pressures were measured at each sampling point across the duct or stack to determine an average value according to the procedures outlined in Method 2. The temperature at each sampling point was measured using a thermocouple and digital readout.

4.8 MOLECULAR WEIGHT

The flue gas composition and molecular weight were assumed to be those of ambient air.

4.9 SAMPLING TRAINS

Hexavalent Chromium and Total Chromium - A Method 13-type impinger train was used to capture chromium emissions at locations A and B. All tests were conducted isokinetically by traversing the cross-sectional area of the duct or stack and regulating the sample flow rate relative to the flue gas flow rate as measured by the pitot tube attached to the sample probe. The sampling train consisted of a heated, glass-lined probe, a filter bypass, four impingers (the first three containing 100 mL of 0.1N NaOH each and the fourth containing silica gel). A Teflon filter was also employed between the third and fourth impingers. A 0.1N NaOH rinsing of the nozzle, probe, and first three impingers (the contents of each impinger and its rinse was kept separate for efficiency testing) was made at the end of each test. The Teflon filter was kept dry and separate.

Particle Size Distribution - Particle size samples were collected using Andersen Mark III cascade impactors. These in-stack, multi-stage cascade impactors have a total of eight stages followed by a back-up filter stage and particle size cut-offs ranging from 0.5 to 15 microns. Substrates were 64 mm diameter glass fiber filters. A constant sampling rate was maintained

through the test period. Sampling rates were set for isokinetic sampling as long as the sampling rate did not exceed the recommended flow rate for the impactor. See Appendix C for detailed sampling procedures. At the locations sampled, a point of average velocity was sampled. With the exception of the selection of the sampling point locations, the procedures used followed those recommended in the "Procedures Manual for Inhalable Particulate Sampler Operation" developed for EPA by the Southern Research Institute.

4.10 HEXAVALENT CHROMIUM CONTENT

Hexavalent chromium content was determined utilizing procedures described in the tentative EPA Method "Determination of Hexavalent Chromium Emissions from Stationary Sources" (see Appendix C). At the end of each Method 13-type impinger train run, the impinger reagent and rinsings were combined into one sample. The impinger reagents and rinsings as well as the Teflon filter were analyzed for hexavalent chromium content using this method. It was also used to determine the hexavalent content of the process samples which were collected.

Two different sample preparation techniques were used. For the standards setting testing presented in Subsections 3.0 through 3.5, the samples were first filtered. The filtered residue was sent for total chromium analysis and the filtrate was sent for hexavalent chromium analysis. For the methods development testing described in Subsection 3.6 and the process samples, two separate aliquots of the sample were analyzed, one for total chromium and one for hexavalent chromium.

4.11 TOTAL CHROMIUM CONTENT

Total chromium content was determined using procedures described in the "EMB Protocol for Sample Preparation and Emission Calculation of Field Samples for Total Chromium" which includes Neutron Activation Analysis (NAA) and using Inductively-Coupled Argon Plasmography (ICAP) (see Appendix C). As described above and in Appendix C, the standards setting impinger samples were prepared one way and analyzed using NAA and the methods development and process samples were prepared another way and analyzed using ICAP.

5.0 QUALITY ASSURANCE

Because the end product of testing is to produce representative emission results, quality assurance is one of the main facets of stack sampling. Quality assurance guidelines provide the detailed procedures and actions necessary for defining and producing acceptable data. Two such documents were used in this test program to ensure the collection of acceptable data and to provide a definition of unacceptable data. These documents are: the EPA Quality Assurance Handbook Volume III, EPA-600/4-77-027 and Entropy's "Quality Assurance Program Plan" which has been approved by the U.S. EPA, EMB.

Relative to this test program, the following steps were used to ensure that the testing and analytical procedures produced quality data.

- Calibration of field sampling equipment. (Appendix D describes calibration guidelines in more detail.)
- Checks of train configuration and on calculations.
- On-site quality assurance checks such as sampling train, pitot tube, and quality assurance checks of all test equipment prior to use.
- Use of designated analytical equipment and sampling reagents.

Table 5.1 summarizes the on-site audit data sheets for the sampling equipment used for the testing at each sampling location, including deviation limits. In addition to the pre- and post-test calibration audits, a field audit was performed on the meter boxes used for sampling. Entropy used the procedures described in the December 14, 1983 Federal Register (48FR55670). In addition, the analytical balance used for filter weighing was audited with Class "S" weights. Appendix D includes the audit run data sheets for each dry gas meter used for the testing and audit data sheets for the other sampling equipment.

Audit solutions prepared by the EPA were used to check the analytical procedures of the laboratories conducting the hexavalent chromium and total chromium analyses. Table 5.2 presents the results of these analytical audits. The audit tests show the analytical techniques were accurate.

The sampling equipment, reagents, and analytical procedures for this test series were in compliance with all necessary guidelines set forth for accurate test results as described in Volume III of the Quality Assurance Handbook.

TABLE 5.1. FIELD EQUIPMENT CALIBRATION

Equipment	Reference	Allowable Error	Actual Error	Within Allowable Limits
Meter box (N-5)	Field Audit (3/25)	Y ± 0.05Y	+0.027	✓
Meter box (N-9)	Field Audit (3/25)	Y ± 0.05Y	-0.005	✓
Meter box (N-7)	Field Audit (3/25)	Y ± 0.05Y	+0.002	✓
Meter box (N-7)	Field Audit (3/26)	Y ± 0.05Y	+0.008	✓
Meter box (N-14)	Field Audit (3/26)	Y ± 0.05Y	+0.003	✓
Meter box (R-2)	Field Audit (3/26)	Y ± 0.05Y	+0.019	✓
Meter box (N-8)	Field Audit (3/26)	Y ± 0.05Y	+0.042	✓

TABLE 5.2. AUDIT REPORT CHROMIUM ANALYSIS

Plant: Greensboro Industrial Platers Task No.: 3503

Date Samples Received: 4/86 Date Analyzed: 4/86

Samples Analyzed By: RTI and NCSU

Reviewed By: Peter Grohse / Jack Weaver Date of Review: 4/86

Sample Number	ug/mL Cr^{+6} or Cr	Source of Sample	Analytical Technique	Audit Value	Relative Error, %
G-129	100 µg Cr^{+6} + 100 µg Cr^{+3}	QAD	NAA	206.91	+ 3.5
G-129	"	QAD	Cr^{+6}	96.4	-3.6
G-129	"	QAD	ICP	194	-3.0

APPENDIX A

TEST RESULTS AND EXAMPLE CALCULATIONS

PLANT	GREENSBORO IND. PLATERS	DATE: 03/18/86	OPERATOR: B. RUDD
SAMPLING LOCATION	COATING TANK #5-EXHAUST	RUN NUMBER	TE-1A
FILTER NUMBER(S)		NOZZLE #, NOZZLE DIAM.	508,.313
BAR. PRESS., in. Hg	29.2	METER BOX ΔH@	1.82
STATIC PRESS., in. H20	-0.75	SAMPLE BOX NUMBER	11
LEAK RATE, CFM	0.002	METER BOX NUMBER	N-5
LEAK TEST VACUUM, in Hg	8	ASSUMED MOISTURE	2

Trav. Point. No.	Sample Time (Min.)	Gas Meter Reading (Cu.Ft.)	Velocity Head (in.H20)	Orifice ΔH (in. H20) Desired	Orifice ΔH (in. H20) Actual	Gas Meter Temp. (deg. F)	Pump Vac. (in.Hg)	Filter Box Temp. (deg.F)	Imp. Exit Temp. (deg.F)	Stack Temp. (deg.F)	Leak Check
A-4	0/0	81.662	0.175	1.89	1.89	81	6	118	64	66	
A-4	10	89.11	0.131	1.42	1.42	87	5	124	62	67	
A-4	20	95.86	0.132	1.43	1.43	88	5	124	64	67	
B-5	30	102.40	0.204	2.21	2.21	88	6	127	66	68	
B-5	40	110.46	0.206	2.23	2.23	89	6	130	66	68	
B-5	50	118.57	0.213	2.31	2.31	90	6	128	66	67	
	60/OFF	126.78									
FINAL DIFF/AVG.		45.121	0.175		1.92	87.17				67.17	

PLANT	GREENSBORO IND. PLATERS	DATE: 03/18/86	OPERATOR: B. RUDD
SAMPLING LOCATION	COATING TANK #5-EXHAUST	RUN NUMBER	TE-1B
FILTER NUMBER(S)		NOZZLE #, NOZZLE DIAM.	509,.312
BAR. PRESS., in. Hg	29.2	METER BOX ΔH@	1.63
STATIC PRESS., in. H20	-0.75	SAMPLE BOX NUMBER	13
LEAK RATE, CFM	0.016	METER BOX NUMBER	N-10
LEAK TEST VACUUM, in Hg	8	ASSUMED MOISTURE	2

Trav. Point. No.	Sample Time (Min.)	Gas Meter Reading (Cu.Ft.)	Velocity Head (in.H20)	Orifice ΔH (in. H20) Desired	Orifice ΔH (in. H20) Actual	Gas Meter Temp. (deg. F)	Pump Vac. (in.Hg)	Filter Box Temp. (deg.F)	Imp. Exit Temp. (deg.F)	Stack Temp. (deg.F)	Leak Check
B-5	0/0	327.000	0.175	1.69	1.69	73	5	121	66	67	
B-5	10	334.54	0.217	2.10	2.10	74	6	120	67	68	
B-5	20	342.68	0.224	2.17	2.17	76	6	122	66	67	
A-4	30	351.132	0.155	1.50	1.50	76	5	122	65	68	
A-4	40	358.41	0.156	1.51	1.51	78	5	126	65	68	
A-4	50	365.67	0.157	1.52	1.52	81	5	128	66	67	
	60/OFF	372.88									
FINAL											
DIFF/AVG.											
		45.883	0.180		1.75	76.33				67.50	

PARTICULATE FIELD DATA & RESULTS TABULATION

PLANT: Greensboro Industrial Platers, Greensboro, North Carolina

RUN #	DATE	SAMPLING LOCATION	TEST TEAM LEADER
TE-1A	03/18/86	Coating Tank #5 - Outlet	Barry F. Rudd
TE-1B	03/18/86	Coating Tank #5 - Outlet	Barry F. Rudd

		TE-1A	TE-1B
	RUN START TIME	915	915
	RUN FINISH TIME	1021	1022
	NET SAMPLING POINTS	2	2
Theta	NET RUN TIME, MINUTES	60.00	60.00
Dia	NOZZLE DIAMETER, INCHES	0.313	0.312
Cp	PITOT TUBE COEFFICIENT	0.840	0.840
Y	DRY GAS METER CALIBRATION FACTOR	0.994	1.002
Pbar	BAROMETRIC PRESSURE, INCHES HG	29.20	29.20
Delta H	AVG. PRESSURE DIFFERENTIAL OF ORIFICE METER, INCHES H2O	1.920	1.750
Vm	VOLUME OF METERED GAS SAMPLE, DRY ACF	45.121	45.883
tm	DRY GAS METER TEMPERATURE, DEGREES F	87	76
Vm(std)	VOLUME OF METERED GAS SAMPLE, DRY SCF*	42.438	44.376
Vlc	TOTAL VOLUME OF LIQUID COLLECTED IN IMPINGERS & SILICA GEL, ML	14.0	17.0
Vw(std)	VOLUME OF WATER VAPOR, SCF*	0.659	0.800
%H2O	MOISTURE CONTENT, PERCENT BY VOLUME	1.5	1.8
Mfd	DRY MOLE FRACTION	0.985	0.982
Md	ESTIMATED DRY MOLECULAR WT, LB/LB-MOLE	28.84	28.84
Ms	WET MOLECULAR WEIGHT, LB/LB-MOLE	28.67	28.64
Pg	FLUE GAS STATIC PRESSURE, INCHES H2O	-0.75	-0.75
Ps	ABSOLUTE FLUE GAS PRESS., INCHES HG	29.14	29.14
ts	FLUE GAS TEMPERATURE, DEGREES F	67	68
Delta p	AVERAGE VELOCITY HEAD, INCHES H2O	0.1750	0.1800
vs	FLUE GAS VELOCITY, FEET/SECOND	23.86	24.23
A	STACK/DUCT AREA, SQUARE INCHES	103.9	103.9
Qsd	VOLUMETRIC AIR FLOW RATE, DRY SCFM*	992.2	1,003
Qaw	VOLUMETRIC AIR FLOW RATE, WET ACFM	1,033	1,049
%I	ISOKINETIC SAMPLING RATE, PERCENT	96.1	100.0

* 68 Degrees F -- 29.92 Inches of Mercury (Hg)

(continued next page)

		TE-1A	TE-1B	
	HEXAVALENT CHROMIUM:			
mg	CATCH, MILLIGRAMS	(2,766.0)	(2,644.0)	
gr/DSCF	CONCENTRATION, GRAINS PER DSCF*	(1.006)	(0.9195)	
Lb/Hr	EMISSION RATE, LBS/HOUR	(8.554)	(7.907)	
	TOTAL CHROMIUM:			
mg	TOTAL CATCH, MILLIGRAMS	(2,684.0)	(2,592.0)	
gr/DSCF	CONCENTRATION, GRAINS PER DSCF*	(0.9760)	(0.9014)	
Lb/Hr	EMISSION RATE, LBS/HOUR	(8.300)	(7.752)	
	FLUE GAS TEMPERATURE:			
	Degrees Fahrenheit	67	68	deg. F
	Degrees Centigrade	19	20	deg. C
	AIR FLOW RATES x million:			
	Actual Cubic Meters/hr	0.0018	0.0018	acmh
	Actual Cubic Feet/hr	0.0620	0.0629	acfh
	Dry Std. Cubic Meters/hr*	0.0017	0.0017	dscmh
	Dry Std. Cubic Feet/hr*	0.0595	0.0602	dscfh
	HEXAVALENT CHROMIUM:			
	Concentration, mg/dscm*	(2301.7691)	(2104.1618)	mg/dscm
	Concentration, gr/dscf*	(1.005842)	(0.919491)	gr/dscf
	Emissions, kg/hr	(3.8800)	(3.5866)	kg/hr
	Emissions, lb/hr	(8.5540)	(7.9072)	lb/hr
	TOTAL CHROMIUM:			
	Concentration, mg/dscm*	(2233.5315)	(2062.7789)	mg/dscm
	Concentration, gr/dscf*	(0.976024)	(0.901407)	gr/dscf
	Emissions, kg/hr	(3.7650)	(3.5161)	kg/hr
	Emissions, lb/hr	(8.3004)	(7.7516)	lb/hr

* 68 Degrees F -- 29.92 Inches of Mercury (Hg)

( ) = x 10^{-3}

EXAMPLE PARTICULATE TEST CALCULATIONS NO. TE-1A

Coating Tank #5 - Outlet

VOLUME OF DRY GAS SAMPLED AT STANDARD CONDITIONS

$$Vm(std) = 17.64 * Y * Vm * \frac{(Pbar + Delta\ H/13.6)}{(460 + tm)}$$

$$Vm(std) = 17.64 * 0.994 * 45.121 * \frac{(29.20 + 1.920/13.6)}{(460 + 87)} = 42.438 \text{ DSCF}$$

VOLUME OF WATER VAPOR AT STANDARD CONDITIONS

$$Vw(std) = 0.04707 * Vlc$$

$$Vw(std) = 0.04707 * 14.0 = 0.659 \text{ SCF}$$

PERCENT MOISTURE, BY VOLUME, AS MEASURED IN FLUE GAS

$$\%H2O = 100 * Vw(std) / (Vw(std) + Vm(std))$$

$$\%H2O = \frac{0.659}{0.659 + 42.438} * 100 = 1.5\ \%$$

DRY MOLE FRACTION OF FLUE GAS

$$Mfd = 1 - \%H2O/100$$

$$Mfd = 1 - 1.5/100 = 0.985$$

WET MOLECULAR WEIGHT OF FLUE GAS

$$Ms = (Md * Mfd) + (0.18 * \%H2O)$$

$$Ms = 28.84 * 0.985 + (0.18 * 1.5) = 28.67 \text{ LB/LB-MOLE}$$

ABSOLUTE FLUE GAS PRESSURE

$$Ps = Pbar + Pg / 13.6$$

$$Ps = 29.20 + (-0.7 / 13.6) = 29.14 \text{ IN. HG.}$$

AVERAGE FLUE GAS VELOCITY [Note: (Delta p)avg is square of avg sq. root]

$$vs = 85.49 * Cp * SQRT\left[\frac{(Delta\ p)avg * (460 + ts)}{Ps * Ms}\right]$$

$$vs = 85.49 * 0.840 * SQRT\left[\frac{0.1750 * (460 + 67)}{29.14 * 28.67}\right] = 23.9 \text{ FT/SEC}$$

DRY VOLUMETRIC FLUE GAS FLOW RATE @ STANDARD CONDITIONS

$$Qsd = \frac{60}{144} * Mfd * vs * A * \frac{Tstd}{ts + 460} * \frac{Ps}{Pstd}$$

$$Qsd = \frac{60}{144} * 0.985 * 23.9 * 103.9 * \frac{528}{67 + 460} * \frac{29.14}{29.92}$$

$$Qsd = 992 \text{ SCFM}$$

WET VOLUMETRIC STACK GAS FLOW RATE @ FLUE GAS CONDITIONS

$$Qaw = 60 / 144 * vs * A$$

$$Qaw = 60 / 144 * 23.9 * 103.9 = 1,033 \text{ ACFM}$$

PERCENT ISOKINETIC OF SAMPLING RATE

$$\%I = \frac{Pstd}{Tstd} * \frac{100}{60} * \frac{(ts + 460) * Vm(std)}{Ps * vs * Mfd * Theta * Area\text{-}nozzle,\ sq.ft.}$$

$$\%I = \frac{29.92}{528} * \frac{100}{60} * \frac{(67 + 460) * 42.438}{29.14 * 23.9 * 0.985 * 60.00 * 0.0005343}$$

$$\%I = 96.1 \ \%$$

GRAINS PER DRY STANDARD CUBIC FOOT

$$gr/DSCF = \frac{7000}{453,592} * \frac{mgs}{Vm(std)}$$

$$gr/DSCF = \frac{7000}{453,592} * \frac{2,766.0}{42.438} = 1.0058 \quad gr/DSCF$$

POUNDS PER HOUR

Lb/Hr = 60 / 7000 * gr/DSCF * Qsd

Lb/Hr = 60/7000 * 1.0058 * 992 = 8.55 LB/HR

PLANT	GREENSBORO IND. PLATERS	DATE: 03/18/86	OPERATOR: B. RUDD
SAMPLING LOCATION	COATING TANK #5-EXHAUST	RUN NUMBER	TE-2A
FILTER NUMBER(S)		NOZZLE #, NOZZLE DIAM.	507,.304
BAR. PRESS., in. Hg	29.2	METER BOX ΔH@	1.82
STATIC PRESS., in. H20	-0.75	SAMPLE BOX NUMBER	24
LEAK RATE, CFM	0.006	METER BOX NUMBER	N-5
LEAK TEST VACUUM, in Hg	10	ASSUMED MOISTURE	2

Trav. Point. No.	Sample Time (Min.)	Gas Meter Reading (Cu.Ft.)	Velocity Head (in.H20)	Orifice ΔH (in. H20) Desired	Actual	Gas Meter Temp. (deg. F)	Pump Vac. (in.Hg)	Filter Box Temp. (deg.F)	Imp. Exit Temp. (deg.F)	Stack Temp. (deg.F)	Leak Check
A-4	0/0	126.933	0.156	1.50	1.50	70	6	121	67	71	
A-4	10	133.67	0.158	1.52	1.52	73	6	127	66	71	
A-4	20	140.28	0.158	1.52	1.52	77	6	125	66	71	
B-5	30	147.019	0.208	2.00	2.00	82	8	125	65	70	
B-5	40	154.72	0.210	2.02	2.02	87	8	125	62	70	
B-5	50	162.52	0.210	2.02	2.02	90	8	125	64	70	
	60/OFF	170.451									
FINAL											
DIFF/AVG.											
		43.518	0.182		1.76	79.83				70.50	

PLANT	GREENSBORO IND. PLATERS	DATE: 03/18/86	OPERATOR: B. RUDD
SAMPLING LOCATION	COATING TANK #5-EXHAUST	RUN NUMBER	TE-2B
FILTER NUMBER(S)		NOZZLE #, NOZZLE DIAM.	108,.301
BAR. PRESS., in. Hg	29.2	METER BOX ΔH@	1.63
STATIC PRESS., in. H20	-0.75	SAMPLE BOX NUMBER	5
LEAK RATE, CFM	0.000	METER BOX NUMBER	N-10
LEAK TEST VACUUM, in Hg	10	ASSUMED MOISTURE	2

Trav. Point. No.	Sample Time (Min.)	Gas Meter Reading (Cu.Ft.)	Velocity Head (in.H20)	Orifice (in. H20) Desired	ΔH Actual	Gas Meter Temp. (deg. F)	Pump Vac. (in.Hg)	Filter Box Temp. (deg.F)	Imp. Exit Temp. (deg.F)	Stack Temp. (deg.F)	Leak Check
B-5	0/0	373.102	0.196	1.89	1.89	65	8	128	63	71	
B-5	10	380.98	0.193	1.61	1.61	69	8	129	66	71	
B-5	20	388.18	0.192	1.61	1.61	73	8	130	66	71	
A-4	30	395.648	0.167	1.40	1.40	78	7	127	65	70	
A-4	40	402.61	0.162	1.35	1.35	82	7	127	62	70	
A-4	50	409.42	0.162	1.35	1.35	85	7	125	63	70	
	60/OFF	416.327									
FINAL DIFF/AVG.		43.225	0.178		1.54	75.33				70.50	

PARTICULATE FIELD DATA & RESULTS TABULATION

PLANT: Greensboro Industrial Platers, Greensboro, North Carolina

RUN #	DATE	SAMPLING LOCATION	TEST TEAM LEADER
TE-2A	03/18/86	Coating Tank #5 - Outlet	Barry F. Rudd
TE-2B	03/18/86	Coating Tank #5 - Outlet	Barry F. Rudd

		TE-2A	TE-2B
	RUN START TIME	1253	1254
	RUN FINISH TIME	1400	1402
	NET SAMPLING POINTS	2	2
Theta	NET RUN TIME, MINUTES	60.00	60.00
Dia	NOZZLE DIAMETER, INCHES	0.304	0.301
Cp	PITOT TUBE COEFFICIENT	0.840	0.840
Y	DRY GAS METER CALIBRATION FACTOR	0.994	1.002
Pbar	BAROMETRIC PRESSURE, INCHES HG	29.20	29.20
Delta H	AVG. PRESSURE DIFFERENTIAL OF ORIFICE METER, INCHES H2O	1.760	1.540
Vm	VOLUME OF METERED GAS SAMPLE, DRY ACF	43.518	43.225
tm	DRY GAS METER TEMPERATURE, DEGREES F	80	75
Vm(std)	VOLUME OF METERED GAS SAMPLE, DRY SCF*	41.444	41.861
Vlc	TOTAL VOLUME OF LIQUID COLLECTED IN IMPINGERS & SILICA GEL, ML	15.0	19.0
Vw(std)	VOLUME OF WATER VAPOR, SCF*	0.706	0.894
%H2O	MOISTURE CONTENT, PERCENT BY VOLUME	1.7	2.1
Mfd	DRY MOLE FRACTION	0.983	0.979
Md	ESTIMATED DRY MOLECULAR WT, LB/LB-MOLE	28.84	28.84
Ms	WET MOLECULAR WEIGHT, LB/LB-MOLE	28.65	28.61
Pg	FLUE GAS STATIC PRESSURE, INCHES H2O	-0.75	-0.75
Ps	ABSOLUTE FLUE GAS PRESS., INCHES HG	29.14	29.14
ts	FLUE GAS TEMPERATURE, DEGREES F	71	71
Delta p	AVERAGE VELOCITY HEAD, INCHES H2O	0.1820	0.1780
vs	FLUE GAS VELOCITY, FEET/SECOND	24.43	24.18
A	STACK/DUCT AREA, SQUARE INCHES	103.9	103.9
Qsd	VOLUMETRIC AIR FLOW RATE, DRY SCFM*	1,007	992.2
Qaw	VOLUMETRIC AIR FLOW RATE, WET ACFM	1,058	1,047
%I	ISOKINETIC SAMPLING RATE, PERCENT	98.1	102.5

* 68 Degrees F -- 29.92 Inches of Mercury (Hg)

(continued next page)

		TE-2A	TE-2B	
	HEXAVALENT CHROMIUM:			
mg	CATCH, MILLIGRAMS	(2,490.0)	(2,093.0)	
gr/DSCF	CONCENTRATION, GRAINS PER DSCF*	(0.9272)	(0.7716)	
Lb/Hr	EMISSION RATE, LBS/HOUR	(8.001)	(6.562)	
	TOTAL CHROMIUM:			
mg	TOTAL CATCH, MILLIGRAMS	(2,422.0)	(2,069.0)	
gr/DSCF	CONCENTRATION, GRAINS PER DSCF*	(0.9019)	(0.7627)	
Lb/Hr	EMISSION RATE, LBS/HOUR	(7.783)	(6.487)	
	FLUE GAS TEMPERATURE:			
	Degrees Fahrenheit	71	71	deg. F
	Degrees Centigrade	22	22	deg. C
	AIR FLOW RATES x million:			
	Actual Cubic Meters/hr	0.0018	0.0018	acmh
	Actual Cubic Feet/hr	0.0635	0.0628	acfh
	Dry Std. Cubic Meters/hr*	0.0017	0.0017	dscmh
	Dry Std. Cubic Feet/hr*	0.0604	0.0595	dscfh
	HEXAVALENT CHROMIUM:			
	Concentration, mg/dscm*	(2121.7750)	(1765.7183)	mg/dscm
	Concentration, gr/dscf*	(0.927187)	(0.771595)	gr/dscf
	Emissions, kg/hr	(3.6293)	(2.9766)	kg/hr
	Emissions, lb/hr	(8.0012)	(6.5622)	lb/hr
	TOTAL CHROMIUM:			
	Concentration, mg/dscm*	(2063.8309)	(1745.4711)	mg/dscm
	Concentration, gr/dscf*	(0.901867)	(0.762748)	gr/dscf
	Emissions, kg/hr	(3.5302)	(2.9424)	kg/hr
	Emissions, lb/hr	(7.7827)	(6.4870)	lb/hr

* 68 Degrees F -- 29.92 Inches of Mercury (Hg)

( ) = x 10^{-3}

PLANT	GREENSBORO IND. PLATERS	DATE: 03/18/86	OPERATOR: DR
SAMPLING LOCATION	COATING TANK #5-EXHAUST	RUN NUMBER	TE-3A
FILTER NUMBER(S)		NOZZLE #, NOZZLE DIAM.	508,.313
BAR. PRESS., in. Hg	29.2	METER BOX ΔH@	1.82
STATIC PRESS., in. H20	-0.73	SAMPLE BOX NUMBER	11
LEAK RATE, CFM	0.005	METER BOX NUMBER	N-5
LEAK TEST VACUUM, in Hg	7	ASSUMED MOISTURE	2

Trav. Point. No.	Sample Time (Min.)	Gas Meter Reading (Cu.Ft.)	Velocity Head (in.H20)	Orifice ΔH (in. H20) Desired	Actual	Gas Meter Temp. (deg. F)	Pump Vac. (in.Hg)	Filter Box Temp. (deg.F)	Imp. Exit Temp. (deg.F)	Stack Temp. (deg.F)	Leak Check
A-4	0/0	170.642	0.170	1.82	1.82	92	6	120	66	72	
A-4	10	178.01	0.167	1.78	1.78	97	6	117	63	72	
A-4	20	185.29	0.167	1.83	1.83	98	6	118	63	71	
B-5	30	192.837	0.218	2.39	2.39	96	7	120	65	72	
B-5	40	201.28	0.222	2.43	2.43	100	7	120	61	72	
B-5	50	209.87	0.217	2.38	2.38	102	7	117	62	71	
	60/OFF	218.448									
FINAL											
DIFF/AVG.											
		47.806	0.193		2.11	97.50				71.67	

PLANT	GREENSBORO IND. PLATERS	DATE: 03/18/86	OPERATOR: DR
SAMPLING LOCATION	COATING TANK #5-EXHAUST	RUN NUMBER	TE-3B
FILTER NUMBER(S)		NOZZLE #, NOZZLE DIAM.	509,.312
BAR. PRESS., in. Hg	29.2	METER BOX ΔH@	1.63
STATIC PRESS., in. H20	-0.59	SAMPLE BOX NUMBER	11
LEAK RATE, CFM	0.090	METER BOX NUMBER	N-10
LEAK TEST VACUUM, in Hg	7	ASSUMED MOISTURE	2

Trav. Point. No.	Sample Time (Min.)	Gas Meter Reading (Cu.Ft.)	Velocity Head (in.H20)	Orifice ΔH (in. H20) Desired	Orifice ΔH (in. H20) Actual	Gas Meter Temp. (deg. F)	Pump Vac. (in.Hg)	Filter Box Temp. (deg.F)	Imp. Exit Temp. (deg.F)	Stack Temp. (deg.F)	Leak Check
B-5	0/0	416.608	0.232	2.35	2.35	88	7	125	66	72	
B-5	10	425.60	0.227	2.29	2.29	91	7	125	62	72	
B-5	20	424.42	0.232	2.35	2.35	93	7	122	62	71	
A-4	30	443.520	0.154	1.55	1.55	90	5	120	65	72	
A-4	40	450.88	0.154	1.55	1.55	91	5	120	62	72	
A-4	50	458.24	0.153	1.55	1.55	91	5	120	64	71	
	60/OFF	465.660									
FINAL DIFF/AVG.		49.052	0.190		1.94	90.67				71.67	

PARTICULATE FIELD DATA & RESULTS TABULATION

PLANT: Greensboro Industrial Platers, Greensboro, North Carolina

RUN #	DATE	SAMPLING LOCATION	TEST TEAM LEADER
TE-3A	03/18/86	Coating Tank #5 - Outlet	B. Dwain Ritchie
TE-3B	03/18/86	Coating Tank #5 - Outlet	B. Dwain Ritchie

		TE-3A	TE-3B
	RUN START TIME	1429	1430
	RUN FINISH TIME	1533	1534
	NET SAMPLING POINTS	2	2
Theta	NET RUN TIME, MINUTES	60.00	60.00
Dia	NOZZLE DIAMETER, INCHES	0.313	0.312
Cp	PITOT TUBE COEFFICIENT	0.840	0.840
Y	DRY GAS METER CALIBRATION FACTOR	0.994	1.002
Pbar	BAROMETRIC PRESSURE, INCHES HG	29.20	29.20
Delta H	AVG. PRESSURE DIFFERENTIAL OF ORIFICE METER, INCHES H2O	2.110	1.940
Vm	VOLUME OF METERED GAS SAMPLE, DRY ACF	47.806	49.052
tm	DRY GAS METER TEMPERATURE, DEGREES F	98	91
Vm(std)	VOLUME OF METERED GAS SAMPLE, DRY SCF*	44.098	46.171
Vlc	TOTAL VOLUME OF LIQUID COLLECTED IN IMPINGERS & SILICA GEL, ML	20.0	20.0
Vw(std)	VOLUME OF WATER VAPOR, SCF*	0.941	0.941
%H2O	MOISTURE CONTENT, PERCENT BY VOLUME	2.1	2.0
Mfd	DRY MOLE FRACTION	0.979	0.980
Md	ESTIMATED DRY MOLECULAR WT, LB/LB-MOLE	28.84	28.84
Ms	WET MOLECULAR WEIGHT, LB/LB-MOLE	28.61	28.62
Pg	FLUE GAS STATIC PRESSURE, INCHES H2O	-0.73	-0.59
Ps	ABSOLUTE FLUE GAS PRESS., INCHES HG	29.15	29.16
ts	FLUE GAS TEMPERATURE, DEGREES F	72	72
Delta p	AVERAGE VELOCITY HEAD, INCHES H2O	0.1930	0.1900
vs	FLUE GAS VELOCITY, FEET/SECOND	25.20	24.99
A	STACK/DUCT AREA, SQUARE INCHES	103.9	103.9
Qsd	VOLUMETRIC AIR FLOW RATE, DRY SCFM*	1,032	1,025
Qaw	VOLUMETRIC AIR FLOW RATE, WET ACFM	1,091	1,082
%I	ISOKINETIC SAMPLING RATE, PERCENT	96.0	101.9

* 68 Degrees F -- 29.92 Inches of Mercury (Hg)

(continued next page)

		TE-3A	TE-3B	
	HEXAVALENT CHROMIUM:			
mg	CATCH, MILLIGRAMS	(2,768.0)	(2,218.0)	
gr/DSCF	CONCENTRATION, GRAINS PER DSCF*	(0.9687)	(0.7413)	
Lb/Hr	EMISSION RATE, LBS/HOUR	(8.571)	(6.514)	
	TOTAL CHROMIUM:			
mg	TOTAL CATCH, MILLIGRAMS	(2,714.0)	(2,191.0)	
gr/DSCF	CONCENTRATION, GRAINS PER DSCF*	(0.9498)	(0.7323)	
Lb/Hr	EMISSION RATE, LBS/HOUR	(8.404)	(6.435)	
	FLUE GAS TEMPERATURE:			
	Degrees Fahrenheit	72	72	deg. F
	Degrees Centigrade	22	22	deg. C
	AIR FLOW RATES x million:			
	Actual Cubic Meters/hr	0.0019	0.0018	acmh
	Actual Cubic Feet/hr	0.0655	0.0649	acfh
	Dry Std. Cubic Meters/hr*	0.0018	0.0017	dscmh
	Dry Std. Cubic Feet/hr*	0.0619	0.0615	dscfh
	HEXAVALENT CHROMIUM:			
	Concentration, mg/dscm*	(2216.7265)	(1696.5017)	mg/dscm
	Concentration, gr/dscf*	(0.968680)	(0.741349)	gr/dscf
	Emissions, kg/hr	(3.8876)	(2.9548)	kg/hr
	Emissions, lb/hr	(8.5707)	(6.5143)	lb/hr
	TOTAL CHROMIUM:			
	Concentration, mg/dscm*	(2173.4811)	(1675.8499)	mg/dscm
	Concentration, gr/dscf*	(0.949782)	(0.732324)	gr/dscf
	Emissions, kg/hr	(3.8118)	(2.9189)	kg/hr
	Emissions, lb/hr	(8.4035)	(6.4350)	lb/hr

* 68 Degrees F -- 29.92 Inches of Mercury (Hg)

( ) = x 10^{-3}

PLANT	GREENSBORO IND. PLATERS	DATE: 03/19/86	OPERATOR: DR
SAMPLING LOCATION	COATING TANK #5 EXHAUST	RUN NUMBER	TE-4A
FILTER NUMBER(S)	N/A	NOZZLE #, NOZZLE DIAM.	507,.304
BAR. PRESS., in. Hg	29.2	METER BOX ΔH@	1.82
STATIC PRESS., in. H20	-0.73	SAMPLE BOX NUMBER	24
LEAK RATE, CFM	0.003	METER BOX NUMBER	N-5
LEAK TEST VACUUM, in Hg	7	ASSUMED MOISTURE	2

Trav. Point. No.	Sample Time (Min.)	Gas Meter Reading (Cu.Ft.)	Velocity Head (in.H20)	Orifice (in. H20) Desired	ΔH Actual	Gas Meter Temp. (deg. F)	Pump Vac. (in.Hg)	Filter Box Temp. (deg.F)	Imp. Exit Temp. (deg.F)	Stack Temp. (deg.F)	Leak Check
A-4	0/0	218.623	0.162	1.54	1.54	78	6	120	65	72	
A-4	10	225.34	0.163	1.55	1.55	79	6	120	62	72	
A-4	20	232.16	0.163	1.55	1.55	81	6	122	63	72	
B-5	30/0	239.01	0.197	1.88	1.88	82	7	125	65	72	
B-5	10	246.49	0.197	1.88	1.88	85	7	125	62	71	
B-5	20	254.04	0.197	1.88	1.88	87	7	125	62	72	
A-4	60/OFF	261.610									
FINAL											
DIFF/AVG.		42.987	0.179		1.71	82.00				71.83	

PLANT	GREENSBORO IND. PLATERS	DATE: 03/19/86	OPERATOR: DR
SAMPLING LOCATION	COATING TANK #5 EXHAUST	RUN NUMBER	TE-4B
FILTER NUMBER(S)	N/A	NOZZLE #, NOZZLE DIAM.	108,.301
BAR. PRESS., in. Hg	29.2	METER BOX ΔH@	1.63
STATIC PRESS., in. H20	-0.73	SAMPLE BOX NUMBER	5
LEAK RATE, CFM	0.020	METER BOX NUMBER	N-10
LEAK TEST VACUUM, in Hg	11	ASSUMED MOISTURE	2

Trav. Point. No.	Sample Time (Min.)	Gas Meter Reading (Cu.Ft.)	Velocity Head (in.H20)	Orifice (in. H20) ΔH Desired	Actual	Gas Meter Temp. (deg. F)	Pump Vac. (in.Hg)	Filter Box Temp. (deg.F)	Imp. Exit Temp. (deg.F)	Stack Temp. (deg.F)	Leak Check
B-5	0/0	465.887	0.187	1.75	1.75	75	11	120	65	72	
B-5	10	473.75	0.193	1.81	1.81	78	11	120	60	72	
B-5	20	481.71	0.190	1.78	1.78	82	10	125	62	72	
A-4	30/0	489.573	0.162	1.52	1.52	82	9	125	66	72	
A-4	10	496.94	0.157	1.47	1.47	84	9	125	64	71	
A-4	20	504.22	0.152	1.47	1.47	85	9	125	65	72	
	60/OFF	511.424									
FINAL DIFF/AVG.		45.537	0.173		1.63	81.00				71.83	

PARTICULATE FIELD DATA & RESULTS TABULATION

PLANT: Greensboro Industrial Platers, Greensboro, North Carolina

RUN #	DATE	SAMPLING LOCATION	TEST TEAM LEADER
TE-4A	03/19/86	Coating Tank #5 - Outlet	B. Dwain Ritchie
TE-4B	03/19/86	Coating Tank #5 - Outlet	B. Dwain Ritchie

		TE-4A	TE-4B
	RUN START TIME	924	926
	RUN FINISH TIME	1031	1032
	NET SAMPLING POINTS	2	2
Theta	NET RUN TIME, MINUTES	60.00	60.00
Dia	NOZZLE DIAMETER, INCHES	0.304	0.301
Cp	PITOT TUBE COEFFICIENT	0.840	0.840
Y	DRY GAS METER CALIBRATION FACTOR	0.994	1.002
Pbar	BAROMETRIC PRESSURE, INCHES HG	29.20	29.20
Delta H	AVG. PRESSURE DIFFERENTIAL OF ORIFICE METER, INCHES H2O	1.710	1.630
Vm	VOLUME OF METERED GAS SAMPLE, DRY ACF	42.987	45.537
tm	DRY GAS METER TEMPERATURE, DEGREES F	82	81
Vm(std)	VOLUME OF METERED GAS SAMPLE, DRY SCF*	40.782	43.621
Vlc	TOTAL VOLUME OF LIQUID COLLECTED IN IMPINGERS & SILICA GEL, ML	29.5	21.5
Vw(std)	VOLUME OF WATER VAPOR, SCF*	1.389	1.012
%H2O	MOISTURE CONTENT, PERCENT BY VOLUME		
	FROM MEASURED WATER CATCH	3.3	2.3**
	SATURATION AT FLUE GAS TEMPERATURE	2.7**	2.7
Mfd	DRY MOLE FRACTION	0.973	0.977
Md	ESTIMATED DRY MOLECULAR WT, LB/LB-MOLE	28.84	28.84
Ms	WET MOLECULAR WEIGHT, LB/LB-MOLE	28.54	28.59
Pg	FLUE GAS STATIC PRESSURE, INCHES H2O	-0.73	-0.73
Ps	ABSOLUTE FLUE GAS PRESS., INCHES HG	29.15	29.15
ts	FLUE GAS TEMPERATURE, DEGREES F	72	72
Delta p	AVERAGE VELOCITY HEAD, INCHES H2O	0.1790	0.1730
vs	FLUE GAS VELOCITY, FEET/SECOND	24.30	23.87
A	STACK/DUCT AREA, SQUARE INCHES	103.9	103.9
Qsd	VOLUMETRIC AIR FLOW RATE, DRY SCFM*	988.9	975.9
Qaw	VOLUMETRIC AIR FLOW RATE, WET ACFM	1,052	1,033
%I	ISOKINETIC SAMPLING RATE, PERCENT	98.3	108.6

* 68 Degrees F -- 29.92 Inches of Mercury (Hg)

** ACTUAL %H2O USED IN CALCULATIONS

(continued next page)

		TE-4A	TE-4B	
	HEXAVALENT CHROMIUM:			
mg	CATCH, MILLIGRAMS	(2,819.0)	(2,175.0)	
gr/DSCF	CONCENTRATION, GRAINS PER DSCF*	(1.067)	(0.7695)	
Lb/Hr	EMISSION RATE, LBS/HOUR	(9.042)	(6.436)	
	TOTAL CHROMIUM:			
mg	TOTAL CATCH, MILLIGRAMS	(2,760.0)	(2,190.0)	
gr/DSCF	CONCENTRATION, GRAINS PER DSCF*	(1.044)	(0.7748)	
Lb/Hr	EMISSION RATE, LBS/HOUR	(8.853)	(6.481)	
	FLUE GAS TEMPERATURE:			
	Degrees Fahrenheit	72	72	deg. F
	Degrees Centigrade	22	22	deg. C
	AIR FLOW RATES x million:			
	Actual Cubic Meters/hr	0.0018	0.0018	acmh
	Actual Cubic Feet/hr	0.0631	0.0620	acfh
	Dry Std. Cubic Meters/hr*	0.0017	0.0017	dscmh
	Dry Std. Cubic Feet/hr*	0.0593	0.0586	dscfh
	HEXAVALENT CHROMIUM:			
	Concentration, mg/dscm*	(2441.1070)	(1760.8707)	mg/dscm
	Concentration, gr/dscf*	(1.066731)	(0.769477)	gr/dscf
	Emissions, kg/hr	(4.1014)	(2.9195)	kg/hr
	Emissions, lb/hr	(9.0421)	(6.4363)	lb/hr
	TOTAL CHROMIUM:			
	Concentration, mg/dscm*	(2390.0160)	(1773.0147)	mg/dscm
	Concentration, gr/dscf*	(1.044405)	(0.774784)	gr/dscf
	Emissions, kg/hr	(4.0156)	(2.9396)	kg/hr
	Emissions, lb/hr	(8.8529)	(6.4807)	lb/hr

* 68 Degrees F -- 29.92 Inches of Mercury (Hg)

( ) = x 10^{-3}

PLANT	GREENSBORO IND. PLATERS	DATE: 03/19/86	OPERATOR: DR
SAMPLING LOCATION	COATING TANK #5 EXHAUST	RUN NUMBER	TE-5A
FILTER NUMBER(S)	N/A	NOZZLE #, NOZZLE DIAM.	508,.313
BAR. PRESS., in. Hg	29.2	METER BOX ΔH@	1.82
STATIC PRESS., in. H20	-0.73	SAMPLE BOX NUMBER	11
LEAK RATE, CFM	0.016	METER BOX NUMBER	N-5
LEAK TEST VACUUM, in Hg	7	ASSUMED MOISTURE	2

Trav. Point. No.	Sample Time (Min.)	Gas Meter Reading (Cu.Ft.)	Velocity Head (in.H20)	Orifice ΔH (in. H20) Desired	Actual	Gas Meter Temp. (deg. F)	Pump Vac. (in.Hg)	Filter Box Temp. (deg.F)	Imp. Exit Temp. (deg.F)	Stack Temp. (deg.F)	Leak Check
A-4	0/0	261.804	0.162	1.72	1.72	86	6	117	66	72	
A-4	10	268.96	0.171	1.82	1.82	89	6	120	62	72	
A-4	20	276.40	0.171	1.82	1.82	90	6	121	62	71	
B-5	30/0	283.91	0.208	2.21	2.21	88	7	119	67	71	
B-5	10	292.12	0.207	2.20	2.20	89	7	119	64	72	
B-5	20	300.32	0.207	2.20	2.20	90	7	120	64	72	
	60/OFF	308.541									
FINAL											
DIFF/AVG.		46.737	0.187		2.00	88.67				71.67	

PLANT	GREENSBORO IND. PLATERS	DATE: 03/19/86	OPERATOR: DR
SAMPLING LOCATION	COATING TANK #5 EXHAUST	RUN NUMBER	TE-5B
FILTER NUMBER(S)	N/A	NOZZLE #, NOZZLE DIAM.	509,.312
BAR. PRESS., in. Hg	29.2	METER BOX ΔH@	1.63
STATIC PRESS., in. H20	-0.73	SAMPLE BOX NUMBER	13
LEAK RATE, CFM	0.003	METER BOX NUMBER	N-10
LEAK TEST VACUUM, in Hg	7	ASSUMED MOISTURE	2

Trav. Point. No.	Sample Time (Min.)	Gas Meter Reading (Cu.Ft.)	Velocity Head (in.H20)	Orifice (in. H20) Desired	ΔH Actual	Gas Meter Temp. (deg. F)	Pump Vac. (in.Hg)	Filter Box Temp. (deg.F)	Imp. Exit Temp. (deg.F)	Stack Temp. (deg.F)	Leak Check
B-5	0/0	513.293	0.225	2.38	2.38	84	7	120	66	72	
B-5	10	522.20	0.225	2.38	2.38	87	7	120	61	72	
B-5	20	531.37	0.227	2.40	2.40	87	7	122	63	71	
A-4	30/0	540.55	0.171	1.81	1.81	83	6	121	66	71	
A-4	10	548.50	0.165	1.74	1.74	83	6	120	64	72	
A-4	20	556.28	0.168	1.78	1.78	84	6	122	65	72	
	60/OFF	564.162									
FINAL DIFF/AVG.		50.869	0.196		2.08	84.67				71.67	

PARTICULATE FIELD DATA & RESULTS TABULATION

PLANT: Greensboro Industrial Platers, Greensboro, North Carolina

RUN #	DATE	SAMPLING LOCATION	TEST TEAM LEADER
TE-5A	03/19/86	Coating Tank #5 - Outlet	B. Dwain Ritchie
TE-5B	03/19/86	Coating Tank #5 - Outlet	B. Dwain Ritchie

		TE-5A	TE-5B
	RUN START TIME	1104	1105
	RUN FINISH TIME	1210	1211
	NET SAMPLING POINTS	2	2
Theta	NET RUN TIME, MINUTES	60.00	60.00
Dia	NOZZLE DIAMETER, INCHES	0.313	0.312
Cp	PITOT TUBE COEFFICIENT	0.840	0.840
Y	DRY GAS METER CALIBRATION FACTOR	0.994	1.002
Pbar	BAROMETRIC PRESSURE, INCHES HG	29.20	29.20
Delta H	AVG. PRESSURE DIFFERENTIAL OF ORIFICE METER, INCHES H2O	2.000	2.080
Vm	VOLUME OF METERED GAS SAMPLE, DRY ACF	46.737	50.869
tm	DRY GAS METER TEMPERATURE, DEGREES F	89	85
Vm(std)	VOLUME OF METERED GAS SAMPLE, DRY SCF*	43.807	48.426
Vlc	TOTAL VOLUME OF LIQUID COLLECTED IN IMPINGERS & SILICA GEL, ML	21.0	25.5
Vw(std)	VOLUME OF WATER VAPOR, SCF*	0.988	1.200
%H2O	MOISTURE CONTENT, PERCENT BY VOLUME	2.2	2.4
Mfd	DRY MOLE FRACTION	0.978	0.976
Md	ESTIMATED DRY MOLECULAR WT, LB/LB-MOLE	28.84	28.84
Ms	WET MOLECULAR WEIGHT, LB/LB-MOLE	28.60	28.57
Pg	FLUE GAS STATIC PRESSURE, INCHES H2O	-0.73	-0.73
Ps	ABSOLUTE FLUE GAS PRESS., INCHES HG	29.15	29.15
ts	FLUE GAS TEMPERATURE, DEGREES F	72	72
Delta p	AVERAGE VELOCITY HEAD, INCHES H2O	0.1870	0.1960
vs	FLUE GAS VELOCITY, FEET/SECOND	24.81	25.41
A	STACK/DUCT AREA, SQUARE INCHES	103.9	103.9
Qsd	VOLUMETRIC AIR FLOW RATE, DRY SCFM*	1,015	1,037
Qaw	VOLUMETRIC AIR FLOW RATE, WET ACFM	1,074	1,100
%I	ISOKINETIC SAMPLING RATE, PERCENT	97.0	105.6

* 68 Degrees F -- 29.92 Inches of Mercury (Hg)

(continued next page)

		TE-5A	TE-5B	
	HEXAVALENT CHROMIUM:			
mg	CATCH, MILLIGRAMS	(2,190.0)	(3,342.0)	
gr/DSCF	CONCENTRATION, GRAINS PER DSCF*	(0.7715)	(1.065)	
Lb/Hr	EMISSION RATE, LBS/HOUR	(6.713)	(9.470)	
	TOTAL CHROMIUM:			
mg	TOTAL CATCH, MILLIGRAMS	(2,137.0)	(3,334.0)	
gr/DSCF	CONCENTRATION, GRAINS PER DSCF*	(0.7528)	(1.062)	
Lb/Hr	EMISSION RATE, LBS/HOUR	(6.550)	(9.448)	
	FLUE GAS TEMPERATURE:			
	Degrees Fahrenheit	72	72	deg. F
	Degrees Centigrade	22	22	deg. C
	AIR FLOW RATES x million:			
	Actual Cubic Meters/hr	0.0018	0.0019	acmh
	Actual Cubic Feet/hr	0.0644	0.0660	acfh
	Dry Std. Cubic Meters/hr*	0.0017	0.0018	dscmh
	Dry Std. Cubic Feet/hr*	0.0609	0.0622	dscfh
	HEXAVALENT CHROMIUM:			
	Concentration, mg/dscm*	(1765.5074)	(2437.2231)	mg/dscm
	Concentration, gr/dscf*	(0.771503)	(1.065034)	gr/dscf
	Emissions, kg/hr	(3.0448)	(4.2956)	kg/hr
	Emissions, lb/hr	(6.7127)	(9.4702)	lb/hr
	TOTAL CHROMIUM:			
	Concentration, mg/dscm*	(1722.7805)	(2431.3889)	mg/dscm
	Concentration, gr/dscf*	(0.752832)	(1.062485)	gr/dscf
	Emissions, kg/hr	(2.9711)	(4.2853)	kg/hr
	Emissions, lb/hr	(6.5502)	(9.4476)	lb/hr

* 68 Degrees F -- 29.92 Inches of Mercury (Hg)

( ) = x 10^{-3}

PLANT	GREENSBORO IND. PLATERS	DATE: 03/19/86	OPERATOR: DR
SAMPLING LOCATION	COATING TANK #5 EXHAUST	RUN NUMBER	TE-6A
FILTER NUMBER(S)	N/A	NOZZLE #, NOZZLE DIAM.	507,.304
BAR. PRESS., in. Hg	29.2	METER BOX ΔH@	1.82
STATIC PRESS., in. H20	-0.73	SAMPLE BOX NUMBER	24
LEAK RATE, CFM	0.000	METER BOX NUMBER	N-5
LEAK TEST VACUUM, in Hg	7	ASSUMED MOISTURE	2

Trav. Point. No.	Sample Time (Min.)	Gas Meter Reading (Cu.Ft.)	Velocity Head (in.H20)	Orifice (in. H20) Desired	ΔH Actual	Gas Meter Temp. (deg. F)	Pump Vac. (in.Hg)	Filter Box Temp. (deg.F)	Imp. Exit Temp. (deg.F)	Stack Temp. (deg.F)	Leak Check
A-4	0/0	308.732	0.190	1.79	1.79	85	7	120	66	75	
A-4	10	316.03	0.158	1.49	1.49	89	6	120	60	75	
A-4	20	322.77	0.158	1.49	1.49	92	6	118	61	75	
B-5	30/0	329.57	0.190	1.79	1.79	90	7	120	66	75	
B-5	10	337.00	0.190	1.79	1.79	90	7	120	62	72	
B-5	20	344.42	0.195	1.84	1.84	91	7	122	63	71	
	60/OFF	351.995									
FINAL											
DIFF/AVG.		43.263	0.180		1.70	89.50				73.83	

PLANT	GREENSBORO IND. PLATERS	DATE: 03/19/86	OPERATOR: DR
SAMPLING LOCATION	COATING TANK #5 EXHAUST	RUN NUMBER	TE-6B
FILTER NUMBER(S)	N/A	NOZZLE #, NOZZLE DIAM.	108,.301
BAR. PRESS., in. Hg	29.2	METER BOX ΔH@	1.63
STATIC PRESS., in. H20	-0.73	SAMPLE BOX NUMBER	5
LEAK RATE, CFM	0.003	METER BOX NUMBER	N-10
LEAK TEST VACUUM, in Hg	11	ASSUMED MOISTURE	2

Trav. Point. No.	Sample Time (Min.)	Gas Meter Reading (Cu.Ft.)	Velocity Head (in.H20)	Orifice ΔH (in. H20) Desired	Orifice ΔH (in. H20) Actual	Gas Meter Temp. (deg. F)	Pump Vac. (in.Hg)	Filter Box Temp. (deg.F)	Imp. Exit Temp. (deg.F)	Stack Temp. (deg.F)	Leak Check
B-5	0/0	564.992	0.187	1.72	1.72	84	11	118	66	75	
B-5	10	572.71	0.180	1.66	1.66	87	10	120	61	75	
B-5	20	580.40	0.192	1.77	1.77	89	10	120	61	75	
A-4	30/0	588.35	0.148	1.36	1.36	86	9	122	66	75	
A-4	10	595.23	0.144	1.32	1.32	86	9	122	62	72	
A-4	20	602.07	0.147	1.35	1.35	86	9	120	64	71	
	60/OFF	609.048									
FINAL DIFF/AVG.		44.056	0.166		1.53	86.33				73.83	

PARTICULATE FIELD DATA & RESULTS TABULATION

PLANT: Greensboro Industrial Platers, Greensboro, North Carolina

RUN #	DATE	SAMPLING LOCATION	TEST TEAM LEADER
TE-6A	03/19/86	Coating Tank #5 - Outlet	B. Dwain Ritchie
TE-6B	03/19/86	Coating Tank #5 - Outlet	B. Dwain Ritchie

		TE-6A	TE-6B
	RUN START TIME	1305	1306
	RUN FINISH TIME	1410	1411
	NET SAMPLING POINTS	2	2
Theta	NET RUN TIME, MINUTES	60.00	60.00
Dia	NOZZLE DIAMETER, INCHES	0.304	0.301
Cp	PITOT TUBE COEFFICIENT	0.840	0.840
Y	DRY GAS METER CALIBRATION FACTOR	0.994	1.002
Pbar	BAROMETRIC PRESSURE, INCHES HG	29.20	29.20
Delta H	AVG. PRESSURE DIFFERENTIAL OF ORIFICE METER, INCHES H2O	1.700	1.530
Vm	VOLUME OF METERED GAS SAMPLE, DRY ACF	43.263	44.056
tm	DRY GAS METER TEMPERATURE, DEGREES F	90	86
Vm(std)	VOLUME OF METERED GAS SAMPLE, DRY SCF*	40.446	41.805
Vlc	TOTAL VOLUME OF LIQUID COLLECTED IN IMPINGERS & SILICA GEL, ML	13.5	21.5
Vw(std)	VOLUME OF WATER VAPOR, SCF*	0.635	1.012
%H2O	MOISTURE CONTENT, PERCENT BY VOLUME	1.5	2.4
Mfd	DRY MOLE FRACTION	0.985	0.976
Md	ESTIMATED DRY MOLECULAR WT, LB/LB-MOLE	28.84	28.84
Ms	WET MOLECULAR WEIGHT, LB/LB-MOLE	28.67	28.58
Pg	FLUE GAS STATIC PRESSURE, INCHES H2O	-0.73	-0.73
Ps	ABSOLUTE FLUE GAS PRESS., INCHES HG	29.15	29.15
ts	FLUE GAS TEMPERATURE, DEGREES F	74	74
Delta p	AVERAGE VELOCITY HEAD, INCHES H2O	0.1800	0.1660
vs	FLUE GAS VELOCITY, FEET/SECOND	24.36	23.43
A	STACK/DUCT AREA, SQUARE INCHES	103.9	103.9
Qsd	VOLUMETRIC AIR FLOW RATE, DRY SCFM*	999.5	953.4
Qaw	VOLUMETRIC AIR FLOW RATE, WET ACFM	1,054	1,014
%I	ISOKINETIC SAMPLING RATE, PERCENT	96.4	106.6

* 68 Degrees F -- 29.92 Inches of Mercury (Hg)

(continued next page)

		TE-6A	TE-6B	
	HEXAVALENT CHROMIUM:			
mg	CATCH, MILLIGRAMS	(2,726.0)	(2,445.0)	
gr/DSCF	CONCENTRATION, GRAINS PER DSCF*	(1.040)	(0.9026)	
Lb/Hr	EMISSION RATE, LBS/HOUR	(8.911)	(7.375)	
	TOTAL CHROMIUM:			
mg	TOTAL CATCH, MILLIGRAMS	(2,743.0)	(2,445.0)	
gr/DSCF	CONCENTRATION, GRAINS PER DSCF*	(1.047)	(0.9026)	
Lb/Hr	EMISSION RATE, LBS/HOUR	(8.966)	(7.375)	
	FLUE GAS TEMPERATURE:			
	Degrees Fahrenheit	74	74	deg. F
	Degrees Centigrade	23	23	deg. C
	AIR FLOW RATES x million:			
	Actual Cubic Meters/hr	0.0018	0.0017	acmh
	Actual Cubic Feet/hr	0.0633	0.0608	acfh
	Dry Std. Cubic Meters/hr*	0.0017	0.0016	dscmh
	Dry Std. Cubic Feet/hr*	0.0600	0.0572	dscfh
	HEXAVALENT CHROMIUM:			
	Concentration, mg/dscm*	(2380.1941)	(2065.4312)	mg/dscm
	Concentration, gr/dscf*	(1.040113)	(0.902566)	gr/dscf
	Emissions, kg/hr	(4.0419)	(3.3454)	kg/hr
	Emissions, lb/hr	(8.9108)	(7.3754)	lb/hr
	TOTAL CHROMIUM:			
	Concentration, mg/dscm*	(2395.0376)	(2065.4312)	mg/dscm
	Concentration, gr/dscf*	(1.046600)	(0.902566)	gr/dscf
	Emissions, kg/hr	(4.0671)	(3.3454)	kg/hr
	Emissions, lb/hr	(8.9664)	(7.3754)	lb/hr

* 68 Degrees F -- 29.92 Inches of Mercury (Hg)

( ) = x 10^{-3}

PLANT	GREENSBORO IND. PLATERS	DATE: 03/24/86	OPERATOR: DR
SAMPLING LOCATION	COATING TANK #5 EXHAUST	RUN NUMBER	TE-7A
FILTER NUMBER(S)		NOZZLE #, NOZZLE DIAM.	508, .313
BAR. PRESS., in. Hg	29.5	METER BOX ΔH@	1.82
STATIC PRESS., in. H20	-0.73	SAMPLE BOX NUMBER	11
LEAK RATE, CFM	0.000	METER BOX NUMBER	N-5
LEAK TEST VACUUM, in Hg	7	ASSUMED MOISTURE	2

Trav. Point. No.	Sample Time (Min.)	Gas Meter Reading (Cu.Ft.)	Velocity Head (in.H20)	Orifice ΔH (in. H20) Desired	Orifice ΔH (in. H20) Actual	Gas Meter Temp. (deg. F)	Pump Vac. (in.Hg)	Filter Box Temp. (deg.F)	Imp. Exit Temp. (deg.F)	Stack Temp. (deg.F)	Leak Check
B-5	0/0	352.403	0.206	2.23	2.23	81	7	NA	66	72	
	10	360.40	0.207	2.24	2.24	84	7	NA	56	72	
	20	368.47	0.207	2.24	2.24	86	7	NA	55	72	
A-4	30/0	376.63	0.170	1.84	1.84	85	6	NA	63	72	
	10	384.02	0.176	1.90	1.90	87	6	NA	55	72	
	20	391.48	0.176	1.90	1.90	87	6	NA	55	71	
	60/OFF	399.048									
FINAL DIFF/AVG.		46.645	0.190		2.058	85				71.833	

PLANT	GREENSBORO IND. PLATERS	DATE: 03/24/86	OPERATOR: DR
SAMPLING LOCATION	COATING TANK #5 EXHAUST	RUN NUMBER	TE-7B
FILTER NUMBER(S)		NOZZLE #, NOZZLE DIAM.	509, .312
BAR. PRESS., in. Hg	29.5	METER BOX ΔH@	1.58
STATIC PRESS., in. H20	-0.78	SAMPLE BOX NUMBER	13
LEAK RATE, CFM	0.000	METER BOX NUMBER	N-2
LEAK TEST VACUUM, in Hg	5	ASSUMED MOISTURE	2

Trav. Point. No.	Sample Time (Min.)	Gas Meter Reading (Cu.Ft.)	Velocity Head (in.H20)	Orifice ΔH (in. H20) Desired	Orifice ΔH (in. H20) Actual	Gas Meter Temp. (deg. F)	Pump Vac. (in.Hg)	Filter Box Temp. (deg.F)	Imp. Exit Temp. (deg.F)	Stack Temp. (deg.F)	Leak Check
A-4	0/0	482.724	0.168	1.59	1.59	91	3	NA	66	72	
	10	489.99	0.166	1.57	1.57	92	3	NA	57	72	
	20	497.24	0.175	1.65	1.65	93	3	NA	57	72	
B-5	30/0	504.86	0.220	2.08	2.08	92	4	NA	62	72	
	10	513.34	0.227	2.14	2.14	94	4	NA	56	72	
	20	522.08	0.227	2.14	2.14	95	4	NA	56	71	
	60/OFF	530.907									
FINAL DIFF/AVG.		48.183	0.196		1.862	92.83				71.833	

PARTICULATE FIELD DATA & RESULTS TABULATION

PLANT: Greensboro Industrial Platers, Greensboro, North Carolina

RUN #	DATE	SAMPLING LOCATION	TEST TEAM LEADER
TE-7A	03/24/86	Coating Tank #5 Exhaust	B. Dwain Ritchie
TE-7B	03/24/86	Coating Tank #5 Exhaust	B. Dwain Ritchie

		TE-7A	TE-7B
	RUN START TIME	1305	1306
	RUN FINISH TIME	1410	1411
	NET SAMPLING POINTS	2	2
Theta	NET RUN TIME, MINUTES	60.00	60.00
Dia	NOZZLE DIAMETER, INCHES	0.313	0.312
Cp	PITOT TUBE COEFFICIENT	0.840	0.840
Y	DRY GAS METER CALIBRATION FACTOR	0.994	0.998
Pbar	BAROMETRIC PRESSURE, INCHES HG	29.50	29.50
Delta H	AVG. PRESSURE DIFFERENTIAL OF ORIFICE METER, INCHES H2O	2.060	1.860
Vm	VOLUME OF METERED GAS SAMPLE, DRY ACF	46.645	48.183
tm	DRY GAS METER TEMPERATURE, DEGREES F	85	93
Vm(std)	VOLUME OF METERED GAS SAMPLE, DRY SCF*	44.498	45.460
Vlc	TOTAL VOLUME OF LIQUID COLLECTED IN IMPINGERS & SILICA GEL, ML	10.5	16.5
Vw(std)	VOLUME OF WATER VAPOR, SCF*	0.494	0.777
%H2O	MOISTURE CONTENT, PERCENT BY VOLUME	1.1	1.7
Mfd	DRY MOLE FRACTION	0.989	0.983
Md	ESTIMATED DRY MOLECULAR WT. LB/LB-MOLE	28.84	28.84
Ms	WET MOLECULAR WEIGHT, LB/LB-MOLE	28.72	28.65
Pg	FLUE GAS STATIC PRESSURE, INCHES H2O	-0.73	-0.78
Ps	ABSOLUTE FLUE GAS PRESS., INCHES HG	29.45	29.44
ts	FLUE GAS TEMPERATURE, DEGREES F	72	72
Delta p	AVERAGE VELOCITY HEAD, INCHES H2O	0.1900	0.1960
vs	FLUE GAS VELOCITY, FEET/SECOND	24.83	25.25
A	STACK/DUCT AREA, SQUARE INCHES	103.9	103.9
Qsd	VOLUMETRIC AIR FLOW RATE, DRY SCFM*	1,038	1,049
Qaw	VOLUMETRIC AIR FLOW RATE, WET ACFM	1,075	1,093
%I	ISOKINETIC SAMPLING RATE, PERCENT	96.4	98.0

* 68 Degrees F -- 29.92 Inches of Mercury (Hg)

(continued next page)

		TE-7A	TE-7B	
	HEXAVALENT CHROMIUM:			
mg	CATCH, MILLIGRAMS	(5,550.0)	(5,194.0)	
gr/DSCF	CONCENTRATION, GRAINS PER DSCF*	(1.925)	(1.763)	
Lb/Hr	EMISSION RATE, LBS/HOUR	(17.12)	(15.86)	
	TOTAL CHROMIUM:			
mg	TOTAL CATCH, MILLIGRAMS	(5,250.0)	(5,164.0)	
gr/DSCF	CONCENTRATION, GRAINS PER DSCF*	(1.821)	(1.753)	
Lb/Hr	EMISSION RATE, LBS/HOUR	(16.20)	(15.76)	
	FLUE GAS TEMPERATURE:			
	Degrees Fahrenheit	72	72	deg. F
	Degrees Centigrade	22	22	deg. C
	AIR FLOW RATES x million:			
	Actual Cubic Meters/hr	0.0018	0.0019	acmh
	Actual Cubic Feet/hr	0.0645	0.0656	acfh
	Dry Std. Cubic Meters/hr*	0.0018	0.0018	dscmh
	Dry Std. Cubic Feet/hr*	0.0623	0.0629	dscfh
	HEXAVALENT CHROMIUM:			
	Concentration, mg/dscm*	(4404.7031)	(4034.9372)	mg/dscm
	Concentration, gr/dscf*	(1.924797)	(1.763214)	gr/dscf
	Emissions, kg/hr	(7.7673)	(7.1917)	kg/hr
	Emissions, lb/hr	(17.1241)	(15.8551)	lb/hr
	TOTAL CHROMIUM:			
	Concentration, mg/dscm*	(4166.6111)	(4011.6319)	mg/dscm
	Concentration, gr/dscf*	(1.820754)	(1.753030)	gr/dscf
	Emissions, kg/hr	(7.3475)	(7.1502)	kg/hr
	Emissions, lb/hr	(16.1984)	(15.7635)	lb/hr

* 68 Degrees F -- 29.92 Inches of Mercury (Hg)

( ) = x 10^{-3}

PLANT	GREENSBORO IND. PLATERS	DATE: 03/24/86	OPERATOR: DR
SAMPLING LOCATION	COATING TANK #5 EXHAUST	RUN NUMBER	TE-8A
FILTER NUMBER(S)		NOZZLE #, NOZZLE DIAM.	507, .304
BAR. PRESS., in. Hg	29.5	METER BOX ΔH@	1.82
STATIC PRESS., in. H20		SAMPLE BOX NUMBER	24
LEAK RATE, CFM	0.007	METER BOX NUMBER	N-5
LEAK TEST VACUUM, in Hg	7	ASSUMED MOISTURE	2

Trav. Point. No.	Sample Time (Min.)	Gas Meter Reading (Cu.Ft.)	Velocity Head (in.H20)	Orifice ΔH (in. H20) Desired	Actual	Gas Meter Temp. (deg. F)	Pump Vac. (in.Hg)	Filter Box Temp. (deg.F)	Imp. Exit Temp. (deg.F)	Stack Temp. (deg.F)	Leak Check
A-4	0/0	399.372	0.165	1.61	1.61	84	6	NA	65	72	
	10	406.18	0.166	1.62	1.62	86	6	NA	55	72	
	20	413.11	0.164	1.60	1.60	87	6	NA	55	72	
B-5	30/0	420.01	0.205	2.00	2.00	86	7	NA	64	72	
	10	427.62	0.207	2.04	2.04	88	7	NA	56	72	
	20	435.50	0.207	2.04	2.04	89	7	NA	56	72	
	60/OFF	443.307									
FINAL DIFF/AVG.		43.935	0.185		1.818	86.67				72	

PLANT	GREENSBORO IND. PLATERS	DATE: 03/24/86	OPERATOR: DR
SAMPLING LOCATION	COATING TANK #5 EXHAUST	RUN NUMBER	TE-8B
FILTER NUMBER(S)		NOZZLE #, NOZZLE DIAM.	108, .301
BAR. PRESS., in. Hg	29.5	METER BOX ΔH@	1.58
STATIC PRESS., in. H20		SAMPLE BOX NUMBER	5
LEAK RATE, CFM	0.000	METER BOX NUMBER	N-2
LEAK TEST VACUUM, in Hg	7	ASSUMED MOISTURE	2

Tray. Point. No.	Sample Time (Min.)	Gas Meter Reading (Cu.Ft.)	Velocity Head (in.H20)	Orifice ΔH (in. H20) Desired	Orifice ΔH (in. H20) Actual	Gas Meter Temp. (deg. F)	Pump Vac. (in.Hg)	Filter Box Temp. (deg.F)	Imp. Exit Temp. (deg.F)	Stack Temp. (deg.F)	Leak Check
B-5	0/0	531.108	0.194	1.60	1.60	93	7	NA	64	72	
	10	538.58	0.198	1.63	1.63	94	7	NA	56	72	
	20	546.23	0.198	1.63	1.63	95	7	NA	56	72	
A-4	30/0	553.95	0.155	1.28	1.28	94	6	NA	64	72	
	10	560.78	0.155	1.28	1.28	95	6	NA	57	72	
	20	567.67	0.155	1.28	1.28	96	6	NA	56	72	
	60/OFF	574.562									
FINAL DIFF/AVG.		43.454	0.175		1.45	94.5				72	

PARTICULATE FIELD DATA & RESULTS TABULATION

PLANT: Greensboro Industrial Platers, Greensboro, North Carolina

RUN #	DATE	SAMPLING LOCATION	TEST TEAM LEADER
TE-8A	03/24/86	Coating Tank #5 Exhaust	B. Dwain Ritchie
TE-8B	03/24/86	Coating Tank #5 Exhaust	B. Dwain Ritchie

		TE-8A	TE-8B
	RUN START TIME	1442	1443
	RUN FINISH TIME	1545	1546
	NET SAMPLING POINTS	2	2
Theta	NET RUN TIME, MINUTES	60.00	60.00
Dia	NOZZLE DIAMETER, INCHES	0.304	0.301
Cp	PITOT TUBE COEFFICIENT	0.840	0.840
Y	DRY GAS METER CALIBRATION FACTOR	0.994	0.998
Pbar	BAROMETRIC PRESSURE, INCHES HG	29.50	29.50
Delta H	AVG. PRESSURE DIFFERENTIAL OF ORIFICE METER, INCHES H2O	1.820	1.450
Vm	VOLUME OF METERED GAS SAMPLE, DRY ACF	43.935	43.454
tm	DRY GAS METER TEMPERATURE, DEGREES F	87	95
Vm(std)	VOLUME OF METERED GAS SAMPLE, DRY SCF*	41.735	40.809
Vlc	TOTAL VOLUME OF LIQUID COLLECTED IN IMPINGERS & SILICA GEL, ML	11.0	12.0
Vw(std)	VOLUME OF WATER VAPOR, SCF*	0.518	0.565
%H2O	MOISTURE CONTENT, PERCENT BY VOLUME	1.2	1.4
Mfd	DRY MOLE FRACTION	0.988	0.986
Md	ESTIMATED DRY MOLECULAR WT, LB/LB-MOLE	28.84	28.84
Ms	WET MOLECULAR WEIGHT, LB/LB-MOLE	28.70	28.69
Pg	FLUE GAS STATIC PRESSURE, INCHES H2O	-0.75	-0.75
Ps	ABSOLUTE FLUE GAS PRESS., INCHES HG	29.44	29.44
ts	FLUE GAS TEMPERATURE, DEGREES F	72	72
Delta p	AVERAGE VELOCITY HEAD, INCHES H2O	0.1850	0.1750
vs	FLUE GAS VELOCITY, FEET/SECOND	24.51	23.84
A	STACK/DUCT AREA, SQUARE INCHES	103.9	103.9
Qsd	VOLUMETRIC AIR FLOW RATE, DRY SCFM*	1,023	993.9
Qaw	VOLUMETRIC AIR FLOW RATE, WET ACFM	1,061	1,032
%I	ISOKINETIC SAMPLING RATE, PERCENT	97.2	99.8

* 68 Degrees F -- 29.92 Inches of Mercury (Hg)

(continued next page)

		TE-8A	TE-8B	
	HEXAVALENT CHROMIUM:			
mg	CATCH, MILLIGRAMS	(3,250.0)	(3,262.0)	
gr/DSCF	CONCENTRATION, GRAINS PER DSCF*	(1.202)	(1.234)	
Lb/Hr	EMISSION RATE, LBS/HOUR	(10.54)	(10.51)	
	TOTAL CHROMIUM:			
mg	TOTAL CATCH, MILLIGRAMS	(3,150.0)	(3,452.0)	
gr/DSCF	CONCENTRATION, GRAINS PER DSCF*	(1.165)	(1.305)	
Lb/Hr	EMISSION RATE, LBS/HOUR	(10.21)	(11.12)	
	FLUE GAS TEMPERATURE:			
	Degrees Fahrenheit	72	72	deg. F
	Degrees Centigrade	22	22	deg. C
	AIR FLOW RATES x million:			
	Actual Cubic Meters/hr	0.0018	0.0018	acmh
	Actual Cubic Feet/hr	0.0637	0.0619	acfh
	Dry Std. Cubic Meters/hr*	0.0017	0.0017	dscmh
	Dry Std. Cubic Feet/hr*	0.0614	0.0596	dscfh
	HEXAVALENT CHROMIUM:			
	Concentration, mg/dscm*	(2750.1150)	(2822.8820)	mg/dscm
	Concentration, gr/dscf*	(1.201764)	(1.233562)	gr/dscf
	Emissions, kg/hr	(4.7803)	(4.7668)	kg/hr
	Emissions, lb/hr	(10.5387)	(10.5090)	lb/hr
	TOTAL CHROMIUM:			
	Concentration, mg/dscm*	(2665.4961)	(2987.3049)	mg/dscm
	Concentration, gr/dscf*	(1.164786)	(1.305412)	gr/dscf
	Emissions, kg/hr	(4.6332)	(5.0444)	kg/hr
	Emissions, lb/hr	(10.2144)	(11.1211)	lb/hr

* 68 Degrees F -- 29.92 Inches of Mercury (Hg)

( ) = x 10^{-3}

PLANT	GREENSBORO IND. PLATERS	DATE: 03/25/86	OPERATOR: DR
SAMPLING LOCATION	COATING TANK #5 EXHAUST	RUN NUMBER	TE-9A
FILTER NUMBER(S)		NOZZLE #, NOZZLE DIAM.	508, .313
BAR. PRESS., in. Hg	29.5	METER BOX ΔH@	1.82
STATIC PRESS., in. H20	-0.75	SAMPLE BOX NUMBER	11
LEAK RATE, CFM	0.018	METER BOX NUMBER	N-5
LEAK TEST VACUUM, in Hg	7	ASSUMED MOISTURE	2

Trav. Point. No.	Sample Time (Min.)	Gas Meter Reading (Cu.Ft.)	Velocity Head (in.H20)	Orifice ΔH (in. H20) Desired	Orifice ΔH (in. H20) Actual	Gas Meter Temp. (deg. F)	Pump Vac. (in.Hg)	Filter Box Temp. (deg.F)	Imp. Exit Temp. (deg.F)	Stack Temp. (deg.F)	Leak Check
A-4	0/0	443.783	0.147	1.59	1.59	66	5	NA	62	65	
	10	450.48	0.147	1.59	1.59	71	5	NA	54	66	
	20	457.36	0.147	1.59	1.59	73	5	NA	56	66	
B-5	30/0	464.08	0.212	2.29	2.29	73	7	NA	56	66	
	10	472.18	0.213	2.30	2.30	76	7	NA	57	67	
	20	480.36	0.214	2.32	2.32	78	7	NA	57	68	
	60/OFF	488.911									
FINAL DIFF/AVG.		45.128	0.178		1.947	72.83				66.333	

PLANT	GREENSBORO IND. PLATERS	DATE: 03/25/86	OPERATOR: DR
SAMPLING LOCATION	COATING TANK #5 EXHAUST	RUN NUMBER	TE-9B
FILTER NUMBER(S)		NOZZLE #, NOZZLE DIAM.	509, .312
BAR. PRESS., in. Hg	29.5	METER BOX ΔH@	1.58
STATIC PRESS., in. H2O	-0.73	SAMPLE BOX NUMBER	13
LEAK RATE, CFM	0.000	METER BOX NUMBER	N-2
LEAK TEST VACUUM, in Hg	5	ASSUMED MOISTURE	2

Trav. Point. No.	Sample Time (Min.)	Gas Meter Reading (Cu.Ft.)	Velocity Head (in.H2O)	Orifice (in. H2O) Desired	ΔH Actual	Gas Meter Temp. (deg. F)	Pump Vac. (in.Hg)	Filter Box Temp. (deg.F)	Imp. Exit Temp. (deg.F)	Stack Temp. (deg.F)	Leak Check
B-5	0/0	577.360	0.222	2.09	2.09	64	4	NA	62	65	
	10	584.44	0.219	2.07	2.07	74	4	NA	53	66	
	20	591.68	0.222	2.09	2.09	79	4	NA	54	66	
A-4	30/0	598.85	0.168	1.59	1.59	80	3	NA	65	66	
	10	605.01	0.168	1.59	1.59	83	3	NA	56	67	
	20	611.40	0.165	1.56	1.56	85	3	NA	56	68	
	60/OFF	617.714									
FINAL DIFF/AVG.		40.354	0.193		1.832	77.5				66.333	

PARTICULATE FIELD DATA & RESULTS TABULATION

PLANT: Greensboro Industrial Platers, Greensboro, North Carolina

RUN #	DATE	SAMPLING LOCATION	TEST TEAM LEADER
TE-9A	03/25/86	Coating Tank #5 Exhaust	B. Dwain Ritchie
TE-9B	03/25/86	Coating Tank #5 Exhaust	B. Dwain Ritchie

		TE-9A	TE-9B
	RUN START TIME	820	821
	RUN FINISH TIME	925	926
	NET SAMPLING POINTS	2	2
Theta	NET RUN TIME, MINUTES	60.00	60.00
Dia	NOZZLE DIAMETER, INCHES	0.313	0.312
Cp	PITOT TUBE COEFFICIENT	0.840	0.840
Y	DRY GAS METER CALIBRATION FACTOR	0.994	0.998
Pbar	BAROMETRIC PRESSURE, INCHES HG	29.50	29.50
Delta H	AVG. PRESSURE DIFFERENTIAL OF ORIFICE METER, INCHES H2O	1.950	1.830
Vm	VOLUME OF METERED GAS SAMPLE, DRY ACF	45.128	40.354
tm	DRY GAS METER TEMPERATURE, DEGREES F	73	78
Vm(std)	VOLUME OF METERED GAS SAMPLE, DRY SCF*	44.008	39.132
Vlc	TOTAL VOLUME OF LIQUID COLLECTED IN IMPINGERS & SILICA GEL, ML	12.0	7.0
Vw(std)	VOLUME OF WATER VAPOR, SCF*	0.565	0.329
%H2O	MOISTURE CONTENT, PERCENT BY VOLUME	1.3	0.8
Mfd	DRY MOLE FRACTION	0.987	0.992
Md	ESTIMATED DRY MOLECULAR WT, LB/LB-MOLE	28.84	28.84
Ms	WET MOLECULAR WEIGHT, LB/LB-MOLE	28.70	28.75
Pg	FLUE GAS STATIC PRESSURE, INCHES H2O	-0.75	-0.73
Ps	ABSOLUTE FLUE GAS PRESS., INCHES HG	29.44	29.45
ts	FLUE GAS TEMPERATURE, DEGREES F	66	66
Delta p	AVERAGE VELOCITY HEAD, INCHES H2O	0.1780	0.1930
vs	FLUE GAS VELOCITY, FEET/SECOND	23.90	24.87
A	STACK/DUCT AREA, SQUARE INCHES	103.9	103.9
Qsd	VOLUMETRIC AIR FLOW RATE, DRY SCFM*	1,009	1,054
Qaw	VOLUMETRIC AIR FLOW RATE, WET ACFM	1,035	1,077
%I	ISOKINETIC SAMPLING RATE, PERCENT	98.0	84.0

* 68 Degrees F -- 29.92 Inches of Mercury (Hg)

(continued next page)

		TE-9A	TE-9B	
	HEXAVALENT CHROMIUM:			
mg	CATCH, MILLIGRAMS	(2,950.0)	(3,142.0)	
gr/DSCF	CONCENTRATION, GRAINS PER DSCF*	(1.034)	(1.239)	
Lb/Hr	EMISSION RATE, LBS/HOUR	(8.946)	(11.20)	
	TOTAL CHROMIUM:			
mg	TOTAL CATCH, MILLIGRAMS	(2,850.0)	(3,025.0)	
gr/DSCF	CONCENTRATION, GRAINS PER DSCF*	(0.9994)	(1.193)	
Lb/Hr	EMISSION RATE, LBS/HOUR	(8.643)	(10.78)	
	FLUE GAS TEMPERATURE:			
	Degrees Fahrenheit	66	66	deg. F
	Degrees Centigrade	19	19	deg. C
	AIR FLOW RATES x million:			
	Actual Cubic Meters/hr	0.0018	0.0018	acmh
	Actual Cubic Feet/hr	0.0621	0.0646	acfh
	Dry Std. Cubic Meters/hr*	0.0017	0.0018	dscmh
	Dry Std. Cubic Feet/hr*	0.0605	0.0633	dscfh
	HEXAVALENT CHROMIUM:			
	Concentration, mg/dscm*	(2367.3031)	(2835.5528)	mg/dscm
	Concentration, gr/dscf*	(1.034480)	(1.239099)	gr/dscf
	Emissions, kg/hr	(4.0578)	(5.0792)	kg/hr
	Emissions, lb/hr	(8.9459)	(11.1978)	lb/hr
	TOTAL CHROMIUM:			
	Concentration, mg/dscm*	(2287.0556)	(2729.9641)	mg/dscm
	Concentration, gr/dscf*	(0.999413)	(1.192958)	gr/dscf
	Emissions, kg/hr	(3.9203)	(4.8901)	kg/hr
	Emissions, lb/hr	(8.6427)	(10.7808)	lb/hr

* 68 Degrees F -- 29.92 Inches of Mercury (Hg)

( ) = x 10^{-3}

PLANT	GREENSBORO IND. PLATERS	DATE: 03/25/86	OPERATOR: DR
SAMPLING LOCATION	COATING TANK #5 EXHAUST	RUN NUMBER	TE-10A
FILTER NUMBER(S)		NOZZLE #, NOZZLE DIAM.	507, .304
BAR. PRESS., in. Hg	29.5	METER BOX ΔH@	1.82
STATIC PRESS., in. H20		SAMPLE BOX NUMBER	24
LEAK RATE, CFM	0.000	METER BOX NUMBER	N-5
LEAK TEST VACUUM, in Hg	8	ASSUMED MOISTURE	2

Trav. Point. No.	Sample Time (Min.)	Gas Meter Reading (Cu.Ft.)	Velocity Head (in.H20)	Orifice (in. H20) Desired	ΔH Actual	Gas Meter Temp. (deg. F)	Pump Vac. (in.Hg)	Filter Box Temp. (deg.F)	Imp. Exit Temp. (deg.F)	Stack Temp. (deg.F)	Leak Check
A-4	0/0	488.769	0.166	1.56	1.56	71	6	NA	65	70	
	10	495.35	0.166	1.56	1.56	73	6	NA	58	71	
	20	502.06	0.170	1.60	1.60	76	6	NA	57	70	
B-5	30/0	508.87	0.218	2.05	2.05	78	8	NA	62	70	
	10	516.61	0.211	1.98	1.98	83	8	NA	56	70	
	20	524.18	0.208	1.95	1.95	85	8	NA	57	71	
	60/OFF	531.773									
FINAL DIFF/AVG.		43.004	0.189		1.783	77.67				70.333	

PLANT	GREENSBORO IND. PLATERS	DATE: 03/25/86	OPERATOR: DR
SAMPLING LOCATION	COATING TANK #5 EXHAUST	RUN NUMBER	TE-10B
FILTER NUMBER(S)		NOZZLE #, NOZZLE DIAM.	108, .301
BAR. PRESS., in. Hg	29.5	METER BOX ΔH@	1.58
STATIC PRESS., in. H20		SAMPLE BOX NUMBER	5
LEAK RATE, CFM	0.000	METER BOX NUMBER	N-2
LEAK TEST VACUUM, in Hg	6	ASSUMED MOISTURE	2

Trav. Point. No.	Sample Time (Min.)	Gas Meter Reading (Cu.Ft.)	Velocity Head (in.H20)	Orifice ΔH (in. H20) Desired	Orifice ΔH (in. H20) Actual	Gas Meter Temp. (deg. F)	Pump Vac. (in.Hg)	Filter Box Temp. (deg.F)	Imp. Exit Temp. (deg.F)	Stack Temp. (deg.F)	Leak Check
B-5	0/0	624.041	0.202	1.65	1.65	81	6	NA	65	70	
	10	630.44	0.202	1.65	1.65	84	6	NA	57	71	
	20	637.02	0.207	1.69	1.69	87	6	NA	58	70	
	30/0	643.75	0.155	1.27	1.27	88	5	NA	63	70	
	10	649.30	0.151	1.23	1.23	90	5	NA	57	70	
	20	654.92	0.151	1.21	1.21	91	5	NA	57	71	
	60/OFF	660.450	0.148								
FINAL DIFF/AVG.		36.409	0.177		1.45	86.83				70.333	

PARTICULATE FIELD DATA & RESULTS TABULATION

PLANT: Greensboro Industrial Platers, Greensboro, North Carolina

RUN #	DATE	SAMPLING LOCATION	TEST TEAM LEADER
TE-10A	03/25/86	Coating Tank #5 Exhaust	B. Dwain Ritchie
TE-10B	03/25/86	Coating Tank #5 Exhaust	B. Dwain Ritchie

		TE-10A	TE-10B
	RUN START TIME	1016	1017
	RUN FINISH TIME	1119	1120
	NET SAMPLING POINTS	2	1
Theta	NET RUN TIME, MINUTES	60.00	60.00
Dia	NOZZLE DIAMETER, INCHES	0.304	0.301
Cp	PITOT TUBE COEFFICIENT	0.840	0.840
Y	DRY GAS METER CALIBRATION FACTOR	0.994	0.998
Pbar	BAROMETRIC PRESSURE, INCHES HG	29.50	29.50
Delta H	AVG. PRESSURE DIFFERENTIAL OF ORIFICE METER, INCHES H2O	1.830	1.450
Vm	VOLUME OF METERED GAS SAMPLE, DRY ACF	43.004	36.409
tm	DRY GAS METER TEMPERATURE, DEGREES F	78	87
Vm(std)	VOLUME OF METERED GAS SAMPLE, DRY SCF*	41.535	34.693
Vlc	TOTAL VOLUME OF LIQUID COLLECTED IN IMPINGERS & SILICA GEL, ML	8.5	0.0
Vw(std)	VOLUME OF WATER VAPOR, SCF*	0.400	0.000
%H2O	MOISTURE CONTENT, PERCENT BY VOLUME	1.0	0.0
Mfd	DRY MOLE FRACTION	0.990	1.000
Md	ESTIMATED DRY MOLECULAR WT, LB/LB-MOLE	28.84	28.84
Ms	WET MOLECULAR WEIGHT, LB/LB-MOLE	28.73	28.84
Pg	FLUE GAS STATIC PRESSURE, INCHES H2O	-0.73	-0.73
Ps	ABSOLUTE FLUE GAS PRESS., INCHES HG	29.45	29.45
ts	FLUE GAS TEMPERATURE, DEGREES F	70	70
Delta p	AVERAGE VELOCITY HEAD, INCHES H2O	0.1890	0.1770
vs	FLUE GAS VELOCITY, FEET/SECOND	24.71	23.87
A	STACK/DUCT AREA, SQUARE INCHES	103.9	103.9
Qsd	VOLUMETRIC AIR FLOW RATE, DRY SCFM*	1,038	1,013
Qaw	VOLUMETRIC AIR FLOW RATE, WET ACFM	1,070	1,033
%I	ISOKINETIC SAMPLING RATE, PERCENT	95.3	83.3

* 68 Degrees F -- 29.92 Inches of Mercury (Hg)

(continued next page)

		TE-10A	TE-10B	
	HEXAVALENT CHROMIUM:			
mg	CATCH, MILLIGRAMS	(2,940.0)	(3,849.0)	
gr/DSCF	CONCENTRATION, GRAINS PER DSCF*	(1.092)	(1.712)	
Lb/Hr	EMISSION RATE, LBS/HOUR	(9.723)	(14.86)	
	TOTAL CHROMIUM:			
mg	TOTAL CATCH, MILLIGRAMS	(2,800.0)	(3,887.0)	
gr/DSCF	CONCENTRATION, GRAINS PER DSCF*	(1.040)	(1.729)	
Lb/Hr	EMISSION RATE, LBS/HOUR	(9.260)	(15.01)	
	FLUE GAS TEMPERATURE:			
	Degrees Fahrenheit	70	70	deg. F
	Degrees Centigrade	21	21	deg. C
	AIR FLOW RATES x million:			
	Actual Cubic Meters/hr	0.0018	0.0018	acmh
	Actual Cubic Feet/hr	0.0642	0.0620	acfh
	Dry Std. Cubic Meters/hr*	0.0018	0.0017	dscmh
	Dry Std. Cubic Feet/hr*	0.0623	0.0608	dscfh
	HEXAVALENT CHROMIUM:			
	Concentration, mg/dscm*	(2499.7742)	(3918.0685)	mg/dscm
	Concentration, gr/dscf*	(1.092368)	(1.712144)	gr/dscf
	Emissions, kg/hr	(4.4101)	(6.7415)	kg/hr
	Emissions, lb/hr	(9.7225)	(14.8624)	lb/hr
	TOTAL CHROMIUM:			
	Concentration, mg/dscm*	(2380.7373)	(3956.7504)	mg/dscm
	Concentration, gr/dscf*	(1.040351)	(1.729047)	gr/dscf
	Emissions, kg/hr	(4.2000)	(6.8080)	kg/hr
	Emissions, lb/hr	(9.2595)	(15.0091)	lb/hr

* 68 Degrees F -- 29.92 Inches of Mercury (Hg)

( ) = x 10^{-3}

PLANT	GREENSBORO IND. PLATERS	DATE: 03/25/86	OPERATOR: DR
SAMPLING LOCATION	COATING TANK #5 EXHAUST	RUN NUMBER	TE-11A
FILTER NUMBER(S)		NOZZLE #, NOZZLE DIAM.	508, .313
BAR. PRESS., in. Hg	29.5	METER BOX ΔH@	1.82
STATIC PRESS., in. H20	-0.73	SAMPLE BOX NUMBER	11
LEAK RATE, CFM	0.000	METER BOX NUMBER	N-5
LEAK TEST VACUUM, in Hg	7	ASSUMED MOISTURE	2

Trav. Point. No.	Sample Time (Min.)	Gas Meter Reading (Cu.Ft.)	Velocity Head (in.H20)	Orifice ΔH (in. H20) Desired	Actual	Gas Meter Temp. (deg. F)	Pump Vac. (in.Hg)	Filter Box Temp. (deg.F)	Imp. Exit Temp. (deg.F)	Stack Temp. (deg.F)	Leak Check
B-5	0/0	540.873	0.204	2.25	2.25	86	6	NA	66	72	
	10	549.00	0.221	2.43	2.43	89	7	NA	59	72	
	20	557.34	0.214	2.35	2.35	91	7	NA	56	72	
A-4	30/0	565.75	0.178	1.96	1.96	89	6	NA	65	72	
	10	573.37	0.177	1.95	1.95	92	6	NA	58	72	
	20	581.07	0.177	1.95	1.95	92	6	NA	58	72	
	60/OFF	588.757									
FINAL DIFF/AVG.		47.884	0.195		2.148	89.83				72	

PLANT	GREENSBORO IND. PLATERS	DATE: 03/25/86	OPERATOR: DR
SAMPLING LOCATION	COATING TANK #5 EXHAUST	RUN NUMBER	TE-11B
FILTER NUMBER(S)		NOZZLE #, NOZZLE DIAM.	509, .312
BAR. PRESS., in. Hg	29.5	METER BOX ΔH@	1.60
STATIC PRESS., in. H20	-0.56	SAMPLE BOX NUMBER	13
LEAK RATE, CFM	0.018	METER BOX NUMBER	N-9
LEAK TEST VACUUM, in Hg	3	ASSUMED MOISTURE	2

Trav. Point. No.	Sample Time (Min.)	Gas Meter Reading (Cu.Ft.)	Velocity Head (in.H20)	Orifice (in. H20) Desired	ΔH Actual	Gas Meter Temp. (deg. F)	Pump Vac. (in.Hg)	Filter Box Temp. (deg.F)	Imp. Exit Temp. (deg.F)	Stack Temp. (deg.F)	Leak Check
A-4	0/0	472.318	0.188	1.85	1.85	86	2	NA	66	72	
	10	480.51	0.192	1.89	1.89	88	2	NA	60	72	
	20	489.08	0.190	1.87	1.87	89	2	NA	57	72	
B-5	30/0	497.57	0.235	2.31	2.31	88	3	NA	65	72	
	10	506.99	0.233	2.29	2.29	90	3	NA	58	72	
	20	516.50	0.237	2.33	2.33	91	3	NA	57	72	
	60/OFF	526.137									
FINAL DIFF/AVG.		53.819	0.212		2.09	88.67				72	

PARTICULATE FIELD DATA & RESULTS TABULATION

PLANT: Greensboro Industrial Platers, Greensboro, North Carolina

RUN #	DATE	SAMPLING LOCATION	TEST TEAM LEADER
TE-11A	03/25/86	Coating Tank #5 Exhaust	B. Dwain Ritchie
TE-11B	03/25/86	Coating Tank #5 Exhaust	B. Dwain Ritchie

		TE-11A	TE-11B
	RUN START TIME	1332	1333
	RUN FINISH TIME	1436	1437
	NET SAMPLING POINTS	2	2
Theta	NET RUN TIME, MINUTES	60.00	60.00
Dia	NOZZLE DIAMETER, INCHES	0.313	0.312
Cp	PITOT TUBE COEFFICIENT	0.840	0.840
Y	DRY GAS METER CALIBRATION FACTOR	0.994	1.002
Pbar	BAROMETRIC PRESSURE, INCHES HG	29.50	29.50
Delta H	AVG. PRESSURE DIFFERENTIAL OF ORIFICE METER, INCHES H2O	2.150	2.090
Vm	VOLUME OF METERED GAS SAMPLE, DRY ACF	47.884	53.819
tm	DRY GAS METER TEMPERATURE, DEGREES F	90	89
Vm(std)	VOLUME OF METERED GAS SAMPLE, DRY SCF*	45.275	51.382
Vlc	TOTAL VOLUME OF LIQUID COLLECTED IN IMPINGERS & SILICA GEL, ML	8.5	3.0
Vw(std)	VOLUME OF WATER VAPOR, SCF*	0.400	0.141
%H2O	MOISTURE CONTENT, PERCENT BY VOLUME	0.9	0.3
Mfd	DRY MOLE FRACTION	0.991	0.997
Md	ESTIMATED DRY MOLECULAR WT, LB/LB-MOLE	28.84	28.84
Ms	WET MOLECULAR WEIGHT, LB/LB-MOLE	28.74	28.81
Pg	FLUE GAS STATIC PRESSURE, INCHES H2O	-0.73	-0.56
Ps	ABSOLUTE FLUE GAS PRESS., INCHES HG	29.45	29.46
ts	FLUE GAS TEMPERATURE, DEGREES F	72	72
Delta p	AVERAGE VELOCITY HEAD, INCHES H2O	0.1950	0.2120
vs	FLUE GAS VELOCITY, FEET/SECOND	25.14	26.18
A	STACK/DUCT AREA, SQUARE INCHES	103.9	103.9
Qsd	VOLUMETRIC AIR FLOW RATE, DRY SCFM*	1,053	1,104
Qaw	VOLUMETRIC AIR FLOW RATE, WET ACFM	1,088	1,133
%I	ISOKINETIC SAMPLING RATE, PERCENT	96.6	105.3

* 68 Degrees F -- 29.92 Inches of Mercury (Hg)

(continued next page)

		TE-11A	TE-11B	
	HEXAVALENT CHROMIUM:			
mg	CATCH, MILLIGRAMS	(5,320.0)	(5,474.0)	
gr/DSCF	CONCENTRATION, GRAINS PER DSCF*	(1.813)	(1.644)	
Lb/Hr	EMISSION RATE, LBS/HOUR	(16.37)	(15.56)	
	TOTAL CHROMIUM:			
mg	TOTAL CATCH, MILLIGRAMS	(5,210.0)	(5,508.0)	
gr/DSCF	CONCENTRATION, GRAINS PER DSCF*	(1.776)	(1.654)	
Lb/Hr	EMISSION RATE, LBS/HOUR	(16.04)	(15.66)	
	FLUE GAS TEMPERATURE:			
	Degrees Fahrenheit	72	72	deg. F
	Degrees Centigrade	22	22	deg. C
	AIR FLOW RATES x million:			
	Actual Cubic Meters/hr	0.0018	0.0019	acmh
	Actual Cubic Feet/hr	0.0653	0.0680	acfh
	Dry Std. Cubic Meters/hr*	0.0018	0.0019	dscmh
	Dry Std. Cubic Feet/hr*	0.0632	0.0662	dscfh
	HEXAVALENT CHROMIUM:			
	Concentration, mg/dscm*	(4149.7243)	(3762.3581)	mg/dscm
	Concentration, gr/dscf*	(1.813374)	(1.644100)	gr/dscf
	Emissions, kg/hr	(7.4269)	(7.0572)	kg/hr
	Emissions, lb/hr	(16.3736)	(15.5584)	lb/hr
	TOTAL CHROMIUM:			
	Concentration, mg/dscm*	(4063.9217)	(3785.7267)	mg/dscm
	Concentration, gr/dscf*	(1.775880)	(1.654312)	gr/dscf
	Emissions, kg/hr	(7.2734)	(7.1010)	kg/hr
	Emissions, lb/hr	(16.0350)	(15.6550)	lb/hr

* 68 Degrees F -- 29.92 Inches of Mercury (Hg)

( ) = x 10^{-3}

PLANT	GREENSBORO IND. PLATERS	DATE: 03/25/96	OPERATOR: DR
SAMPLING LOCATION	COATING TANK #5 EXHAUST	RUN NUMBER	TE-12A
FILTER NUMBER(S)		NOZZLE #, NOZZLE DIAM.	507, .304
BAR. PRESS., in. Hg	29.5	METER BOX ΔH@	1.82
STATIC PRESS., in. H20	-0.73	SAMPLE BOX NUMBER	24
LEAK RATE, CFM	0.004	METER BOX NUMBER	N-5
LEAK TEST VACUUM, in Hg	10	ASSUMED MOISTURE	2

Trav. Point. No.	Sample Time (Min.)	Gas Meter Reading (Cu.Ft.)	Velocity Head (in.H20)	Orifice (in. H20) Desired	ΔH Actual	Gas Meter Temp. (deg. F)	Pump Vac. (in.Hg)	Filter Box Temp. (deg.F)	Imp. Exit Temp. (deg.F)	Stack Temp. (deg.F)	Leak Check
B-5	0/0	589.063	0.213	2.06	2.06	89	9	NA	66	72	
	10	596.93	0.207	2.00	2.00	92	9	NA	60	72	
	20	604.73	0.210	2.03	2.03	94	9	NA	56	72	
A-4	30/0	612.62	0.180	1.74	1.74	92	8	NA	67	72	
	10	619.86	0.180	1.74	1.74	93	8	NA	58	73	
	20	627.13	0.182	1.76	1.76	94	8	NA	55	73	
	60/OFF	634.438									
FINAL DIFF/AVG.		45.375	0.195		1.888	92.33				72.333	

PLANT	GREENSBORO IND. PLATERS	DATE: 03/25/86	OPERATOR: DR
SAMPLING LOCATION	COATING TANK #5 EXHAUST	RUN NUMBER	TE-12B
FILTER NUMBER(S)		NOZZLE #, NOZZLE DIAM.	108, .301
BAR. PRESS., in. Hg	29.5	METER BOX ΔH@	1.60
STATIC PRESS., in. H20	-0.75	SAMPLE BOX NUMBER	5
LEAK RATE, CFM	0.008	METER BOX NUMBER	N-9
LEAK TEST VACUUM, in Hg	5	ASSUMED MOISTURE	2

Trav. Point. No.	Sample Time (Min.)	Gas Meter Reading (Cu.Ft.)	Velocity Head (in.H20)	Orifice ΔH (in. H20) Desired	Orifice ΔH (in. H20) Actual	Gas Meter Temp. (deg. F)	Pump Vac. (in.Hg)	Filter Box Temp. (deg.F)	Imp. Exit Temp. (deg.F)	Stack Temp. (deg.F)	Leak Check
A-4	0/0	527.888	0.175	1.46	1.46	89	5	NA	66	72	
	10	535.26	0.178	1.49	1.49	91	5	NA	60	72	
	20	542.76	0.178	1.49	1.49	92	5	NA	57	72	
B-5	30/0	550.31	0.205	1.71	1.71	91	5	NA	66	72	
	10	558.30	0.200	1.67	1.67	93	5	NA	60	73	
	20	566.32	0.205	1.71	1.71	93	5	NA	56	73	
	60/OFF	574.477									
FINAL DIFF/AVG.		46.589	0.190		1.588	91.5				72.333	

PARTICULATE FIELD DATA & RESULTS TABULATION

PLANT: Greensboro Industrial Platers, Greensboro, North Carolina

RUN #	DATE	SAMPLING LOCATION	TEST TEAM LEADER
TE-12A	03/25/86	Coating Tank #5 Exhaust	B. Dwain Ritchie
TE-12B	03/25/86	Coating Tank #5 Exhaust	B. Dwain Ritchie

		TE-12A	TE-12B
	RUN START TIME	1511	1512
	RUN FINISH TIME	1616	1617
	NET SAMPLING POINTS	2	2
Theta	NET RUN TIME, MINUTES	60.00	60.00
Dia	NOZZLE DIAMETER, INCHES	0.304	0.301
Cp	PITOT TUBE COEFFICIENT	0.840	0.840
Y	DRY GAS METER CALIBRATION FACTOR	0.994	0.998
Pbar	BAROMETRIC PRESSURE, INCHES HG	29.50	29.50
Delta H	AVG. PRESSURE DIFFERENTIAL OF ORIFICE METER, INCHES H2O	1.890	1.590
Vm	VOLUME OF METERED GAS SAMPLE, DRY ACF	45.375	46.589
tm	DRY GAS METER TEMPERATURE, DEGREES F	92	92
Vm(std)	VOLUME OF METERED GAS SAMPLE, DRY SCF*	42.720	44.006
Vlc	TOTAL VOLUME OF LIQUID COLLECTED IN IMPINGERS & SILICA GEL, ML	9.0	10.5
Vw(std)	VOLUME OF WATER VAPOR, SCF*	0.424	0.494
%H2O	MOISTURE CONTENT, PERCENT BY VOLUME	1.0	1.1
Mfd	DRY MOLE FRACTION	0.990	0.989
Md	ESTIMATED DRY MOLECULAR WT, LB/LB-MOLE	28.84	28.84
Ms	WET MOLECULAR WEIGHT, LB/LB-MOLE	28.73	28.72
Pg	FLUE GAS STATIC PRESSURE, INCHES H2O	-0.73	-0.75
Ps	ABSOLUTE FLUE GAS PRESS., INCHES HG	29.45	29.44
ts	FLUE GAS TEMPERATURE, DEGREES F	72	72
Delta p	AVERAGE VELOCITY HEAD, INCHES H2O	0.1950	0.1900
vs	FLUE GAS VELOCITY, FEET/SECOND	25.15	24.83
A	STACK/DUCT AREA, SQUARE INCHES	103.9	103.9
Qsd	VOLUMETRIC AIR FLOW RATE, DRY SCFM*	1,053	1,038
Qaw	VOLUMETRIC AIR FLOW RATE, WET ACFM	1,089	1,075
%I	ISOKINETIC SAMPLING RATE, PERCENT	96.7	103.1

* 68 Degrees F -- 29.92 Inches of Mercury (Hg)

(continued next page)

		TE-12A	TE-12B	
	HEXAVALENT CHROMIUM:			
mg	CATCH, MILLIGRAMS	(5,170.0)	(5,145.0)	
gr/DSCF	CONCENTRATION, GRAINS PER DSCF*	(1.868)	(1.804)	
Lb/Hr	EMISSION RATE, LBS/HOUR	(16.85)	(16.05)	
	TOTAL CHROMIUM:			
mg	TOTAL CATCH, MILLIGRAMS	(5,000.0)	(5,063.0)	
gr/DSCF	CONCENTRATION, GRAINS PER DSCF*	(1.806)	(1.776)	
Lb/Hr	EMISSION RATE, LBS/HOUR	(16.30)	(15.79)	
	FLUE GAS TEMPERATURE:			
	Degrees Fahrenheit	72	72	deg. F
	Degrees Centigrade	22	22	deg. C
	AIR FLOW RATES x million:			
	Actual Cubic Meters/hr	0.0018	0.0018	acmh
	Actual Cubic Feet/hr	0.0653	0.0645	acfh
	Dry Std. Cubic Meters/hr*	0.0018	0.0018	dscmh
	Dry Std. Cubic Feet/hr*	0.0632	0.0623	dscfh
	HEXAVALENT CHROMIUM:			
	Concentration, mg/dscm*	(4273.9394)	(4128.9121)	mg/dscm
	Concentration, gr/dscf*	(1.867655)	(1.804280)	gr/dscf
	Emissions, kg/hr	(7.6426)	(7.2801)	kg/hr
	Emissions, lb/hr	(16.8490)	(16.0499)	lb/hr
	TOTAL CHROMIUM:			
	Concentration, mg/dscm*	(4133.4037)	(4063.1063)	mg/dscm
	Concentration, gr/dscf*	(1.806242)	(1.775523)	gr/dscf
	Emissions, kg/hr	(7.3913)	(7.1641)	kg/hr
	Emissions, lb/hr	(16.2950)	(15.7941)	lb/hr

* 68 Degrees F -- 29.92 Inches of Mercury (Hg)

( ) = x 10^{-3}

PLANT	GREENSBORO IND. PLATERS	DATE: 03/26/86	OPERATOR: BDR
SAMPLING LOCATION	COATING TANK #5 EXHAUST	RUN NUMBER	TE-13A
FILTER NUMBER(S)		NOZZLE #, NOZZLE DIAM.	508,.313
BAR. PRESS., in. Hg	29.5	METER BOX ΔH@	1.75
STATIC PRESS., in. H20	-0.70	SAMPLE BOX NUMBER	11
LEAK RATE, CFM	0.010	METER BOX NUMBER	N-7
LEAK TEST VACUUM, in Hg	6	ASSUMED MOISTURE	2

Trav. Point. No.	Sample Time (Min.)	Gas Meter Reading (Cu.Ft.)	Velocity Head (in.H20)	Orifice (in. H20) Desired	ΔH Actual	Gas Meter Temp. (deg. F)	Pump Vac. (in.Hg)	Filter Box Temp. (deg.F)	Imp. Exit Temp. (deg.F)	Stack Temp. (deg.F)	Leak Check
B-5	0/0	959.538	0.193	2.03	2.03	75	6	NA	67	71	
	10	967.67	0.198	2.08	2.08	81	6	NA	58	71	
	20	975.98	0.200	2.10	2.10	85	6	NA	55	71	
A-4	30/0	984.34	0.166	1.74	1.74	86	5	NA	65	72	
	10	991.90	0.163	1.71	1.71	89	5	NA	56	72	
	20	999.47	0.163	1.71	1.71	90	5	NA	55	72	
	60/OFF	1007.060									
FINAL DIFF/AVG.		47.522	0.180		1.895	84.33				71.5	

PLANT	GREENSBORO IND. PLATERS	DATE: 03/26/96	OPERATOR: BDR
SAMPLING LOCATION	COATING TANK #5 EXHAUST	RUN NUMBER	TE-13B
FILTER NUMBER(S)		NOZZLE #, NOZZLE DIAM.	509,.312
BAR. PRESS., in. Hg	29.5	METER BOX ΔH@	1.61
STATIC PRESS., in. H20	-0.80	SAMPLE BOX NUMBER	13
LEAK RATE, CFM	0.010	METER BOX NUMBER	N-8
LEAK TEST VACUUM, in Hg	3	ASSUMED MOISTURE	2

Trav. Point. No.	Sample Time (Min.)	Gas Meter Reading (Cu.Ft.)	Velocity Head (in.H20)	Orifice ΔH (in. H20) Desired	Actual	Gas Meter Temp. (deg. F)	Pump Vac. (in.Hg)	Filter Box Temp. (deg.F)	Imp. Exit Temp. (deg.F)	Stack Temp. (deg.F)	Leak Check
A-4	0/0	601.619	0.147	1.42	1.42	83	2	NA	66	71	
	10	608.46	0.148	1.43	1.43	87	3	NA	57	71	
	20	615.34	0.148	1.43	1.43	90	3	NA	54	71	
B-5	30/0	622.30	0.211	2.04	2.04	90	3	NA	65	72	
	10	630.59	0.218	2.11	2.11	94	3	NA	56	72	
	20	639.02	0.218	2.11	2.11	95	3	NA	56	72	
	60/OFF	647.524									
FINAL DIFF/AVG.		45.905	0.180		1.757	89.83				71.5	

PARTICULATE FIELD DATA & RESULTS TABULATION

PLANT: Greensboro Industrial Platers, Greensboro, North Carolina

RUN #	DATE	SAMPLING LOCATION	TEST TEAM LEADER
TE-13A	03/26/86	Coating Tank #5 Exhaust	B. Dwain Ritchie
TE-13B	03/26/86	Coating Tank #5 Exhaust	B. Dwain Ritchie

		TE-13A	TE-13B
	RUN START TIME	829	830
	RUN FINISH TIME	949	950
	NET SAMPLING POINTS	2	2
Theta	NET RUN TIME, MINUTES	60.00	60.00
Dia	NOZZLE DIAMETER, INCHES	0.313	0.312
Cp	PITOT TUBE COEFFICIENT	0.840	0.840
Y	DRY GAS METER CALIBRATION FACTOR	1.000	1.012
Pbar	BAROMETRIC PRESSURE, INCHES HG	29.50	29.50
Delta H	AVG. PRESSURE DIFFERENTIAL OF ORIFICE METER, INCHES H2O	1.900	1.760
Vm	VOLUME OF METERED GAS SAMPLE, DRY ACF	47.522	45.905
tm	DRY GAS METER TEMPERATURE, DEGREES F	84	90
Vm(std)	VOLUME OF METERED GAS SAMPLE, DRY SCF*	45.674	44.147
Vlc	TOTAL VOLUME OF LIQUID COLLECTED IN IMPINGERS & SILICA GEL, ML	12.5	13.0
Vw(std)	VOLUME OF WATER VAPOR, SCF*	0.588	0.612
%H2O	MOISTURE CONTENT, PERCENT BY VOLUME	1.3	1.4
Mfd	DRY MOLE FRACTION	0.987	0.986
Md	ESTIMATED DRY MOLECULAR WT, LB/LB-MOLE	28.84	28.84
Ms	WET MOLECULAR WEIGHT, LB/LB-MOLE	28.70	28.69
Pg	FLUE GAS STATIC PRESSURE, INCHES H2O	-0.70	-0.80
Ps	ABSOLUTE FLUE GAS PRESS., INCHES HG	29.45	29.44
ts	FLUE GAS TEMPERATURE, DEGREES F	72	72
Delta p	AVERAGE VELOCITY HEAD, INCHES H2O	0.1800	0.1800
vs	FLUE GAS VELOCITY, FEET/SECOND	24.17	24.18
A	STACK/DUCT AREA, SQUARE INCHES	103.9	103.9
Qsd	VOLUMETRIC AIR FLOW RATE, DRY SCFM*	1,009	1,008
Qaw	VOLUMETRIC AIR FLOW RATE, WET ACFM	1,046	1,047
%I	ISOKINETIC SAMPLING RATE, PERCENT	101.8	99.1

* 68 Degrees F -- 29.92 Inches of Mercury (Hg)

(continued next page)

		TE-13A	TE-13B	
	HEXAVALENT CHROMIUM:			
mg	CATCH, MILLIGRAMS	(6,270.0)	(4,503.0)	
gr/DSCF	CONCENTRATION, GRAINS PER DSCF*	(2.119)	(1.574)	
Lb/Hr	EMISSION RATE, LBS/HOUR	(18.32)	(13.60)	
	TOTAL CHROMIUM:			
mg	TOTAL CATCH, MILLIGRAMS	(6,230.0)	(4,403.0)	
gr/DSCF	CONCENTRATION, GRAINS PER DSCF*	(2.105)	(1.539)	
Lb/Hr	EMISSION RATE, LBS/HOUR	(18.20)	(13.30)	
	FLUE GAS TEMPERATURE:			
	Degrees Fahrenheit	72	72	deg. F
	Degrees Centigrade	22	22	deg. C
	AIR FLOW RATES x million:			
	Actual Cubic Meters/hr	0.0018	0.0018	acmh
	Actual Cubic Feet/hr	0.0628	0.0628	acfh
	Dry Std. Cubic Meters/hr*	0.0017	0.0017	dscmh
	Dry Std. Cubic Feet/hr*	0.0605	0.0605	dscfh
	HEXAVALENT CHROMIUM:			
	Concentration, mg/dscm*	(4848.0012)	(3602.1847)	mg/dscm
	Concentration, gr/dscf*	(2.118512)	(1.574107)	gr/dscf
	Emissions, kg/hr	(8.3095)	(6.1685)	kg/hr
	Emissions, lb/hr	(18.3193)	(13.5993)	lb/hr
	TOTAL CHROMIUM:			
	Concentration, mg/dscm*	(4817.0730)	(3522.1895)	mg/dscm
	Concentration, gr/dscf*	(2.104997)	(1.539150)	gr/dscf
	Emissions, kg/hr	(8.2565)	(6.0315)	kg/hr
	Emissions, lb/hr	(18.2024)	(13.2973)	lb/hr

* 68 Degrees F -- 29.92 Inches of Mercury (Hg)

( ) = x 10^{-3}

PLANT	GREENSBORO IND. PLATERS	DATE: 03/26/86	OPERATOR: BDR
SAMPLING LOCATION	COATING TANK #5 EXHAUST	RUN NUMBER	TE-14A
FILTER NUMBER(S)		NOZZLE #, NOZZLE DIAM.	509,.312
BAR. PRESS., in. Hg	29.5	METER BOX ΔH@	1.75
STATIC PRESS., in. H20	-0.73	SAMPLE BOX NUMBER	24
LEAK RATE, CFM	0.000	METER BOX NUMBER	N-7
LEAK TEST VACUUM, in Hg	8	ASSUMED MOISTURE	2

Trav. Point. No.	Sample Time (Min.)	Gas Meter Reading (Cu.Ft.)	Velocity Head (in.H20)	Orifice ΔH (in. H20) Desired	Actual	Gas Meter Temp. (deg. F)	Pump Vac. (in.Hg)	Filter Box Temp. (deg.F)	Imp. Exit Temp. (deg.F)	Stack Temp. (deg.F)	Leak Check
B-5	0/0	7.188	0.213	2.27	2.27	87	8	NA	65	72	
	10	15.80	0.212	2.25	2.25	91	8	NA	59	72	
	20	24.38	0.212	2.25	2.25	93	8	NA	56	71	
A-4	30/0	33.07	0.162	1.72	1.72	91	6	NA	65	72	
	10	40.61	0.160	1.70	1.70	93	6	NA	56	71	
	20	48.20	0.160	1.70	1.70	93	6	NA	57	72	
	60/OFF	55.790									
FINAL											
DIFF/AVG.		48.602	0.186		1.982	91.33				71.667	

PLANT	GREENSBORO IND. PLATERS	DATE: 03/26/86	OPERATOR: BDR
SAMPLING LOCATION	COATING TANK #5 EXHAUST	RUN NUMBER	TE-14B
FILTER NUMBER(S)		NOZZLE #, NOZZLE DIAM.	108,.301
BAR. PRESS., in. Hg	29.5	METER BOX ΔH@	1.61
STATIC PRESS., in. H20	-0.75	SAMPLE BOX NUMBER	5
LEAK RATE, CFM	0.006	METER BOX NUMBER	N-8
LEAK TEST VACUUM, in Hg	6	ASSUMED MOISTURE	2

Trav. Point. No.	Sample Time (Min.)	Gas Meter Reading (Cu.Ft.)	Velocity Head (in.H20)	Orifice ΔH (in. H20) Desired	Orifice ΔH (in. H20) Actual	Gas Meter Temp. (deg. F)	Pump Vac. (in.Hg)	Filter Box Temp. (deg.F)	Imp. Exit Temp. (deg.F)	Stack Temp. (deg.F)	Leak Check
A-4	0/0	647.639	0.163	1.39	1.39	89	5	NA	65	72	
	10	654.42	0.163	1.39	1.39	92	5	NA	60	72	
	20	661.24	0.160	1.37	1.37	94	5	NA	55	71	
	30/0	668.04	0.197	1.69	1.69	91	6	NA	64	72	
	10	675.57	0.201	1.72	1.72	93	6	NA	57	71	
	20	683.23	0.200	1.71	1.71	94	6	NA	56	72	
	60/OFF	690.825									
FINAL DIFF/AVG.		43.186	0.180		1.545	92.17				71.667	

PARTICULATE FIELD DATA & RESULTS TABULATION

PLANT: Greensboro Industrial Platers, Greensboro, North Carolina

RUN #	DATE	SAMPLING LOCATION	TEST TEAM LEADER
TE-14A	03/26/86	Coating Tank #5 Exhaust	B. Dwain Ritchie
TE-14B	03/26/86	Coating Tank #5 Exhaust	B. Dwain Ritchie

		TE-14A	TE-14B
	RUN START TIME	1022	1023
	RUN FINISH TIME	1127	1128
	NET SAMPLING POINTS	2	1
Theta	NET RUN TIME, MINUTES	60.00	60.00
Dia	NOZZLE DIAMETER, INCHES	0.312	0.301
Cp	PITOT TUBE COEFFICIENT	0.840	0.840
Y	DRY GAS METER CALIBRATION FACTOR	1.000	1.012
Pbar	BAROMETRIC PRESSURE, INCHES HG	29.50	29.50
Delta H	AVG. PRESSURE DIFFERENTIAL OF ORIFICE METER, INCHES H2O	1.980	1.550
Vm	VOLUME OF METERED GAS SAMPLE, DRY ACF	48.602	43.186
tm	DRY GAS METER TEMPERATURE, DEGREES F	91	92
Vm(std)	VOLUME OF METERED GAS SAMPLE, DRY SCF*	46.128	41.360
Vlc	TOTAL VOLUME OF LIQUID COLLECTED IN IMPINGERS & SILICA GEL, ML	12.0	10.0
Vw(std)	VOLUME OF WATER VAPOR, SCF*	0.565	0.471
%H2O	MOISTURE CONTENT, PERCENT BY VOLUME	1.2	1.1
Mfd	DRY MOLE FRACTION	0.988	0.989
Md	ESTIMATED DRY MOLECULAR WT, LB/LB-MOLE	28.84	28.84
Ms	WET MOLECULAR WEIGHT, LB/LB-MOLE	28.70	28.71
Pg	FLUE GAS STATIC PRESSURE, INCHES H2O	-0.73	-0.75
Ps	ABSOLUTE FLUE GAS PRESS., INCHES HG	29.45	29.44
ts	FLUE GAS TEMPERATURE, DEGREES F	72	72
Delta p	AVERAGE VELOCITY HEAD, INCHES H2O	0.1860	0.1800
vs	FLUE GAS VELOCITY, FEET/SECOND	24.57	24.17
A	STACK/DUCT AREA, SQUARE INCHES	103.9	103.9
Qsd	VOLUMETRIC AIR FLOW RATE, DRY SCFM*	1,026	1,010
Qaw	VOLUMETRIC AIR FLOW RATE, WET ACFM	1,064	1,046
%I	ISOKINETIC SAMPLING RATE, PERCENT	101.7	99.5

* 68 Degrees F -- 29.92 Inches of Mercury (Hg)

(continued next page)

		TE-14A	TE-14B	
	HEXAVALENT CHROMIUM:			
mg	CATCH, MILLIGRAMS	(4.890.0)	(3,881.0)	
gr/DSCF	CONCENTRATION, GRAINS PER DSCF*	(1.636)	(1.448)	
Lb/Hr	EMISSION RATE, LBS/HOUR	(14.39)	(12.54)	
	TOTAL CHROMIUM:			
mg	TOTAL CATCH, MILLIGRAMS	(4,710.0)	(3,653.0)	
gr/DSCF	CONCENTRATION, GRAINS PER DSCF*	(1.576)	(1.363)	
Lb/Hr	EMISSION RATE, LBS/HOUR	(13.86)	(11.80)	
	FLUE GAS TEMPERATURE:			
	Degrees Fahrenheit	72	72	deg. F
	Degrees Centigrade	22	22	deg. C
	AIR FLOW RATES x million:			
	Actual Cubic Meters/hr	0.0018	0.0018	acmh
	Actual Cubic Feet/hr	0.0638	0.0628	acfh
	Dry Std. Cubic Meters/hr*	0.0017	0.0017	dscmh
	Dry Std. Cubic Feet/hr*	0.0616	0.0606	dscfh
	HEXAVALENT CHROMIUM:			
	Concentration, mg/dscm*	(3743.7869)	(3313.8089)	mg/dscm
	Concentration, gr/dscf*	(1.635985)	(1.448090)	gr/dscf
	Emissions, kg/hr	(6.5260)	(5.6864)	kg/hr
	Emissions, lb/hr	(14.3874)	(12.5363)	lb/hr
	TOTAL CHROMIUM:			
	Concentration, mg/dscm*	(3605.9788)	(3119.1301)	mg/dscm
	Concentration, gr/dscf*	(1.575765)	(1.363018)	gr/dscf
	Emissions, kg/hr	(6.2858)	(5.3523)	kg/hr
	Emissions, lb/hr	(13.8578)	(11.7999)	lb/hr

* 68 Degrees F -- 29.92 Inches of Mercury (Hg)

( ) = x 10^{-3}

PLANT	GREENSBORO IND. PLATERS	DATE: 03/18/86	OPERATOR: WSN
SAMPLING LOCATION	MIST ELIM. INLET	RUN NUMBER	MI-1
FILTER NUMBER(S)		NOZZLE #, NOZZLE DIAM.	106,.250
BAR. PRESS., in. Hg	29.2	METER BOX ΔH@	1.75
STATIC PRESS., in. H2O	-1.35	SAMPLE BOX NUMBER	4
LEAK RATE, CFM	0.009	METER BOX NUMBER	N-7
LEAK TEST VACUUM, in Hg	8	ASSUMED MOISTURE	2

Trav. Point. No.	Sample Time (Min.)	Gas Meter Reading (Cu.Ft.)	Velocity Head (in.H2O)	Orifice ΔH (in. H2O) Desired	Orifice ΔH (in. H2O) Actual	Gas Meter Temp. (deg. F)	Pump Vac. (in.Hg)	Filter Box Temp. (deg.F)	Imp. Exit Temp. (deg.F)	Stack Temp. (deg.F)	Leak Check
A-1	0/0	268.153	0.56	2.32	2.32	69	6	200	57	62	
A-2	5	272.47	0.55	2.30	2.30	70	6	200	57	62	
A-3	10	276.76	0.54	2.28	2.28	74	6	200	57	63	
A-4	15	281.19	0.58	2.42	2.42	74	7	200	57	64	
A-5	20	285.48	0.64	2.70	2.70	76	7	200	58	64	
A-6	25	290.13	0.64	2.70	2.70	77	7	200	59	64	
A-7	30	294.78	0.64	2.70	2.70	75	7	200	59	63	
A-8	35	299.38	0.66	2.78	2.78	76	7	200	59	64	
A-9	40	304.23	0.70	2.92	2.92	76	8	200	60	62	
A-10	45	309.11	0.72	2.98	2.98	78	8	200	60	63	
A-11	50	314.02	0.72	2.98	2.98	73	8	200	60	64	
A-12	55	318.96	0.70	2.92	2.92	77	8	200	60	64	323.603
B-1	60/0	323.658	0.58	2.42	2.42	75	7	200	60	66	323.658
	5	328.66	0.58	2.42	2.42	78	7	200	60	67	
	10	332.61	0.60	2.50	2.50	79	7	200	60	66	
	15	337.18	0.60	2.50	2.50	80	7	200	62	67	
B-2	20	341.58	0.62	2.58	2.58	77	7	200	62	66	
B-3	25	346.10	0.62	2.58	2.58	78	7	200	62	66	
B-4	30	351.29	0.56	2.32	2.32	78	7	200	62	66	
B-5	35	355.04	0.50	2.10	2.10	81	6	200	62	66	
B-6	40	359.29	0.54	2.28	2.28	78	7	200	63	66	
	45	363.49	0.54	2.28	2.28	80	7	200	63	67	
	50	367.88	0.54	2.28	2.28	83	7	200	63	66	
	55	372.24	0.56	2.32	2.32	84	7	200	63	66	
	120/OFF	376.597									
FINAL DIFF/AVG.		108.389	0.602		2.52	76.92				64.75	0.055

PLANT	GREENSBORO IND. PLATERS	DATE: 03/18/86	OPERATOR: ST
SAMPLING LOCATION	MIST ELIM. OUTLET	RUN NUMBER	MO-1
FILTER NUMBER(S)		NOZZLE #, NOZZLE DIAM.	702,.179
BAR. PRESS., in. Hg	29.2	METER BOX ΔH@	1.76
STATIC PRESS., in. H20	-1.33	SAMPLE BOX NUMBER	18
LEAK RATE, CFM	0.000	METER BOX NUMBER	N-14
LEAK TEST VACUUM, in Hg	20	ASSUMED MOISTURE	2

Trav. Point. No.	Sample Time (Min.)	Gas Meter Reading (Cu.Ft.)	Velocity Head (in.H20)	Orifice ΔH (in. H20) Desired	Orifice ΔH (in. H20) Actual	Gas Meter Temp. (deg. F)	Pump Vac. (in.Hg)	Filter Box Temp. (deg.F)	Imp. Exit Temp. (deg.F)	Stack Temp. (deg.F)	Leak Check
A-1	0/0	509.389	3.10	3.19	3.19	52	14	130	50	70	
	4	514.101	3.10	3.19	3.19	52	13	130	50	70	
A-2	8/0	517.403	3.39	3.48	3.48	60	14	130	50	70	
	12	521.808	3.39	3.48	3.48	62	14	130	48	69	
A-3	16/0	526.004	3.30	3.39	3.39	64	14	130	48	69	
	20	531.901	3.30	3.39	3.39	64	14	130	48	69	
A-4	24/0	533.802	3.60	3.70	3.70	62	14	130	48	69	
	28	537.505	3.60	3.70	3.70	62	14	130	48	69	
A-5	32/0	542.401	3.60	3.70	3.70	64	14	130	48	69	
	36	546.802	4.20	4.31	4.31	64	14	130	50	70	
A-6	40/0	550.773	4.30	4.42	4.42	60	13	130	50	70	
	44	558.202	4.30	4.42	4.42	60	13	130	55	70	550.773
A-7	48/0	563.203	4.41	4.53	4.53	63	13	130	55	70	554.003
	52	568.010	4.50	4.62	4.62	63	13	130	55	70	
A-8	56/0	572.710	4.40	4.52	4.52	63	13	130	55	70	
	60	578.105	4.40	4.52	4.52	65	13	135	58	72	
B-1	64/0	582.510	3.00	3.08	3.08	64	11	135	58	72	
	4	586.710	3.00	3.08	3.08	64	11	135	58	72	
B-2	8/0	590.806	3.60	3.70	3.70	69	14	135	58	70	
	12	595.401	3.60	3.70	3.70	69	14	135	58	70	
B-3	16/0	599.404	4.20	4.32	4.32	69	14	135	58	71	
	20	604.205	4.20	4.32	4.32	69	14	135	58	72	
B-4	24/0	609.103	4.30	4.42	4.42	73	14	135	58	72	
	28	613.507	4.30	4.42	4.42	77	14	135	58	72	
B-5	32/0	618.310	4.00	4.11	4.11	78	14	135	58	73	
	36	623.902	4.00	4.11	4.11	80	15	135	59	73	
B-6	40/0	628.006	4.10	4.21	4.21	80	15	135	60	72	
	44	633.107	4.10	4.21	4.21	80	15	135	60	73	
B-7	48/0	637.908	4.30	4.42	4.42	80	15	135	60	72	
	52	642.605	4.30	4.42	4.42	81	15	135	60	72	
B-8	56/0	652.401	4.39	4.51	4.51	81	15	135	60	72	
	60	652.410	4.39	4.51	4.51	81	15	135	60	72	
	128/OFF	657.238									
FINAL DIFF/AVG.		144.619	3.864		4.003	67.97				70.906	3.23

PARTICULATE FIELD DATA & RESULTS TABULATION

PLANT: Greensboro Industrial Platers, Greensboro, North Carolina

RUN #	DATE	SAMPLING LOCATION	TEST TEAM LEADER
MI-1	03/18/86	Mist Eliminator Inlet	Willis S. Nesbit
MO-1	03/18/86	Mist Eliminator Outlet	Steve Terll

		MI-1	MO-1
	RUN START TIME	838	836
	RUN FINISH TIME	1207	1150
	NET SAMPLING POINTS	18	16
Theta	NET RUN TIME, MINUTES	120.00	128.00
Dia	NOZZLE DIAMETER, INCHES	0.250	0.179
Cp	PITOT TUBE COEFFICIENT	0.840	0.840
Y	DRY GAS METER CALIBRATION FACTOR	1.000	0.993
Pbar	BAROMETRIC PRESSURE, INCHES HG	29.20	29.20
Delta H	AVG. PRESSURE DIFFERENTIAL OF ORIFICE METER, INCHES H2O	2.520	4.003
Vm	VOLUME OF METERED GAS SAMPLE, DRY ACF	108.389	144.619
tm	DRY GAS METER TEMPERATURE, DEGREES F	77	68
Vm(std)	VOLUME OF METERED GAS SAMPLE, DRY SCF*	104.626	141.507
Vlc	TOTAL VOLUME OF LIQUID COLLECTED IN IMPINGERS & SILICA GEL, ML	22.0	33.0
Vw(std)	VOLUME OF WATER VAPOR, SCF*	1.036	1.553
%H2O	MOISTURE CONTENT, PERCENT BY VOLUME	1.0	1.1
Mfd	DRY MOLE FRACTION	0.990	0.989
Md	ESTIMATED DRY MOLECULAR WT, LB/LB-MOLE	28.84	28.84
Ms	WET MOLECULAR WEIGHT, LB/LB-MOLE	28.73	28.72
Pg	FLUE GAS STATIC PRESSURE, INCHES H2O	-1.35	-1.33
Ps	ABSOLUTE FLUE GAS PRESS., INCHES HG	29.10	29.10
ts	FLUE GAS TEMPERATURE, DEGREES F	65	71
Delta p	AVERAGE VELOCITY HEAD, INCHES H2O	0.6020	3.8640
vs	FLUE GAS VELOCITY, FEET/SECOND	44.15	112.5
A	STACK/DUCT AREA, SQUARE INCHES	443.0	143.0
Qsd	VOLUMETRIC AIR FLOW RATE, DRY SCFM*	7,891	6,411
Qaw	VOLUMETRIC AIR FLOW RATE, WET ACFM	8,150	6,704
%I	ISOKINETIC SAMPLING RATE, PERCENT	99.6	97.9

* 68 Degrees F -- 29.92 Inches of Mercury (Hg)

(continued next page)

		MI-1	MO-1	
	HEXAVALENT CHROMIUM:			
mg	CATCH, MILLIGRAMS	(4,494.0)	(675.0)	
gr/DSCF	CONCENTRATION, GRAINS PER DSCF*	(0.6629)	(0.07361)	
Lb/Hr	EMISSION RATE, LBS/HOUR	(44.83)	(4.045)	
	TOTAL CHROMIUM:			
mg	TOTAL CATCH, MILLIGRAMS	(5,090.0)	(886.0)	
gr/DSCF	CONCENTRATION, GRAINS PER DSCF*	(0.7508)	(0.09662)	
Lb/Hr	EMISSION RATE, LBS/HOUR	(50.78)	(5.310)	
	FLUE GAS TEMPERATURE:			
	Degrees Fahrenheit	65	71	deg. F
	Degrees Centigrade	18	22	deg. C
	AIR FLOW RATES x million:			
	Actual Cubic Meters/hr	0.0138	0.0114	acmh
	Actual Cubic Feet/hr	0.4890	0.4022	acfh
	Dry Std. Cubic Meters/hr*	0.0134	0.0109	dscmh
	Dry Std. Cubic Feet/hr*	0.4734	0.3847	dscfh
	HEXAVALENT CHROMIUM:			
	Concentration, mg/dscm*	(1516.9001)	(168.4571)	mg/dscm
	Concentration, gr/dscf*	(0.662865)	(0.073614)	gr/dscf
	Emissions, kg/hr	(20.3356)	(1.8349)	kg/hr
	Emissions, lb/hr	(44.8324)	(4.0452)	lb/hr
	TOTAL CHROMIUM:			
	Concentration, mg/dscm*	(1718.0733)	(221.1155)	mg/dscm
	Concentration, gr/dscf*	(0.750775)	(0.096625)	gr/dscf
	Emissions, kg/hr	(23.0326)	(2.4085)	kg/hr
	Emissions, lb/hr	(50.7781)	(5.3097)	lb/hr

* 68 Degrees F -- 29.92 Inches of Mercury (Hg)

( ) = x 10^{-3}

PLANT	GREENSBORO IND. PLATERS	DATE: 03/18/86	OPERATOR: WSN
SAMPLING LOCATION	MIST ELIM. INLET	RUN NUMBER	MI-2
FILTER NUMBER(S)		NOZZLE #, NOZZLE DIAM.	104,.257
BAR. PRESS., in. Hg	29.2	METER BOX ΔH@	1.75
STATIC PRESS., in. H20	-1.30	SAMPLE BOX NUMBER	16
LEAK RATE, CFM	0.000	METER BOX NUMBER	N-7
LEAK TEST VACUUM, in Hg	8	ASSUMED MOISTURE	2

Trav. Point. No.	Sample Time (Min.)	Gas Meter Reading (Cu.Ft.)	Velocity Head (in.H20)	Orifice ΔH (in. H20) Desired	Orifice ΔH (in. H20) Actual	Gas Meter Temp. (deg. F)	Pump Vac. (in.Hg)	Filter Box Temp. (deg.F)	Imp. Exit Temp. (deg.F)	Stack Temp. (deg.F)	Leak Check
A-1	0/0	376.958	0.45	2.09	2.09	71	6	200	62	66	
A-2	5	381.30	0.52	2.38	2.38	72	7	200	62	68	
A-3	10	385.53	0.54	2.50	2.50	74	7	200	62	68	
A-4	15	389.97	0.54	2.50	2.50	76	7	200	62	69	
A-5	20	394.45	0.60	2.78	2.78	78	7	200	62	69	
A-6	25	399.29	0.62	2.85	2.85	80	7	200	62	67	
A-7	30	404.14	0.54	2.50	2.50	82	8	200	62	69	
A-8	35	408.66	0.58	2.70	2.70	83	8	200	62	69	
A-9	40	413.32	0.63	2.90	2.90	83	8	200	62	69	
A-10	45	418.29	0.65	2.98	2.98	85	8	200	62	70	
A-11	50	423.10	0.62	2.85	2.85	86	8	200	62	69	
A-12	55	427.96	0.62	2.85	2.85	86	8	200	62	70	
B-1	60/0	432.80	0.52	2.38	2.38	82	7	200	62	71	
	5	437.28	0.52	2.38	2.38	84	7	200	63	70	
	10	441.80	0.55	2.57	2.57	86	7	200	63	70	
	15	446.42	0.54	2.52	2.52	86	7	200	63	70	
B-2	20	450.74	0.52	2.42	2.42	84	7	200	63	70	
B-3	25	455.28	0.58	2.70	2.70	81	7	200	63	71	
B-4	30	460.15	0.56	2.62	2.62	83	7	200	63	71	
B-5	35	464.83	0.54	2.52	2.52	86	7	200	63	71	
B-6	40	469.36	0.50	2.35	2.35	84	7	200	63	72	
	45	473.88	0.52	2.42	2.42	87	7	200	63	72	
	50	478.27	0.52	2.42	2.42	88	7	200	63	71	
	55	482.70	0.52	2.42	2.42	88	7	200	63	71	
	120/OFF	487.183									
FINAL											
DIFF/AVG.											
		110.225	0.553		2.57	82.29				69.708	

PLANT	GREENSBORO IND. PLATERS	DATE: 03/18/86	OPERATOR: ST
SAMPLING LOCATION	MIST ELIM. OUTLET	RUN NUMBER	MO-2
FILTER NUMBER(S)		NOZZLE #, NOZZLE DIAM.	502,.155
BAR. PRESS., in. Hg	29.2	METER BOX ΔH@	1.76
STATIC PRESS., in. H20	-1.48	SAMPLE BOX NUMBER	1
LEAK RATE, CFM	0.000	METER BOX NUMBER	N-14
LEAK TEST VACUUM, in Hg	10	ASSUMED MOISTURE	2

Trav. Point. No.	Sample Time (Min.)	Gas Meter Reading (Cu.Ft.)	Velocity Head (in.H20)	Orifice ΔH (in. H20) Desired	Orifice ΔH (in. H20) Actual	Gas Meter Temp. (deg. F)	Pump Vac. (in.Hg)	Filter Box Temp. (deg.F)	Imp. Exit Temp. (deg.F)	Stack Temp. (deg.F)	Leak Check
B-1	0/0	657.707	3.30	1.99	1.99	72	7	140	55	65	
	4	660.905	3.30	1.99	1.99	72	7	140	55	66	
B-2	8/0	664.108	3.80	2.29	2.29	72	8	140	55	66	
	12	668.006	3.80	2.29	2.29	72	8	140	55	70	
B-3	16/0	671.005	4.30	2.59	2.59	72	8	140	58	72	
	20	674.710	4.30	2.59	2.59	74	8	140	59	72	
B-4	24/0	678.307	4.60	2.77	2.77	77	8	140	59	72	
	28	682.103	4.50	2.71	2.71	78	8	140	59	72	
B-5	32/0	685.902	4.30	2.59	2.59	80	8	140	59	74	
	36	689.606	4.20	2.53	2.53	80	8	140	59	74	
B-6	40/0	693.303	4.39	2.65	2.65	80	8	140	59	73	
	44	697.007	4.39	2.65	2.65	80	8	135	60	73	
B-7	48/0	700.803	4.40	2.65	2.65	80	8	135	60	73	
	52	704.502	4.40	2.65	2.65	80	8	135	60	74	
B-8	56/0	708.303	4.20	2.53	2.53	80	9	135	60	75	
	60	711.901	4.30	2.59	2.59	80	9	135	60	75	
A-1	64/0	715.555	2.99	1.80	1.80	80	7	135	60	70	
	4	718.704	2.99	1.80	1.80	80	7	135	60	74	
A-2	8/0	721.806	3.20	1.93	1.93	80	7	135	60	74	
	12	725.110	3.20	1.93	1.93	80	7	135	60	76	
A-3	16/0	728.201	3.40	2.05	2.05	78	7	135	60	76	
	20	731.502	3.40	2.05	2.05	78	7	135	60	76	
A-4	24/0	734.801	3.70	2.23	2.23	78	7	135	60	77	
	28	738.201	3.70	2.23	2.23	78	7	135	60	76	
A-5	32/0	741.903	4.40	2.65	2.65	77	7	135	60	76	
	36	745.606	4.40	2.65	2.65	77	7	135	60	76	
A-6	40/0	748.602	4.60	2.77	2.77	77	7	135	60	76	
	44	752.208	4.70	2.83	2.83	77	7	135	60	76	
A-7	48/0	756.105	4.70	2.83	2.83	77	7	135	60	77	
	52	760.202	4.70	2.83	2.83	77	7	135	60	77	
A-8	56/0	763.905	4.30	2.59	2.59	77	7	135	60	77	
	60	767.703	4.39	4.65	4.65	77	7	135	60	77	
	128/OFF	771.268									
FINAL DIFF/AVG.		113.561	4.008		2.496	77.41				73.656	

PARTICULATE FIELD DATA & RESULTS TABULATION

PLANT: Greensboro Industrial Platers, Greensboro, North Carolina

RUN #	DATE	SAMPLING LOCATION	TEST TEAM LEADER
MI-2	03/18/86	Mist Eliminator Inlet	Willis S. Nesbit
MO-2	03/18/86	Mist Eliminator Outlet	Steve Terll

		MI-2	MO-2
	RUN START TIME	1310	1310
	RUN FINISH TIME	1532	1530
	NET SAMPLING POINTS	18	16
Theta	NET RUN TIME, MINUTES	120.00	128.00
Dia	NOZZLE DIAMETER, INCHES	0.257	0.155
Cp	PITOT TUBE COEFFICIENT	0.840	0.840
Y	DRY GAS METER CALIBRATION FACTOR	1.000	0.993
Pbar	BAROMETRIC PRESSURE, INCHES HG	29.20	29.20
Delta H	AVG. PRESSURE DIFFERENTIAL OF ORIFICE METER, INCHES H2O	2.570	2.496
Vm	VOLUME OF METERED GAS SAMPLE, DRY ACF	110.225	113.561
tm	DRY GAS METER TEMPERATURE, DEGREES F	82	77
Vm(std)	VOLUME OF METERED GAS SAMPLE, DRY SCF*	105.430	108.845
Vlc	TOTAL VOLUME OF LIQUID COLLECTED IN IMPINGERS & SILICA GEL, ML	30.0	38.0
Vw(std)	VOLUME OF WATER VAPOR, SCF*	1.412	1.789
%H2O	MOISTURE CONTENT, PERCENT BY VOLUME	1.3	1.6
Mfd	DRY MOLE FRACTION	0.987	0.984
Md	ESTIMATED DRY MOLECULAR WT, LB/LB-MOLE	28.84	28.84
Ms	WET MOLECULAR WEIGHT, LB/LB-MOLE	28.69	28.66
Pg	FLUE GAS STATIC PRESSURE, INCHES H2O	-1.30	-1.48
Ps	ABSOLUTE FLUE GAS PRESS., INCHES HG	29.10	29.09
ts	FLUE GAS TEMPERATURE, DEGREES F	70	74
Delta p	AVERAGE VELOCITY HEAD, INCHES H2O	0.5530	4.0080
vs	FLUE GAS VELOCITY, FEET/SECOND	42.54	115.1
A	STACK/DUCT AREA, SQUARE INCHES	443.0	143.0
Qsd	VOLUMETRIC AIR FLOW RATE, DRY SCFM*	7,506	6,481
Qaw	VOLUMETRIC AIR FLOW RATE, WET ACFM	7,853	6,855
%I	ISOKINETIC SAMPLING RATE, PERCENT	99.8	99.3

* 68 Degrees F -- 29.92 Inches of Mercury (Hg)

(continued next page)

		MI-2	MO-2	
	HEXAVALENT CHROMIUM:			
mg	CATCH, MILLIGRAMS	(7,304.0)	(1,162.0)	
gr/DSCF	CONCENTRATION, GRAINS PER DSCF*	(1.069)	(0.1648)	
Lb/Hr	EMISSION RATE, LBS/HOUR	(68.79)	(9.153)	
	TOTAL CHROMIUM:			
mg	TOTAL CATCH, MILLIGRAMS	(8,148.0)	(1,343.0)	
gr/DSCF	CONCENTRATION, GRAINS PER DSCF*	(1.193)	(0.1904)	
Lb/Hr	EMISSION RATE, LBS/HOUR	(76.74)	(10.58)	
	FLUE GAS TEMPERATURE:			
	Degrees Fahrenheit	70	74	deg. F
	Degrees Centigrade	21	23	deg. C
	AIR FLOW RATES x million:			
	Actual Cubic Meters/hr	0.0133	0.0116	acmh
	Actual Cubic Feet/hr	0.4712	0.4113	acfh
	Dry Std. Cubic Meters/hr*	0.0128	0.0110	dscmh
	Dry Std. Cubic Feet/hr*	0.4504	0.3889	dscfh
	HEXAVALENT CHROMIUM:			
	Concentration, mg/dscm*	(2446.5858)	(377.0187)	mg/dscm
	Concentration, gr/dscf*	(1.069125)	(0.164752)	gr/dscf
	Emissions, kg/hr	(31.2014)	(4.1516)	kg/hr
	Emissions, lb/hr	(68.7873)	(9.1528)	lb/hr
	TOTAL CHROMIUM:			
	Concentration, mg/dscm*	(2729.2964)	(435.7453)	mg/dscm
	Concentration, gr/dscf*	(1.192666)	(0.190415)	gr/dscf
	Emissions, kg/hr	(34.8068)	(4.7983)	kg/hr
	Emissions, lb/hr	(76.7358)	(10.5785)	lb/hr

* 68 Degrees F -- 29.92 Inches of Mercury (Hg)

( ) = x 10^{-3}

PLANT	GREENSBORO IND. PLATERS	DATE: 03/19/86	OPERATOR: WSN
SAMPLING LOCATION	MIST ELIM. INLET	RUN NUMBER	MI-3
FILTER NUMBER(S)		NOZZLE #, NOZZLE DIAM.	106,.250
BAR. PRESS., in. Hg	29.2	METER BOX ΔH@	1.75
STATIC PRESS., in. H20	-1.35	SAMPLE BOX NUMBER	4
LEAK RATE, CFM	0.003	METER BOX NUMBER	N-7
LEAK TEST VACUUM, in Hg	8	ASSUMED MOISTURE	2

Trav. Point. No.	Sample Time (Min.)	Gas Meter Reading (Cu.Ft.)	Velocity Head (in.H20)	Orifice ΔH (in. H20) Desired	Orifice ΔH (in. H20) Actual	Gas Meter Temp. (deg. F)	Pump Vac. (in.Hg)	Filter Box Temp. (deg.F)	Imp. Exit Temp. (deg.F)	Stack Temp. (deg.F)	Leak Check
A-1	0/0	487.748	0.45	1.88	1.88	71	6	200	62	73	
A-2	5	491.77	0.52	2.17	2.17	73	6	200	62	73	
A-3	10	495.98	0.54	2.26	2.26	76	6	200	62	74	
A-4	15	500.30	0.60	2.51	2.51	78	7	200	62	74	
A-5	20	504.83	0.64	2.67	2.67	82	7	200	62	75	
A-6	25	509.38	0.66	2.76	2.76	80	7	200	62	74	
A-7	30	514.53	0.63	2.63	2.63	84	7	200	62	74	
A-8	35	518.74	0.67	2.80	2.80	86	7	200	62	75	
A-9	40	523.54	0.67	2.80	2.80	88	7	200	62	75	
A-10	45	528.44	0.70	2.93	2.93	89	8	200	62	75	
A-11	50	533.35	0.72	3.01	3.01	90	8	200	62	75	
A-12	55	538.48	0.70	2.93	2.93	92	8	200	62	75	
B-1	60/0	543.23	0.55	2.30	2.30	88	7	200	62	74	
	5	547.73	0.55	2.30	2.30	89	7	200	62	74	
	10	552.40	0.55	2.30	2.30	91	7	200	62	75	
	15	556.47	0.57	2.38	2.38	91	7	200	62	74	
B-2	20	560.89	0.62	2.59	2.59	92	7	200	62	75	
B-3	25	565.68	0.60	2.51	2.51	92	7	200	62	75	
B-4	30	570.28	0.64	2.68	2.68	92	7	200	62	75	
B-5	35	574.91	0.56	2.34	2.34	85	7	200	62	74	
B-6	40	579.24	0.47	1.97	1.97	84	6	200	62	74	
	45	583.42	0.45	1.88	1.88	86	6	200	62	74	
	50	587.21	0.44	1.84	1.84	87	6	200	62	74	
	55	591.29	0.44	1.84	1.84	87	6	200	62	75	
	120/OFF	595.235									
FINAL											
DIFF/AVG.											
		107.487	0.578		2.43	85.54				74.375	

PLANT	GREENSBORO IND. PLATERS	DATE: 03/19/86	OPERATOR: ST
SAMPLING LOCATION	MIST ELIM. OUTLET	RUN NUMBER	MO-3
FILTER NUMBER(S)		NOZZLE #, NOZZLE DIAM.	702,.179
BAR. PRESS., in. Hg	29.2	METER BOX ΔH@	1.76
STATIC PRESS., in. H20	-1.70	SAMPLE BOX NUMBER	18
LEAK RATE, CFM	0.001	METER BOX NUMBER	N-14
LEAK TEST VACUUM, in Hg	20	ASSUMED MOISTURE	2

Trav. Point. No.	Sample Time (Min.)	Gas Meter Reading (Cu.Ft.)	Velocity Head (in.H20)	Orifice ΔH (in. H20) Desired	Orifice ΔH (in. H20) Actual	Gas Meter Temp. (deg. F)	Pump Vac. (in.Hg)	Filter Box Temp. (deg.F)	Imp. Exit Temp. (deg.F)	Stack Temp. (deg.F)	Leak Check
B-1	0/0	771.314	3.60	3.70	3.70	60	14	100	53	80	
	4	775.710	3.60	3.70	3.70	60	14	100	54	80	
B-2	8/0	780.010	3.40	3.49	3.49	60	14	100	54	81	
	12	784.102	4.00	4.11	4.11	63	15	100	56	81	
B-3	16/0	788.705	4.20	4.31	4.31	64	15	100	56	82	
	20	793.404	4.20	4.31	4.31	66	15	100	57	80	
B-4	24/0	798.107	4.00	4.11	4.11	66	15	110	57	79	
	28	802.906	4.00	4.11	4.11	66	15	110	58	80	
B-5	32/0	807.803	4.20	4.31	4.31	70	15	110	58	80	
	36	812.605	4.20	4.31	4.31	70	15	110	58	80	
B-6	40/0	817.505	4.30	4.42	4.42	78	15	120	60	80	
	44	822.503	4.30	4.42	4.42	79	15	120	60	80	
B-7	48/0	826.905	4.20	4.31	4.31	79	15	130	60	80	
	52	831.907	4.10	4.21	4.21	82	15	130	60	80	
B-8	56/0	836.810	4.20	4.31	4.31	86	15	130	60	80	
	60	841.710	4.20	4.31	4.31	86	15	130	60	80	
A-1	64/0	846.363	2.60	2.67	2.67	80	13	130	60	69	846.363
	4	850.403	3.00	3.08	3.08	82	13	130	60	69	846.512
A-2	8/0	854.702	3.10	3.19	3.19	86	13	130	60	80	
	12	858.704	3.10	3.19	3.19	86	14	130	62	82	
A-3	16/0	862.805	3.40	3.49	3.49	86	14	130	62	81	
	20	869.107	3.40	3.49	3.49	86	14	130	62	81	
A-4	24/0	871.206	3.60	3.70	3.70	88	14	131	62	81	
	28	875.509	3.60	3.70	3.70	88	14	131	62	81	
A-5	32/0	880.007	4.20	4.31	4.31	84	14	131	62	79	
	36	885.302	4.20	4.31	4.31	83	16	130	60	80	
A-6	40/0	890.304	4.40	4.52	4.52	83	16	130	60	81	
	44	894.602	4.40	4.52	4.52	83	16	130	60	81	
A-7	48/0	899.005	4.40	4.52	4.52	83	16	130	60	81	
	52	903.803	4.40	4.52	4.52	84	16	130	60	80	
A-8	56/0	908.704	4.40	4.52	4.52	84	16	130	60	80	
	60	913.210	4.40	4.52	4.52	84	16	130	60	80	
	128/OFF	918.366									
FINAL DIFF/AVG.		146.903	3.884		4.022	77.66				79.656	0.149

PARTICULATE FIELD DATA & RESULTS TABULATION

PLANT: Greensboro Industrial Platers, Greensboro, North Carolina

RUN #	DATE	SAMPLING LOCATION	TEST TEAM LEADER
MI-3	03/19/86	Mist Eliminator Inlet	Willis S. Nesbit
MO-3	03/19/86	Mist Eliminator Outlet	Steve Terll

		MI-3	MO-3
	RUN START TIME	804	805
	RUN FINISH TIME	1042	1052
	NET SAMPLING POINTS	18	16
Theta	NET RUN TIME, MINUTES	120.00	128.00
Dia	NOZZLE DIAMETER, INCHES	0.250	0.179
Cp	PITOT TUBE COEFFICIENT	0.840	0.840
Y	DRY GAS METER CALIBRATION FACTOR	1.000	0.993
Pbar	BAROMETRIC PRESSURE, INCHES HG	29.20	29.20
Delta H	AVG. PRESSURE DIFFERENTIAL OF ORIFICE METER, INCHES H2O	2.430	4.022
Vm	VOLUME OF METERED GAS SAMPLE, DRY ACF	107.487	146.903
tm	DRY GAS METER TEMPERATURE, DEGREES F	86	78
Vm(std)	VOLUME OF METERED GAS SAMPLE, DRY SCF*	102.022	141.077
Vlc	TOTAL VOLUME OF LIQUID COLLECTED IN IMPINGERS & SILICA GEL, ML	46.5	44.5
Vw(std)	VOLUME OF WATER VAPOR, SCF*	2.189	2.095
%H2O	MOISTURE CONTENT, PERCENT BY VOLUME	2.1	1.5
Mfd	DRY MOLE FRACTION	0.979	0.985
Md	ESTIMATED DRY MOLECULAR WT, LB/LB-MOLE	28.84	28.84
Ms	WET MOLECULAR WEIGHT, LB/LB-MOLE	28.61	28.68
Pg	FLUE GAS STATIC PRESSURE, INCHES H2O	-1.35	-1.70
Ps	ABSOLUTE FLUE GAS PRESS., INCHES HG	29.10	29.08
ts	FLUE GAS TEMPERATURE, DEGREES F	74	80
Delta p	AVERAGE VELOCITY HEAD, INCHES H2O	0.5780	3.8840
vs	FLUE GAS VELOCITY, FEET/SECOND	43.73	113.9
A	STACK/DUCT AREA, SQUARE INCHES	443.0	143.0
Qsd	VOLUMETRIC AIR FLOW RATE, DRY SCFM*	7,596	6,351
Qaw	VOLUMETRIC AIR FLOW RATE, WET ACFM	8,071	6,786
%I	ISOKINETIC SAMPLING RATE, PERCENT	100.9	98.5

* 68 Degrees F -- 29.92 Inches of Mercury (Hg)

(continued next page)

		MI-3	MO-3	
	HEXAVALENT CHROMIUM:			
mg	CATCH, MILLIGRAMS	(4,467.0)	(693.0)	
gr/DSCF	CONCENTRATION, GRAINS PER DSCF*	(0.6757)	(0.07581)	
Lb/Hr	EMISSION RATE, LBS/HOUR	(43.99)	(4.127)	
	TOTAL CHROMIUM:			
mg	TOTAL CATCH, MILLIGRAMS	(4,874.0)	(750.0)	
gr/DSCF	CONCENTRATION, GRAINS PER DSCF*	(0.7373)	(0.08204)	
Lb/Hr	EMISSION RATE, LBS/HOUR	(48.00)	(4.466)	
	FLUE GAS TEMPERATURE:			
	Degrees Fahrenheit	74	80	deg. F
	Degrees Centigrade	23	27	deg. C
	AIR FLOW RATES x million:			
	Actual Cubic Meters/hr	0.0137	0.0115	acmh
	Actual Cubic Feet/hr	0.4843	0.4072	acfh
	Dry Std. Cubic Meters/hr*	0.0129	0.0108	dscmh
	Dry Std. Cubic Feet/hr*	0.4557	0.3811	dscfh
	HEXAVALENT CHROMIUM:			
	Concentration, mg/dscm*	(1546.2699)	(173.4767)	mg/dscm
	Concentration, gr/dscf*	(0.675699)	(0.075807)	gr/dscf
	Emissions, kg/hr	(19.9544)	(1.8719)	kg/hr
	Emissions, lb/hr	(43.9919)	(4.1268)	lb/hr
	TOTAL CHROMIUM:			
	Concentration, mg/dscm*	(1687.1546)	(187.7454)	mg/dscm
	Concentration, gr/dscf*	(0.737264)	(0.082042)	gr/dscf
	Emissions, kg/hr	(21.7725)	(2.0258)	kg/hr
	Emissions, lb/hr	(48.0002)	(4.4662)	lb/hr

* 68 Degrees F -- 29.92 Inches of Mercury (Hg)

( ) = x 10^{-3}

PLANT	GREENSBORO IND. PLATERS	DATE: 03/19/86	OPERATOR: WSN
SAMPLING LOCATION	MIST ELIM. INLET	RUN NUMBER	MI-4
FILTER NUMBER(S)		NOZZLE #, NOZZLE DIAM.	104,.257
BAR. PRESS., in. Hg	29.2	METER BOX ΔH@	1.75
STATIC PRESS., in. H20	-1.33	SAMPLE BOX NUMBER	16
LEAK RATE, CFM	0.000	METER BOX NUMBER	N-7
LEAK TEST VACUUM, in Hg	8	ASSUMED MOISTURE	2

Trav. Point. No.	Sample Time (Min.)	Gas Meter Reading (Cu.Ft.)	Velocity Head (in.H20)	Orifice ΔH (in. H20) Desired	Orifice ΔH (in. H20) Actual	Gas Meter Temp. (deg. F)	Pump Vac. (in.Hg)	Filter Box Temp. (deg.F)	Imp. Exit Temp. (deg.F)	Stack Temp. (deg.F)	Leak Check
A-1	0/0	595.868	0.48	2.15	2.15	81	6	200	63	75	
A-2	5	600.14	0.45	2.02	2.02	83	6	200	63	75	
A-3	10	604.48	0.48	2.15	2.15	81	6	200	63	74	
A-4	15	608.97	0.55	2.47	2.47	83	7	200	64	74	
A-5	20	613.32	0.58	2.60	2.60	85	7	200	64	74	
A-6	25	618.17	0.62	2.78	2.78	87	7	200	64	74	
A-7	30	622.80	0.62	2.78	2.78	88	7	200	64	75	
A-8	35	627.59	0.65	2.92	2.92	89	7	200	64	75	
A-9	40	632.51	0.65	2.92	2.92	90	8	200	64	75	
A-10	45	637.44	0.65	2.92	2.92	92	8	200	64	75	
A-11	50	642.37	0.63	2.83	2.83	92	8	200	64	75	
A-12	55	647.27	0.64	2.87	2.87	92	8	200	64	76	
B-1	60/0	652.17	0.47	2.11	2.11	90	7	200	64	74	
	5	656.61	0.50	2.24	2.24	73	7	200	63	72	
	10	660.77	0.50	2.24	2.24	74	7	200	63	73	
	15	665.24	0.52	2.33	2.33	76	7	200	63	73	
B-2	20	669.53	0.56	2.51	2.51	79	7	200	64	73	
B-3	25	674.16	0.57	2.56	2.56	81	7	200	65	74	
B-4	30	678.63	0.48	2.15	2.15	84	6	200	65	74	
B-5	35	682.86	0.48	2.15	2.15	85	6	200	65	74	
B-6	40	687.11	0.48	2.15	2.15	86	6	200	65	73	
	45	691.48	0.50	2.24	2.24	88	6	200	65	74	
	50	695.64	0.49	2.20	2.20	88	6	200	65	74	
	55	700.02	0.50	2.24	2.24	89	6	200	65	74	
	120/OFF	704.286									
FINAL											
DIFF/AVG.		108.418	0.542		2.44	84.83				74.125	

PLANT	GREENSBORO IND. PLATERS	DATE: 03/19/86	OPERATOR: ST
SAMPLING LOCATION	MIST ELIM. OUTLET	RUN NUMBER	M0-4
FILTER NUMBER(S)		NOZZLE #, NOZZLE DIAM.	502,.155
BAR. PRESS., in. Hg	29.2	METER BOX ΔH@	1.76
STATIC PRESS., in. H20	-1.40	SAMPLE BOX NUMBER	30
LEAK RATE, CFM	0.000	METER BOX NUMBER	N-14
LEAK TEST VACUUM, in Hg	12	ASSUMED MOISTURE	2

Trav. Point. No.	Sample Time (Min.)	Gas Meter Reading (Cu.Ft.)	Velocity Head (in.H20)	Orifice (in. H20) Desired	ΔH Actual	Gas Meter Temp. (deg. F)	Pump Vac. (in.Hg)	Filter Box Temp. (deg.F)	Imp. Exit Temp. (deg.F)	Stack Temp. (deg.F)	Leak Check
A-1	0/0	918.508	3.00	1.81	1.81	80	7	125	50	80	
	4	921.610	3.00	1.81	1.81	80	7	125	50	80	
A-2	8/0	924.804	3.10	1.87	1.87	80	7	125	50	81	
	12	928.502	3.10	1.87	1.87	80	8	130	50	80	
A-3	16/0	931.102	3.40	2.65	2.65	80	8	130	50	81	
	20	934.307	3.40	2.65	2.65	81	8	130	50	81	
A-4	24/0	937.710	3.60	2.17	2.17	84	8	130	50	81	
	28	941.102	3.60	2.17	2.17	84	8	130	50	81	
A-5	32/0	944.506	4.40	2.65	2.65	84	8	130	50	82	
	36	947.805	4.40	2.65	2.65	84	8	130	50	82	
A-6	40/0	951.402	4.60	2.77	2.77	89	10	130	50	82	
	44	955.302	4.60	2.77	2.77	89	10	130	50	82	
A-7	48/0	958.808	4.60	2.77	2.77	89	10	130	50	82	
	52	962.607	4.60	2.77	2.77	92	10	130	50	82	
A-8	56/0	966.403	4.40	2.65	2.65	90	10	130	50	81	
	60	970.202	4.40	2.65	2.65	90	10	130	50	81	
B-1	64/0	974.085	2.99	1.80	1.80	84	10	130	50	80	
	4	977.506	2.99	1.80	1.80	64	8	130	50	76	
B-2	8/0	980.603	3.40	2.05	2.05	66	8	130	55	77	
	12	983.808	3.40	2.05	2.05	66	8	130	55	77	
B-3	16/0	987.210	4.00	2.41	2.41	70	8	130	55	79	
	20	990.604	4.00	2.41	2.41	70	8	130	55	79	
B-4	24/0	994.303	4.40	2.65	2.65	70	8	130	55	79	
	28	997.904	4.40	2.65	2.65	72	8	130	55	79	
B-5	32/0	1001.903	4.00	2.41	2.41	74	8	130	55	79	
	36	1005.210	4.00	2.41	2.41	76	9	130	55	79	
B-6	40/0	1008.807	4.20	2.53	2.53	78	9	130	55	79	
	44	1012.510	4.20	2.53	2.53	78	9	130	55	79	
B-7	48/0	1016.210	4.20	2.53	2.53	78	9	130	55	79	
	52	1019.804	4.20	2.53	2.53	78	9	130	55	79	
B-8	56/0	1023.502	4.20	2.53	2.53	78	9	130	55	79	
	60	1024.103	4.20	2.53	2.53	78	9	130	55	79	
	128/OFF	1030.797									
FINAL DIFF/AVG.		112.289	3.875		2.391	79.25				79.906	

PARTICULATE FIELD DATA & RESULTS TABULATION

PLANT: Greensboro Industrial Platers, Greensboro, North Carolina

RUN #	DATE	SAMPLING LOCATION	TEST TEAM LEADER
MI-4	03/19/86	Mist Eliminator Inlet	Willis S. Nesbit
MO-4	03/19/86	Mist Eliminator Outlet	Steve Terll

		MI-4	MO-4
	RUN START TIME	1110	1110
	RUN FINISH TIME	1600	1606
	NET SAMPLING POINTS	18	16
Theta	NET RUN TIME, MINUTES	120.00	128.00
Dia	NOZZLE DIAMETER, INCHES	0.257	0.155
Cp	PITOT TUBE COEFFICIENT	0.840	0.840
Y	DRY GAS METER CALIBRATION FACTOR	1.000	0.993
Pbar	BAROMETRIC PRESSURE, INCHES HG	29.20	29.20
Delta H	AVG. PRESSURE DIFFERENTIAL OF ORIFICE METER, INCHES H2O	2.440	2.391
Vm	VOLUME OF METERED GAS SAMPLE, DRY ACF	108.418	112.289
tm	DRY GAS METER TEMPERATURE, DEGREES F	85	79
Vm(std)	VOLUME OF METERED GAS SAMPLE, DRY SCF*	103.097	107.198
Vlc	TOTAL VOLUME OF LIQUID COLLECTED IN IMPINGERS & SILICA GEL, ML	51.5	42.5
Vw(std)	VOLUME OF WATER VAPOR, SCF*	2.424	2.000
%H2O	MOISTURE CONTENT, PERCENT BY VOLUME	2.3	1.8
Mfd	DRY MOLE FRACTION	0.977	0.982
Md	ESTIMATED DRY MOLECULAR WT, LB/LB-MOLE	28.84	28.84
Ms	WET MOLECULAR WEIGHT, LB/LB-MOLE	28.59	28.64
Pg	FLUE GAS STATIC PRESSURE, INCHES H2O	-1.33	-1.40
Ps	ABSOLUTE FLUE GAS PRESS., INCHES HG	29.10	29.10
ts	FLUE GAS TEMPERATURE, DEGREES F	74	80
Delta p	AVERAGE VELOCITY HEAD, INCHES H2O	0.5420	3.8750
vs	FLUE GAS VELOCITY, FEET/SECOND	42.36	113.8
A	STACK/DUCT AREA, SQUARE INCHES	443.0	143.0
Qsd	VOLUMETRIC AIR FLOW RATE, DRY SCFM*	7,343	6,327
Qaw	VOLUMETRIC AIR FLOW RATE, WET ACFM	7,818	6,780
%I	ISOKINETIC SAMPLING RATE, PERCENT	99.8	100.2

* 68 Degrees F -- 29.92 Inches of Mercury (Hg)

(continued next page)

		MI-4	MO-4	
	HEXAVALENT CHROMIUM:			
mg	CATCH, MILLIGRAMS	(7,560.0)	(1,538.0)	
gr/DSCF	CONCENTRATION, GRAINS PER DSCF*	(1.132)	(0.2214)	
Lb/Hr	EMISSION RATE, LBS/HOUR	(71.23)	(12.01)	
	TOTAL CHROMIUM:			
mg	TOTAL CATCH, MILLIGRAMS	(8,570.0)	(1,714.0)	
gr/DSCF	CONCENTRATION, GRAINS PER DSCF*	(1.283)	(0.2467)	
Lb/Hr	EMISSION RATE, LBS/HOUR	(80.75)	(13.38)	
	FLUE GAS TEMPERATURE:			
	Degrees Fahrenheit	74	80	deg. F
	Degrees Centigrade	23	27	deg. C
	AIR FLOW RATES x million:			
	Actual Cubic Meters/hr	0.0133	0.0115	acmh
	Actual Cubic Feet/hr	0.4691	0.4068	acfh
	Dry Std. Cubic Meters/hr*	0.0125	0.0108	dscmh
	Dry Std. Cubic Feet/hr*	0.4406	0.3796	dscfh
	HEXAVALENT CHROMIUM:			
	Concentration, mg/dscm*	(2589.6358)	(506.6799)	mg/dscm
	Concentration, gr/dscf*	(1.131636)	(0.221412)	gr/dscf
	Emissions, kg/hr	(32.3092)	(5.4464)	kg/hr
	Emissions, lb/hr	(71.2296)	(12.0072)	lb/hr
	TOTAL CHROMIUM:			
	Concentration, mg/dscm*	(2935.6056)	(564.6615)	mg/dscm
	Concentration, gr/dscf*	(1.282821)	(0.246750)	gr/dscf
	Emissions, kg/hr	(36.6256)	(6.0696)	kg/hr
	Emissions, lb/hr	(80.7458)	(13.3812)	lb/hr

* 68 Degrees F -- 29.92 Inches of Mercury (Hg)

( ) = x 10^{-3}

PLANT	GREENSBORO IND. PLATERS	DATE: 03/26/86	OPERATOR: WSN
SAMPLING LOCATION	COATING TANK #6 MIST ELIMINATOR OUTLET	RUN NUMBER	MO-5A
FILTER NUMBER(S)		NOZZLE #, NOZZLE DIAM.	103,.177
BAR. PRESS., in. Hg	29.5	METER BOX ΔH@	1.76
STATIC PRESS., in. H2O	-1.75	SAMPLE BOX NUMBER	12
LEAK RATE, CFM	0.000	METER BOX NUMBER	N-14
LEAK TEST VACUUM, in Hg	10	ASSUMED MOISTURE	2

Trav. Point. No.	Sample Time (Min.)	Gas Meter Reading (Cu.Ft.)	Velocity Head (in.H2O)	Orifice ΔH (in. H2O) Desired	Orifice ΔH (in. H2O) Actual	Gas Meter Temp. (deg. F)	Pump Vac. (in.Hg)	Filter Box Temp. (deg.F)	Imp. Exit Temp. (deg.F)	Stack Temp. (deg.F)	Leak Check
B-5	0/0	339.575	4.30	4.40	4.40	62	9	NA	63	74	
	10	351.46	4.30	4.40	4.40	71	9	NA	63	74	
	20	363.57	4.28	4.38	4.38	78	9	NA	63	74	
	30	375.71	4.30	4.40	4.40	79	9	NA	63	75	
	40	387.73	4.30	4.40	4.40	81	9	NA	63	75	
	50	399.84	4.25	4.44	4.44	82	9	NA	64	75	
A-4	60/0	412.03	4.65	4.75	4.75	75	9	NA	65	76	
	10	424.62	4.70	4.80	4.80	82	9	NA	65	76	
	20	437.34	4.70	4.80	4.80	86	9	NA	65	76	
	30	450.06	4.70	4.80	4.80	87	9	NA	65	76	
	40	462.74	4.60	4.70	4.70	88	9	NA	65	76	
	50	475.48	4.60	4.70	4.70	89	9	NA	65	76	
	120/OFF	487.820									
FINAL DIFF/AVG.		148.245	4.471		4.581	80				75.25	

PLANT	GREENSBORO IND. PLATERS	DATE: 03/26/86	OPERATOR: WSN
SAMPLING LOCATION	COATING TANK #6 MIST ELIMINATOR OUTLET	RUN NUMBER	MO-5B
FILTER NUMBER(S)		NOZZLE #, NOZZLE DIAM.	703,.169
BAR. PRESS., in. Hg	29.5	METER BOX ΔH@	1.75
STATIC PRESS., in. H2O	-1.73	SAMPLE BOX NUMBER	16
LEAK RATE, CFM	0.000	METER BOX NUMBER	R-2
LEAK TEST VACUUM, in Hg	7	ASSUMED MOISTURE	2

Trav. Point. No.	Sample Time (Min.)	Gas Meter Reading (Cu.Ft.)	Velocity Head (in.H2O)	Orifice (in. H2O) Desired	ΔH Actual	Gas Meter Temp. (deg. F)	Pump Vac. (in.Hg)	Filter Box Temp. (deg.F)	Imp. Exit Temp. (deg.F)	Stack Temp. (deg.F)	Leak Check
A-2	0/0	809.402	4.60	3.98	3.98	72	6	NA	62	73	
	10	820.57	4.58	3.95	3.95	80	6	NA	63	73	
	20	831.77	4.65	4.02	4.02	92	6	NA	63	74	
	30	842.94	4.40	3.82	3.82	95	6	NA	64	74	
	40	854.08	4.40	3.82	3.82	98	6	NA	64	75	
	50	865.36	4.40	3.82	3.82	98	6	NA	64	75	
B-7	60/0	876.51	4.60	3.98	3.98	82	6	NA	64	74	
	10	887.99	4.40	3.82	3.82	92	6	NA	64	75	
	20	899.38	4.30	3.78	3.78	96	6	NA	64	75	
	30	910.69	4.30	3.78	3.78	102	6	NA	64	75	
	40	921.97	4.20	3.65	3.65	104	6	NA	64	75	
	50	933.29	4.20	3.65	3.65	109	6	NA	64	77	
	120/OFF	944.420									
FINAL DIFF/AVG.		135.018	4.418		3.839	93.33				74.583	

PARTICULATE FIELD DATA & RESULTS TABULATION

PLANT: Greensboro Industrial Platers, Greensboro, North Carolina

RUN #	DATE	SAMPLING LOCATION	TEST TEAM LEADER
MO-5A	03/26/86	Coating Tank #6 Mist Eliminator Outlet	Willis S. Nesbit
MO-5B	03/26/86	Coating Tank #6 Mist Eliminator Outlet	Willis S. Nesbit

		MO-5A	MO-5B
	RUN START TIME	831	834
	RUN FINISH TIME	1054	1055
	NET SAMPLING POINTS	2	2
Theta	NET RUN TIME, MINUTES	120.00	120.00
Dia	NOZZLE DIAMETER, INCHES	0.177	0.169
Cp	PITOT TUBE COEFFICIENT	0.840	0.840
Y	DRY GAS METER CALIBRATION FACTOR	0.993	0.996
Pbar	BAROMETRIC PRESSURE, INCHES HG	29.50	29.50
Delta H	AVG. PRESSURE DIFFERENTIAL OF ORIFICE METER, INCHES H2O	4.580	3.840
Vm	VOLUME OF METERED GAS SAMPLE, DRY ACF	148.245	135.018
tm	DRY GAS METER TEMPERATURE, DEGREES F	80	93
Vm(std)	VOLUME OF METERED GAS SAMPLE, DRY SCF*	143.479	127.757
Vlc	TOTAL VOLUME OF LIQUID COLLECTED IN IMPINGERS & SILICA GEL, ML	11.0	30.5
Vw(std)	VOLUME OF WATER VAPOR, SCF*	0.518	1.436
%H2O	MOISTURE CONTENT, PERCENT BY VOLUME	0.4	1.1
Mfd	DRY MOLE FRACTION	0.996	0.989
Md	ESTIMATED DRY MOLECULAR WT, LB/LB-MOLE	28.84	28.84
Ms	WET MOLECULAR WEIGHT, LB/LB-MOLE	28.80	28.72
Pg	FLUE GAS STATIC PRESSURE, INCHES H2O	-1.75	-1.73
Ps	ABSOLUTE FLUE GAS PRESS., INCHES HG	29.37	29.37
ts	FLUE GAS TEMPERATURE, DEGREES F	75	75
Delta p	AVERAGE VELOCITY HEAD, INCHES H2O	4.4710	4.4180
vs	FLUE GAS VELOCITY, FEET/SECOND	120.8	120.2
A	STACK/DUCT AREA, SQUARE INCHES	143.0	143.0
Qsd	VOLUMETRIC AIR FLOW RATE, DRY SCFM*	6,943	6,860
Qaw	VOLUMETRIC AIR FLOW RATE, WET ACFM	7,196	7,163
%I	ISOKINETIC SAMPLING RATE, PERCENT	99.9	98.8

* 68 Degrees F -- 29.92 Inches of Mercury (Hg)

(continued next page)

		MO-5A	MO-5B	
	HEXAVALENT CHROMIUM:			
mg	CATCH, MILLIGRAMS	(897.0)	(790.0)	
gr/DSCF	CONCENTRATION, GRAINS PER DSCF*	(0.09648)	(0.09543)	
Lb/Hr	EMISSION RATE, LBS/HOUR	(5.742)	(5.611)	
	TOTAL CHROMIUM:			
mg	TOTAL CATCH, MILLIGRAMS	(862.0)	(743.0)	
gr/DSCF	CONCENTRATION, GRAINS PER DSCF*	(0.09272)	(0.08975)	
Lb/Hr	EMISSION RATE, LBS/HOUR	(5.518)	(5.277)	
	FLUE GAS TEMPERATURE:			
	Degrees Fahrenheit	75	75	deg. F
	Degrees Centigrade	24	24	deg. C
	AIR FLOW RATES x million:			
	Actual Cubic Meters/hr	0.0122	0.0122	acmh
	Actual Cubic Feet/hr	0.4317	0.4298	acfh
	Dry Std. Cubic Meters/hr*	0.0118	0.0117	dscmh
	Dry Std. Cubic Feet/hr*	0.4166	0.4116	dscfh
	HEXAVALENT CHROMIUM:			
	Concentration, mg/dscm*	(220.7852)	(218.3771)	mg/dscm
	Concentration, gr/dscf*	(0.096480)	(0.095428)	gr/dscf
	Emissions, kg/hr	(2.6045)	(2.5451)	kg/hr
	Emissions, lb/hr	(5.7419)	(5.6111)	lb/hr
	TOTAL CHROMIUM:			
	Concentration, mg/dscm*	(212.1704)	(205.3850)	mg/dscm
	Concentration, gr/dscf*	(0.092716)	(0.089751)	gr/dscf
	Emissions, kg/hr	(2.5029)	(2.3937)	kg/hr
	Emissions, lb/hr	(5.5179)	(5.2772)	lb/hr

* 68 Degrees F -- 29.92 Inches of Mercury (Hg)

( ) = x 10^{-3}

PLANT	GREENSBORO IND. PLATERS	DATE: 03/26/86	OPERATOR: WSN
SAMPLING LOCATION	COATING TANK #6 MIST ELIMINATOR OUTLET	RUN NUMBER	MO-6A
FILTER NUMBER(S)		NOZZLE #, NOZZLE DIAM.	103,.177
BAR. PRESS., in. Hg	29.5	METER BOX ΔH@	1.76
STATIC PRESS., in. H20	-1.73	SAMPLE BOX NUMBER	12
LEAK RATE, CFM	0.000	METER BOX NUMBER	N-14
LEAK TEST VACUUM, in Hg	12	ASSUMED MOISTURE	2

Trav. Point. No.	Sample Time (Min.)	Gas Meter Reading (Cu.Ft.)	Velocity Head (in.H20)	Orifice ΔH (in. H20) Desired	Orifice ΔH (in. H20) Actual	Gas Meter Temp. (deg.F)	Pump Vac. (in.Hg)	Filter Box Temp. (deg.F)	Imp. Exit Temp. (deg.F)	Stack Temp. (deg.F)	Leak Check
A-4	0/0	488.438	4.50	4.60	4.60	73	11	NA	63	77	
	10	501.02	4.45	4.55	4.55	79	11	NA	64	77	
	20	513.45	4.60	4.70	4.70	83	11	NA	65	77	
	30	525.86	4.60	4.70	4.70	89	11	NA	65	77	
	40	538.73	4.50	4.60	4.60	89	11	NA	65	77	
	50	550.88	4.50	4.60	4.60	90	11	NA	65	77	
B-5	60/0	563.22	4.20	4.29	4.29	83	11	NA	65	77	
	10	575.47	4.30	4.40	4.40	90	11	NA	65	77	
	20	587.42	4.30	4.40	4.40	92	11	NA	65	78	
	30	599.54	4.30	4.40	4.40	93	11	NA	65	79	
	40	611.63	4.30	4.40	4.40	93	11	NA	65	79	
	50	624.32	4.30	4.40	4.40	92	11	NA	65	78	
	120/OFF	635.922									
FINAL DIFF/AVG.		147.484	4.403		4.503	87.17				77.5	

PLANT	GREENSBORO IND. PLATERS	DATE: 03/26/86	OPERATOR: WSN
SAMPLING LOCATION	COATING TANK #6 MIST ELIMINATOR OUTLET	RUN NUMBER	MO-6B
FILTER NUMBER(S)		NOZZLE #, NOZZLE DIAM.	702,.179
BAR. PRESS., in. Hg	29.5	METER BOX ΔH@	1.75
STATIC PRESS., in. H20	-1.75	SAMPLE BOX NUMBER	14
LEAK RATE, CFM	0.000	METER BOX NUMBER	R-2
LEAK TEST VACUUM, in Hg	8	ASSUMED MOISTURE	2

Trav. Point. No.	Sample Time (Min.)	Gas Meter Reading (Cu.Ft.)	Velocity Head (in.H20)	Orifice (in. H20) Desired	ΔH Actual	Gas Meter Temp. (deg. F)	Pump Vac. (in.Hg)	Filter Box Temp. (deg.F)	Imp. Exit Temp. (deg.F)	Stack Temp. (deg.F)	Leak Check
B-5	0/0	944.712	4.20	4.68	4.68	82	7	NA	64	77	
	10	957.09	4.20	4.68	4.68	91	7	NA	64	77	
	20	969.63	4.10	4.55	4.55	101	7	NA	64	77	
	30	981.76	4.10	4.55	4.55	103	7	NA	64	78	
	40	994.35	4.15	4.62	4.62	106	7	NA	64	77	
	50	1006.34	4.15	4.62	4.62	108	7	NA	64	77	
A-4	60/0	1018.71	3.70	4.06	4.06	96	7	NA	64	77	
	10	1030.43	3.80	4.20	4.20	104	7	NA	64	75	
	20	1042.18	3.80	4.20	4.20	105	7	NA	64	76	
	30	1053.63	4.10	4.55	4.55	106	7	NA	64	77	
	40	1065.45	4.20	4.68	4.68	107	7	NA	65	79	
	50	1078.03	4.10	4.55	4.55	108	7	NA	65	79	
	120/OFF	1090.646									
FINAL DIFF/AVG.		145.934	4.048		4.495	101.4				77.167	

PARTICULATE FIELD DATA & RESULTS TABULATION

PLANT: Greensboro Industrial Platers, Greensboro, North Carolina

RUN #	DATE	SAMPLING LOCATION	TEST TEAM LEADER
MO-6A	03/26/86	Coating Tank #6 Mist Eliminator Outlet	Willis S. Nesbit
MO-6B	03/26/86	Coating Tank #6 Mist Eliminator Outlet	Willis S. Nesbit

		MO-6A	MO-6B
	RUN START TIME	1150	1151
	RUN FINISH TIME	1356	1357
	NET SAMPLING POINTS	2	2
Theta	NET RUN TIME, MINUTES	120.00	120.00
Dia	NOZZLE DIAMETER, INCHES	0.177	0.179
Cp	PITOT TUBE COEFFICIENT	0.840	0.840
Y	DRY GAS METER CALIBRATION FACTOR	0.993	0.996
Pbar	BAROMETRIC PRESSURE, INCHES HG	29.50	29.50
Delta H	AVG. PRESSURE DIFFERENTIAL OF ORIFICE METER, INCHES H2O	4.500	4.500
Vm	VOLUME OF METERED GAS SAMPLE, DRY ACF	147.484	145.934
tm	DRY GAS METER TEMPERATURE, DEGREES F	87	101
Vm(std)	VOLUME OF METERED GAS SAMPLE, DRY SCF*	140.888	136.339
Vlc	TOTAL VOLUME OF LIQUID COLLECTED IN IMPINGERS & SILICA GEL, ML	27.0	36.5
Vw(std)	VOLUME OF WATER VAPOR, SCF*	1.271	1.718
%H2O	MOISTURE CONTENT, PERCENT BY VOLUME	0.9	1.2
Mfd	DRY MOLE FRACTION	0.991	0.988
Md	ESTIMATED DRY MOLECULAR WT, LB/LB-MOLE	28.84	28.84
Ms	WET MOLECULAR WEIGHT, LB/LB-MOLE	28.74	28.70
Pg	FLUE GAS STATIC PRESSURE, INCHES H2O	-1.73	-1.75
Ps	ABSOLUTE FLUE GAS PRESS., INCHES HG	29.37	29.37
ts	FLUE GAS TEMPERATURE, DEGREES F	78	77
Delta p	AVERAGE VELOCITY HEAD, INCHES H2O	4.4030	4.0480
vs	FLUE GAS VELOCITY, FEET/SECOND	120.3	115.3
A	STACK/DUCT AREA, SQUARE INCHES	143.0	143.0
Qsd	VOLUMETRIC AIR FLOW RATE, DRY SCFM*	6,841	6,547
Qaw	VOLUMETRIC AIR FLOW RATE, WET ACFM	7,168	6,871
%I	ISOKINETIC SAMPLING RATE, PERCENT	99.6	98.5

* 68 Degrees F -- 29.92 Inches of Mercury (Hg)

(continued next page)

		MO-6A	MO-6B	
	HEXAVALENT CHROMIUM:			
mg	CATCH, MILLIGRAMS	(1,460.0)	(739.0)	
gr/DSCF	CONCENTRATION, GRAINS PER DSCF*	(0.1599)	(0.08365)	
Lb/Hr	EMISSION RATE, LBS/HOUR	(9.378)	(4.694)	
	TOTAL CHROMIUM:			
mg	TOTAL CATCH, MILLIGRAMS	(1,393.0)	(750.0)	
gr/DSCF	CONCENTRATION, GRAINS PER DSCF*	(0.1526)	(0.08489)	
Lb/Hr	EMISSION RATE, LBS/HOUR	(8.948)	(4.764)	
	FLUE GAS TEMPERATURE:			
	Degrees Fahrenheit	78	77	deg. F
	Degrees Centigrade	26	25	deg. C
	AIR FLOW RATES x million:			
	Actual Cubic Meters/hr	0.0122	0.0117	acmh
	Actual Cubic Feet/hr	0.4301	0.4123	acfh
	Dry Std. Cubic Meters/hr*	0.0116	0.0111	dscmh
	Dry Std. Cubic Feet/hr*	0.4105	0.3928	dscfh
	HEXAVALENT CHROMIUM:			
	Concentration, mg/dscm*	(365.9694)	(191.4213)	mg/dscm
	Concentration, gr/dscf*	(0.159924)	(0.083649)	gr/dscf
	Emissions, kg/hr	(4.2537)	(2.1291)	kg/hr
	Emissions, lb/hr	(9.3779)	(4.6939)	lb/hr
	TOTAL CHROMIUM:			
	Concentration, mg/dscm*	(349.1749)	(194.2706)	mg/dscm
	Concentration, gr/dscf*	(0.152585)	(0.084894)	gr/dscf
	Emissions, kg/hr	(4.0585)	(2.1608)	kg/hr
	Emissions, lb/hr	(8.9475)	(4.7638)	lb/hr

* 68 Degrees F -- 29.92 Inches of Mercury (Hg)

( ) = x 10^{-3}

PLANT	GREENSBORO IND. PLATERS	DATE: 03/26/86	OPERATOR: WSN
SAMPLING LOCATION	COATING TANK #6 MIST ELIMINATOR OUTLET	RUN NUMBER	MO-7A
FILTER NUMBER(S)		NOZZLE #, NOZZLE DIAM.	101,.177
BAR. PRESS., in. Hg	29.5	METER BOX ΔH@	1.76
STATIC PRESS., in. H20	-1.70	SAMPLE BOX NUMBER	12
LEAK RATE, CFM	0.000	METER BOX NUMBER	N-14
LEAK TEST VACUUM, in Hg	12	ASSUMED MOISTURE	2

Trav. Point. No.	Sample Time (Min.)	Gas Meter Reading (Cu.Ft.)	Velocity Head (in.H20)	Orifice ΔH (in. H20) Desired	Orifice ΔH (in. H20) Actual	Gas Meter Temp. (deg. F)	Pump Vac. (in.Hg)	Filter Box Temp. (deg.F)	Imp. Exit Temp. (deg.F)	Stack Temp. (deg.F)	Leak Check
B-4	0/0	636.045	4.70	4.80	4.80	84	11	NA	63	80	
	10	648.53	4.70	4.80	4.80	88	11	NA	63	80	
	20	661.20	4.70	4.80	4.80	88	11	NA	64	80	
	30	673.88	4.70	4.80	4.80	90	11	NA	64	80	
	40	686.62	4.70	4.80	4.80	92	11	NA	64	80	
	50	699.63	4.70	4.80	4.80	92	11	NA	64	79	
A-4	60/0	712.99	4.30	4.40	4.40	85	11	NA	64	79	
	10	724.28	4.35	4.45	4.45	92	11	NA	64	80	
	20	736.53	4.30	4.40	4.40	94	11	NA	64	79	
	30	748.60	4.25	4.34	4.34	93	11	NA	64	79	
	40	760.70	4.30	4.40	4.40	94	11	NA	65	80	
	50	772.78	4.35	4.45	4.45	92	11	NA	65	80	
	120/OFF	784.763									
FINAL DIFF/AVG.		148.718	4.502		4.603	90.33				79.667	

PLANT	GREENSBORO IND. PLATERS	DATE: 03/26/86	OPERATOR: WSN
SAMPLING LOCATION	COATING TANK #6 MIST ELIMINATOR OUTLET	RUN NUMBER	MO-7B
FILTER NUMBER(S)		NOZZLE #, NOZZLE DIAM.	703,.169
BAR. PRESS., in. Hg	29.5	METER BOX ΔH@	1.75
STATIC PRESS., in. H2O	-1.72	SAMPLE BOX NUMBER	14
LEAK RATE, CFM	0.000	METER BOX NUMBER	R-2
LEAK TEST VACUUM, in Hg	8	ASSUMED MOISTURE	2

Trav. Point. No.	Sample Time (Min.)	Gas Meter Reading (Cu.Ft.)	Velocity Head (in.H2O)	Orifice ΔH (in. H2O) Desired	Orifice ΔH (in. H2O) Actual	Gas Meter Temp. (deg. F)	Pump Vac. (in.Hg)	Filter Box Temp. (deg.F)	Imp. Exit Temp. (deg.F)	Stack Temp. (deg.F)	Leak Check
A-4	0/0	90.722	4.40	3.85	3.85	92	7	NA	63	77	
	10	102.20	4.50	3.92	3.92	99	7	NA	63	79	
	20	113.90	4.40	3.85	3.85	106	7	NA	63	80	
	30	125.98	4.40	3.85	3.85	108	7	NA	63	80	
	40	137.67	4.50	3.92	3.92	109	7	NA	63	80	
	50	149.74	4.40	3.85	3.85	110	7	NA	63	79	
B-4	60/0	161.51	4.80	4.20	4.20	94	7	NA	63	80	
	10	173.38	4.50	3.92	3.92	104	7	NA	63	80	
	20	184.82	4.50	3.92	3.92	108	7	NA	63	80	
	30	196.29	4.80	4.20	4.20	109	7	NA	63	80	
	40	208.13	4.70	4.10	4.10	110	7	NA	63	80	
	50	220.00	4.70	4.10	4.10	110	7	NA	63	80	
	120/OFF	231.839									
FINAL DIFF/AVG.		141.117	4.549		3.973	104.9				79.583	

PARTICULATE FIELD DATA & RESULTS TABULATION

PLANT: Greensboro Industrial Platers, Greensboro, North Carolina

RUN #	DATE	SAMPLING LOCATION	TEST TEAM LEADER
MO-7A	03/26/86	Coating Tank #6 Mist Eliminator Outlet	Willis S. Nesbit
MO-7B	03/26/86	Coating Tank #6 Mist Eliminator Outlet	Willis S. Nesbit

		MO-7A	MO-7B
	RUN START TIME	1408	1409
	RUN FINISH TIME	1628	1629
	NET SAMPLING POINTS	2	2
Theta	NET RUN TIME, MINUTES	120.00	120.00
Dia	NOZZLE DIAMETER, INCHES	0.177	0.169
Cp	PITOT TUBE COEFFICIENT	0.840	0.840
Y	DRY GAS METER CALIBRATION FACTOR	0.993	0.996
Pbar	BAROMETRIC PRESSURE, INCHES HG	29.50	29.50
Delta H	AVG. PRESSURE DIFFERENTIAL OF ORIFICE METER, INCHES H2O	4.600	3.970
Vm	VOLUME OF METERED GAS SAMPLE, DRY ACF	148.718	141.117
tm	DRY GAS METER TEMPERATURE, DEGREES F	90	105
Vm(std)	VOLUME OF METERED GAS SAMPLE, DRY SCF*	141.326	130.734
Vlc	TOTAL VOLUME OF LIQUID COLLECTED IN IMPINGERS & SILICA GEL, ML	22.5	41.0
Vw(std)	VOLUME OF WATER VAPOR, SCF*	1.059	1.930
%H2O	MOISTURE CONTENT, PERCENT BY VOLUME	0.7	1.5
Mfd	DRY MOLE FRACTION	0.993	0.985
Md	ESTIMATED DRY MOLECULAR WT, LB/LB-MOLE	28.84	28.84
Ms	WET MOLECULAR WEIGHT, LB/LB-MOLE	28.76	28.68
Pg	FLUE GAS STATIC PRESSURE, INCHES H2O	-1.70	-1.72
Ps	ABSOLUTE FLUE GAS PRESS., INCHES HG	29.38	29.37
ts	FLUE GAS TEMPERATURE, DEGREES F	80	80
Delta p	AVERAGE VELOCITY HEAD, INCHES H2O	4.5020	4.5490
vs	FLUE GAS VELOCITY, FEET/SECOND	121.8	122.6
A	STACK/DUCT AREA, SQUARE INCHES	143.0	143.0
Qsd	VOLUMETRIC AIR FLOW RATE, DRY SCFM*	6,914	6,909
Qaw	VOLUMETRIC AIR FLOW RATE, WET ACFM	7,259	7,307
%I	ISOKINETIC SAMPLING RATE, PERCENT	98.9	100.4

* 68 Degrees F -- 29.92 Inches of Mercury (Hg)

(continued next page)

		MO-7A	MO-7B	
	HEXAVALENT CHROMIUM:			
mg	CATCH, MILLIGRAMS	(1,050.0)	(797.0)	
gr/DSCF	CONCENTRATION, GRAINS PER DSCF*	(0.1147)	(0.09408)	
Lb/Hr	EMISSION RATE, LBS/HOUR	(6.795)	(5.572)	
	TOTAL CHROMIUM:			
mg	TOTAL CATCH, MILLIGRAMS	(1,000.0)	(776.0)	
gr/DSCF	CONCENTRATION, GRAINS PER DSCF*	(0.1092)	(0.09160)	
Lb/Hr	EMISSION RATE, LBS/HOUR	(6.471)	(5.425)	
	FLUE GAS TEMPERATURE:			
	Degrees Fahrenheit	80	80	deg. F
	Degrees Centigrade	27	27	deg. C
	AIR FLOW RATES x million:			
	Actual Cubic Meters/hr	0.0123	0.0124	acmh
	Actual Cubic Feet/hr	0.4355	0.4384	acfh
	Dry Std. Cubic Meters/hr*	0.0117	0.0117	dscmh
	Dry Std. Cubic Feet/hr*	0.4148	0.4145	dscfh
	HEXAVALENT CHROMIUM:			
	Concentration, mg/dscm*	(262.3801)	(215.2953)	mg/dscm
	Concentration, gr/dscf*	(0.114657)	(0.094081)	gr/dscf
	Emissions, kg/hr	(3.0820)	(2.5272)	kg/hr
	Emissions, lb/hr	(6.7946)	(5.5715)	lb/hr
	TOTAL CHROMIUM:			
	Concentration, mg/dscm*	(249.8858)	(209.6225)	mg/dscm
	Concentration, gr/dscf*	(0.109197)	(0.091602)	gr/dscf
	Emissions, kg/hr	(2.9352)	(2.4606)	kg/hr
	Emissions, lb/hr	(6.4710)	(5.4247)	lb/hr

* 68 Degrees F -- 29.92 Inches of Mercury (Hg)

( ) = x 10^{-3}

PARTICLE SIZING FIELD DATA & RESULTS TABULATION

RUN MO-S1

PLANT: Greensboro Industrial Platers, Greensboro, North Carolina

SAMPLING LOCATION: Tank #6 Mist Eliminator Outlet DATE: 032486

	START-FINISH TIME:	1304-1614		VOLUME METERED, ACF:	89.231
SR)	SAMPLING RATE, ACFM	0.597		NOZZLE DIA., INCHES:	0.126
ST)	SAMPLING TIME, MINUTES:	152.53	Y)	METER CAL. FACTOR:	0.993
PB)	BARO. PRESS.,IN.HG.:	29.50	TM)	METER TEMP., DEG F:	76
PSI)	STATIC PRESS., IN. H2O:	-1.76	DH)	DELTA H AVG., IN. H2O:	1.05
TS)	STACK GAS TEMP., DEG F:	76	DEN)	PARTICLE DENSITY, GM/CC:	1.00
PMV)	MOISTURE % BY VOLUME:	2.0	VCF)	VISCOSITY CORR. FACTOR:	1.004
DCF)	DENSITY CORR. FACTOR:	1.000	MD)	MOL WT, DRY LB/LB-MOLE:	28.84
	ISOKINETICS, %	101.1		CONCENT., GR/DSCF:	0.0563

STAGE NO.	- PARTICLE DIAMETER - (microns) FROM GRAPH	AERODYNAMIC	CATCH WEIGHT (µg)	PERCENT OF TOTAL (%)	CUM. % LESS THAN GIVEN DIA
PreSep	10.99	11.03	198.00	62.9	37.1
0	12.48	12.53	11.50	3.7	33.4
1	7.82	7.85	10.30	3.3	30.1
2	5.23	5.25	26.00	8.3	21.8
3	3.62	3.63	23.00	7.3	14.5
4	2.28	2.29	16.20	5.1	9.4
5	1.17	1.17	9.40	3.0	6.4
6	0.72	0.72	9.40	3.0	3.4
7	0.49	0.49	10.80	3.4	0.0
FILTER	< 0.49	< 0.49	0.00	0.0	
		TOTAL CATCH	314.60		

PARTICLE SIZING FIELD DATA & RESULTS TABULATION

RUN MI-S1

PLANT: Greensboro Industrial Platers, Greensboro, North Carolina

SAMPLING LOCATION: Tank #6 Mist Eliminator Inlet DATE: 032486

	START-FINISH TIME:	1304-1614		VOLUME METERED, ACF:	82.077
SR)	SAMPLING RATE, ACFM	0.533		NOZZLE DIA., INCHES:	0.190
ST)	SAMPLING TIME, MINUTES:	156.00	Y)	METER CAL. FACTOR:	1.000
PB)	BARO. PRESS.,IN.HG.:	29.50	TM)	METER TEMP., DEG F:	80
PSI)	STATIC PRESS., IN. H2O:	-1.35	DH)	DELTA H AVG., IN. H2O:	0.77
TS)	STACK GAS TEMP., DEG F:	73	DEN)	PARTICLE DENSITY, GM/CC:	1.00
PMV)	MOISTURE % BY VOLUME:	2.0	VCF)	VISCOSITY CORR. FACTOR:	1.002
DCF)	DENSITY CORR. FACTOR:	1.000	MD)	MOL WT, DRY LB/LB-MOLE:	28.84
	ISOKINETICS, %	104.4		CONCENT., GR/DSCF:	1.9859

STAGE NO.	- PARTICLE DIAMETER (microns) - FROM GRAPH	AERODYNAMIC	CATCH WEIGHT (µg)	PERCENT OF TOTAL (%)	CUM. % LESS THAN GIVEN DIA
PreSep	11.66	11.68	9,320.00	91.4	8.6
0	13.23	13.26	164.00	1.6	7.0
1	8.28	8.30	48.50	0.5	6.5
2	5.54	5.55	320.00	3.1	3.4
3	3.83	3.84	230.00	2.3	1.1
4	2.42	2.42	76.20	0.7	0.4
5	1.24	1.24	21.50	0.2	0.2
6	0.76	0.76	9.90	0.1	0.1
7	0.52	0.52	7.90	0.1	0.0
FILTER	< 0.52	< 0.52	0.00	0.0	

TOTAL CATCH 10,198.00

DENSITY = 1.0 GM/CM^3

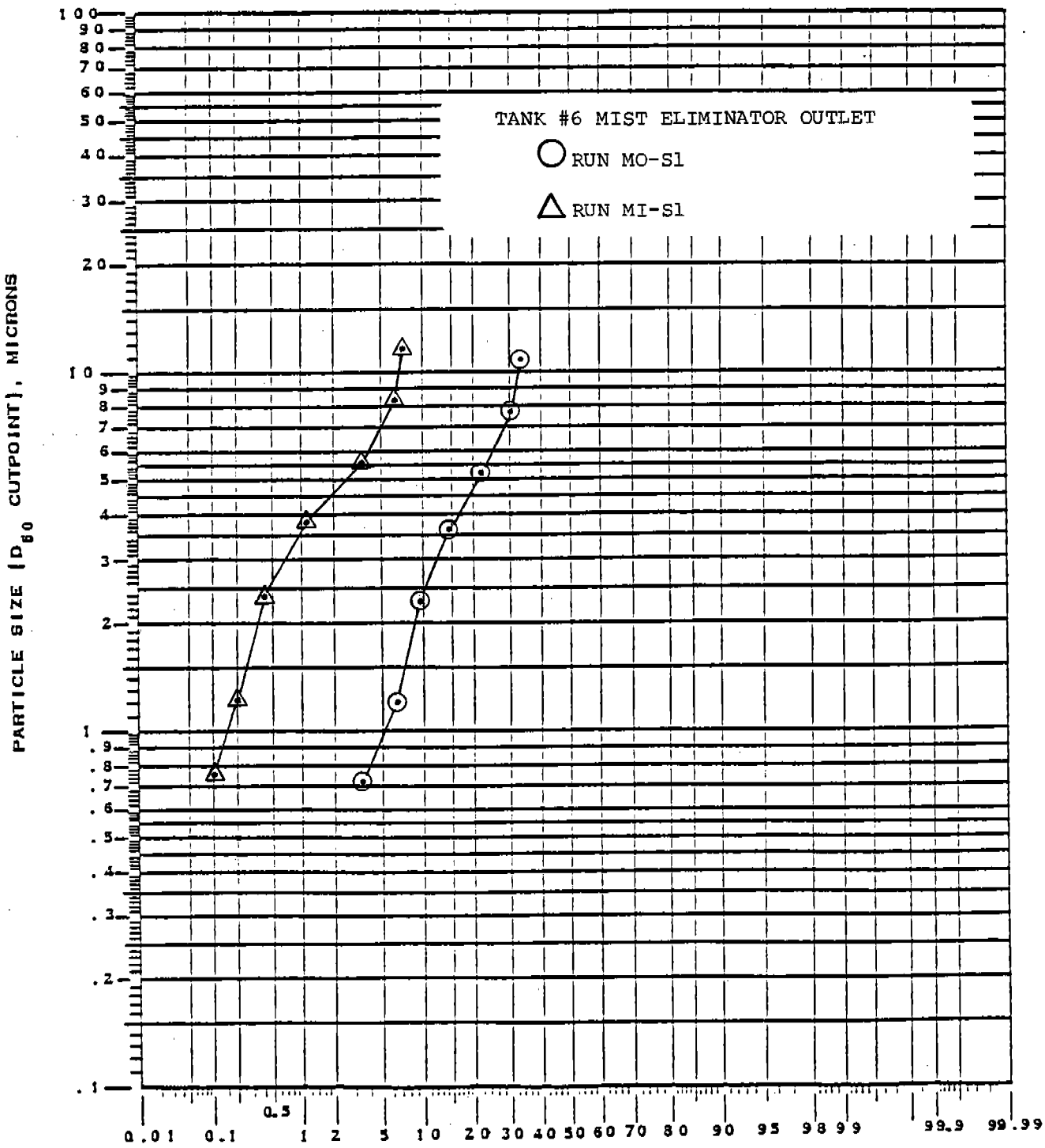

TANK #6 MIST ELIMINATOR OUTLET PARTICLE SIZE DISTRIBUTION

PARTICLE SIZING FIELD DATA & RESULTS TABULATION

RUN MO-S2

PLANT: Greensboro Industrial Platers, Greensboro, North Carolina

SAMPLING LOCATION: Tank #6 Mist Eliminator Outlet DATE: 032586

	START-FINISH TIME:	0832-1339		VOLUME METERED, ACF:	143.029
SR)	SAMPLING RATE, ACFM	0.606		NOZZLE DIA., INCHES:	0.126
ST)	SAMPLING TIME, MINUTES:	240.00	Y)	METER CAL. FACTOR:	0.993
PB)	BARO. PRESS.,IN.HG.:	29.50	TM)	METER TEMP., DEG F:	73
PSI)	STATIC PRESS., IN. H2O:	-1.73	DH)	DELTA H AVG., IN. H2O:	1.07
TS)	STACK GAS TEMP., DEG F:	71	DEN)	PARTICLE DENSITY, GM/CC:	1.00
PMV)	MOISTURE % BY VOLUME:	2.0	VCF)	VISCOSITY CORR. FACTOR:	1.000
DCF)	DENSITY CORR. FACTOR:	1.000	MD)	MOL WT, DRY LB/LB-MOLE:	28.84
	ISOKINETICS, %	101.3		CONCENT., GR/DSCF:	0.0646

STAGE NO.	- PARTICLE DIAMETER (microns) - FROM GRAPH	AERODYNAMIC	CATCH WEIGHT (µg)	PERCENT OF TOTAL (%)	CUM. % LESS THAN GIVEN DIA
PreSep	10.90	10.90	397.00	68.2	31.6
0	12.39	12.39	14.90	2.6	29.0
1	7.76	7.76	18.30	3.1	25.9
2	5.19	5.19	38.50	6.6	19.3
3	3.59	3.59	41.50	7.1	12.2
4	2.27	2.27	30.40	5.2	7.0
5	1.16	1.16	14.20	2.4	4.6
6	0.71	0.71	15.30	2.6	2.0
7	0.48	0.48	11.80	2.0	0.0
FILTER	< 0.48	< 0.48	0.20	0.0	

TOTAL CATCH 582.10

PARTICLE SIZING FIELD DATA & RESULTS TABULATION

RUN MI-S2

PLANT: Greensboro Industrial Platers, Greensboro, North Carolina

SAMPLING LOCATION: Tank #6 Mist Eliminator Inlet DATE: 032586

	START-FINISH TIME:	0832-1206		VOLUME METERED, ACF:	97.160
SR)	SAMPLING RATE, ACFM	0.545		NOZZLE DIA., INCHES:	0.190
ST)	SAMPLING TIME, MINUTES:	180.00	Y)	METER CAL. FACTOR:	1.000
PB)	BARO. PRESS.,IN.HG.:	29.50	TM)	METER TEMP., DEG F:	73
PSI)	STATIC PRESS., IN. H2O:	-1.33	DH)	DELTA H AVG., IN. H2O:	0.83
TS)	STACK GAS TEMP., DEG F:	65	DEN)	PARTICLE DENSITY, GM/CC:	1.00
PMV)	MOISTURE % BY VOLUME:	2.0	VCF)	VISCOSITY CORR. FACTOR:	0.996
DCF)	DENSITY CORR. FACTOR:	1.000	MD)	MOL WT, DRY LB/LB-MOLE:	28.84
	ISOKINETICS, %	104.9		CONCENT., GR/DSCF:	0.6080

STAGE NO.	- PARTICLE DIAMETER - (microns) FROM GRAPH	AERODYNAMIC	CATCH WEIGHT (µg)	PERCENT OF TOTAL (%)	CUM. % LESS THAN GIVEN DIA
PreSep	11.52	11.47	2,780.00	74.2	25.9
0	13.08	13.03	43.10	1.2	24.7
1	8.18	8.15	129.80	3.5	21.2
2	5.48	5.46	372.00	9.9	11.3
3	3.79	3.77	270.00	7.2	4.1
4	2.39	2.38	85.40	2.3	1.8
5	1.23	1.23	30.40	0.8	1.0
6	0.75	0.75	18.10	0.5	0.5
7	0.51	0.51	13.60	0.4	0.1
FILTER	< 0.51	< 0.51	2.40	0.1	
		TOTAL CATCH	3,744.80		

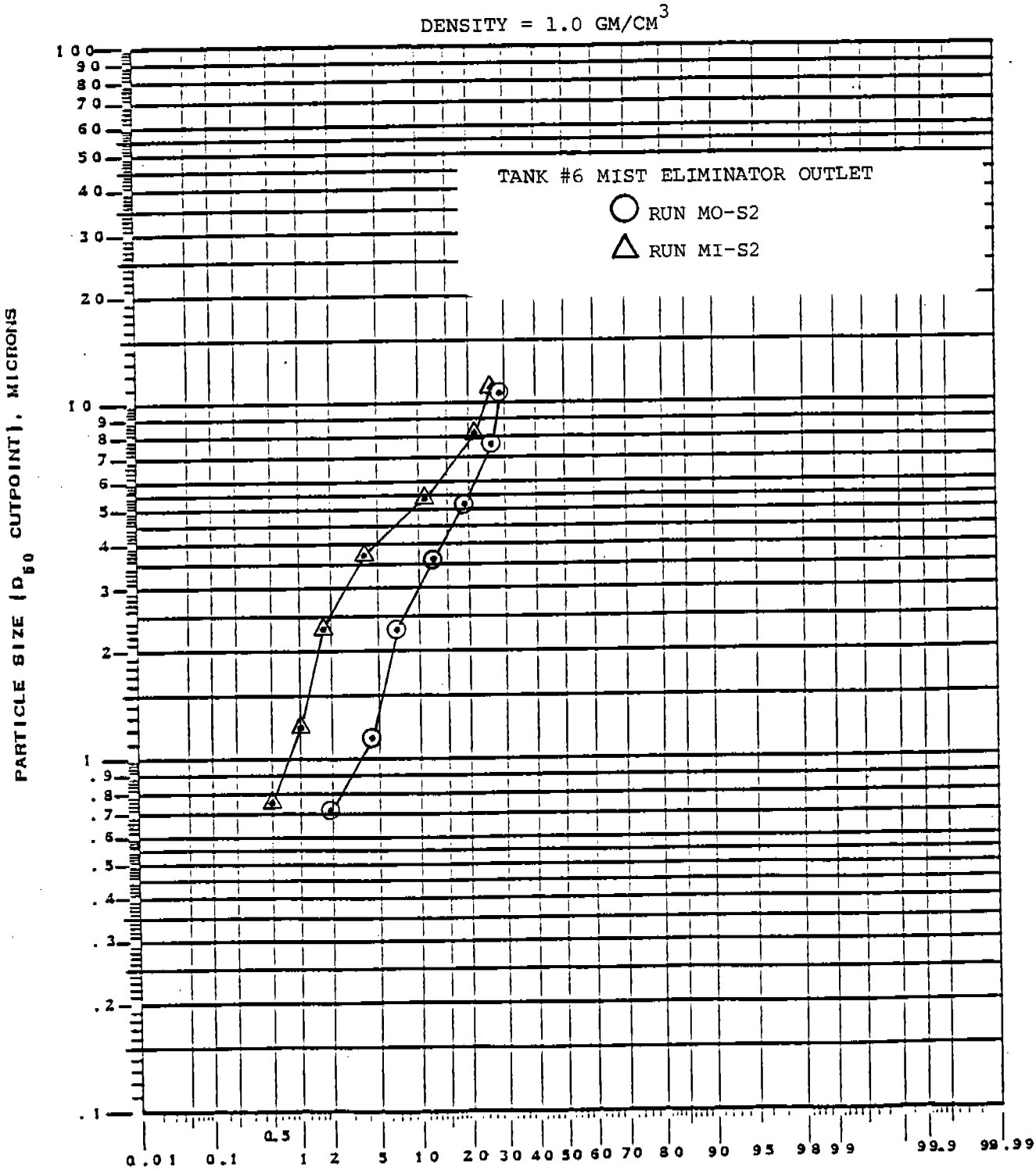

TANK #6 MIST ELIMINATOR OUTLET PARTICLE SIZE DISTRIBUTION

PARTICLE SIZING FIELD DATA & RESULTS TABULATION

RUN MO-S3

PLANT: Greensboro Industrial Platers, Greensboro, North Carolina

SAMPLING LOCATION: Tank #6 Mist Eliminator Outlet DATE: 032586

	START-FINISH TIME:	1420-1632		VOLUME METERED, ACF:	73.203
SR)	SAMPLING RATE, ACFM	0.606		NOZZLE DIA., INCHES:	0.126
ST)	SAMPLING TIME, MINUTES:	123.00	Y)	METER CAL. FACTOR:	0.993
PB)	BARO. PRESS.,IN.HG.:	29.50	TM)	METER TEMP., DEG F:	79
PSI)	STATIC PRESS., IN. H2O:	-1.73	DH)	DELTA H AVG., IN. H2O:	1.07
TS)	STACK GAS TEMP., DEG F:	78	DEN)	PARTICLE DENSITY, GM/CC:	1.00
PMV)	MOISTURE % BY VOLUME:	2.0	VCF)	VISCOSITY CORR. FACTOR:	1.005
DCF)	DENSITY CORR. FACTOR:	1.000	MD)	MOL WT, DRY LB/LB-MOLE:	28.84
	ISOKINETICS, %	101.2		CONCENT., GR/DSCF:	0.0641

STAGE NO.	- PARTICLE DIAMETER - (microns) FROM GRAPH	AERODYNAMIC	CATCH WEIGHT (µg)	PERCENT OF TOTAL (%)	CUM. % LESS THAN GIVEN DIA
PreSep	10.90	10.95	141.00	48.3	51.8
0	12.39	12.45	5.50	1.9	49.9
1	7.76	7.80	17.00	5.8	44.1
2	5.19	5.22	38.90	13.3	30.8
3	3.59	3.61	30.70	10.5	20.3
4	2.27	2.28	25.40	8.7	11.6
5	1.16	1.17	15.70	5.4	6.2
6	0.71	0.71	9.50	3.3	2.9
7	0.48	0.48	8.50	2.9	0.0
FILTER	< 0.48	< 0.48	0.00	0.0	
		TOTAL CATCH	292.20		

PARTICLE SIZING FIELD DATA & RESULTS TABULATION

RUN MI-S3

PLANT: Greensboro Industrial Platers, Greensboro, North Carolina

SAMPLING LOCATION: Tank #6 Mist Eliminator Inlet DATE: 032586

	START-FINISH TIME:	1419-1638		VOLUME METERED, ACF:	65.101
SR)	SAMPLING RATE, ACFM	0.535		NOZZLE DIA., INCHES:	0.190
ST)	SAMPLING TIME, MINUTES:	123.00	Y)	METER CAL. FACTOR:	1.000
PB)	BARO. PRESS.,IN.HG.:	29.50	TM)	METER TEMP., DEG F:	81
PSI)	STATIC PRESS., IN. H2O:	-1.35	DH)	DELTA H AVG., IN. H2O:	0.81
TS)	STACK GAS TEMP., DEG F:	73	DEN)	PARTICLE DENSITY, GM/CC:	1.00
PMV)	MOISTURE % BY VOLUME:	2.0	VCF)	VISCOSITY CORR. FACTOR:	1.002
DCF)	DENSITY CORR. FACTOR:	1.000	MD)	MOL WT, DRY LB/LB-MOLE:	28.84
	ISOKINETICS, %	101.6		CONCENT., GR/DSCF:	0.6955

STAGE NO.	- PARTICLE DIAMETER (microns) - FROM GRAPH	AERODYNAMIC	CATCH WEIGHT (µg)	PERCENT OF TOTAL (%)	CUM. % LESS THAN GIVEN DIA
PreSep	11.63	11.65	2,040.00	72.1	27.9
0	13.20	13.23	36.80	1.3	26.6
1	8.26	8.28	94.30	3.3	23.3
2	5.53	5.54	279.00	9.9	13.4
3	3.83	3.84	228.20	8.1	5.3
4	2.41	2.41	94.30	3.3	2.0
5	1.24	1.24	28.20	1.0	1.0
6	0.76	0.76	15.80	0.6	0.4
7	0.52	0.52	11.20	0.4	0.0
FILTER	< 0.52	< 0.52	0.00	0.0	

TOTAL CATCH 2,827.80

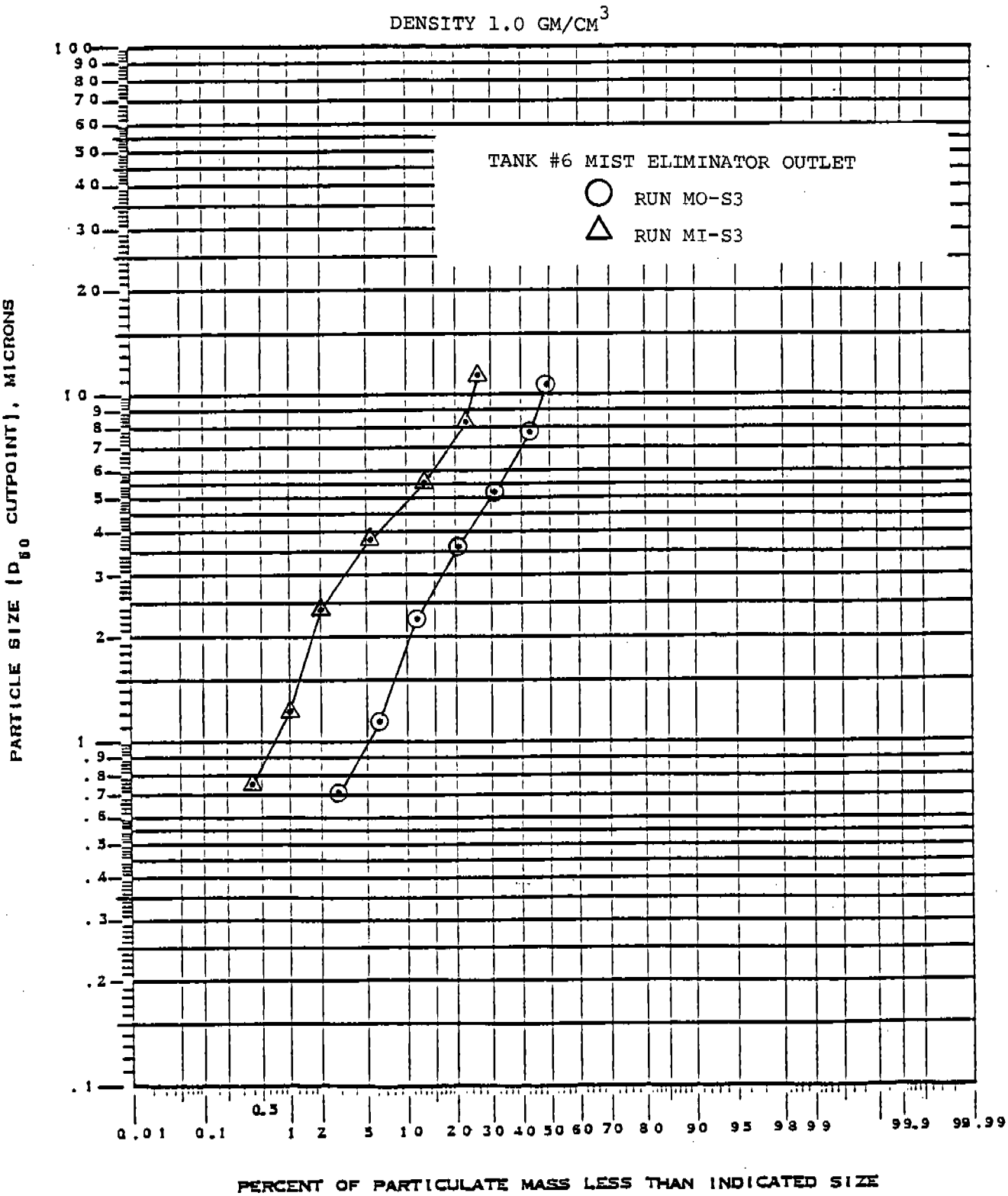

TANK #6 MIST ELIMINATOR OUTLET PARTICLE SIZE DISTRIBUTION

APPENDIX B

FIELD AND ANALYTICAL DATA

Preliminary Field Data

PLANT NAME EMB/GREENSBORO IND. PLATERS

LOCATION GREENSBORO, N.C.

SAMPLING LOCATION TANK EXHAUST DUCT #5

DUCT DEPTH
FROM INSIDE FAR WALL TO OUTSIDE OF PORT 11½"

NIPPLE LENGTH —

DEPTH OF DUCT 11½"

WIDTH (RECTANGULAR DUCT) —

EQUIVALENT DIAMETER:

$$D_E = \frac{2 \times \text{DEPTH} \times \text{WIDTH}}{\text{DEPTH} + \text{WIDTH}} = \frac{2(\quad)(\quad)}{(\quad + \quad)} = \_\_\_\_$$

DISTANCE FROM PORTS TO NEAREST FLOW DISTURBANCE:	UPSTREAM	DOWNSTREAM
FEET	2.5	1.17
STACK DIAMETERS	2.6	1.2

STACK AREA = $\pi(5.75)^2$ = 103.9 IN^2

(A PORT)

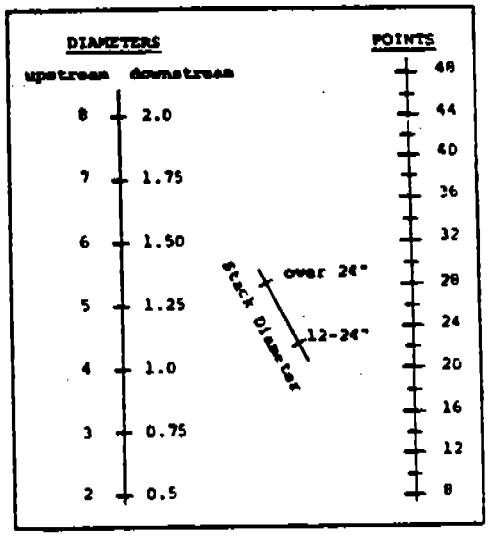

Point	% OF DIAMETER	DISTANCE FROM INSIDE WALL	DISTANCE FROM OUTSIDE OF PORT
1	3.2		1"
2	10.5		1¼"
3	19.4		2¼"
4	32.3		3¾"
5	67.7		7¾"
6	80.6		9¼"
7	89.5		10¼
8	96.8		10½"
9			
10			
11			
12			
13			
14			
15			
16			
17			
18			
19			
20			
21			
22			
23			
24			

LOCATION OF TRAVERSE POINTS IN CIRCULAR STACKS

	4	6	8	10	12	14	16	18	20	22	24
1	6.7	4.4	3.2	2.6	2.1	1.8	1.6	1.4	1.3	1.1	1.1
2	25.0	14.6	10.5	8.2	6.7	5.7	4.9	4.4	3.9	3.5	3.2
3	75.0	29.6	19.4	14.6	11.8	9.9	8.5	7.5	6.7	6.0	5.5
4	93.3	70.4	32.3	22.6	17.7	14.6	12.5	10.9	9.7	8.7	7.9
5		85.4	67.7	34.2	25.0	20.1	16.9	14.6	12.9	11.6	10.5
6		95.6	80.6	65.8	35.6	26.9	22.0	18.8	16.5	14.6	13.2
7			89.5	77.4	64.4	36.6	28.3	23.6	20.4	18.0	16.1
8			96.8	85.4	75.0	63.4	37.5	29.6	25.0	21.8	19.4
9				91.8	82.3	73.1	62.5	38.2	30.6	26.2	23.0
10				97.4	88.2	79.9	71.7	61.8	38.8	31.5	27.2
11					93.3	85.4	78.0	70.4	61.2	39.3	32.3
12					97.9	90.1	83.1	76.4	69.4	60.7	39.8
13						94.3	87.5	81.2	75.0	68.5	60.2
14						98.2	91.5	85.4	79.6	73.8	67.7
15							95.1	89.1	83.5	78.2	72.8
16							98.4	92.5	87.1	82.0	77.0
17								95.6	90.3	85.4	80.6
18								98.6	93.3	88.4	83.9
19									96.1	91.3	86.8
20									98.7	94.0	89.5
21										96.5	92.1
22										98.9	94.5
23											96.8
24											98.9

LOCATION OF TRAVERSE POINTS IN RECTANGULAR STACKS

	2	3	4	5	6	7	8	9	10	11	12
1	25.0	16.7	12.5	10.0	8.3	7.1	6.3	5.6	5.0	4.5	4.2
2	75.0	50.0	37.5	30.0	25.0	21.4	18.8	16.7	15.0	13.6	12.5
3		83.3	62.5	50.0	41.7	35.7	31.3	27.8	25.0	22.7	20.8
4			87.5	70.0	58.3	50.0	43.8	38.9	35.0	31.8	29.2
5				90.0	75.0	64.3	56.3	50.0	45.0	40.9	37.5
6					91.7	78.6	68.8	61.1	55.0	50.0	45.8
7						92.9	81.3	72.2	65.0	59.1	54.2
8							93.8	83.3	75.0	68.2	62.5
9								94.4	85.0	77.3	70.8
10									95.0	86.4	79.2
11										95.5	87.5
12											95.8

ENTROPY ENVIRONMENTALISTS, INC.

PARTICULATE FIELD DATA

COMPANY NAME: EMB / Greensboro Industrial Platers
RUN NUMBER: TE-1A
ADDRESS: Greensboro NC
TIME START: 0915
SAMPLING LOCATION: Coating Tank #6 - Exhaust
TIME FINISH: 1021
DATE: 03.18.86
TEAM LEADER: B. Rabo
TECHNICIANS: —
BAROMETRIC PRESSURE, IN. HG: 29.2
STATIC PRESSURE, IN. H_2O: -0.75
SAMPLING TRAIN LEAK TEST VACUUM, IN. HG: 15 8
SAMPLING TRAIN LEAK RATE, CU. FT./MIN.: 0.016 0.002

EQUIPMENT CHECKS

- ✓ PITOTS, PRE-TEST
- ✓ PITOTS, POST-TEST
- N/A ORSAT SAMPLING SYSTEM
- N/A TEDLAR BAG
- ✓ THERMOCOUPLE @ 65 °F

IDENTIFICATION NUMBERS

REAGENT BOX	02	NOZZLE	508 DIAMETER 0.363
METER BOX	N-5	T/C READOUT	25
UMBILICAL	A	T/C PROBE	4.1
SAMPLE BOX	11	ORSAT PUMP	N/A
PROBE	2-3	TEDLAR BAG	N/A

FILTER #	TARE
N/A	N/A

NOMOGRAPH SET-UP

NOMOGRAPH # BFR

ΔH@	1.82	C FACTOR	1.08
METER TEMP	85	STACK TEMP	65
% MOISTURE	2	REF. ΔP	0.17
		K:	0.01882 35

SAMPLE POINT	CLOCK TIME, MIN.	DRY GAS METER READING, CU. FT.	PITOT READING (ΔP), IN. H_2O	ORIFICE SETTING (ΔH), IN. H_2O IDEAL	ORIFICE SETTING (ΔH), IN. H_2O ACTUAL	GAS METER TEMP. °F	PUMP VACUUM IN. HG GAUGE	FILTER BOX TEMP. °F	IMP. EXIT TEMP. °F	STACK TEMP. °F	LK. CHECK READINGS
A-4	0/0	81.662	0.175	1.89	1.89	81	6	118	64	66	
"	10	89.11	0.131	1.42	1.42	87	5	124	62	67	
"	20	95.86	0.132	1.43	1.43	88	5	124	64	67	
B-5	30	102.398	0.204	2.21	2.21	88	6	127	66	68	
"	40	110.46	0.206	2.23	2.23	89	6	130	66	68	
"	50	118.57	0.213	2.31	2.31	90	6	128	66	67	
	60/OFF	126.783									

V_M $(\sqrt{\Delta P})^2$ ΔH B-4 T_M T_S

ENTROPY

PARTICULATE FIELD DATA

COMPANY NAME: EMB / GREENSBORO INDUSTRIAL PLATERS — RUN NUMBER: TE-1B
ADDRESS: GREENSBORO, NC — TIME START: 0915
SAMPLING LOCATION: COATING TANK # 5 - EXHAUST — TIME FINISH: 1022
DATE: 03.18.86 — TEAM LEADER: ____ — TECHNICIANS: -0.75
BAROMETRIC PRESSURE, IN. HG: 29.2 — STATIC PRESSURE, IN. H_2O: -
SAMPLING TRAIN LEAK TEST VACUUM, IN. HG: 25 8
SAMPLING TRAIN LEAK RATE, CU. FT./MIN.: 0.006 0.016

EQUIPMENT CHECKS

- ✓ PITOTS, PRE-TEST
- ✓ PITOTS, POST-TEST
- N/A ORSAT SAMPLING SYSTEM
- N/A TEDLAR BAG
- ✓ THERMOCOUPLE @ 65 °F

IDENTIFICATION NUMBERS

REAGENT BOX: 02 — NOZZLE: 509 — DIAMETER: 0.312
METER BOX: N.10 — T/C READOUT: 0009
UMBILICAL: B — T/C PROBE: 4.10
SAMPLE BOX: 13 — ORSAT PUMP: N/A
PROBE: 2.2 — TEDLAR BAG: N/A

FILTER #	TARE
N/A	N/A

NOMOGRAPH SET-UP — NOMOGRAPH #: BFR

$\Delta H_@$: 1.63 — C FACTOR: 0.96
METER TEMP: 85 — STACK TEMP: 65
% MOISTURE: 2 — REF. ΔP: 0.19
K = 0.0096842

SAMPLE POINT	CLOCK TIME, MIN.	DRY GAS METER READING, CU. FT.	PITOT READING (ΔP), IN. H_2O	ORIFICE SETTING (ΔH), IN. H_2O IDEAL	ORIFICE SETTING (ΔH), IN. H_2O ACTUAL	GAS METER TEMP. °F	PUMP VACUUM IN. HG GAUGE	FILTER BOX TEMP. °F	IMP. EXIT TEMP. °F	STACK TEMP. °F	LK. CHECK READINGS
B.5	0/0	327.000	0.175	1.69	1.69	73	5	121	66	67	
"	10	334.54	0.217	2.10	2.10	74	6	120	67	68	
"	20	342.68	0.224	2.17	2.17	76	6	122	66	67	
A.4	30	357.132	0.155	1.50	1.50	76	5	122	65	68	
"	40	358.41	0.156	1.51	1.51	78	5	126	65	68	
"	50	365.67	0.157	1.52	1.52	81	5	128	66	67	
	60/OFF	372.883									

V_M — $(\sqrt{\Delta P})^2$ — ΔH B-5 T_M — T_S

ENTROPY

PARTICULATE FIELD DATA

COMPANY NAME: Greensboro Industrial Platers / EMB — RUN NUMBER: TE-2A
ADDRESS: Greensboro, NC — TIME START: 1253
SAMPLING LOCATION: #5 Coating Tank Exhaust — TIME FINISH: 1400
DATE: 03-18-86 — TEAM LEADER: B. Rudo — TECHNICIANS: —
BAROMETRIC PRESSURE, IN. HG: 29.2 — STATIC PRESSURE, IN. H_2O: -0.75
SAMPLING TRAIN LEAK TEST VACUUM, IN. HG: 15 / 10
SAMPLING TRAIN LEAK RATE, CU. FT./MIN.: 0.009 / 0.006

EQUIPMENT CHECKS

- ✓ PITOTS, PRE-TEST
- ___ PITOTS, POST-TEST
- N/A ORSAT SAMPLING SYSTEM
- N/A TEDLAR BAG
- ✓ THERMOCOUPLE @ 65 °F

IDENTIFICATION NUMBERS

REAGENT BOX: 0231 — NOZZLE: 507 — DIAMETER: 0.304
METER BOX: N-5 — T/C READOUT: 0009
UMBILICAL: A — T/C PROBE: 4-3
SAMPLE BOX: 24 — ORSAT PUMP: N/A
PROBE: 2-4 — TEDLAR BAG: N/A

FILTER #	TARE
N/A	N/A

NOMOGRAPH SET-UP — NOMOGRAPH #: BFR

$\Delta H_@$: 1.82 — C FACTOR: 1.09
METER TEMP: 90 — STACK TEMP: 70
% MOISTURE: 2 — REF. ΔP: 0.191
K = 0.0096335

SAMPLE POINT	CLOCK TIME, MIN.	DRY GAS METER READING, CU. FT.	PITOT READING (ΔP), IN. H_2O	ORIFICE SETTING (ΔH), IN. H_2O IDEAL	ACTUAL	GAS METER TEMP. °F	PUMP VACUUM IN. HG GAUGE	FILTER BOX TEMP. °F	IMP. EXIT TEMP. °F	STACK TEMP. °F	LK. CHECK READINGS
A-4	0/0	126.933	0.156	1.50	1.50	70	6	121	67	71	
"	10	133.67	0.158	1.52	1.52	73	6	127	66	71	
"	20	140.28	0.158	1.52	1.52	77	6	125	66	71	
B-5	30/30	147.019	0.208	2.00	2.00	82	8	125	65	70	
"	40	154.72	0.210	2.02	2.02	87	8	125	62	70	
"	50	162.52	0.210	2.02	2.02	90	8	125	64	70	
	60/OFF	170.451									
		41.294			1.76	80				71	
						√ΔP [illegible]	9.836				

V_M — $(\sqrt{\Delta P})^2$ — ΔH — T_M — T_S

ENTROPY

PARTICULATE FIELD DATA

COMPANY NAME EMB / GREENSBORO INDUSTRIAL PLATERS — RUN NUMBER TE-2B
ADDRESS GREENSBORO, NC — TIME START 1254
SAMPLING LOCATION #5 COATING TANK EXHAUST — TIME FINISH 1402
DATE 03.18.86 — TEAM LEADER B. RYAN — TECHNICIANS —
BAROMETRIC PRESSURE, IN. HG 29.2 — STATIC PRESSURE, IN. H_2O -0.75
SAMPLING TRAIN LEAK TEST VACUUM, IN. HG 15 10
SAMPLING TRAIN LEAK RATE, CU. FT./MIN. 0.006 0.000

EQUIPMENT CHECKS

- ✓ PITOTS, PRE-TEST
- ___ PITOTS, POST-TEST
- N/A ORSAT SAMPLING SYSTEM
- N/A TEDLAR BAG
- ✓ THERMOCOUPLE @ 65 °F

IDENTIFICATION NUMBERS

REAGENT BOX D237 NOZZLE 108 DIAMETER 0.301
METER BOX N.10 T/C READOUT 25
UMBILICAL B T/C PROBE 511
SAMPLE BOX 5 ORSAT PUMP N/A
PROBE 2.1 TEDLAR BAG N/A

FILTER #	TARE
N/A	N/A

NOMOGRAPH SET-UP — NOMOGRAPH # BER

ΔH@ 1.63 — C FACTOR 0.96
METER TEMP 80 — STACK TEMP 70
% MOISTURE 2 — REF. ΔP 0.220
K= 0.008363636

SAMPLE POINT	CLOCK TIME, MIN.	DRY GAS METER READING, CU. FT.	PITOT READING (ΔP), IN. H_2O	ORIFICE SETTING (ΔH), IN. H_2O IDEAL	ORIFICE SETTING (ΔH), IN. H_2O ACTUAL	GAS METER TEMP. °F	PUMP VACUUM IN. HG GAUGE	FILTER BOX TEMP. °F	IMP. EXIT TEMP. °F	STACK TEMP. °F	LK. CHECK READINGS
B.5	0/0	373.602	0.196	1.89	1.89	65	8	128	63	71	
"	10	380.98	0.193	1.61	1.61	69	8	129	65	71	
"	20	388.18	0.192	1.61	1.61	73	8	130	66	71	
A.4	30/0	395.648	0.167	1.40	1.40	78	7	127	65	70	
"	40	402.61	0.162	1.35	1.35	82	7	127	62	70	
"	50	409.42	0.162	1.35	1.35	85	7	125	63	70	
	60/OFF	416.327									
		43.225			1.54	75				71	
					0.72						

V_M — $(\sqrt{\Delta P})^2$ — ΔH — T_M — T_S

ENTROPY

PARTICULATE FIELD DATA

COMPANY NAME EMB/GREENSBORO IND. PLATERS
ADDRESS GREENSBORO, N.C.
SAMPLING LOCATION COATING TANK #5 - EXHAUST
DATE 3-18-86 TEAM LEADER DR TECHNICIANS —
BAROMETRIC PRESSURE, IN. HG 29.20 STATIC PRESSURE, IN. H_2O -0.73
SAMPLING TRAIN LEAK TEST VACUUM, IN. HG 15 7
SAMPLING TRAIN LEAK RATE, CU. FT./MIN. 0.010 0.005

RUN NUMBER TE-3A
TIME START 1429
TIME FINISH 1533

EQUIPMENT CHECKS

✓ PITOTS, PRE-TEST
✓ PITOTS, POST-TEST
NA ORSAT SAMPLING SYSTEM
NA TEDLAR BAG
✓ THERMOCOUPLE @ 70 °F

IDENTIFICATION NUMBERS

REAGENT BOX D231 NOZZLE 508 DIAMETER 0.313
METER BOX N-5 T/C READOUT 25
UMBILICAL A T/C PROBE 4-1
SAMPLE BOX 11 ORSAT PUMP NA
PROBE 2-3 TEDLAR BAG NA

FILTER #	TARE
N/A	N/A

NOMOGRAPH SET-UP NOMOGRAPH # DR

$\Delta H_@$ 1.82 C FACTOR 1.07 → 1.10
METER TEMP 90 → 100 STACK TEMP 70
% MOISTURE 2 REF. ΔP 0.172 → 0.168

SAMPLE POINT	CLOCK TIME, MIN.	DRY GAS METER READING, CU. FT.	PITOT READING (ΔP), IN. H_2O	ORIFICE SETTING (ΔH), IN. H_2O IDEAL	ORIFICE SETTING (ΔH), IN. H_2O ACTUAL	GAS METER TEMP. °F	PUMP VACUUM IN. HG GAUGE	FILTER BOX TEMP. °F	IMP. EXIT TEMP. °F	STACK TEMP. °F	LK. CHECK READINGS
A-4	0/0	170.642	0.170	1.82	1.82	92	6	120	66	72	
	10	178.01	0.167	1.78	1.78	97	6	117	63	77	
	20	185.29	0.167	1.83	1.83	98	6	118	63	71	NOMO.
B-5	30/0	192.837	0.218	2.39	2.39	96	7	120	65	72	
	10	201.28	0.222	2.43	2.43	100	7	120	61	72	
	20	209.87	0.217	2.38	2.38	102	7	117	62	71	
	60/OFF	218.448									
		27.806			2.11	99				72	

V_M $(\sqrt{\Delta P})^2$ ΔH T_M T_S

ENTROPY

PARTICULATE FIELD DATA

COMPANY NAME EMB/GREENSBORO IND. PLATERS — RUN NUMBER TE-3B
ADDRESS GREENSBORO, N.C. — TIME START 1430
SAMPLING LOCATION COATING TANK #5 - EXHAUST — TIME FINISH 1534
DATE 3-18-86 — TEAM LEADER DR — TECHNICIANS —
BAROMETRIC PRESSURE, IN. HG 29.20 — STATIC PRESSURE, IN. H_2O -0.59
SAMPLING TRAIN LEAK TEST VACUUM, IN. HG 10 7
SAMPLING TRAIN LEAK RATE, CU. FT./MIN. 0.019 0.090

EQUIPMENT CHECKS

- ✓ PITOTS, PRE-TEST
- ✓ PITOTS, POST-TEST
- NA ORSAT SAMPLING SYSTEM
- NA TEDLAR BAG
- ✓ THERMOCOUPLE @ 72 °F

IDENTIFICATION NUMBERS

REAGENT BOX 0231 — NOZZLE 509 — DIAMETER .312
METER BOX N-10 — T/C READOUT 0009
UMBILICAL B — T/C PROBE 4-10
SAMPLE BOX 13 — ORSAT PUMP NA
PROBE 2-2 — TEDLAR BAG

FILTER #	TARE
N/A	N/A

NOMOGRAPH SET-UP — NOMOGRAPH # DR

$\Delta H_@$ 1.63 — C FACTOR 0.95
METER TEMP 90 — STACK TEMP 70
% MOISTURE 02 — REF. ΔP 0.182

SAMPLE POINT	CLOCK TIME, MIN.	DRY GAS METER READING, CU. FT.	PITOT READING (ΔP), IN. H_2O	ORIFICE SETTING (ΔH), IN. H_2O IDEAL	ORIFICE SETTING (ΔH), IN. H_2O ACTUAL	GAS METER TEMP. °F	PUMP VACUUM IN. HG GAUGE	FILTER BOX TEMP. °F	IMP. EXIT TEMP. °F	STACK TEMP. °F	LK. CHECK READINGS
B-5	0/0	416.608	0.232	2.35	2.35	88	7	125	66	72	
	10	425.60	0.227	2.29	2.29	91	7	125	62	72	
	20	424.42	0.232	2.35	2.35	93	7	122	62	71	
A-4	30/0	443.52	0.154	1.55	1.55	90	5	120	65	72	
	10	450.88	0.154	1.55	1.55	91	5	120	62	72	
	20	458.24	0.153	1.55	1.55	91	5	120	64	71	
	60/OFF	465.660									
		43.652			1.94	91				[illegible]	

V_M — $(\sqrt{\Delta P})^2$ — ΔH B-9 T_M — T_S

ENTROPY

PARTICULATE FIELD DATA

COMPANY NAME EMB/GREENSBORO IND. PLATERS — RUN NUMBER TE-4A
ADDRESS GREENSBORO, N.C. — TIME START 0924
SAMPLING LOCATION COATING TANK #5 - EXHAUST — TIME FINISH 1031
DATE 3-19-86 — TEAM LEADER DR — TECHNICIANS —
BAROMETRIC PRESSURE, IN. HG 29.20 — STATIC PRESSURE, IN. H_2O -0.73
SAMPLING TRAIN LEAK TEST VACUUM, IN. HG 10 7
SAMPLING TRAIN LEAK RATE, CU. FT./MIN. 0.000 0.003

EQUIPMENT CHECKS

- ✓ PITOTS, PRE-TEST
- ✓ PITOTS, POST-TEST
- N/A ORSAT SAMPLING SYSTEM
- N/A TEDLAR BAG
- ✓ THERMOCOUPLE @ 70 °F

IDENTIFICATION NUMBERS

REAGENT BOX 0219 NOZZLE 507 DIAMETER .304
METER BOX N-5 T/C READOUT 0009
UMBILICAL A T/C PROBE 4-3
SAMPLE BOX 24 ORSAT PUMP N/A
PROBE 2-4 TEDLAR BAG N/A

FILTER #	TARE
N/A	N/A

NOMOGRAPH SET-UP — NOMOGRAPH # DR

$\Delta H_@$ 1.82 — C FACTOR 1.07
METER TEMP 85 — STACK TEMP 70
% MOISTURE 2 — REF. ΔP .193

SAMPLE POINT	CLOCK TIME, MIN.	DRY GAS METER READING, CU. FT.	PITOT READING (ΔP), IN. H_2O	ORIFICE SETTING (ΔH), IN. H_2O IDEAL	ORIFICE SETTING (ΔH), IN. H_2O ACTUAL	GAS METER TEMP. °F	PUMP VACUUM IN. HG GAUGE	FILTER BOX TEMP. °F	IMP. EXIT TEMP. °F	STACK TEMP. °F	LK. CHECK READINGS
A-4	0/0	218.623	0.162	1.54	1.54	78	6	120	65	72	
	10	225.34	0.163	1.55	1.55	79	6	120	62	72	
	20	232.16	0.163	1.55	1.55	81	6	122	63	72	
B-5	30/0	239.013	0.197	1.88	1.88	82	7	125	65	72	
	10	246.49	0.197	1.88	1.88	85	7	125	62	71	
	20	254.04	0.197	1.88	1.88	87	7	125	62	72	
	60/OFF	261.610									
										72	
		42.987			1.71	82					
					$\sqrt{\frac{\Delta H}{1.5}(T_m+460)}$	= 9.7684					

V_M — $(\sqrt{\Delta P})^2$ — ΔH — T_M — T_S

ENTROPY

PARTICULATE FIELD DATA

COMPANY NAME EMB/GREENSBORO IND. PAINTERS — RUN NUMBER TE-4B
ADDRESS GREENSBORO, N.C. — TIME START 0926
SAMPLING LOCATION COATING TANK #5 - EXHAUST — TIME FINISH 1032
DATE 3-19-86 — TEAM LEADER DR — TECHNICIANS —
BAROMETRIC PRESSURE, IN. HG 29.20 — STATIC PRESSURE, IN. H_2O -0.73
SAMPLING TRAIN LEAK TEST VACUUM, IN. HG 10 11
SAMPLING TRAIN LEAK RATE, CU. FT./MIN. 0.000 0.020

EQUIPMENT CHECKS

- ✓ PITOTS, PRE-TEST
- ✓ PITOTS, POST-TEST
- NA ORSAT SAMPLING SYSTEM
- NA TEDLAR BAG
- ✓ THERMOCOUPLE @ 70 °F

IDENTIFICATION NUMBERS

REAGENT BOX 0234 — NOZZLE 108 — DIAMETER .301
METER BOX N-10 — T/C READOUT 0025
UMBILICAL B — T/C PROBE 5-11
SAMPLE BOX 5 — ORSAT PUMP N/A
PROBE 2-1 — TEDLAR BAG N/A

FILTER #	TARE
N/A	N/A

NOMOGRAPH SET-UP — NOMOGRAPH # DR

$\Delta H_@$ 1.63 — C FACTOR 1.07
METER TEMP 85 — STACK TEMP 70
% MOISTURE 02 — REF. ΔP .196

SAMPLE POINT	CLOCK TIME, MIN.	DRY GAS METER READING, CU. FT.	PITOT READING (ΔP), IN. H_2O	ORIFICE SETTING (ΔH), IN. H_2O IDEAL	ACTUAL	GAS METER TEMP. °F	PUMP VACUUM IN. HG GAUGE	FILTER BOX TEMP. °F	IMP. EXIT TEMP. °F	STACK TEMP. °F	LK. CHECK READINGS
B-5	0/0	465.887	0.187	1.75	1.75	75	11	120	65	72	
	10	473.75	0.193	1.81	1.81	78	11	120	60	72	
	20	481.71	0.190	1.78	1.78	82	10	125	62	72	
A-4	30/0	489.573	0.162	1.52	1.52	82	9	125	66	72	
	10	496.94	0.157	1.47	1.47	84	9	125	64	71	
	20	504.22	0.152	1.47	1.47	85	9	125	65	72	
	60/OFF	511.424									
					1.63	81				72	
		45.537									
						9.5946 = $\sqrt{\Delta p_{ns}}$ (Ts+460)					

V_M — $(\sqrt{\Delta P})^2$ — ΔH — T_M — T_S

ENTROPY

PARTICULATE FIELD DATA

COMPANY NAME EMB/GREENSBORO/INDUSTRIAL PLATERS — RUN NUMBER TE-5A
ADDRESS GREENSBORO, N.C. — TIME START 1104
SAMPLING LOCATION COATING TANK #5-EXHAUST — TIME FINISH 1210
DATE 3-19-86 — TEAM LEADER DR — TECHNICIANS
BAROMETRIC PRESSURE, IN. HG 29.20 — STATIC PRESSURE, IN. H_2O -0.73
SAMPLING TRAIN LEAK TEST VACUUM, IN. HG 15 07
SAMPLING TRAIN LEAK RATE, CU. FT./MIN. 0.016 0.016

EQUIPMENT CHECKS

- ✓ PITOTS, PRE-TEST
- ✓ PITOTS, POST-TEST
- NA ORSAT SAMPLING SYSTEM
- NA TEDLAR BAG
- ✓ THERMOCOUPLE @ 70 °F

IDENTIFICATION NUMBERS

REAGENT BOX 0219 — NOZZLE 508 — DIAMETER .313
METER BOX N-5 — T/C READOUT 0025
UMBILICAL A — T/C PROBE 4-1
SAMPLE BOX 11 — ORSAT PUMP NA
PROBE 2-3 — TEDLAR BAG NA

FILTER #	TARE
N/A	N/A

NOMOGRAPH SET-UP — NOMOGRAPH # DR

$\Delta H_@$ 1.82 — C FACTOR 1.07
METER TEMP 85 — STACK TEMP 70
% MOISTURE 02 — REF. ΔP 0.173

SAMPLE POINT	CLOCK TIME, MIN.	DRY GAS METER READING, CU. FT.	PITOT READING (ΔP), IN. H_2O	ORIFICE SETTING (ΔH), IN. H_2O IDEAL	ORIFICE SETTING (ΔH), IN. H_2O ACTUAL	GAS METER TEMP. °F	PUMP VACUUM IN. HG GAUGE	FILTER BOX TEMP. °F	IMP. EXIT TEMP. °F	STACK TEMP. °F	LK. CHECK READINGS
A-4	0/0	261.804	0.162	1.72	1.72	86	6	117	66	72	
	10	268.96	0.171	1.82	1.82	89	6	120	62	72	
	20	276.70	0.171	1.82	1.82	90	6	121	62	71	
B-5	30/0	283.907	0.208	2.21	2.21	88	7	119	67	71	
	10	292.12	0.207	2.20	2.20	89	7	119	64	72	
	20	300.32	0.207	2.20	2.20	90	7	120	64	72	
	60/OFF	308.541									
					2.0°	89				72	
		46.737									
							9.0	24	6		

V_M — $(\sqrt{\Delta P})^2$ — ΔH — T_M — T_S

B-12

ENTROPY

PARTICULATE FIELD DATA

COMPANY NAME EMB/GREENSBORO INDUSTRIAL PLATERS — RUN NUMBER TE-5B
ADDRESS GREENSBORO, N.C. — TIME START 1105
SAMPLING LOCATION COATING TANK #5 - EXHAUST — TIME FINISH 1211
DATE 3-19-86 — TEAM LEADER DR — TECHNICIANS
BAROMETRIC PRESSURE, IN. HG 29.20 — STATIC PRESSURE, IN. H_2O -0.73
SAMPLING TRAIN LEAK TEST VACUUM, IN. HG 14 07
SAMPLING TRAIN LEAK RATE, CU. FT./MIN. 0.006 0.003

EQUIPMENT CHECKS

- ✓ PITOTS, PRE-TEST
- ✓ PITOTS, POST-TEST
- NA ORSAT SAMPLING SYSTEM
- NA TEDLAR BAG
- ✓ THERMOCOUPLE @ 70 °F

IDENTIFICATION NUMBERS

REAGENT BOX 0234 — NOZZLE 509 — DIAMETER .312
METER BOX N-10 — T/C READOUT 0009
UMBILICAL B — T/C PROBE 4-10
SAMPLE BOX 13 — ORSAT PUMP NA
PROBE 2-2 — TEDLAR BAG NA

FILTER #	TARE
N/A	N/A

NOMOGRAPH SET-UP — NOMOGRAPH # DR

$\Delta H_@$ 1.63 — C FACTOR 1.07
METER TEMP 85 — STACK TEMP 70
% MOISTURE 02 — REF. ΔP 0.174

SAMPLE POINT	CLOCK TIME, MIN.	DRY GAS METER READING, CU. FT.	PITOT READING (ΔP), IN. H_2O	ORIFICE SETTING (ΔH), IN. H_2O IDEAL	ORIFICE SETTING (ΔH), IN. H_2O ACTUAL	GAS METER TEMP. °F	PUMP VACUUM IN. HG GAUGE	FILTER BOX TEMP. °F	IMP. EXIT TEMP. °F	STACK TEMP. °F	LK. CHECK READINGS
B-5	0/0	513.293	0.225	2.38	2.38	84	7	120	66	72	
	10	522.20	0.225	2.38	2.38	86	7	120	61	72	
	20	531.37	0.227	2.40	2.40	87	7	122	63	71	
A-4	30/0	540.552	0.171	1.81	1.81	83	6	121	66	71	
	10	548.50	0.165	1.74	1.74	83	6	120	64	72	
	20	556.28	0.168	1.78	1.78	84	6	122	65	72	
	60/OFF	564.162									
					2.08	85					
		50.869					10.202			72	

V_M — $(\sqrt{\Delta P})^2$ — $\Delta H_{@}$ — T_M — T_S

B-13

ENTROPY

PARTICULATE FIELD DATA

COMPANY NAME EMB/GREENSBORO INDUSTRIAL PLATERS — RUN NUMBER TE-6A
ADDRESS GREENSBORO, N.C. — TIME START 1305
SAMPLING LOCATION COATING TANK #5 - EXHAUST — TIME FINISH 1410
DATE 3-19-86 — TEAM LEADER DR — TECHNICIANS —
BAROMETRIC PRESSURE, IN. HG 29.20 — STATIC PRESSURE, IN. H_2O -0.73
SAMPLING TRAIN LEAK TEST VACUUM, IN. HG 14 07
SAMPLING TRAIN LEAK RATE, CU. FT./MIN. 0.000 0.000

EQUIPMENT CHECKS

- ✓ PITOTS, PRE-TEST
- ✓ PITOTS, POST-TEST
- N/A ORSAT SAMPLING SYSTEM
- N/A TEDLAR BAG
- ✓ THERMOCOUPLE @ 74 °F

IDENTIFICATION NUMBERS

REAGENT BOX 0219 — NOZZLE 507 — DIAMETER .304
METER BOX N-5 — T/C READOUT 0009
UMBILICAL A — T/C PROBE 4-3
SAMPLE BOX 24 — ORSAT PUMP N/A
PROBE 2-4 — TEDLAR BAG N/A

FILTER #	TARE
N/A	N/A

NOMOGRAPH SET-UP — NOMOGRAPH # DR

$\Delta H_@$ 1.82 — C FACTOR 1.07
METER TEMP 85 — STACK TEMP 70
% MOISTURE 2 — REF. ΔP .195

SAMPLE POINT	CLOCK TIME, MIN.	DRY GAS METER READING, CU. FT.	PITOT READING (ΔP), IN. H_2O	ORIFICE SETTING (ΔH), IN. H_2O IDEAL	ORIFICE SETTING (ΔH), IN. H_2O ACTUAL	GAS METER TEMP. °F	PUMP VACUUM IN. HG GAUGE	FILTER BOX TEMP. °F	IMP. EXIT TEMP. °F	STACK TEMP. °F	LK. CHECK READINGS
A-4	0/0	308.732	0.~~162~~ 190	1.~~53~~ 79	1.79	85	7	120	66	75	
	10	316.03	0.158	1.49	1.49	89	6	120	60	75	
	20	322.77	0.158	1.49	1.49	92	6	118	61	75	
B-5	30/0	329.57	0.190	1.79	1.79	90	7	120	66	75	
	10	337.00	0.190	1.79	1.79	90	7	120	62	72	
	20	344.42	0.195	1.84	1.84	91	7	122	63	71	
	60/OFF	351.995									
					1.70	90					
		43.263									
							9.7970			74	

V_M — $(\sqrt{\Delta P})^2$ — $\Delta H_{@}$ — T_M — T_S

B-14

ENTROPY

PARTICULATE FIELD DATA

COMPANY NAME EMB/GREENSBORO INDUSTRIAL PLATERS — RUN NUMBER TE-6B
ADDRESS GREENSBORO, N.C. — TIME START 1306
SAMPLING LOCATION COATING TANK #5 - EXHAUST — TIME FINISH 1411
DATE 3-19-86 — TEAM LEADER DR — TECHNICIANS —
BAROMETRIC PRESSURE, IN. HG 29.20 — STATIC PRESSURE, IN. H_2O -0.73
SAMPLING TRAIN LEAK TEST VACUUM, IN. HG 14 11
SAMPLING TRAIN LEAK RATE, CU. FT./MIN. 0.000 0.003

EQUIPMENT CHECKS

- ✓ PITOTS, PRE-TEST
- ✓ PITOTS, POST-TEST
- N/A ORSAT SAMPLING SYSTEM
- N/A TEDLAR BAG
- ✓ THERMOCOUPLE @ 74 °F

IDENTIFICATION NUMBERS

REAGENT BOX D234 — NOZZLE 108 — DIAMETER .301
METER BOX N-10 — T/C READOUT 0025
UMBILICAL B — T/C PROBE 5-11
SAMPLE BOX 5 — ORSAT PUMP N/A
PROBE 2-1 — TEDLAR BAG N/A

FILTER #	TARE
N/A	N/A

NOMOGRAPH SET-UP — NOMOGRAPH # DR

$\Delta H_@$ 1.63 — C FACTOR 1.07
METER TEMP 85 — STACK TEMP 70
% MOISTURE 02 — REF. ΔP 0.200

SAMPLE POINT	CLOCK TIME, MIN.	DRY GAS METER READING, CU. FT.	PITOT READING (ΔP), IN. H_2O	ORIFICE SETTING (ΔH), IN. H_2O IDEAL	ORIFICE SETTING (ΔH), IN. H_2O ACTUAL	GAS METER TEMP. °F	PUMP VACUUM IN. HG GAUGE	FILTER BOX TEMP. °F	IMP. EXIT TEMP. °F	STACK TEMP. °F	LK. CHECK READINGS
B-5	0/0	564.992	0.187	1.72	1.72	84	11	118	66	75	
	10	572.71	0.180	1.66	1.66	87	10	120	61	75	
	20	580.40	0.192	1.77	1.77	89	10	120	61	75	
A-4	30/0	588.35	0.148	1.36	1.36	86	9	122	66	75	
	10	595.23	0.144	1.32	1.32	86	9	122	62	72	
	20	602.07	0.147	1.35	1.35	86	9	120	64	71	
	60/OFF	609.048									
		44.056			1.53	86				74	
							9.40	61			

V_M — $(\sqrt{\Delta P})^2$ — $\Delta H_{@}$ — T_M — T_S

ENTROPY

PARTICULATE FIELD DATA

COMPANY NAME EMB/GREENSBORO INDUSTRIAL PLATERS RUN NUMBER TE-7A
ADDRESS GREENSBORO, N.C. TIME START 1305
SAMPLING LOCATION COATING TANK #5 EXHAUST TIME FINISH 1410
DATE 3-24-86 TEAM LEADER DR TECHNICIANS –
BAROMETRIC PRESSURE, IN. HG 29.5 STATIC PRESSURE, IN. H_2O -0.73
SAMPLING TRAIN LEAK TEST VACUUM, IN. HG 14 07
SAMPLING TRAIN LEAK RATE, CU. FT./MIN. 0.002 0.000

EQUIPMENT CHECKS

✓ PITOTS, PRE-TEST
✓ PITOTS, POST-TEST
NA ORSAT SAMPLING SYSTEM
NA TEDLAR BAG
✓ THERMOCOUPLE @ 71 °F

IDENTIFICATION NUMBERS

REAGENT BOX 0220 NOZZLE 508 DIAMETER .313
METER BOX N-5 T/C READOUT 25
UMBILICAL A T/C PROBE 4-1
SAMPLE BOX 11 ORSAT PUMP NA
PROBE 2-3 TEDLAR BAG NA

FILTER #	TARE

NOMOGRAPH SET-UP NOMOGRAPH # DR

$\Delta H_@$ 1.82 C FACTOR 1.07
METER TEMP 80 STACK TEMP 70
% MOISTURE 02 REF. ΔP 0.170

SAMPLE POINT	CLOCK TIME, MIN.	DRY GAS METER READING, CU. FT.	PITOT READING (ΔP), IN. H_2O	ORIFICE SETTING (ΔH), IN. H_2O IDEAL	ACTUAL	GAS METER TEMP. °F	PUMP VACUUM IN. HG GAUGE	FILTER BOX TEMP. °F	IMP. EXIT TEMP. °F	STACK TEMP. °F	LK. CHECK READINGS
B-5	0/0	352.403	0.206	2.23	2.23	81	7	–	66	72	
	10	360.40	0.207	2.24	2.24	84	7	–	56	72	
	20	368.47	0.207	2.24	2.24	86	7	–	55	72	
A-4	30/0	376.63	0.170	1.84	1.84	85	6	–	63	72	
	10	384.02	0.176	1.90	1.90	86	6	–	55	72	
	20	391.48	0.176	1.90	1.90	87	6	–	55	71	
	60/OFF	399.048									

V_M $(\sqrt{\Delta P})^2$ ΔH T_M T_S

ENTROPY

PARTICULATE FIELD DATA

COMPANY NAME EMB/GREENSBORO INDUSTRIAL PAINTERS RUN NUMBER TE-7B
ADDRESS GREENSBORO, N.C. TIME START 1306
SAMPLING LOCATION COATING TANK #5 EXHAUST TIME FINISH 1411
DATE 3-24-86 TEAM LEADER DR TECHNICIANS —
BAROMETRIC PRESSURE, IN. HG 29.5 STATIC PRESSURE, IN. H_2O -0.78
SAMPLING TRAIN LEAK TEST VACUUM, IN. HG 15 05
SAMPLING TRAIN LEAK RATE, CU. FT./MIN. 0.000 0.000

EQUIPMENT CHECKS

- ✓ PITOTS, PRE-TEST
- ✓ PITOTS, POST-TEST
- NA ORSAT SAMPLING SYSTEM
- NA TEDLAR BAG
- ✓ THERMOCOUPLE @ 71 °F

IDENTIFICATION NUMBERS

REAGENT BOX 0277 NOZZLE 509 DIAMETER .312
METER BOX N-152 T/C READOUT 0009
UMBILICAL B T/C PROBE 4-10
SAMPLE BOX 13 ORSAT PUMP NA
PROBE 2-2 TEDLAR BAG NA

FILTER # **TARE**

NOMOGRAPH SET-UP NOMOGRAPH # DR

$\Delta H_@$ +821.58 C FACTOR 0.95
METER TEMP 90 STACK TEMP 70
% MOISTURE 02 REF. ΔP .195
γ = 0.998 K = 9.43589

SAMPLE POINT	CLOCK TIME, MIN.	DRY GAS METER READING, CU. FT.	PITOT READING (ΔP), IN. H_2O	ORIFICE SETTING (ΔH), IN. H_2O IDEAL	ACTUAL	GAS METER TEMP. °F	PUMP VACUUM IN. HG GAUGE	FILTER BOX TEMP. °F	IMP. EXIT TEMP. °F	STACK TEMP. °F	LK. CHECK READINGS
A-4	0/0	482.724	0.168	1.59	1.59	91	3	—	66	72	
	10	489.99	0.166	1.57	1.57	92	3	—	57	72	
	20	497.24	0.175	1.65	1.65	93	3	—	57	72	
B-5	30/0	504.86	0.220	2.08	2.08	92	4	—	62	72	
	10	513.34	0.227	2.14	2.14	94	4	—	56	72	
	20	522.08	0.227	2.14	2.14	95	4	—	56	71	
	60/OFF	530.907									

V_M $(\sqrt{\Delta P})^2$ ΔH T_M T_S

ENTROPY

PARTICULATE FIELD DATA

COMPANY NAME EMB/GREENSBORO INDUSTRIAL PLATERS — RUN NUMBER TE-8A
ADDRESS GREENSBORO N.C. — TIME START 1447
SAMPLING LOCATION COATING TANK #5 EXHAUST — TIME FINISH 1545
DATE 3-24-86 — TEAM LEADER DR — TECHNICIANS
BAROMETRIC PRESSURE, IN. HG 29.5 — STATIC PRESSURE, IN. H_2O -0.75
SAMPLING TRAIN LEAK TEST VACUUM, IN. HG 15 07
SAMPLING TRAIN LEAK RATE, CU. FT./MIN. 0.010 0.007

EQUIPMENT CHECKS

- ✓ PITOTS, PRE-TEST
- ✓ PITOTS, POST-TEST
- NA ORSAT SAMPLING SYSTEM
- NA TEDLAR BAG
- ✓ THERMOCOUPLE @ 72 °F

IDENTIFICATION NUMBERS

REAGENT BOX 0220 — NOZZLE 507 — DIAMETER .304
METER BOX N-5 — T/C READOUT 0009
UMBILICAL A — T/C PROBE 4-3
SAMPLE BOX 24 — ORSAT PUMP NA
PROBE 2-4 — TEDLAR BAG NA

FILTER #	TARE

NOMOGRAPH SET-UP — NOMOGRAPH # DR

$\Delta H_@$ 1.82 — C FACTOR 1.09
METER TEMP 85 — STACK TEMP 70
% MOISTURE 02 — REF. ΔP 0.188

SAMPLE POINT	CLOCK TIME, MIN.	DRY GAS METER READING, CU. FT.	PITOT READING (ΔP), IN. H_2O	ORIFICE SETTING (ΔH), IN. H_2O IDEAL	ORIFICE SETTING (ΔH), IN. H_2O ACTUAL	GAS METER TEMP. °F	PUMP VACUUM IN. HG GAUGE	FILTER BOX TEMP. °F	IMP. EXIT TEMP. °F	STACK TEMP. °F	LK. CHECK READINGS
A-4	0/0	399.372	0.165	1.61	1.61	84	6	–	65	72	
	10	406.18	0.166	1.62	1.62	86	6	–	55	72	
	20	413.11	0.164	1.60	1.60	87	6	–	55	72	
B-5	30/0	420.01	0.205	2.00	2.00	86	7	–	64	72	
	10	427.62	0.207	2.04	2.04	88	7	–	56	72	
	20	435.50	0.207	2.04	2.04	89	7	–	56	72	
	60/OFF	443.307									STOPPED PROCESS @ 1543
		[illegible]									

V_M — $(\sqrt{\Delta P})^2$ — $\Delta H_{@}$ — T_M — T_S

ENTROPY

PARTICULATE FIELD DATA

COMPANY NAME EMB/GREENSBORO INDUSTRIAL PLATERS — RUN NUMBER TE-8B
ADDRESS GREENSBORO, N.C. — TIME START 1443
SAMPLING LOCATION COATING TANK #5 EXHAUST — TIME FINISH 1546
DATE 3-24-86 — TEAM LEADER DR — TECHNICIANS
BAROMETRIC PRESSURE, IN. HG 29.50 — STATIC PRESSURE, IN. H_2O -0.75
SAMPLING TRAIN LEAK TEST VACUUM, IN. HG 10 07
SAMPLING TRAIN LEAK RATE, CU. FT./MIN. 0.000 0.000

EQUIPMENT CHECKS

- ✓ PITOTS, PRE-TEST
- ✓ PITOTS, POST-TEST
- NA ORSAT SAMPLING SYSTEM
- NA TEDLAR BAG
- ✓ THERMOCOUPLE @ ____ °F

IDENTIFICATION NUMBERS

REAGENT BOX 0277 — NOZZLE 108 — DIAMETER .301
METER BOX N-2 — T/C READOUT 25
UMBILICAL B — T/C PROBE 5-11
SAMPLE BOX 5 — ORSAT PUMP NA
PROBE 2-1 — TEDLAR BAG NA

FILTER # **TARE**

NOMOGRAPH SET-UP — NOMOGRAPH # DR

$\Delta H_@$ 1.58 — C FACTOR 0.95
METER TEMP 90 — STACK TEMP 70
% MOISTURE 02 — REF. ΔP 0.223

SAMPLE POINT	CLOCK TIME, MIN.	DRY GAS METER READING, CU. FT.	PITOT READING (ΔP), IN. H_2O	ORIFICE SETTING (ΔH), IN. H_2O IDEAL	ACTUAL	GAS METER TEMP. °F	PUMP VACUUM IN. HG GAUGE	FILTER BOX TEMP. °F	IMP. EXIT TEMP. °F	STACK TEMP. °F	LK. CHECK READINGS
B-5	0/0	531.108	0.194	1.60	1.60	93	7	–	64	72	
	10	538.58	0.198	1.63	1.63	94	7	–	56	72	
	20	546.23	0.198	1.63	1.63	95	7	–	56	72	
A-4	30/0	553.95	0.155	1.28	1.28	94	6	–	64	72	
	10	560.78	0.155	1.28	1.28	95	6	–	57	72	
	20	567.67	0.155	1.28	1.28	96	6	–	56	72	
	60/OFF	574.562									STOPPED PROCESS @1543

V_M — $(\sqrt{\Delta P})^2$ — ΔH — T_M — T_S

ENTROPY

PARTICULATE FIELD DATA

COMPANY NAME EMB/GREENSBORO INDUSTRIAL PLATERS
RUN NUMBER TE-9A
ADDRESS GREENSBORO, N.C.
TIME START 0820
SAMPLING LOCATION COATING TANK #5 EXHAUST
TIME FINISH 0925
DATE 3-25-86
TEAM LEADER DR
TECHNICIANS ~~-0.75~~
BAROMETRIC PRESSURE, IN. HG 29.50
STATIC PRESSURE, IN. H_2O -0.75
SAMPLING TRAIN LEAK TEST VACUUM, IN. HG 13 07
SAMPLING TRAIN LEAK RATE, CU. FT./MIN. 0.014 0.018

EQUIPMENT CHECKS

✓ PITOTS, PRE-TEST
___ PITOTS, POST-TEST
NA ORSAT SAMPLING SYSTEM
NA TEDLAR BAG
✓ THERMOCOUPLE @ 65 °F

IDENTIFICATION NUMBERS

REAGENT BOX 0220 NOZZLE 508 DIAMETER .313
METER BOX N-5 T/C READOUT 25
UMBILICAL A T/C PROBE 4-1
SAMPLE BOX 11 ORSAT PUMP NA
PROBE 2-3 TEDLAR BAG NA

FILTER #	TARE
—	—

NOMOGRAPH SET-UP NOMOGRAPH # DR

$\Delta H_@$ 1.82 C FACTOR 1.07
METER TEMP 70 STACK TEMP 65
% MOISTURE 01.5 REF. ΔP 0.170

SAMPLE POINT	CLOCK TIME, MIN.	DRY GAS METER READING, CU. FT.	PITOT READING (ΔP), IN. H_2O	ORIFICE SETTING (ΔH), IN. H_2O IDEAL	ORIFICE SETTING (ΔH), IN. H_2O ACTUAL	GAS METER TEMP. °F	PUMP VACUUM IN. HG GAUGE	FILTER BOX TEMP. °F	IMP. EXIT TEMP. °F	STACK TEMP. °F	LK. CHECK READINGS
A-4	0/0	443.783	0.147	1.59	1.59	66	5	—	62	65	
	10	450.48	0.147	1.59	1.59	71	5	—	54	66	
	20	457.36	0.147	1.59	1.59	73	5	—	56	66	
B-5	30/0	464.08	0.212	2.29	2.29	~~75~~ 73	5.7	—	56	66	
B-5	10	472.18	0.213	2.30	2.30	76	7	—	57	67	
	20	480.36	0.214	2.32	2.32	78	7	—	57	68	
	60/OFF	488.911									

V_M $(\sqrt{\Delta P})^2$ ΔH $B-20T_M$ T_S

ENTROPY

PARTICULATE FIELD DATA

COMPANY NAME EMB/GREENSBORO INDUSTRIAL PLATERS — RUN NUMBER TE-9B
ADDRESS GREENSBORO N.C. — TIME START 0821
SAMPLING LOCATION COATING TANK #5 EXHAUST — TIME FINISH 0926
DATE 3-25-86 — TEAM LEADER DR — TECHNICIANS
BAROMETRIC PRESSURE, IN. HG 29.50 — STATIC PRESSURE, IN. H_2O -0.73
SAMPLING TRAIN LEAK TEST VACUUM, IN. HG 12 05
SAMPLING TRAIN LEAK RATE, CU. FT./MIN. 0.000 0.000

EQUIPMENT CHECKS

- ✓ PITOTS, PRE-TEST
- ✓ PITOTS, POST-TEST
- NA ORSAT SAMPLING SYSTEM
- NA TEDLAR BAG
- ✓ THERMOCOUPLE @ 65 °F

IDENTIFICATION NUMBERS

REAGENT BOX 0277 — NOZZLE 509 — DIAMETER .312
METER BOX N-92 — T/C READOUT 0009
UMBILICAL B — T/C PROBE 4-10
SAMPLE BOX 13 — ORSAT PUMP NA
PROBE 2-2 — TEDLAR BAG NA

FILTER #	TARE

NOMOGRAPH SET-UP — NOMOGRAPH # DR

$\Delta H_@$ ~~1.60~~ 1.58 — C FACTOR 0.925
METER TEMP 70 — STACK TEMP 65
% MOISTURE 01.5 — REF. ΔP ~~0.925~~ 0.195
γ = ~~1.0027~~ .998

SAMPLE POINT	CLOCK TIME, MIN.	DRY GAS METER READING, CU. FT.	PITOT READING (ΔP), IN. H_2O	ORIFICE SETTING (ΔH), IN. H_2O IDEAL	ORIFICE SETTING (ΔH), IN. H_2O ACTUAL	GAS METER TEMP. °F	PUMP VACUUM IN. HG GAUGE	FILTER BOX TEMP. °F	IMP. EXIT TEMP. °F	STACK TEMP. °F	LK. CHECK READINGS
B-5	0/0	577.360	0.222	2.09	2.09	64	4	–	62	65	
	10	584.44	0.219	2.07	2.07	74	4	–	53	66	
	20	591.68	0.222	2.09	2.09	79	4	–	54	66	
A-4	30/0	598.85	0.168	1.59	1.59	80	3	–	65	66	
	10	605.01	0.168	1.59	1.59	83	3	–	56	67	
	20	611.40	0.165	1.56	1.56	85	3	–	56	68	
	60/OFF	617.714									

V_M — $(\sqrt{\Delta P})^2$ — ΔH B-21 T_M — T_S

ENTROPY

PARTICULATE FIELD DATA

COMPANY NAME EMB/GREENSBORO INDUSTRIAL PLATERS — RUN NUMBER TE-10A
ADDRESS GREENSBORO, N.C. — TIME START 1016
SAMPLING LOCATION COATING TANK #5 EXHAUST — TIME FINISH 1119
DATE 3-25-86 — TEAM LEADER DR — TECHNICIANS —
BAROMETRIC PRESSURE, IN. HG 29.50 — STATIC PRESSURE, IN. H_2O -0.73
SAMPLING TRAIN LEAK TEST VACUUM, IN. HG 14 08
SAMPLING TRAIN LEAK RATE, CU. FT./MIN. 0.002 0.000

EQUIPMENT CHECKS

✓ PITOTS, PRE-TEST
✓ PITOTS, POST-TEST
NA ORSAT SAMPLING SYSTEM
NA TEDLAR BAG
✓ THERMOCOUPLE @ 70 °F

IDENTIFICATION NUMBERS

REAGENT BOX 0207 NOZZLE 507 DIAMETER .304
METER BOX N-5 T/C READOUT 0009
UMBILICAL A T/C PROBE 4-3
SAMPLE BOX 24 ORSAT PUMP NA
PROBE 2-4 TEDLAR BAG

FILTER # **TARE**

NOMOGRAPH SET-UP NOMOGRAPH # DR

$\Delta H_@$ ~~1.58~~ 1.82 C FACTOR 1.05
METER TEMP ~~88~~ 75 STACK TEMP 70
% MOISTURE 1.5 REF. ΔP. 0.196

SAMPLE POINT	CLOCK TIME, MIN.	DRY GAS METER READING, CU. FT.	PITOT READING (ΔP), IN. H_2O	ORIFICE SETTING (ΔH), IN. H_2O IDEAL	ORIFICE SETTING (ΔH), IN. H_2O ACTUAL	GAS METER TEMP. °F	PUMP VACUUM IN. HG GAUGE	FILTER BOX TEMP. °F	IMP. EXIT TEMP. °F	STACK TEMP. °F	LK. CHEC READINGS
A-4	0/0	488.769	0.166	1.56	1.56	71	6	–	65	70	
	10	495.35	0.166	1.56	1.56	73	6	–	58	71	
	20	502.06	0.170	1.60	1.60	76	6	–	57	70	
B-5	30/0	508.87	0.218	2.05	2.05	78	8	–	62	70	
	10	516.61	0.211	1.98	1.98	83	8	–	56	70	
	20	524.18	0.208	1.95	1.95	85	8	–	57	71	
	60/OFF	531.773									
					1.78	78				70	

V_M $(\sqrt{\Delta P})^2$ $\Delta H_{@}$ T_M T_S

ENTROPY

PARTICULATE FIELD DATA

COMPANY NAME EMB/GREENSBORO INDUSTRIAL PLATERS
ADDRESS GREENSBORO, N.C.
SAMPLING LOCATION COATING TANK #5 EXHAUST
DATE 3-25-86 TEAM LEADER DR TECHNICIANS
BAROMETRIC PRESSURE, IN. HG 29.50 STATIC PRESSURE, IN. H_2O -0.73
SAMPLING TRAIN LEAK TEST VACUUM, IN. HG 10 06
SAMPLING TRAIN LEAK RATE, CU. FT./MIN. 0.000 0.000

RUN NUMBER TE-10B
TIME START 1017
TIME FINISH 1120

EQUIPMENT CHECKS

- ✓ PITOTS, PRE-TEST
- ✓ PITOTS, POST-TEST
- NA ORSAT SAMPLING SYSTEM
- NA TEDLAR BAG
- ✓ THERMOCOUPLE @ 70 °F

IDENTIFICATION NUMBERS

REAGENT BOX 0219 NOZZLE 108 DIAMETER .301
METER BOX N-2 T/C READOUT 25
UMBILICAL B T/C PROBE 5-11
SAMPLE BOX 5 ORSAT PUMP
PROBE 2-1 TEDLAR BAG

FILTER #	TARE

NOMOGRAPH SET-UP NOMOGRAPH # DR

$\Delta H_@$ 1.58 C FACTOR 0.95
METER TEMP 85 STACK TEMP 70
% MOISTURE 1.5 REF. ΔP 0.225

SAMPLE POINT	CLOCK TIME, MIN.	DRY GAS METER READING, CU. FT.	PITOT READING (ΔP), IN. H_2O	ORIFICE SETTING (ΔH), IN. H_2O IDEAL	ORIFICE SETTING (ΔH), IN. H_2O ACTUAL	GAS METER TEMP. °F	PUMP VACUUM IN. HG GAUGE	FILTER BOX TEMP. °F	IMP. EXIT TEMP. °F	STACK TEMP. °F	LK. CHECK READINGS
B-5	0/0	624.041	0.202	1.65	1.65	81	6	–	65	70	
	10	630.44	0.202	1.65	1.65	84	6	–	57	71	
	20	637.02	0.207	1.69	1.69	87	6	–	58	70	
	30/0	643.75	0.155	1.27	1.27	88	5	–	63	70	
	10	649.30	0.151	1.23	1.23	90	5	–	57	70	
	20	654.92	0.148	1.21	1.21	91	5	–	57	71	
	60/OFF	660.450									

V_M $(\sqrt{\Delta P})^2$ ΔH B-23 T_M T_S

ENTROPY

PARTICULATE FIELD DATA

COMPANY NAME EMB/GREENSBORO INDUSTRIAL PLATERS — RUN NUMBER TE-11A
ADDRESS GREENSBORO, N.C. — TIME START 1332
SAMPLING LOCATION COATING TANK #5 EXHAUST — TIME FINISH 1436
DATE 3-25-86 — TEAM LEADER DR — TECHNICIANS
BAROMETRIC PRESSURE, IN. HG 29.50 — STATIC PRESSURE, IN. H_2O -0.073
SAMPLING TRAIN LEAK TEST VACUUM, IN. HG 14 07
SAMPLING TRAIN LEAK RATE, CU. FT./MIN. 0.000 0.000

EQUIPMENT CHECKS

- ✓ PITOTS, PRE-TEST
- ✓ PITOTS, POST-TEST
- NA ORSAT SAMPLING SYSTEM
- NA TEDLAR BAG
- ✓ THERMOCOUPLE @ 72 °F

IDENTIFICATION NUMBERS

REAGENT BOX 0207 — NOZZLE 508 — DIAMETER .313
METER BOX N-5 — T/C READOUT 25
UMBILICAL A — T/C PROBE 4-1
SAMPLE BOX 11 — ORSAT PUMP NA
PROBE 2-3 — TEDLAR BAG NA

FILTER #	TARE
—	—

NOMOGRAPH SET-UP — NOMOGRAPH # DR

$\Delta H_@$ 1.82 — C FACTOR 1.09
METER TEMP 85 — STACK TEMP 70
% MOISTURE 1.5 — REF. ΔP 0.167
γ = 0.9940

SAMPLE POINT	CLOCK TIME, MIN.	DRY GAS METER READING, CU. FT.	PITOT READING (ΔP), IN. H_2O	ORIFICE SETTING (ΔH), IN. H_2O IDEAL	ORIFICE SETTING (ΔH), IN. H_2O ACTUAL	GAS METER TEMP. °F	PUMP VACUUM IN. HG GAUGE	FILTER BOX TEMP. °F	IMP. EXIT TEMP. °F	STACK TEMP. °F	LK. CHECK READINGS
B-5	0/0	540.873	0.204	2.25	2.25	86	6	—	66	72	
	10	549.00	0.221	2.43	2.43	89	7	—	59	72	
	20	557.34	0.214	2.35	2.35	91	7	—	56	72	
A-4	30/0	565.75	0.178	1.96	1.96	89	6	—	65	72	
	10	573.37	0.177	1.95	1.95	92	6	—	58	72	
	20	580.07	0.177	1.95	1.95	92	6	—	58	72	
	60/OFF	588.757									

V_M — $(\sqrt{\Delta P})^2$ — ΔH — T_M — T_S

ENTROPY

PARTICULATE FIELD DATA

COMPANY NAME EMB/GREENSBORO INDUSTRIAL PLATERS — RUN NUMBER TE-11B
ADDRESS GREENSBORO, N.C. — TIME START 1333
SAMPLING LOCATION COATING TANK #5 EXHAUST — TIME FINISH 1437
DATE 3-25-86 — TEAM LEADER DR — TECHNICIANS
BAROMETRIC PRESSURE, IN. HG 29.50 — STATIC PRESSURE, IN. H_2O -0.56
SAMPLING TRAIN LEAK TEST VACUUM, IN. HG 10 03
SAMPLING TRAIN LEAK RATE, CU. FT./MIN. 0.008 0.018

EQUIPMENT CHECKS

- ✓ PITOTS, PRE-TEST
- ✓ PITOTS, POST-TEST
- NA ORSAT SAMPLING SYSTEM
- NA TEDLAR BAG
- ✓ THERMOCOUPLE @ 72 °F

IDENTIFICATION NUMBERS

REAGENT BOX 0219 — NOZZLE 509 — DIAMETER .312
METER BOX N-9 — T/C READOUT 0009
UMBILICAL B — T/C PROBE 4-10
SAMPLE BOX 13 — ORSAT PUMP NA
PROBE 2-2 — TEDLAR BAG NA

FILTER #	TARE

NOMOGRAPH SET-UP — NOMOGRAPH # DR

$\Delta H_@$ 1.60 — C FACTOR 0.99
METER TEMP 85 90 — STACK TEMP 70
% MOISTURE 1.5 — REF. ΔP 0.187
γ = 1.0021

SAMPLE POINT	CLOCK TIME, MIN.	DRY GAS METER READING, CU. FT.	PITOT READING (ΔP), IN. H_2O	ORIFICE SETTING (ΔH), IN. H_2O IDEAL	ACTUAL	GAS METER TEMP. °F	PUMP VACUUM IN. HG GAUGE	FILTER BOX TEMP. °F	IMP. EXIT TEMP. °F	STACK TEMP. °F	LK. CHECK READINGS
A-4	0/0	472.318	0.188	1.85	1.85	86	2	–	66	72	
	10	480.51	0.192	1.89	1.89	88	2	–	60	72	
	20	489.08	0.190	1.87	1.87	89	2	–	57	72	
B-5	30/0	497.57	0.235	2.31	2.31	88	3	–	65	72	
	10	506.99	0.233	2.29	2.29	90	3	–	58	72	
	20	516.50	0.237	2.33	2.33	91	3	–	57	72	
	60/OFF	526.137									
		[illegible]			[illegible]	94		[illegible]		[illegible]	

V_M — $(\sqrt{\Delta P})^2$ — ΔH B-25 T_M — T_S

ENTROPY

PARTICULATE FIELD DATA

COMPANY NAME EMB/GREENSBORO INDUSTRIAL PLATERS — RUN NUMBER TE-12A
ADDRESS GREENSBORO, N.C. — TIME START 15:11
SAMPLING LOCATION COATING TANK #5 EXHAUST — TIME FINISH 16:16
DATE 3-25-86 — TEAM LEADER DR — TECHNICIANS
BAROMETRIC PRESSURE, IN. HG 29.50 — STATIC PRESSURE, IN. H_2O -0.73
SAMPLING TRAIN LEAK TEST VACUUM, IN. HG 14 10
SAMPLING TRAIN LEAK RATE, CU. FT./MIN. 0.000 0.004

EQUIPMENT CHECKS

- ✓ PITOTS, PRE-TEST
- ✓ PITOTS, POST-TEST
- NA ORSAT SAMPLING SYSTEM
- NA TEDLAR BAG
- ✓ THERMOCOUPLE @ 72 °F

IDENTIFICATION NUMBERS

REAGENT BOX 0207 — NOZZLE 507 — DIAMETER .304
METER BOX N-5 — T/C READOUT 0009
UMBILICAL A — T/C PROBE 4-3
SAMPLE BOX 24 — ORSAT PUMP NA
PROBE 2-4 — TEDLAR BAG NA

FILTER #	TARE
—	—

NOMOGRAPH SET-UP — NOMOGRAPH # DR

$\Delta H_@$ 1.82 — C FACTOR 1.07
METER TEMP 85 — STACK TEMP 70
% MOISTURE 1.5 — REF. ΔP 0.190

SAMPLE POINT	CLOCK TIME, MIN.	DRY GAS METER READING, CU. FT.	PITOT READING (ΔP), IN. H_2O	ORIFICE SETTING (ΔH), IN. H_2O IDEAL	ORIFICE SETTING (ΔH), IN. H_2O ACTUAL	GAS METER TEMP. °F	PUMP VACUUM IN. HG GAUGE	FILTER BOX TEMP. °F	IMP. EXIT TEMP. °F	STACK TEMP. °F	LK. CHECK READINGS
B-5	0/0	589.063	0.213	2.06	2.06	89	9	—	66	72	
	10	596.93	0.207	2.00	2.00	92	9	—	60	72	
	20	604.73	0.210	2.03	2.03	94	9	—	56	72	
A-4	30/0	612.62	0.180	1.74	1.74	92	8	—	67	72	
	10	619.86	0.180	1.74	1.74	93	8	—	58	73	
	20	627.13	0.182	1.76	1.76	94	8	—	55	73	
	60/OFF	634.438									
		45.375				92		[illegible]		72	

V_M — $(\sqrt{\Delta P})^2$ — ΔH B-26 T_M — T_S

ENTROPY

PARTICULATE FIELD DATA

COMPANY NAME EMB/GREENSBORO INDUSTRIAL PLATERS
ADDRESS GREENSBORO, NC
SAMPLING LOCATION COATING TANK #5 EXHAUST
DATE 3-25-86 TEAM LEADER DR TECHNICIANS
BAROMETRIC PRESSURE, IN. HG 29.50 STATIC PRESSURE, IN. H_2O -0.75
SAMPLING TRAIN LEAK TEST VACUUM, IN. HG 44 14 05
SAMPLING TRAIN LEAK RATE, CU. FT./MIN. ~~0.000~~ 0.000 0.008

RUN NUMBER TE12-B
TIME START 15:12
TIME FINISH 16:17

EQUIPMENT CHECKS

✓ PITOTS, PRE-TEST
✓ PITOTS, POST-TEST
NA ORSAT SAMPLING SYSTEM
NA TEDLAR BAG
✓ THERMOCOUPLE @ 72 °F

IDENTIFICATION NUMBERS

REAGENT BOX 0219 NOZZLE 108 DIAMETER .301
METER BOX N-9 T/C READOUT 25
UMBILICAL B T/C PROBE 5-11
SAMPLE BOX 5 ORSAT PUMP NA
PROBE 2-1 TEDLAR BAG NA

FILTER #	TARE

NOMOGRAPH SET-UP NOMOGRAPH # DR

$\Delta H_@$ 1.60 C FACTOR 0.96
METER TEMP 85 STACK TEMP 70
% MOISTURE 1.5 REF. ΔP 0.22

SAMPLE POINT	CLOCK TIME, MIN.	DRY GAS METER READING, CU. FT.	PITOT READING (ΔP), IN. H_2O	ORIFICE SETTING (ΔH), IN. H_2O IDEAL	ORIFICE SETTING (ΔH), IN. H_2O ACTUAL	GAS METER TEMP. °F	PUMP VACUUM IN. HG GAUGE	FILTER BOX TEMP. °F	IMP. EXIT TEMP. °F	STACK TEMP. °F	LK. CHECK READINGS
A-4	0/0	527.888	0.175	1.46	1.46	89	5	–	66	72	
	10	535.26	0.178	1.49	1.49	91	5	–	60	72	
	20	542.76	0.178	1.49	1.49	92	5	–	57	72	
B-5	30/0	550.31	0.205	1.71	1.71	91	5	–	66	72	
	10	558.30	0.200	1.67	1.67	93	5	–	60	73	
	20	566.32	0.205	1.71	1.71	93	5	–	56	73	
	60/OFF	574.477									
		[illegible]			1.59	12		16 [illegible]		[illegible]	

V_M $(\sqrt{\Delta P})^2$ ΔH B-27 T_M T_S

ENTROPY

PARTICULATE FIELD DATA

COMPANY NAME EMB/GREENSBORO INDUSTRIAL PLATERS — RUN NUMBER TE-13A
ADDRESS GREENSBORO, N.C. — TIME START 0829
SAMPLING LOCATION COATING TANK #5 EXHAUST — TIME FINISH 0949
DATE 3-26-86 — TEAM LEADER DR — TECHNICIANS --
BAROMETRIC PRESSURE, IN. HG 29.5 — STATIC PRESSURE, IN. H_2O -0.70
SAMPLING TRAIN LEAK TEST VACUUM, IN. HG 12 06
SAMPLING TRAIN LEAK RATE, CU. FT./MIN. 0.000 0.010

EQUIPMENT CHECKS

- ✓ PITOTS, PRE-TEST
- ___ PITOTS, POST-TEST
- NA ORSAT SAMPLING SYSTEM
- NA TEDLAR BAG
- ✓ THERMOCOUPLE @ 71 °F

IDENTIFICATION NUMBERS

REAGENT BOX 0235 — NOZZLE 508 — DIAMETER .313
METER BOX N-7 — T/C READOUT 25
UMBILICAL A — T/C PROBE 4-1
SAMPLE BOX 11 — ORSAT PUMP NA
PROBE 2-3 — TEDLAR BAG NA

FILTER #	TARE

NOMOGRAPH SET-UP — NOMOGRAPH # DR

$\Delta H_@$ 1.75 — C FACTOR 1.04
METER TEMP 80 — STACK TEMP 70
% MOISTURE 2 — REF. ΔP 0.175
$\gamma = 1.000$

SAMPLE POINT	CLOCK TIME, MIN.	DRY GAS METER READING, CU. FT.	PITOT READING (ΔP), IN. H_2O	ORIFICE SETTING (ΔH), IN. H_2O IDEAL	ORIFICE SETTING (ΔH), IN. H_2O ACTUAL	GAS METER TEMP. °F	PUMP VACUUM IN. HG GAUGE	FILTER BOX TEMP. °F	IMP. EXIT TEMP. °F	STACK TEMP. °F	LK. CHEC READINGS
B-5	0/0	959.538	0.193	2.03	2.03	75	6	–	67	71	
	10	967.67	0.198	2.08	2.08	81	6	–	58	71	STOPPED @
	20	975.98	0.200	2.10	2.10	85	6	–	55	71	0841
A-4	30/0	984.34	0.166	1.74	1.74	86	5	–	65	72	RESTART @ 0857
	10	991.90	0.163	1.71	1.71	89	5	–	56	72	
	20	999.47	0.163	1.71	1.71	90	5	–	55	72	
	60/OFF	007.060									

V_M — $(\sqrt{\Delta P})^2$ — ΔH B-28 T_M — T_S

ENTROPY

PARTICULATE FIELD DATA

COMPANY NAME EMB/GREENSBORO INDUSTRIAL PLATERS
ADDRESS GREENSBORO, N.C.
SAMPLING LOCATION COATING TANK #5 EXHAUST
DATE 3-26-86 TEAM LEADER DR
BAROMETRIC PRESSURE, IN. HG 29.5

RUN NUMBER TE13B
TIME START 0830
TIME FINISH 0950
TECHNICIANS
STATIC PRESSURE, IN. H_2O -0.80

SAMPLING TRAIN LEAK TEST VACUUM, IN. HG 14 03
SAMPLING TRAIN LEAK RATE, CU. FT./MIN. 0.014 0.010

EQUIPMENT CHECKS

- ✓ PITOTS, PRE-TEST
- ✓ PITOTS, POST-TEST
- NA ORSAT SAMPLING SYSTEM
- NA TEDLAR BAG
- ✓ THERMOCOUPLE @ 71 °F

IDENTIFICATION NUMBERS

REAGENT BOX 0224 NOZZLE 509 DIAMETER .312
METER BOX N-8 T/C READOUT 0009
UMBILICAL B T/C PROBE 4-10
SAMPLE BOX 13 ORSAT PUMP NA
PROBE 2-2 TEDLAR BAG NA

FILTER #	TARE
—	—

NOMOGRAPH SET-UP

NOMOGRAPH # DR

$\Delta H_@$ 1.61 C FACTOR 0.97
METER TEMP 85 STACK TEMP 70
% MOISTURE 02 REF. ΔP. 0.190
$\gamma = 1.0119$

SAMPLE POINT	CLOCK TIME, MIN.	DRY GAS METER READING, CU. FT.	PITOT READING (ΔP), IN. H_2O	ORIFICE SETTING (ΔH), IN. H_2O IDEAL	ORIFICE SETTING (ΔH), IN. H_2O ACTUAL	GAS METER TEMP. °F	PUMP VACUUM IN. HG GAUGE	FILTER BOX TEMP. °F	IMP. EXIT TEMP. °F	STACK TEMP. °F	LK. CHECK READINGS
A-4	0/0	601.619	0.147	1.42	1.42	83	2	—	66	71	STOPPED
	10	608.46	0.148	1.43	1.43	87	3	—	57	71	@ 0841
	20	615.34	0.148	1.43	1.43	90	3	—	54	71	RESTART
B-5	30/0	622.30	0.211	2.04	2.04	90	3	—	65	72	@ 0857
	10	630.59	0.218	2.11	2.11	94	3	—	56	72	
	20	639.02	0.218	2.11	2.11	95	3	—	56	72	
	60/OFF	647.524									

V_M $(\sqrt{\Delta P})^2$ ΔH_{B-29} T_M T_S

ENTROPY

PARTICULATE FIELD DATA

COMPANY NAME EMB/GREENSBORO INDUSTRIAL PLATERS
ADDRESS GREENSBORO, N.C.
SAMPLING LOCATION COATING TANK #5 EXHAUST
DATE 3-26-86 TEAM LEADER DR
BAROMETRIC PRESSURE, IN. HG 29.50
SAMPLING TRAIN LEAK TEST VACUUM, IN. HG 14 08
SAMPLING TRAIN LEAK RATE, CU. FT./MIN. 0.002 0.000

RUN NUMBER TE-14A
TIME START 10:22
TIME FINISH 11:27
TECHNICIANS —
STATIC PRESSURE, IN. H_2O -0.73

EQUIPMENT CHECKS

✓ PITOTS, PRE-TEST
✓ PITOTS, POST-TEST
NA ORSAT SAMPLING SYSTEM
NA TEDLAR BAG
✓ THERMOCOUPLE @ 72 °F

IDENTIFICATION NUMBERS

REAGENT BOX 0235 NOZZLE 509 DIAMETER .312
METER BOX N-7 T/C READOUT 0009
UMBILICAL 4 T/C PROBE 4-10
SAMPLE BOX 24 ORSAT PUMP NA
PROBE 2-2 TEDLAR BAG NA

FILTER #	TARE
—	—

NOMOGRAPH SET-UP NOMOGRAPH # DR

$\Delta H_@$ 1.75 C FACTOR 1.08
METER TEMP 95 STACK TEMP 70
% MOISTURE 02 REF. ΔP 0.173

SAMPLE POINT	CLOCK TIME, MIN.	DRY GAS METER READING, CU. FT.	PITOT READING (ΔP), IN. H_2O	ORIFICE SETTING (ΔH), IN. H_2O IDEAL	ORIFICE SETTING (ΔH), IN. H_2O ACTUAL	GAS METER TEMP. °F	PUMP VACUUM IN. HG GAUGE	FILTER BOX TEMP. °F	IMP. EXIT TEMP. °F	STACK TEMP. °F	LK. C READI
B-5	0/0	7.188	0.213	2.27	2.27	87	8	—	65	72	
	10	15.80	0.212	2.25	2.25	91	8	—	59	72	
	20	24.38	0.212	2.25	2.25	93	8	—	56	71	
A-4	30/0	33.07	0.162	1.72	1.72	91	6	—	65	72	
	10	40.61	0.160	1.70	1.70	93	6	—	56	71	
	20	48.20	0.160	1.70	1.70	93	6	—	57	72	
	60/OFF	55.790									

V_M $(\sqrt{\Delta P})^2$ ΔH T_M T_S

ENTROPY

PARTICULATE FIELD DATA

COMPANY NAME EMB/GREENSBORO INDUSTRIAL PLATERS
ADDRESS GREENSBORO, N.C.
SAMPLING LOCATION COATING TANK #5 EXHAUST
DATE 3-26-86 TEAM LEADER DR TECHNICIANS
BAROMETRIC PRESSURE, IN. HG 29.50 STATIC PRESSURE, IN. H_2O -0.75
SAMPLING TRAIN LEAK TEST VACUUM, IN. HG 14 016
SAMPLING TRAIN LEAK RATE, CU. FT./MIN. 0.009 0.006

RUN NUMBER TE-14B
TIME START 10:23
TIME FINISH 11:28

EQUIPMENT CHECKS

- ✓ PITOTS, PRE-TEST
- ✓ PITOTS, POST-TEST
- NA ORSAT SAMPLING SYSTEM
- NA TEDLAR BAG
- ✓ THERMOCOUPLE @ 72 °F

IDENTIFICATION NUMBERS

REAGENT BOX 0224 NOZZLE 108 DIAMETER .301
METER BOX N-8 T/C READOUT 25
UMBILICAL 8 T/C PROBE 5-11
SAMPLE BOX 5 ORSAT PUMP NA
PROBE 2-1 TEDLAR BAG NA

FILTER #	TARE
—	—

NOMOGRAPH SET-UP

NOMOGRAPH # DR
$\Delta H_@$ 1.61 C FACTOR 0.98
METER TEMP 95 STACK TEMP 70
% MOISTURE 02 REF. ΔP. 0.215

SAMPLE POINT	CLOCK TIME, MIN.	DRY GAS METER READING, CU. FT.	PITOT READING (ΔP), IN. H_2O	ORIFICE SETTING (ΔH), IN. H_2O IDEAL	ORIFICE SETTING (ΔH), IN. H_2O ACTUAL	GAS METER TEMP. °F	PUMP VACUUM IN. HG GAUGE	FILTER BOX TEMP. °F	IMP. EXIT TEMP. °F	STACK TEMP. °F	LK. CHECK READINGS
A-4	0/0	~~647.639~~ ~~+188~~	0.163	1.39	1.39	89	5	—	65	72	
	10	654.42	0.163	1.39	1.39	92	5	—	60	72	
	20	661.24	0.160	1.37	1.37	94	5	—	55	71	
	30/0	668.04	0.197	1.69	1.69	91	6	—	64	72	
	10	675.57	0.201	1.72	1.72	93	6	—	57	71	
	20	683.23	0.200	1.71	1.71	94	6	—	56	72	
	60/OFF	690.825									

V_M $(\sqrt{\Delta P})^2$ ΔH T_M T_S

B-31

ENTROPY

Preliminary Field Data

PLANT NAME Greensboro Industrial Plater

LOCATION Greensboro, NC

SAMPLING LOCATION ~~Scrubber~~ Mist Eliminator Inlet

DUCT DEPTH

FROM INSIDE FAR WALL TO OUTSIDE OF PORT 23 3/4"

NIPPLE LENGTH —

DEPTH OF DUCT 23 3/4"

WIDTH (RECTANGULAR DUCT) —

EQUIVALENT DIAMETER:

$$D_E = \frac{2 \times \text{DEPTH} \times \text{WIDTH}}{\text{DEPTH} + \text{WIDTH}} = \frac{2(\quad)(\quad)}{(\quad + \quad)} = \text{—}$$

DISTANCE FROM PORTS TO NEAREST FLOW DISTURBANCE:	UPSTREAM	DOWNSTREAM
~~FEET~~	9"	8"
STACK DIAMETERS	0.40	0.35

STACK AREA = $\left(\frac{23.75}{2}\right)^2 \pi$ = 443 IN^2

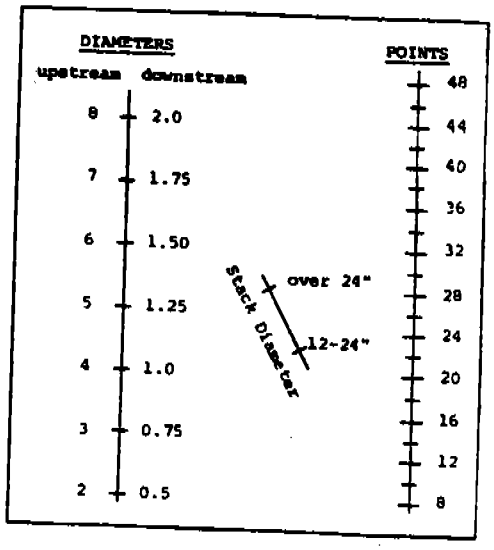

Point	% OF DIAMETER	DISTANCE FROM INSIDE WALL	DISTANCE FROM OUTSIDE OF PORT
1	2.1		1"
2	6.7		1 5/8"
3	11.8		2 3/4"
4	17.7		4 1/4"
5	25.0		6"
6	35.6		8 1/2"
7	64.4		15 1/4"
8	75.0		17 3/4"
9	82.3		19 1/2"
10	88.2		21"
11	93.3		22 1/4"
12	97.9		23 3/4"
13			
14			
15			
16			
17			
18			
19			
20			
21			
22			
23			
24			

LOCATION OF TRAVERSE POINTS IN CIRCULAR STACKS

	4	6	8	10	12	14	16	18	20	22	24
1	6.7	4.4	3.2	2.6	2.1	1.8	1.6	1.4	1.3	1.1	1.1
2	25.0	14.6	10.5	8.2	6.7	5.7	4.9	4.4	3.9	3.5	3.2
3	75.0	29.6	19.4	14.6	11.8	9.9	8.5	7.5	6.7	6.0	5.5
4	93.3	70.4	32.3	22.6	17.7	14.6	12.5	10.9	9.7	8.7	7.9
5		85.4	67.7	34.2	25.0	20.1	16.9	14.6	12.9	11.6	10.5
6		95.6	80.6	65.8	35.6	26.9	22.0	18.8	16.5	14.6	13.2
7			89.5	77.4	64.4	36.6	28.3	23.6	20.4	18.0	16.1
8			96.8	85.4	75.0	63.4	37.5	29.6	25.0	21.8	19.4
9				91.8	82.3	73.1	62.5	38.2	30.6	26.2	23.0
10				97.4	88.2	79.9	71.7	61.8	38.8	31.5	27.2
11					93.3	85.4	78.0	70.4	61.2	39.3	32.3
12					97.9	90.1	83.1	76.4	69.4	60.7	39.8
13						94.3	87.5	81.2	75.0	68.5	60.2
14						98.2	91.5	85.4	79.6	73.8	67.7
15							95.1	89.1	83.5	78.2	72.8
16							98.4	92.5	87.1	82.0	77.0
17								95.6	90.3	85.4	80.6
18								98.6	93.3	88.4	83.9
19									96.1	91.3	86.8
20									98.7	94.0	89.5
21										96.5	92.1
22										98.9	94.5
23											96.8
24											98.9

LOCATION OF TRAVERSE POINTS IN RECTANGULAR STACKS

	2	3	4	5	6	7	8	9	10	11	12
1	25.0	16.7	12.5	10.0	8.3	7.1	6.3	5.6	5.0	4.5	4.2
2	75.0	50.0	37.5	30.0	25.0	21.4	18.8	16.7	15.0	13.6	12.5
3		83.3	62.5	50.0	41.7	35.7	31.3	27.8	25.0	22.7	20.8
4			87.5	70.0	58.3	50.0	43.8	38.9	35.0	31.8	29.2
5				90.0	75.0	64.3	56.3	50.0	45.0	40.9	37.5
6					91.7	78.6	68.8	61.1	55.0	50.0	45.8
7						92.9	81.3	72.2	65.0	59.1	54.2
8							93.8	83.3	75.0	68.2	62.5
9								94.4	85.0	77.3	70.8
10									95.0	86.4	79.2
11										95.5	87.5
12											95.8

YAW ANGLE DATA
FOR CASES OF NON-STREAMLINED FLOW

Plant name GREENSBORO INDUSTRIAL PLATERS Date 3/13/86

Plant location Greensboro, NC Initials FSP, WN

Measurement site MIST ELIMINATOR INLET Pitot type S-type

+ →

POINT	PORT A	PORT B	PORT C	PORT D	PORT E	PORT F	PORT G
1	-10	+10					
2	-10	+15					
3	-5	+12					
4	0	+15					
5	+5	+15					
6	+10	+10					
7	+12						
8	+13						
9	+9						
10	+10						
11	+5						
12	+5						

Average of absolute values of all angles = 9.5

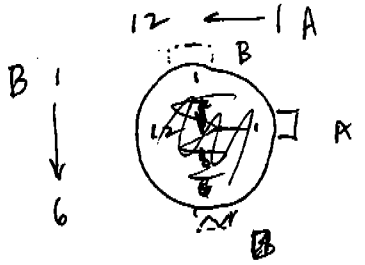

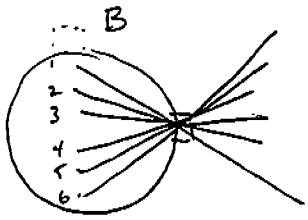

ENTROPY ENVIRONMENTALISTS, INC.

PARTICULATE FIELD DATA

COMPANY NAME Greensboro Ind. Platers
ADDRESS Greensboro NC
RUN NUMBER MI-1
SAMPLING LOCATION Mist Eliminator Inlet
TIME START 08:38
DATE 3/18/86
TIME FINISH 12:07
TEAM LEADER WSN
TECHNICIANS RWB
BAROMETRIC PRESSURE, IN. HG 29.2
STATIC PRESSURE, IN. H_2O -1.35
SAMPLING TRAIN LEAK TEST VACUUM, IN. HG 15 8 8
SAMPLING TRAIN LEAK RATE, CU. FT./MIN. 0.002 0.002 0.009

EQUIPMENT CHECKS

- ✓ PITOTS, PRE-TEST
- ✓ PITOTS, POST-TEST
- NA ORSAT SAMPLING SYSTEM
- NA TEDLAR BAG
- ✓ THERMOCOUPLE @ 62 °F

IDENTIFICATION NUMBERS

REAGENT BOX
NOZZLE 106 DIAMETER .250
METER BOX N.7
T/C READOUT 23
UMBILICAL U.50
T/C PROBE 6-4
SAMPLE BOX 4
ORSAT PUMP NA
PROBE 4.3
TEDLAR BAG NA

FILTER #	TARE

NOMOGRAPH SET-UP

NOMOGRAPH # WSN
$\Delta H_@$ 1.75
C FACTOR 1.03
METER TEMP 80
STACK TEMP 65
% MOISTURE 2
REF. ΔP 0.44

	SAMPLE POINT	CLOCK TIME, MIN.	DRY GAS METER READING, CU. FT.	PITOT READING (ΔP), IN. H_2O	ORIFICE SETTING (ΔH), IN. H_2O IDEAL	ORIFICE SETTING (ΔH), IN. H_2O ACTUAL	GAS METER TEMP. °F	PUMP VACUUM IN. HG GAUGE	FILTER BOX TEMP. °F	IMP. EXIT TEMP. °F	STACK TEMP. °F	LK. CHECK READINGS
212	A 1	0/0	268.153	0.56	2.32	2.32	69	6	200	57	62	
	2	5	272.47	0.55	2.30	2.30	70	6	200	57	62	
	3	10	276.76	0.54	2.28	2.28	74	6	200	57	63	
	4	15	281.19	0.58	2.42	2.42	74	7	200	57	64	
	5	20	285.48	0.64	2.70	2.70	76	7	200	58	64	
	6	25	290.13	0.64	2.70	2.70	77	7	200	59	64	
	7	30	294.78	0.64	2.70	2.70	75	7	200	59	63	
	8	35	299.38	0.66	2.78	2.78	76	7	200	59	64	DOWN 09:19
	9	40	304.23	0.70	2.92	2.92	76	8	200	60	62	RESTART 09:29
	10	45	309.11	0.72	2.98	2.98	78	8	200	60	63	
	11	50	314.02	0.72	2.98	2.98	73	8	200	60	64	DOWN 09:43
	12	55	318.96	0.70	2.92	2.92	77	8	200	60	64	RE-START 10:07
3T	B 1	60/0	323.658	0.58	2.42	2.42	75	7	200	60	66	
		5	328.66	0.58	2.42	2.42	78	7	200	60	67	L.C. 323.603
		10	332.61	0.60	2.50	2.50	79	7	200	60	66	323.658
		15	337.18	0.60	2.50	2.50	80	7	200	62	67	
	2	20	341.58	0.62	2.58	2.58	77	7	200	62	66	
	3	25	346.10	0.62	2.58	2.58	78	7	200	62	66	
	4	30	351.29	0.56	2.32	2.32	78	7	200	62	66	
	5	35	355.04	0.50	2.10	2.10	81	6	200	62	66	DOWN 11:30
	6	40	359.29	0.54	2.28	2.28	78	7	200	63	66	RESTART 11:46
		45	363.49	0.54	2.28	2.28	80	7	200	63	67	
		50	367.88	0.54	2.28	2.28	83	7	200	63	66	
		55	372.24	0.56	2.32	2.32	84	7	200	63	66	
		120/OFF	376.597									

V_M $(\sqrt{\Delta P})^2$ ΔH T_M T_S

ENTROPY

PARTICULATE FIELD DATA

COMPANY NAME Greensboro Ind. Platers
ADDRESS Greensboro, NC
SAMPLING LOCATION Mist Eliminator Inlet
DATE 3/18/86 TEAM LEADER WSN TECHNICIANS RWB
BAROMETRIC PRESSURE, IN. HG 29.2 STATIC PRESSURE, IN. H_2O -1.30
SAMPLING TRAIN LEAK TEST VACUUM, IN. HG 15 8
SAMPLING TRAIN LEAK RATE, CU. FT./MIN. 0.000 0.000

RUN NUMBER MI-2
TIME START 13:10
TIME FINISH 15:32

EQUIPMENT CHECKS

- ✓ PITOTS, PRE-TEST
- ✓ PITOTS, POST-TEST
- NA ORSAT SAMPLING SYSTEM
- NA TEDLAR BAG
- ✓ THERMOCOUPLE @ 68 °F

IDENTIFICATION NUMBERS

REAGENT BOX ____ NOZZLE 104 DIAMETER .257
METER BOX N-7 T/C READOUT 23
UMBILICAL U-50 T/C PROBE 4-2
SAMPLE BOX 16 ORSAT PUMP NA
PROBE 4-1 TEDLAR BAG NA

FILTER #	TARE

NOMOGRAPH SET-UP NOMOGRAPH # WSN

$\Delta H_@$ 1.75 C FACTOR 1.03
METER TEMP 80 STACK TEMP 65
% MOISTURE 2 REF. ΔP 0.40

SAMPLE POINT	CLOCK TIME, MIN.	DRY GAS METER READING, CU. FT.	PITOT READING (ΔP), IN. H_2O	ORIFICE SETTING (ΔH), IN. H_2O IDEAL	ORIFICE SETTING (ΔH), IN. H_2O ACTUAL	GAS METER TEMP. °F	PUMP VACUUM IN. HG GAUGE	FILTER BOX TEMP. °F	IMP. EXIT TEMP. °F	STACK TEMP. °F	LK. CHECK READINGS
A 1	0/0	376.958	0.45	2.09	2.09	71	6	200	62	66	
2	5	381.30	0.52	2.38	2.38	72	7	200	62	68	
3	10	385.53	0.54	2.50	2.50	74	7	200	62	68	
4	15	389.97	0.54	2.50	2.50	76	7	200	62	69	
5	20	394.45	0.60	2.78	2.78	78	7	200	62	69	
6	25	399.29	0.62	2.85	2.85	80	7	200	62	67	
7	30	404.14	0.54	2.50	2.50	82	8	200	62	69	
8	35	408.66	0.58	2.70	2.70	83	8	200	62	69	
9	40	413.32	0.63	2.90	2.90	83	8	200	62	69	
10	45	418.29	0.65	2.98	2.98	85	8	200	62	70	
11	50	423.10	0.62	2.85	2.85	86	8	200	62	69	
12	55	427.96	0.62	2.85	2.85	86	8	200	62	70	
B 1	60/0	432.80	0.52	2.38	2.38	82	7	200	62	71	
	5	437.28	0.52	2.38	2.38	84	7	200	63	70	
	10	441.80	0.55	2.57	2.57	86	7	200	63	70	
	15	446.42	0.54	2.52	2.52	86	7	200	63	70	
2	20	450.74	0.52	2.42	2.42	84	7	200	63	70	DOWN 14:43
3	25	455.28	0.58	2.70	2.70	81	7	200	63	71	
4	30	460.15	0.56	2.62	2.62	83	7	200	63	71	RESTART 14:54
5	35	464.83	0.54	2.52	2.52	86	7	200	63	71	
6	40	469.36	0.50	2.35	2.35	84	7	200	63	72	
	45	473.88	0.52	2.42	2.42	87	7	200	63	72	
	50	478.27	0.52	2.42	2.42	88	7	200	63	71	
	55	482.70	0.52	2.42	2.42	88	7	200	63	71	
	120/OFF	487.183									

V_M $(\sqrt{\Delta P})^2$ ΔH B-35 T_M T_S

ENTROPY

PARTICULATE FIELD DATA

COMPANY NAME Greensboro Ind. Platers
ADDRESS Greensboro NC
SAMPLING LOCATION Mist Eliminator Inlet
DATE 3/19/86
TEAM LEADER WSN
RUN NUMBER MI-3
TIME START 08:04
TIME FINISH 10:42
TECHNICIANS RWB
BAROMETRIC PRESSURE, IN. HG 29.2
STATIC PRESSURE, IN. H_2O -1.35
SAMPLING TRAIN LEAK TEST VACUUM, IN. HG 15 8
SAMPLING TRAIN LEAK RATE, CU. FT./MIN. 0.000 0.003

EQUIPMENT CHECKS

- ✓ PITOTS, PRE-TEST
- ✓ PITOTS, POST-TEST
- NA ORSAT SAMPLING SYSTEM
- NA TEDLAR BAG
- ✓ THERMOCOUPLE @ 73 °F

IDENTIFICATION NUMBERS

REAGENT BOX ____ NOZZLE 106 DIAMETER .250
METER BOX N.7 T/C READOUT 23
UMBILICAL U.50 T/C PROBE 6-4
SAMPLE BOX 4 ORSAT PUMP NA
PROBE 4-3 TEDLAR BAG NA

FILTER #	TARE

NOMOGRAPH SET-UP NOMOGRAPH # WSN

$\Delta H_@$ 1.75 C FACTOR 1.03
METER TEMP 80 STACK TEMP 65
% MOISTURE 2 REF. ΔP 0.44
4.182

SAMPLE POINT	CLOCK TIME, MIN.	DRY GAS METER READING, CU. FT.	PITOT READING (ΔP), IN. H_2O	ORIFICE SETTING (ΔH), IN. H_2O IDEAL	ACTUAL	GAS METER TEMP. °F	PUMP VACUUM IN. HG GAUGE	FILTER BOX TEMP. °F	IMP. EXIT TEMP. °F	STACK TEMP. °F	LK. CHECK READINGS
12 A 1	0/0	487.748	0.45	1.88	1.88	71	6	200	62	73	
2	5	491.77	0.52	2.17	2.17	73	6	200	62	73	
3	10	495.98	0.54	2.26	2.26	76	6	200	62	74	
4	15	500.30	0.60	2.51	2.51	78	7	200	62	74	
5	20	504.83	0.64	2.67	2.67	82	7	200	62	75	DOWN 08:28
6	25	509.38	0.66	2.76	2.76	80	7	200	62	74	RESTART 08:45
7	30	514.53	0.63	2.63	2.63	84	7	200	62	74	
8	35	518.74	0.67	2.80	2.80	86	7	200	62	75	
9	40	523.54	0.67	2.80	2.80	88	7	200	62	75	
10	45	528.44	0.70	2.93	2.93	89	8	200	62	75	
11	50	533.35	0.72	3.01	3.01	90	8	200	62	75	
12	55	538.48	0.70	2.93	2.93	92	8	200	62	75	
1 B 1	60/0	543.23	0.55	2.30	2.30	88	7	200	62	74	
	5	547.73	0.55	2.30	2.30	89	7	200	62	74	
	10	552.40	0.55	2.30	2.30	91	7	200	62	75	
	15	556.47	0.57	2.38	2.38	91	7	200	62	74	
2	20	560.89	0.62	2.59	2.59	92	7	200	62	75	
3	25	565.68	0.60	2.51	2.51	92	7	200	62	75	
4	30	570.28	0.64	2.68	2.68	92	7	200	62	75	DOWN 09:59
5	35	574.91	0.56	2.34	2.34	85	7	200	62	74	RESTART 10:13
6	40	579.24	0.47	1.97	1.97	84	6	200	62	74	
	45	583.42	0.45	1.88	1.88	86	6	200	62	74	
	50	587.21	0.44	1.84	1.84	87	6	200	62	74	
	55	591.29	0.44	1.84	1.84	87	6	200	62	75	
	~~60~~/OFF	595.235									
					2.43	86					
		107.487					17.568			74	
		V_M	$(\sqrt{\Delta P})^2$		ΔH	$B-36T_M$				T_S	

ENTROPY

PARTICULATE FIELD DATA

COMPANY NAME Greensboro Ind. Platers
ADDRESS Greensboro, NC
SAMPLING LOCATION Mist Eliminator Inlet
DATE 3/19/86 TEAM LEADER WSN TECHNICIANS RWB
BAROMETRIC PRESSURE, IN. HG 29.2 STATIC PRESSURE, IN. H_2O -1.33
SAMPLING TRAIN LEAK TEST VACUUM, IN. HG 15 8
SAMPLING TRAIN LEAK RATE, CU. FT./MIN. 0.000 0.000

RUN NUMBER MI-4
TIME START 11:10
TIME FINISH 16:00

EQUIPMENT CHECKS

- ✓ PITOTS, PRE-TEST
- ✓ PITOTS, POST-TEST
- NA ORSAT SAMPLING SYSTEM
- NA TEDLAR BAG
- ✓ THERMOCOUPLE @ 75 °F

IDENTIFICATION NUMBERS

REAGENT BOX ____ NOZZLE 104 DIAMETER .257
METER BOX N.7 T/C READOUT 23
UMBILICAL U.50 T/C PROBE 4.2
SAMPLE BOX 16 ORSAT PUMP NA
PROBE 4.1 TEDLAR BAG NA

FILTER # **TARE**

NOMOGRAPH SET-UP NOMOGRAPH # WSN

$\Delta H_@$ 1.75 C FACTOR 1.03
METER TEMP 85 STACK TEMP 75
% MOISTURE 2 REF. ΔP 0.41
4.488

SAMPLE POINT	CLOCK TIME, MIN.	DRY GAS METER READING, CU. FT.	PITOT READING (ΔP), IN. H_2O	ORIFICE SETTING (ΔH), IN. H_2O IDEAL	ORIFICE SETTING (ΔH), IN. H_2O ACTUAL	GAS METER TEMP. °F	PUMP VACUUM IN. HG GAUGE	FILTER BOX TEMP. °F	IMP. EXIT TEMP. °F	STACK TEMP. °F	LK. CHECK READINGS
A 1	0/0	595.868	0.48	2.15	2.15	81	6	200	63	75	
2	5	600.14	0.45	2.02	2.02	83	6	200	63	75	
3	10	604.48	0.48	2.15	2.15	81	6	200	63	74	DOWN 11:19
4	15	608.97	0.55	2.47	2.47	83	7	200	64	74	RESTART 11:34
5	20	613.32	0.58	2.60	2.60	85	7	200	64	74	
6	25	618.17	0.62	2.78	2.78	87	7	200	64	74	
7	30	622.80	0.62	2.78	2.78	88	7	200	64	75	
8	35	627.59	0.65	2.92	2.92	89	7	200	64	75	
9	40	632.51	0.65	2.92	2.92	90	8	200	64	75	
10	45	637.44	0.65	2.92	2.92	92	8	200	64	75	
11	50	642.37	0.63	2.83	2.83	92	8	200	64	75	
12	55	647.27	0.64	2.87	2.87	92	8	200	64	76	
B 1	60/0	652.17	0.47	2.11	2.11	90	7	205	64	74	DOWN 12:36
	5	656.61	0.50	2.24	2.24	73	7	200	63	72	RESTART 15:08
	10	660.77	0.50	2.24	2.24	74	7	200	63	73	
	15	665.24	0.52	2.33	2.33	76	7	200	63	73	
2	20	669.53	0.56	2.51	2.51	79	7	200	64	73	
3	25	674.16	0.57	2.56	2.56	81	7	200	65	74	
4	30	678.63	0.48	2.15	2.15	84	6	200	65	74	
5	35	682.86	0.48	2.15	2.15	85	6	200	65	74	
6	40	687.11	0.48	2.15	2.15	86	6	200	65	73	
	45	691.48	0.50	2.24	2.24	88	6	200	65	74	
	50	695.64	0.49	2.20	2.20	88	6	200	65	74	
	55	700.02	0.50	2.24	2.24	89	6	200	65	74	
	120/OFF	704.286									
		108.418			2.44	85		17.0100		74	

V_M $(\sqrt{\Delta P})^2$ ΔH T_M T_S

ENTROPY

PARTICULATE FIELD DATA

COMPANY NAME Greensboro Ind. Platers
ADDRESS Greensboro, NC
SAMPLING LOCATION Mist Eliminator Inlet
DATE 3/24/86 TEAM LEADER WSN TECHNICIANS —
BAROMETRIC PRESSURE, IN. HG 29.5 STATIC PRESSURE, IN. H_2O -1.35
RUN NUMBER MI-S1
TIME START 13:04
TIME FINISH 16:14
SAMPLING TRAIN LEAK TEST VACUUM, IN. HG 15 5
SAMPLING TRAIN LEAK RATE, CU. FT./MIN. 0.000 0.000

EQUIPMENT CHECKS

✓ PITOTS, PRE-TEST
✓ PITOTS, POST-TEST
NA ORSAT SAMPLING SYSTEM
NA TEDLAR BAG
✓ THERMOCOUPLE @ 73 °F

IDENTIFICATION NUMBERS

REAGENT BOX —
NOZZLE 5-5
DIAMETER .190
METER BOX B-7
T/C READOUT 23
UMBILICAL U-50
T/C PROBE A-4
SAMPLE BOX 4
ORSAT PUMP NA
PROBE A-4
TEDLAR BAG NA

FILTER #	TARE
B 730	
A 733	
SF 316	

NOMOGRAPH SET-UP

NOMOGRAPH # WSN

$\Delta H_@$ 1.75
C FACTOR 0.98
METER TEMP 85
STACK TEMP 70
% MOISTURE 2
REF. ΔP. 1.33

SAMPLE POINT	CLOCK TIME, MIN.	DRY GAS METER READING, CU. FT.	PITOT READING (ΔP), IN. H_2O	ORIFICE SETTING (ΔH), IN. H_2O IDEAL	ORIFICE SETTING (ΔH), IN. H_2O ACTUAL	GAS METER TEMP. °F	PUMP VACUUM IN. HG GAUGE	FILTER BOX TEMP. °F	IMP. EXIT TEMP. °F	STACK TEMP. °F	LK. CHEC READINGS
A 3	0/0	704.733	0.56	0.77	0.77	78	2	NA	62	73	
	15	713.30	|	|	0.77	81	3	|	62	73	
	30	721.30	|	|	0.77	78	3	|	62	73	- DOWN 13:31
7	45/0	729.06	0.63	|	0.77	78	3	|	62	74	RESTART 13:50
	15	736.85	|	|	0.77	80	3	|	63	74	
	30	744.63	|	|	0.77	80	3	|	63	73	
B 1	90/0	753.02	0.58	|	0.77	78	3	|	63	72	- DOWN 14:51
	15	760.73	|	|	0.77	79	3	|	64	73	RESTART 15:06
	30	768.38	|	|	0.77	80	3	|	64	72	
6	135/0	776.33	0.48	|	0.77	81	3	|	64	72	
	15	784.46	|	|	0.77	82	3	|	64	72	- DOWN 16:14
156/OFF	30	786.810	|	↓				↓			RESTART
	180/OFF										END

82.077 .5689 0.77 80 73

V_M $(\sqrt{\Delta P})^2$ ΔH T_M T_S

B-38

ENTROPY

PARTICULATE FIELD DATA

COMPANY NAME Greensboro Ind Plating
ADDRESS Greensboro, NC
SAMPLING LOCATION Mist Eliminator Inlet
DATE 3/25/86 TEAM LEADER WSN TECHNICIANS —
RUN NUMBER MT-S2
TIME START 08:32
TIME FINISH 12:06
BAROMETRIC PRESSURE, IN. HG 29.5 STATIC PRESSURE, IN. H_2O -1.33
SAMPLING TRAIN LEAK TEST VACUUM, IN. HG 15 5
SAMPLING TRAIN LEAK RATE, CU. FT./MIN. 0.000 0.000

EQUIPMENT CHECKS

- ✓ PITOTS, PRE-TEST
- ✓ PITOTS, POST-TEST
- NA ORSAT SAMPLING SYSTEM
- NA TEDLAR BAG
- ✓ THERMOCOUPLE @ 62 °F

IDENTIFICATION NUMBERS

REAGENT BOX — NOZZLE S-5 DIAMETER .190
METER BOX N-7 T/C READOUT 23
UMBILICAL U-50 T/C PROBE A-4
SAMPLE BOX 4 ORSAT PUMP NA
PROBE A-4 TEDLAR BAG NA

FILTER #	TARE
B 762	
A 765	
SF 324	

NOMOGRAPH SET-UP NOMOGRAPH # WSN

$\Delta H_@$ 1.75 C FACTOR 0.98
METER TEMP 85 STACK TEMP 70
% MOISTURE 2 REF. ΔP 1.33

SAMPLE POINT	CLOCK TIME, MIN.	DRY GAS METER READING, CU. FT.	PITOT READING (ΔP), IN. H_2O	ORIFICE SETTING (ΔH), IN. H_2O IDEAL	ORIFICE SETTING (ΔH), IN. H_2O ACTUAL	GAS METER TEMP. °F	PUMP VACUUM IN. HG GAUGE	FILTER BOX TEMP. °F	IMP. EXIT TEMP. °F	STACK TEMP. °F	LK. CHECK READINGS
A-4	0/0	788.523	0.60	0.83	0.83	65	3	NA	63	61	
	15	796.62			0.83	68	3		63	61	
	30	804.78			0.83	69	3		63	61	
-7	45/0	812.86	0.65		0.83	71	3		63	62	
	15	821.07			0.83	70	3		63	63	- DOWN 09:25 RESTART 09:40
	30	829.17			0.83	72	3		63	64	
B-1	90/0	837.29	0.60		0.83	74	3		63	65	
	15	845.34			0.83	76	3		63	67	
	30	853.40			0.83	77	3		63	68	- DOWN 10:51 RESTART 11:08
8	135/0	861.47	0.55		0.83	76	3		63	69	
	15	869.57			0.83	78	3		63	70	
	30	877.60			0.83	80	3		63	70	
	180/OFF	885.683									

97.16 .5995 0.83 73 65

V_M $(\sqrt{\Delta P})^2$ ΔH T_M T_S

ENTROPY

PARTICULATE FIELD DATA

COMPANY NAME Greensboro Ind. Platers
ADDRESS Greensboro, NC
SAMPLING LOCATION Mist Elim. Inlet
DATE 3/25/86 TEAM LEADER WSN
BAROMETRIC PRESSURE, IN. HG 29.5
RUN NUMBER MI-S3
TIME START 14:19
TIME FINISH 16:38
TECHNICIANS
STATIC PRESSURE, IN. H_2O -1.35
SAMPLING TRAIN LEAK TEST VACUUM, IN. HG 15 5
SAMPLING TRAIN LEAK RATE, CU. FT./MIN. 0.000 0.000

EQUIPMENT CHECKS

- ✓ PITOTS, PRE-TEST
- ✓ PITOTS, POST-TEST
- NA ORSAT SAMPLING SYSTEM
- NA TEDLAR BAG
- ✓ THERMOCOUPLE @ 71 °F

IDENTIFICATION NUMBERS

REAGENT BOX ____ NOZZLE 5-5 DIAMETER .190
METER BOX N-7 T/C READOUT 23
UMBILICAL U-5 T/C PROBE A-4
SAMPLE BOX 4 ORSAT PUMP NA
PROBE A-4 TEDLAR BAG NA

FILTER #	TARE
B 750	
A 753	
SF 321	

NOMOGRAPH SET-UP

NOMOGRAPH # WSN
ΔH@ 1.75 C FACTOR 0.98
METER TEMP 85 STACK TEMP 70
% MOISTURE 2 REF. ΔP 1.33

SAMPLE POINT	CLOCK TIME, MIN.	DRY GAS METER READING, CU. FT.	PITOT READING (ΔP), IN. H_2O	ORIFICE SETTING (ΔH), IN. H_2O IDEAL	ORIFICE SETTING (ΔH), IN. H_2O ACTUAL	GAS METER TEMP. °F	PUMP VACUUM IN. HG GAUGE	FILTER BOX TEMP. °F	IMP. EXIT TEMP. °F	STACK TEMP. °F	LK. CHECK READINGS
A 3	0/0	894.233	0.58	0.81	0.81	74	3	NA	64	71	
	15	902.23			0.81	76	3		64	72	
	30	910.16			0.81	79	3		64	72	
7	45/0	918.07	0.64		0.81	81	3		64	73	
	15	926.06			0.81	83	3		63	73	DOWN 15:27
	30	934.13			0.81	83	3		63	73	RESTART 15:44
B 1	90/0	942.08	0.60		0.81	84	3		63	73	
	15	950.09			0.81	85	3		63	73	
	30	958.06			0.81	85	3		64	73	STOP 16:38
6	135/0	959.334	~~0.52~~	—				—			
	15/	(123/OFF)	—	—				—			
	30										
	180/OFF										

65.101 .6064 0.81 81 73

V_M $(\sqrt{\Delta P})^2$ ΔH B-40 T_M T_S

ENTROPY

Preliminary Field Data

PLANT NAME Greensboro Industrial Platers

LOCATION ~~MIST ELIMINATOR OUTLET~~ Greensboro, NC

SAMPLING LOCATION MIST ELIMINATOR OUTLET

DUCT DEPTH
FROM INSIDE FAR WALL TO OUTSIDE OF PORT 13 1/2

NIPPLE LENGTH 0

DEPTH OF DUCT 13 1/2

WIDTH (RECTANGULAR DUCT) _____

EQUIVALENT DIAMETER:

$$D_E = \frac{2 \times \text{DEPTH} \times \text{WIDTH}}{\text{DEPTH} + \text{WIDTH}} = \frac{2(\quad)(\quad)}{(\quad + \quad)} = \_\_\_\_$$

DISTANCE FROM PORTS TO NEAREST FLOW DISTURBANCE:	UPSTREAM	DOWNSTREAM
FEET	89"	36"
STACK DIAMETERS	6.5	2.5

STACK AREA= $\left(\frac{23.5}{2}\right)^2 \pi$ = 143.1 IN^2

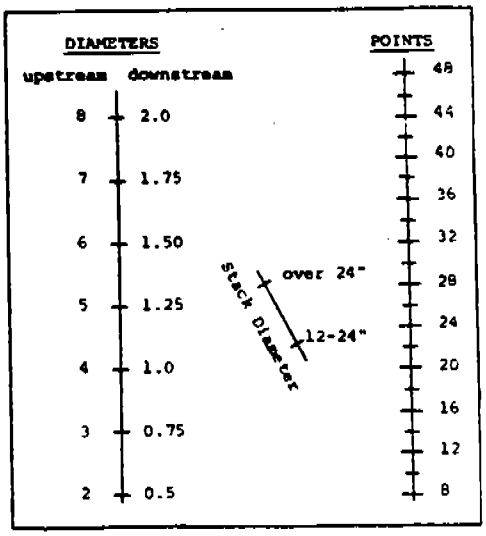

Point	% OF DIAMETER	DISTANCE FROM INSIDE WALL	DISTANCE FROM OUTSIDE OF PORT
1	3.2		1"
2	10.5		1 3/8
3	19.5		2 5/8
4	32.3		4 1/4
5	67.7		9 1/8
6	80.6		10 7/8
7	89.5		12
8	96.8		12 1/2
9			
10			
11			
12			
13			
14			
15			
16			
17			
18			
19			
20			
21			
22			
23			
24			

LOCATION OF TRAVERSE POINTS IN CIRCULAR STACKS

	4	6	8	10	12	14	16	18	20	22	24
1	6.7	4.4	3.2	2.6	2.1	1.8	1.6	1.4	1.3	1.1	1.1
2	25.0	14.6	10.5	8.2	6.7	5.7	4.9	4.4	3.9	3.5	3.2
3	75.0	29.6	19.4	14.6	11.8	9.9	8.5	7.5	6.7	6.0	5.5
4	93.3	70.4	32.3	22.6	17.7	14.6	12.5	10.9	9.7	8.7	7.9
5		85.4	67.7	34.2	25.0	20.1	16.9	14.6	12.9	11.6	10.5
6		95.6	80.6	65.8	35.6	26.9	22.0	18.8	16.5	14.6	13.2
7			89.5	77.4	64.4	36.6	28.3	23.6	20.4	18.0	16.1
8			96.8	85.4	75.0	63.4	37.5	29.6	25.0	21.8	19.4
9				91.8	82.3	73.1	62.5	38.2	30.6	26.2	23.0
10				97.4	88.2	79.9	71.7	61.8	38.8	31.5	27.2
11					93.3	85.4	78.0	70.4	61.2	39.3	32.3
12					97.9	90.1	83.1	76.4	69.4	60.7	39.8
13						94.3	87.5	81.2	75.0	68.5	60.2
14						98.2	91.5	85.4	79.6	73.8	67.7
15							95.1	89.1	83.5	78.2	72.8
16							98.4	92.5	87.1	82.0	77.0
17								95.6	90.3	85.4	80.6
18								98.6	93.3	88.4	83.9
19									96.1	91.3	86.8
20									98.7	94.0	89.5
21										96.5	92.1
22										98.9	94.5
23											96.8
24											98.9

LOCATION OF TRAVERSE POINTS IN RECTANGULAR STACKS

	2	3	4	5	6	7	8	9	10	11	12
1	25.0	16.7	12.5	10.0	8.3	7.1	6.3	5.6	5.0	4.5	4.2
2	75.0	50.0	37.5	30.0	25.0	21.4	18.8	16.7	15.0	13.6	12.5
3		83.3	62.5	50.0	41.7	35.7	31.3	27.8	25.0	22.7	20.8
4			87.5	70.0	58.3	50.0	43.8	38.9	35.0	31.8	29.2
5				90.0	75.0	64.3	56.3	50.0	45.0	40.9	37.5
6					91.7	78.6	68.8	61.1	55.0	50.0	45.8
7						92.9	81.3	72.2	65.0	59.1	54.2
8							93.8	83.3	75.0	68.2	62.5
9								94.4	85.0	77.3	70.8
10									95.0	86.4	79.2
11										95.5	87.5
12											95.8

PARTICULATE FIELD DATA

COMPANY NAME GREESBORO INDUSTRIAL PLATERS
ADDRESS GREENSBORO NC
SAMPLING LOCATION MIST ELIMINATOR OUTLET
DATE 3-18-86 TEAM LEADER ST TECHNICIANS CF
BAROMETRIC PRESSURE, IN. HG 29.2 STATIC PRESSURE, IN. H_2O -1.33
SAMPLING TRAIN LEAK TEST VACUUM, IN. HG 15 20
SAMPLING TRAIN LEAK RATE, CU. FT./MIN. 0.003 0.000

RUN NUMBER M034
TIME START 0836
TIME FINISH 11:50

EQUIPMENT CHECKS

- ✓ PITOTS, PRE-TEST
- ✓ PITOTS, POST-TEST
- — ORSAT SAMPLING SYSTEM
- — TEDLAR BAG
- ✓ THERMOCOUPLE @ 70 °F

IDENTIFICATION NUMBERS

REAGENT BOX ____ NOZZLE 702 DIAMETER .179
METER BOX N-14 T/C READOUT 5
UMBILICAL 4-50 T/C PROBE 7-5
SAMPLE BOX 18 ORSAT PUMP —
PROBE 4-4 TEDLAR BAG —

FILTER #	TARE
—	—

NOMOGRAPH SET-UP NOMOGRAPH # ST

$\Delta H_@$ 1.76 C FACTOR 1.01 - .05 = 0.96
METER TEMP 70 STACK TEMP 70
% MOISTURE 2 REF. ΔP. 1.79

SAMPLE POINT	CLOCK TIME, MIN.	DRY GAS METER READING, CU. FT.	PITOT READING (ΔP), IN. H_2O	ORIFICE SETTING (ΔH), IN. H_2O IDEAL	ACTUAL	GAS METER TEMP. °F	PUMP VACUUM IN. HG GAUGE	FILTER BOX TEMP. °F	IMP. EXIT TEMP. °F	STACK TEMP. °F	LK. CHECK READINGS
A-1	0/0	509.389	3.10	3.19	3.19	52	14	130	50	70	
	4	514.101	3.10	3.19	3.19	52	13	130	50	70	
2	8/0	517.403	3.39	3.48	3.48	60	14	130	50	70	
	12	521.808	3.39	3.48	3.48	62	14	130	48	69	
3	16/0	526.004	3.30	3.39	3.39	64	14	130	48	69	
	20	531.901	3.30	3.39	3.39	64	14	130	48	69	
4	24/0	533.802	3.60	3.70	3.70	62	14	130	48	69	
	28	537.505	3.60	3.70	3.70	62	14	130	48	69	
5	32/0	542.401	3.60	3.70	3.70	64	14	130	50	70	
	36	546.802	4.20	4.31	4.31	64	14	130	50	70	
6	40/0	550.773	4.30	4.42	4.42	60	17	130	55	70	LT 550.77 554.00
	44	558.202	4.30	4.42	4.42	60	13	130	55	70	
7	48/0	563.203	4.41	4.53	4.53	63	13	130	55	70	
	52	568.010	4.50	4.62	4.62	63	13	130	55	70	
8	56/0	572.710	4.40	4.52	4.52	63	13	135	58	72	
	60	578.105	4.40	4.52	4.52	65	13	135	58	72	
B-1	64/0	582.510	3.00	3.08	3.08	64	11	135	58	72	
	4	586.710	3.00	3.08	3.08	64	11	135	58	70	
2	8/0	590.806	3.60	3.70	3.70	69	14	135	58	70	
	12	595.401	3.60	3.70	3.70	69	14	135	58	71	
3	16/0	599.404	4.20	4.32	4.32	69	14	135	58	72	
	20	604.205	4.20	4.32	4.32	69	14	135	58	72	
4	24/0	609.103	4.30	4.42	4.42	73	14	135	58	72	
	28	613.507	4.30	4.42	4.42	77	14	135	58	73	
5	32/0	618.310	4.00	4.11	4.11	78	14	135	58	73	

V_M $(\sqrt{\Delta P})^2$ $\Delta H_{@}$ T_M T_S

ENTROPY

PARTICULATE FIELD DATA

PAGE 2

COMPANY NAME GREENSBORO INDUSTRIAL PLATERS RUN # M 0-1

SAMPLING LOCATION MIST ELIMINATOR OUTLET DATE 3-18-86

SAMPLE POINT	CLOCK TIME, MIN.	DRY GAS METER READING, CU. FT.	PITOT READING (ΔP), IN. H_2O	ORIFICE SETTING (ΔH), IN. H_2O IDEAL	ORIFICE SETTING (ΔH), IN. H_2O ACTUAL	GAS METER TEMP. °F	PUMP VACUUM IN. HG GAUGE	FILTER BOX TEMP. °F	IMP. EXIT TEMP. °F	STACK TEMP. °F	LEAK TEST READINGS
	36	623.902	4.00	4.11	4.11	80	15	135	60	72	
6	48/0	628.006	4.10	4.21	4.21	80	15	135	60	73	
	44	633.107	4.10	4.21	4.21	80	15	135	60	72	
7	50/0	637.908	4.30	4.42	4.42	80	15	135	60	72	
	54	642.605	4.30	4.42	4.42	81	15	135	60	72	
8	58/0	647.401	4.39	4.51	4.51	81	15	135	60	72	
	60	652.410	4.39	4.51	4.51	81	15	135	60	72	
	128/0 FF	657.238									

144.619 V_M $(\sqrt{\Delta P})^2$ $\overline{\Delta H}$ $\overline{T_M}$ $\overline{T_S}$

B-43

ENTROPY

PARTICULATE FIELD DATA

COMPANY NAME GREENSBORO INDUSTRIAL PLATERS — RUN NUMBER MO-2
ADDRESS GREENSBORO NC — TIME START 13:10
SAMPLING LOCATION MIST ELIMINATOR OUTLET — TIME FINISH 15:30
DATE 3-18-86 — TEAM LEADER SK — TECHNICIANS CF
BAROMETRIC PRESSURE, IN. HG 29.2 — STATIC PRESSURE, IN. H_2O -1.48
SAMPLING TRAIN LEAK TEST VACUUM, IN. HG 15 10
SAMPLING TRAIN LEAK RATE, CU. FT./MIN. 0.002 0.000

EQUIPMENT CHECKS

- ✓ PITOTS, PRE-TEST
- ✓ PITOTS, POST-TEST
- — ORSAT SAMPLING SYSTEM
- — TEDLAR BAG
- ✓ THERMOCOUPLE @ ____ °F

IDENTIFICATION NUMBERS

REAGENT BOX ____ NOZZLE 502 DIAMETER .155
METER BOX N-14 T/C READOUT 5
UMBILICAL M-50 T/C PROBE 7-4
SAMPLE BOX 1 ORSAT PUMP —
PROBE ____ TEDLAR BAG —

FILTER #	TARE
—	—

NOMOGRAPH SET-UP NOMOGRAPH # ST

$\Delta H_@$ 1.76 C FACTOR 1.01-0.05 = 0.96
METER TEMP 70 STACK TEMP 70
% MOISTURE 2 REF. ΔP 3.05
K = 0.6032787

SAMPLE POINT	CLOCK TIME, MIN.	DRY GAS METER READING, CU. FT.	PITOT READING (ΔP), IN. H_2O	ORIFICE SETTING (ΔH), IN. H_2O IDEAL	ORIFICE SETTING (ΔH), IN. H_2O ACTUAL	GAS METER TEMP. °F	PUMP VACUUM IN. HG GAUGE	FILTER BOX TEMP. °F	IMP. EXIT TEMP. °F	STACK TEMP. °F	LK. CHECK READINGS
B-1	0/0	657.707	3.30	1.99	1.99	72	7	140	55	65	
	4	660.905	3.30	1.99	1.99	72	7	140	55	66	
2	8/0	664.108	3.80	2.29	2.29	72	8	140	55	66	
	12	668.006	3.80	2.29	2.29	72	8	140	55	70	
3	16/0	671.005	4.30	2.59	2.59	72	8	140	58	72	
	20	674.710	4.30	2.59	2.59	74	8	140	59	72	
4	24/0	678.307	4.60	2.77	2.77	77	8	140	59	72	
	28	682.103	4.50	2.71	2.71	78	8	140	59	72	
5	32/0	685.902	4.30	2.59	2.59	80	8	140	59	74	
	36	689.606	4.20	2.53	2.53	80	8	140	59	74	
6	40/0	693.303	4.39	2.65	2.65	80	8	140	59	73	
	44	697.007	4.39	2.65	2.65	80	8	135	60	73	
7	48/0	700.803	4.40	2.65	2.65	80	8	135	60	73	
	52	704.502	4.40	2.65	2.65	80	8	135	60	74	
8	56/0	708.303	4.20	2.53	2.53	80	9	135	60	75	
	60	711.901	4.30	2.59	2.59	80	9	135	60	75	
A-1	64/0	715.555	2.99	1.80	1.80	80	7	135	60	70	
	4	718.704	2.99	1.80	1.80	80	7	135	60	74	
2	8/0	721.806	3.20	1.93	1.93	80	7	135	60	74	
	12	725.110	3.20	1.93	1.93	80	7	135	60	76	
3	16/0	728.201	3.40	2.05	2.05	78	7	135	60	76	
	20	731.502	3.40	2.05	2.05	78	7	135	60	76	
4	24/0	734.801	3.70	2.23	2.23	78	7	135	60	77	
	28	738.201	3.70	2.23	2.23	78	7	135	60	76	
5	32/0	741.903	4.40	2.65	2.65	77	7	135	60	76	

V_M $(\sqrt{\Delta P})^2$ $\Delta H_{@}$ T_M T_S

ENTROPY

PARTICULATE FIELD DATA

PAGE 2

COMPANY NAME GREENSBORO INDUSTRIAL PLATERS RUN # M.O-2

SAMPLING LOCATION MIST ELIMINATOR OUTLET DATE 3-18-86

SAMPLE POINT	CLOCK TIME, MIN.	DRY GAS METER READING, CU. FT.	PITOT READING (ΔP), IN. H_2O	ORIFICE SETTING (ΔH), IN. H_2O IDEAL	ORIFICE SETTING (ΔH), IN. H_2O ACTUAL	GAS METER TEMP. °F	PUMP VACUUM IN. HG GAUGE	FILTER BOX TEMP. °F	IMP. EXIT TEMP. °F	STACK TEMP. °F	LEAK TEST READINGS
5-	36	745.606	4.40	2.65	2.65	77	7	135	60	76	
6-	40/0	748.602	4.60	2.77	2.77	77	7	135	60	76	
	44	752.208	4.70	2.83	2.83	77	7	135	60	76	
7	48/0	756.105	4.70	2.83	2.83	77	7	135	60	77	
	52	760.202	4.70	2.83	2.83	77	7	135	60	77	
8	56	763.905	4.30	2.59	2.59	77	7	135	60	77	
	60	767.703	4.39	4.65	4.65	77	7	135	60	77	
	128/off	771.268									

V_M $(\sqrt{\Delta P})^2$ $\overline{\Delta H}$ $\overline{T_M}$ $\overline{T_S}$

ENTROPY

PARTICULATE FIELD DATA

COMPANY NAME GREENSBORO INDUSTRIAL PLATERS — RUN NUMBER MO-3
ADDRESS GREENSBORO N.C. — TIME START 0805
SAMPLING LOCATION MIST ELIMINATOR OUTLET — TIME FINISH 10:52
DATE 3-19-86 — TEAM LEADER ST — TECHNICIANS CF
BAROMETRIC PRESSURE, IN. HG 29.2 — STATIC PRESSURE, IN. H_2O -1.70
SAMPLING TRAIN LEAK TEST VACUUM, IN. HG 15 20
SAMPLING TRAIN LEAK RATE, CU. FT./MIN. 0.001 0.001

EQUIPMENT CHECKS

- ✓ PITOTS, PRE-TEST
- ___ PITOTS, POST-TEST
- – ORSAT SAMPLING SYSTEM
- – TEDLAR BAG
- ✓ THERMOCOUPLE @ 80 °F

IDENTIFICATION NUMBERS

REAGENT BOX ___ NOZZLE 702 DIAMETER .179
METER BOX N-14 T/C READOUT 5
UMBILICAL U-50 T/C PROBE 7-5
SAMPLE BOX 18 ORSAT PUMP –
PROBE 4-4 TEDLAR BAG –

FILTER #	TARE
–	–

NOMOGRAPH SET-UP NOMOGRAPH # ST

$\Delta H_@$ 1.76 C FACTOR 1.01 - 0.5 0.96
METER TEMP 70 STACK TEMP 70
% MOISTURE 2 REF. ΔP 179

SAMPLE POINT	CLOCK TIME, MIN.	DRY GAS METER READING, CU. FT.	PITOT READING (ΔP), IN. H_2O	ORIFICE SETTING (ΔH), IN. H_2O IDEAL	ACTUAL	GAS METER TEMP. °F	PUMP VACUUM IN. HG GAUGE	FILTER BOX TEMP. °F	IMP. EXIT TEMP. °F	STACK TEMP. °F	LK. CHECK READINGS
B-1	0/0	771.314	3.60	3.70	3.70	60	14	100	53	80	
	4	775.710	3.60	3.70	3.70	66	14	100	54	80	
2	8/0	780.010	3.40	3.49	3.49	60	14	100	54	81	
	12	784.102	4.00	4.11	4.11	63	15	100	56	81	
3	16/0	788.705	4.20	4.31	4.31	64	15	100	56	82	
	20	793.404	4.20	4.31	4.31	66	15	100	57	80	
4	24/0	798.107	4.00	4.11	4.11	66	15	110	57	79	
	28	802.906	4.00	4.11	4.11	66	15	110	58	80	
5	32/0	807.803	4.20	4.31	4.31	70	15	110	58	80	
	36	812.605	4.20	4.31	4.31	70	15	110	58	80	
6	40/0	817.505	4.30	4.42	4.42	78	15	120	60	80	
	44	822.503	4.30	4.42	4.42	79	15	120	60	80	
7	48/0	826.905	4.20	4.31	4.31	79	15	130	60	80	
	52	831.907	4.10	4.21	4.21	82	15	130	60	80	
8	56/0	836.810	4.20	4.31	4.31	86	15	130	60	80	
	60	841.710	4.20	4.31	4.31	86	15	130	60	80	
A 1	64/0	846.363	2.60	2.67	2.67	80	13	130	60	69	846.512
	4	850.403	3.00	3.08	3.08	82	13	130	60	69	846.363
2	8/0	854.702	3.10	3.19	3.19	86	13	130	60	80	
	12	858.704	3.10	3.19	3.19	86	14	130	62	82	
3	16/0	862.805	3.40	3.49	3.49	86	14	130	62	81	
	20	869.107	3.40	3.49	3.49	86	14	130	62	81	
4	24/0	871.206	3.60	3.70	3.70	88	14	131	62	81	
	28	875.509	3.60	3.70	3.70	88	14	131	62	81	
5	32/0	880.007	4.20	4.31	4.31	84	14	131	62	79	

V_M $(\sqrt{\Delta P})^2$ ΔH T_M T_S

ENTROPY

PARTICULATE FIELD DATA

PAGE 2

COMPANY NAME GREENSBORO INDUSTRIAL PLATERS RUN # MO-3

SAMPLING LOCATION MIST ELIMINATOR OUTLET DATE 3-19-86

SAMPLE POINT	CLOCK TIME, MIN.	DRY GAS METER READING, CU. FT.	PITOT READING (ΔP), IN. H_2O	ORIFICE SETTING (ΔH), IN. H_2O IDEAL	ORIFICE SETTING (ΔH), IN. H_2O ACTUAL	GAS METER TEMP. °F	PUMP VACUUM IN. HG GAUGE	FILTER BOX TEMP. °F	IMP. EXIT TEMP. °F	STACK TEMP. °F	LEAK TEST READINGS
	36	885.302	4.20	4.31	4.31	83	16	130	60	80	
6	40/0	890.304	4.40	4.52	4.52	83	16	130	60	81	
	44	894.602	4.40	4.52	4.52	83	16	130	60	81	
7	48/0	899.005	4.40	4.52	4.52	83	16	130	60	81	
	52	903.803	4.40	4.52	4.52	84	16	130	60	80	
8	56/0	908.704	4.40	4.52	4.52	84	16	130	60	80	
	60	913.210	4.40	4.52	4.52	84	16	130	60	80	
	128/0TF	918.360									
					4.52	78					
		14.844					45.8	765		80	

V_M $(\sqrt{\Delta P})^2$ $\overline{\Delta H}$ B-47 $\overline{T_M}$ $\overline{T_S}$

ENTROPY

PARTICULATE FIELD DATA

COMPANY NAME GREENSBORO INDUSTRIAL PLATERS — RUN NUMBER MO-4
ADDRESS GREENSBORO, NC — TIME START 11:10
SAMPLING LOCATION MIST ELIMINATOR OUTLET — TIME FINISH 16:06
DATE 3-19-86 — TEAM LEADER ST — TECHNICIANS CF
BAROMETRIC PRESSURE, IN. HG 29.2 — STATIC PRESSURE, IN. H_2O -1.40
SAMPLING TRAIN LEAK TEST VACUUM, IN. HG 15 12
SAMPLING TRAIN LEAK RATE, CU. FT./MIN. 0.004 0.000

EQUIPMENT CHECKS

- ✓ PITOTS, PRE-TEST
- ___ PITOTS, POST-TEST
- ✓ ORSAT SAMPLING SYSTEM
- ✓ TEDLAR BAG
- ✓ THERMOCOUPLE @ ___ °F

IDENTIFICATION NUMBERS

REAGENT BOX ___ NOZZLE 502 DIAMETER .155
METER BOX N-14 T/C READOUT 5
UMBILICAL 4-50 T/C PROBE 7-5
SAMPLE BOX 30 ORSAT PUMP —
PROBE 4-5 TEDLAR BAG —

FILTER #	TARE
—	—

NOMOGRAPH SET-UP — NOMOGRAPH # ST

$\Delta H_@$ 1.76 — C FACTOR 1.01 - .05 = 0.96
METER TEMP 70 — STACK TEMP 70
% MOISTURE 2 — REF. ΔP 3.05
K = 0.6032787

SAMPLE POINT	CLOCK TIME, MIN.	DRY GAS METER READING, CU. FT.	PITOT READING (ΔP), IN. H_2O	ORIFICE SETTING (ΔH), IN. H_2O IDEAL	ORIFICE SETTING (ΔH), IN. H_2O ACTUAL	GAS METER TEMP. °F	PUMP VACUUM IN. HG GAUGE	FILTER BOX TEMP. °F	IMP. EXIT TEMP. °F	STACK TEMP. °F	LK. CHECK READINGS
A-1	0/0	918.508	3.00	1.81	1.81	80	7	125	50	80	
	4	921.610	3.00	1.81	1.81	80	7	125	50	80	
2	8/0	924.804	3.10	1.87	1.87	80	7	125	50	81	
	12	928.502	3.10	1.87	1.87	80	8	130	50	80	
3	16/0	931.102	3.40	2.65	2.65	80	8	130	50	81	
	20	934.307	3.40	2.65	2.65	81	8	130	50	81	
4	24/0	937.710	3.60	2.17	2.17	84	8	130	50	81	
	28	941.102	3.60	2.17	2.17	84	8	130	50	81	
5	32/0	944.506	4.40	2.65	2.65	84	8	130	50	82	
	36	947.805	4.40	2.65	2.65	84	8	130	50	82	
6	40/0	951.402	4.60	2.77	2.77	89	10	130	50	82	
	44	955.302	4.60	2.77	2.77	89	10	130	50	82	
7	48/0	958.808	4.60	2.77	2.77	89	10	130	50	82	
	52	962.607	4.60	2.77	2.77	92	10	130	50	82	
8	56/0	966.403	4.40	2.65	2.65	90	10	130	50	81	
	60	970.202	4.40	2.65	2.65	90	10	130	50	81	
B-1	64/0	974.085	2.99	1.80	1.80	84	10	130	50	80	
	4	977.506	2.99	1.80	1.80	64	8	130	50	76	
2	8/0	980.603	3.40	2.05	2.05	66	8	130	55	77	
	12	983.808	3.40	2.05	2.05	66	8	130	55	77	
3	16/0	987.210	4.00	2.41	2.41	70	8	130	55	79	
	20	990.604	4.00	2.41	2.41	70	8	130	55	79	
4	24/0	994.303	4.40	2.65	2.65	70	8	130	55	79	
	28	997.904	4.40	2.65	2.65	72	8	130	55	79	
5	32/0	001.903	4.00	2.41	2.41	74	8	130	55	79	

V_M — $(\sqrt{\Delta P})^2$ — ΔH B-48 T_M — T_S

ENTROPY

PARTICULATE FIELD DATA

PAGE 2

COMPANY NAME GREENSBORO INDUSTRIAL PLATERS RUN # MO-4

SAMPLING LOCATION MIST ELIMINATOR OUTLET DATE 3-19-86

SAMPLE POINT	CLOCK TIME, MIN.	DRY GAS METER READING, CU. FT.	PITOT READING (ΔP), IN. H_2O	ORIFICE SETTING (ΔH), IN. H_2O IDEAL	ORIFICE SETTING (ΔH), IN. H_2O ACTUAL	GAS METER TEMP. °F	PUMP VACUUM IN. HG GAUGE	FILTER BOX TEMP. °F	IMP. EXIT TEMP. °F	STACK TEMP. °F	LEAK TEST READINGS
	36	005.210	4.00	2.41	2.41	76	9	130	55	79	
6	40/0	008.807	4.20	2.53	2.53	78	9	130	55	79	
	44	012.510	4.20	2.53	2.53	78	9	130	55	79	
7	48/0	016.210	4.20	2.53	2.53	78	9	130	55	79	
	52	019.804	4.20	2.53	2.53	78	9	130	55	79	
8	56/0	023.502	4.20	2.53	2.53	78	9	130	55	79	
	60	027.103	4.20	2.53	2.53	78	9	130	55	79	
	128/EFF	030.797									
					2.50	70					
		112.25									
							45.8019			80	

V_M $(\sqrt{\Delta P})^2$ $\overline{\Delta H}$ $\overline{T_M}$ $\overline{T_S}$

ENTROPY

PARTICULATE FIELD DATA

COMPANY NAME Greensboro Ind. Platers
ADDRESS Greensboro, NC
SAMPLING LOCATION Mist Elim. Stack
DATE 3/25/86
TEAM LEADER WSN
TECHNICIANS CF
RUN NUMBER MO-5A
TIME START 08:31
TIME FINISH 10:54
BAROMETRIC PRESSURE, IN. HG 29.5
STATIC PRESSURE, IN. H_2O -1.75
SAMPLING TRAIN LEAK TEST VACUUM, IN. HG 15 10
SAMPLING TRAIN LEAK RATE, CU. FT./MIN. 0.000 0.000

EQUIPMENT CHECKS

- ✓ PITOTS, PRE-TEST
- ✓ PITOTS, POST-TEST
- NA ORSAT SAMPLING SYSTEM
- NA TEDLAR BAG
- ✓ THERMOCOUPLE @ 73 °F

IDENTIFICATION NUMBERS

REAGENT BOX ____ NOZZLE 103 DIAMETER .177
METER BOX N.14 T/C READOUT #5
UMBILICAL U.85.2 T/C PROBE 7.4
SAMPLE BOX 12 ORSAT PUMP NA
PROBE 4.1 TEDLAR BAG NA

FILTER #	TARE

NOMOGRAPH SET-UP NOMOGRAPH # WSN

$\Delta H_@$ 1.76 C FACTOR 0.98
METER TEMP 80 STACK TEMP 75
% MOISTURE 2 REF. ΔP 1.80
K = 1.022

SAMPLE POINT	CLOCK TIME, MIN.	DRY GAS METER READING, CU. FT.	PITOT READING (ΔP), IN. H_2O	ORIFICE SETTING (ΔH), IN. H_2O IDEAL	ORIFICE SETTING (ΔH), IN. H_2O ACTUAL	GAS METER TEMP. °F	PUMP VACUUM IN. HG GAUGE	FILTER BOX TEMP. °F	IMP. EXIT TEMP. °F	STACK TEMP. °F	LK. CHECK READINGS
B 5	0/0	339.575	4.30	4.40	4.40	62	9	NA	63	74	
	10	351.46	4.30	4.40	4.40	71	9		63	74	
	20	363.57	4.28	4.38	4.38	78	9		63	74	
	30	375.71	4.30	4.40	4.40	79	9		63	75	
	40	387.73	4.30	4.40	4.40	81	9		63	75	
	50	399.84	4.25	4.44	4.44	82	9		64	75	
A 4	60/0	412.03	4.65	4.75	4.75	75	9		65	76	DOWN 09:32 09:53
	10	424.62	4.70	4.80	4.80	82	9		65	76	
	20	437.34	4.70	4.80	4.80	86	9		65	76	
	30	450.06	4.70	4.80	4.80	87	9		65	76	
	40	462.74	4.60	4.70	4.70	88	9		65	76	
	50	475.48	4.60	4.70	4.70	89	9		65	76	
	120/OFF	487.820									

V_M $(\sqrt{\Delta P})^2$ $\Delta H_{@}$ T_M T_S

ENTROPY

PARTICULATE FIELD DATA

COMPANY NAME Greensboro Ind. Platers
ADDRESS Greensboro, NC
SAMPLING LOCATION Mist Eliminator Stack
DATE 3/26/86 TEAM LEADER WSN TECHNICIANS CF
BAROMETRIC PRESSURE, IN. HG 29.5 STATIC PRESSURE, IN. H_2O -1.73
SAMPLING TRAIN LEAK TEST VACUUM, IN. HG 15 7
SAMPLING TRAIN LEAK RATE, CU. FT./MIN. 0.002 0.000

RUN NUMBER MO-5B
TIME START 08:34
TIME FINISH 10:55

EQUIPMENT CHECKS

- ✓ PITOTS, PRE-TEST
- ✓ PITOTS, POST-TEST
- NA ORSAT SAMPLING SYSTEM
- NA TEDLAR BAG
- ✓ THERMOCOUPLE @ 73 °F

IDENTIFICATION NUMBERS

REAGENT BOX ____ NOZZLE 703 DIAMETER .169
METER BOX R.2 T/C READOUT #23
UMBILICAL U.25.1 T/C PROBE 6.4
SAMPLE BOX 16 ORSAT PUMP NA
PROBE 4.3 TEDLAR BAG NA

FILTER #	TARE

NOMOGRAPH SET-UP NOMOGRAPH # WSN

$\Delta H_@$ 1.75 C FACTOR 0.98
METER TEMP 80 STACK TEMP 75
% MOISTURE 2 REF. ΔP. 2.15

SAMPLE POINT	CLOCK TIME, MIN.	DRY GAS METER READING, CU. FT.	PITOT READING (ΔP), IN. H_2O	ORIFICE SETTING (ΔH), IN. H_2O IDEAL	ORIFICE SETTING (ΔH), IN. H_2O ACTUAL	GAS METER TEMP. °F	PUMP VACUUM IN. HG GAUGE	FILTER BOX TEMP. °F	IMP. EXIT TEMP. °F	STACK TEMP. °F	LK. CHECK READINGS
A 2	0/0	809.402	4.60	3.98	3.98	72	6	NA	62	73	
	10	820.57	4.58	3.95	3.95	80	6		63	73	
	20	831.77	4.65	4.02	4.02	92	6		63	74	
	30	842.94	4.40	3.82	3.82	95	6		64	74	
	40	854.08	4.40	3.82	3.82	98	6		64	75	
	50	865.36	4.40	3.82	3.82	98	6		64	75	
B 7	60/0	876.51	4.60	3.98	3.98	82	6		64	74	DOWN 09:32 09:54
	10	887.99	4.40	3.82	3.82	92	6		64	75	
	20	899.38	4.30	3.78	3.78	96	6		64	75	
	30	910.69	4.30	3.78	3.78	102	6		64	75	
	40	921.97	4.20	3.65	3.65	104	6		64	75	
	50	933.29	4.20	3.65	3.65	109	6		64	77	
	120/OFF	944.420									
		[illegible]		[illegible]		93		42 [illegible]	75	78	

V_M $\overline{(\sqrt{\Delta P})^2}$ ΔH B-51T_M T_S

ENTROPY

B (M.C)

PARTICULATE FIELD DATA

COMPANY NAME Greensboro Ind. Platers
RUN NUMBER MO-6A
ADDRESS Greensboro NC
TIME START 11:50
SAMPLING LOCATION Mist Elim. Stack
TIME FINISH 13:56
DATE 3/26/86
TEAM LEADER WSN
TECHNICIANS
BAROMETRIC PRESSURE, IN. HG 29.5
STATIC PRESSURE, IN. H_2O -1.73
SAMPLING TRAIN LEAK TEST VACUUM, IN. HG 15 12
SAMPLING TRAIN LEAK RATE, CU. FT./MIN. 0.000 0.000

EQUIPMENT CHECKS

- ✓ PITOTS, PRE-TEST
- ✓ PITOTS, POST-TEST
- NA ORSAT SAMPLING SYSTEM
- NA TEDLAR BAG
- ✓ THERMOCOUPLE @ 77 °F

IDENTIFICATION NUMBERS

REAGENT BOX ____ NOZZLE 103 DIAMETER .177
METER BOX N.14 T/C READOUT #5
UMBILICAL U.25.2 T/C PROBE 7.4
SAMPLE BOX 12 ORSAT PUMP NA
PROBE 4.1 TEDLAR BAG NA

FILTER #	TARE

NOMOGRAPH SET-UP NOMOGRAPH # WSN

$\Delta H_@$ 1.76 C FACTOR 0.98
METER TEMP 90 STACK TEMP 75
% MOISTURE 2 REF. ΔP. 1.80
1.022

SAMPLE POINT	CLOCK TIME, MIN.	DRY GAS METER READING, CU. FT.	PITOT READING (ΔP), IN. H_2O	ORIFICE SETTING (ΔH), IN. H_2O IDEAL	ORIFICE SETTING (ΔH), IN. H_2O ACTUAL	GAS METER TEMP. °F	PUMP VACUUM IN. HG GAUGE	FILTER BOX TEMP. °F	IMP. EXIT TEMP. °F	STACK TEMP. °F	LK. CHEC READINGS
A 4	0/0	488.438	4.50	4.60	4.60	73	11	NA	63	77	
	10	501.02	4.45	4.55	4.55	79	11		64	77	
	20	513.45	4.60	4.70	4.70	83	11		65	77	
	30	525.86	4.60	4.70	4.70	89	11		65	77	
	40	538.73	4.50	4.60	4.60	89	11		65	77	
	50	550.88	4.50	4.60	4.60	90	11		65	77	
B 5	60/0	563.22	4.20	4.29	4.29	83	11		65	77	
	10	575.47	4.30	4.40	4.40	90	11		65	77	
	20	587.42	4.30	4.40	4.40	92	11		65	78	
	30	599.54	4.30	4.40	4.40	93	11		65	79	
	40	611.63	4.30	4.40	4.40	93	11		65	79	
	50	624.32	4.30	4.40	4.40	92	11		65	78	
	120/off	635.922									
		[illegible]			[illegible]	[illegible]		[illegible]	[illegible]	[illegible]	

V_M $(\sqrt{\Delta P})^2$ ΔH B-52 T_M T_S

ENTROPY

PARTICULATE FIELD DATA

COMPANY NAME Greensboro Ind. Plater
ADDRESS Greensboro, NC
SAMPLING LOCATION Mist Elim. Stack
DATE 3/26/86 TEAM LEADER WSN TECHNICIANS

RUN NUMBER MO-6B
TIME START 11:51
TIME FINISH 13:57

BAROMETRIC PRESSURE, IN. HG 29.5 STATIC PRESSURE, IN. H_2O -1.75
SAMPLING TRAIN LEAK TEST VACUUM, IN. HG 15 8
SAMPLING TRAIN LEAK RATE, CU. FT./MIN. 0.002 0.000

EQUIPMENT CHECKS

✓ PITOTS, PRE-TEST
✓ PITOTS, POST-TEST
NA ORSAT SAMPLING SYSTEM
NA TEDLAR BAG
✓ THERMOCOUPLE @ 77 °F

IDENTIFICATION NUMBERS

REAGENT BOX — NOZZLE 702 DIAMETER .179
METER BOX R.2 T/C READOUT # 23
UMBILICAL U.25.1 T/C PROBE 4.5
SAMPLE BOX 14 ORSAT PUMP NA
PROBE 4-4 TEDLAR BAG NA

FILTER #	TARE

NOMOGRAPH SET-UP NOMOGRAPH # WSN

$\Delta H_@$ 1.75 C FACTOR 1.00
METER TEMP 100 STACK TEMP 75
% MOISTURE 2 REF. ΔP 1.68

SAMPLE POINT	CLOCK TIME, MIN.	DRY GAS METER READING, CU. FT.	PITOT READING (ΔP), IN. H_2O	ORIFICE SETTING (ΔH), IN. H_2O IDEAL	ORIFICE SETTING (ΔH), IN. H_2O ACTUAL	GAS METER TEMP. °F	PUMP VACUUM IN. HG GAUGE	FILTER BOX TEMP. °F	IMP. EXIT TEMP. °F	STACK TEMP. °F	LK. CHECK READINGS
B 5	0/0	944.712	4.20	4.68	4.68	82	7	NA	64	77	
	10	957.09	4.20	4.68	4.68	91	7		64	77	
	20	969.63	4.10	4.55	4.55	101	7		64	77	
	30	981.76	4.10	4.55	4.55	103	7		64	78	
	40	994.35	4.15	4.62	4.62	106	7		64	77	
	50	1006.34	4.15	4.62	4.62	108	7		64	77	
A 4	60/0	18.71	3.70	4.06	4.06	96	7		64	77	
	10	30.43	3.80	4.20	4.20	104	7		64	75	
	20	42.18	3.80	4.20	4.20	105	7		64	76	
	30	53.63	4.10	4.55	4.55	106	7		64	77	
	40	65.45	4.20	4.68	4.68	107	7		65	79	
	50	78.03	4.10	4.55	4.55	108	7		65	79	
	60/OFF	1090.646									

V_M $(\sqrt{\Delta P})^2$ ΔH T_M T_S

ENTROPY

PARTICULATE FIELD DATA

COMPANY NAME Greensboro Ind. Platers
ADDRESS Greensboro, NC
SAMPLING LOCATION Unit Chem. Stack
DATE 3/26/86 TEAM LEADER WSN TECHNICIANS
BAROMETRIC PRESSURE, IN. HG 29.5 STATIC PRESSURE, IN. H_2O -1.70
SAMPLING TRAIN LEAK TEST VACUUM, IN. HG 15 12
SAMPLING TRAIN LEAK RATE, CU. FT./MIN. 0.000 0.000

RUN NUMBER MO-7A
TIME START 14:08
TIME FINISH 16:28

EQUIPMENT CHECKS

✓ PITOTS, PRE-TEST
___ PITOTS, POST-TEST
NA ORSAT SAMPLING SYSTEM
NA TEDLAR BAG
✓ THERMOCOUPLE @ 80 °F

IDENTIFICATION NUMBERS

REAGENT BOX ___ NOZZLE 101 DIAMETER .177
METER BOX N.14 T/C READOUT #5
UMBILICAL U.25.2 T/C PROBE 7.4
SAMPLE BOX 12 ORSAT PUMP NA
PROBE 4.1 TEDLAR BAG NA

FILTER #	TARE

NOMOGRAPH SET-UP NOMOGRAPH # WSN

$\Delta H_@$ 1.76 C FACTOR 0.98
METER TEMP 90 STACK TEMP 75
% MOISTURE 2 REF. ΔP. 1.80
1.022

SAMPLE POINT	CLOCK TIME, MIN.	DRY GAS METER READING, CU. FT.	PITOT READING (ΔP), IN. H_2O	ORIFICE SETTING (ΔH), IN. H_2O IDEAL	ORIFICE SETTING (ΔH), IN. H_2O ACTUAL	GAS METER TEMP. °F	PUMP VACUUM IN. HG GAUGE	FILTER BOX TEMP. °F	IMP. EXIT TEMP. °F	STACK TEMP. °F	LK. CHECK READINGS
B·4	0/0	636.045	4.70	4.80	4.80	84	11	NA	63	80	
	10	648.53	4.70	4.80	4.80	88	11		63	80	
	20	661.20	4.70	4.80	4.80	88	11		64	80	
	30	673.88	4.70	4.80	4.80	90	11		64	80	
	40	686.62	4.70	4.80	4.80	92	11		64	80	
	50	699.63	4.70	4.80	4.80	92	11		64	79	
A·4	60/0	712.99	4.30	4.40	4.40	85	11		64	79	DOWN 15:11 15:27
	10	724.28	4.35	4.45	4.45	92	11		64	80	
	20	736.53	4.30	4.40	4.40	94	11		64	79	
	30	748.60	4.25	4.34	4.34	93	11		64	79	
	40	760.70	4.30	4.40	4.40	94	11		65	80	
	50	772.98	4.35	4.45	4.45	92	11		65	80	
	120/OFF	784.763									
		[illegible]			[illegible]	[illegible]		[illegible]	[illegible]	[illegible]	

V_M $(\sqrt{\Delta P})^2$ ΔH B-54 T_M T_S

ENTROPY

PARTICULATE FIELD DATA

COMPANY NAME Greensboro Ind Platers
ADDRESS Greensboro NC
SAMPLING LOCATION Mist Elim. Stack
DATE 3/26/86 TEAM LEADER WSN TECHNICIANS
BAROMETRIC PRESSURE, IN. HG 29.5 STATIC PRESSURE, IN. H_2O -1.72
SAMPLING TRAIN LEAK TEST VACUUM, IN. HG 15 8
SAMPLING TRAIN LEAK RATE, CU. FT./MIN. 0.002 0.000

RUN NUMBER MO-7B
TIME START 14:09
TIME FINISH 16:29

EQUIPMENT CHECKS

✓ PITOTS, PRE-TEST
PITOTS, POST-TEST
NA ORSAT SAMPLING SYSTEM
NA TEDLAR BAG
✓ THERMOCOUPLE @ 80 °F

IDENTIFICATION NUMBERS

REAGENT BOX — NOZZLE 703 DIAMETER .169
METER BOX R.2 T/C READOUT #23
UMBILICAL U.25.1 T/C PROBE
SAMPLE BOX 14 ORSAT PUMP NA
PROBE 4.2 TEDLAR BAG NA

FILTER #	TARE

NOMOGRAPH SET-UP NOMOGRAPH # WSN

$\Delta H_@$ 1.75 C FACTOR 1.00
METER TEMP 100 STACK TEMP 75
% MOISTURE 2 REF. ΔP 2.10

SAMPLE POINT	CLOCK TIME, MIN.	DRY GAS METER READING, CU. FT.	PITOT READING (ΔP), IN. H_2O	ORIFICE SETTING (ΔH), IN. H_2O IDEAL	ACTUAL	GAS METER TEMP. °F	PUMP VACUUM IN. HG GAUGE	FILTER BOX TEMP. °F	IMP. EXIT TEMP. °F	STACK TEMP. °F	LK. CHECK READINGS
A-4	0/0	90.722	4.40	3.85	3.85	92	7	NA	63	77	
	10	102.20	4.50	3.92	3.92	99	7		63	79	
	20	113.90	4.40	3.85	3.85	106	7		63	80	
	30	125.98	4.40	3.85	3.85	108	7		63	80	
	40	137.67	4.50	3.92	3.92	109	7		63	80	
	50	149.74	4.40	3.85	3.85	110	7		63	79	
B-4	60/0	161.51	4.80	4.20	4.20	94	7		63	80	DOWN 15:11 15:27
	10	173.38	4.50	3.92	3.92	104	7		63	80	
	20	184.82	4.50	3.92	3.92	108	7		63	80	
	30	196.29	4.80	4.20	4.20	109	7		63	80	
	40	208.13	4.70	4.10	4.10	110	7		63	80	
	50	220.00	4.70	4.10	4.10	110	7		63	80	
	120/OFF	231.839									

V_M $(\sqrt{\Delta P})^2$ ΔH B-55 T_M T_S

ENTROPY

PARTICULATE FIELD DATA

COMPANY NAME GREENSBORO INDUSTRIAL PLATERS — RUN NUMBER MO - S1
ADDRESS GREENSBORO NC — TIME START 13:04
SAMPLING LOCATION MIST ELIMINATOR OUTLET — TIME FINISH 18:14
DATE 3-24-86 — TEAM LEADER ST — TECHNICIANS
BAROMETRIC PRESSURE, IN. HG 29.5 — STATIC PRESSURE, IN. H_2O -1.76
SAMPLING TRAIN LEAK TEST VACUUM, IN. HG 15
SAMPLING TRAIN LEAK RATE, CU. FT./MIN. 0.000

EQUIPMENT CHECKS

- ✓ PITOTS, PRE-TEST
- — PITOTS, POST-TEST
- — ORSAT SAMPLING SYSTEM
- — TEDLAR BAG
- — THERMOCOUPLE @ ____ °F

IDENTIFICATION NUMBERS

REAGENT BOX ____ NOZZLE 4-6 DIAMETER .126
METER BOX N-14 T/C READOUT 5
UMBILICAL 450 T/C PROBE 4-11
SAMPLE BOX 18 ORSAT PUMP —
PROBE A-5 TEDLAR BAG —

FILTER #	TARE
B 734	SF 317
A 737	

NOMOGRAPH SET-UP — NOMOGRAPH # ST

$\Delta H_@$ 1.76 — C FACTOR 1.05 - 05:1.00
METER TEMP 80 — STACK TEMP 70
% MOISTURE 2 — REF. ΔP 7
K = .263

SAMPLE POINT	CLOCK TIME, MIN.	DRY GAS METER READING, CU. FT.	PITOT READING (ΔP), IN. H_2O	ORIFICE SETTING (ΔH), IN. H_2O IDEAL	ORIFICE SETTING (ΔH), IN. H_2O ACTUAL	GAS METER TEMP. °F	PUMP VACUUM IN. HG GAUGE	FILTER BOX TEMP. °F	IMP. EXIT TEMP. °F	STACK TEMP. °F	LK. CHECK READINGS
B-2	0/0	031.772	3.80	1.05	1.05	70	2	—	60	76	
	15	040.509	↓	↓	↓	73	2	—	58	76	
	30	049.602	↓	↓	↓	72	2	—	55	78	
	45	050.510	↓	↓	↓	76	2	—	56	76	
B-8	60/0	067.405	4.20	↓	↓	77	2	—	58	75	
	15	076.009	↓	↓	↓	78	2	—	58	73	
	30	085.005	↓	↓	↓	76	4	—	58	76	
	45	093.845	↓	↓	↓	77	4	—	60	73	
A-4	120/0	102.619	3.70	↓	↓	79	4	—	60	73	
	15	111.701	↓	↓	↓	79	3	—	60	77	
stop 2 hr 32:32	30	121.003	↓	↓	↓	78	3	—	60	79	
1	45	152/off									
~~A-8~~	~~180/0~~		~~4.30~~								
	~~15~~										
	~~30~~										
	~~45~~										
	~~240/off~~										

89.231 — V_M
3.915 — $(\sqrt{\Delta P})^2$
1.05 — ΔH
76 — $B-56T_M$
76 — T_S

ENTROPY

PARTICULATE FIELD DATA

COMPANY NAME Greensboro Industrial Platers
ADDRESS Greensboro NC
SAMPLING LOCATION Mist Eliminator Outlet
DATE 3-25-86 TEAM LEADER ST TECHNICIANS
BAROMETRIC PRESSURE, IN. HG 29.5 STATIC PRESSURE, IN. H_2O -1.73
SAMPLING TRAIN LEAK TEST VACUUM, IN. HG 15
SAMPLING TRAIN LEAK RATE, CU. FT./MIN. 0.005

RUN NUMBER MO-S-2
TIME START 0832
TIME FINISH 13:39

EQUIPMENT CHECKS

- — PITOTS, PRE-TEST
- — PITOTS, POST-TEST
- — ORSAT SAMPLING SYSTEM
- — TEDLAR BAG
- ✓ THERMOCOUPLE @ ____ °F

IDENTIFICATION NUMBERS

REAGENT BOX ____ NOZZLE 4-6 DIAMETER .126
METER BOX N-14 T/C READOUT 5
UMBILICAL 4-50 T/C PROBE 4-11
SAMPLE BOX 18 ORSAT PUMP —
PROBE A-3 TEDLAR BAG —

FILTER #	TARE
B 766	SF 325
A 769	

NOMOGRAPH SET-UP NOMOGRAPH # SF

$\Delta H_@$ 1.76 C FACTOR 1.05 - .05 = 1.00
METER TEMP 80 STACK TEMP 70
% MOISTURE 2 REF. ΔP 7
K = .263

SAMPLE POINT	CLOCK TIME, MIN.	DRY GAS METER READING, CU. FT.	PITOT READING (ΔP), IN. H_2O	ORIFICE SETTING (ΔH), IN. H_2O IDEAL	ORIFICE SETTING (ΔH), IN. H_2O ACTUAL	GAS METER TEMP. °F	PUMP VACUUM IN. HG GAUGE	FILTER BOX TEMP. °F	IMP. EXIT TEMP. °F	STACK TEMP. °F	LK. CHECK READINGS
A-4	0/0	123.002	3.88	1.07	1.07	60	2	—	40	67	
	15	131.905				62	2	-	40	67	
	30	140.407				66	2	-	40	67	
	45	149.603				67	2	—	40	67	
A-8	60/0	158.308	4.20			66	5	—	45	68	
	15	167.210				69	5	-	48	67	
	30	176.005				70	5	—	48	67	
	45	185.205				76	5	—	48	68	
B-2	120/0	194.335	3.79			74	5		53	67	
	15	203.602				76	5	-	58	69	
	30	212.507				78	5	-	60	77	
	45	221.505				80	5	—	60	78	
B-8	180/0	230.505	4.36			81	5	-	60	77	
	15	239.401				82	5	-	60	77	
	30	248.208				79	5	-	62	77	
	45	257.104				80	5	-	62	79	
	240/off	266.031									
		[illegible]						4.[illegible]		71	

V_M	$(\sqrt{\Delta P})^2$	$\Delta H_{@}$	T_M	T_S
143.029	4.054	1.07	73	71

ENTROPY

PARTICULATE FIELD DATA

COMPANY NAME GREENSBORO INDUSTRIAL PLATERS RUN NUMBER Mo-S-3
ADDRESS GREENSBORO N.C. TIME START 14:20
SAMPLING LOCATION MIST ELIMINATOR OUTLET TIME FINISH 16:38
DATE 3.25.86 TEAM LEADER ST TECHNICIANS
BAROMETRIC PRESSURE, IN. HG 29.5 STATIC PRESSURE, IN. H_2O -1.73
SAMPLING TRAIN LEAK TEST VACUUM, IN. HG 15
SAMPLING TRAIN LEAK RATE, CU. FT./MIN. 0.000

EQUIPMENT CHECKS

___ PITOTS, PRE-TEST
___ PITOTS, POST-TEST
___ ORSAT SAMPLING SYSTEM
___ TEDLAR BAG
___ THERMOCOUPLE @ ___ °F

IDENTIFICATION NUMBERS

REAGENT BOX - NOZZLE 4-6 DIAMETER .126
METER BOX N-14 T/C READOUT 5
UMBILICAL 4-50 T/C PROBE 4-11
SAMPLE BOX 18 ORSAT PUMP —
PROBE A-3 TEDLAR BAG —

FILTER #	TARE
B-702	ST 309
A-705	

NOMOGRAPH SET-UP NOMOGRAPH # ST

$\Delta H_@$ 1.76 C FACTOR 1.05-.05 = 1.00
METER TEMP 70 STACK TEMP 70
% MOISTURE 2 REF. ΔP. 7

SAMPLE POINT	CLOCK TIME, MIN.	DRY GAS METER READING, CU. FT.	PITOT READING (ΔP), IN. H_2O	ORIFICE SETTING (ΔH), IN. H_2O IDEAL	ACTUAL	GAS METER TEMP. °F	PUMP VACUUM IN. HG GAUGE	FILTER BOX TEMP. °F	IMP. EXIT TEMP. °F	STACK TEMP. °F	LK. CHEC READINGS
A-4	0/0	266.115	3.88	1.07	1.07	74	3	—	50	76	
	15	274.999				76	3	-	50	77	
	30	283.901				77	5	-	50	79	
	45	292.804				80	5	-	50	80	
A-8	60/0	301.706	4.20			82	5	-	50	80	
	15	310.610				80	5	-	55	80	
	30	319.709				80	5	-	55	78	
	45	328.610				79	5	-	55	78	
B 2	120/0	337.604	3.79			80	5	-	55	78	
123/OFF	15	339.318									
	~~30~~	123/OFF									
	~~45~~										
~~B-8~~	~~180/0~~		~~4.36~~								
	~~15~~										
	~~30~~										
	45	73.203			1.07	79		1.5979		78	
	~~240~~										

73.203 4.010 1.07 79 78

V_M $(\sqrt{\Delta P})^2$ ΔH B-58 T_M T_S

ENTROPY

LABORATORY ANALYSIS OF MOISTURE CATCH

Plant Name GREENSBORO INDUSTRIAL PLATERS **EEI Ref. #** 3503

Sampling Location COATING TANK #5 - OUTLET

Date Received _____ **Date Analyzed** _____ **Reagent Box(es)** _____

Run Number	TE-1A	TE-1B	
Run Date	3/18	3/18	
Reagent (H_2O):			
Final Weight, g.	298.0	302.0	
Tared Weight, g.	300.0	300.0	
CONDENSED WATER, g.	-2.0	2.0	
Silica Gel:			
Final Weight, g.	216.0	215.0	
Tared Weight, g.	200.0	200.0	
ABSORBED WATER, g.	16.0	15.0	
TOTAL WATER COLLECTED, g.	14.0	17.0	

Sampling Location COATING TANK #5 - OUTLET

Date Received _____ **Date Analyzed** _____ **Reagent Box(es)** _____

Run Number	TE-2A	TE-2B	
Run Date	3/18	3/18	
Reagent (H_2O):			
Final Weight, g.	300.0	304.0	
Tared Weight, g.	300.0	300.0	
CONDENSED WATER, g.	0.0	4.0	
Silica Gel:			
Final Weight, g.	215.0	215.0	
Tared Weight, g.	200.0	200.0	
ABSORBED WATER, g.	15.0	15.0	
TOTAL WATER COLLECTED, g.	15.0	19.0	

LABORATORY ANALYSIS OF MOISTURE CATCH

Plant Name GREENSBORO INDUSTRIAL PLATERS EEI Ref. # 3803

Sampling Location COATING TANK #5 - OUTLET

Date Received _____ Date Analyzed _____ Reagent Box(es) _____

Run Number	TE-3A	TE-3B	
Run Date	3/18	3/18	
Reagent (H_2O):			
Final Weight, g.	306.0	307.0	
Tared Weight, g.	300.0	300.0	
CONDENSED WATER, g.	6.0	7.0	
Silica Gel:			
Final Weight, g.	214.0	213.0	
Tared Weight, g.	200.0	200.0	
ABSORBED WATER, g.	14.0	13.0	
TOTAL WATER COLLECTED, g.	20.0	20.0	

Sampling Location COATING TANK #5 - OUTLET

Date Received _____ Date Analyzed _____ Reagent Box(es) _____

Run Number	TE-4A	TE-4B	
Run Date	3/19	3/19	
Reagent (H_2O):			
Final Weight, g.	316.0	305.0	
Tared Weight, g.	300.0	300.0	
CONDENSED WATER, g.	16.0	5.0	
Silica Gel:			
Final Weight, g.	213.5	216.5	
Tared Weight, g.	200.0	200.0	
ABSORBED WATER, g.	13.5	16.5	
TOTAL WATER COLLECTED, g.	29.5	21.5	

LABORATORY ANALYSIS OF MOISTURE CATCH

Plant Name GREENSBORO INDUSTRIAL PLATERS EEI Ref. # 3503

Sampling Location COATING TANK #5 - OUTLET

Date Received _____ Date Analyzed _____ Reagent Box(es) _____

Run Number	TE-5A	TE-5B	
Run Date	3/19	3/19	
Reagent (H_2O):			
Final Weight, g.	306.0	308.0	
Tared Weight, g.	300.0	300.0	
CONDENSED WATER, g.	6.0	8.0	
Silica Gel:			
Final Weight, g.	215.0	217.5	
Tared Weight, g.	200.0	200.0	
ABSORBED WATER, g.	15.0	17.5	
TOTAL WATER COLLECTED, g.	21.0	25.5	

Sampling Location COATING TANK #5 OUTLET

Date Received _____ Date Analyzed _____ Reagent Box(es) _____

Run Number	TE-6A	TE-6B	
Run Date	3/19	3/19	
Reagent (H_2O):			
Final Weight, g.	300.0	304.0	
Tared Weight, g.	300.0	300.0	
CONDENSED WATER, g.	0.0	4.0	
Silica Gel:			
Final Weight, g.	213.5	217.5	
Tared Weight, g.	200.0	200.0	
ABSORBED WATER, g.	13.5	17.5	
TOTAL WATER COLLECTED, g.	13.5	21.5	

LABORATORY ANALYSIS OF MOISTURE CATCH

Plant Name GREENSBORO INDUSTRIAL PLATERS EEI Ref. # 3503

Sampling Location COATING TANK #5 EXHAUST

Date Received _____ Date Analyzed _____ Reagent Box(es) _____

Run Number	TE7A	TE7B	
Run Date	3/24	3/24	
Reagent (H_2O):			
Final Weight, g.	198.0	200.0	
Tared Weight, g.	200.0	200.0	
CONDENSED WATER, g.	-2.0	0.0	
Silica Gel:			
Final Weight, g.	212.5	216.5	
Tared Weight, g.	200.0	200.0	
ABSORBED WATER, g.	12.5	16.5	
TOTAL WATER COLLECTED, g.	10.5	16.5	

Sampling Location COATING TANK #5 EXHAUST

Date Received _____ Date Analyzed _____ Reagent Box(es) _____

Run Number	TE-8A	TE-8B	
Run Date	3/24	3/24	
Reagent (H_2O):			
Final Weight, g.	197.0	200.0	
Tared Weight, g.	200.0	200.0	
CONDENSED WATER, g.	-3.0	0.0	
Silica Gel:			
Final Weight, g.	214.0	212.0	
Tared Weight, g.	200.0	200.0	
ABSORBED WATER, g.	14.0	12.0	
TOTAL WATER COLLECTED, g.	11.0	12.0	

LABORATORY ANALYSIS OF MOISTURE CATCH

Plant Name GREENSBORO INDUSTRIAL PLATERS EEI Ref. # 3503

Sampling Location COATING TANK #5 EXHAUST

Date Received _____ Date Analyzed _____ Reagent Box(es) _____

Run Number	TE-9A	TE-9B	
Run Date	3/25	3/25	
Reagent (H_2O):			
Final Weight, g.	198.0	195.0	
Tared Weight, g.	200.0	200.0	
CONDENSED WATER, g.	-2.0	-5.0	
Silica Gel:			
Final Weight, g.	214.0	212.0	
Tared Weight, g.	200.0	200.0	
ABSORBED WATER, g.	14.0	12.0	
TOTAL WATER COLLECTED, g.	12.0	7.0	

Sampling Location COATING TANK #5 EXHAUST

Date Received _____ Date Analyzed _____ Reagent Box(es) _____

Run Number	TE-10A	TE 10B	
Run Date	3/25	3/25	
Reagent (H_2O):			
Final Weight, g.	197.0	186.0	
Tared Weight, g.	200.0	200.0	
CONDENSED WATER, g.	-3.0	-14.0	
Silica Gel:			
Final Weight, g.	211.5	214.0	
Tared Weight, g.	200.0	200.0	
ABSORBED WATER, g.	11.5	14.0	
TOTAL WATER COLLECTED, g.	8.5	0.0	

LABORATORY ANALYSIS OF MOISTURE CATCH

Plant Name GREENSBORO INDUSTRIAL PLATERS **EEI Ref. #** 3503

Sampling Location COATING TANK #5 EXHAUST

Date Received _____ **Date Analyzed** _____ **Reagent Box(es)** _____

Run Number	TE-11A	TE-11B	
Run Date	3/25	3/25	
Reagent (H_2O):			
Final Weight, g.	195.0	188.0	
Tared Weight, g.	200.0	200.0	
CONDENSED WATER, g.	-5.0	-12.0	
Silica Gel:			
Final Weight, g.	213.5	215.0	
Tared Weight, g.	200.0	200.0	
ABSORBED WATER, g.	13.5	15.0	
TOTAL WATER COLLECTED, g.	8.5	3.0	

Sampling Location COATING TANK #5 EXHAUST

Date Received _____ **Date Analyzed** _____ **Reagent Box(es)** _____

Run Number	TE-12A	TE-12B	
Run Date	3/25	3/25	
Reagent (H_2O):			
Final Weight, g.	194.0	197.0	
Tared Weight, g.	200.0	200.0	
CONDENSED WATER, g.	-6.0	-3.0	
Silica Gel:			
Final Weight, g.	215.0	213.5	
Tared Weight, g.	200.0	200.0	
ABSORBED WATER, g.	15.0	13.5	
TOTAL WATER COLLECTED, g.	9.0	10.5	

LABORATORY ANALYSIS OF MOISTURE CATCH

Plant Name GREENSBORO INDUSTRIAL PLATERS EEI Ref. # 3503

Sampling Location COATING TANK #5 EXHAUST

Date Received _____ Date Analyzed _____ Reagent Box(es) _____

Run Number	TE-13A	TE-13B	
Run Date	3/26	3/26	
Reagent (H_2O):			
Final Weight, g.	200.0	200.0	
Tared Weight, g.	200.0	200.0	
CONDENSED WATER, g.	0.0	0.0	
Silica Gel:			
Final Weight, g.	212.5	213.0	
Tared Weight, g.	200.0	200.0	
ABSORBED WATER, g.	12.5	13.0	
TOTAL WATER COLLECTED, g.	12.5	13.0	

Sampling Location COATING TANK #5 EXHAUST

Date Received _____ Date Analyzed _____ Reagent Box(es) _____

Run Number	TE-14A	TE-14B	
Run Date	3/26	3/26	
Reagent (H_2O):			
Final Weight, g.	195.0	195.0	
Tared Weight, g.	200.0	200.0	
CONDENSED WATER, g.	-5.0	-5.0	
Silica Gel:			
Final Weight, g.	217.0	215.0	
Tared Weight, g.	200.0	200.0	
ABSORBED WATER, g.	17.0	15.0	
TOTAL WATER COLLECTED, g.	12.0	10.0	

LABORATORY ANALYSIS OF MOISTURE CATCH

Plant Name GREENSBORO INDUSTRIAL PLATERS EEI Ref. # 3503

Sampling Location MIST ELIMINATOR INLET

Date Received _____ Date Analyzed _____ Reagent Box(es) _____

Run Number	M1-1		
Run Date	3/18		
Reagent (H_2O):			
Final Weight, g.	295.0		
Tared Weight, g.	300.0		
CONDENSED WATER, g.	-5.0		
Silica Gel:			
Final Weight, g.	227.0		
Tared Weight, g.	200.0		
ABSORBED WATER, g.	27.0		
TOTAL WATER COLLECTED, g.	22.0		

Sampling Location MIST ELIMINATOR OUTLET

Date Received _____ Date Analyzed _____ Reagent Box(es) _____

Run Number	MO-1		
Run Date	3/18		
Reagent (H_2O):			
Final Weight, g.	302.0		
Tared Weight, g.	300.0		
CONDENSED WATER, g.	2.0		
Silica Gel:			
Final Weight, g.	231.0		
Tared Weight, g.	200.0		
ABSORBED WATER, g.	31.0		
TOTAL WATER COLLECTED, g.	33.0		

LABORATORY ANALYSIS OF MOISTURE CATCH

Plant Name GREENSBORO INDUSTRIAL PLATERS **EEI Ref. #** 3503

Sampling Location MIST ELIMINATOR INLET

Date Received _____ **Date Analyzed** _____ **Reagent Box(es)** _____

Run Number	M1-2		
Run Date	3/18		
Reagent (H_2O):			
Final Weight, g.	305.0		
Tared Weight, g.	300.0		
CONDENSED WATER, g.	5.0		
Silica Gel:			
Final Weight, g.	225.0		
Tared Weight, g.	200.0		
ABSORBED WATER, g.	25.0		
TOTAL WATER COLLECTED, g.	30.0		

Sampling Location MIST ELIMINATOR OUTLET

Date Received _____ **Date Analyzed** _____ **Reagent Box(es)** _____

Run Number	M0-2		
Run Date	3/18		
Reagent (H_2O):			
Final Weight, g.	300.0		
Tared Weight, g.	300.0		
CONDENSED WATER, g.	0.0		
Silica Gel:			
Final Weight, g.	238.0		
Tared Weight, g.	200.0		
ABSORBED WATER, g.	38.0		
TOTAL WATER COLLECTED, g.	38.0		

LABORATORY ANALYSIS OF MOISTURE CATCH

Plant Name GREENSBORO INDUSTRIAL PLATERS EEI Ref. # 3503

Sampling Location MIST ELIMINATOR INLET

Date Received _____ Date Analyzed _____ Reagent Box(es) _____

Run Number	M1-3		
Run Date	3/19		
Reagent (H_2O):			
Final Weight, g.	320.0		
Tared Weight, g.	300.0		
CONDENSED WATER, g.	20.0		
Silica Gel:			
Final Weight, g.	226.5		
Tared Weight, g.	200.0		
ABSORBED WATER, g.	26.5		
TOTAL WATER COLLECTED, g.	46.5		

Sampling Location MIST ELIMINATOR OUTLET

Date Received _____ Date Analyzed _____ Reagent Box(es) _____

Run Number	M0-3		
Run Date	3/19		
Reagent (H_2O):			
Final Weight, g.	311.0		
Tared Weight, g.	300.0		
CONDENSED WATER, g.	11.0		
Silica Gel:			
Final Weight, g.	233.5		
Tared Weight, g.	200.0		
ABSORBED WATER, g.	33.5		
TOTAL WATER COLLECTED, g.	44.5		

LABORATORY ANALYSIS OF MOISTURE CATCH

Plant Name GREENSBORO INDUSTRIAL PLATERS **EEI Ref. #** 3603

Sampling Location MIST ELIMINATOR INLET

Date Received _____ **Date Analyzed** _____ **Reagent Box(es)** _____

Run Number	M1-4		
Run Date	3/19		
Reagent (H_2O):			
Final Weight, g.	325.0		
Tared Weight, g.	300.0		
CONDENSED WATER, g.	25.0		
Silica Gel:			
Final Weight, g.	226.5		
Tared Weight, g.	200.0		
ABSORBED WATER, g.	26.5		
TOTAL WATER COLLECTED, g.	51.5		

Sampling Location MIST ELIMINATOR OUTLET

Date Received _____ **Date Analyzed** _____ **Reagent Box(es)** _____

Run Number	M0-4		
Run Date	3/19		
Reagent (H_2O):			
Final Weight, g.	318.0		
Tared Weight, g.	300.0		
CONDENSED WATER, g.	18.0		
Silica Gel:			
Final Weight, g.	224.5		
Tared Weight, g.	200.0		
ABSORBED WATER, g.	24.5		
TOTAL WATER COLLECTED, g.	42.5		

LABORATORY ANALYSIS OF MOISTURE CATCH

Plant Name GREENSBORO INDUSTRIAL PLATERS **EEI Ref. #** 3503

Sampling Location COATING TANK #6 MIST ELIMINATOR OUTLET

Date Received _____ **Date Analyzed** _____ **Reagent Box(es)** _____

Run Number	MO-5A	MO-5B	
Run Date	3/26	3/26	
Reagent (H_2O):			
Final Weight, g.	185.0	198.0	
Tared Weight, g.	200.0	200.0	
CONDENSED WATER, g.	-15.0	-2.0	
Silica Gel:			
Final Weight, g.	226.0	232.5	
Tared Weight, g.	200.0	200.0	
ABSORBED WATER, g.	26.0	32.5	
TOTAL WATER COLLECTED, g.	11.0	30.5	

Sampling Location COATING TANK #6 MIST ELIMINATOR OUTLET

Date Received _____ **Date Analyzed** _____ **Reagent Box(es)** _____

Run Number	MO-6A	MO-6B	
Run Date	3/26	3/26	
Reagent (H_2O):			
Final Weight, g.	195.0	200.0	
Tared Weight, g.	200.0	200.0	
CONDENSED WATER, g.	-5.0	0.0	
Silica Gel:			
Final Weight, g.	232.0	236.5	
Tared Weight, g.	200.0	200.0	
ABSORBED WATER, g.	32.0	36.5	
TOTAL WATER COLLECTED, g.	27.0	36.5	

LABORATORY ANALYSIS OF MOISTURE CATCH

Plant Name GREENSBORO INDUSTRIAL PLATERS **EEI Ref. #** 3503

Sampling Location COATING TANK #6 MIST ELIMINATOR OUTLET

Date Received _____ **Date Analyzed** _____ **Reagent Box(es)** _____

Run Number	MO-7A	MO-7B	
Run Date	3/26	3/26	
Reagent (H_2O):			
Final Weight, g.	195.0	207.0	
Tared Weight, g.	200.0	200.0	
CONDENSED WATER, g.	-5.0	7.0	
Silica Gel:			
Final Weight, g.	227.5	234.0	
Tared Weight, g.	200.0	200.0	
ABSORBED WATER, g.	27.5	34.0	
TOTAL WATER COLLECTED, g.	22.5	41.0	

Sampling Location _____

Date Received _____ **Date Analyzed** _____ **Reagent Box(es)** _____

Run Number			
Run Date			
Reagent ( ):			
Final Weight, g.			
Tared Weight, g.			
CONDENSED WATER, g.			
Silica Gel:			
Final Weight, g.			
Tared Weight, g.			
ABSORBED WATER, g.			
TOTAL WATER COLLECTED, g.			

ENTROPY
ENVIRONMENTALISTS INC

POST OFFICE BOX 12291
RESEARCH TRIANGLE PARK
NORTH CAROLINA 27709-2291
919-781-3550

REQUEST FOR ANALYSIS

PURCHASE ORDER # 3503 JOB NAME: Chrome plating

LABORATORY: RTI ATT PETER

DATE SAMPLES WERE TRANSMITTED: 4/1/86 EXPECTED DATE OF RESULTS:

SAMPLE MATRIX:

TYPE OF ANALYSIS REQUESTED: Cr^{+6} by EPA method
Total Cr by ICP

IMPINGER 1 CONTAINS THE RINSE

SAMPLE #	RUN #	RUN I.D.	BASIS
G 1	TE · 1A	IMPINGER 1 NaOH	Cr^{+6} & ICP for Cr
G 2	TE · 1A	" 2 NaOH	"
G 3	TE · 1A	" 3 NaOH	"
G 4-R	TE · 1A	TEFLON FILTER RESIDUE	ICP for Cr
G 4-F	TE · 1A	TEFLON FILTRATE	Cr^{+6}
G 5	TE · 2A	IMPINGER 1 NaOH	Cr^{+6} + ICP for Cr
G 6	TE · 2A	" 2 NaOH	"
G 7	TE · 2A	" 3 NaOH	"
G 8-R	TE · 2A	TEFLON FILTER RESIDUE	ICP for Cr
G 8-F	TE · 2A	TEFLON FILTRATE	Cr^{+6}
G 9	TE · 3A	IMPINGER 1 NaOH	Cr^{+6} + ICP FOR Cr
G 10	TE · 3A	" 2 NaOH	"
G 11	TE · 3A	" 3 NaOH	"

REQUEST FOR ANALYSIS

PURCHASE
ORDER # 3503

IMPINGER 1 CONTAINS THE RINSE

SAMPLE #	RUN #	RUN ID	BASIS
G 12-R	TE · 3A	TEFLON FILTER RESIDUE	ICP for Cr
G 12-F	TE · 3A	TEFLON FILTRATE	Cr^{+6}
G 13	TE · 4A	IMPINGER 1 (NaOH)	Cr^{+6} & ICP FOR Cr
G 14	TE · 4A	" 2 (NaOH)	"
G 15	TE · 4A	" 3 (NaOH)	"
G 16-R	TE · 4A	TEFLON FILTER RESIDUE	ICP for Cr
G 16-F	TE · 4A	TEFLON FILTRATE	Cr^{+6}
G 17	TE · 5A	IMPINGER 1 (NaOH)	Cr^{+6} & ICP for Cr
G 18	TE · 5A	" 2 (NaOH)	" "
G 19	TE · 5A	" 3 (NaOH)	"
G 20-R	TE · 5A	TEFLON FILTER RESIDUE	ICP FOR Cr
G 20 F	TE · 5A	TEFLON FILTRATE	Cr^{+6}
G 21	TE · 6A	IMPINGER 1 (NaOH)	Cr^{+6} & ICP for Cr
G 22	TE · 6A	" 2 (NaOH)	"
G 23	TE · 6A	" 3 (NaOH)	"
G 24-R	TE · 6A	TEFLON FILTER RESIDUE	ICP FOR Cr
G 24-F	TE · 6A	TEFLON FILTRATE	Cr^{+6}
✓G 25	TE · 7A	IMPINGER REAGENT NaOH	Cr^{+6} & ICP for Cr
✓G 26-R	TE · 7A	TEFLON FILTER RESIDUE	ICP for Cr
G 26 · F	TE · 7A	TEFLON FILTRATE	Cr^{+6}
✓G 27	TE · 8A	IMPINGER REAGENT NaOH	Cr^{+6} & ICP for Cr
✓G 28-R	TE · 8A	TEFLON FILTER RESIDUE	ICP FOR Cr
G 28 · F	TE · 8A	TEFLON FILTRATE	Cr^{+6}
✓G 29	TE · 9A	IMPINGER REAGENT NaOH	Cr^{+6} & ICP for Cr
✓G 30-R	TE · 9A	TEFLON FILTER RESIDUE	ICP FOR Cr
G 30 · F	TE · 9A	TEFLON FILTRATE	Cr^{+6}
✓G 31	TE · 10A	IMPINGER REAGENT NaOH	Cr^{+6} & ICP for Cr
✓G 32-R	TE · 10A	TEFLON FILTER RESIDUE	ICP for Cr
G 32 · F	TE · 10A	TEFLON FILTRATE	Cr^{+6}

✓ = SENT FROM HERE

ENTDODY

REQUEST FOR ANALYSIS

PURCHASE ORDER # 3503

SAMPLE#	RUN #	RUN ID	BASIS
✓G 33	TE · 11A	IMPINGER REAGENT NaOH	Cr^{+6} & ICP for Cr
✓G 34-R	TE · 11A	TEFLON FILTER RESIDUE	ICP FOR Cr
G 34 · F	TE · 11A	TEFLON FILTRATE	Cr^{+6}
✓G 35	TE · 12A	IMPINGER REAGENT NaOH	Cr^{+6} & ICP FOR Cr
✓G 36-R	TE · 12A	TEFLON FILTER RESIDUE	ICP FOR Cr
G 36 · F	TE · 12A	TEFLON FILTRATE	Cr^{+6}
✓G 37	TE · 13A	IMPINGER REAGENT NaOH	Cr^{+6} & ICP FOR Cr
✓G 38-R	TE · 13A	TEFLON FILTER RESIDUE	ICP FOR Cr
G 38 · F	TE · 13A	TEFLON FILTRATE	Cr^{+6} "
✓G 39	TE · 14A	IMPINGER REAGENT NaOH	Cr^{+6} & ICP FOR Cr
✓G 40-R	TE · 14A	TEFLON FILTER RESIDUE	ICP FOR Cr
G 40 · F	TE · 14A	TEFLON FILTRATE	Cr^{+6}
G 41	TE · 1B	IMPINGER 1ST SPLIT DI	Cr^{+6} & ICP FOR Cr
G 42	TE · 1B	IMPINGER 2ND SPLIT NaOH	"
G 43-R	TE · 1B	TEFLON FILTER RESIDUE	ICP FOR Cr
G 43 · F	TE · 1B	TEFLON FILTRATE	Cr^{+6}
G 44	TE · 2B	IMPINGER 1ST SPLIT DI	Cr^{+6} & ICP FOR Cr
G 45	TE · 2B	IMPINGER 2ND SPLIT NaOH	"
G 46-R	TE · 2B	TEFLON FILTER RESIDUE	ICP FOR Cr
G 46 · F	TE · 2B	TEFLON FILTRATE	Cr^{+6}
G 47	TE · 3B	IMPINGER 1ST SPLIT DI	Cr^{+6} & ICP FOR Cr
G 48	TE · 3B	IMPINGER 2ND SPLIT NaOH	"
G 49-R	TE · 3B	TEFLON FILTER RESIDUE	ICP FOR Cr
G 49 · F	TE · 3B	TEFLON FILTRATE	Cr^{+6}
G 50	TE · 4B	IMPINGER 1ST SPLIT DI	Cr^{+6} & ICP FOR Cr
G 51	TE · 4B	IMPINGER 2ND SPLIT NaOH	"
G 52-R	TE · 4B	TEFLON FILTER RESIDUE	ICP FOR Cr
G 52 · F	TE · 4B	TEFLON FILTRATE	Cr^{+6}

TE 1B THRU TE 6B : THE IMPINGER REAGENT WAS DISTILLED H_2O. THE SAMPLES WERE CLEANED UP, MEASURED, RINSE ADD TO JAR & VOLUMED. THE SAMPLE WAS THE SPLIT AND 0.6 gm OF NaOH WAS

✓ = SENT FROM HERE

ENTRODY

REQUEST FOR ANALYSIS

PURCHASE ORDER # 3503

SAMPLE #	RUN #	RUN ID	BASIS
G 53	TE · 5B	IMPINGER 1ST SPLIT DI	Cr^{+6} + ICP for Cr
G 54	TE · 5B	IMPINGER 2nd SPLIT NaOH	"
G 55-R	TE · 5B	TEFLON FILTER RESIDUE	ICP FOR Cr
G 55 · F	TE · 5B	TEFLON FILTRATE	Cr^{+6}
G 56	TE · 6B	IMPINGER 1ST SPLIT DI	Cr^{+6} & ICP FOR Cr
G 57	TE · 6B	IMPINGER 2nd SPLIT NaOH	"
G 58-R	TE · 6B	TEFLON FILTER RESIDUE	ICP FOR Cr
G 58 · F	TE · 6B	TEFLON FILTRATE	Cr^{+6}
✓G 59	TE · 7B	IMPINGER REAGENT NaOH	Cr^{+6} & ICP FOR Cr
✓G 60	TE · 7B	FRONT 1/2 RINSE NaOH	"
✓G 61	TE · 7B	FRIT RINSE NaOH	"
✓G 62-R	TE · 7B	GLASS FILTER RESIDUE	ICP FOR Cr
G 62 · F	TE · 7B	GLASS FILTRATE	Cr^{+6}
✓G 63	TE · 8B	IMPINGER NaOH	Cr^{+6} & ICP FOR Cr
✓G 64	TE · 8B	FRONT 1/2 RINSE NaOH	"
✓G 65	TE · 8B	FRIT RINSE NaOH	"
✓G 66-R	TE · 8B	GLASS FILTER RESIDUE	ICP FOR Cr
G 66 · F	TE · 8B	GLASS FILTRATE	Cr^{+6}
✓G 67	TE · 9B	IMPINGER NaOH	Cr^{+6} & ICP FOR Cr
✓G 68	TE · 9B	FRONT 1/2 RINSE NaOH	"
✓G 69	TE · 9B	FRIT RINSE NaOH	"
✓G 70-R	TE · 9B	GLASS FILTER RESIDUE	ICP FOR Cr
G 70 · F	TE · 9B	GLASS FILTRATE	Cr^{+6}
✓G 71	TE · 10B	IMPINGER NaOH	Cr^{+6} & ICP FOR Cr
✓G 72	TE · 10B	FRONT 1/2 RINSE NaOH	"
✓G 73	TE · 10B	FRIT RINSE NaOH	"
✓G 74-R	TE · 10B	GLASS FILTER RESIDUE	ICP FOR Cr
G 74 · F	TE · 10B	GLASS FILTRATE	Cr^{+6}

✓ = SENT FROM HERE

ENTROPY

REQUEST FOR ANALYSIS

PURCHASE ORDER # 3503

SAMPLE #	RUN #	RUN ID	BASIS
✓G 75	TE·11B	IMPINGER NaOH	Cr^{+6} + ICP for Cr
✓G 76	TE·11B	FRONT ½ RINSE NaOH	"
✓G 77	TE·11B	FRIT RINSE NaOH	"
✓G 78-R	TE·11B	GLASS FILTER RESIDUE	ICP for Cr
G 78·F	TE·11B	GLASS FILTRATE	Cr^{+6}
✓G 79	TE·12B	IMPINGER NaOH	Cr^{+6} & ICP for Cr
✓G 80	TE·12B	FRONT ½ RINSE NaOH	"
✓G 81	TE·12B	FRIT RINSE NaOH	"
✓G 82-R	TE·12B	GLASS FILTER RESIDUE	ICP for Cr
G 82·F	TE·12B	GLASS FILTRATE	Cr^{+6}
✓G 83	TE·13B	IMPINGER NaOH	Cr^{+6} & ICP for Cr
✓G 84	TE·13B	FRONT ½ RINSE NaOH	"
✓G 85	TE·13B	FRIT RINSE NaOH	"
✓G 86-R	TE·13B	GLASS FILTER RESIDUE	ICP for Cr
G 86·F	TE·13B	GLASS FILTRATE	Cr^{+6}
✓G 87	TE·14B	IMPINGER NaOH	Cr^{+6} & ICP for Cr
✓G 88	TE·14B	FRONT ½ RINSE NaOH	"
✓G 89	TE·14B	FRIT RINSE NaOH	"
✓G 90-R	TE·14B	GLASS FILTER RESIDUE	ICP for Cr
G 90·F	TE·14B	GLASS FILTRATE	Cr^{+6}
G 91	MO·1	IMPINGER REAGENT NaOH	(X) 1 ml aliquot + Cr^{+6}
G 92-	MO·1	TEFLON FILTER	(X) Cr^{+6} - Residue in vial
G			
G 93	MO·2	IMPINGER NaOH	(X) 1 ml aliquot + Cr^{+6}
G 94	MO·2	TEFLON FILTER	(X) Cr^{+6} - Residue in vial
G 95	MO·3	IMPINGER NaOH	(X) 1 ml aliquot + Cr^{+6}.
G 96	MO·3	TEFLON FILTER	(X) Cr^{+6} - Residue in vial

✓ = SENT FROM HERE

ENTRORY

REQUEST FOR ANALYSIS

PURCHASE ORDER # 3503

SAMPLE #	RUN #	RUN ID	BASIS
G 97	MO.4	IMPINGER NaOH	~~Cr~~ Incl only not $HCrT6$ ①
G 98	MO.4	TEFLON FILTER	⊗ $CrT6$ – Residue in vial ②
✓G 99	MO.5A	IMPINGER NaOH	⊗ ①
✓G 100	MO.5A	TEFLON FILTER	⊗ ②
✓G 101	MO.5B	IMPINGER NaOH	Cr^{+6} + ICP for Cr
✓G 102	MO.5B	FRONT ½ RINSE NaOH	"
✓G 103	MO.5B	FRIT RINSE NaOH	"
✓G 104-R	MO.5B	GLASS FILTER RESIDUE	ICP FOR Cr
G 104.F	MO.5B	GLASS FILTRATE	Cr^{+6}
✓G 105	MO.6A	IMPINGER NaOH	Cr^{+6} & ICP FOR Cr
✓G 106-R	MO.6A	TEFLON FILTER RESIDUE	ICP FOR Cr
G 106.F	MO.6A	TEFLON FILTRATE	Cr^{+6}
✓G 107	MO.6B	IMPINGER NaOH	Cr^{+6} & ICP FOR Cr
✓G 108	MO.6B	FRONT ½ RINSE NaOH	"
✓G 109	MO.6B	FRIT RINSE NaOH	"
✓G 110-R	MO.6B	GLASS FILTER RESIDUE	ICP FOR Cr
G 110.F	MO.6B	GLASS FILTRATE	Cr^{+6}
✓G 111	MO.7A	IMPINGER NaOH	Cr^{+6} & ICP FOR Cr
✓G 112-R	MO.7A	TEFLON FILTER RESIDUE	ICP FOR Cr
G 112.F	MO.7A	TEFLON FILTRATE	Cr^{+6}
✓G 113	MO.7B	IMPINGER NaOH	Cr^{+6} & ICP FOR Cr
✓G 114	MO.7B	FRONT ½ RINSE NaOH	"
✓G 115	MO.7B	FRIT RINSE NaOH	"
✓G 116-R	MO.7B	GLASS FILTER RESIDUE	ICP FOR Cr
G 116.F	MO.7B	GLASS FILTRATE	Cr^{+6}

✓ = SENT FROM HERE

ENTRODY

REQUEST FOR ANALYSIS

PURCHASE ORDER # 3503

SAMPLE#	RUN #	RUN ID	BASIS
G 117	MI · 1	IMPINGER NaOH	(*) 1ml aliquot for CrT6 (1)
G 118	MI · 1	TEFLON FILTER	(*) CrT6 – Residue in vial (2)
G 119	MI · 2	IMPINGER NaOH	(*) (1)
G 120	MI · 2	TEFLON FILTER	(*) (2)
G 121	MI · 3	IMPINGER NaOH	(*) (1)
G 122	MI · 3	TEFLON FILTER	(*) (2)
G 123	MI · 4	IMPINGER NaOH	(*) (1)
G 124	MI · 4	TEFLON FILTER	(*) (2)
LG 125	BLANK TEFLON FILTER		(*) CrT6 of residue vial
+ LG 126	BLANK GLASS FILTER		CrT6 + ICP for total Cr
LG 127	BLANK DISTILLED H_2O		CrT6 + ICP for Cr
LG 128	BLANK 0.1 N NaOH		(*) CrT6 + 1 ml in vial
LG 129	H6		(*) 1.0 g/m – pipette 0.5 ml in vial
18/86 G 130		RINSE TANK SAMPLE	CrT6 + ICP for Cr
19/86 G 131		RINSE TANK SAMPLE	"
G 132	6A1	TANK, ANODE	"
G 133	6A2	TANK, ANODE	"
G 134	6A3	TANK, ANODE	"
G 135	6A4	TANK, ANODE	"
G 136	6B1	TANK, BATH	"
G 137	6B2	TANK, BATH	"
G 138	6B3	TANK, BATH	"

REPORT AS µg/ml OF SAMPLE PROVIDED.

√ = SENT FROM HERE

ENTROPY

REQUEST FOR ANALYSIS

PURCHASE ORDER # 3503

SAMPLE#	RUN #	RUN ID	BASIS
G 139	6B4	TANK, BATH	Cr+6 + ICP for Cr
G 140	6C1	TANK, CATHODE	"
G 141	6C2	TANK, CATHODE	"
G 142	6C3	TANK, CATHODE	"
G 143	6C4	TANK, CATHODE	"
G 144	3.18	MIST ELIMINATOR WASH DOWN	"
G 145	3.18	"	"
G 146	3.18	"	"
G 147	3.18	"	"
G 148	3.18	"	"
G 149	3.19	"	"
G 150	3.19	"	"
G 151	3.19	"	"
✓G 152	3.25	BEGINNING " 14:03	"
✓G 153	3.25	MIDDLE " 14:05	"
✓G 154	3.25	END " 14:07	"
✓G 155	3.13.86	SCRUBBER SOLUTION @ 16:00 CAROLINA PLATERS GREENVILLE	"

✓ = SENT FROM HERE

ENTROPY

REQUEST FOR ANALYSIS

PURCHASE
ORDER # 3503

SAMPLE #	RUN #	RUN ID	BASIS
✓G 156	MO.S1	PART SIZE PRECUTTER RINSE	Cr+6 + ICP for Cr on residue
✓G 157 < R/F	MO.S1	" " 1ST STAGE	RESIDUE FOR ICP FOR Cr FILTRATE FOR Cr+6
✓G 158 < R/F	MO.S1	" " 2nd "	"
✓G 159 < R/F	MO.S1	" " 3rd "	"
✓G 160 < R/F	MO.S1	" " 4th "	"
✓G 161 < R/F	MO.S1	" " 5th "	"
✓G 162 < R/F	MO.S1	" " 6th "	"
✓G 163 < R/F	MO.S1	" " 7th "	"
✓G 164 < R/F	MO.S1	" " 8th "	"
✓G 165 < R/F	MO.S1	" " SF "	"
✓G 166	MO.S2	PART. SIZE PRECUTTER RINSE	Cr+6 & ICP FOR Cr
✓G 167 < R/F	MO.S2	" " 1ST STAGE	RESIDUE FOR ICP FOR Cr FILTRATE FOR Cr+6
✓G 168 < R/F	MO.S2	" " 2nd "	"
✓G 169 < R/F	MO.S2	" " 3rd "	"
✓G 170 < R/F	MO.S2	" " 4th "	"
✓G 171 < R/F	MO.S2	" " 5th "	"
✓G 172 < R/F	MO.S2	" " 6th "	"
✓G 173 < R/F	MO.S2	" " 7th "	"
✓G 174 < R/F	MO.S2	" " 8th "	"
✓G 175 < R/F	MO.S2	" " SF "	"
✓G 176	MO.S3	PART SIZE PRECUTTER RINSE	Cr+6 & ICP FOR Cr
✓G 177 < R/F	MO.S3	" " 1ST STAGE	RESIDUE FOR ICP FOR Cr FILTRATE FOR Cr+6
✓G 178 < R/F	MO.S3	" " 2nd "	"
✓G 179 < R/F	MO.S3	" " 3rd "	"
✓G 180 < R/F	MO.S3	" " 4th "	"
✓G 181 < R/F	MO.S3	" " 5th "	"
✓G 182 < R/F	MO.S3	" " 6th "	"

✓ = SENT FROM HERE

REQUEST FOR ANALYSIS

PURCHASE
ORDER # 3503

SAMPLE #	RUN #	RUN ID	BASIS
✓ 183 R/F	MO. S3	PART SIZE 7th STAGE	FILTER RESIDUE FOR ICP & Cr / FILTRATE FOR Cr +6
✓ 184 R/F	MO. S3	" " 8th "	
✓ 185 R/F	MO. S3	" " SF "	"
✓ 186 R/F	MI · S1	PART SIZE PRECUTTER RINSE	Cr +6 & ICP FOR Cr
✓ 187 R/F	MI · S1	" " 1st STAGE	FILTER RESIDUE FOR ICP & Cr / FILTRATE FOR Cr+6
✓ 188 R/F	MI · S1	" " 2nd "	"
✓ 189 R/F	MI · S1	" " 3rd "	"
✓ 190 R/F	MI · S1	" " 4th "	"
✓ 191 R/F	MI · S1	" " 5th "	"
✓ 192 R/F	MI · S1	" " 6th "	"
✓ 193 R/F	MI · S1	" " 7th "	"
✓ 194 R/F	MI · S1	" " 8th "	"
✓ 195 R/F	MI · S1	" " SF "	"
		" "	
✓ 196 R/F	MI · S2	PART SIZE PRECUTTER RINSE	Cr +6 & ICP FOR Cr
✓ 197 R/F	MI · S2	" " 1st STAGE	FILTER RESIDUE FOR ICP & Cr / FILTRATE FOR Cr+6
✓ 198 R/F	MI · S2	" " 2nd "	"
✓ 199 R/F	MI · S2	" " 3rd "	"
✓ 200 R/F	MI · S2	" " 4th "	"
✓ 201 R/F	MI · S2	" " 5th "	"
✓ 202 R/F	MI · S2	" " 6th "	"
✓ 203 R/F	MI · S2	" " 7th "	"
✓ 204 R/F	MI · S2	" " 8th "	"
✓ 205 R/F	MI · S2	" " SF "	"
✓ 206 R/F	MI · S3	PART SIZE PRECUTTER RINSE	Cr +6 & ICP FOR Cr
✓ 207 R/F	MI · S3	" " 1st STAGE	FILTER RESIDE FOR ICP & Cr / FILTRATE FOR Cr+6
✓ 208 R/F	MI · S3	" " 2nd "	"

✓ = SENT FROM HERE

ENTROPY

REQUEST FOR ANALYSIS

PURCHASE
ORDER # 3503

SAMPLE #	RUN #	RUN ID	BASIS
VG 209	MI · S3	PART SIZE 3rd STAGE	Cr+6 & ICP FOR Cr
VG 210 <F	MI · S3	" " 4th "	RESIDUE FOR ICP FOR Cr FILTRATE FOR Cr+6
VG 211 <F	MI · S3	" " 5th "	"
VG 212 <F	MI · S3	" " 6th "	"
VG 213 <F	MI · S3	" " 7th "	"
VG 214 <F	MI · S3	" " 8th "	"
VG 215 <F	MI · S3	" " SF "	"
VG 216 <F	BLANK PARTICLE SIZING FILTERS		" "

√ = SENT FROM HERE

ENTROPY

Cr^{+6} AND Cr (ICP) DATA, GREENSBORO INDUSTRIAL PLATERS

N.D (Total Cr, Cr^{+6}) = 0.01 μg/mL

N/A — NOT APPLICABLE

		Total ICP vol, mL	raw Cr ppm	total μg total Cr	raw Cr^{+6} ppm	total μg Cr^{+6}	
Run	G-1	340	7.89	2680	8.13	2764	
TE-1A	2	210	ND	< 2	<0.02	< 4.2	
	3	70	ND	< 0.7	0.05	< 3.5	
	4	50	0.07	3.5	0.02	2.0	
	5	385	6.28	2420	6.44	2480	
TE-2A	6	130	ND	< 1.3	0.08	10.4	
	7	195	ND	< 2.0	<0.02	< 4.0	
50	8	50	0.04	2.0	<0.02	< 2.0	
	9	285	9.47	2700	9.66	2750	
	10	190	0.072 ~~ND~~	13.6 ~~< 2.0~~	0.07	13.3	⊕
TE-3A	11	230	ND	< 2.3	<0.02	4.6	
50	12	100	ND	< 1.	<0.02	< 2	
	13	405	6.76	2740	6.89	2790	
TE-4A	14	225	0.056	12.6	0.09	20.3	
	15	120	0.055	6.60	0.07	8.4	
50	16	100	ND	< 1	<0.02	< 2	
	17	325	6.19	2000	6.31	2050	
TE-5A	18	160	0.55	88.0	0.60	96.0	
	19	130	0.24	31.2	0.27	35.1	
50	20	100	0.08	8.0	0.09 ~~< 2~~	9.0	
	21	325	8.31	2700	8.26	2680	
TE-6A	22	220	09	19.8	0.10	22.0	
	23	170	.137	23.3	0.14	23.8	
50	24	100	ND	< 1.	<0.02	< 2	
7A	25	665	7.90	5250	8.34	5550	
50	26	50	ND	< 1	<0.02	< 2	
8A	27	540	5.83 ~~ND~~	3150 ~~< 4~~	6.03	3250	⊛
50	28	100	ND	< 1.	<0.02	< 2	
9A	29	530	5.37	2850	5.56	2950	
50	30	100	ND	< 1	<0.02	< 2	
10A	31	565	4.96	2800	5.20	2940	
50	32	100	ND	< 1.	<0.02	< 2	
11A	33	552	9.43	5210	9.63	5320	
50	34	100	ND	< 1	<0.02	< 2	
12A	35	457	10.94	5000	11.32	5170	
50	36	100	ND	< 1.	<0.02	< 2	
13A	37	701	8.89	6230	8.94	6270	
50	38	100	ND	< 1	<0.02	< 2	

		ICP Vol.	raw Cr ppm	SCP µg Cr Total	raw Cr+6 ppm	µg Cr+6
1A	G-39	470	10.02	4,710	10.41	4890
50	40	50	ND	<1	<0.02	<1
10	41	780	3.30	2574	3.17	2473
10	42	780	3.31	2582	3.39	2644
50	43	100	0.10	10	<0.02	<2
10	44	930	2.22	2065	2.17	2018
10	45	930	2.22	2065	2.25	2093
50	46	50	0.08	4.0	<0.02	<1
10	47	820	2.69	2340	2.57	2236
10	48	870	2.51	2184	2.55	2218
50	49	50	0.144	7.2	<0.02	<1
10	50	750	2.90	2175	2.79	2093
10	51	750	2.92	2190	2.90	2175
50	52	50	ND	<1	<0.02	<1
10	53	790	3.82	3018	3.68	2907
10	54	790	4.22	3334	4.23	3342
50	55	50	ND	<1	<0.02	<1
10	56	645	4.17	2690	4.19	2703
10	57	645	3.79	2445	3.79	2445
50	58	50	ND	<1	<0.02	<1
	59	305	ND	<4	<0.02	<6
TE 7B	60	166	24.45	4060	25.35	4210
	61	140	ND	<1.4	<0.02	2.80
5	62	50	2.46	123	9.81	981
	63	380	0.131	49.8	0.16	60.8
TE 8B	64	131	19.93	2610	20.17	2650
	65	110	ND	<1.1	<0.02	<2
5	66	100	2.41	241	5.51	551
	67	410	0.017	6.97	<0.02	<8
TE 9B	68	217	11.68	2,530	12.42	2700
	69	165	ND	<1.7	<0.02	<4
5	70	50	0.91	46	4.42	442
	71	330	0.038	12.5	0.06	20
TE 10B	72	131	27.5	3,600	27.30	3580
	73	140	ND	<1.4	<0.02	<3
25	74	50	0.50	25	2.49	249
	75	365	0.013	4.75	<0.02	<8
1	76	sample not located	32.3	*	32.61	*

		ICP Vol.	raw ppm Cr total	µg Total Cr	raw ppm Cr+6	µg Cr+6
TE 11B	G-77	135	0.012	1.62	<0.02	<2.7
5	78	50	1.47	74	5.82	582
	79	367	9.38	3,440	9.69	3560
TE12	80	115	9.00	1,040	9.30	1070
	81	95	0.087	8.27	0.05	4.8
5	82	50	1.29	64	5.10	510
	83	385	0.048	18.5	0.06	23.1
TE13	84	126	30.1	3,790	31.44	3960
	85	200	ND	<2.0	<0.02	<4
5	86	50	1.50	75	10.39	520
	⊛ 87	395	ND	<4.0	0.03	11.9
TE 14	88	176	18.24	3,210	19.65	3470
	89	205	ND	<2.1	<0.02	4.1
5	90	50	0.96	48	7.90	395
MO1	91	605	1.03	623	1.11	672
	92	60			0.05	3.0
MO2	93	585	1.86	1,090	1.99	1160
	94	90			0.02	1.8
MO3	95	685	0.914	626	1.00	685
	96	80			0.10	8.0
MO4	97	835	1.71	1,430	1.84	1536
25	98	50			0.04	2.0
	99	385	2.24	862	2.33	897
MO5A	100	40	ND	<0.4	<0.02	<1
	101	335	ND	<3.4	<0.02	6.7
MO5B	102	130	5.44	707	5.82	757
	103	150	ND	<1.5	<0.02	<3
50	104	50	0.19	9.5	0.26	26
MO6A	105	535	2.58	1,380	2.72	1460
50	106	50	0.258	12.9	<0.02	<2.0
	107	335	0.017	5.70	0.02	6.7
MO6B	108	52	14.1	733	13.78	720
50	109	50	.034	1.7	0.06	3.0
50	110	50	ND	<1	0.09	9.0
MO7A	111	575	1.74	1,000	1.83	1050
50	112	50	ND	<1	<0.02	<2
MO7B	113	495	0.046	22.8	0.06	30
	114	120	6.28	754	6.39	767

		ICP Vol	ppm Cr total	µg Cr	ppm Cr+6	µg Cr+6
	G-115	135	ND	<1.4	<0.02	<2.7
	116	100	ND	<1	<0.02	<2
	117	600	7.24	4,340	7.48	4490
	118	60	ND	<0.6	0.07	4.2
	119	551	12.8	7,050	13.17	7300
	120	85	0.025	2.13	0.05	4.3
	121	605	7.22	4,370	7.38	4460
	122	45	0.108	4.86	0.16	7.2
	123	722	10.07	7,270	10.47	7560
	124	65	ND	<0.7	<0.02	<2
0	125	50	.008	<1	<0.02	<1
	126	100	ND	<1	<0.02	<2
50	127	N/A	ND	N/A	<0.02	N/A
50	128				<0.02	N/A
	129	N/A			96.5	96.5
5	130	1000X	1.04	0.1%	1.13	0.1%
5	131	1000X	1.12	0.1%	1.21	0.1%
5	132	10,000X	15.32	15.3%	13.73	13.7%
5	133		14.7	14.7%	13.39	13.4
5	134		14.1	14.1%	12.87	12.9
5	135		14.4	14.4%	13.03	13.0
5	136		14.9	14.9%	13.55	13.6
5	137		13.8	13.8%	13.50	13.5
5	138		13.9	13.9%	12.82	12.8
5	139		13.9	13.9%	13.13	13.1
5	140		14.2	14.2%	13.24	13.2
5	141		14.2	14.2%	13.34	13.3
5	142		13.4	13.4%	12.72	12.7
5	143		13.4	13.4%	12.82	12.8
5	144		9.84	9.8%	8.70	8.7
5	145		7.39	7.4%	6.60	6.6
5	146	10,000	9.24	9.2%	8.10	8.1
5	147	12,500	1.55	1.9%	1.57	2.0
5	148	"	0.87	1.0%	1.03	1.3
5	149	10,000X	6.60	6.6%	6.16	6.2
5	150	12,500	1.83	2.3%	1.93	2.4
5	151	12500	0.81	1.0%	1.03	2.0

* Cr^{+3} results G156-G216

ICP

		ICP Vol	ppm Cr	µg Cr	ppm Cr^{+6}	µg Cr^{+6}
5	G-152	10,000x	6.21	6.2%	6.00	6.0%
5	153	12,500x	0.87	1.1%	1.08	1.4%
5	154	12500x	0.60	0.8%	0.84	1.1%
5	155	10,000	6.45	6.5%	6.42	6.4%
10	MO-S 156	(*) 22 *	~~9.00~~	(198) ~~176~~	7.67	~~76~~ 169 ✓
5	157	50/10	0.22	(11.0)	0.05	(0.5)
8	158		.19	9.5	0.08	0.8
1	159		.37	18.5	0.75	7.5
1	160		.29	14.5	0.85	8.5
1	161		.23	11.5	0.47	4.7
5	162		.15	7.5	0.19	1.9
5	163		0.18	9.0	0.04	0.4
5	164		0.21	10.5	0.03	0.3
5	165		ND	<1	<0.02	<0.2
25	MO-S 166	(*) 103	3.86 ~~0.177~~	(397)	3.44	354 ✓
5	167	50/10	0.28	14.0	0.09	0.9
6	168		0.23	11.7	0.66	6.6
5	169		0.37	18.5	2.00	20.0
5	170		0.54	27.0	1.45	14.5
5	171		0.45	22.5	0.79	7.9
5	172		0.14	7.0	0.72	7.2
5	173		0.24	12.0	0.33	3.3
5	174		0.19	9.5	0.23	2.3
5	175		ND	<1	0.02	0.2
75	MO-S 176	(*)	1.82 ~~0.408~~	(141)	1.64 ~~1.57~~	127 ✓
5	177	50/10	0.083	4.2	0.13	1.3
6	178		0.22	11.0	0.60	6.0
5	179		0.37	18.5	2.04	20.4
5	180		0.30	15.0	1.57	15.7
5	181		0.33	16.5	0.89	8.9
5	182		0.22	11.0	0.47	4.7
5	183		0.16	8.0	0.15	1.5
5	184		0.16	8.0	0.05	0.5
5	MI-S 185		ND	<1	<0.02	<0.2
1	186	(*) 74	1.26 ~~1.40~~	(9320)	118.80	881.0 ✓
6	187		1.57	78.5	8.55	85.5
6	188		.59	29.5	~~1.72~~ 1.90	19.0

ICP

		ICP Vol	ppm Cr	µg Cr(+3)	ppm Cr+6	µg Cr+6	
1	G-189	~~4~~ 10/10	3.41	~~[illegible]~~ 171	14.89	~~N/A~~ 149	
2	190		2.54	127	10.29	103	
1	191		0.83	41.5	3.47	34.7	
5	192		0.24	12.0	0.95	9.5	
5	193		0.17	8.5	0.14	1.4	
5	194		0.15	7.5	0.04	0.4	
5	195		ND	<1	<0.02	<0.2	
1 MI-52	196	84	33.1	2780	31.57	2650	✓
6	197	50/10	0.48	24.0	~~[illegible]~~ 1.91	19.1	
6	198		1.41	70.5	5.93	59.3	
6	199		3.81	191	18.07	181	
6	200		2.68	134	13.60	136	
6	201		0.83	42	4.34	43.4	
5	202		0.36	18.	1.24	12.4	
5	203		0.25	12.5	0.56	5.6	
5	204		0.20	10.0	0.36	3.6	
6	205		0.04	2.0	0.04	0.4	
1 MI-53	206	74	~~[illegible]~~ 28.5	2040	27.56	2010	✓
1	207	50/10	0.44	22	1.48	14.8	
5	208		0.94	47	4.73	47.3	
1	209		2.89	145	13.37	134	
1	210		2.92	146	8.22	82.2	
6	211		1.22	61	3.33	33.3	
5	212		0.40	20	0.82	8.2	
5	213		.29	14.5	0.13	1.3	
5	214		.22	11.0	0.02	0.2	
5	215		ND	<1	<0.02	<0.2	
50	216		.92	46	<0.02	<6.2	
	217						
	218						
	219						
	220						
	221						
	222						
	223						
	224						

WET CHEMICAL ANALYSIS SHEETS

DATE RECEIVED: 3/18/86 DATE ANALYZED 3/19/86

ANALYST: Grohse CLIENT: ENTROPY

ANALYTE: Cr +6

RTI #	CLIENT #	SAMPLE CONCENTRATION Total µg	µg/g	µg/mL		
G-4/TE-1B	"			3.29	780	2566
G-4/TE-2B				2.17	930	2018
G-4/TE-3B				2.53	870	2201

ATOMIC SPECTROSCOPY
SAMPLE ANALYSIS (Cr)

RTI No.	Client	Absorbance/Intensity			Mean	Test Solution Conc.	Test Solution Volume	Dilution Factor	Total Cr µg Analyte Quantity	Sample Volume/Mass	Total Cr Final Sample µg/ml Concentration
G1	Entropy					2.25	100		225		
G41						1.65	100		165		
G5						1.94	100		194		
G44						1.55	100		155		
G91						2.14	"		214		
G93						1.83	"		183		
G95						0.65	"		65		
G97						1.38	"		138		
G117						6.00	"		600		
G119						8.48	"		848		
G121						4.14	"		414		
G123						10.01	"		1010		
G129											194

NUCLEAR ENERGY SERVICES

ACTIVATION ANALYSIS REPORT

CLIENT Dr. William G. DeWees
Entropy Environmentalists, Inc.
Box 12291
Research Triangle Park, N.C. 27709-2291

P. O. No. 03-4336-01
Report No. 333240-1
Date of Report 4/22/86
Phone 781-3550

EXPERIMENTAL PARAMETERS

18 Hr. Irradiation - $1.5 \times 10^{13} n/cm^2$-sec.

Monitored Decay

1500 Sec. Counts On An Ortec 35% GeLi Detector Coupled To An ND6620 Computerized Gamma Detection System

ANALYSIS RESULTS

DATA TABLE ATTACHED

Issued by: Jack N. Weaver
Jack N. Weaver
Head, Nuclear Services

B-91

LOCATED AT:
NUCLEAR ENGINEERING DEPARTMENT/N. C. STATE UNIVERSITY/RALEIGH, N. C. [illegible]

TABLE 1

NAA Of Cr In Filters And Solutions

Sample Description	ugrams Cr/sample	
G93	1.634 ± 5.1%	
G94	1.451 ± 4.2%	
G95	0.988 ± 9.5%	
G96	0.352 ± 8.8%	
G91	0.941 ± 9.8%	
G92	1.839 ± 2.5%	
G97	1.742 ± 6.4%	
G98	0.294 ± 14.7%	
G99	1.844 ± 4.6%	
G100	0.591 ± 9.6%	
G117	5.931 ± 1.9%	
G118	1.314 ± 3.7%	
G119	11.946 ± 1.2%	
G120	0.380 ± 12.5%	
G121	5.788 ± 1.8%	
G122	0.371 ± 12.6%	
G123	8.774 ± 1.5%	
G124	0.276 ± 15.0%	
G125	0.261 ± 20.0%	
G128	0.063 ± 20.0%	
G129	20.691 ± 0.5%	
NBS SRM 1084	102.25 ppm	(100.0 ± 3.0 ppm)
NBS SRM 1084	102.33 ppm	(100.0 ± 3.0 ppm)
NBS SRM 1572	0.807 ppm	(0.8 ± 0.2 ppm)
NBS SRM 1575	2.580 ppm	(2.6 ± 0.2 ppm)
NBS SRM 1575	2.630 ppm	(2.6 ± 0.2 ppm)

NOTES: (1.) The values shown in brackets are the certified or best known values for Chromium in these NBS Standard Reference Materials analyzed together with these samples.

(2.) The Chromium Standards used in this analyses are Environmental Protection Agency Standard No. SPEX Ind., NCSL-1, Lot No. 182.

NOTES Continued

(3.) Other elements easily detected in the filter samples were Hg, Cd, Sb, Br, Na, Ni, Co, Fe, Se, Zn, and Sc.

(4.) A longer decay time to allow high Na-24 gamma activity to decay would provide lower error limits on the Cr results.

APPENDIX C

SAMPLING AND ANALYTICAL PROCEDURES

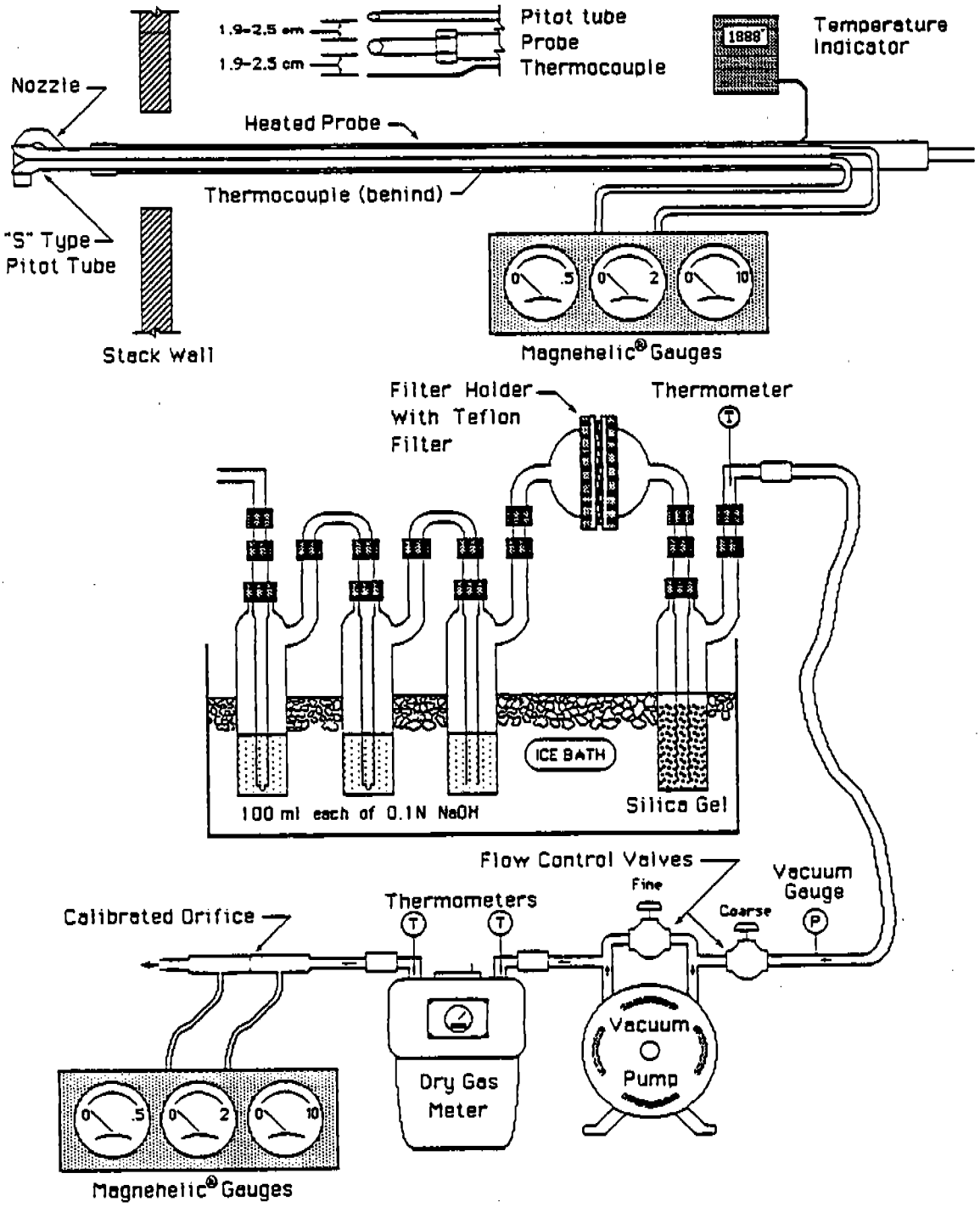

Figure C-1. Method 13-Type Impinger Train.

Temperature Gauge - A Chromel/Alumel type-K thermocouple was attached to the pitot tube, in an interference-free arrangement, to monitor stack gas temperature within 1.5°C (5°F) using a digital readout.

Filter Holder - The filter holder was made of Pyrex glass.

Filter - A nominal 85-mm (3-in.) diameter Teflon filter was used.

Draft Gauge - The draft was measured with an inclined manometer.

Impingers - Four Greenburg-Smith design impingers were connected in series with screw-type connectors. The third and fourth impingers were modified by removing the tip and extending the tube to within 1.3 cm (0.5 in.) of the bottom of the flask.

Metering System - The metering system consisted of a vacuum gauge, a leak-free pump, thermometers capable of measuring temperature to within 1.5°C (5°F), a calibrated dry gas meter, and related equipment, to maintain an isokinetic sampling rate and to determine sample volume.

Barometer - An aneroid type barometer was used to measure atmospheric pressures to 0.3 kPa (0.1 in. Hg).

SAMPLING PROCEDURES

After the sampling site and minimum number of traverse points were selected, the stack pressure, temperature, moisture, and range of velocity head were measured according to procedures described in the Federal Register.*

Approximately 200 grams of silica gel was weighed and placed in a sealed impinger prior to each test. One hundred (100) milliliters of 0.1N sodium

---

*43 FR 11984, 3/23/78 (Methods 1-5).

hydroxide (NaOH) was placed in each of the first three impingers; the Teflon filter in the filter holder followed by the third impinger; and the fourth impinger containing the silica gel was placed after the filter. The train was set up as shown in Figure C-1. The sampling train was leak-checked at the sampling site prior to each test run by plugging the inlet to the nozzle and pulling a 50 kPa (15 in. Hg) vacuum, and at the conclusion of the test by plugging the inlet to the nozzle and pulling a vacuum equal to the highest vacuum reached during the test run.

The pitot tube and lines were leak-checked at the test site prior to each test run and at the conclusion of each test run. The check was made by blowing into the impact opening of the pitot tube until 7.6 cm (3 in.) or more of water was recorded on the Magnehelic® gauge and then capping the impact opening and holding it for 15 seconds to assure it was leak-free. The same procedure was used to leak-check the static pressure side of the pitot tube, except suction was used to obtain the 7.6 cm (3 in.) H_2O manometer reading. Crushed ice was placed around the impingers to ensure that the temperature of the gases leaving the last impinger was at 20°C (68°F) or less.

During the sampling, stack gas and sampling train data were recorded at each sampling point and whenever significant changes in stack flow conditions occurred. Isokinetic sampling rates were set throughout the sampling period with the aid of a nomograph or calculator. All sampling data were recorded on the field data sheets.

SAMPLE RECOVERY PROCEDURES

The sampling train was carefully moved from the test site to the cleanup area. The volume of reagent from the first three impingers was measured, and

the silica gel from the fourth impinger was weighed to the nearest 0.1 gram. Sample fractions were recovered as follows:

Container No. 1 - The Teflon filter was removed from its holder and placed in a petri dish and sealed.

Container No. 2 - After being measured, the contents of the first impinger of the sampling train were placed in a glass or polyethylene container. The impinger was rinsed with 0.1N NaOH and this rinse added to the container. All sample-exposed surfaces prior to the first impinger (including the nozzle, probe, filter bypass, and glass "L") were rinsed with 0.1N NaOH and these rinses were also added to the container. The probe was brushed while rinsing to remove any adhered chromium.

Container No. 3 - After being measured, the contents of the second impinger were placed in a glass or polyethylene container. The impinger was rinsed with 0.1N NaOH and this rinse was added to the container.

Container No. 4 - After being measured, the contents of the third impinger were placed in a glass or polyethylene container. The impinger and the front half of the filter holder were rinsed with 0.1N NaOH and these rinses were added to the container.

Container No. 5 - A minimum of 200 mL of 0.1N NaOH was taken for blank analysis. The blank was obtained and treated in a manner similar to the impinger rinsings.

Container No. 6 - An unused Teflon filter was taken for blank analysis.

Data was recorded on the appropriate sample recovery and laboratory data sheets.

SAMPLE AND REAGENT PREPARATION

Samples for analysis and reagents were prepared as described in the following subsections.

Reagents

All reagents conformed to the specifications established by the Committee on Analytical Reagents of the American Chemical Society. In all cases, the water used was deionized and distilled and met the ASTM specifications for type 2 reagent - ASTM Test Method D 1193-77. Solutions were made as follows:

Digestion Solution - 20.0 g of NaOH and 30.0 g anhydrous Na_2CO_3 were dissolved in water in a 1-liter volumetric flask, and this solution diluted to the mark. It was stored in a tightly capped polyethylene bottle and was prepared fresh monthly.

Potassium Dichromate Stock Solution - 141.4 mg of analytical reagent grade $K_2Cr_2O_7$ was dissolved in water, and this solution diluted to 1 liter (1 mL = 50 ug Cr^{+6}).

Potassium Dichromate Standard Solution - 10.00 mL of $K_2Cr_2O_7$ stock solution was diluted to 100 mL (1 mL = 5 ug Cr^{+6}) with water.

Sulfuric Acid - A ten percent (v/v) solution was made by diluting 10 mL H_2SO_4 to 100 mL in water.

Acetone - Same as Method 5.

Diphenylcarbazide Solution - 250 mg of 1,5-diphenylcarbizide was dissolved in 50 mL acetone and stored in a brown bottle. The solution was discarded whenever it became discolored.

Sample Preparation

To prevent the possibility of sample deterioration, all samples were protected from extreme heat, were kept dry, and were analyzed within one month of collection. Sample preparation procedures varied depending upon whether the sample was a filter sample, impinger sample, or process sample.

Filter sample preparation involved digestion and filtration. The contents of Container No. 1 (the Teflon filter) was cut into small pieces and put into a beaker; digestion solution (40 mL) was added and the beaker covered with a watch glass. Using a hot plate, this solution was heated to near boiling with constant stirring for 30 minutes; it was not allowed to evaporate to dryness. The solution was then cooled and transferred quantitatively to the filtration apparatus with water. This apparatus consisted of a vacuum unit constructed of plastic or glass accomodating a 47 mm diameter, 3.0 um pore size Teflon filter. The solution was filtered and transferred quantitatively to a 100 mL volumetric flask which was then filled to the mark with water.

Impinger samples were prepared by two different techniques. For the standards setting tests (runs MO-1 through MO-4 and MI-1 through MI-4), each sample was initially filtered. The filtered residue was analyzed for total chromium using Neutron Activation Analysis (described in the section on Total Chromium Determination) and the filtrate was analyzed for hexavalent chromium using the tentative method for hexavalent chromium. The total chromium results were then calculated by summing the results for the hexavalent chromium in the filtrate and the results for the chromium in the filtered residue. For all the methods development tests, two aliquots were taken from each impinger sample. One unfiltered aliquot was analyzed for hexavalent chromium by the tentative method described previously; the other unfiltered aliquoted was analyzed

directly for total chromium using Inductively-Coupled Argon Plasmagraphy (ICAP). The use of ICAP for analysis of total chromium in the method development samples was not as accurate as NAA; however this technique was used for a time and cost savings.

The liquid process samples were not filtered. They required significant dilution prior to analysis by the diphenylcarbazide colorimetric method. For the tank and demister rinse process samples, 1 mL of the sample was first diluted to 100 mL in a volumetric flask using deionized distilled water. Then, depending upon the concentration of chromium in the particular sample, 1, 5, and 10 mL aliquots of the diluted sample were diluted to 100 mL with deionized water in another volumetric flask.

To serve as blanks, (1) a representative amount of 0.1N NaOH and (2) an unused Teflon filter were prepared in the same manner as the samples described above. The spent silica gel was weighed to the nearest 0.5 g using a balance.

SAMPLE ANALYSIS

Analysis of the samples involved four basic elements: (1) color development and measurement, (2) a check for matrix results on the Cr^{+6} results, (3) calibration of the spectrophotometer, and (4) calculation of the results.

Color Development and Measurement

An aliquot of the prepared sample 50 mL or smaller was transferred to a 100 mL volumetric flask and diluted with sufficient water to bring the volume to approximately 80 mL. The pH was adjusted to 2 $\pm$ 0.5 with 10 percent H_2SO_4, 2.0 mL of diphenylcarbazide solution was added, and this solution diluted to volume with water. The solution then stood about 10 minutes for color development. For each set of samples analyzed, an identical

aliquot of reagent blank solution was treated in the same way.

To measure, a portion of the sample was transferred to a 1-cm absorption cell, and the absorbance read at the optimum wavelength as determined during spectrophotometer calibration. After each sample measurement, the reagent blank absorbance reading, if any, was subtracted to obtain a net reading. If the absorbance of the sample exceeded the absorbance of the 100 ug Cr^{+6} standard as determined during calibration, the sample and the reagent blank were diluted with equal volumes of water.

Check for Matrix Effects on the Cr^{+6} Results

Since the analysis for Cr^{+6} by colorimetry is sensitive to the chemical composition of the sample (matrix effects), at least one sample from each source was checked using the method of additions as follows:

Two equal volume aliquots of the same sample solution were taken; each contained between 30 and 50 ug of Cr^{+6} (less if that was not possible). One of the aliquots was spiked with an aliquot of standard solution containing 30 to 50 ug of Cr^{+6}. Then both the spiked and unspiked sample aliquots were readied for measurement as described in the previous section.

The Cr^{+6} mass, C_s, in ug in the aliquot of the unspiked sample solution was then calculated using the following equation:

$$C_s = C_a \frac{A_s}{A_t - A_s} \qquad \text{Equation C-1}$$

Where:

C_a = Cr^{+6} in the standard solution, ug.
A_s = Absorbance of the unspiked sample solution.
A_t = Absorbance of the spiked sample solution.

Volume corrections were not required since the solutions as analyzed were made to the same final volume. When the results of the method of additions procedure used on the single source sample did not agree within 10 percent of the value obtained by the routine spectrophotometric analysis, all samples from the source were reanalyzed using the method of additions procedure.

SPECTROPHOTOMETER CALIBRATION

Calibration of the spectrophotometer involved two basic sets of operations and these are described below.

Optimum Wavelength Determination

Every 6 months, the wavelength scale of the spectrophotometer was calibrated using an energy source with an intense line emission or a series of glass filters spanning the measuring range of the spectrophotometer. The spectrophotometer was checked to see that the wavelength scale read within ± 5 nm at all calibration points. After confirming that the wavelength scale ofthe spectrophotometer was in proper calibration, 540 nm was used as the optimum wavelength for the measurement of the absorbance of the standards and samples.

In some cases, a scanning procedure was employed to determine the proper measuring wavelength. For both the blank and a 50 ug Cr^{+6} standard solution, the spectrum was scanned between 530 and 550 nm. The optimum wavelength was chosen as the wavelength at which the maximum difference in absorbance between the standard and the blank occurred.

Spectrophotometer Calibration

To calculate the spectrophotometer calibration factor, 0.0 mL, 1 mL, 2 mL, 5 mL, 10 mL, 15 mL, and 20 mL of the working standard solution (1 mL = 5 ug

Cr^{+6}) were added to a series of seven 100-mL volumetric flasks. These calibration standards were analyzed as described in the section on color development and measurement. The calibration procedure was repeated on each day that samples were analyzed. The spectrophotometer calibration factor, K_c, was calculated using the following equation:

$$K_c = 5 \frac{A_1 + 2A_2 + 5A_3 + 10A_4 + 15A_5 + 20A_6}{A_1^2 + A_2^2 + A_3^2 + A_4^2 + A_5^2 + A_6^2} \qquad \text{Equation C-2}$$

Where:

K_c = Calibration factor.
A_1 = Absorbance of the 5 ug Cr^{+6} standard.
A_2 = Absorbance of the 10 ug Cr^{+6} standard.
A_3 = Absorbance of the 25 ug Cr^{+6} standard.
A_4 = Absorbance of the 50 ug Cr^{+6} standard.
A_5 = Absorbance of the 75 ug Cr^{+6} standard.
A_6 = Absorbance of the 100 ug Cr^{+6} standard.

Spectrophotometer Calibration Quality Control

The absorbance value obtained for each standard was multiplied by the K_c factor (least squares slope) to determine the distance each calibration point was from the theoretical calibration line. To maintain quality control, it was assured that these concentration values did not differ from the actual concentrations (i.e., 5, 10, 25, 50, 75, and 100 ug Cr^{+6}) by more than 7 percent (to be determined) for five of the six standards.

EMISSION CALCULATIONS

All emission calculations were done retaining at least one extra decimal figure beyond that of the acquired data. Figures were rounded off after final calculations.

Total Cr^{+6} in Sample

The total ug Cr^{+6} in each sample, m, was calculated as follows:

$$m = \frac{100\ K_c\ AF}{v_a} \qquad \text{Equation C-3}$$

Where:

100 = Volume in mL of total sample.

A = Absorbance of sample.

F = Dilution factor (required only if sample dilution was needed to reduce the absorbance into the range of calibration.)

v_a = Volume in mL of aliquot analyzed.

Average Dry Gas Meter Temperature and Average Orifice Pressure Drop

The average dry gas meter temperature and average orifice pressure drop was calculated as described in Method 5.

Dry Gas Volume, Volume of Water Vapor, Moisture Content

The dry gas volume, volume of water vapor, and moisture content was calculated as described in Method 5.

Cr^{+6} Emission Concentration

The Cr^{+6} concentration in the stack gas, C_s (g/dscm), dry basis, corrected to standard conditions was calculated as follows:

$$C_s = (10^{-6} g/ug)\ (m/V_{m(std)}) \qquad \text{Equation C-4}$$

Isokinetic Variation, Acceptable Results

Isokinetic variation and acceptable results were calculated as described in Method 5.

DETERMINATION OF TOTAL CHROMIUM CONTENT

Samples were collected using an EPA Method 13-type impinger train and Method 5 sampling procedures as described in the Federal Register* or particle sizing equipment (see section on "Determination of Particle Size Distribution"). These samples were prepared and then analyzed for total chromium content using Neutron Activation Analysis (NAA). This was done following the procedures in the "EPA Protocol for Emissions Sampling for Both Hexavalent and Total Chromium," dated February 22, 1985.**

SAMPLING APPARATUS

The sampling train used in these tests was the same as described in the previous section, "Determination of Hexavalent Chromium Emissions". No sample-exposed stainless steel or chrome-plated equipment was used with the exception of the sample nozzle. Teflon filters were used as backup filters and paper filters were used for particle size testing. These trains met design specifications established by the U. S. EPA and were assembled by Entropy personnel.

SAMPLING PROCEDURES

The sampling procedures were performed as described in the previous section, "Determination of Hexavalent Chromium Emissions" (or as described in

*43 FR 11984, 3/23/78 (Method 5) and 43 FR 41852, 6/20/80 (Method 13).

**For Chromium Screening Study ESED No. 85/02 and 85/02a, U. S. Environmental Protection Agency, Emission Measurement Branch, Research Triangle Park, North Carolina.

the section on particle size determination sampling procedures). All sampling data were recorded on the field data sheets.

SAMPLE RECOVERY PROCEDURES

Following sample recovery, all samples were kept dry, protected from extreme heat, and analyzed within one month of collection.

SAMPLE PREPARATION

In the case of the filter samples collected using the EPA Method 13-type impinger train, they were analyzed first for hexavalent chromium content (as described in the previous section) and then for total chromium content using NAA.

For the impinger and process samples, two sample preparation techniques were used. The standard setting samples were filtered and the filtered residue was analyzed by NAA. The total chromium results were then calculated by summing the results for the total chromium in the filtered residue and the hexavalent chromium in the filtrate (see previous section on Determination of Hexavalent Chromium). An aliquot of the methods development samples were analyzed directly for total chromium by ICAP.

All samples prepared for NAA were put into suitable sample vials which had been properly prepared. Procedures for this are described below. The subsections which follow describe the sample and blank preparation procedures used for the various categories of sample states.

Sample Preparation Apparatus

No chrome-plated or stainless steel equipment was used. The following items were also required:

Analytical Balance - To determine weight of material submitted for total chromium analysis to within 0.1 mg.

Polyethylene Sample Vials - Five (5) mL size to contain samples submitted for total chromium.

Teflon Spatula - To assist in sample transfer.

Teflon Gloves - To be used for sample handling.

Preparation of Sample Vials

For use in the analytical phase, sample vials were prepared in the following manner. All vials were initially cleaned with soap and water, rinsed with tap water, soaked for 48 hours in a rinse solution of 1 to 1 (v/v) water and concentrated nitric acid, and finally rinsed with deionized-distilled water. After the vials dried, each was marked on both sides with the appropriate sample identification number using a permanent pen (water insoluble). All sample identification numbers, volumes, and weights were recorded on the Sample Preparation and Analysis Data Forms.

Preparation and Analysis for Filter Samples

Initially, the entire sample was analyzed for hexavalent chromium by the EPA Cr^{+6} Method described in the previous section. The sample residue (Teflon sample filter, filtration filter, and insoluble materials) for each run was then transferred to a separate cleaned and marked sample vial.

The filter blank consisted of the blank residue, a blank Teflon sample filter, and a solution filtration filter that had been prepared in the same manner as the field samples. This was transferred to a separate cleaned/marked sample vial.

All samples were analyzed for total chromium in terms of ug of total chromium per sample vial.

Preparation and Analysis for Impinger and Liquid Process Samples

Initially, a representative portion of the prepared impinger or liquid

process sample (50 or 5 mL, respectively) was analyzed for hexavalent chromium by the EPA Cr^{+6} method. For total chromium analysis, a separate representative portion of the impinger or process sample (1 to 5 mL and generally < 2 ml) containing greater than 1 ug/mL of total chromium was transferred to a sample vial for analysis. Representative portions were taken according to EPA Method 160.2 (EPA-600/4-79-020, March 1974). No sample blank was required.

Procedures to Reduce NAA Time

For all samples that were placed in sample vials, an estimate of the mass of chromium was included on the sample log to provide the NAA facility with the information necessary to select the proper sample irradiation time and strength. When possible, all samples were added to the sample vials in amounts that ensured the mass of chromium per sample was between 10 ug and 5,000 ug. When the total chromium value was not known, samples were prepared so that each sample vial contained between 5 ug and 100 ug of hexavalent chromium. These procedures were followed to allow all known value samples to be irradiated at the same time and strength.

When the sample concentration was unknown or possibly could have exceeded 5,000 ug of total chromium, such was noted on the sample log sheet. A preliminary run on the material was then made to estimate the sample concentration.

When liquid impinger or process samples or the 1.0 mL aliquot of the filtrate from the hexavalent analysis were below the 10 ug of total chromium value, total mass of chromium was recorded on the data sheet to allow these samples to be irradiated separately for a longer time and to allow for the selection of a lower concentration standard.

Quality Assurance Sample Analysis

One audit sample was submitted with the field samples to check the analytical technique.

SAMPLE ANALYSIS

Sample analysis for total chromium content was done using Neutron Activation Analysis (NAA) and was conducted by the Department of Nuclear Engineering at North Carolina State University in Raleigh. In brief, NAA is based on the determination of the number and energy of gamma and/or x-rays emitted by radioisotopes produced in a sample matrix by neutron irradiation. Quantitative analysis is obtained by comparing the x- or gamma-rays of the sample with the number determined for a standard that has been subjected to the identical irradiation.

The samples (prepared as described) were heat-sealed in the 25-mL polyethylene vials. Chromium standards were similarly sealed in identical vials. Sets of samples and standards were irradiated for a predetermined neutron fluence. They were then allowed to radiate for a minimum of 10 days prior to analysis to eliminate possible inference from sodium and cobalt which have short half-lives. After this time, samples and standards were counted on a solid state detector connected to a multichannel analyzer.

Results were reported for samples in terms of total ug of chromium for the sample.

CALCULATIONS

Chromium emissions and concentrations were calculated as described below.

Emission Calculations for Hexavalent Chromium

Hexavalent chromium emissions were calculated as described in the EPA Cr^{+6} Method (see previous section).

Emission Calculations for Total Chromium

The total chromium emissions, C_s (ug/dscm), were calculated as follows:

$$C_s = (m_r - m_b) + (m_h) / V_{m(std)}$$ Equation C-5

Where:

C_s = Stack gas concentration, g/dscm.

m_r = Mass of Cr in residue and impinger samples, ug.

m_b = Mass of Cr in residue and NaOH blanks, ug.

m_h = Mass of Cr in filtrate solution (Cr^{+6}) minus blank, ug.

$V_{m(std)}$ = Volume of gas sampled, corrected to standard conditons, dscm.

Note: In some cases, the mass of Cr was calculated separately, for the filter/rinse sample and impinger contents sample, or the masses of both samples and both blanks were added to obtain the total concentration.

Calculation of Chromium in Solid Process Samples

The chromium concentration in solid process samples, C_o (ug/g), was calculated as follows:

$$C_o = (m_s - m_b)/wt$$ Equation C-6

Where:

C_o = Concentration of chromium in process sample, ug/g.

m_s = Mass of Cr in process sample, ug.

m_b = Mass of Cr in blank sample (if applicable), ug.

wt = Weight of sample analyzed, g.

Calculation of Chromium in Liquid Process Samples

The chromium concentration in liquid process samples, C_l (ug/mL), was calculated as follows:

$$C_l = (m_s/2)\ (V_f/V_i)$$ Equation C-7

Where:

C_l = Concentration of chromium in liquid sample, ug/mL.

m_s = Mass of Cr in liquid process sample, ug.

2 = 2.0 mL aliquot analyzed.

V_f = Final volume if a sample is concentrated, mL.

V_i = Initial volume of sample concentrated, mL.

DETERMINATION OF PARTICLE SIZE DISTRIBUTION

In-stack, multistage, cascade impactors were used to collect samples for particle size distribution measurements. The following sampling and analytical procedures were used.

SAMPLING APPARATUS

The source sampling train used in these tests met design specifications established by the U. S. EPA. Assembled by Entropy personnel, it consisted of:

Nozzle - Stainless steel (316) with sharp tapered leading edge and accurately measured round opening.

Impactor - An Andersen Mark III with eight stages and a backup filter was used. The Andersen impactor uses 6.4 cm (2.5 in.) diameter filters. A right angle nozzle/preseparator was attached to the front of the impactor.

Outhouse?

Condenser - A moisture-removal device capable of maintaining a temperature less than 20°C (68°F) and an attached thermometer to monitor temperature.

Temperature Gauge - A Chromel/Alumel type K thermocouple (or equivalent) was attached to the probe to monitor stack gas (impactor) temperature to within 1.5°C (5°F) using a digital readout.

Metering System - Vacuum gauge, leak-free pump, thermometers capable of measuring temperature to within 1.5°C (5°F), a dry gas meter

with 2 percent accuracy, and related equipment to maintain an isokinetic sampling rate and to determine sample volume. The dry gas meter was made by Rockwell, and the fiber vane pump was made by Gast.

Barometer - An aneroid type barometer to measure atmospheric pressures to 0.3 kPa (0.1 in. Hg).

Collection Substrate (Filters) - Schleicher & Schuell® #30 glass fiber filters heated 1 to 2 hours at 204°C (400°F) and desiccated 24 hours to a constant weight.

SAMPLING PROCEDURES

The stack pressure, temperature, moisture, and velocity pressure of the selected sampling sites were measured with Method 5 equipment according to procedures described in the Federal Register*.

Assembly of the Andersen Mark III involved starting with the solid filter backup stage and then alternating the stage plates, collection media, and Inconel spacer rings so as to provide eight cut-sizes (see Figure C-2). The collection substrates (filters) had been heated to a 204°C (400°F) oven for 1 or 2 hours, conditioned in a dessicator for 24 hours to a constant weight, and weighed to the nearest 0.01 mg on an analytical balance. The preseparator was threaded together and attached to the front of the impactor.

The sampling train was then assembled. It was leak-checked at the sampling site prior to each test run by plugging the inlet to the impactor or preseparator and pulling a 50-kPa (15-in. Hg) vacuum. Once the desired vacuum was reached, the leakage rate was checked at the dry gas meter for 1 minute. If the leak rate was less than 0.6 liter/min (0.02 cfm), the train was

*43 FR 11984, 3/23/78 (Methods 1-5).

Loading Sequence

Ring
#0 Stage
Ring
Lowest #B Filter
#1 Stage

Ring
Lowest #A Filter
#2 Stage

Ring
3rd Highest #B Filter
#3 Stage

Ring
3rd Highest #A Filter
#4 Stage

Ring
2nd Highest #B Filter
#5 Stage

Ring
2nd Highest #A Filter
#6 Stage

Ring
Highest #B Filter
#7 Stage

Ring
Highest #A Filter
#8 Stage

Ring
Solid Filter
Extra Stage
Ring

Load From Botton to Top

Stage Holder

Ring Cross Section

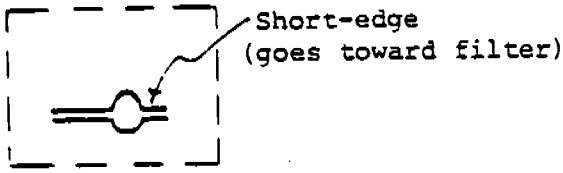

Plate - Stage Holder Allignment

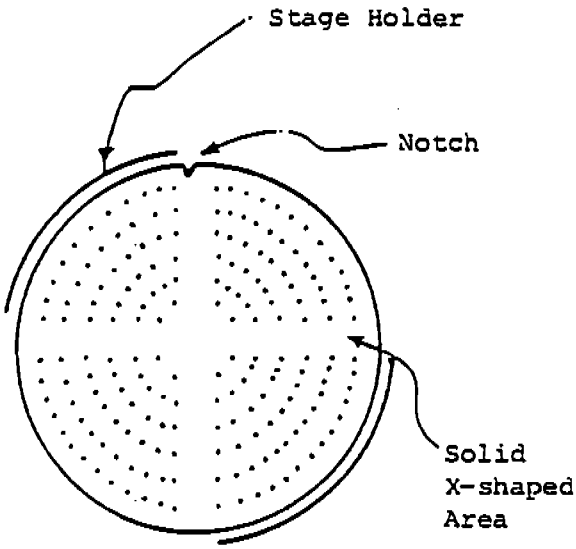

Figure C-2. Andersen Mark III Cascade Impactor Loading Sequence.

considered ready for sampling. Any excessive leaks were corrected before the train was used. The impactor was then placed at the selected sampling point and allowed to preheat for several minutes before sampling began. While the impactor was preheating, the nozzle was capped or pointed away from the gas flow. A leak-check was not performed after the test run so as to avoid the possibility of dislodging the particles on individual stages.

METHODS DEVELOPMENT
VARIATIONS IN SAMPLING TRAIN CONFIGURATION, SAMPLE RECOVERY, AND SAMPLE ANAYSIS

As part of the sampling program conducted at Greensboro Industrial Platers, a number of methods development test runs were conducted using the "paired train" sampling technique. The paired train technique utilizes two trains sampling simultaneously at the same point in the stack so that comparisons may be made between the values obtained from the two trains; the assumption is made that the two trains are sampling essentially the same emissions.

During the first week of testing, standards setting emissions testing was conducted at the mist eliminator inlet and outlet using an impinger train (backup filter between the third and fourth impingers) with 0.1N NaOH as the impinger reagent. It was designated "Train A" for the week of testing (but redesignated Train #1 for the purposes of clarity in this explanation). The train configuration and sample recovery and analysis is described in the previous sections of this appendix.

During the same week, paired train method development testing was conducted at the uncontrolled exhaust duct of plating tank No. 5 using (1) the train described previously (Train #1) and (2) an identical train with the substitution of distilled water for the 0.1N NaOH in the impingers (Train B for the week of testing, but Train #2 in this explanation). Samples in the impingers from Train #1 were analyzed separately to measure collection efficiency; samples from Train #2 were split (see Figure C-3) to study the effect of addition of NaOH and sample standing time on the conversion of hexavalent to trivalent chromium.

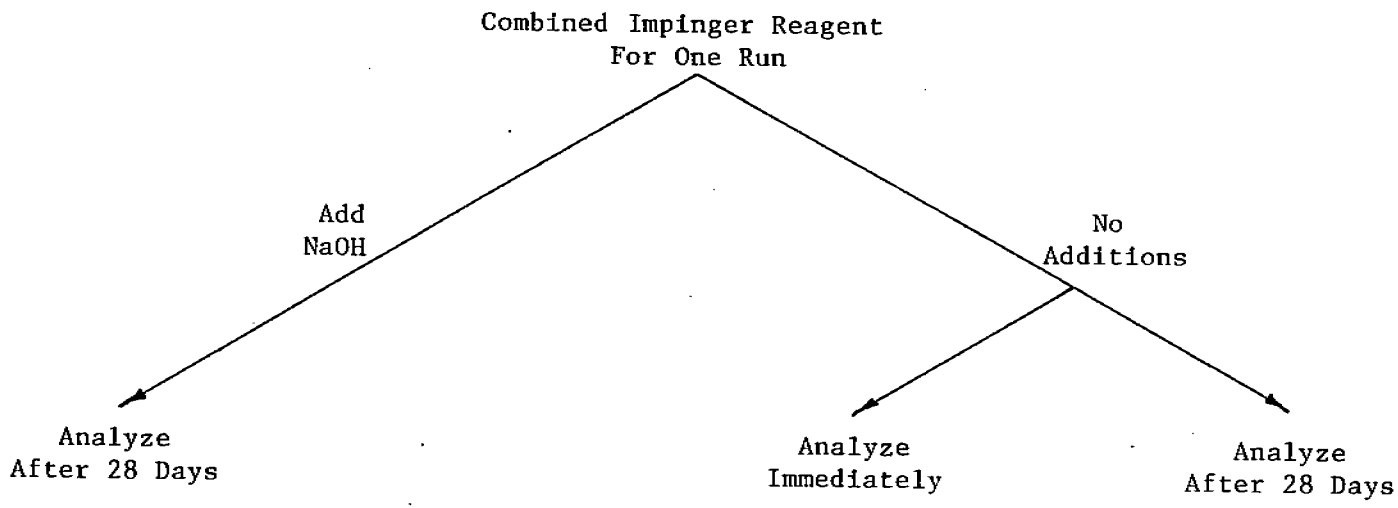

Figure C-3. Sample Splits for Train #2

During the second week, "paired train" testing was conducted at the exhaust duct of tank No. 5 and the mist eliminator outlet using two additional trains. The first of these, designated "Train A" for the week (but redesignated Train #3 so as not to be confused with Train #1, also Train A), was similar to the Train A (Train #1) used the first week. The difference was that 0.1N NaOH was used as the reagent only in the first two impingers with the third impinger remaining dry. The second train used during the second week of testing, Train #4 (Train B for the week) had a Method 5 train configuration with a glass fiber filter, 0.1N NaOH in the first two impingers, the third impinger dry, and silica gel in the fourth impinger. See Table C.1 for a tabular summary of the sampling trains, test locations, and train designations.

In general, methods development samples were collected using the Method 5 sampling procedures described in the Federal Register*. One important exception was that the paired train sampling was only conducted at a single point within the duct since it was not necessary to obtain samples representative of the actual emissions. Other train-specific modifications, configuration, and sampling procedures are described in the following sections. Samples collected were generally analyzed for hexavalent and total chromium as described in the first two sections of this appendix. Any variations in sample recovery or analytical procedures required for the specific methods development trains are also detailed in the following three sections.

TRAIN 2: CONFIGURATION AND SAMPLE RECOVERY AND ANALYSIS

Sampling Apparatus and Procedures

The EPA Method 13-type impinger train used met design specifications

---

* 43 FR 11984, 3/23/78.

TABLE C.1. SUMMARY OF SAMPLING TRAINS USED

Date	Test Location	Type of Testing	Train Designation: During Testing	Train Designation: In Description	Impinger Reagent	Filter	Number of Runs
3/18	Tank #5 Exhaust Duct	Methods Development	A	#1	NaOH	Backup Teflon	3 Paired
		Methods Development	B	#2	H_2O	Backup Teflon	
3/18	Tank #6 Mist Eliminator Inlet	Standards Setting	A	#1	NaOH	Backup Teflon	2
	Tank #6 Mist Eliminator Outlet	Standards Setting	A	#1	NaOH	Backup Teflon	2
3/19	Tank #5 Exhaust Duct	Methods Development	A	#1	NaOH	Backup Teflon	3 Paired
		Methods Development	B	#2	H_2O	Backup Teflon	
3/19	Tank #6 Mist Eliminator Inlet	Standards Setting	A	#1	NaOH	Backup Teflon	2
	Tank #6 Mist Eliminator Outlet	Standards Setting	A	#1	NaOH	Backup Teflon	2
3/24	Tank #5 Exhaust Duct	Methods Development	A	#3	NaOH	Backup Teflon	2 Paired
		Methods Development	B	#4	NaOH	M5 Glass Fiber	
3/25	Tank #5 Exhaust Duct	Methods Development	A	#3	NaOH	Backup Teflon	4 Paired
		Methods Development	B	#4	NaOH	M5 Glass Fiber	
3/26	Tank #5 Exhaust Duct	Methods Development	A	#3	NaOH	Backup Teflon	2 Paired
		Methods Development	B	#4	NaOH	M5 Glass Fiber	
3/26	Tank #6 Mist Eliminator Outlet	Methods Development	A	#3	NaOH	Backup Teflon	3 Paired
		Methods Development	B	#4	NaOH	M5 Glass Fiber	

established by the EPA. The sampling apparatus was assembled by Entropy personnel and was the same as that described in the section entitled "Determination of Hexavalent Chromium Emissions". Approximately 200 grams of silica gel was weighed and placed in the fourth impinger. One hundred (100) milliliters of deionized distilled water was placed in each of the first two impingers; the third impinger was left dry; and a Teflon filter was placed in the filter holder located in between the third and fourth impingers.

Sample Recovery Procedures

The volume of reagent in the first two impingers was measured, and the silica gel from the fourth impinger was weighed to the nearest 0.1 gram. Sample fractions were recovered as follows:

Container No. 1 - The Teflon filter was removed from its holder and placed in a petri dish and sealed.

Container No. 2 - After being measured, the distilled water and moisture collected in the first three impingers of the sampling train were placed in a glass or polyethylene container. The impingers were rinsed with distilled water and these rinses were added to the container. All sample-exposed surfaces prior to the first impinger including the nozzle, probe, filter bypass, and glass "L" were rinsed with distilled water and these rinses were also added to the container. The probe was brushed while rinsing to remove any adhered chromium.

Container No. 3 - A minimum of 200 mL of distilled water was taken for blank analysis. The blank was obtained and treated in a manner similar to the impinger washings.

Container No. 4 - An unused Teflon filter was taken for blank analysis.

Container No. 5 - A minimum of 200 mL of 0.1N NaOH was taken for blank analysis.

As previously described, the combined impinger and rinse sample from each run was initially split two ways and to one-half was added solid NaOH (approximately 0.6 g to make the solution basic, as confirmed with litmus paper). Nothing was added to the other half. Each of these two portions was then further split resulting in a total of four split samples. As shown in Figure C-2, a portion of the impinger reagent with NaOH added and a portion with nothing added were each analyzed immediately. A second portion with and without NaOH added was put aside and then analyzed after 30 days.

Sample Preparation and Analysis

The impinger and filter samples were prepared for analysis and analyzed for hexavalent chromium as described previously in this appendix in the section on "Determination of Hexavalent Chromium Emissions" and analyzed for total chromium content as described in the section on "Determination of Total Chromium Emissions".

TRAIN #3: CONFIGURATION AND SAMPLE RECOVERY AND ANALYSIS

Sampling Apparatus and Procedures

The EPA Method 13-type impinger train used met design specifications established by the EPA. The sampling apparatus was assembled by Entropy personnel and was the same as that described in the section entitled "Determination of Hexavalent Chromium Emissions". Approximately 200 grams of silica gel was weighed and placed in the fourth impinger. One hundred (100) milliliters of 0.1N NaOH was placed in each of the first two impingers; the

third impinger was left dry; and a Teflon filter was placed in the filter holder located in between the third and fourth impingers.

Sample Recovery Procedures

The volume of reagent in the first three impingers was measured, and the silica gel from the fourth impinger was weighed to the nearest 0.1 gram. Sample fractions were recovered as follows:

Container No. 1 - The Teflon filter was removed from its holder and placed in a petri dish and sealed.

Container No. 2 - After being measured, the 0.1N NaOH and moisture collected in the first three impingers of the sampling train were placed in a glass or polyethylene container. The impingers were rinsed with 0.1N NaOH and these rinses were added to the container. All sample-exposed surfaces prior to the first impinger including the nozzle, probe, filter bypass, and glass "L" were rinsed with 0.1N NaOH and these rinses were also added to the container. The probe was brushed while rinsing to remove any adhered chromium.

Container No. 3 - An unused Teflon filter was taken for blank analysis.

Container No. 4 - A minimum of 200 mL of 0.1N NaOH was taken for blank analysis.

Sample Preparation and Analysis

The impinger and filter samples were prepared for analysis and analyzed for hexavalent chromium as described previously in this appendix in the section on "Determination of Hexavalent Chromium Emissions" and analyzed for total chromium content as described in the section on "Determination of Total Chromium Emissions".

TRAIN #4: CONFIGURATION AND SAMPLE RECOVERY AND ANALYSIS

Sampling Apparatus and Procedures

The EPA Method 5-type impinger train used met design specifications established by the EPA. The sampling apparatus was assembled by Entropy personnel and was the same as that described in the section entitled "Determination of Hexavalent Chromium Emissions" with the exception that a nominal 79-mm (3-in.) diameter glass fiber filter was used. Approximately 200 grams of silica gel was weighed and placed in the fourth impinger. One hundred (100) milliliters of 0.1N NaOH was placed in each of the first two impingers and the third impinger was left dry. A glass fiber filter was placed on a clean frit in the unheated filter holder located between the probe and the first impinger.

Sample Recovery Procedures

The volume of reagent in the first two impingers was measured, and the silica gel from the fourth impinger was weighed to the nearest 0.1 gram. Sample fractions were recovered as follows:

Container No. 1 - The glass fiber filter was removed from its holder and placed in a petri dish and sealed and labeled.

Container No. 2 - All sample-exposed surfaces prior to the filter including the nozzle, probe, and front half of the filter holder were rinsed with 0.1N NaOH and these rinses were placed in a glass or polyethylene container. The probe was brushed while rinsing to remove any adhered chromium. The jar was sealed and labeled.

Container No. 3 - The frit was washed with 0.1N NaOH and these washings were placed in a glass or polethylene jar, sealed, and labeled.

Container No. 4 - After being measured, the NaOH and moisture in the impinger section of the sampling train was placed in a glass or polyethylene container. The impingers and connecting glassware were rinsed with 0.1N NaOH and this rinse was added to the container for shipment to the laboratory.

Container No. 5 - A minimum of 200mL of 0.1N NaOH was taken for the blank analysis. The blank was obtained and treated in a manner similar to the water rinse.

Container No. 6 - An unused glass fiber filter was taken for blank analysis.

Sample Preparation and Analysis

The impinger and filter samples were prepared for analysis and analyzed for hexavalent chromium as described previously in this appendix in the section on "Determination of Hexavalent Chromium Emissions" and analyzed for total chromium content as described in the section on "Determination of Total Chromium Emissions".

APPENDIX D

CALIBRATION AND QUALITY ASSURANCE DATA

CALIBRATIONS

All measuring equipment Entropy uses is initially calibrated before use. Equipment which can change calibration is both checked upon return from each field use and is also periodically recalibrated in full. When an instrument is found out of calibration, it is so noted in the report and appropriate adjustments are made to the final results. The equipment is then repaired and recalibrated or retired as needed. Specific equipment is handled as follows:

Pitot Tube - All pitot tubes used by Entropy, whether separate or attached to a sampling probe, are constructed in-house or by Nutech Corporation. Prior to their initial usage, they are calibrated using EPA geometry standards. In general, if a type "S" pitot tube is assembled correctly, and positioned properly in relation to the probe nozzle, it will have an average Cp of 0.84. As long as it is not damaged, it should not change its calibration. The recalibration schedule for pitot tubes is related to the physical condition and usage of the pitot tube, not a fixed time schedule. Each pitot tube is inspected upon return to the laboratory from each field use.

Dry Gas Meter and Orifice Meter - All Entropy meter boxes are calibrated upon purchase and at least once every six months against a secondary test meter (one calibrated against a wet test meter) according to their usage history. Basic procedures are outlined in the EPA Publication No. APTD-0576. The only differences are in the choice of flow rates used and the volumes metered at each flow rate. After each field use, quick checks are performed to ensure delta H@ changes of less than 5%. These checks compare the orifice against the dry gas meter. If greater than 5% changes occur, recalibration and repair are instituted.

Nozzles - Each nozzle is calibrated upon purchase, and thereafter whenever it becomes apparent that the nozzle has become damaged. Each nozzle is inspected upon return to laboratory from each field use. The diameter is measured on five different axes, with the high and low readings differing by no more than 0.004 inches as a tolerence.

Temperature Measuring Instruments - After each field use, the thermocouples or thermometers are calibrated against an ASTM precision mercury-in-glass thermometer across a wide range of temperatures. If the initial reading is not within $\pm$ 1.5% of the absolute temperature reading of the standard thermometer, the instrument is adjusted until it is in the acceptable range.

Magnehelic[R] Gauges - After each field use, each Magnehelic[R] Gauge is calibrated against an inclined manometer at three different settings (low, medium, high) over the range of the individual gauges. If the readings differ more than ± 5% from the manometer readings, the Magnehelics[R] are recalibrated.

Barometer - After each field use, each barometer is checked against a mercury barometer.

CALIBRATION BY: T. McDonald

METER BOX NUMBER: N-2

DATE: 1-30-86

BAROMETRIC PRESSURE (P_B): 29.7 IN. HG

*DATE: _____

*BAROMETRIC PRESSURE (P_B): _____ IN. HG

STANDARD METER NUMBER: 1017057

COEFFICIENT (Y_{DS}): 0.9942

NOMINAL FLOW RATE ($\tilde{Q}$) CFM	STANDARD DRY GAS METER			METER BOX METERING SYSTEM		
	GAS VOLUME (V_{DS}) FT^3	TEMP. (T_{DS}) °F	TIME (θ) MIN.	ORIFICE SETTING (ΔH) IN. H_2O	GAS VOLUME (V_D) FT^3	TEMP. (T_D) °F
	4.270	70	10:00	0.50	4.347	78
	4.294	70	10:00	0.50	4.369	79
	8.550	70	10:00	2.10	8.589	76
	8.583	70	10:00	2.10	8.667	79
	13.007	70	10:00	4.80	12.996	83
	12.986	70	10:00	4.80	13.034	85

NOMINAL FLOW RATE ($\tilde{Q}$) CFM	METER BOX METERING SYSTEM			
	FLOW RATE (Q_D) CFM	ORIFICE FACTOR (OF)	COEFF. (Y_D)	ΔH @ IN. H_2O
0.4			0.9901	1.546
			0.9925	1.526
0.8			0.9957	1.626
			0.9961	1.604
1.2			1.0075	1.585
			1.0066	1.584
	AVERAGE		0.998	1.58

$$\Delta H_@ = \frac{0.0317 * \Delta H}{P_b * (t_d + 460)} * \left[\frac{(t_{ds} + 460) * \theta}{Y_{ds} * V_{ds}}\right]^2$$

$$Y_d = \frac{Y_{ds} * V_{ds} * (t_d + 460) * P_b}{V_d * (t_{ds} + 460) * (P_b + \Delta H/13.6)}$$

CALIBRATION BY: T. McDonald

METER BOX NUMBER: N-5

DATE: 2-17-86

BAROMETRIC PRESSURE (P_B): 29.6 IN. HG

*DATE: _____

*BAROMETRIC PRESSURE (P_B): _____ IN. HG

STANDARD METER NUMBER: 1017057

COEFFICIENT (Y_{DS}): 0.9870

NOMINAL FLOW RATE ($\tilde{Q}$) CFM	STANDARD DRY GAS METER			METER BOX METERING SYSTEM		
	GAS VOLUME (V_{DS}) FT^3	TEMP. (T_{DS}) °F	TIME (θ) MIN.	ORIFICE SETTING (ΔH) IN. H_2O	GAS VOLUME (V_D) FT^3	TEMP. (T_D) °F
1.2	12.375	67	10:00	4.80	12.274	76
	12.318	67	10:00	4.80	12.309	79
0.8	8.112	67	10:00	2.10	8.131	80
	8.117	67	10:00	2.10	8.145	81
0.4	4.064	67	10:00	0.50	4.015	80
	4.013	67	10:00	0.50	4.035	80

NOMINAL FLOW RATE ($\tilde{Q}$) CFM	METER BOX METERING SYSTEM			
	FLOW RATE (Q_D) CFM	ORIFICE FACTOR (OF)	COEFF. (Y_D)	ΔH @ IN. H_2O
1.2			0.9911	1.818
			0.9892	1.825
0.8			0.9946	1.838
			0.9953	1.832
0.4			0.9981	1.796
			0.9954	1.788
	AVERAGE		0.994	1.82

$$\Delta H_@ = \frac{0.0317 * \Delta H}{P_b * (t_d + 460)} * \left[\frac{(t_{ds} + 460) * \theta}{Y_{ds} * V_{ds}}\right]^2$$

$$Y_d = \frac{Y_{ds} * V_{ds} * (t_d + 460) * P_b}{V_d * (t_{ds} + 460) * (P_b + \Delta H/13.6)}$$

ENTROPY

CALIBRATION BY: T. McDonald

METER BOX NUMBER: N-7

DATE: 2-18-86

BAROMETRIC PRESSURE (P_B): 29.3 IN. HG

*DATE: _____

*BAROMETRIC PRESSURE (P_B): _____ IN. HG

STANDARD METER NUMBER: 1017057

COEFFICIENT (Y_{DS}): ~~0.9870~~ 0.9780 RAE

NOMINAL FLOW RATE ($\tilde{Q}$) CFM	STANDARD DRY GAS METER			METER BOX METERING SYSTEM		
	GAS VOLUME (V_{DS}) FT^3	TEMP. (T_{DS}) °F	TIME (θ) MIN.	ORIFICE SETTING (ΔH) $IN.H_2O$	GAS VOLUME (V_D) FT^3	TEMP. (T_D) °F
0.4	4.207	69	10:00	0.50	4.195	78
	4.178	69	10:00	0.50	4.180	79
0.8	8.297	69	10:00	2.10	8.260	82
	8.268	69	10:00	2.10	8.283	84
1.2	12.432	69	10:00	4.80	12.373	87
	12.428	69	10:00	4.80	12.430	89

NOMINAL FLOW RATE ($\tilde{Q}$) CFM	METER BOX METERING SYSTEM			
	FLOW RATE (Q_D) CFM	ORIFICE FACTOR (OF)	COEFF. (Y_D)	$\Delta H@$ $IN. H_2O$
0.4			0.9962	1.662
			0.9948	1.682
0.8			1.0012	1.782
			0.9986	1.787
1.2			1.0040	1.797
			1.0027	1.792
	AVERAGE		1.000	1.75

$$\Delta H_@ = \frac{0.0317 * \Delta H}{P_b * (t_d + 460)} * \left[\frac{(t_{ds} + 460) * \theta}{Y_{ds} * V_{ds}}\right]^2$$

$$Y_d = \frac{Y_{ds} * V_{ds} * (t_d + 460) * P_b}{V_d * (t_{ds} + 460) * (P_b + \Delta H/13.6)}$$

CALIBRATION BY: J. McDonald

METER BOX NUMBER: N-8

DATE: 2-26-86

BAROMETRIC PRESSURE (P_B): 29.32 IN. HG

*DATE: _____

*BAROMETRIC PRESSURE (P_B): _____ IN. HG

STANDARD METER NUMBER: 1017057

COEFFICIENT (Y_{DS}): 0.9750

NOMINAL FLOW RATE ($\tilde{Q}$) CFM	STANDARD DRY GAS METER			METER BOX METERING SYSTEM		
	GAS VOLUME (V_{DS}) FT^3	TEMP. (T_{DS}) °F	TIME (θ) MIN.	ORIFICE SETTING (ΔH) IN. H_2O	GAS VOLUME (V_D) FT^3	TEMP. (T_D) °F
	4.325	69	10:00	0.50	4.243	76
	4.310	69	10:00	0.50	4.236	77
	8.744	69	10:00	2.10	8.590	80
	8.739	69	10:00	2.10	8.612	84
	13.007	69	10:00	4.80	12.840	87
	12.977	69	10:00	4.80	12.864	90

NOMINAL FLOW RATE ($\tilde{Q}$) CFM	METER BOX METERING SYSTEM			
	FLOW RATE (Q_D) CFM	ORIFICE FACTOR (OF)	COEFF. (Y_D)	$\Delta H@$ IN. H_2O
			1.0088	1.577
			1.0089	1.586
			1.0128	1.606
			1.0152	1.599
			1.0122	1.641
			1.0136	1.639
	AVERAGE		1.0119	1.608

$$\Delta H_@ = \frac{0.0317 * \Delta H}{P_b * (t_d + 460)} * \left[\frac{(t_{ds} + 460) * \theta}{Y_{ds} * V_{ds}}\right]^2$$

$$Y_d = \frac{Y_{ds} * V_{ds} * (t_d + 460) * P_b}{V_d * (t_{ds} + 460) * (P_b + \Delta H/13.6)}$$

CALIBRATION BY: T. McDonald

METER BOX NUMBER: N9

DATE: 12-5-85

BAROMETRIC PRESSURE (P_B): 29.8 IN. HG

*DATE: _____

*BAROMETRIC PRESSURE (P_B): _____ IN. HG

STANDARD METER NUMBER: 1017057

COEFFICIENT (Y_{DS}): .9942

NOMINAL FLOW RATE ($\tilde{Q}$) CFM	STANDARD DRY GAS METER			METER BOX METERING SYSTEM		
	GAS VOLUME (V_{DS}) FT^3	TEMP. (T_{DS}) °F	TIME (θ) MIN.	ORIFICE SETTING (ΔH) IN. H_2O	GAS VOLUME (V_D) FT^3	TEMP. (T_D) °F
0.4	4.133	68	10:00	0.50	4.172	82
	4.120	68	10:00	0.50	4.162	84
0.8	8.285	68	10:00	2.00	8.432	85
	8.273	68	10:00	2.00	8.480	87
1.2	12.965	68	10:00	4.80	13.350	90
	12.956	68	10:00	4.80	13.383	91

NOMINAL FLOW RATE ($\tilde{Q}$) CFM	METER BOX METERING SYSTEM			
	FLOW RATE (Q_D) CFM	ORIFICE FACTOR (OF)	COEFF. (Y_D)	$\Delta H@$ IN. H_2O
0.4	0.4091	3.016	1.0098	1.620
	0.4078	3.021	1.0127	1.625
0.8	0.8201	6.048	1.0034	1.604
	0.8189	6.059	0.9999	1.603
1.2	1.2833	9.412	0.9940	1.558
	1.2824	9.421	0.9926	1.557
	AVERAGE		1.0021	1.595

$$\Delta H_@ = \frac{0.0317 * \Delta H}{P_b * (t_d + 460)} * \left[\frac{(t_{ds} + 460) * \theta}{Y_{ds} * V_{ds}}\right]^2$$

$$Y_d = \frac{Y_{ds} * V_{ds} * (t_d + 460) * P_b}{V_d * (t_{ds} + 460) * (P_b + \Delta H/13.6)}$$

CALIBRATION BY: FREDDY JONES

METER BOX NUMBER: N-10

DATE: 12/27/85

BAROMETRIC PRESSURE (P_B): 29.80 IN. HG

*DATE: _____

*BAROMETRIC PRESSURE (P_B): _____ IN. HG

STANDARD METER NUMBER: 1017057

COEFFICIENT (Y_{DS}): 0.9942

NOMINAL FLOW RATE ($\tilde{Q}$) CFM	STANDARD DRY GAS METER			METER BOX METERING SYSTEM		
	GAS VOLUME (V_{DS}) FT^3	TEMP. (T_{DS}) °F	TIME (θ) MIN.	ORIFICE SETTING (ΔH) IN. H_2O	GAS VOLUME (V_D) FT^3	TEMP. (T_D) °F
	4.321	64	10.0	0.5	4.127	45
	4.129	64	10.0	0.5	4.160	70
	8.448	64	10.0	2.1	8.411	68
	8.412	64	10.0	2.1	8.429	70
	12.977	64	10.0	4.8	12.501	57
	12.915	64	10.0	4.8	12.621	65

NOMINAL FLOW RATE ($\tilde{Q}$) CFM	METER BOX METERING SYSTEM			
	FLOW RATE (Q_D) CFM	ORIFICE FACTOR (OF)	COEFF. (Y_D)	ΔH@ IN. H_2O
	0.43	2.9	1.0020	1.567
	0.41	3.0	0.9969	1.635
	0.84	6.1	1.0010	1.647
	0.84	6.1	0.9984	1.655
	1.29	9.1	1.0064	1.629
	1.29	9.2	1.0074	1.620
	AVERAGE		1.002	1.63

$$\Delta H_@ = \frac{0.0317 * \Delta H}{P_b * (t_d + 460)} * \left[\frac{(t_{ds} + 460) * \theta}{Y_{ds} * V_{ds}}\right]^2$$

$$Y_d = \frac{Y_{ds} * V_{ds} * (t_d + 460) * P_b}{V_d * (t_{ds} + 460) * (P_b + \Delta H/13.6)}$$

CALIBRATION BY: T. McDonald

METER BOX NUMBER: N-11

DATE: 2-18-86

BAROMETRIC PRESSURE (P_B): 29.3 IN. HG

*DATE: _____

*BAROMETRIC PRESSURE (P_B): _____ IN. HG

STANDARD METER NUMBER: 1017057

COEFFICIENT (Y_{DS}): ~~0.9870~~ 0.9780 RAE

NOMINAL FLOW RATE ($\tilde{Q}$) CFM	STANDARD DRY GAS METER			METER BOX METERING SYSTEM		
	GAS VOLUME (V_{DS}) FT^3	TEMP. (T_{DS}) °F	TIME (θ) MIN.	ORIFICE SETTING (ΔH) IN. H_2O	GAS VOLUME (V_D) FT^3	TEMP. (T_D) °F
0.4	4.137	69	10:00	0.50	4.204	79
	4.128	69	10:00	0.50	4.197	79
0.8	8.253	69	10:00	2.10	8.266	81
	8.238	69	10:00	2.10	8.288	83
1.2	12.618	69	10:00	4.80	12.496	86
	12.596	69	10:00	4.80	12.528	88

NOMINAL FLOW RATE ($\tilde{Q}$) CFM	METER BOX METERING SYSTEM			
	FLOW RATE (Q_D) CFM	ORIFICE FACTOR (OF)	COEFF. (Y_D)	ΔH @ IN. H_2O
0.4			0.9794	1.716
			0.9789	1.723
0.8			0.9934	1.804
			0.9926	1.804
1.2			1.0072	1.748
			1.0065	1.748
	AVERAGE		0.993	1.76

$$\Delta H_@ = \frac{0.0317 * \Delta H}{P_b * (t_d + 460)} * \left[\frac{(t_{ds} + 460) * \theta}{Y_{ds} * V_{ds}}\right]^2$$

$$Y_d = \frac{Y_{ds} * V_{ds} * (t_d + 460) * P_b}{V_d * (t_{ds} + 460) * (P_b + \Delta H/13.6)}$$

CALIBRATION BY: MK

METER BOX NUMBER: RAC 2

DATE: 3-12-86

BAROMETRIC PRESSURE (P_B): 29.72 IN. HG

*DATE: _____

*BAROMETRIC PRESSURE (P_B): _____ IN. HG

STANDARD METER NUMBER: 1017057

COEFFICIENT (Y_{DS}): .9780

NOMINAL FLOW RATE ($\tilde{Q}$) CFM	STANDARD DRY GAS METER			METER BOX METERING SYSTEM		
	GAS VOLUME (V_{DS}) FT^3	TEMP. (T_{DS}) °F	TIME (θ) MIN.	ORIFICE SETTING (ΔH) IN. H_2O	GAS VOLUME (V_D) FT^3	TEMP. (T_D) °F
	4.109	68	10:00	0.50	4.176	88
	4.110	68	10:00	.5	4.226	90
	8.027	69	10:00	2.10	8.346	103
	8.042	69	10:00	2.1	8.382	103
	12.427	68	10:00	4.80	12.361	87
	12.285	69	10:00	4.8	12.545	101

NOMINAL FLOW RATE ($\tilde{Q}$) CFM	METER BOX METERING SYSTEM			
	FLOW RATE (Q_D) CFM	ORIFICE FACTOR (OF)	COEFF. (Y_D)	$\Delta H@$ IN. H_2O
			0.9975	1.680
			0.9786	1.673
			0.9959	1.807
			0.9935	1.800
			1.0066	1.767
			1.0037	1.769
	AVERAGE		0.9960	1.749

$$\Delta H_@ = \frac{0.0317 * \Delta H}{P_b * (t_d + 460)} * \left[\frac{(t_{ds} + 460) * \theta}{Y_{ds} * V_{ds}}\right]^2$$

$$Y_d = \frac{Y_{ds} * V_{ds} * (t_d + 460) * P_b}{V_d * (t_{ds} + 460) * (P_b + \Delta H/13.6)}$$

NOZZLE NUMBER: 101

Date	Initials	Dia. 1	Dia. 2	Dia. 3	Dia. 4	Dia. 5	Average
11-30-82	TWA	.172	.174	.171	.171	.172	0.172"
08-31-83	ST	.171	.170	.173	.170	.172	0.171"
3-8-84	JNC	.173	.172	.171	.174	.174	0.173"
3/19/84	TT	.173	.174	.174	.173	.172	0.173"
7-5-84	TTM	.174	.173	.175	.176	.174	0.174"
3-26-85	MRH	.169	.172	.171	.168	.170	0.170"
10.23.85	GMC	.174	.175	.173	.177	.176	0.175
2-13-86	JDE	.175	.179	.176	.177	.178	0.177

NOZZLE NUMBER: 103

Date	Initials	Dia. 1	Dia. 2	Dia. 3	Dia. 4	Dia. 5	Average
11-30-82	TWA	.174	.174	.173	.172	.174	0.173"
8-31-83	ST	.172	.170	.173	.172	.172	0.172"
3-8-84	JNC	.172	.175	.174	.172	.172	0.173"
3/20/84	VSGH	.173	.173	.173	.172	.173	0.173"
7-5-84	TTM	.177	.174	.177	.175	.175	0.176"
3-25-85	MRH	.169	.169	.170	.171	.171	0.170"
10.23.85	GMC	.176	.175	.173	.176	.177	0.175
2-13-86	JDE	.179	.178	.175	.176	.175	0.177

NOZZLE NUMBER: 104

Date	Initials	Dia. 1	Dia. 2	Dia. 3	Dia. 4	Dia. 5	Average
11-30-82	TWA	.243	.240	.241	.241	.242	0.241"
2-2-83	PLO	.244	.245	.246	.246	.244	0.245"
8-31-83	ST	.243	.244	.243	.243	.244	0.243"
3-8-84	JNC	.244	.245	.244	.245	.246	0.245"
7-5-84	TTM	.244	.244	.241	.245	.245	0.244"
3-25-85	JDE	.256	.257	.258	.254	.254	0.256"
7-30-85	JFJ	.249	.248	.248	.247	.249	0.248
10.23.85	GMC	.252	.252	.254	.252	.253	0.253
2-13-86	JDE	.259	.258	.258	.255	.256	0.257

NOZZLE NUMBER: 106

Date	Initials	Dia. 1	Dia. 2	Dia. 3	Dia. 4	Dia. 5	Average
11-30-82	TWA	.249	.248	.247	.246	.249	0.248"
2-2-83	PLO	.249	.251	.250	.252	.252	0.251"
8-31-83	ST	.248	.246	.246	.247	.245	0.246"
3-8-84	JNC	.248	.251	.250	.249	.250	0.250"
7-5-84	TTM	.249	.252	.250	.249	.249	0.250"
3-25-85	JAE	.250	.249	.248	.249	.247	0.249"
7-30-85	JFJ	.245	.246	.246	.247	.245	0.246"
10.23.85	GLC	.248	.251	.249	.250	.251	0.250
2-13-86	JDE	.250	.252	.249	.250	.251	0.250

NOZZLE NUMBER: 108

Date	Initials	Dia. 1	Dia. 2	Dia. 3	Dia. 4	Dia. 5	Average
11-30-82	TWA	.306	.303	.305	.306	.306	0.305"
8-31-83	ST	.305	.308	.310	.309	.305	0.307"
3-8-84	JNC	.304	.304	.306	.304	.305	0.305"
2-5-84	TTM	.307	.305	.306	.306	.306	0.306
3-25-85	JDE	.299	.298	.296	.296	.299	0.298"
10.23.85	GMC	.296	.300	.297	.299	.298	0.298
2-13-86	JDE	.301	.300	.302	.301	.303	0.301

ENTROPY ENVIRONMENTALISTS, INC.

NOZZLE NUMBER: 502

Date	Initials	Dia. 1	Dia. 2	Dia. 3	Dia. 4	Dia. 5	Average
12-2-82	ST	.152	.151	.150	.152	.150	0.151
3-12-84	MAH	.154	.150	.154	.151	.152	0.152
3-25-85	JDE	.153	.152	.154	.152	.153	0.153
2-19-86	JE	.154	.155	.157	.155	.153	0.155

NOTE: All diameters measured in inches.

ENTROPY ENVIRONMENTALISTS, INC.

NOZZLE NUMBER: 507

Date	Initials	Dia. 1	Dia. 2	Dia. 3	Dia. 4	Dia. 5	Average
12-2-82	ST	.301	.302	.303	.304	.302	0.302
3-12-84	MAH	.300	.304	.304	.302	.301	0.302
2-15-85	MH	.299	.300	.297	.301	.297	0.299
3-25-85	JDE	.301	.302	.300	.303	.303	0.302"
2-19-86	JE	.305	.303	.302	.304	.305	0.304

NOTE: All diameters measured in inches.

NOZZLE NUMBER: 508

Date	Initials	Dia. 1	Dia. 2	Dia. 3	Dia. 4	Dia. 5	Average
12-2-82	ST	.306	.303	.305	.304	.306	0.305
11-14-83	PLO	.309	.309	.312	.310	.312	0.310
2-3-84	PLO	.310	.310	.311	.308	.309	0.310
3-12-84	MAH	.314	.316	.315	.312	.312	.314
2-19-86	JE	.313	.315	.314	.313	.312	0.313

NOTE: All diameters measured in inches.

NOZZLE NUMBER: 509

Date	Initials	Dia. 1	Dia. 2	Dia. 3	Dia. 4	Dia. 5	Average
12-2-82	ST	.310	.308	.308	.311	.309	0.309
3-12-84	MAH	.306	.309	.309	.310	.308	0.308
3-25-85	TDE	.304	.308	.304	.305	.307	0.306"
2-19-86	JE	.313	.311	.312	.311	.314	0.312

NOTE: All diameters measured in inches.

NOZZLE NUMBER: 702

Date	Initials	Dia. 1	Dia. 2	Dia. 3	Dia. 4	Dia. 5	Average
12-2-87	ST	.182	.183	.181	.182	.183	0.182"
4-7-83	PLO	.187	.184	.185	.186	.186	0.186"
11-18-83	PLO	.187	.187	.187	.186	.187	0.187"
3-8-84	JNC	.184	.187	.186	.186	.184	0.186"
7-6-84	TTM	.186	.187	.186	.186	.185	0.186
10-23-84	ATM	.183	.181	.182	.181	.183	0.182
10.24.85	GC	.185	.184	.186	.183	.184	0.184
2-13-86	T.McD.	.180	.178	.180	.179	.178	0.179

NOTE: All diameters measured in inches.

NOZZLE NUMBER: 703

Date	Initials	Dia. 1	Dia. 2	Dia. 3	Dia. 4	Dia. 5	Average
12-2-82	ST	.181	.181	.181	.183	.179	0.181"
4-7-83	PLO	.182	.184	.182	.182	.181	0.182"
9-6-83	PLO	.178	.180	.178	.179	.179	0.179"
11-18-83	PLO	.182	.181	.179	.181	.181	0.181"
3-8-84	JNC	.181	.180	.181	.182	.180	0.181"
7-6-84	TTM	.181	.179	.177	.181	.181	0.180
10-23-84	ATM	.174	.176	.173	.173	.174	0.174
10-24-85	GC	.176	.177	.174	.177	.176	0.176
2-13-86	T. McD.	.167	.171	.171	.168	.168	0.169

NOTE: All diameters measured in inches.

NOZZLE NUMBER: 4-6

Date	Initials	Dia. 1	Dia. 2	Dia. 3	Dia. 4	Dia. 5	Average
2-7-84	ST	.121	.122	.122	.124	.122	0.122
6/26/85	TW	.125	.125	.126	.127	.125	0.126

NOTE: All diameters measured in inches.

NOZZLE NUMBER: 5-5

Date	Initials	Dia. 1	Dia. 2	Dia. 3	Dia. 4	Dia. 5	Average
2-7-84	ST	.184	.184	.184	.184	.185	0.184
3-6-84	BDR	.185	.185	.184	.184	.184	0.184
6/20/85	TW	.190	.192	.191	.191	.192	.190

NOTE: All diameters measured in inches.

THERMO COUPLES

TEMPERATURE SENSING EQUIPMENT CALIBRATION DATA

ROMETRIC PRESSURE: 29.50 DATE: 2-20-86 CALIBRATED BY: TT

MERCURY-IN-GLASS REFERENCE NUMBER: 196/851 AMBIENT TEMP.: 66

B S

CALIBRATION SYSTEM USED	POTENTIOMETER I.D. NUMBER	THERMOCOUPLE/ THERMOMETER I.D. NUMBER	REFERENCE THERMOMETER TEMPERATURE T_o (°F)	T_c (°F)	MEAN TEMPERATURE OF Hg COLUMN T_m (°F)	THERMOCOUPLE/ THERMOMETER TEMPERATURE T_t (°F)	ΔT [redacted].5%
Hot Oil	005	6-2	400	410	120	400	1.15 %
	005	6-2	400	410	122	401	1.[redacted]%
	005	6-2	400	410	112	401	1.[redacted]%
	013	7-2	400	410	120	396	1.61 %
	013	7-2	400	410	120	396	1.[redacted]%
	013	7-2	400	410	112	396	1.[redacted]%
	005	5-11	400	410	116	401	1.03%
	005	5-11	400	410	122	400	1.1[redacted]%
	005	5-11	400	409	126	400	1.0[redacted]%
	013	6-3	400	410	116	396	1.61 %
	013	6-3	400	410	122	394	1.8[redacted]%
	013	6-3	400	409	126	393	1.8[redacted]%
	005	6-1	400	410	116	396	1.61 %
	005	6-1	400	410	122	398	1.3[redacted]%
	005	6-1	400	410	112	399	1.[redacted]%
	013	7-1	400	410	116	396	1.61 %
	013	7-1	400	410	122	398	1.2[redacted]%
	013	7-1	400	410	112	399	1.2[redacted]%
	005	6-0	400	410	118	401	1.03%
	005	6-0	400	410	112	401	1.0[redacted]%
	005	6-0	400	410	120	401	1.0[redacted]%
	013	5-7	400	410	118	395	1.72 %
	013	5-7	400	410	112	395	1.7[redacted]%
	013	5-7	400	410	120	395	1.7[redacted]%
	005	4-10	400	410	114	399	1.26%
	005	4-10	400	410	114	402	.9[redacted]%
	005	4-10	400	410	108	403	.8[redacted]%
	013	4-5	400	410	114	398	1.38%
	013	4-5	400	410	114	400	1.[redacted]%
	013	4-5	400	410	108	402	.[redacted]%

CORRECTED TEMPERATURE = $T_c = T_o + .00009\ (T_o - 20)(T_o - T_m)$

TEMPERATURE DIFFERENCE = $\Delta T = \dfrac{[(T_c, {}^oF + 460) - (T_t, {}^oF + 460)]}{T_c, {}^oF + 460} \times 100 \leq 1.5\%$

ENTROPY

TEMPERATURE SENSING EQUIPMENT CALIBRATION DATA

ROMETRIC PRESSURE: 29.50 DATE: 2-26-86 CALIBRATED BY: HT

ERCURY-IN-GLASS REFERENCE NUMBER: 2012456 AMBIENT TEMP.: 66

CALIBRATION SYSTEM USED	POTENTIOMETER I.D. NUMBER	THERMOCOUPLE/ THERMOMETER I.D. NUMBER	REFERENCE THERMOMETER TEMPERATURE T_o (°F)	B T_c (°F)	MEAN TEMPERATURE OF Hg COLUMN T_m (°F)	THERMOCOUPLE/ THERMOMETER TEMPERATURE T_t (°F)	S ΔT^B ≤1.5%
Boiling Water	005	6-2	210	212	110	211	.15%
	005	6-2	210	212	112	213	.15%
	005	6-2	210	212	110	213	.15%
	013	7-2	210	212	110	209	.45%
	013	7-2	210	212	112	210	.3%
	013	7-2	210	212	110	210	.3%
	005	6-3	210	212	120	212	0
	005	6-3	210	212	110	212	0
	005	6-3	210	212	110	212	0
	013	5-11	210	212	120	211	.15%
	013	5-11	210	212	110	211	.15%
	013	5-11	210	212	110	211	.15%
	005	6-1	210	212	110	211	.15%
	005	6-1	210	212	120	212	0
	005	6-1	210	212	114	212	0
	013	7-1	210	212	110	210	.3%
	013	7-1	210	212	120	210	.3%
	013	7-1	210	212	114	210	.3%
	005	5-7	210	212	110	212	0
	005	5-7	210	212	116	212	0
	005	5-7	210	212	116	212	0
	013	6-0	210	212	110	211	.15%
	013	6-0	210	212	110	212	0
	013	6-0	210	212	116	212	0
	005	4-10	210	212	110	213	.15%
	005	4-10	210	212	114	213	.15%
	005	4-10	210	212	110	213	.15%
	013	4-5	210	212	116	211	.15%
	013	4-5	210	212	114	211	.15%
	013	4-5	210	212	110	211	.15%

CORRECTED TEMPERATURE = $T_c = T_o + .00009\ (T_o - 20)(T_o - T_m)$

TEMPERATURE DIFFERENCE = $\Delta T = \dfrac{[(T_c, {}^oF + 460) - (T_t, {}^oF + 460)]}{T_c, {}^oF + 460} \times 100 \leq 1.5\%$

ENTROPY

TEMPERATURE SENSING EQUIPMENT CALIBRATION DATA

OMETRIC PRESSURE: 29.50 DATE: 2-21-86 CALIBRATED BY: TT

ERCURY-IN-GLASS REFERENCE NUMBER: 196185' AMBIENT TEMP.: 66

B S

CALIBRATION SYSTEM USED	POTENTIOMETER I.D. NUMBER	THERMOCOUPLE/ THERMOMETER I.D. NUMBER	REFERENCE THERMOMETER TEMPERATURE T_o (°F)	T_c (°F)	MEAN TEMPERATURE OF Hg COLUMN T_m (°F)	THERMOCOUPLE/ THERMOMETER TEMPERATURE T_t (°F)	ΔT ≤1.5%
ICE BATH	005	7-2	34	34	66	31	.61 %
	005	7-2	34	34	66	31	.61 %
	005	7-2	34	34	66	31	.61 %
	013	5-11	34	34	66	31	.61 %
	013	5-11	34	34	66	31	.61 %
	013	5-11	34	34	66	31	.61 %
	005	6-3	34	34	66	31	.61 %
	005	6-3	34	34	66	31	.61 %
	005	6-3	34	34	66	31	.61 %
	013	6-1	34	34	66	31	.61 %
	013	6-1	34	34	66	31	.61 %
	013	6-1	34	34	66	31	.61 %
	005	6-0	34	34	66	31	.61 %
	005	6-0	34	34	66	31	.61 %
	005	6-0	34	34	66	31	.61 %
	013	5-7	34	34	66	31	.61 %
	013	5-7	34	34	66	31	.61 %
	013	5-7	34	34	66	31	.61 %
	005	4-5	34	34	66	31	.61 %
	005	4-5	34	34	66	31	.61 %
	005	4-5	34	34	66	31	.61 %
	013	6-2	34	34	66	31	.61 %
	013	6-2	34	34	66	31	.61 %
	013	6-2	34	34	66	31	.61 %
	005	4-10	34	34	66	31	.61 %
	005	4-10	34	34	66	31	.61 %
	005	4-10	34	34	66	31	.61 %
	013	7-1	34	34	66	31	.61 %
	013	7-1	34	34	66	31	.61 %
	013	7-1	34	34	66	31	.61 %

CORRECTED TEMPERATURE = $T_c = T_o + .00009\ (T_o - 20)(T_o - T_m)$

TEMPERATURE DIFFERENCE = $\Delta T = \dfrac{[(T_c, {}^oF + 460) - (T_t, {}^oF + 460)]}{T_c, {}^oF + 460} \times 100 \leq 1.5\%$

TEMPERATURE SENSING EQUIPMENT CALIBRATION DATA

BAROMETRIC PRESSURE: 29.48 DATE: 2-21-86 CALIBRATED BY: TI

MERCURY-IN-GLASS REFERENCE NUMBER: 1961851 AMBIENT TEMP.: 66

CALIBRATION SYSTEM USED	POTENTIOMETER I.D. NUMBER	THERMOCOUPLE/ THERMOMETER I.D. NUMBER	REFERENCE THERMOMETER TEMPERATURE T_o (°F) B	T_c (°F) S	MEAN TEMPERATURE OF Hg COLUMN T_m (°F)	THERMOCOUPLE/ THERMOMETER TEMPERATURE T_t (°F)	ΔT^B ≤1.5%
Ice Bath	005	6-6	34	34	66	31	.61 %
	005	6-6	34	34	66	31	.61 %
	005	6-6	34	34	66	31	.61 %
	013	4-5	34	34	66	31	.61 %
	013	4-5	34	34	66	31	.61 %
	013	4-5	34	34	66	31	.61 %
	005	4-1	34	34	66	31	.61 %
	005	4-1	34	34	66	31	.61 %
	005	4-1	34	34	66	31	.61 %
	013	4-4	34	34	66	31	.61 %
	013	4-4	34	34	66	31	.61 %
	013	4-4	34	34	66	31	.61 %
	005	4-2	34	34	66	31	.61 %
	005	4-2	34	34	66	32	.4 %
	005	4-2	34	34	66	32	.4 %
	013	4-3	34	34	66	31	.61 %
	013	4-3	34	34	66	31	.61 %
	013	4-3	34	34	66	31	.61 %
	013	8-2	34	34	66	31	.61 %
	013	8-2	34	34	66	31	.61 %
	013	8-2	34	34	66	31	.61 %
	005	6-5	34	34	66	31	.61 %
	005	6-5	34	34	66	32	.4 %
	005	6-5	34	34	66	32	.4 %
	~~013~~	~~7-7~~	~~34~~		~~66~~		
	~~013~~ BROKEN	~~7-7~~	~~34~~		~~66~~		
	~~013~~	~~7-7~~	~~34~~		~~66~~		
	005	7...7	34	34	66	31	.61 %
	005	7...7	34	34	66	32	.4 %
	005	7...7	34	34	66	32	.4 %

CORRECTED TEMPERATURE = $T_c = T_o + .00009\ (T_o-20)(T_o-T_m)$

TEMPERATURE DIFFERENCE = $\Delta T = \dfrac{[(T_c, {}^oF + 460) - (T_t, {}^oF + 460)]}{T_c, {}^oF + 460} \times 100 \leq 1.5\%$

ENTROPY

TEMPERATURE SENSING EQUIPMENT CALIBRATION DATA

BAROMETRIC PRESSURE: 29.48 DATE: 2-21-86 CALIBRATED BY: MH

MERCURY-IN-GLASS REFERENCE NUMBER: 1961851 AMBIENT TEMP.: 66-67

CALIBRATION SYSTEM USED	POTENTIOMETER I.D. NUMBER	THERMOCOUPLE/ THERMOMETER I.D. NUMBER	REFERENCE THERMOMETER TEMPERATURE T_o (°F)	T_c (°F)	MEAN TEMPERATURE OF Hg COLUMN T_m (°F)	THERMOCOUPLE/ THERMOMETER TEMPERATURE T_t (°F)	ΔT ≤1.5%
ICE BATH	013	9-4	34	34	67	31	.61 %
	013	9-4	34	34	67	31	.61 %
	013	9-4	34	34	67	31	.61 %
	005	7-6	34	34	67	31	.61 %
	005	7-6	34	34	67	31	.61 %
	005	7-6	34	34	67	31	.61 %
	005	20-5	34	34	67	32	.4
	005	20-5	34	34	67	32	.4
	005	20-5	34	34	67	32	.4 %
	013	1501	34	34	67	31	.61 %
	013	1501	34	34	67	31	.61 %
	013	1501	34	34	67	31	.61 %
	005	9-8	34	34	67	31	.61 %
	005	9-8	34	34	67	31	.61 %
	005	9-8	34	34	67	31	.61 %
	013	20-3	34	34	66	31	.61 %
	013	20-3	34	34	66	31	.61 %
	013	20-3	34	34	66	31	.61 %
	005	20-6	34	34	66	31	.61 %
	005	20-6	34	34	66	32	.4 %
	005	20-6	34	34	66	31	.61 %
	013	16-50	35	35	65	35	0
	013	16-50	35	35	65	35	0
	013	16-50	35	35	65	35	0
	005	6-4	35	35	65	33	.4 %
	005	6-4	35	35	65	33	.4 %
	005	6-4	35	35	65	33	.4 %
	013	15-1	35	35	66	34	.2 %
	013	15-1	35	35	66	34	.2 %
	013	15-1	35	35	66	34	.2 %

CORRECTED TEMPERATURE = $T_c = T_o + .00009\ (T_o - 20)(T_o - T_m)$

TEMPERATURE DIFFERENCE = $\Delta T = \dfrac{[(T_c, {}^oF + 460) - (T_t, {}^oF + 460)]}{T_c, {}^oF + 460} \times 100 \leq 1.5\%$

ENTROPY

TEMPERATURE SENSING EQUIPMENT CALIBRATION DATA

BAROMETRIC PRESSURE: 29.40 DATE: 2-28-86 CALIBRATED BY: TT

MERCURY-IN-GLASS REFERENCE NUMBER: 196185 AMBIENT TEMP.: 67

CALIBRATION SYSTEM USED	POTENTIOMETER I.D. NUMBER	THERMOCOUPLE/ THERMOMETER I.D. NUMBER	REFERENCE THERMOMETER TEMPERATURE T_o (°F)	B T_c (°F)	MEAN TEMPERATURE OF Hg COLUMN T_m (°F)	THERMOCOUPLE/ THERMOMETER TEMPERATURE T_t (°F)	S ΔT^B ≤1.5%
HOT OIL	005	4-4	400	410	122	397	1.49 %
	005	4-4	400	409	126	399	1.15 %
	005	4-4	400	409	126	399	1.15 %
	013	4-5	400	410	122	397	1.49 %
	013	4-5	400	409	126	399	1.15 %
	013	4-5	400	409	126	399	1.15 %
	005	4-3	400	409	130	399	1.15 %
	005	4-3	400	409	130	399	1.15 %
	005	4-3	400	409	130	398	1.27 %
	013	4-1	400	409	130	396	1.5 %
	013	4-1	400	409	130	397	1.38 %
	013	4-1	400	409	130	396	1.5 %
	005	6-6	400	409	130	401	.92 %
	005	6-6	400	409	130	400	1.04 %
	005	6-6	400	409	130	400	1.04 %
	013	4-2	400	409	130	395	1.61 %
	013	4-2	400	409	130	395	1.61 %
	013	4-2	400	409	130	395	1.61 %
	005	6-5	400	409	128	400	1.04 %
	005	6-5	400	409	130	402	.81 %
	005	6-5	400	409	130	401	.92 %
	013	8-2	400	409	128	400	1.04 %
	013	8-2	400	409	130	403	.69 %
	013	8-2	400	409	130	403	.69 %
	005	9-4	400	410	120	399	1.26 %
	005	9-4	400	410	120	399	1.26 %
	005	9-4	400	409	126	400	1.04 %
	013	7-7	400	410	120	399	1.26 %
	013	7-7	400	410	120	400	1.15 %
	013	7-7	400	409	126	400	1.04 %

CORRECTED TEMPERATURE = $T_c = T_o + .00009\ (T_o - 20)(T_o - T_m)$

TEMPERATURE DIFFERENCE = $\Delta T = \dfrac{[(T_c, {}^oF + 460) - (T_t, {}^oF + 460)]}{T_c, {}^oF + 460} \times 100 \leq 1.5\%$

ENTROPY

TEMPERATURE SENSING EQUIPMENT CALIBRATION DATA

BAROMETRIC PRESSURE: 29.45 DATE: 2-28-86 CALIBRATED BY: TI

MERCURY-IN-GLASS REFERENCE NUMBER: 1961851 AMBIENT TEMP.: 67

CALIBRATION SYSTEM USED	POTENTIOMETER I.D. NUMBER	THERMOCOUPLE/ THERMOMETER I.D. NUMBER	REFERENCE THERMOMETER TEMPERATURE T_o (°F)	T_c (°F)	MEAN TEMPERATURE OF Hg COLUMN T_m (°F)	THERMOCOUPLE/ THERMOMETER TEMPERATURE T_t (°F)	ΔT ≤1.5%
Hot Oil	005	7-6	400	409	130	402	.81%
	005	7-6	400	409	130	402	.81%
	005	7-6	400	409	128	402	.81%
	013	20-5	400	409	130	402	.81%
	013	20-5	400	409	130	404	.58%
	013	20-5	400	409	128	404	.58%
	005	1601	400	409	130	396	1.5%
	005	1601	400	409	130	396	1.5%
	005	1601	400	409	128	396	1.5%
	013	9-8	400	409	130	397	1.3%
	013	9-8	400	409	130	403	.69%
	013	9-8	400	409	128	404	.58%
	005	20-6	400	409	128	396	1.5%
	005	20-6	400	409	130	397	1.3%
	005	20-6	400	409	128	397	1.38%
	013	20-3	400	409	128	396	1.5%
	013	20-3	400	409	130	404	.58%
	013	20-3	400	409	128	408	.12%
	005	15-1	400	409	130	401	.92%
	005	15-1	400	409	128	401	.92%
	005	15-1	400	409	128	401	.92%
	013	16-50	400	409	130	400	1.04%
	013	16-50	400	409	128	406	.35%
	013	16-50	400	409	128	410	.12%
	005	11-52	400	409	128	400	1.04%
	005	11-52	400	409	128	400	1.04%
	005	11-52	400	409	126	399	1.15%
	013	6-4	400	409	128	405	.46%
	013	6-4	400	409	128	410	.12%
	013	6-4	400	409	126	413	.46%

CORRECTED TEMPERATURE = $T_c = T_o + .00009\ (T_o - 20)(T_o - T_m)$

TEMPERATURE DIFFERENCE = $\Delta T = \dfrac{[(T_c, {}^oF + 460) - (T_t, {}^oF + 460)]}{T_c, {}^oF + 460} \times 100 \leq 1.5\%$

ENTROPY

Potentiometers

TEMPERATURE SENSING EQUIPMENT CALIBRATION DATA

BAROMETRIC PRESSURE: 29.45 DATE: 3-3-86 CALIBRATED BY: TT

MERCURY-IN-GLASS REFERENCE NUMBER: 196/851 AMBIENT TEMP.: 67

CALIBRATION SYSTEM USED	POTENTIOMETER I.D. NUMBER	THERMOCOUPLE/ THERMOMETER I.D. NUMBER	REFERENCE THERMOMETER TEMPERATURE T_o (°F)	T_c (°F)	MEAN TEMPERATURE OF Hg COLUMN T_m (°F)	THERMOCOUPLE/ THERMOMETER TEMPERATURE T_t (°F)	ΔT^B ≤1.5%
Hot Oil	005	15-50	400	409	126	396	1.5 %
	005	15-50	400	409	130	395	1.61 %
	005	15-50	400	409	126	395	1.61 %
	013	5-8	400	409	126	412	.35 %
	013	5-8	400	409	130	415	.69 %
	013	5-8	400	409	126	419	1.15 %
	005	6-1	400	409	128	399	1.15 %
	005	6-1	400	409	130	400	1.04 %
	005	6-1	400	409	130	400	1.04 %
	013	8-50	400	409	128	411	.23 %
	013	8-50	400	409	130	423	1.61 %
	013	8-50	400	409	130	430	1.38 %
	005	9-7	400	410	120	397	1.49 %
	005	9-7	400	410	122	398	1.38 %
	005	9-7	400	409	126	398	1.27 %
	013	30-4	400	410	120	410	0
	013	30-4	400	410	122	415	.57 %
	013	30-4	400	409	126	426	1.96 %
	005	12-5	400	410	120	403	.8 %
	005	12-5	400	409	124	403	.69 %
	005	12-5	400	409	130	~~130~~ 402	.81 %
	013	11-3	400	410	120	425	1.72 %
	013	11-3	400	409	124	425	1.84 %
	013	11-3	400	409	130	425	1.84 %

CORRECTED TEMPERATURE = $T_c = T_o + .00009\ (T_o - 20)(T_o - T_m)$

TEMPERATURE DIFFERENCE = $\Delta T = \dfrac{[(T_c, {}^oF + 460) - (T_t, {}^oF + 460)]}{T_c, {}^oF + 460} \times 100 \leq 1.5\%$

ENTROPY

TEMPERATURE SENSING EQUIPMENT CALIBRATION DATA

BAROMETRIC PRESSURE: 29.19 DATE: 3-14-86 CALIBRATED BY: TT

MERCURY-IN-GLASS REFERENCE NUMBER: 1961851 AMBIENT TEMP.: 70

CALIBRATION SYSTEM USED	POTENTIOMETER I.D. NUMBER	THERMOCOUPLE/ THERMOMETER I.D. NUMBER	REFERENCE THERMOMETER TEMPERATURE T_o (°F)	T_c (°F)	MEAN TEMPERATURE OF Hg COLUMN T_m (°F)	THERMOCOUPLE/ THERMOMETER TEMPERATURE T_t (°F)	ΔT^B $\leq 1.5\%$
Hot Oil	009	4-5	400	410	112	400	1.159
	015	4-5	400	410	114	400	1.15
	023	4-5	400	410	114	398	1.38%

CORRECTED TEMPERATURE = $T_c = T_o + .00009\ (T_o - 20)(T_o - T_m)$

TEMPERATURE DIFFERENCE = $\Delta T = \dfrac{[(T_c, {}^oF + 460) - (T_t, {}^oF + 460)]}{T_c, {}^oF + 460} \times 100 \leq 1.5\%$

TEMPERATURE SENSING EQUIPMENT CALIBRATION DATA

BAROMETRIC PRESSURE: 29.19 DATE: 3-14-86 CALIBRATED BY: TT

MERCURY-IN-GLASS REFERENCE NUMBER: 2012 456 AMBIENT TEMP.: 70

CALIBRATION SYSTEM USED	POTENTIOMETER I.D. NUMBER	THERMOCOUPLE/ THERMOMETER I.D. NUMBER	REFERENCE THERMOMETER TEMPERATURE T_o (°F)	T_c (°F)	MEAN TEMPERATURE OF Hg COLUMN T_m (°F)	THERMOCOUPLE/ THERMOMETER TEMPERATURE T_t (°F)	ΔT^B ≤1.5%
Boiling Water	009	3-0	210	212	110	211	.15%
	015	3-0	210	212	110	209	.45%
	023	3-0	210	212	110	218	.89%

CORRECTED TEMPERATURE = $T_c = T_o + .00009\ (T_o - 20)(T_o - T_m)$

TEMPERATURE DIFFERENCE = $\Delta T = \dfrac{[(T_c, {}^oF + 460) - (T_t, {}^oF + 460)]}{T_c, {}^oF + 460} \times 100 \leq 1.5\%$

ENTROPY

TEMPERATURE SENSING EQUIPMENT CALIBRATION DATA

BAROMETRIC PRESSURE: 29.19 DATE: 3-14-86 CALIBRATED BY: TT

MERCURY-IN-GLASS REFERENCE NUMBER: 1961851 AMBIENT TEMP.: 70

CALIBRATION SYSTEM USED	POTENTIOMETER I.D. NUMBER	THERMOCOUPLE THERMOMETER I.D. NUMBER	REFERENCE THERMOMETER TEMPERATURE T_o (°F)	T_c (°F)	MEAN TEMPERATURE OF Hg COLUMN T_m (°F)	THERMOCOUPLE/ THERMOMETER TEMPERATURE T_t (°F)	ΔT^B $\leq 1.5\%$
ICE BATH	009	4-4	34	34	70	34	0
	015	4-4	34	34	70	32	.4%
	023	4-4	34	34	70	33	.2%

CORRECTED TEMPERATURE = $T_c = T_o + .00009\ (T_o - 20)(T_o - T_m)$

TEMPERATURE DIFFERENCE = $\Delta T = \dfrac{[(T_c, {}^oF + 460) - (T_t, {}^oF + 460)]}{T_c, {}^oF + 460} \times 100 \leq 1.5\%$

ENTROPY

PITOT TUBE INSPECTION DATA SHEET

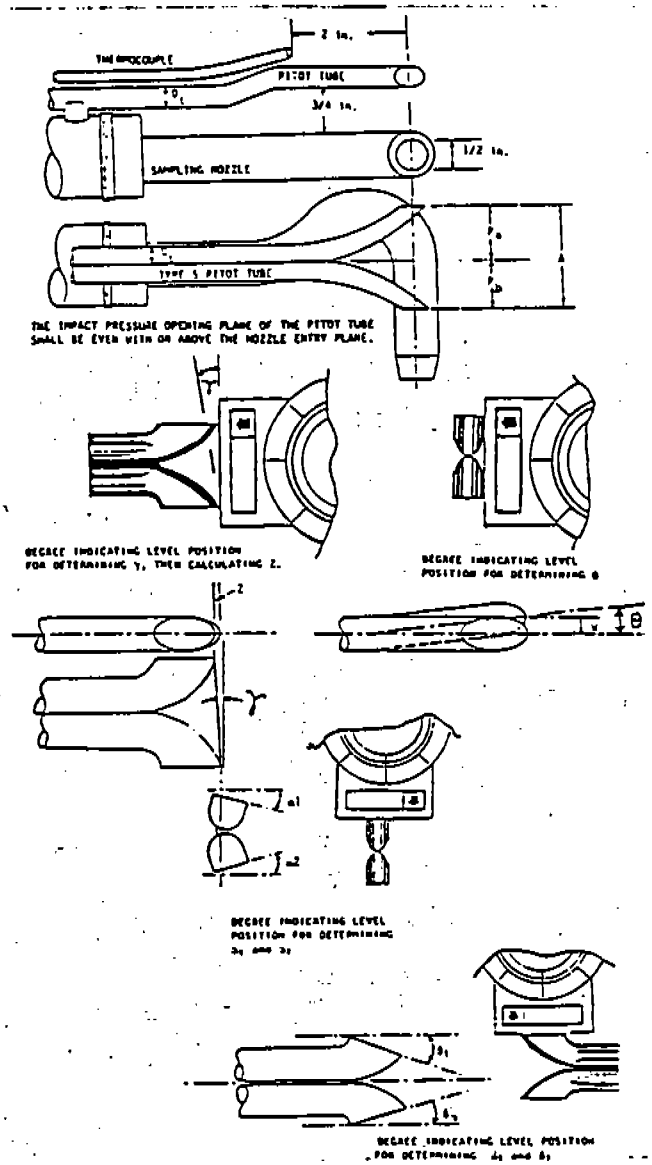

Pre-sample Date 3/20/84		Post Sample Date _____
YES	level?	
NO	obstructions?	
NO	damaged?	
4°	$-10° < \alpha_1 < +10°$	
0°	$-10° < \alpha_2 < +10°$	
0°	$-5° < \beta_1 < +5°$	
0°	$-5° < \beta_2 < +5°$	
0°	γ	
0°	θ	
.864	A	
.428	$1.05\ D_t < P_a < 1.5\ D_t$	
.436	$1.05\ D_t < P_b < 1.5\ D_t$	
.375	$3/16" \leq D_t \leq 3/8"$	
0	$A \tan \gamma < 0.125"$	
0	$A \tan \theta < 0.03125"$	
YES	$P_a = P_b \pm 0.063"$	

Comments: _____

I certify that pitot tube/probe number 2-1 meets or exceeds all specifications, criteria and/or applicable design features* and is hereby assigned a pitot tube calibration factor of 0.84.

Signature Bruce Hawke

Date 3/20/84.

*See 40 CFR 60, Vol. 42, No. 160, Method 2. Verify the minimum 2 inch setback of the thermocouple and the minimum 3/4 inch separation between the pitot tube and the nozzle as shown at the top of this page.

PITOT TUBE INSPECTION DATA SHEET

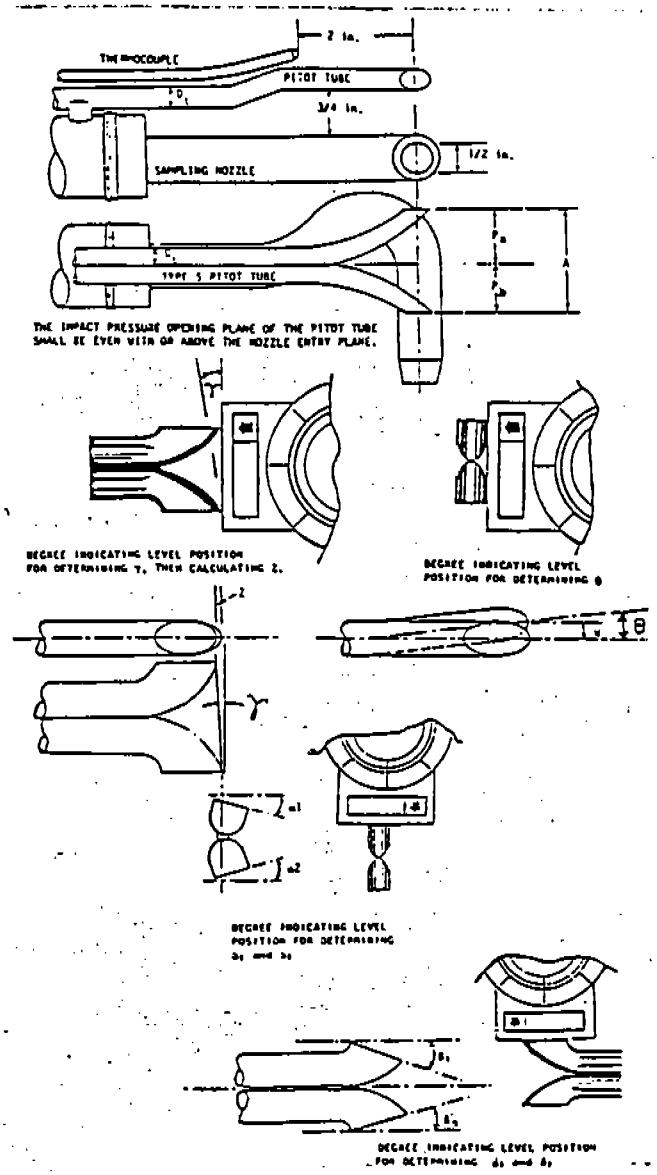

Pre-sample Date 3/20/84		Post Sample Date _____
YES	level?	
No	obstructions?	
NO	damaged?	
0°	$-10° < \alpha_1 < +10°$	
1°	$-10° < \alpha_2 < +10°$	
0°	$-5° < \beta_1 < +5°$	
0°	$-5° < \beta_2 < +5°$	
1°	γ	
0°	θ	
.842	A	
.415	$1.05\ D_t < P_a < 1.5\ D_t$	
.427	$1.05\ D_t < P_b < 1.5\ D_t$	
.375	$3/16" \leq D_t \leq 3/8"$	
.017	$A \tan \gamma < 0.125"$	
0	$A \tan \theta < 0.03125"$	
YES	$P_a = P_b \pm 0.063"$	

Comments: _____

I certify that pitot tube/probe number 2-2 meets or exceeds all specifications, criteria and/or applicable design features* and is hereby assigned a pitot tube calibration factor of 0.84.

Signature Bruce Hawker

Date March 20, 1984

*See 40 CFR 60, Vol. 42, No. 160, Method 2. Verify the minimum 2 inch setback of the thermocouple and the minimum 3/4 inch separation between the pitot tube and the nozzle as shown at the top of this page.

PITOT TUBE INSPECTION DATA SHEET

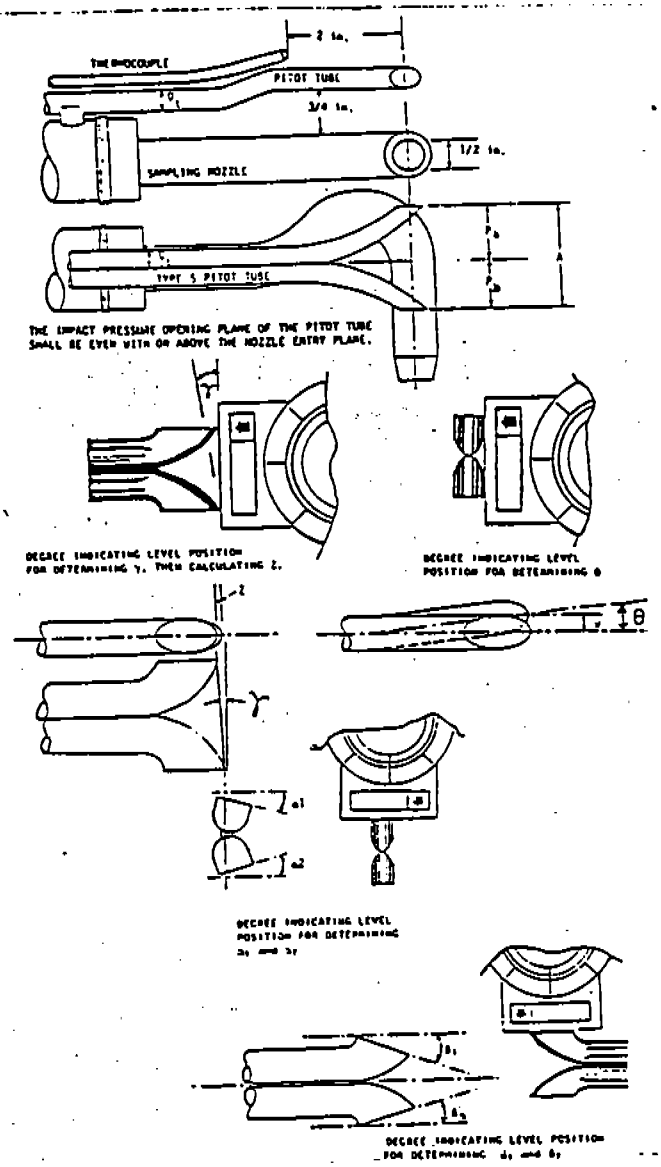

Pre-sample Date 3/19/84		Post Sample Date _____
YES	level?	
NO	obstructions?	
NO	damaged?	
0°	$-10° < \alpha_1 < +10°$	
1°	$-10° < \alpha_2 < +10°$	
0°	$-5° < \beta_1 < +5°$	
0°	$-5° < \beta_2 < +5°$	
0°	γ	
0°	θ	
.749	A	
.359	$1.05\ D_t < P_a < 1.5\ D_t$	
.375	$1.05\ D_t < P_b < 1.5\ D_t$	
0.375	$3/16" \leq D_t \leq 3/8"$	
0	$A \tan \gamma < 0.125"$	
0	$A \tan \theta < 0.03125"$	
YES	$P_a = P_b \pm 0.063"$	

Comments: _____

I certify that pitot tube/probe number 2-3 meets or exceeds all specifications, criteria and/or applicable design features* and is hereby assigned a pitot tube calibration factor of 0.84.

Signature Bruce Hawker

Date March 19, 1984

*See 40 CFR 60, Vol. 42, No. 160, Method 2. Verify the minimum 2 inch setback of the thermocouple and the minimum 3/4 inch separation between the pitot tube and the nozzle as shown at the top of this page.

PITOT TUBE INSPECTION DATA SHEET

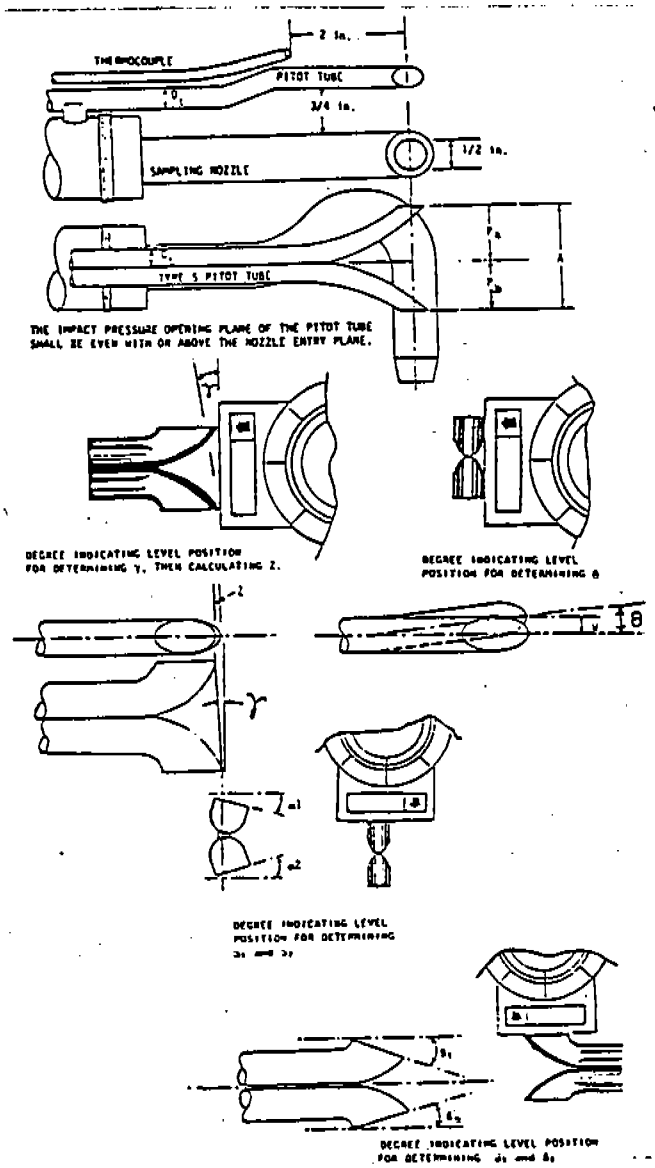

	Pre-sample Date 3/21/84	Post Sample Date _____
YES	level?	
NO	obstructions?	
NO	damaged?	
4°	$-10° < \alpha_1 < +10°$	
2°	$-10° < \alpha_2 < +10°$	
2°	$-5° < \beta_1 < +5°$	
0°	$-5° < \beta_2 < +5°$	
1°	γ	
0°	θ	
.848	A	
.424	$1.05\ D_t < P_a < 1.5\ D_t$	
.424	$1.05\ D_t < P_b < 1.5\ D_t$	
.375	$3/16" \leq D_t \leq 3/8"$	
.015	$A \tan \gamma < 0.125"$	
0	$A \tan \theta < 0.03125"$	
YES	$P_a = P_b \pm 0.063"$	

Comments: _____

I certify that pitot tube/probe number 2-4 meets or exceeds all specifications, criteria and/or applicable design features* and is hereby assigned a pitot tube calibration factor of 0.84.

Signature Bruce Hawke

Date March 21, 1984

*See 40 CFR 60, Vol. 42, No. 160, Method 2. Verify the minimum 2 inch setback of the thermocouple and the minimum 3/4 inch separation between the pitot tube and the nozzle as shown at the top of this page.

PITOT TUBE INSPECTION DATA SHEET

Pre-sample Date 3/20/84

Post Sample Date _____

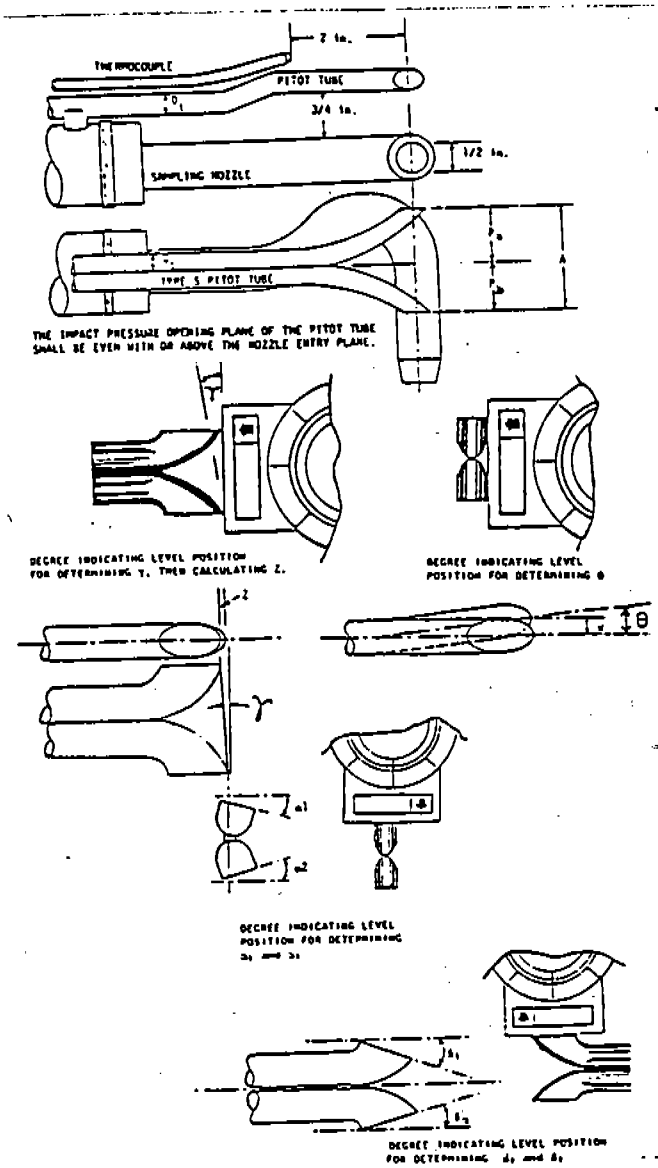

YES	level?	
NO	obstructions?	
NO	damaged?	
1°	$-10° < \alpha_1 < +10°$	
1°	$-10° < \alpha_2 < +10°$	
1°	$-5° < \beta_1 < +5°$	
1°	$-5° < \beta_2 < +5°$	
1°	γ	
0°	θ	
.893	A	
.457	$1.05\ D_t < P_a < 1.5\ D_t$	
.436	$1.05\ D_t < P_b < 1.5\ D_t$	
.375	$3/16" \leq D_t \leq 3/8"$	
0.015	$A \tan \gamma < 0.125"$	
0	$A \tan \theta < 0.03125"$	
YES	$P_a = P_b \pm 0.063"$	

Comments: _____

I certify that pitot tube/probe number 4-1 meets or exceeds all specifications, criteria and/or applicable design features* and is hereby assigned a pitot tube calibration factor of 0.84.

Signature Bruce Hawkins

Date March 29, 1984

*See 40 CFR 60, Vol. 42, No. 160, Method 2. Verify the minimum 2 inch setback of the thermocouple and the minimum 3/4 inch separation between the pitot tube and the nozzle as shown at the top of this page.

PITOT TUBE INSPECTION DATA SHEET

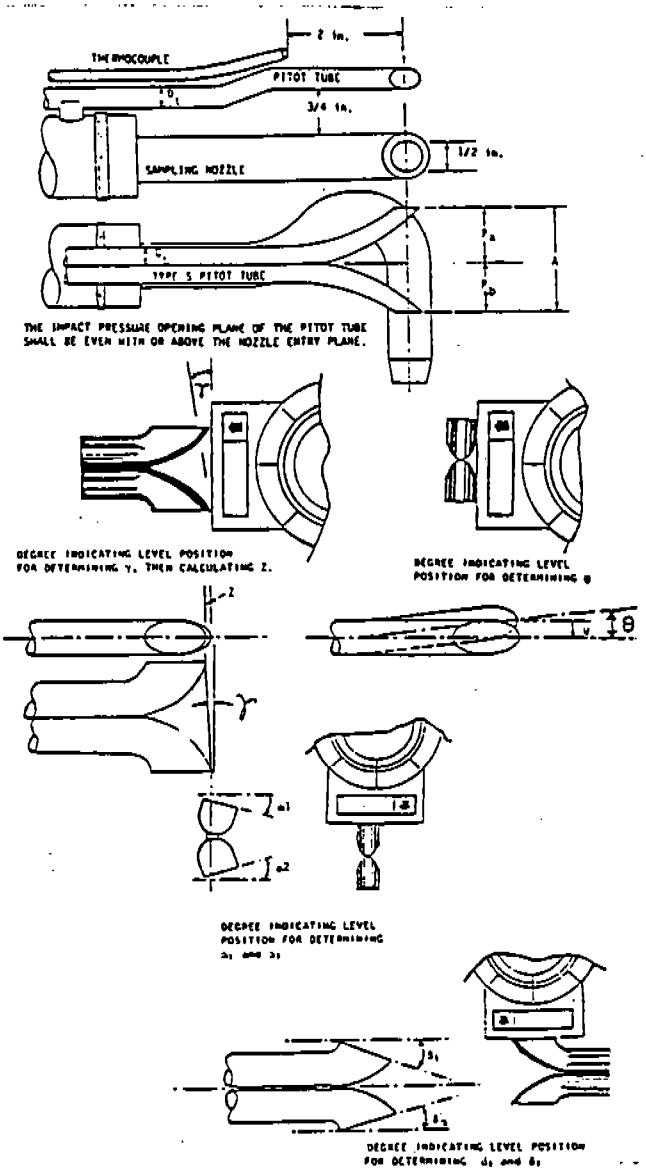

Pre-sample		Post Sample
Date 3/19/84		Date _____
YES	level?	
NO	obstructions?	
NO	damaged?	
0°	$-10° < \alpha_1 < +10°$	
1°	$-10° < \alpha_2 < +10°$	
0°	$-5° < \beta_1 < +5°$	
0°	$-5° < \beta_2 < +5°$	
0°	γ	
0°	θ	
.849	A	
.473	$1.05\ D_t < P_a < 1.5\ D_t$	
.476	$1.05\ D_t < P_b < 1.5\ D_t$	
	$3/16" \leq D_t \leq 3/8"$	
	$A \tan \gamma < 0.125"$	
	$A \tan \theta < 0.03125"$	
	$P_a = P_b \pm 0.063"$	

Comments: _____

I certify that pitot tube/probe number 4-2 meets or exceeds all specifications, criteria and/or applicable design features* and is hereby assigned a pitot tube calibration factor of 0.84.

Signature _____

Date _____

*See 40 CFR 60, Vol. 42, No. 160, Method 2. Verify the minimum 2 inch setback of the thermocouple and the minimum 3/4 inch separation between the pitot tube and the nozzle as shown at the top of this page.

ENTROPY

PITOT TUBE INSPECTION DATA SHEET

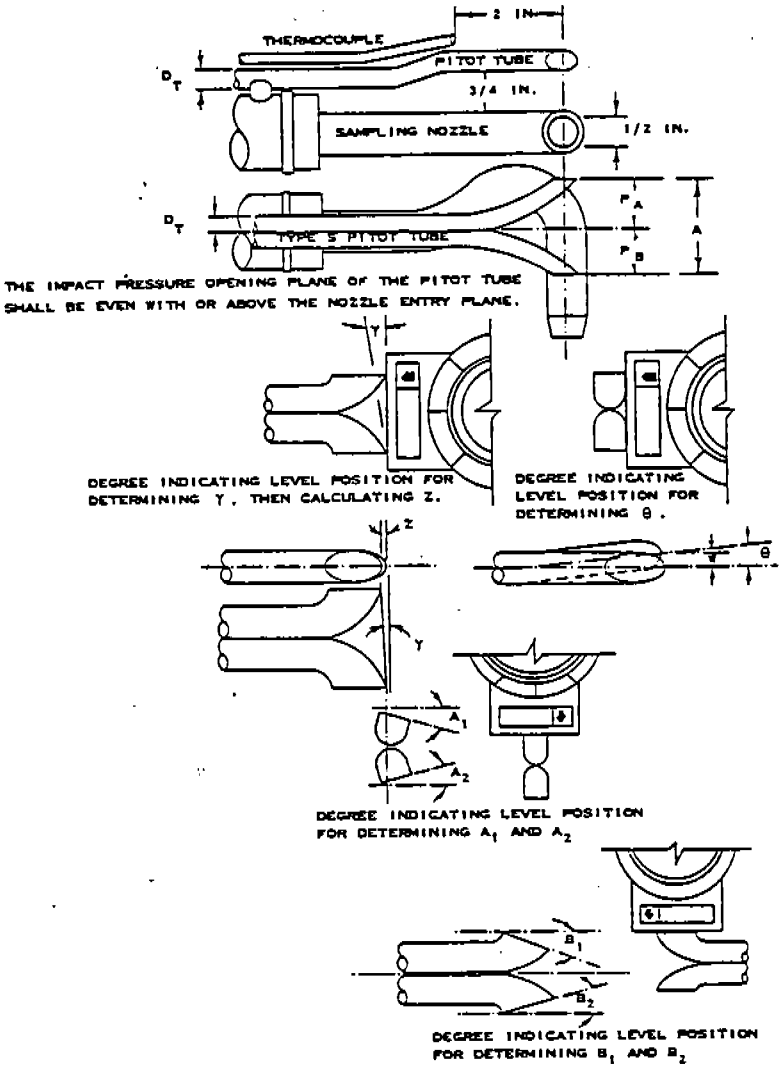

level?	Yes
obstructions?	No
damaged?	No
$-10^\circ < \alpha_1 < +10^\circ$	1°
$-10^\circ < \alpha_2 < +10^\circ$	2°
$-5^\circ < \beta_1 < +5^\circ$	1°
$-5^\circ < \beta_2 < +5^\circ$	1°
γ	1°
θ	1°
A	0.891
$1.05\ D_t < P_a < 1.5\ D_t$	0.446
$1.05\ D_t < P_b < 1.5\ D_t$	0.445
$3/16" < D_t < 3/8"$	0.374
$A \tan \gamma < 0.125"$	0.0155
$A \tan \theta < 0.03125"$	0.0155
$P_a = P_b \pm 0.063"$	Yes

Comments: _____

I certify that pitot tube/probe number 4-3 meets or exceeds all specifications, criteria and/or applicable design features and is hereby assigned a pitot tube calibration factor of 0.84.

Signature Guido J Carrare

Date 1-25-85

*SEE 40 CFR 60, VOL. 42 NO. 160 METHOD 2. VERIFY THE MINIMUM 2 INCH SETBACK OF THE THERMOCOUPLE AND THE MINIMUM 3/4 INCH SEPARATION BETWEEN THE PITOT TUBE AND THE NOZZLE AS SHOWN AT THE TOP OF THIS PAGE.

PITOT TUBE INSPECTION DATA SHEET

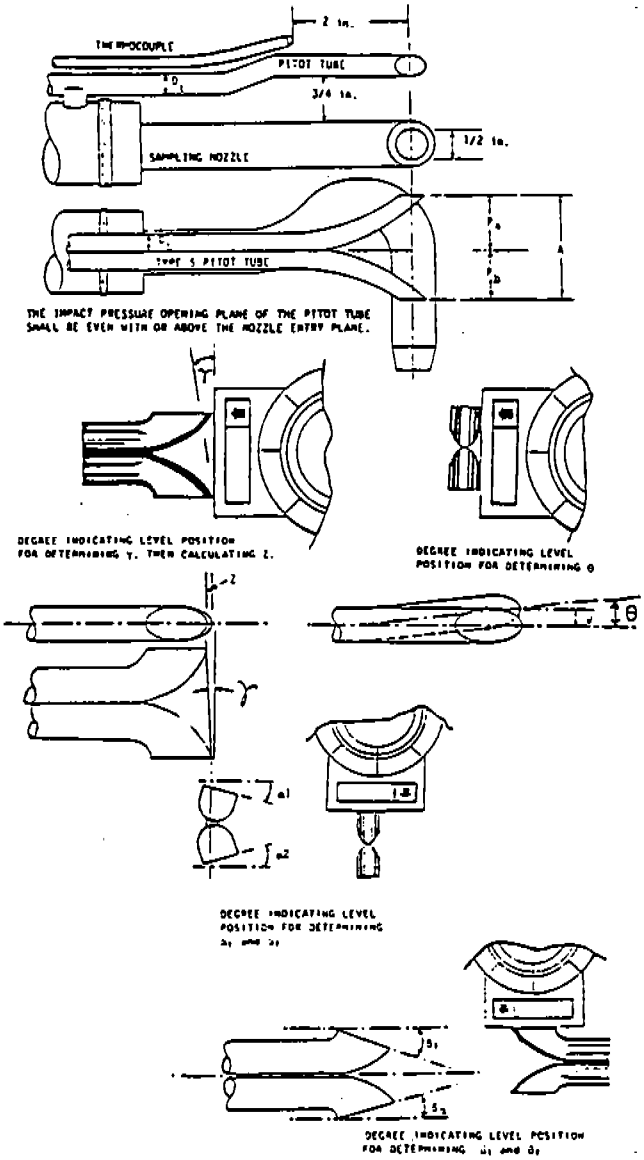

Pre-sample Date 1/19/84		Post Sample Date _____
YES	level?	
No	obstructions?	
No	damaged?	
4°	$-10° < \alpha_1 < +10°$	
5°	$-10° < \alpha_2 < +10°$	
3°	$-5° < \beta_1 < +5°$	
3°	$-5° < \beta_2 < +5°$	
1°	γ	
0	θ	
.778	A	
.398	$1.05\ D_t < P_a < 1.5\ D_t$	
.380	$1.05\ D_t < P_b < 1.5\ D_t$	
.375	$3/16" \leq D_t \leq 3/8"$	
.014	$A \tan \gamma < 0.125"$	
0	$A \tan \theta < 0.03125"$	
YES	$P_a = P_b \pm 0.063"$	

Comments: _____

I certify that pitot tube/probe number 4-4 meets or exceeds all specifications, criteria and/or applicable design features* and is hereby assigned a pitot tube calibration factor of 0.84.

Signature Patrick L. Owen

Date 1/19/84

*See 40 CFR 60, Vol. 42, No. 160, Method 2. Verify the minimum 2 inch setback of the thermocouple and the minimum 3/4 inch separation between the pitot tube and the nozzle as shown at the top of this page.

PITOT TUBE INSPECTION DATA SHEET

Pre-sample Date 1/19/84

Post Sample Date _____

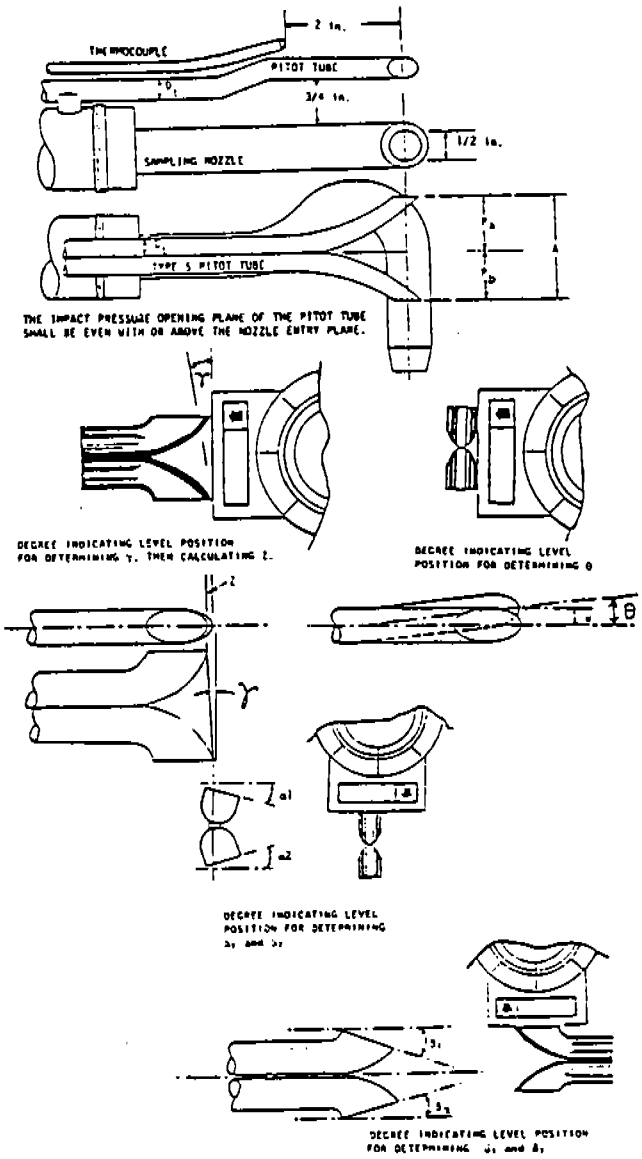

YES	level?	
No	obstructions?	
No	damaged?	
4°	$-10° < \alpha_1 < +10°$	
3°	$-10° < \alpha_2 < +10°$	
2°	$-5° < \beta_1 < +5°$	
2°	$-5° < \beta_2 < +5°$	
0°	γ	
0°	θ	
.884	A	
.443	$1.05\ D_t < P_a < 1.5\ D_t$	
.441	$1.05\ D_t < P_b < 1.5\ D_t$	
.375	$3/16" \leq D_t \leq 3/8"$	
0	$A \tan \gamma < 0.125"$	
0	$A \tan \theta < 0.03125"$	
YES	$P_a = P_b \pm 0.063"$	

Comments: _____

I certify that pitot tube/probe number 4-5 meets or exceeds all specifications, criteria and/or applicable design features* and is hereby assigned a pitot tube calibration factor of 0.84.

Signature Patrick L. Owen

Date 1/19/84

*See 40 CFR 60, Vol. 42, No. 160, Method 2. Verify the minimum 2 inch setback of the thermocouple and the minimum 3/4 inch separation between the pitot tube and the nozzle as shown at the top of this page.

ENTROPY

Dry Gas Meter Identification: 1017057 Calibration by: _____

Date: 2-11-84 Barometric Pressure (P_b): 29.5 in. Hg

ENTROPY ENVIRONMENTALISTS, INC.

*Date: _____ *Barometric Pressure (P_b): _____ in. Hg

Approx. Flow Rate (Q) cfm	Spirometer #2502 Gas Volume (V_s) ft^3	Spirometer #2502 Temp. (t_s) °F	Dry Gas Meter Gas Volume (V_{ds}) ft^3	Dry Gas Meter Temp. (t_{ds}) °F	Pressure (Δp) in. H_2O	Time (Θ) min.	Flow Rate (Q) cfm	Meter Meter Coeff. (Y_{ds})	Avg. Meter Coeff. ($\bar{Y}_{ds}$)
0.25	2.5501	77	2.614	75	-0.4	10.02	0.2465	0.9729	
	2.5501	77	2.604	75	-0.4	10.0	0.2469	0.9766	
	2.5228	77	2.583	75	-0.3	10.0	0.2450	0.9738	
0.40	4.1986	79	4.232	75	-0.75	10.0	0.4051	0.9866	
	4.1712	79	4.219	75	-0.75	10.0	0.4024	0.9832	
	4.1439	79	4.232	75	-0.75	10.0	0.3998	0.9737	
0.60	6.2113	79	6.332	75	-1.5	10.0	0.5997	0.9773	
	6.2477	79	6.324	75	-1.5	10.0	0.6032	0.9843	
	6.2113	79	6.337	76	-1.5	10.0	0.5997	0.9784	
0.80	8.2059	79	8.396	76	-2.4	10.0	0.7922	0.9778	
	8.2059	79	8.386	76	-2.4	10.0	0.7928	0.9789	
	8.1876	79	8.379	76	-2.4	10.0	0.7910	0.9776	
1.00	10.5101	77	10.796	76	-3.85	10.0	1.0192	0.9811	
	10.4736	77	10.769	76	-3.8	10.0	1.0156	0.9800	
	10.4190	77	10.725	76	-3.8	10.0	1.0103	0.9789	

$$Y_{ds} = \frac{(V_s)\ (t_{ds} + 460)\ (P_b)}{(V_{ds})\ (t_s + 460)\ (P_b + \Delta p / 13.6)}$$

$$Q = (17.64)\ \frac{(P_b)\ (V_s)}{(t_s + 460)\ (\theta)}$$

Dry Gas Meter Identification: 1017057 Calibration by: _____

Date: 2-11-86 Barometric Pressure (P_b): 29.5 in. Hg

ENTROPY ENVIRONMENTALISTS, INC.

*Date: _____ *Barometric Pressure (P_b): _____ in. Hg

Approx. Flow Rate (Q) cfm	Spirometer #2502 Gas Volume (V_s) ft^3	Spirometer #2502 Temp. (t_s) °F	Dry Gas Meter Gas Volume (V_{ds}) ft^3	Dry Gas Meter Temp. (t_{ds}) °F	Pressure (Δp) in. H_2O	Time (θ) min.	Flow Rate (Q) cfm	Meter Meter Coeff. (Y_{ds})	Avg. Meter Coeff. ($\bar{Y}_{ds}$)
1.20	12.2951	77	12.725	76	-5.2	10.0	1.1923	0.9771	
	12.3224	77	12.750	76	-5.2	10.0	1.1949	0.9773	
	12.2860	77	12.729	76	-5.2	10.0	1.1914	0.9760	
1.40	14.3443	77	14.921	76	-6.8	10.0	1.3910	0.9761	
	14.3261	77	14.915	76	-6.9	10.0	1.3892	0.9755	
	14.3261	77	14.924	76	-6.9	10.0	1.3911	0.9749	
				$\bar{Y}_{ds}$ = 0.9780					

$$Y_{ds} = \frac{(V_s)\ (t_{ds} + 460)\ (P_b)}{(V_{ds})\ (t_s + 460)\ (P_b + (\Delta p / 13.6))}$$

$$Q = (17.64)\ \frac{(P_b)\ (V_s)}{(t_s + 460)\ (\theta)}$$

CALIBRATION BY: DR

METER BOX NUMBER: N-2

DATE: 4-3-86

BAROMETRIC PRESSURE (P_B): 29.68 IN. HG

*DATE: _____

*BAROMETRIC PRESSURE (P_B): _____ IN. HG

STANDARD METER NUMBER: 1017057

COEFFICIENT (Y_{DS}): 1.0020

NOMINAL FLOW RATE ($\tilde{Q}$) CFM	STANDARD DRY GAS METER			METER BOX METERING SYSTEM		
	GAS VOLUME (V_{DS}) FT^3	TEMP. (T_{DS}) °F	TIME (θ) MIN.	ORIFICE SETTING (ΔH) IN. H_2O	GAS VOLUME (V_D) FT^3	TEMP. (T_D) °F
	4.248	70°	10.0	0.50	4.319	74°
	4.257	70°	10.0	0.50	4.339	76°
	8.399	71°	10.0	2.10	8.474	80°
	8.350	71°	10.0	2.10	8.496	83°
	12.593	71°	10.0	4.80	12.691	86°
	12.580	71°	10.0	4.80	12.769	87°

NOMINAL FLOW RATE ($\tilde{Q}$) CFM	METER BOX METERING SYSTEM			
	FLOW RATE (Q_D) CFM	ORIFICE FACTOR (OF)	COEFF. (Y_D)	ΔH @ IN. H_2O
	0.4205	2.999	0.9917	1.550
	0.4214	3.005	0.9930	1.538
	0.8298	6.181	1.0047	1.654
	0.8249	6.198	1.0018	1.664
	1.2441	9.397	1.0103	1.663
	1.2428	9.406	1.0050	1.663
	AVERAGE		1.0011	1.62

$$\Delta H_@ = \frac{0.0317 * \Delta H}{P_b * (t_d + 460)} * \left[\frac{(t_{ds} + 460) * \theta}{Y_{ds} * V_{ds}}\right]^2$$

$$Y_d = \frac{Y_{ds} * V_{ds} * (t_d + 460) * P_b}{V_d * (t_{ds} + 460) * (P_b + \Delta H/13.6)}$$

Meter Box Number: N5 Calibration by: T. Taylor

Meter Box Vacuum: 9 in. Hg

Standard Meter Number: 1017057 Standard Meter Gamma: 1.002

Date: 4-3-86 Barometric Pressure (P_b): 29.70 in. Hg

Standard Meter			Meter Box Metering System				
Gas Volume (V_{ds}) ft^3	Temp. (t_{ds}) °F	Time (θ) min.	Orifice Setting (ΔH) in. H_2O	Gas Volume (V_d) ft^3	Temp. (t_d) °F	Coeff. (Y_d)	$\Delta H_@$ in. H_2O
7.540	72	10.0	1.95	7.551	80	1.011	1.91
7.719	72	10.0	1.95	7.828	85	1.007	1.81
7.466	72	10.0	1.95	7.608	89	1.010	1.92
					Average	1.009	1.88

$$Y_d = \frac{Y_{ds} * V_{ds} * (t_d + 460) * P_b}{V_d * (t_{ds} + 460) * (P_b + \Delta H/13.6)}$$

$$\Delta H_@ = \frac{0.0317 * \Delta H}{P_b * (t_d + 460)} * \left[\frac{(t_{ds} + 460) * \theta}{Y_{ds} * V_{ds}}\right]^2$$

Meter Box Number: N7

Calibration by: T. Taylor

Meter Box Vacuum: 8 in. Hg

Standard Meter Number: 1017057 Standard Meter Gamma: 1.002

Date: 4-3-86 Barometric Pressure (P_b): 29.70 in. Hg

Standard Meter			Meter Box Metering System				
Gas Volume (V_{ds}) ft^3	Temp. (t_{ds}) °F	Time (θ) min.	Orifice Setting (ΔH) in. H_2O	Gas Volume (V_d) ft^3	Temp. (t_d) °F	Coeff. (Y_d)	$\Delta H_@$ in. H_2O
7.554	72	10.0	1.90	7.835	88	.9905	1.83
7.529	72	10.0	1.9	7.869	91	.9883	1.83
7.541	72	10.0	1.9	7.905	93	.9889	1.82
					Average	.9892	1.83

$$Y_d = \frac{Y_{ds} * V_{ds} * (t_d + 460) * P_b}{V_d * (t_{ds} + 460) * (P_b + \Delta H/13.6)}$$

$$\Delta H_@ = \frac{0.0317 * \Delta H}{P_b * (t_d + 460)} * \left[\frac{(t_{ds} + 460) * \theta}{Y_{ds} * V_{ds}}\right]^2$$

Meter Box Number: N 8

Calibration by: T. Taylor

Meter Box Vacuum: 6 in. Hg

Standard Meter Number: 1017057 Standard Meter Gamma: 1.002

Date: 4-3-86 Barometric Pressure (P_b): 29.70 in. Hg

Standard Meter			Meter Box Metering System				
Gas Volume (V_{ds}) ft^3	Temp. (t_{ds}) °F	Time (θ) min.	Orifice Setting (ΔH) in. H_2O	Gas Volume (V_d) ft^3	Temp. (t_d) °F	Coeff. (Y_d)	$\Delta H_@$ in. H_2O
7.067	71	10.0	1.65	7.282	83	.9903	1.82
7.071	71	10.0	1.65	7.402	86	.9802	1.81
7.054	71	10.0	1.65	7.437	90	.9804	1.81
					Average	.9836	1.81

$$Y_d = \frac{Y_{ds} * V_{ds} * (t_d + 460) * P_b}{V_d * (t_{ds} + 460) * (P_b + \Delta H/13.6)}$$

$$\Delta H_@ = \frac{0.0317 * \Delta H}{P_b * (t_d + 460)} * \left[\frac{(t_{ds} + 460) * \theta}{Y_{ds} * V_{ds}}\right]^2$$

Meter Box Number: N9

Calibration by: T. Tayka

Standard Meter Number: 1017057 Standard Meter Gamma: 1.002

Date: 4-9-86 Barometric Pressure (P_b): 29.20 in. Hg

*Date: _____ *Barometric Pressure (P_b): _____ in. Hg

Standard Meter			Meter Box Metering System				
Gas Volume (V_{ds}) ft^3	Temp. (t_{ds}) °F	Time (θ) min.	Orifice Setting (ΔH) in. H_2O	Gas Volume (V_d) ft^3	Temp. (t_d) °F	Coeff. (Y_d)	$\Delta H_@$ in. H_2O
4.028	70	10.0	.50	4.001	73	1.013	1.76
4.012	70	10.0	.50	4.000	74	1.011	1.77
8.121	70	10.0	2.1	8.190	77	1.001	1.80
8.141	70	10.0	2.1	8.229	77	.9991	1.79
12.333	70	10.0	4.8	12.502	80	.9951	1.78
12.285	70	10.0	4.8	12.563	82	.9900	1.78
					Average	1.002	1.78

$$Y_d = \frac{Y_{ds} * V_{ds} * (t_d + 460) * P_b}{V_d * (t_{ds} + 460) * (P_b + H/13.6)}$$

$$\Delta H_@ = \frac{0.0317 * \Delta H}{P_b * (t_d + 460)} * \left[\frac{(t_{ds} + 460) * \theta}{Y_{ds} * V_{ds}} \right]^2$$

Meter Box Number: N10

Calibration by: T. McDonald

Standard Meter Number: 6838323 Standard Meter Gamma: 1.0042

Date: 4-8-86 Barometric Pressure (P_b): 29.20 in. Hg

*Date: _____ *Barometric Pressure (P_b): _____ in. Hg

Standard Meter			Meter Box Metering System				
Gas Volume (V_{ds}) ft^3	Temp. (t_{ds}) °F	Time (θ) min.	Orifice Setting (ΔH) in. H_2O	Gas Volume (V_d) ft^3	Temp. (t_d) °F	Coeff. (Y_d)	$\Delta H_@$ in. H_2O
4.144	72	10.0	0.50	4.330	82	.9779	1.64
4.218	74	10.0	0.50	4.353	77	.9773	1.61
8.345	74	10.0	2.1	8.557	81	.9869	1.71
8.271	74	10.0	2.1	8.562	84	.9830	1.73
12.560	73	10.0	4.8	12.929	88	.9910	1.70
12.504	72	10.0	4.8	12.926	90	.9923	1.70
					Average	.9847	1.68

$$Y_d = \frac{Y_{ds} * V_{ds} * (t_d + 460) * P_b}{V_d * (t_{ds} + 460) * (P_b + H/13.6)}$$

$$\Delta H_@ = \frac{0.0317 * \Delta H}{P_b * (t_d + 460)} * \left[\frac{(t_{ds} + 460) * \theta}{Y_{ds} * V_{ds}} \right]^2$$

Meter Box Number: N14

Calibration by: T. Taylor

Meter Box Vacuum: 11 in. Hg

Standard Meter Number: 1017057 Standard Meter Gamma: 1.002

Date: 4-4-92 Barometric Pressure (P_b): 29.80 in. Hg

Standard Meter			Meter Box Metering System				
Gas Volume (V_{ds}) ft^3	Temp. (t_{ds}) °F	Time (θ) min.	Orifice Setting (ΔH) in. H_2O	Gas Volume (V_d) ft^3	Temp. (t_d) °F	Coeff. (Y_d)	$\Delta H_@$ in. H_2O
11.688	70	10.0	4.55	12.126	87	.9857	1.81
11.675	70	10.0	4.55	12.153	88	.9842	1.81
11.672	70	10.0	4.55	12.161	89	.9851	1.81
					Average	0.9850	1.81

$$Y_d = \frac{Y_{ds} * V_{ds} * (t_d + 460) * P_b}{V_d * (t_{ds} + 460) * (P_b + \Delta H/13.6)}$$

$$\Delta H_@ = \frac{0.0317 * \Delta H}{P_b * (t_d + 460)} * \left[\frac{(t_{ds} + 460) * \theta}{Y_{ds} * V_{ds}}\right]^2$$

Meter Box Number: RAC 2 Calibration by: T. Taylor

Meter Box Vacuum: 7 in. Hg

Standard Meter Number: 1017057 Standard Meter Gamma: 1.002

Date: 4-4-86 Barometric Pressure (P_b): 29.80 in. Hg

Standard Meter			Meter Box Metering System				
Gas Volume (V_{ds}) ft^3	Temp. (t_{ds}) °F	Time (θ) min.	Orifice Setting (ΔH) in. H_2O	Gas Volume (V_d) ft^3	Temp. (t_d) °F	Coeff. (Y_d)	$\Delta H_@$ in. H_2O
11.009	70	10.0	4.1	11.475	104	1.0127	1.79
10.962	70	10.0	4.1	11.509	107	1.011	1.79
10.938	70	10.0	4.1	11.526	109.5	1.012	1.79
					Average	1.012	1.79

$$Y_d = \frac{Y_{ds} * V_{ds} * (t_d + 460) * P_b}{V_d * (t_{ds} + 460) * (P_b + \Delta H/13.6)}$$

$$\Delta H_@ = \frac{0.0317 * \Delta H}{P_b * (t_d + 460)} * \left[\frac{(t_{ds} + 460) * \theta}{Y_{ds} * V_{ds}}\right]^2$$

ENTROPY

Date:	03·25·86	Time:	1138–1148
Client:	EMB / Greensboro Industrial Platers	Auditor:	BF Rudd
P_{bar}:	29.5 in. Hg.	Meter Box No.:	N·2
ΔH@:	1.58	Pretest Y:	0.998

Orifice gauge reading Δ H@ in. H_2O	Dry gas meter reading V_i/V_f ft^3	Meter Temperatures T_i/T_f	Duration of run θ min.
1.58	666.465	90	10
	660.705	90	

Dry Gas meter volume V_m ft^3	Meter temperature average t_m °F	Pretest Y 0.97Y 1.03Y	Calculated Y_c	Audit $0.97Y < Y_c < 1.03Y$ Acceptable
5.760	90	0.9681	1.339	
		1.0279		

Calculated Y_c

$$\frac{10}{V_m}\left(\frac{0.0319\ (tm + 460)}{P_{bar}}\right)^{1/2} = \frac{10}{(5.760)}\left(\frac{0.0319(\overset{550}{90 + 460})}{(29.5)}\right)^{1/2}$$

Figure 5.2. Meter box audit.

Date: 03·25·86 Time: 1153 - 1203

Client: EMB / GREENSBORO IND. PLATERS Auditor: B. RUDD

P_{bar}: 29.5 in. Hg. Meter Box No.: N.5

ΔH@: 1.82 Pretest Y: 0.994

Orifice gauge reading ΔH@ in. H_2O	Dry gas meter reading V_i/V_f ft^3	Meter Temperatures T_i/T_f	Duration of run θ min.
1.82	533.370	84	10
	540.850	88	

Dry Gas meter volume V_m ft^3	Meter temperature average t_m °F	Pretest Y 0.97Y 1.03Y	Calculated Y_c	Audit $0.97Y < Y_c < 1.03Y$ Acceptable
7.480	86	0.9642	1.0273	
		1.0238		

Calculated Y_c

$$\frac{10}{V_m}\left(\frac{0.0319\ (tm + 460)}{P_{bar}}\right)^{1/2} = \frac{10}{(7.480)}\left(\frac{0.0319(86 + 460)}{(29.5)}\right)^{1/2}$$

Figure 5.2. Meter box audit.

Date:	3/25/86	Time:	12:16
Client:		Auditor:	WSN
P_{bar}:	29.5 in. Hg.	Meter Box No.:	N·7
ΔH@:	1.75	Pretest Y:	1.000

Orifice gauge reading Δ H@ in. H_2O	Dry gas meter reading V_i/V_f ft^3	Meter Temperatures T_i/T_f	Duration of run θ min.
1.75	886.595	80	10
	894.232	83	

Dry Gas meter volume V_m ft^3	Meter temperature average t_m °F	Pretest Y 0.97Y 1.03Y	Calculated Y_c	Audit 0.97Y < Y_c < 1.03Y Acceptable
7.637	81.5	0.9700	1.002	1.002
		1.0300		

Calculated Y_c

$$\left(\frac{10}{V_m}\right)\sqrt{\left(\frac{0.0319\ (tm + 460)}{P_{bar}}\right)} = \left(\frac{10}{(7.637)}\right)\sqrt{\left(\frac{0.0319(\ 81.5 + 460)}{(\ 29.5\ )}\right)}$$

Figure 5.2. Meter box audit.

Date: 3-26-86 Time: 12:34/12:44

Client: EMB/GREENSBORO INDUSTRIAL PLATERS Auditor: DR

P_{bar}: 29.50 in. Hg. Meter Box No.: N-7

ΔH@: 1.75 Pretest Y: 1.000

Orifice gauge reading Δ H@ in. H_2O	Dry gas meter reading V_i/V_f ft^3	Meter Temperatures T_i/T_f	Duration of run θ min.
1.75	56.612	81°	10
	64.207	84°	

Dry Gas meter volume V_m ft^3	Meter temperature average t_m °F	Pretest Y 0.97Y 1.03Y	Calculated Y_c	Audit 0.97Y < Y_c < 1.03Y Acceptable
7.595	82.5°	0.9700	1.0085	ok
		1.0300		

Calculated Y_c

$$\frac{10}{V_m}\left(\frac{0.0319\ (tm + 460)}{P_{bar}}\right)^{1/2} = \frac{10}{(7.595)}\left(\frac{0.0319(82.5 + 460)}{(29.5)}\right)^{1/2}$$

Figure 5.2. Meter box audit.

Date:	03.26.86	Time:	1247 - 1257
Client:	EMB / GREENSBORO IND. PLOTERS	Auditor:	B. RUDD
P_{bar}:	29.5 in. Hg.	Meter Box No.:	N.8
$\Delta H@$:	1.61	Pretest Y:	1.0119

Orifice gauge reading $\Delta H@$ in. H_2O	Dry gas meter reading V_i/V_f ft^3	Meter Temperatures T_i/T_f	Duration of run θ min.
1.61	691.599	83	10
	698.969	88	

Dry Gas meter volume V_m ft^3	Meter temperature average t_m ^oF	Pretest Y 0.97Y 1.03Y	Calculated Y_c	Audit $0.97Y < Y_c < 1.03Y$ Acceptable
7.370	85.5	0.9815	1.0421	
		1.0423		

Calculated Y_c

$$\frac{10}{V_m}\left(\frac{0.0319\ (tm + 460)}{P_{bar}}\right)^{1/2} = \frac{10}{(7.370)}\left(\frac{0.0319(85.5 + 460)}{(29.5)}\right)^{1/2}$$

Figure 5.2. Meter box audit.

Date:	03·25·86	Time:	0853-0903
Client:	EMB / Greensboro Ind. Planters	Auditor:	BFR
P_{bar}:	29.5 in. Hg.	Meter Box No.:	N-9
ΔH@:	1.60	Pretest Y:	1.0021

Orifice gauge reading ΔH@ in. H_2O	Dry gas meter reading V_i/V_f ft^3	Meter Temperatures T_i/T_f	Duration of run θ min.
1.60	464.815 V_f	77	10
	457.133 V_i	83	

Dry Gas meter volume V_m ft^3	Meter temperature average t_m °F	Pretest Y 0.97Y 1.03Y	Calculated Y_c	Audit $0.97Y < Y_c < 1.03Y$ Acceptable
7.682	80	0.9720	0.9947	OK
		1.0322		

Calculated Y_c

$$\frac{10}{V_m}\left(\frac{0.0319\ (t_m + 460)}{P_{bar}}\right)^{1/2} = \frac{10}{(7.682)}\left(\frac{0.0319(80 + 460)}{(29.5)}\right)^{1/2}$$

540

Figure 5.2. Meter box audit.

Date: 3-26-86 Time: 07:30/07:40

Client: EMB/GREENSBORO INDUSTRIAL PLATERS Auditor: DR

P_{bar}: 29.50 in. Hg. Meter Box No.: N-14

ΔH@: 1.76 Pretest Y: 0.993

Orifice gauge reading Δ H@ in. H_2O	Dry gas meter reading V_i/V_f ft^3	Meter Temperatures T_i/T_f	Duration of run θ min.
1.76	794.689	70°	10
	802.255	76°	

Dry Gas meter volume V_m ft^3	Meter temperature average t_m °F	Pretest Y 0.97Y 1.03Y	Calculated Y_c	Audit $0.97Y < Y_c < 1.03Y$ Acceptable
7.566	73°	0.9632	1.0034	ok
		1.0228		

Calculated Y_c

$$\frac{10}{V_m}\left(\frac{0.0319\ (tm + 460)}{P_{bar}}\right)^{1/2} = \frac{10}{(7.566)}\left(\frac{0.0319(\ 73\ + 460)}{(\ 29.50\ )}\right)^{1/2}$$

Figure 5.2. Meter box audit.

Date: 03.26.86 Time: 1641 - 1651

Client: EMB/GREENSBORO IND. PLASTERS Auditor: B. RUDD

P_{bar}: 29.50 in. Hg. Meter Box No.: RAC-2

ΔH@: 1.75 Pretest Y: 0.996

Orifice gauge reading Δ H@ in. H_2O	Dry gas meter reading V_i/V_f ft^3	Meter Temperatures T_i/T_f	Duration of run θ min.
1.75	244.637	96/73 = 85	10
	252.198	105/78 = 92	

Dry Gas meter volume V_m ft^3	Meter temperature average t_m °F	Pretest Y 0.97Y 1.03Y	Calculated Y_c	Audit $0.97Y < Y_c < 1.03Y$ Acceptable
7.561	89	0.9661	1.090	
		1.0259		

Calculated Y_c

$$\frac{10}{V_m}\left(\frac{0.0319\ (tm + 460)}{P_{bar}}\right)^{1/2} = \frac{10}{(7.561)}\left(\frac{0.0319(\ 89\ + 460)}{(\ 29.5\ )}\right)^{1/2}$$

Figure 5.2. Meter box audit.

CUSTODY SHEET FOR REAGENT BOX # 0231

Date of Makeup 3/14/86 Initials MJD Locked? ✓

Individual Tare of Reagent: 300.0 gms. of 0.1 N NaOH

Individual Tare of Reagent: _____ gms. of _____

Individual Silica Gel Tare Weight 200.0 gms.

PLANT NAME EMB / GREENSBORO INDUSTRIAL PLASTERS

SAMPLING LOCATION #5 COATING TANK EXHAUST

Run Number	Date Used	Initials	Locked?	Date Cleanup	% S. Gel Spent	Initials	Locked
TE-1A	03-18-86	BFR	✓	03-18-86	5	BFR	✓
TE-2A	03-18-86	BFR	✓	03-18-86	5	BFR	✓
TE-3A	03-18-86	CJF	✓	03-18-86	5	CJF	✓

Received in Lab Date 3/19/86 Initials FJP Locked? ✓

Zero & Span Balance Initials _____

Sampling Method: M13A for Chromium

Filter #	Tare Weight (mgms)	Used on Test

Remarks:

ENTROPY ENVIRONMENTALISTS, INC.

CUSTODY SHEET FOR REAGENT BOX # 0220

Date of Makeup 3-21-86 Initials SSH Locked? ✓

Individual Tare of Reagent: 200.0 mls. of 0.1N NaOH

Individual Tare of Reagent: _____ mls. of _____

Individual Silica Gel Tare Weight 200.0 gms.

PLANT NAME GREENSBORO INDUSTRIAL PLATERS

SAMPLING LOCATION COATING TANK 5 - TRAIN A

Run Number	Date Used	Initials	Locked?	Date Cleanup	% S. Gel Spent	Initials	Locked?
TE-7A	3-24-86	CJF	✓	3-24-86	10	BFR	✓
TE-8A	03.24.86	BFR	✓	03.24.86	5	BFR	✓
TE-9A	03.25.86	BFR	✓	03.25.86	10	BFR	✓

Received in Lab	Date	Initials	Locked?

Sampling Method: _____

Remarks:

Zero & Span Balance Initials _____

Filter #	Tare Weight (mgms)	Used on Test

CUSTODY SHEET FOR REAGENT BOX # 0207

Date of Makeup 3-21-86 Initials SSH Locked? ✓

Individual Tare of Reagent: 200.0 mls. of 0.1 N NaOH

Individual Tare of Reagent: _____ mls. of _____

Individual Silica Gel Tare Weight 200.0 gms.

PLANT NAME EMB / GREENSBORO INDUSTRIAL PLASTERS

SAMPLING LOCATION #5 COATING TANK

Run Number	Date Used	Initials	Locked?	Date Cleanup	% S. Gel Spent	Initials	Locked?
TE-10A	03-25-86	BFR	✓	03-25-86	10	BFR	✓
TE-11A	03-25-86	BFR	✓	03-25-86	10	BFR	✓
TE-12A	03-25-86	BFR	✓	03-25-86	10	BFR	✓

Received in Lab Date _____ Initials _____ Locked? _____

Zero & Span Balance Initials _____

Sampling Method: _____

Filter #	Tare Weight (mgms)	Used on Test

Remarks:

ENTROPY ENVIRONMENTALISTS, INC.

CUSTODY SHEET FOR REAGENT BOX # 0235

Date of Makeup 3-21-86 Initials SSH Locked? ✓

Individual Tare of Reagent: 200.0 mls. of 0.1N NaOH

Individual Tare of Reagent: _____ mls. of _____

Individual Silica Gel Tare Weight 200.0 gms.

PLANT NAME GREENSBORO Industrial Plates

SAMPLING LOCATION TANK 5

Run Number	Date Used	Initials	Locked?	Date Cleanup	% S. Gel Spent	Initials	Locked?
TE-13A	3-26-86	CJF	—	3-26-86	15	CJF	✓
TE-14A	3-26-86	CJF	✓	3-26-86	15	CJF	✓

	Date	Initials	Locked?
Received in Lab			

Sampling Method:

Remarks:

Zero & Span Balance Initials

Filter #	Tare Weight (mgms)	Used on Test

ENTROPY ENVIRONMENTALISTS, INC.

CUSTODY SHEET FOR REAGENT BOX # 0237

Date of Makeup 3/14/86 Initials MJD Locked? ✓

Individual Tare of Reagent: 300.0 gms. of DISTILLED H_2O

Individual Tare of Reagent: _____ gms. of _____

Individual Silica Gel Tare Weight 200.0 gms.

PLANT NAME EMB/GREENSBORO INDUSTRIAL PLATERS

SAMPLING LOCATION TANK EXHAUST

Run Number	Date Used	Initials	Locked?	Date Cleanup	% S. Gel Spent	Initials	Locked
TE-1B	3-18-86	DR	YES	3-18-86	10	DR	YES
TE-2B	03.18.86	BFR	✓	03.18.86	10	BFR	✓
TE-3B	03.18.86	BFR	✓	03.18.86	10	BFR	✓

Received in Lab Date 3/19/86 Initials FTP Locked? ✓

Zero & Span Balance Initials _____

Sampling Method: M13A for Chromium

Filter #	Tare Weight (mgms)	Used on Test

Remarks:

CUSTODY SHEET FOR REAGENT BOX # 0277

Date of Makeup 3/14/86 Initials MTD Locked? ✓

Individual Tare of Reagent: ~~200.0~~ 200.0 mls. of 0.1 N NaOH

Individual Tare of Reagent: _____ mls. of _____

Individual Silica Gel Tare Weight 200.0 gms.

PLANT NAME EMB / GREENSBORO INDUSTRIAL PLATERS

SAMPLING LOCATION #5 COATING TANK - TRAIN B

Run Number	Date Used	Initials	Locked?	Date Cleanup	% S. Gel Spent	Initials	Locked?
TE-7B	03.24.86	BFR	✓	03.24.86	10	BFR	✓
TE-8B	3-24-86	CJF	✓	3-24-86	10%	CJF	✓
TE-9B	3.25.86	CJF	✓	3.25.86	10%	CJF	✓

Received in Lab Date _____ Initials _____ Locked? _____

Sampling Method: _____

Remarks:

Zero & Span Balance Initials _____

Filter #	Tare Weight (mgms)	Used on Test

ENTROPY ENVIRONMENTALISTS, INC.

CUSTODY SHEET FOR REAGENT BOX # 0219

Date of Makeup 3-21-86 Initials SSH Locked? ✓

Individual Tare of Reagent: 200.0 mls. of 0.1N N_a OH

Individual Tare of Reagent: _____ mls. of _____

Individual Silica Gel Tare Weight 200.0 gms.

PLANT NAME GREENSBORO Industrial PLATERS

SAMPLING LOCATION TANK 5 - B TRAIN

Run Number	Date Used	Initials	Locked?	Date Cleanup	% S. Gel Spent	Initials	Locked?
TE-10B	3-25-86	BFR	✓	03-25-86	5	BFR	✓
TE-11B	3-25-86	BFR	✓	03-25-86	5	BFR	✓
TE-12B	03-25-86	BFR	✓	03-25-86	5	BFR	✓

Received in Lab Date _____ Initials _____ Locked? _____

Zero & Span Balance Initials _____

Sampling Method: _____

Filter #	Tare Weight (mgms)	Used on Test

Remarks:

ENTROPY ENVIRONMENTALISTS, INC.

CUSTODY SHEET FOR REAGENT BOX # 022A

Date of Makeup 3-21-86 Initials SSH Locked? ✓

Individual Tare of Reagent: 200.0 mls. of 0.1N NaOH

Individual Tare of Reagent: _____ mls. of _____

Individual Silica Gel Tare Weight 200.0 gms.

PLANT NAME GREENSBORO Industrial Platers

SAMPLING LOCATION TANK 5 EXHAUST

Run Number	Date Used	Initials	Locked?	Date Cleanup	% S. Gel Spent	Initials	Locked?
TE-13B	3.26.86	C.J.F.	✓	3.26.86	10	CJF	✓
TE-14B	3.26.86	C.J.F.	✓	3.26.86	10	CJF	✓

Received in Lab Date _____ Initials _____ Locked? _____

Sampling Method: M-5 w/BACK½ RINSE

Remarks:

Zero & Span Balance Initials _____

Filter #	Tare Weight (mgms)	Used on Test

ENTROPY ENVIRONMENTALISTS, INC.

CUSTODY SHEET FOR REAGENT BOX # 0216

Date of Makeup 3/14/86 Initials MJD Locked? ✓

Individual Tare of Reagent: ~~300.0~~ 200.0 gms. of DISTILLED H_2O

Individual Tare of Reagent: _____ gms. of _____

Individual Silica Gel Tare Weight 200.0 gms.

PLANT NAME Greensboro Industrial Platers

SAMPLING LOCATION Outlet Stack

Run Number	Date Used	Initials	Locked?	Date Cleanup	% S. Gel Spent	Initials	Locked
MO-5A	3·26·86	C.J.F	✓	3·26·86	10	C.J.F	✓
MO-6A	3·26·86	C.J.F	✓	3·26·86	10	C.J.F	✓
MO-7A	3·26·86	C.J.F	✓	3·26·86	15	CJF	✓

Received in Lab Date _____ Initials _____ Locked? _____

Sampling Method: _____

Remarks:

Zero & Span Balance Initials _____

Filter #	Tare Weight (mgms)	Used on Test

ENTROPY ENVIRONMENTALISTS, INC.

CUSTODY SHEET FOR REAGENT BOX # 0202

Date of Makeup 3-21-86 Initials SSH Locked? ✓

Individual Tare of Reagent: 200.0 mls. of 0.1N NaOH

Individual Tare of Reagent: _____ mls. of _____

Individual Silica Gel Tare Weight 200.0 gms.

PLANT NAME Greensboro Industrial Platers

SAMPLING LOCATION M-OUTLET STACK

Run Number	Date Used	Initials	Locked?	Date Cleanup	% S. Gel Spent	Initials	Locked?
MO-5	3-26-86	C.J.F.	✓	3-26-86	15%	C.J.F.	✓
MO-6B	3-26-86	C.J.F.	✓	3-26-86	15	C.J.F.	✓
MO-7B	03-26-86	BFR	✓	03-26-86	15	BFR	✓

	Date	Initials	Locked?
Received in Lab			

Sampling Method: _____

Remarks:

Zero & Span Balance Initials _____

Filter #	Tare Weight (mgms)	Used on Test

APPENDIX E

MRI PROCESS DATA

AMPERE-HOUR CALCULATIONS
TEST NO.
INLET: MI-1; OUTLET: MO-1

Time (24-h clock) Inlet	Time (24-h clock) Outlet	Time interval, min Inlet	Time interval, min Outlet	Current, amperes	Ampere-hours Inlet	Ampere-hours Outlet
08:38	08:36					
08:46	08:46	8	10	7,000	933	1,167
08:56	08:56	10	10	7,000	1,167	1,167
09:06	09:06	10	10	7,000	1,167	1,167
09:16	09:16	10	10	7,000	1,167	1,167
09:19	09:19	1	3	7,000	117	350
Subtotal		39	43		4,551	5,018
09:29	09:29					
09:39	09:39	10	10	5,000	833	833
09:43	09:43	4	4	6,000	400	400
Subtotal		14	14		1,233	1,233
10:07	10:02					
10:17	10:17	10	15	6,000	1,000	1,500
10:27	10:27	10	10	6,000	1,000	1,000
10:37	10:37	10	10	6,000	1,000	1,000
10:47	10:47	10	10	6,000	1,000	1,000
10:57	10:57	10	10	6,000	1,000	1,000
11:07	11:07	10	10	6,000	1,000	1,000
11:17	11:17	10	10	6,000	1,000	1,000
11:27	11:27	10	10	6,000	1,000	1,000
11:30	11:30	7	7	6,000	700	700
Subtotal		87	92		8,700	9,200
11:46	11:46					
11:56	11:50	10	6	4,000	667	400
12:06		10	0	4,000	667	0
12:07		1	0	4,000	67	0
Subtotal		21	6		1,401	400
TOTAL		161	155		15,885	15,851

AMPERE-HOUR CALCULATIONS
TEST NO.
INLET: MI-2; OUTLET: MO-2

Time (24-h clock)		Time interval, min		Current, amperes	Ampere-hours	
Inlet	Outlet	Inlet	Outlet		Inlet	Outlet
13:10	13:10					
13:20	13:20	10	10	4,000	667	667
13:30	13:30	10	10	4,000	667	667
13:40	13:40	10	10	4,000	667	667
13:50	13:50	10	10	4,000	667	667
14:00	14:00	10	10	4,000	667	667
14:10	14:10	10	10	4,000	667	667
14:20	14:20	10	10	7,000	1,167	1,167
14:30	14:30	10	10	7,000	1,167	1,167
14:40	14:40	10	10	7,000	1,167	1,167
14:43	14:43	3	3	7,000	350	350
Subtotal		93	93		7,853	7,853
14:54	14:54					
15:04	15:04	10	10	6,000	1,000	1,000
15:14	15:14	10	10	6,000	1,000	1,000
15:24	15:24	10	10	6,000	1,000	1,000
15:32	15:30	8	6	6,000	800	600
Subtotal		38	36		3,800	3,600
TOTAL		131	129		11,653	11,453

AMPERE-HOUR CALCULATIONS
TEST NO.
INLET: MI-3; OUTLET: MO-3

Time (24-h clock) Inlet	Time (24-h clock) Outlet	Time interval, min Inlet	Time interval, min Outlet	Current, amperes	Ampere-hours Inlet	Ampere-hours Outlet
08:04	08:05					
08:14	08:14	10	9	8,000	1,333	1,200
08:24	09:24	10	10	8,000	1,333	1,333
08:28	08:28	4	4	8,000	533	533
Subtotal		24	23		3,199	3,066
08:45	08:45					
08:55	08:55	10	10	8,000	1,333	1,333
09:05	09:05	10	10	8,000	1,333	1,333
09:15	09:15	10	10	8,000	1,333	1,333
09:25	09:25	10	10	8,000	1,333	1,333
09:35	09:35	10	10	8,000	1,333	1,333
09:45	09:45	10	10	8,000	1,333	1,333
09:55	09:55	10	10	8,000	1,333	1,333
09:59	09:59	4	4	8,000	533	533
Subtotal		74	74		9,864	9,864
10:13	10:13					
10:23	10:23	10	10	7,750	1,292	1,292
10:33	10:33	10	10	7,750	1,292	1,292
10:42	10:43	9	10	7,750	1,162	1,292
	10:52	0	9	7,750	0	1,162
Subtotal		29	39		3,746	5,038
TOTAL		127	136		16,809	17,968

AMPERE-HOUR CALCULATIONS
TEST NO.
INLET: MI-4; OUTLET: MO-4

Time (24-h clock) Inlet	Time (24-h clock) Outlet	Time interval, min Inlet	Time interval, min Outlet	Current, amperes	Ampere-hours Inlet	Ampere-hours Outlet
11:10	11:10					
11:19	11:19	9	9	7,750	1,162	1,162
Subtotal		9	9		1,162	1,162
11:34	11:34					
11:44	11:44	10	10	7,000	1,167	1,167
11:54	11:54	10	10	6,500	1,083	1,083
12:04	12:04	10	10	6,500	1,083	1,083
12:14	12:14	10	10	6,500	1,083	1,083
12:24	12:24	10	10	6,500	1,083	1,083
12:34	12:34	10	10	6,500	1,083	1,083
12:36	12:36	2	2	6,500	217	217
Subtotal		62	62		6,799	6,799
15:02	15:02					
15:12	15:12	10	10	3,750	625	625
15:22	15:22	10	10	3,750	625	625
15:32	15:32	10	10	3,750	625	625
15:42	15:42	10	10	3,750	625	625
15:52	15:52	10	10	3,750	625	625
16:00	16:02	8	10	3,750	500	625
	16:06	0	4	3,750	0	250
Subtotal		58	64		3,625	4,000
TOTAL		129	135		11,586	11,961

SOURCE SAMPLING PROGRAM
Process Data Sheet

Place: Greensboro Industrial Platers
Date: 3/18/86
Tank No.: 6
Sample type: Total and hexavalent chromium

Test Run No.
Inlet: MI-1
Outlet: MO-1

Test Start Time
Inlet: 8:38
Outlet: 8:36

Test Stop Time
Inlet: 12:07
Outlet: 11:50

Time (24-h clock) Inlet	Time (24-h clock) Outlet	Temperature, F	Operating Voltage, volts	Operating Current, amperes	Pressure Drop, in. w. c.	Notes
8:38	8:36	120	10.5	7,000	0.1	Started testing. Started plating at 7:20.
8:46	8:46	121	10.5	7,000	0.1	Work plated: 3 textile machine rods. Dimension of rods: 13.5 ft. long, 1 in. outside diameter (OD)
8:56	8:56	121	10.5	7,000	0.1	Surface area of rods = 10.60 sq. ft.
9:06	9:06	121	10.5	7,000	0.1	Grab samples of plating solution taken at anode, cathode, and control area.
9:16	9:16	121	10.5	7,000	0.1	
9:19	9:19	121	10.5	7,000	0.1	Stopped testing. Stopped plating. Rods rinsed with clean water over plating tank.
9:29	9:29	120	8.0	5,000	0.2	Started testing. Started plating at 9:29. Work plated: 3 textile machine rods.
9:39	9:39	120	10.0	6,000	0.1	Dimension of rods: 13.5 ft. long, 1 in. O.D. Surface area of rods = 10.6 sq. ft.
9:43	9:43	120	10.0	6,000	0.1	Stopped testing. Vacuum of impinger at outlet plugged.
10:07	10:02	120	10.0	6,000	0.1	Started testing.
10:17	10:17	120	9.5	6,000	0.2	Visible emissions (VE) at stack outlet = 0
10:27	10:27	120	9.5	6,000	0.2	VE = 0. Grab samples of plating solution taken at 9:29 and 11:46.
10:37	10:37	120	9.5	6,000	0.2	VE = 0
10:47	10:47	120	9.5	6,000	0.1	VE = 0
10:57	10:57	120	9.5	6,000	0.1	VE = 0
11:07	11:07	120	9.5	6,000	0.1	VE = 0
11:17	11:17	120	9.5	6,000	0.1	VE = 0
11:27	11:27	120	9.5	6,000	0.1	VE = 0
11:30	11:30	120	9.5	6,000	0.1	Stopped testing. Stopped plating. Rods rinsed with clean water over plating tank.
11:46	11:46	118	5.4	4,000	0.1	Started testing. Started plating at 11:46. Work plated: 4 textile machine rods. VE = 0.
11:56	11:50	118	6.5	4,000	0.1	Dimension of rods: 14 ft. 10 in. long, 1.44 in. O.D. Surface area of rods = 22.37 sq. ft. VE = 0. [Observed mist escaping over capture hoods.]
12:07		116	6.3	4,000	0.1	Stopped testing.

SOURCE SAMPLING PROGRAM
Process Data Sheet

Place: Greensboro Industrial Platers
Date: 3/25/86
Tank No.: 6
Sample type: Particle size

Test Run No.
Inlet: MI-S2
Outlet: MO-S2

Test Start Time
Inlet: 8:32
Outlet: 8:32

Test Stop Time
Inlet: 12:06
Outlet: 13:39

Time (24-h clock) Inlet	Time (24-h clock) Outlet	Temperature, F	Operating Voltage, volts	Operating Current, amperes	Pressure Drop, in. w. c.	Notes
8:32	8:32	125	6.0	2,000	0.6	Started testing

SOURCE SAMPLING PROGRAM
Process Data Sheet

Place: Greensboro Industrial Platers
Date: 3/25/86
Tank No.: 6
Sample type: Particle size

Test Run No.
Inlet: MI-S3
Outlet: MO-S3

Test Start Time
Inlet: 14:19
Outlet: 14:20

Test Stop Time
Inlet: 16:38
Outlet: 16:32

Time (24-h clock) Inlet	Time (24-h clock) Outlet	Temperature, F	Operating Voltage, volts	Operating Current, amperes	Pressure Drop, in. w. c.	Notes
14:19	14:20	135	6.0	3,000	0.5	Started testing.
14:29	14:29	135	6.0	3,000	0.5	Work plated: 8 flutter bars for textile machinery 11 ft. 9.5 in. and 0.5 in. wide; one side plated. Surface area of bars = 3.93 sq. ft.
14:39	14:39	135	6.0	3,000	0.5	
14:49	14:49	135	6.0	3,000	0.5	
14:59	14:59	135	6.0	3,000	0.5	
15:09	15:09	135	6.0	3,000	0.5	
15:19	15:19	135	6.0	3,000	0.5	
15:27	15:27	135	6.0	3,000	0.5	Stopped testing. Stopped plating. Rods rinsed with water over tank for 24 sec.
15:43	15:43	135	6.0	3,750	0.5	Started testing.
15:53	15:53	135	6.0	3,750	0.5	Work plated: 4 rods 17 ft. 9.5 in. long and 3.188 in. O.D. Surface area of rods = 59.40 sq. ft.
16:03	16:03	135	6.0	3,750	0.5	
16:13	16:13	135	6.0	3,750	0.5	
16:23	16:23	135	6.0	3,750	0.6	
16:33	16:32	135	6.0	3,750	0.6	
16:38		135	6.0	3,750	0.6	Stopped testing. Stopped plating. Rods rinsed with water over tank for 30 sec.

SOURCE SAMPLING PROGRAM
Process Data Sheet

Place: Greensboro Industrial Platers
Date: 3/18/86
Tank No.: 5
Sample type: Total and hexavalent chromium

	Test Run No.	Test Start Time	Test Stop Time
Inlet A:	TE-1A	9:15	10:21
Inlet B:	TE-1B	9:15	10:22

Time (24-h clock) Inlet A	Time (24-h clock) Inlet B	Temperature, F	Operating Voltage, volts	Operating Current, amperes	Notes
9:15	9:15	Not Recorded	8.5	3,100	Started testing.
9:25	9:25		8.5	3,100	Work plated: 1 laundry matt press head.
9:35	9:35		8.5	3,100	
9:45	9:45		8.5	3,100	
9:55	9:55		8.5	3,100	
10:05	10:05		8.5	3,100	
10:15	10:15		8.5	3,100	
10:21	10:22		8.5	3,100	Stopped testing. Stopped plating.

SOURCE SAMPLING PROGRAM
Process Data Sheet

Place: Greensboro Industrial Platers
Date: 3/18/86
Tank No.: 5
Sample type: Total and hexavalent chromium

	Test Run No.	Test Start Time	Test Stop Time
Inlet A:	TE-2A	12:53	14:00
Inlet B:	TE-2B	12:54	14:02

Time (24-h clock) Inlet A	Time (24-h clock) Inlet B	Temperature, F	Operating Voltage, volts	Operating Current, amperes	Notes
12:53	12:54	135	8.5	3,300	Started testing.
13:03	13:03	135	8.5	3,300	Work plated: 1 laundry matt press head.
13:13	13:13	135	8.5	3,300	
13:23	13:23	135	8.5	3,300	
13:33	13:33	135	8.5	3,300	
13:43	13:43	135	8.5	3,300	
13:53	13:53	135	8.5	3,300	
14:00	14:02	135	8.5	3,300	Stopped testing.

SOURCE SAMPLING PROGRAM
Process Data Sheet

Place: Greensboro Industrial Platers
Date: 3/18/86
Tank No.: 5
Sample type: Total and hexavalent chromium

	Test Run No.	Test Start Time	Test Stop Time
Inlet A:	TE-3A	14:29	15:33
Inlet B:	TE-3B	14:30	15:34

Time (24-h clock) Inlet A	Time (24-h clock) Inlet B	Temperature, F	Operating Voltage, volts	Operating Current, amperes	Notes
14:29	14:30	Not Recorded	4.5	1,000	Started testing. Turned current on because work had old chromium plating on it. Work plated: 1 laundry matt press head.
14:39	14:39		8.5	3,100	
14:49	14:49		8.5	3,100	
14:59	14:59		8.5	3,100	
15:09	15:09		8.5	3,100	
15:19	15:19		8.5	3,100	
15:29	15:29		8.5	3,100	
15:33	15:34		8.5	3,100	Stopped testing.

SOURCE SAMPLING PROGRAM
Process Data Sheet

Place: Greensboro Industrial Platers
Date: 3/19/86
Tank No.: 5
Sample type: Total and hexavalent chromium

	Test Run No.	Test Start Time	Test Stop Time
Inlet A:	TE-4A	9:24	10:31
Inlet B:	TE-4B	9:26	10:32

Time (24-h clock) Inlet A	Time (24-h clock) Inlet B	Temperature, F	Operating Voltage, volts	Operating Current, amperes	Notes
9:24	9:26	130	3.0	1,600	Started testing.
9:34	9:34	130	3.0	1,600	Work plated: 1 steel part for furniture industry 60 in. long and 11 in. wide; one side plated. Surface area of part = 4.58 sq. ft.
9:44	9:44	130	3.0	1,600	
9:54	9:54	130	3.0	1,600	
10:04	10:04	130	3.0	1,600	
10:14	10:14	130	3.0	1,600	
10:24	10:24	130	3.0	1,600	
10:31	10:32	130	3.0	1,600	Stopped testing.

SOURCE SAMPLING PROGRAM
Process Data Sheet

Place: Greensboro Industrial Platers
Date: 3/19/86
Tank No.: 5
Sample type: Total and hexavalent chromium

	Test Run No.	Test Start Time	Test Stop Time
Inlet A:	TE-5A	11:05	12:11
Inlet B:	TE-5B	11:05	12:11

Time (24-h clock) Inlet A	Time (24-h clock) Inlet B	Temperature, F	Operating Voltage, volts	Operating Current, amperes	Notes
11:05	11:05	Not Recorded	3.0	1,600	Started testing.
11:15	11:15		3.0	1,600	Work plated: 1 steel part for furniture industry 60 in. long and 11 in. wide; one side plated. Surface area of part = 4.58 sq. ft.
11:25	11:25		3.0	1,600	
11:35	11:35		3.0	1,600	
11:45	11:45		3.0	1,600	
11:55	11:55		3.0	1,600	
12:05	12:05		3.0	1,600	
12:11	12:11		3.0	1,600	Stopped testing.

SOURCE SAMPLING PROGRAM
Process Data Sheet

Place: Greensboro Industrial Platers
Date: 3/19/86
Tank No.: 5
Sample type: Total and hexavalent chromium

	Test Run No.	Test Start Time	Test Stop Time
Inlet A:	TE-6A	13:05	14:10
Inlet B:	TE-6B	13:06	14:11

Time (24-h clock) Inlet A	Time (24-h clock) Inlet B	Temperature, F	Operating Voltage, volts	Operating Current, amperes	Notes
13:05	13:06	Not Recorded	6.0	2,000	Started testing.
13:15	13:15		6.0	2,000	Work plated: 1 steel part for furniture industry 60 in. long and 11 in. wide; one side plated. Surface area of part = 4.58 sq. ft.
13:25	13:25		6.0	2,000	
13:35	13:35		6.0	2,000	
13:45	13:45		6.0	2,000	
13:55	13:55		8.0	2,100	
14:05	14:05		8.0	2,100	
14:10	14:11		8.0	2,100	Stopped testing.

SOURCE SAMPLING PROGRAM
Process Data Sheet

Place: Greensboro Industrial Platers
Date: 3/24/86
Tank No.: 5
Sample type: Total and hexavalent chromium

	Test Run No.	Test Start Time	Test Stop Time
Inlet A:	TE-7A	13:05	14:10
Inlet B:	TE-7B	13:06	14:11

Time (24-h clock) Inlet A	Time (24-h clock) Inlet B	Temperature, F	Operating Voltage, volts	Operating Current, amperes	Notes
13:05	13:06	Not Recorded	3.2	900	Started testing.
13:15	13:15		3.2	900	Work plated: 1 steel wood panel roll 50 in. long and 6 in. O.D.
13:25	13:25		3.2	900	Surface area of part = 6.54 sq. ft.
13:35	13:35		3.2	900	
13:45	13:45		3.2	900	
13:55	13:55		3.2	900	
14:05	14:05		3.2	900	
14:10	14:11		3.2	900	Stopped testing.

SOURCE SAMPLING PROGRAM
Process Data Sheet

Place: Greensboro Industrial Platers
Date: 3/24/86
Tank No.: 5
Sample type: Total and hexavalent chromium

	Test Run No.	Test Start Time	Test Stop Time
Inlet A:	TE-8A	14:42	15:45
Inlet B:	TE-8B	14:43	15:46

Time (24-h clock) Inlet A	Time (24-h clock) Inlet B	Temperature, F	Operating Voltage, volts	Operating Current, amperes	Notes
14:42	14:43	Not Recorded	3.2	8,000	Started testing.
14:53	14:53		3.2	8,000	Work plated: 1 industrial roll 50 in. long and 6 in. O.D.
15:03	15:03		3.2	8,000	Surface area of part = 6.54 sq. ft.
15:13	15:13		3.2	8,000	Industrial roll is used from 80 to 100 hours and then chromium plated again.
15:23	15:23		3.2	8,000	
15:33	15:33		3.2	8,000	
15:43	15:43		3.2	8,000	
15:45	15:46		3.2	8,000	Stopped testing.

SOURCE SAMPLING PROGRAM
Process Data Sheet

Place: Greensboro Industrial Platers
Date: 3/25/86
Tank No.: 5
Sample type: Total and hexavalent chromium

	Test Run No.	Test Start Time	Test Stop Time
Inlet A:	TE-9A	8:20	9:25
Inlet B:	TE-9B	8:21	9:26

Time (24-h clock) Inlet A	Time (24-h clock) Inlet B	Temperature, F	Operating Voltage, volts	Operating Current, amperes	Notes
8:20	8:21	Not Recorded	6.5	3,700	Started testing.
8:30	8:30		6.5	3,700	Work plated: 2 steel woodworking machine plates 29 in. long and 15 in. wide; one side plated. Surface area of part = 6.04 sq. ft.
8:40	8:40		6.5	3,700	
8:50	8:50		6.5	3,700	
9:00	9:00		6.5	3,700	
9:10	9:10		6.5	3,700	
9:20	9:20		6.5	3,700	
9:25	9:26		6.5	3,700	Stopped testing.

Note: Results of test run No. TE-9B are not included in the test report because the post-test meterbox calibrations were unacceptable. This test run was replaced with test run No. TE-13B.

SOURCE SAMPLING PROGRAM
Process Data Sheet

Place: Greensboro Industrial Platers
Date: 3/25/86
Tank No.: 5
Sample type: Total and hexavalent chromium

	Test Run No.	Test Start Time	Test Stop Time
Inlet A:	TE-10A	10:16	11:19
Inlet B:	TE-10B	10:17	11:20

Time (24-h clock) Inlet A	Time (24-h clock) Inlet B	Temperature, F	Operating Voltage, volts	Operating Current, amperes	Notes
10:16	10:17	Not Recorded	3.0	2,100	Started testing.
10:26	10:26		3.0	2,100	Work plated: 4 rods.
10:36	10:36		3.0	2,100	
10:46	10:46		3.0	1,700	
10:56	10:56		3.0	1,700	
11:06	11:06		3.0	1,700	
11:16	11:16		3.0	1,700	
11:19	11:20		3.0	1,700	Stopped testing.

Note: Results of test run No. TE-10B are not included in the test report because the post-test meterbox calibrations were unacceptable. This test run was replaced with test run No. TE-14B.

SOURCE SAMPLING PROGRAM
Process Data Sheet

Place: Greensboro Industrial Platers
Date: 3/25/86
Tank No.: 5
Sample type: Total and hexavalent chromium

	Test Run No.	Test Start Time	Test Stop Time
Inlet A:	TE-11A	13:32	14:36
Inlet B:	TE-11B	13:33	14:37

Time (24-h clock) Inlet A	Time (24-h clock) Inlet B	Temperature, F	Operating Voltage, volts	Operating Current, amperes	Notes
13:32	13:33	Not Recorded	2.5	1,300	Started testing.
13:42	13:42		2.5	1,300	Work plated: 1 steel cylinder 3 ft. 4 in. long and 4.5 in. O.D.
13:52	13:52		2.5	1,300	Surface area of cylinder = 3.93 sq. ft.
14:02	14:02		2.5	1,300	
14:12	14:12		2.5	1,300	
14:22	14:22		2.5	1,300	
14:32	14:32		2.5	1,300	
14:36	14:37		2.5	1,300	Stopped testing.

SOURCE SAMPLING PROGRAM
Process Data Sheet

Place: Greensboro Industrial Platers
Date: 3/25/86
Tank No.: 5
Sample type: Total and hexavalent chromium

	Test Run No.	Test Start Time	Test Stop Time
Inlet A:	TE-12A	15:11	16:16
Inlet B:	TE-12B	15:12	16:17

Time (24-h clock) Inlet A	Time (24-h clock) Inlet B	Temperature, F	Operating Voltage, volts	Operating Current, amperes	Notes
15:11	15:12	Not Recorded	3.0	1,600	Started testing.
15:21	15:21		3.0	1,600	Work plated: 1 steel industrial roll 6 ft. 6 in. long and 4 in. O.D.
15:31	15:31		3.0	1,600	Surface area of cylinder = 6.81 sq. ft.
15:41	15:41		3.0	1,600	
15:51	15:51		3.0	1,600	
16:01	16:01		3.0	1,600	
16:11	16:11		3.0	1,600	
16:16	16:17		3.0	1,600	Stopped testing.

SOURCE SAMPLING PROGRAM
Process Data Sheet

Place: Greensboro Industrial Platers
Date: 3/26/86
Tank No.: 5
Sample type: Total and hexavalent chromium

	Test Run No.	Test Start Time	Test Stop Time
Inlet A:	TE-13A	8:29	9:49
Inlet B:	TE-13B	8:30	9:50

Time (24-h clock) Inlet A	Time (24-h clock) Inlet B	Temperature, F	Operating Voltage, volts	Operating Current, amperes	Notes
8:29	8:30	Not Recorded	2.6	800	Started testing.
8:39	8:39		2.6	800	Work plated: 1 part 52 in. long and 6 in. wide; one side plated. Surface area of part = 2.17 sq. ft.
8:49	8:49		2.6	800	
8:59	8:59		2.6	900	
9:09	9:09		2.6	900	
9:19	9:19		2.6	900	
9:29	9:29		2.6	900	
9:39	9:39		2.6	900	
9:49	9:50		2.6	900	Stopped testing.

SOURCE SAMPLING PROGRAM
Process Data Sheet

Place: Greensboro Industrial Platers
Date: 3/26/86
Tank No.: 5
Sample type: Total and hexavalent chromium

	Test Run No.	Test Start Time	Test Stop Time
Inlet A:	TE-14A	10:22	11:27
Inlet B:	TE-14B	10:23	11:28

Time (24-h clock) Inlet A	Time (24-h clock) Inlet B	Temperature, F	Operating Voltage, volts	Operating Current, amperes	Notes
10:22	10:23	Not Recorded	2.6	900	Started testing. Work plated: 1 part 52 in. long and 6 in. wide; one side plated. Surface area of part = 2.17 sq. ft.
10:32	10:32		2.6	900	
10:42	10:42		2.6	900	
10:52	10:52		2.6	900	
11:02	11:02		2.6	900	
11:12	11:12		2.6	900	
11:22	11:22		2.6	900	Stopped testing.
11:27	11:28				

SOURCE SAMPLING PROGRAM
Process Data Sheet

Place: Greensboro Industrial Platers
Date: 3/26/86
Tank No.: 6
Sample type: Total and hexavalent chromium

Test Run No.
Inlet A: MD-5A
Outlet B: MD-5B

Test Start Time
Inlet A: 8:31
Outlet B: 8:34

Test Stop Time
Inlet A: 10:54
Outlet B: 10:55

Time (24-h clock) Outlet A	Time (24-h clock) Outlet B	Temperature, F	Operating Voltage, volts	Operating Current, amperes	Pressure Drop, in. w. c.	Notes
8:31	8:34	145	6.5	2,400	0.8	Started testing.
8:35	8:35	145	6.5	2,400	0.9	Work plated: 1 cylinder 108 in. long and 5 in. O.D. Surface area of rods = 11.78 sq. ft.
8:45	8:45	140	6.5	2,400	0.8	
8:55	8:55	140	6.5	2,400	0.8	
9:05	9:05	140	6.5	2,300	0.8	
9:15	9:15	140	6.3	2,200	0.8	
9:25	9:25	140	6.2	2,200	0.8	
9:35	9:35	140	6.2	2,300	0.8	
9:38	9:38	140	6.2	2,300	0.8	Stopped testing.
9:55	9:55	140	6.2	4,000	1.0	Started testing.
10:05	10:05	135	6.2	3,900	0.9	Work plated: 4 pipes 216 in. long and 1.18 in. O.D. Surface area of rods = 22.24 sq. ft.
10:15	10:15	135	6.2	3,900	0.8	
10:25	10:25	135	6.2	4,000	0.8	
10:35	10:35	135	6.2	4,000	0.8	
10:45	10:45	135	6.2	4,000	0.8	
10:54	10:55	135	6.2	4,000	0.8	Stopped testing.

SOURCE SAMPLING PROGRAM
Process Data Sheet

Place: Greensboro Industrial Platers
Date: 3/26/86
Tank No.: 6
Sample type: Total and hexavalent chromium

Test Run No.
Inlet A: MO-6A
Outlet B: MO-6B

Test Start Time
Inlet A: 11:50
Outlet B: 11:51

Test Stop Time
Inlet A: 13:56
Outlet B: 13:57

Time (24-h clock) Outlet A	Time (24-h clock) Outlet B	Temperature, F	Operating Voltage, volts	Operating Current, amperes	Pressure Drop, in. w. c.	Notes
11:50	11:51	135	6.5	2,200	0.8	Started testing.
11:55	11:55	135	6.2	2,200	0.8	Work plated: Reeds approximately 160 in. long.
12:05	12:05	135	6.3	2,200	0.8	
12:15	12:15	135	6.2	2,200	0.8	
12:25	12:25	135	5.5	2,200	0.8	
12:35	12:35	130	5.5	1,800	0.8	
12:45	12:45	135	5.5	1,700	0.9	
12:55	12:55	135	5.5	1,700	0.8	
13:05	13:05	135	5.5	1,700	0.8	
13:15	13:15	130	5.5	1,700	0.8	
13:25	13:25	130	5.5	1,600	0.8	
13:35	13:35	130	5.5	1,400	0.8	
13:45	13:45	130	5.5	1,400	0.8	
13:55	13:55	130	5.5	1,400	0.8	
13:56	13:57	130	5.5	1,400	0.8	Stopped testing.

SOURCE SAMPLING PROGRAM
Process Data Sheet

Place: Greensboro Industrial Platers
Date: 3/26/86
Tank No.: 6
Sample type: Total and hexavalent chromium

Test Run No.
Inlet A: MO-7A
Outlet B: MO-7B

Test Start Time
Inlet A: 14:08
Outlet B: 14:09

Test Stop Time
Inlet A: 16:28
Outlet B: 16:29

Time (24-h clock) Outlet A	Time (24-h clock) Outlet B	Temperature, F	Operating Voltage, volts	Operating Current, amperes	Pressure Drop, in. w. c.	Notes
14:08	14:09	130	6.5	3,800	0.8	Started testing.
14:10	14:10	130	6.5	3,800	0.8	Work plated: 4 parts 214 in. long and 1.18 in. O.D. Surface area of parts = 22.04 sq. ft.
14:20	14:20	130	6.5	3,800	0.8	
14:30	14:30	130	6.5	3,800	0.8	
14:40	14:40	130	6.5	3,800	0.8	
14:50	14:50	130	6.5	3,800	0.8	
15:00	15:00	130	6.5	3,700	0.8	Stopped testing.
15:30	15:30	125	6.5	3,800	0.8	Started testing.
15:40	15:40	125	6.5	3,800	0.8	
15:50	15:50	125	6.5	3,800	0.8	
16:00	16:00	125	6.5	3,800	0.8	
16:10	16:10	125	6.5	3,800	0.8	
16:20	16:20	125	6.5	3,800	0.8	
16:28	16:29	125	6.5	3,800	0.8	Stopped testing.

APPENDIX F

TEST PARTICIPANTS AND OBSERVERS

TEST PARTICIPANTS AND OBSERVERS

Name	Organization	Responsibility
Barry Rudd	Entropy Environmentalists, Inc.	Field Coordinator
Frank Phoenix	Entropy Environmentalists, Inc.	Field Coordinator
Willis Nesbit	Entropy Environmentalists, Inc.	Sampling Team Leader
Dwain Ritchie	Entropy Environmentalists, Inc.	Sampling Team Leader
Steve Terll	Entropy Environmentalists, Inc.	Sampling Team Leader
Chris Franklin	Entropy Environmentalists, Inc.	Engineering Technician
Robert Bridges	Entropy Environmentalists, Inc.	Engineering Technician
Hung Dang	Entropy Environmentalists, Inc.	Engineering Technician
Bill DeWess	Entropy Environmentalists, Inc.	Quality Assurance Observer
Randy Strait	Midwest Research Institute	Process Operation Observer
Frank Clay	EPA, Emission Measurement Branch	EPA Task Manager
Ron Myers	EPA, Industrial Studies Branch	EPA Task Manager
Robert Hester	Greensboro Industrial Platers	Facility Contact