Note: This is a reference cited in *AP 42, Compilation of Air Pollutant Emission Factors, Volume I Stationary Point and Area Sources.* AP42 is located on the EPA web site at www.epa.gov/ttn/chief/ap42/

The file name refers to the reference number, the AP42 chapter and section. The file name "ref02_c01s02.pdf" would mean the reference is from AP42 chapter 1 section 2. The reference may be from a previous version of the section and no longer cited. The primary source should always be checked.

Background Report Reference

AP-42 Section Number: 12.20

Background Chapter: 4

Reference Number: 55

Title: Inlet and Outlet of Scrubber at Standard Nickel Chromium Plating Company, Total and Hexavalent Chromium

Truesdail Laboratories

December 1986

REPORT

DUPLICATE ELECTROPLATING

REF. 4-55

TRUESDAIL LABORATORIES, INC.

#9

CHEMISTS - MICROBIOLOGISTS - ENGINEERS

RESEARCH — DEVELOPMENT — TESTING

14201
TUSTIN,
AREA CO
AREA CODE 213 • 225-1564
CABLE: TRUELABS

CLIENT Dames and Moore
222 E. Annapamu
Santa Barbara, CA 93101
Attention: Matt Dunn

DATE Dec. 17, 1986

RECEIVED Nov. 4, 1986

SAMPLE

LABORATORY NO. 17226

INVESTIGATION Inlet and outlet of Scrubber at Standard Nickel Chromium Plating Co.
P.O. #Verbal MD

Total and Hexavalent Chromium

RESULTS

On November 6, 1986 representatives of Truesdail Laboratories, Inc., conducted tests to determine the total chromium and hexavalent chromium removal efficiency of a scrubber serving a plating operation at the Standard Nickel Chromium Plating Company plant in Los Angeles, California. Duplicate tests were conducted at the inlet and outlet of the scrubber simultaneously.

The sampling train consisted of a glass sampling probe connected with Teflon tubing to a set of Greenburg-Smith impingers charged with 200 mls of distilled water and followed by a glass fiber backup filter, a vacuum pump, and a dry gas meter. Each scrubber outlet sample was collected isokinetically for 4 minutes at each of 16 traverse points in the duct. Each scrubber inlet sample was collected isokinetically for 10 minutes at each of 6 traverse points along one diameter of the duct. At each sampling location, a minimum 30-minute integrated sample of the flue gas was collected with an evacuated 8-liter stainless steel cylinder.

The flue gas flow rate was determined at both the inlet and outlet of the scrubber by measuring the average velocity head with an S-type Pitot tube and a Magnehelic differential pressure gage, and by measuring the average temperature with a Chromel-Alumel thermocouple and a Micromite potentiometer.

The sample collections were analyzed for total chromium by inductively couple plasma emission spectroscopy (ICP), and for hexavalent chromium (Cr^{+6}) by the diphenylcarbazide colorimetric method. The sample solutions and filters were kept refrigerated until analysis.

This report applies only to the sample, or samples, investigated and is not necessarily indicative of the quality or condition of apparently identical or similar products. As a mutual protection to clients, the public and these Laboratories, this report is submitted and accepted for the exclusive use of the client to whom it is addressed and upon the condition that it is not to be used, in whole or in part, in any advertising or publicity matter without prior written authorization from these Laboratories.

[illegible] were analyzed for carbon dioxide (CO_2) and [illegible]

Samples [illegible] test period and analyzed for chromium as mentioned above.

The [illegible] as follows:

STANDARD NICKEL CHROMIUM PLATING CO.
11-6-36

Flue Gas:	Scrubber Inlet	Scrubber Outlet
Temperature, °F	65.	66.
Static Pressure, in. H_2O	-1.0	-0.03
Velocity, ft/sec	37.8	21.7
Flue Diameter, in.	20.	23 X 23
Flue Area, sq. ft.	2.18	3.67
Flow Rate, ACFM	4950.	4770.
, SCFM	4870.	4700.
, DSCFM	4770.	4580.
Moisture, % by vol.	2.1	2.5

Chromium:	Scrubber Inlet		Scrubber Outlet	
Test No.:	1	2	1	2
Sample Time:	(09:32-10:32)	(12:12-13:16)	(09:32-10:42)	(12:12-13:22)
Sample Volume, DSCF	28.47	29.08	27.02	26.79
Concentration				
Total Cr				
PPMV	0.05	0.03	<0.01	0.02
mg/m^3	0.10	0.06	<0.01	0.05
Cr^{+6}				
PPMV	0.02	0.03	<0.01	0.01
mg/m^3	0.05	0.07	<0.01	0.03
Emission Rate, lbs/hr				
Total Cr	0.002	0.001	<0.001	0.001
Cr^{+6}	0.001	0.001	<0.001	<0.001

Scrubber Water				
Chromium, mg/l				
Total Cr	14.	11.	---	---
Cr^{+6}	15.	9.	---	---

Gas Analysis				
CO_2, %	0.0	0.0	0.0	0.0
O_2, %	21.2	20.6	21.1	20.9

Respectfully submitted,

TRUESDAIL LABORATORIES, INC.

S. Hugh Brown

S. Hugh Brown, Supervisor
Air Pollution Testing

APPENDIX

Test No.: INLET

Barometric Pressure: 29.81

	Point	Vel. Head H_2O"	Temp. °F	Velocity ft/sec	Point	Vel. Head H_2O"	Temp. °F	Velocity ft/sec	Point	Vel. Head H_2O"	Temp. °F	Velocity ft/sec
6.7	1	0.39	64	41.58	1	0.19	65	29.65				
8.1	2	0.40	64	42.11	2	0.26	68	33.99				
9.9	3	0.38	64	41.05	3	0.27	65	34.63				
12.5	4	0.30	64	36.47	4	0.38		41.09				
19.5	5	0.38	64	41.05	5	0.24		32.65				
22.1	6	0.42	65	43.26	6	0.25		33.33				
23.9	7	0.43	65	43.71	7	0.27		34.63				
25.3	8	0.38	65	41.09	8	0.25		33.33				

0.9417

A. AVERAGE VELOCITY (TRAVERSE) ft/sec Excluded 37.69

B. REFERENCE POINT VELOCITY (TRAVERSE) ft/sec

C. AVERAGE VELOCITY (REFERENCE PT.) ft/sec

D. FLUE FACTOR C/B

E. PITOT TUBE CORRECTION FACTOR 1.0

F. GAS DENSITY CORRECTION FACTOR 1.003

G. CORRECTED VELOCITY, AxExF, ft/sec 37.80
or, AxDxExF, ft/sec

H. AREA OF FLUE, SQ. FT. 2.18

J. AVERAGE FLUE TEMPERATURE, °F 65

K. FLOW RATE, G x H x 60, CFM 4945

L. FLOW RATE, $K \times \frac{520}{460 + J} \times \frac{BP + Ps/13.6}{29.9}$, SCFM 4871

M. FLOW RATE, L x MOISTURE CORR., DSCFM 4769

0.979

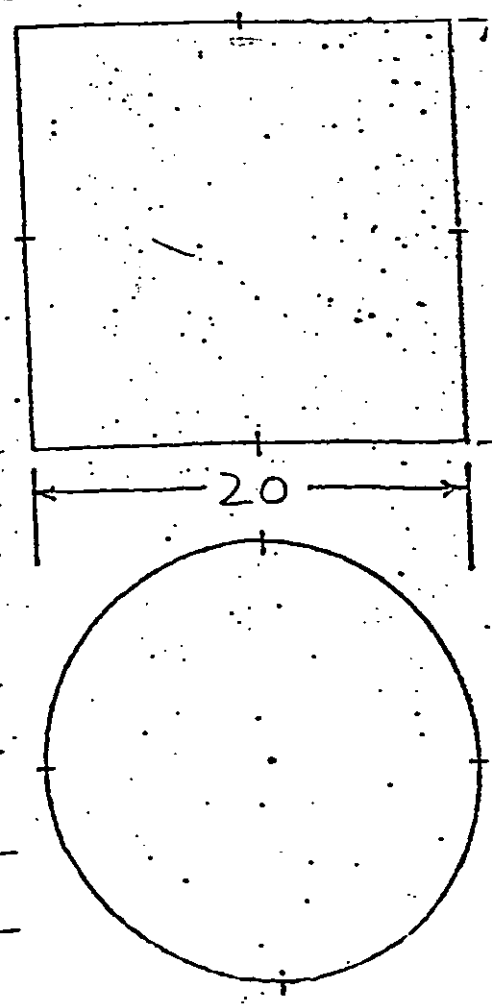

Sampling Location: DANES & MORE

Barometric Pressure: 29.81

Test No. INLET T-1

Nozzle Diameter: 3/16"

Time	Gas Meter Reading cu. ft. V_m	Gas Meter Press. "H_2O P_m	Gas Meter Temp. °F T_m	Impinger Temp °F T_i	Sample Point	CFM			
9:32	42.18	.34			7	.50			
9:37	44.54	.34	64	43					
9:42	47.01	.33	64	45	6	.49			
9:47	49.60	.33	64	46					
9:52	52.10	.33	64	44	5	.49			
9:57	54.54	.33	64	44					
10:02	57.10	.33	64	45	4	.47			
10:07	59.46	.29	64	44					
10:12	61.80	.27	65	46	3	.47			
10:17	64.20	.27	65	48					
10:22	66.52	.27	66	48	2	.45			
10:27	68.90	.28	66	47					
10:32	71.30	.28	66	46					
	29.12	.31	65	46					

METER 004

Weight Collected, grams

A. Total Weight

B. Condensate Volume, ml. 4

C. Condensate Vapor Volume, $0.00267 \times \frac{460 + T_m}{B.P. + P_m/13.6} \times B$, cu. ft. .19

D. Total Sample Volume, $V_m + C$, cu. ft. 29.31

E. Sample Volume, $D \times \frac{520}{460 + T_m} \times \frac{B.P. + P_m/13.6}{29.9} \times$ Moisture corr. (0.983), DSCF 28.47

F. Concentration, 15.43 x A/E, grains/DSCF

G. Stack Gas Flow Rate, DSCFM

H. Emissions, 60 x G x F/7000, lbs/hr

Sampling Station DAMES & MOORE INT-1 Date 11/6/86

WATER VAPOR AND GAS DENSITY CALCULATIONS

Percent Water Vapor in Gases

A. Gas pressure at meter, In. Hg. (Absolute) 29.83

B. Vapor pressure of water at impinger temp., In. Hg. .3120

C. Volume of metered gas, Cu. Ft. 29.12

D. Volume of water vapor metered, B X C/A, Cu. Ft. .30

E. Volume of water vapor condensed, Cu. Ft. .19

F. Total volume of water vapor in gas sample, D+E, Cu. Ft. .49

G. Total volume of gas sample, C+E, Cu. Ft. 29.31

H. Percent water vapor in sampled gas, 100 X F/G 1.671

Gas Density Correction Factor

Component	Volume Percent/100	x Moisture Correction	x Mol. Wt.	= Wt./Mole Wet Basis
Water	.017	1.0	18.0	0.306
Carbon Dioxide	0 Dry Basis	.983	44.0	0
Carbon Monoxide	— Dry Basis		28.0	—
Oxygen	0.212 Dry Basis		32.0	6.669
Nitrogen & Inerts	0.788 Dry Basis		28.2	21.844
			Average Molecular Weight	28.819

J. Density of gas referred to air = $\frac{\text{Av. Mol. Wt.}}{28.95}$ = 0.995

K. Gas density correction factor = $\sqrt{\frac{1.00}{J}}$ = 1.002

ESDAIL LABORATORIES, INC.

Date: [illegible]

Sampling Location: INLET DANE & MORE

Barometric Pressure: 29.81

Test No. T-2 INLET

Nozzle Diameter: 3/16"

80.18
78.68
.40

Time	Gas Meter Reading cu. ft. V_m	Gas Meter Press. "H_2O P_m	Gas Meter Temp. °F T_m	Impinger Temp °F T_i	Sample Point	CFM			
1212	71.38	.27	—	—	2	.48			
1221	73.58	.33	65	42					
1226	76.10	.33	66	43	3	.47			
1231	78.68	.33	66	43					
1236	80.18	.32	66	43	4	.47			
1241	83.51	.33	67	43					
1246	86.14	.32	67	45	5	.49			
1251	88.64	.32	68	45					
1256	91.12	.30	68	43	6	.49			
1301	93.52	.32	68	43					
1306	96.12	.33	68	42	7	.50			
1311	98.64	.32	68	43.5					
1316	101.20	.33	68	43					
	29.82	.32	67	43					

METER 004

Weight Collected, grams

A. Total Weight _____

B. Condensate Volume, ml. 10

C. Condensate Vapor Volume, $0.00267 \times \frac{460 + T_m}{B.P. + P_m/13.6} \times B$, cu. ft. .47

D. Total Sample Volume, $V_m + C$, cu. ft. 30.29

E. Sample Volume, $D \times \frac{520}{460 + T_m} \times \frac{B.P. + P_m/13.6}{29.9} \times$ Moisture corr., DSCF 29.08 (0.975)

F. Concentration, 15.43 x A/E, grains/DSCF _____

G. Stack Gas Flow Rate, DSCFM _____

H. Emissions, 60 x G x F/7000, lbs/hr _____

19

Sampling Station DAMES + MOORE INLET T-2 Date 11/6/86

WATER VAPOR AND GAS DENSITY CALCULATIONS

Percent Water Vapor in Gases

A. Gas pressure at meter, In. Hg. (Absolute) 29.83

B. Vapor pressure of water at impinger temp., In. Hg. .2782

C. Volume of metered gas, Cu. Ft. 29.82

D. Volume of water vapor metered, B X C/A, Cu. Ft. .28

E. Volume of water vapor condensed, Cu. Ft. .47

F. Total volume of water vapor in gas sample, D+E, Cu. Ft. .75

G. Total volume of gas sample, C+E, Cu. Ft. 30.29

H. Percent water vapor in sampled gas, 100 X F/G 2.48

Gas Density Correction Factor

Component	Volume Percent/100	x Moisture Correction	x Mol. Wt.	= Wt./Mole Wet Basis
Water	.025	1.0	18.0	0.450
Carbon Dioxide	0 Dry Basis	.975	44.0	0
Carbon Monoxide	Dry Basis	↓	28.0	—
Oxygen	0.206 Dry Basis	↓	32.0	6.427
Nitrogen & Inerts	0.794 Dry Basis	↓	28.2	21.831
			Average Molecular Weight	28.708

J. Density of gas referred to air = $\frac{\text{Av. Mol. Wt.}}{28.95}$ = 0.992

K. Gas density correction factor = $\sqrt{\frac{1.00}{J}}$ = 1.004

Laboratory No. _____

EPA 25 - FIELD TEST DATA

Plant DANES & MORE

Sampling Site INLET

Date 11/6/86

Test No. 1

Burner Temp. _____

Sampling Time	Tank I.D. AS Vacuum Tank A	Tank I.D. Vacuum Tank B
START 9:34	30	
9:39	26	
9:44	21	
9:49	15	
9:54	10	
9:59	5	
10:04	3	

TRUESDAIL LABORATORIES, INC.

Laboratory No. _____

EPA 25 - FIELD TEST DATA

Plant DANE & MORE

Sampling Site INLET T-2

Date 11/6/86

Test No. 2

Burner Temp. _____

Sampling Time	Tank I.D. BC Vacuum Tank A	Tank I.D. Vacuum Tank B
12:12	30	
12:17	23	
12:22	22	
12:27	10	
12:32	6	
12:37	3	
12:42	0	

Test No.: OUTLET

Barometric Pressure: 29.81

	Point	Vel. Head H_2O''	Temp. °F	Velocity ft/sec	Point	Vel. Head H_2O''	Temp. °F	Velocity ft/sec	Point	Vel. Head H_2O''	Temp. °F	Velocity ft/sec
2.9	1	0.14	66	24.93	1	0.13	66	24.03	1	0.08	66	18.85
8.7	2	0.18		28.27	2	0.18		28.27	2	0.13		24.63
14.5	3	0.14		24.93	3	0.20		29.80	3	0.12		23.08
20.3	4	0.15		25.81	4	0.19		29.05	4	0.12		23.08
	1	0.02	66	9.42								
	2	0.03		11.54								
	3	0.25		10.54								
	4	0.02		9.42								

0.9406

E included

A. AVERAGE VELOCITY (TRAVERSE) ft/sec 21.57

B. REFERENCE POINT VELOCITY (TRAVERSE) ft/sec

C. AVERAGE VELOCITY (REFERENCE PT.) ft/sec

D. FLUE FACTOR C/B

E. PITOT TUBE CORRECTION FACTOR 1.0

F. GAS DENSITY CORRECTION FACTOR 1.004

G. CORRECTED VELOCITY, AxExF, ft/sec 21.66
or, AxDxExF, ft/sec

H. AREA OF FLUE, SQ. FT. 3.67

J. AVERAGE FLUE TEMPERATURE, °F 66

K. FLOW RATE, G x H x 60, CFM 4770

L. FLOW RATE, $K \times \frac{520}{460 + J} \times \frac{BP + Ps/13.6}{29.9}$, SCFM 4701

M. FLOW RATE, L x MOISTURE CORR., DSCFM 4523

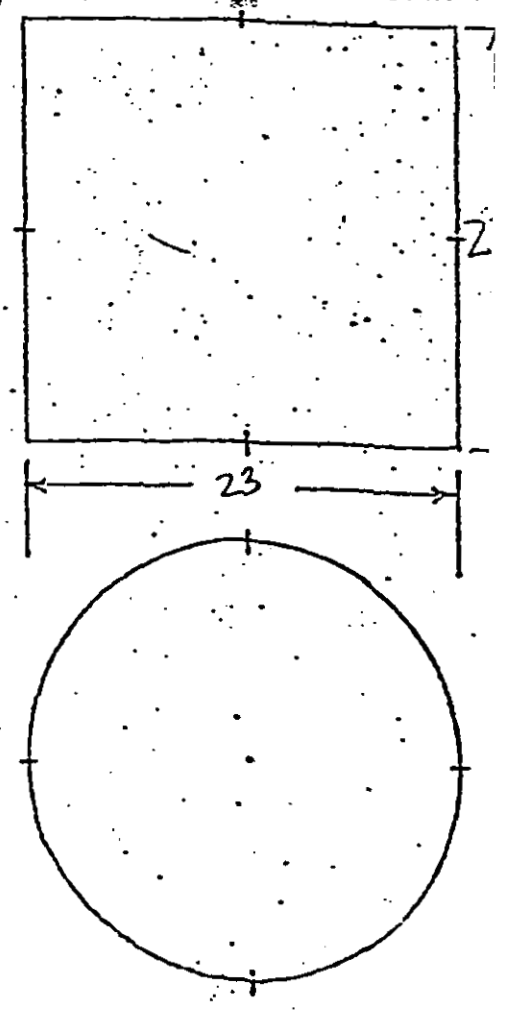

ESDAIL LABORATORIES, INC.

Date: 11/6/86

Sampling Location: Dames + Moore

Barometric Pressure: 29.81

Test No. Outlet T-1

Nozzle Diameter: 1/4"

	Time	Gas Meter Reading cu. ft. V_m	Gas Meter Press. "H_2O P_m	Gas Meter Temp. °F T_m	Impinger Temp °F T_i	Sample Point	CFM		G.D. TANK	
0	0932	93.48	0.03	–	–	4-1	0.19		30	
4		94.24	0.04	63	43	4-2	0.23			
8		95.16	0.03	63	43	4-3	0.21		25	
12		96.00	0.03	63	43	4-4	0.19			
16		96.76	0.15	63	44	3-1	0.38		20	
20		98.28	0.20	64	44	3-2	0.48			
24		100.20	0.20	64	45	3-3	0.46		15	
28		102.04	0.20	64	45	3-4	0.46			
32		103.88	0.20	65	45	2-1	0.48		10	
36		105.72	0.35	65	46	2-2	0.57			
40		108.00	0.39	65	47	2-3	0.60		7	
44		110.40	0.39	66	47	2-4	0.59			
48		112.76	0.20	66	46	1-1	0.50		4	
52		114.76	0.35	66	46	1-2	0.57			
56		117.04	0.20	66	46	1-3	0.50		2	
60		119.04	0.22	66	46	1-4	0.52			
64	1042	121.12							0	
		27.64	.20	65	45					

$M_t = 0.991$

Weight Collected, grams

TARE = 0.1252

A. Total Weight

B. Condensate Volume, ml. 8

C. Condensate Vapor Volume, $0.00267 \times \frac{460 + T_m}{B.P. + P_m/13.6} \times B$, cu. ft. .38

D. Total Sample Volume, $V_m + C$, cu. ft. 28.02

E. Sample Volume, $D \times \frac{520}{460 + T_m} \times \frac{B.P. + P_m/13.6}{29.9} \times$ Moisture corr. 0.976, DSCF 27.02

F. Concentration, 15.43 x A/E, grains/DSCF

G. Stack Gas Flow Rate, DSCFM

H. Emissions, 60 x G x F/7000, lbs/hr

11-18

Sampling Station DAMES & MOORE OUT T-1 Date 11-6-86

WATER VAPOR AND GAS DENSITY CALCULATIONS

Percent Water Vapor in Gases

A. Gas pressure at meter, In. Hg. (Absolute) 29.82

B. Vapor pressure of water at impinger temp., In. Hg. .3004

C. Volume of metered gas, Cu. Ft. 27.64

D. Volume of water vapor metered, B X C/A, Cu. Ft. .28

E. Volume of water vapor condensed, Cu. Ft. .38

F. Total volume of water vapor in gas sample, D+E, Cu. Ft. .66

G. Total volume of gas sample, C+E, Cu. Ft. 28.02

H. Percent water vapor in sampled gas, 100 X F/G 2.36

Gas Density Correction Factor

Component	Volume Percent/100	x Moisture Correction	x Mol. Wt.	= Wt./Mole Wet Basis
Water	.024	1.0	18.0	0.432
Carbon Dioxide	0 Dry Basis	.976	44.0	0
Carbon Monoxide	— Dry Basis		28.0	—
Oxygen	0.211 Dry Basis		32.0	6.590
Nitrogen & Inerts	0.789 Dry Basis		28.2	21.716
			Average Molecular Weight	28.738

J. Density of gas referred to air = $\frac{\text{Av. Mol. Wt.}}{28.95}$ = 0.993

K. Gas density correction factor = $\sqrt{\frac{1.00}{J}}$ = 1.004

ESPAIL LABORATORIES, INC.

Date: 11/6/86

Sampling Location: Dames + Moore

Barometric Pressure: 29.81

Test No. Out T-2

Nozzle Diameter: 1/4"

	Time	Gas Meter Reading cu. ft. V_m	Gas Meter Press. "H_2O P_m	Gas Meter Temp. °F T_m	Impinger Temp °F T_i	Sample Point	CFM		CO Tank	
0	1212	21.25	0.03	—	—	4-1	0.19		30	
4		22.01	0.04	65	44	4-2	0.23			
8		22.93	0.03	65	44	4-3	0.21		25	
12		23.77	0.03	65	44	4-4	0.15			
16		24.53	0.15	65	44	3-1	0.38		20	
20		26.05	0.20	66	46	3-2	0.48			
24		27.97	0.20	66	48	3-3	0.46		15	
28		29.81	0.20	66	46	3-4	0.46			
32		31.65	0.20	66	44	2-1	0.48		10	
36		33.57	0.35	66	44	2-2	0.57			
40		35.45	0.39	66	45	2-3	0.60		9	
44		38.25	0.39	66	46	2-4	0.59			
48		40.61	0.20	66	46	1-1	0.50		4	
52		42.61	0.35	67	46	1-2	0.57			
56		44.89	0.20	67	47	1-3	0.50		0	
60		46.89	0.22	66	47	1-4	0.52			
64	1322	48.70								
		27.45	.20	66	45					

Mf = 0.99

Weight Collected, grams

Tare 01039

A. Total Weight

B. Condensate Volume, ml. 10

C. Condensate Vapor Volume, $0.00267 \times \frac{460 + T_m}{B.P. + P_m/13.6} \times B$, cu. ft. .47

D. Total Sample Volume, $V_m + C$, cu. ft. 27.92

E. Sample Volume, $D \times \frac{520}{460 + T_m} \times \frac{B.P. + P_m/13.6}{29.9} \times$ Moisture corr., DSCF 26.79

F. Concentration, 15.43 x A/E, grains/DSCF

G. Stack Gas Flow Rate, DSCFM

H. Emissions, 60 x G x F/7000, lbs/hr

11-18

Sampling Station DAMES & MOORE OUT T-2 Date 11/6/86

WATER VAPOR AND GAS DENSITY CALCULATIONS

Percent Water Vapor in Gases

A. Gas pressure at meter, In. Hg. (Absolute) 29.82

B. Vapor pressure of water at impinger temp., In. Hg. .3004

C. Volume of metered gas, Cu. Ft. 27.45

D. Volume of water vapor metered, B X C/A, Cu. Ft. .28

E. Volume of water vapor condensed, Cu. Ft. .47

F. Total volume of water vapor in gas sample, D+E, Cu. Ft. .75

G. Total volume of gas sample, C+E, Cu. Ft. 27.92

H. Percent water vapor in sampled gas, 100 X F/G 2.69

Gas Density Correction Factor

Component	Volume Percent/100	x Moisture Correction	x Mol. Wt.	= Wt./Mole Wet Basis
Water	.027	1.0	18.0	0.486
Carbon Dioxide	0 Dry Basis	.973	44.0	0
Carbon Monoxide	— Dry Basis	↓	28.0	—
Oxygen	.209 Dry Basis	↓	32.0	6.507
Nitrogen & Inerts	0.791 Dry Basis	↓	28.2	21.704
			Average Molecular Weight	28.697

J. Density of gas referred to air = $\frac{\text{Av. Mol. Wt.}}{28.95}$ = 0.991

K. Gas density correction factor = $\sqrt{\frac{1.00}{J}}$ = 1.004