NOONAN

EPA-450/2-77-012

Note: This is a reference cited in *AP 42, Compilation of Air Pollutant Emission Factors, Volume I Stationary Point and Area Sources.* AP42 is located on the EPA web site at www.epa.gov/ttn/chief/ap42/

The file name refers to the reference number, the AP42 chapter and section. The file name "ref02_c01s02.pdf" would mean the reference is from AP42 chapter 1 section 2. The reference may be from a previous version of the section and no longer cited. The primary source should always be checked.

CONTROL TECHNIQUES FOR LEAD AIR EMISSIONS VOLUME I: CHAPTERS 1 - 3

UNITED STATES ENVIRONMENTAL PROTECTION AGENCY
Office of Air Quality Planning and Standards
Emission Standards and Engineering Division
Research Triangle Park, North Carolina 27711
Telephone: (919) 541-5271

December 1977

EPA-450/2-77-012

CONTROL TECHNIQUES FOR LEAD AIR EMISSIONS

VOLUME I: CHAPTERS 1 - 3

U.S. ENVIRONMENTAL PROTECTION AGENCY
Office of Air and Waste Management
Office of Air Quality Planning and Standards
Research Triangle Park, North Carolina 27711

December 1977

NATIONAL AIR POLLUTION CONTROL TECHNIQUES ADVISORY COMMITTEE

Chairman and Executive Secretary

Mr. Don R. Goodwin, Director
Emission Standards and Engineering Division
Office of Air Quality Planning and Standards
U.S. Environmental Protection Agency
Research Triangle Park, North Carolina 27711

Committee Members

Dr. Lucile F. Adamson
1344 Ingraham Street, N.W.
Washington, D.C. 20011
(Howard University-Professor, School of Human Ecology)

Mr. O.B. Burns, Jr., Director
Corporate Environmental Activities
Westvaco Corporation
Westvaco Building, 299 Park Ave.
New York, New York 10017

Mr. Donald C. Francois, Asst. Dir.
Div. of Natural Resources Management
Dept. of Conservation and Cultural Affairs
P.O. Box 578
St. Thomas, Virgin Islands 00801

Dr. Waldron H. Giles, Manager
Advanced Material and Space Systems Engineering
General Electric Company
Re-entry and Environmental Systems Div.
3198 Chestnut St., Room 6839B
Philadelphia, Pennsylvania 19101

Mr. James K. Hambright, Dir.
Dept. of Environmental Resources
Bureau of Air Quality and Noise Control
P.O. Box 2063
Harrisburg, Pennsylvania 17120

Mr. W.C. Holbrook, Manager
Environmental and Energy Affairs
B.F. Goodrich Chemical Co.
6100 Oak Tree Blvd.
Cleveland, Ohio 44131

Mr. Lee E. Jager, Chief
Air Pollution Control Div.
Michigan Dept. of Natural Resources
Stevens T. Mason Bldg. (8th floor)
Lansing, Michigan 48926

Dr. Joseph T. Ling, Vice Pres.
Environmental Engineering and Pollution Control
3M Company
Minnesota Mining and Manufacturing Co.
Box 33331, Bldg. 42-5W
St. Paul, Minnesota 55133

Mr. Marcus R. McCraven
Asst. Vice Pres. of Environmental Engineering
United Illuminating Co.
80 Temple St.
New Haven, Connecticut 06506

Mrs. Patricia F. McGuire
161 White Oak Dr.
Pittsburgh, Pennsylvania 15237
(Member of the Allegheny Co. Board of Health, Pennsylvania)

Dr. William J. Moroz
Prof. of Mechanical Engineering
Center for Air Environment Studies
226 Chemical Engineering, Bldg. II
Pennsylvania State University
University Park, Pennsylvania 16802

Mr. Hugh Mullen, Director of Government and Industry Relations
I.U. Conversion Systems, Inc.
3624 Market St.
Philadelphia, Pennsylvania 19104

Mr. C. William Simmons
Air Pollution Control Officer
San Diego Air Pollution Control
District
9150 Cheasapeake Dr.
San Diego, California 92123

Mr. E. Bill Stewart, Dept. Dir.
Control and Prevention
Texas Air Control Board
8520 Shoal Creek Blvd.
Austin, Texas 78758

Mr. Victor H. Sussman, Dir.
Stationary Source Environmental
Control Office
Ford Motor Co.
Parklane Towers West, Suite 628
P.O. Box 54
Dearborn, Michigan 48126

TABLE OF CONTENTS

	Page
SUMMARY	xix
1.0 INTRODUCTION	1-1
2.0 BACKGROUND INFORMATION	2-1
2.1 Definitions	2-1
2.2 Origin and Use of Lead	2-4
2.3 Types of Lead Emissions	2-5
2.4 Sampling and Analytical Methods	2-9
2.5 Sources of Lead Emissions	2-10
2.6 Control Devices	2-12
2.7 Fugitive Lead Emissions	2-34
2.8 Control Costs	2-36
2.9 Emission Estimates and Emission Factors	2-42
2.10 Emission Trends and Projections	2-44
2.11 Anticipated Impacts	2-52
2.12 Emergency Episode Procedures	2-58
2.13 References	2-59
3.0 COMBUSTION SOURCES	3-1
3.1 Leaded Gasoline	3-1
3.2 Coal, Oil, Waste Oil, and Solid Waste	3-76

TABLE OF CONTENTS (continued).

		Page
4.0	INDUSTRIAL PROCESS SOURCES	4-1
4.1	Lead Alkyl Manufacture	4-1
4.2	Storage Battery Manufacture	4-23
4.3	Primary Nonferrous Metals Production	4-38
4.4	Secondary Nonferrous Metals and Alloy Production	4-131
4.5	Ferrous Metals and Alloy Production	4-173
4.6	Lead Oxides and Pigments	4-278
4.7	Pesticides	4-291
4.8	Lead Handling Operations	4-292
4.9	Miscellaneous Sources of Lead	
APPENDIX A		A-1
APPENDIX B		B-1

LIST OF FIGURES

		Page
2-1	Approximate Flow of Lead Through U. S. Industry in 1975	2-8
2-2	Map of the Major Lead Emission Sources	2-13
2-3	Criteria for Selection of Gas Cleaning Devices	2-19
2-4	Fabric Filter with Mechanical Shaker	2-21
2-5	Envelope Type Fabric Filter with Automatic Reverse-Air Cleaning Mechanism	2-21
2-6	Reverse-Jet Fabric Filter	2-22
2-7	Orifice Scrubber	2-26
2-8	Orifice Scrubber	2-27
2-9	Mechanical Scrubber	2-27
2-10	Mechanical-Centrifugal Scrubber	2-28
2-11	Centrifugal-Impingement Scrubber	2-31
2-12	Venturi Scrubber Design and Operation	2-32
2-13	Major Design Features of a Common ESP	2-35
2-14	Factors Influencing Capital and Annual Costs of Operating Air Pollution Control System	2-39
3-1	Octane Number Versus Lead Content for Gasolines	3-9
3-2	Yearly Trends of United States Passenger Car Engine Design and Gasoline Quality	3-14
3-3	Historical Source of Octane Quality Commercial Gasolines	3-15
3-4	Percent of Model Year Cars and of all Cars on the Road for Which Premium Gasoline is Recommended, and Percent Premium Sales, 1965-1976	3-17
3-5	United States Gasoline Demand - 1960-1975	3-18
3-6	Vapor Pressure of Lead Compounds	3-32

LIST OF FIGURES (continued)

		Page
3-7	Predicted Reduction in Lead Use in Gasoline From Estimated 1974 Level Based on Federal Fuel Additive Regulations and Gasoline Use Increases of 0 and 5 Percent Per Year	3-40
3-8	Projected Lead Reduction from 1974 Level Resulting From the Use of Nonleaded Fuel in 1975 and Later Model Year Automobiles. Curves C-D are for Resumption of Use of Leaded Fuel at 1974 Concentration for all 1980 and Later Model Years	3-42
3-9	DuPont Muffler Lead Trap	3-48
3-10	Ethyl Corporation Tangential Anchored Vortex Traps Construction Features	3-50
3-11	PPG Particulate Lead Trapping System Features	3-52
3-12	Spreader and Vibrating Grate Stokers	3-78
3-13	Pulverized-Coal Unit	3-79
3-14	Diagram of Coal-Fired Boiler Equipped with an ESP	3-86
3-15	Total Capital and Annualized Costs for ESP's on Coal-Fired Boilers	3-89
3-16	An Oil Front-Fired Power Plant Steam Generator	3-93
3-17	ESP Installation of a Municipal Incinerator Showing Gas Conditioning System	3-99
3-18	Capital Costs for Various Types of Control Devices for Municipal Incinerators	3-109
3-19	Annualized Costs for Various Control Devices on Municipal Incinerators	3-110
4-1	Sodium-Lead Alloy Process for the Production of Tetraethyl Lead	4-3
4-2	Typical Lead Reverberatory Furnace Used in Lead Additive Manufacturing	4-7

LIST OF FIGURES (continued)

		Page
4-3	Electrolytic Process for Tetramethyl Lead Production	4-12
4-4	Flow Diagram of Lead Acid Battery Plant	4-24
4-5	Average Controlled Lead Emissions From Tested Facilities	4-33
4-6	A Typical Ore Mining and Processing Operation	4-41
4-7	Flow Diagram of Primary Lead Smelter	4-45
4-8	Lead Updraft Sintering Machine	4-46
4-9	Lead Blast Furnace	4-49
4-10	Process Flow Diagram For Primary Lead Smelting Showing Potential Industrial Process Fugitive Particulate Emission Points	4-57
4-11	Sulfuric Acid Plant Installed on a Primary Lead Smelter	4-60
4-12	Flow Diagram of Primary Zinc Production	4-73
4-13	Downdraft Sinter Machine	4-76
4-14	Horizontal Retort	4-76
4-15	Vertical Retort	4-80
4-16	Process Flow Diagram For Primary Zinc Production Showing Potential Industrial Process Fugitive Emission Points	4-84
4-17	Primary Copper Smelter Flow Diagram	4-96
4-18	Multiple-Hearth Roaster	4-98
4-19	Fluid-Bed Roaster	4-99
4-20	Reverberatory Furnace	4-103
4-21	Electric Smelting Furnace	4-104
4-22	Copper Converter	4-108

LIST OF FIGURES (continued)

		Page
4-23	Process Flow Diagram for Primary Copper Smelting Showing Potential Industrial Process Fugitive Emission Points	4-113
4-24	Blast Furnace With Typical Air Pollution Control System	4-132
4-25	Reverberatory Furnace with a Typical Emission Control System	4-133
4-26	Pot Furnaces with Typical Emission Control System	4-134
4-27	Process Flow Diagram for Secondary Lead Smelting Showing Potential Industrial Process Fugitive Particulate Emission Points	4-138
4-28	Process Flow Sketch of Brass/Bronze Reverberatory Furnace	4-152
4-29	Brass Reverberatory Furnace	4-154
4-30	Gas-Fired Rotary Brass Melting Furnace	4-155
4-31	Process Flow Diagram for Secondary Brass and Bronze (Copper Alloy) Production Showing Potential Industrial Process Fugitive Particulate Emission Points	4-161
4-32	Production Flow Diagram for a Typical Gray Iron Foundry	4-174
4-33	Cross-Section of a Cupola Furnace for Gray Iron Production	4-175
4-34	Process Flow Diagram for Foundries Showing Potential Industrial Process Fugitive Particulate Emission Points	4-184
4-35	Method of Capturing Exhaust Gases From Cupola Operations	4-189
4-36	Fabric Filter Control System on a Gray Iron Cupola	4-190
4-37	Particulate Emissions as a Function of Venturi Orifice Pressure Drop	4-195

LIST OF FIGURES (continued)

		Page
4-38	Venturi Gas Scrubbing System Installed on a Foundry Cupola	4-196
4-39	Flow Diagram Depicting the Principal Units and Auxiliaries in Modern Blast-Furnace Plant	4-203
4-40	Idealized Cross-Section of a Typical Modern Blast-Furnace Plant	4-205
4-41	Diagram which Illustrates the Principal Parts of an Open-Hearth Furnace	4-207
4-42	Diagrammatic Section Along the Length of a Liquid-Fuel Fired Open-Hearth Furnace	4-208
4-43	Schematic Elevation Showing the Principal Operating Units of the Basic Oxygen Process Steelmaking Shop	4-210
4-44	Schematic Cross-Section of a Heroult Electric Arc Furnace	4-212
4-45	Process Flow Diagram for Iron Production Showing Potential Industrial Process Fugitive Particulate Emission Points	4-222
4-46	Ferroalloy Production Flow Diagram	4-256
4-47	Submerged-Arc Furnace for Ferroalloy Production	4-257
4-48	Ball Mill Process for Lead Oxide Manufacture	4-280
4-49	Barton Pot Process for Lead Oxide Manufacture	4-280
4-50	Flow Diagram for Type Metal Processes	4-293
4-51	Cross-Section of a Hydraulic Extrusion Press	4-300
4-52	Screw-Type Extrusion Press	4-300
4-53	Sources of Particulate Emissions in Cement Plant	4-307
4-54	A Typical Rotary Cement Kiln and Clinker Cooling System with Fabric Filter	4-308
4-55	Regenerative Glass Furnace	4-318
B-1	Control system diagram for brass and bronze Reverberatory Furnace	B-11

LIST OF TABLES

		Page
1	National Atmospheric Lead Emissions in 1975	xx
2	Lead Control Techniques	xxv
3	Performance of Lead Emission Controls	xxvi
2-1	Origins of Lead in United States	2-6
2-2	United States Consumption of Lead By Industry	2-7
2-3	Composition - Lead Air Emissions	2-11
2-4	Lead Particulate Size Distribution	2-14
2-5	Lead Control Techniques and Performances	2-15
2-6	Comparative Control Efficiencies for Lead and Total Particulate	2-16
2-7	Fugitive Lead Emissions	2-37
2-8	Lead Emission Factors, Annual Emissions, and Control Techniques	2-45
2-9	Relative Contribution of Lead Emissions From All Sources	2-50
3-1	Operating Conditions for Determining Octane Numbers of Fuels	3-2
3-2	ASTM Rating Scale for Automotive Fuels Above 100 Octane	3-10
3-3	Lead Consumption in U.S. Manufacture of Lead Alkyl Gasoline Additives	3-19
3-4	Lead Particle Size Distribution From Vehicles With Conventional Mufflers	3-24
3-5	Distribution of Particle Sizes in Exhaust at 260°F From Leaded and Unleaded Fuel	3-25
3-6	Lead Particle Size Distributions for Three Production Vehicles	3-28
3-7	Melting Points of Selected Lead Compounds	3-33
3-8	Composition of Lead Deposits From A Lead Trap	3-34

LIST OF TABLES (continued)

		Page
3-9	Amended Fuel Additive Regulations as of September 28, 1976	3-38
3-10	Comparison of Properties of CNG, LNG, and Gasoline	3-45
3-11	Estimated Sales-Weighted Fuel Economy For American-Made Automobiles	3-60
3-12	Estimated Costs of DuPont Production Prototype Lead Traps	3-65
3-13	Estimated Costs for Ethyl Tangential Anchored Vortex Trap Based on 57.0 Mm (36,000-mi) Muffler Life, 1973	3-67
3-14	Characteristics of Uncontrolled Exhaust Gas From Pulverized-Coal-Fired Utility Boiler	3-81
3-15	Characteristics of Uncontrolled Exhaust Gas From Cyclone Coal-Fired Boiler	3-82
3-16	Example Flue Gas and Precipitator Collection Efficiency Data	3-87
3-17	Characteristics of Uncontrolled Exhaust Gas From Oil-Fired Boilers	3-95
3-18	Characteristics of Uncontrolled Exhaust Gas From Municipal Incinerators	3-101
3-19	Design Parameters for Electrostatic Precipitators on Incinerators	3-105
3-20	Characteristics of Uncontrolled Exhaust Gas From Medium and Large Waste Oil-Fired Boilers	3-116
4-1	Typical Exhaust Parameters for Battery Manufacturing Operations	4-29
4-2	Lead Control Techniques and Associated Costs for Lead-Acid Battery Plants	4-32
4-3	Lead Removal Efficiency for Well-Controlled Processes	4-34

LIST OF TABLES (continued)

		Page
4-4	Lead Emissions from Ore Grinding and Crushing Operations	4-39
4-5	Characteristics of Uncontrolled Exhaust Gas from Lead Sinter Machine	4-48
4-6	Characteristics of Uncontrolled, Undiluted Exhaust Gas From a Lead Blast Furnace	4-51
4-7	Characteritics of Uncontrolled Exhaust Gas From a Lead Dross Reverberatory	4-54
4-8	Estimates of Fugitive Dust Emissions From Operations at one Primary Lead Smelter	4-55
4-8a	Estimates of Fugitive Dust Emissions From Operations at Two Primary Lead Smelters	4-56
4-9	Particle Size Distribution of Flue Dust from Updraft Primary Lead Sintering Machine	4-58
4-10	Performance of Blast Furnace and Dross Reverberatory Furnace Baghouse	4-66
4-11	Characteristics of Uncontrolled Exhaust Gas From a Zinc Sinter Machine	4-77
4-12	Lead Emissions at Zinc Sinter Machines	4-78
4-13	Characteristics of Uncontrolled Exhaust Gas From Horizontal Zinc Retorts	4-81
4-14	Characteristics of Uncontrolled Exhaust Gas From A Vertical Zinc Retort	4-83
4-15	Lead Emissions - Zinc Retorts	4-85
4-16	Fugitive Lead Emission Sources and Estimated Uncontrolled Particulate Emission Factors	4-86
4-17	Characteristics of Uncontrolled Exhaust Gas From A Copper Roaster	4-101
4-18	Characteristics of Uncontrolled Exhaust Gas From a Copper Reverberatory Furnace	4-106
4-19	Characteristics of Uncontrolled Exhaust Gas From a Copper Converter	4-110

LIST OF TABLES (continued)

		Page
4-20	Uncontrolled Fugitive Emissions From Copper Smelting Operations	4-112
4-21	Chemical Characteristics of Fugitive Particulate Emissions From Various Process Steps in Primary Copper Smelting	4-114
4-22	ESP Performance on Copper Reverberatory Furnace and Roaster Combined Exhaust Gas Streams	4-118
4-23	ESP Performance on Two Copper Converter Operations	4-119
4-24	Characteristics of Uncontrolled Exhaust Gas for Secondary Lead Blast Furnace	4-136
4-25	Uncontrolled Exhaust Gas Characteristics for Secondary Lead Reverberatory Furnace	4-137
4-26	Secondary Lead Fugitive Dust Sources and Emissions	4-137
4-27	Performance of a Fabric Filter on a Secondary Lead Reverberatory Furnace	4-143
4-28	Particulate Emissions From Brass and Bronze Ingot Production	4-158
4-29	Characteristics of Uncontrolled Exhaust Gas From A Brass and Bronze Reverberatory Furnace	4-159
4-30	Lead Emissions From Brass and Bronze Production in 1974	4-163
4-31	Particulate Emissions From a Brass and Bronze Reverberatory Furnace	4-165
4-32	Characteristics of Typical Exhaust Gas From Gray Iron Melting Furnaces	4-181
4-33	Lead Emission Factors and Annual Lead Emissions for the Gray Iron Foundry Industry	4-183
4-34	Emission Characteristics for Various Foundry Operations	4-186

LIST OF TABLES (continued)

		Page
4-35	Dust and Fume Emissions From Gray Iron Cupolas	4-187
4-36	Fabric Filter Performance Test Results on a Gray Iron Electric Arc Furnace	4-192
4-37	Production for Iron and Steel Industry in 1975	4-200
4-38	Characteristics of Uncontrolled Exhaust Gas From Sintering Machines	4-214
4-39	Characteristics of Uncontrolled Exhaust Gas From Iron Blast Furnaces	4-217
4-40	Characteristics of Uncontrolled Exhaust Gas From Open-Hearth Steel Furnaces	4-219
4-41	Characteristics of Uncontrolled Exhaust Gas From Basic Oxygen Furnaces	4-224
4-42	Characteristics of Uncontrolled Exhaust Gas From Electric Arc Furnaces	4-225
4-43	Summary of Performance Test Results on a Fabric Filter Serving Sinter Plant	4-229
4-44	Performance of an Electrostatic Precipitator Serving an Open-Hearth Furnace	4-234
4-45	Summary of Performance Test Results on a Venturi Scrubbing System Serving a Basic Oxygen Furnace	4-235
4-46	Performance of Fabric Filter Serving an Electric-Arc Furnace	4-238
4-47	U. S. Ferroalloy Production in 1975	4-254
4-48	Characteristics of Exhaust Gas From Open Electric Furnaces Processing Common Ferroalloys	4-261
4-49	Lead Emissions From Ferroalloy Production	4-266
4-50	Test Results on an Electric Arc Furnace Equipped With Fabric Filter	4-269

LIST OF TABLES (continued)

		Page
4-51	Characteristics of Uncontrolled Exhaust Gas From Lead Oxide Ball Mill and Barton Pot Processes	4-284
4-52	Performance Test Results on Fabric Filter Systems	4-287
4-53	Characteristics of Uncontrolled Exhaust Gas From Portland Cement Kiln	4-311
A-1	Prefixes for the SI System of Measurement	A-2
A-2	Conversion Factors	A-4
B-1	Steps To Determine Total Equipment Costs	B-2
B-2	Capital Cost Bases	B-3
B-3	Annualized Cost Bases	B-4
B-4	Retrofit Factors	B-5
B-5	Characteristics of Uncontrolled Exhaust Gas From a Brass and Bronze Reverberatory Furnace	B-10
B-6	Determination of Capital Costs for Particulate Control System for a Brass and Bronze Reverberatory Furnace	B-12
B-7	Control System Annual Operating Cost	B-13

SUMMARY

This report documents atmospheric emissions of lead (Pb) and its compounds from various sources, methods for controlling these emissions, and approximate costs for implementing these control methods. Estimates of energy and environmental impacts are given for specific model plants.

Lead and its compounds enter the atmosphere from combustion of fuels, especially leaded gasoline, and from industrial activities. Rural ambient air levels are commonly below 0.5 $\mu g/m^3$ whereas urban air lead levels are mainly 1 to 2 $\mu g/m^3$. In highly populated areas daily averages may exceed 3 to 5 $\mu g/m^3$ and in dense traffic, lead levels have been known to exceed 20 $\mu g/m^3$ for several hours. Near large stationary sources, levels have exceeded 300 $\mu g/m^3$.[1]

In 1975, atmospheric emissions of lead in the United States amounted to 141 Gg (155,900 tons),* of which 90.4 percent was contributed by gasoline combustion. These emissions are summarized by source in Table 1.

---

* The Appendix presents common conversion factors for International and English systems of measurements.

Table 1. NATIONAL ATMOSPHERIC LEAD EMISSIONS IN 1975

	Megagrams	Tons
Gasoline combustion	127,800	140,900
Coal combustion	228	257
Oil combustion	100	110
Solid waste incineration	1,170	1,296
Waste oil disposal	5,000	5,480
Lead alkyl production	1,000	1,100
Storage battery production	82	90
Ore crushing and grinding	493	544
Primary lead smelting	400	440
Primary copper smelting	1,314	1,444
Primary zinc smelting	112	124
Secondary lead smelting	750	830
Brass and bronze production	47	52
Gray iron production	1,080	1,192
Ferroalloy production	30	33
Iron and steel production	605	667
Lead oxide production	100	110
Pigment production	12	13
Cable covering	113	125
Can soldering	63	70
Type metal	435	480
Metallic lead products	77	85
Cement production	312	344
Lead glass production	56	62
Total	141,380	155,880

SOURCES OF LEAD AIR EMISSIONS

Lead emission sources can be categorized into three groups: 1) combustion sources, which emit lead by volatilization of lead components contained in the fuel or in refuse; 2) metallurgical sources, which generate lead emissions by volatilization or mechanical action from melting and processing of metallic ores and materials; and 3) manufacturing sources, which generate lead emissions by using refined lead as the raw material to produce a lead-containing product. All sources listed in Table 1 are considered in this study.

The nature of lead emissions depends on their origin and on the mechanism of formation. High-temperature combustion and smelting processes generate submicron particulate lead fumes. Lead emissions from material handling and mechanical attrition, as in battery manufacturing, consist of larger-sized dust particles. The main chemical forms of lead emissions include elemental lead (Pb), oxides of lead (PbO, PbO_2, Pb_2O_3, etc.), lead sulfates and sulfides ($PbSO_4$, PbS, etc.), alkyl lead ($Pb(CH_3)_4$, $Pb(C_2H_5)_4$), and lead halides.

EMISSION FACTORS

Emission factors for lead were developed for each source category; they are based on source tests, particulate chemical analyses in the literature, industry responses,

material balances, and engineering judgment. Because data in the literature are limited, most of the emission factors should be regarded as approximations; they do provide guidelines for estimating emissions from large groups of sources. In many processes, lead emissions are a function of the lead content of the charge or raw materials, for which data are highly variable and sparse. In addition, the efficiency of common particulate control devices with respect to lead particulates is not well documented.

NATIONAL EMISSION INVENTORY

Annual emissions from each source category are determined by use of (1) the uncontrolled emission factor, (2) the 1975 production output or consumption, and (3) an overall average emission control factor for each source. Production and consumption rates are fairly reliable. Emission factors and overall control efficiency values are inherently less accurate because of the limited availability of source-specific data.

The overall collection efficiencies for lead are assumed equivalent to those for collection of nonlead particulates. This assumption has been verified by limited EPA source tests on fabric filters.[2] For ESP's and wet scrubbers, some recent information indicates differences in the collection efficiency between particulates and lead.[5,6,7,8] Lead compounds are probably less efficiently removed by ESP and wet scrubbers whenever lead emissions are concentrated in the very fine particulate sizes.

EMISSION TRENDS AND PROJECTIONS

Lead emissions from combustion of gasoline can be expected to decrease by about 65 percent by 1985 as levels of lead in gasoline are reduced from the current 0.45 g/litre (1.7 g/gal) to 0.13 g/litre (0.5 g/gal)[3] and as sales increase at 2 percent per annum. These factors represent a reduction of 58 percent of total 1975 lead emissions. They will also result in reduction of lead emissions from waste oil combustion because of a proportionate reduction in lead content, from lead alkyl manufacturing because of reduced production plans. Federal new source performance standards for particulate will also strongly influence future lead emissions. Following are estimates of 1985 lead emissions: gasoline combustion 44.9 Gg (49,500 tons); stationary combustion sources, 3.7 Gg (4038 tons); and industrial processes, 4.2 Gg (4650 tons). These values total 52.8 Gg (58,200 tons) of lead emissions, a reduction of about 63 percent from 1975 emissions.

CONTROL TECHNIQUES

Emissions of lead particulates from automotive sources can be reduced by installing control devices, by reducing or eliminating the lead content of gasoline, or by a combination of these methods. The Federal law requires the reduction of the average lead content in gasoline from 0.45 g Pb/litre (1.7 g Pb/gal) to 0.13 g Pb/litre (0.5 g Pb/gal) by 1979 which should reduce gasoline lead emissions substantially.[3]

Application of particulate traps on automotive exhaust systems is under investigation and is discussed in detail in this document. However, there are no traps installed commercially at this time.

For stationary source emissions, the use of high-efficieny, fine particulate controls such as electrostatic precipitators (ESP), fabric filters, and wet scrubbers is reviewed. Few processes incorporate control devices specifically for lead control. Rather, these devices are installed for collection of particulate to comply with state or federal regulations and/or to recover valuable product. Control techniques described herein are not, therefore, intended exclusively for lead control, but do offer potential for reducing lead emissions. Table 2 shows the lead control techniques that are available or that are used by the various lead emission sources.

Selection of a control strategy must be based upon the required efficiency, gas stream characteristics, particle characteristics, space restrictions, and many other site-specific, economic, and technical factors. Also, the lead emissions and the effects of lead pollution can be reduced by relocation or shutdown of sources, fuel substitution, process changes, improvement of operating practices, and atmosphere dispersion techniques.[4] Table 3 shows the possible lead emission reductions with the various control techniques available.

COST OF CONTROL

The incremental costs to the consumer of nonlead motor

vehicle fuels are difficult to assess because they involve extremely complex technical and political factors.

TABLE 2

LEAD CONTROL TECHNIQUES

Controlled Source	Principal Method of Control
Gasoline combustion	Reduce Pb in gasoline.
Waste oil disposal	Pretreat before burning Blend with fuel oil Reduce Pb in gasoline
Metallurgical processes	Fabric filters, ESP
Lead alkyl manufacture	Scrubbers, fabric filters
Combustion and incineration	ESP
Industrial processes	Fabric filters, scrubbers

TABLE 3

PERFORMANCE OF LEAD EMISSION CONTROLS

Control Device	Possible Emission Reduction*
Lead particulate traps-autos	≥90%
Fabric filters	95-99.99%
Scrubbers	80-99%
ESP	95-99.7%
Cyclone collectors	≥85%

* Assuming that lead particulates are captured with the same control efficiency as for total particulates.

Results of some cost studies (Section 3.1.3) indicate that the incremental consumer cost of controlling lead emissions by requiring the use of nonleaded gasoline ranges from 1 to 4 cents per gallon.

Incremental costs for various types of particulate and lead collection devices range from about $5 to $20 per new automobile, depending upon the type of device. Retrofit installations will cost considerably more.

The capital and annualized costs of particulate emission control are given for each industrial process and control alternative. These data are based on actual operations or engineering cost analyses and are escalated to reflect mid-1976 costs. These costs generally reflect the cost of compliance with existing regulations for particulate emissions. Costs attributable to control of lead emissions are not provided, since they would depend on the degree of control required at a specific site, and it is generally impossible to allocate lead control costs from costs for total particulate control.

IMPACTS OF CONTROLS

The environmental and energy impacts of meeting an air quality standard for lead are thought to be negligible. Relatively few plants may be affected by such a standard. The additional wastewater and solid wastes generated above that generated by SIP controls will be insignificant. The energy

impact may be significant at plants which utilize wet scrubbers or which require additional control equipment. In this document, order of magnitude estimates are given for particulate SIP control impacts for major sources of lead. Generally, impacts for lead control will be much less than for particulate control.

REFERENCES

1. Scientific and Technical Assessment Report. Office of Research and Development. U. S. Environmental Protection Agency. Washington, D. C. EPA 600/6-75-00X. STAR series. February 1975.

2. Preferred Standards Path Analysis on Lead Emissions from Stationary Sources. Emission Standards and Engineering Division. U. S. Environmental Protection Agency. Research Triangle Park, N. C. September 4, 1974.

3. Environmental Protection Agency Regulations of Fuels and Fuel Additives. 40 CFR 42675. Part 80. Subpart B. Sec. 80.20 (a) (1). September 28, 1976.

4. Control Techniques for Particulate Air Pollutants. AP-51. U. S. Environmental Protection Agency. Office of Air Programs. Research Triangle Park, N. C. January 1969. 215 p.

5. KaaKinen, J. W., R. W. Jordan, M. H. Lawasani, and R. E. West. Trace Elements Behavior in Coal-Fired Power Plants. Environmental Science and Technology. Volume IX (9): 862-869. September 1975.

6. Lee Jr., R. E., H. L. Crist, A. E. Riley, and K. E. MacLeod. Concentration and Size of Trace Metal Emissions from a Power Plant, a Steel Plant, and a Cotton Gin. Environmental Science and Technology. Volume IX (7): 643-647. July 1975.

7. Klein, D. H. et al. Pathways of Thirty-Seven Trace Elements Through Coal-Fired Power Plant. Environmental Science and Technology. Volume IX (10): 973-979. October 1975.

8. Natusch, D. F. S. and C. A. Evans, Jr. Toxic Trace Elements: Preferential Concentration in Respirable Particles. Science. Volume 183: 202-204. January 1975.

1.0 INTRODUCTION

Pursuant to the authority delegated to the Administrator of the Environmental Protection Agency, Control Techniques for Lead Air Emissions is issued in accordance with Section 108 of the Clean Air Act as amended August 1977.

Lead air pollutants are generated from a wide variety of sources. The physical and chemical characteristics of exhaust gases containing lead dictate a variety of control techniques and present unique control problems.

The many processes that generate lead air pollutants are described individually in this report. Lead emission factors are presented and are based on source performance testing, chemical analysis of dusts collected by control devices, industry responses, and engineering judgment. Nationwide lead emissions for each source category are estimated for 1975 based upon the emission factors, production levels, and overall level of air pollution control of each source.

Information on capital and annualized costs of installing control equipment is presented for each source category. It is not possible, in most situations, to distinguish between costs of particulate control and costs of lead

control. The control costs are, therefore, presented for particulate control equipment, which coincidentally reduces potential lead emissions with the same efficiency of collection.

Combustion of gasoline in internal combustion engines represent the most significant single source of lead emissions, comprising about 90.4 percent. Strategies for control of lead emissions from motor vehicles are reduction of lead content in the gasoline or installation of lead traps on vehicle exhaust systems. These techniques and associated costs are discussed at length. The implications of the control of lead emissions from gasoline combustion are also considered. Although the stationary sources contribute relatively minor amounts of lead on an annual tonnage basis, they may be of importance in some localities.

The effects of lead on health and welfare are to be described in a companion document, Air Quality Criteria for Lead.

2.0 BACKGROUND INFORMATION

2.1 DEFINITIONS

Following are brief definitions of technical or uncommon terms used throughout this document.

Alumina - The native form of aluminum oxide occurring as corundum or in hydrated forms as a powder or crystalline substance.

Aluminothermic - Pertaining to the process of reducing a metallic oxide to the metal and producing great heat by mixing finely divided aluminum with the oxide, which is reduced as the aluminum is oxidized.

Amine - One of a class of organic compounds that can be considered to be derived from ammonia by replacement of one or more hydrogens by organic radicals.

Antiknock - Resisting detonation or pinging in spark-ignited engines or a substance, such as tetraethyl lead, added to motor and aviation gasolines to increase the resistance of the fuel to knock in spark-ignited engines. Also known as antidetonant.

Autoclave - An airtight vessel for heating and sometimes agitating its contents under high steam pressure; used for industrial processing, sterilizing, and cooking with moist or dry heat at high temperatures.

Calcine - To heat at a high temperature without fusing, as to heat unformed ceramic materials in a kiln, or to heat ores, precipitates, concentrates, or residues so that hydrates, carbonates, or other compounds are decomposed and volatile material is expelled.

Compression Ratio - In internal combustion engines, the ratio between the volume displaced by the piston plus the clearance space to the volume of the clearance space.

Cracking - A process used to reduce the molecular weight of hydrocarbons by breaking molecular bonds of thermal, catalytic, or hydrocracking methods.

Cupola - A vertical cylindrical furnace for melting gray iron for foundry use; the metal, coke, and flux are put into the tops of the furnace onto a bed of coke, through which air is blown.

Dross - An impurity, usually an oxide, formed on the surface of a molten metal.

Dust - Solid particles predominately larger than colloidal size and capable of temporary suspension in air and other gases. Derivation from larger masses through the application of physical force is usually implied.

Electrothermic - Pertaining to the conversion of electric energy into heat energy.

Extruder - A device that forces ductile or semisoft solids through die openings of appropriate shape to produce a continuous film, strip, or tubing.

Flyash - Fine particulate, essentially noncombustible refuse, carried in a gas stream from a furnace.

Fugitive Emissions - Particulate matter which escapes from a defined process flow stream due to leakage, materials charging/handling, inadequate operational control, lack of reasonable available control technology, transfer or storage.

Fumes - Particulate matter consisting of the solid particles generated by condensation from the gaseous state, generally after volatilization from melted substances, and often accompanied by a chemical reaction, such as oxidation.

Galena - PbS - A bluish-gray to lead-gray mineral with brilliant metallic luster, specific gravity 7.5, and hardness 2.5 on Mohs scale; usually occurs in cubic or octahedral crystals, in masses, or in grains.

Gangue - The valueless rock or aggregates of minerals in an ore.

Hydrometallurgy - Treatment of metals and metal-containing materials by wet processes.

Kiln - A heated enclosure used for drying, burning, or firing materials such as ore or ceramics.

Lead - (Pb) atomic weight 207.19; atomic number 82. Melting point, 327.5°C. Boiling point 1744°C; specific gravity 11.35 (20°C). Lead is a cumulative, poisonous metal, which enters the environment largely through combustion and industrial processes.

Linotype - A typesetting machine in which the type molds of letters are arranged in lines; solid slugs, or lines of type, are cast.

Mist - Fine liquid droplets suspended in or falling through a moving or stationary gas atmosphere.

Monotype - A printing technique in which a picture is painted on a sheet of glass or metal and is transferred to a sheet of paper by pressure.

Octane Number - A rating that indicates the tendency to knock when a fuel is used in a standard internal combustion engine under standard conditions; n-heptane is 0, isooctane is 100; different test methods give research octane, motor octane, and road octane values.

Opacity - The light flux transmitted by an emission plume divided by the light flux incident upon it.

Particulate Matter - Matter in the form of small liquid or solid particles.

Pyrometallurgical - Pertaining to high-temperature process metallurgy.

Retort - A closed refractory chamber in which coal is carbonized for manufacture of coal gas, or any vessel for the distillation or decomposition of a substance.

Reverberatory Furnace - A furnace in which heat is supplied by burning of fuel in a space between the charge and the low roof.

Spreader Stoker - A coal-burning system where mechanical feeders and distributing devices form a thin fuel bed on a traveling grate, intermittent-cleaning dump grate, or reciprocating continuous-cleaning grate.

Stereotype - A duplicate printing plate made from type and cuts; a paper matrix, or mat, is forced down over the type and cuts to form a mold, into which molten metal is poured, resulting in a new metal printing surface that exactly duplicates the original.

Trommel Screen - A revolving cylindrical screen used to grade coarsely crushed ore; the ore is fed into the trommel at one end, the fine material drops through the holes, and the coarse is delivered at the other end.

Tuyere - An opening in the shell and refractory lining of a furnace through which air is forced.

VIS Breaking - (Viscosity breaking) A petroleum refinery process used to lower or break the viscosity of high-viscosity residuals by thermal cracking of molecules at relatively low temperatures.

2.2 ORIGIN AND USE OF LEAD[1,2]

Lead production in the United States in 1975 was about 1.13 Tg (1.246×10^6 tons). The approximate total consumption was 1.176 Tg (1.297×10^6 tons) the difference being accounted for by imports and reduction in stocks. Lead is mined primarily as galena and is generally associated with zinc, silver, gold, and copper. Missouri mines account for approximately 80 percent of the Nation's lead ore. Idaho provides about 10 percent; Colorado and Utah produce most of the remaining 10 percent. The total U.S. mine production produces about 84 percent of the primary lead used in this country.

Lead recovered from imported ores has been between 15.5 and 22.8 percent of the total U.S. lead production. Scrap materials consumed by secondary smelters account for nearly 50 percent of lead production. New scrap is from drosses and residues from a variety of sources. The remainder, old scrap, is from batteries, cables, type metal, plumbing,

ballast, and other minor contributors. The origins of lead in the United States economy for the period 1971 through 1975 are reported in Table 2-1.

Lead consumption decreased significantly in 1975 in all usage categories. Reductions in the requirements for storage battery and gasoline lead additives manufacturing were the major contributors to the decrease in lead consumption. This decrease reflects the decreased demand for road motor vehicles and restrictions on leaded fuels by the new model cars.

Table 2-2 shows the estimated lead consumption for each major category. Figure 2-1 illustrates the flow of lead through the U.S. economy in 1975.

2.3 TYPES OF LEAD EMISSIONS

The nature of lead emissions depend upon their origin and the mechanisms of formation. An understanding of these factors is necessary in evaluating the potential impact and control of the emission sources.

Lead may be emitted as a dust with particle diameters ranging from 1 to 150 μm. Dusts are usually produced by mechanical activity. Fumes are generated by condensation, sublimation, or chemical reaction and include particles below 1 micron in diameter. Mists are liquid droplets formed by water vapor condensation on solid particles or atomization of liquid. Most atmospheric lead emissions are

Table 2-1. ORIGINS OF LEAD IN UNITED STATES[2], Megagrams/yr (tons/yr)

Origin	1971	1972	1973	1974	1975
U.S. mine production	524,745 (578,550)	561,356 (618,915)	546,943 (603,024)	602,130 (663,870)	563,668 (621,464)
U.S. primary smelter production					
Refined (soft) lead					
From domestic ores	519,731 (573,022)	523,700 (577,398)	514,501 (567,256)	526,131 (580,078)	480,905 (530,215)
From foreign ores	69,833 (76,993)	93,422 (103,001)	97,285 (107,260)	84,302 (92,946)	96,058 (105,907)
From scrap	1,109 (1,223)	1,078 (1,189)			
Total	590,673 (651,238)	618,200 (681,588)	611,786 (674,516)	610,433 (673,024)	576,963 (636,122)
Antimonial lead					
From domestic ores	11,108 (12,247)	5,565 (6,136)	8,181 (9,020)	5,332 (5,879)	1,504 (1,658)
From foreign ores	3,509 (3,869)	1,858 (2,049)	3,812 (4,203)	3,617 (3,988)	424 (467)
From scrap	2,158 (2,379)	5,275 (5,816)	966 (1,065)	1,405 (1,549)	3,027 (3,337)
Total	16,775 (18,495)	12,698 (14,001)	12,959 (14,288)	10,354 (11,416)	4,955 (5,462)
Total primary smelters	607,448 (669,733)	630,898 (695,589)	624,745 (688,804)	620,787 (684,440)	518,918 (641,584)
U.S. secondary plant production	541,295 (596,797)	559,253 (616,597)	593,437 (654,286)	632,314 (697,149)	548,399 (604,630)
Total U.S. lead production	1,148,743 (1,266,530)	1,190,151 (1,312,186)	1,218,182 (1,343,090)	1,253,101 (1,381,589)	1,130,317 (1,246,214)
Imported lead metal	257,181 (283,551)	272,161 (300,067)	249,640 (275,237)	194,741 (214,709)	164,230 (181,070)

Table 2-2. UNITED STATES CONSUMPTION OF LEAD BY INDUSTRY[2], Megagrams/yr (tons/yr)

Product	1971	1972	1973	1974	1975
Storage batteries	616,581 (679,803)	661,740 (729,592)	697,888 (769,447)	772,656 (851,881)	634,368 (699,414)
Gasoline antiknock additives	239,666 (264,204)	252,454 (278,304)	248,890 (274,410)	227,847 (251,210)	189,369 (208,786)
Pigments and ceramics	73,701 (81,258)	80,917 (89,214)	98,651 (108,766)	105,405 (116,213)	71,718 (79,072)
Ammunition	79,423 (87,567)	76,822 (84,699)	73,091 (81,479)	78,991 (87,090)	68,098 (75,081)
Solder	63,502 (70,013)	64,659 (71,289)	65,095 (71,770)	60,116 (66,280)	52,011 (57,344)
Cable covering	47,998 (52,920)	41,659 (45,930)	39,006 (43,005)	39,387 (43,426)	20,044 (22,099)
Calking lead	27,204 (29,993)	20,392 (22,483)	18,192 (20,057)	17,903 (19,739)	12,966 (14,296)
Pipe and sheet lead	41,523 (45,781)	37,592 (41,447)	40,529 (44,685)	34,238 (37,749)	35,456 (39,092)
Type metal	18,876 (20,812)	18,089 (19,944)	19,883 (21,922)	18,608 (20,516)	14,703 (16,211)
Brass and bronze	18,180 (20,044)	17,963 (19,805)	20,621 (22,735)	20,172 (22,240)	12,157 (13,404)
Bearing metals	14,771 (16,285)	14,435 (15,915)	14,201 (15,657)	13,250 (14,609)	11,051 (12,184)
Weight and ballast	15,830 (17,453)	19,321 (21,302)	18,909 (20,848)	19,426 (21,418)	18,156 (20,018)
Other	41,128 (45,345)	43,803 (48,294)	42,110 (46,428)	42,680 (47,056)	36,368 (40,097)
Total consumption	1,298,383 (1,431,514)	1,349,846 (1,488,254)	1,397,876 (1,541,209)	1,450,679 (1,599,427)	1,176,465 (1,297,098)

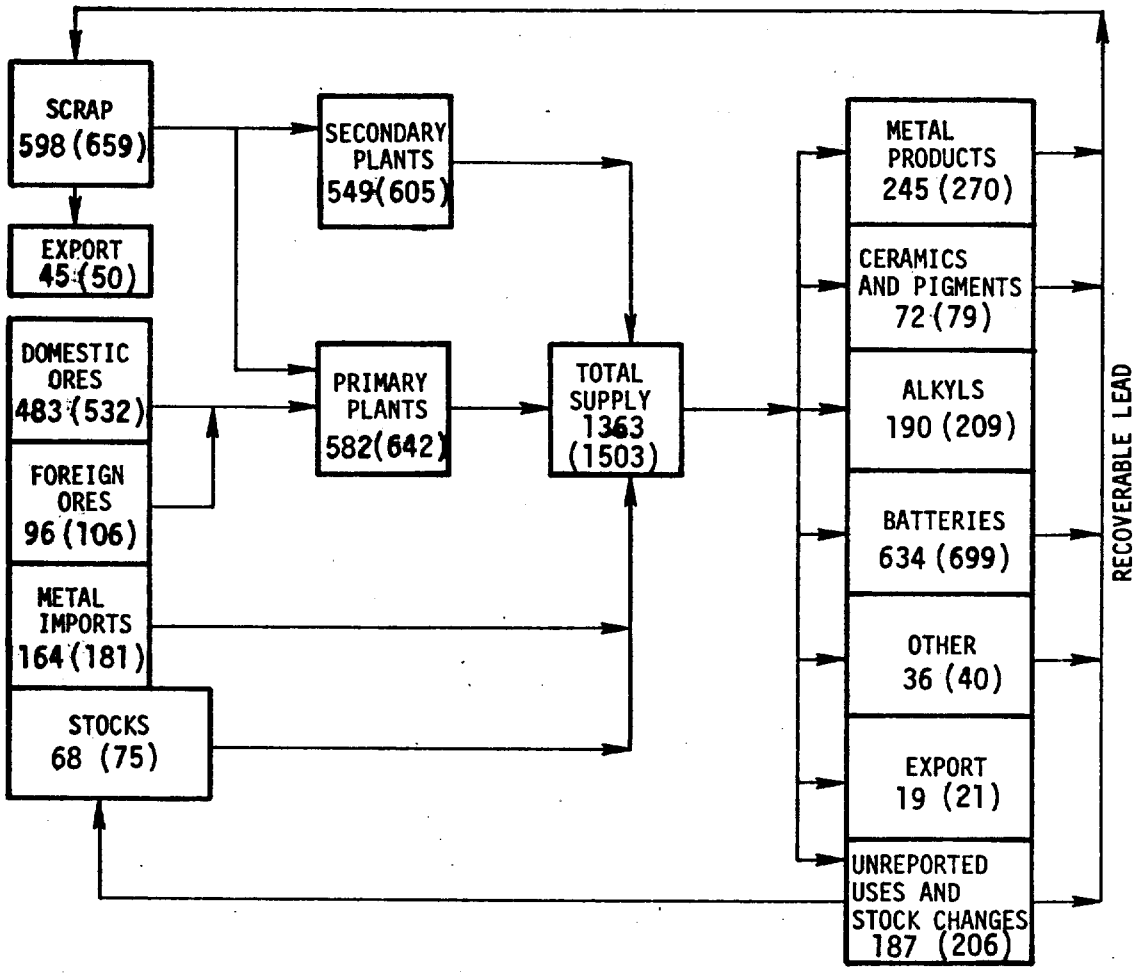

Figure 2-1. Approximate flow of lead through U.S. Industry in 1975 in Mg (tons).

in the form of dusts or fumes. Vapor emissions emanate from the manufacture of high volatile alkyl lead compounds for gasoline additives.

Chemical forms of lead emissions are generally elemental lead (Pb) or lead oxides (PbO, PbO_2, Pb_2O_3, etc.). Lead sulfide, lead sulfate, and lead halide particulates and alkyl lead vapors are also emitted.

2.4 SAMPLING AND ANALYTICAL METHODS[3]

As part of the work done under EPA Contract No. 68-02-1219, Arthur D. Little, Inc. has performed a review of the recent literature pertaining to lead stack sampling and analysis. Their recommendation was to employ a Modified EPA Method 5 sampling train for sample collection, with lead analysis to be performed by atomic absorption spectrometry (AAS). For their immediate needs associated with NSPS, EPA has combined these techniques in a working draft, "Determination of Lead Emissions from the Manufacturing of Lead Batteries."

In this adaption of the Method 5 sampling train, 100 ml of 0.1N HNO_3 is placed in each of the first two impingers to facilitate collection of gaseous lead. Since no separation of gaseous and particulate lead is attempted, a filter, which is of high purity glass fiber, is located between the third and fourth impingers as a backup collector.

A rigorous treatment with HNO_3 of all sample-exposed surfaces and containers, blank analyses of filters and 0.1N

HNO_3, and the most recent revisions of the Method 5 sample recovery procedure are all employed to insure that high quality samples are obtained.

Since emissions from the manufacture of lead batteries are relatively free of other pollutants, possible sample matrix effects associated with AAS are not thought to be of consequence insofar as the impinger portion of the sample is concerned. However, as a precaution against this problem with the filter portion due to the presence of the filter, the analytical technique known as the "method of additions" is used for that fraction of the sample.

EPA is now planning to extend this technique (which is commonly employed by those who use AAS) to the impinger portion for the general lead emission measurement method. Work is currently being initiated to confirm this approach on a variety of sources.

2.5 SOURCES OF LEAD EMISSIONS

Lead emissions result from combustion, furnace operations, smelting processes, mechanical processing operations, and fugitive dust sources.

Table 2-3 shows the composition of lead emissions from the major sources of lead emissions.

The most significant source of lead emissions is the combustion of leaded gasoline, followed by the combustion of waste oil.

Combustion of coal and oil and incineration of municipal waste are also sources of lead. Industrial sources of lead

TABLE 2-3

COMPOSITION - LEAD AIR EMISSIONS

Source	Nature of Emission
Gasoline combustion	Particulate - Lead halides, oxyhalides
Other combustion	Particulate with lead oxides
Metallurgical operations	Particulate with lead oxides
Lead alkyl manufacture	TEL and TML vapor Particulate - lead oxides
Industrial processes	Particulate with lead oxides, Pb

include the production of lead alkyls, primary and secondary nonferrous metals, ferrous metals and alloys, and lead oxides. Other sources of lead include the manufacture of lead acid batteries, cable covering, can soldering, cement production, type metal operations, and manufacture of metallic lead products and lead glass. Figure 2-2 shows the location of some of these industrial sources of lead emissions.

2.6 CONTROL DEVICES

Lead emissions from all sources except gasoline additives manufacturing are in the form of particulate matter and are, therefore, controlled with particulate control equipment. Typical particulate size distribution ranges of lead are shown in Table 2-4 for the major sources of lead emissions. Conventional electrostatic precipitators (ESP), wet scrubbers, and fabric filters are primarily considered in this study as control techniques. Table 2-5 shows the lead control techniques that are in use or have been developed for the various lead emission sources.

Limited EPA tests of fabric filters, ESP, and wet scrubbers indicate that overall collection efficiencies for lead and nonlead particulate are about the same.[9] Table 2-6 shows the results of the emission tests on six lead sources. In all cases except one, the control efficiency for lead was comparable to that for particulate. In that one case, the collection efficiency for lead was better than for particulate. For ESP's and wet scrubbers, there is also some evidence regarding possible differences in collection of lead and nonlead particulate.[11,12,13,14]

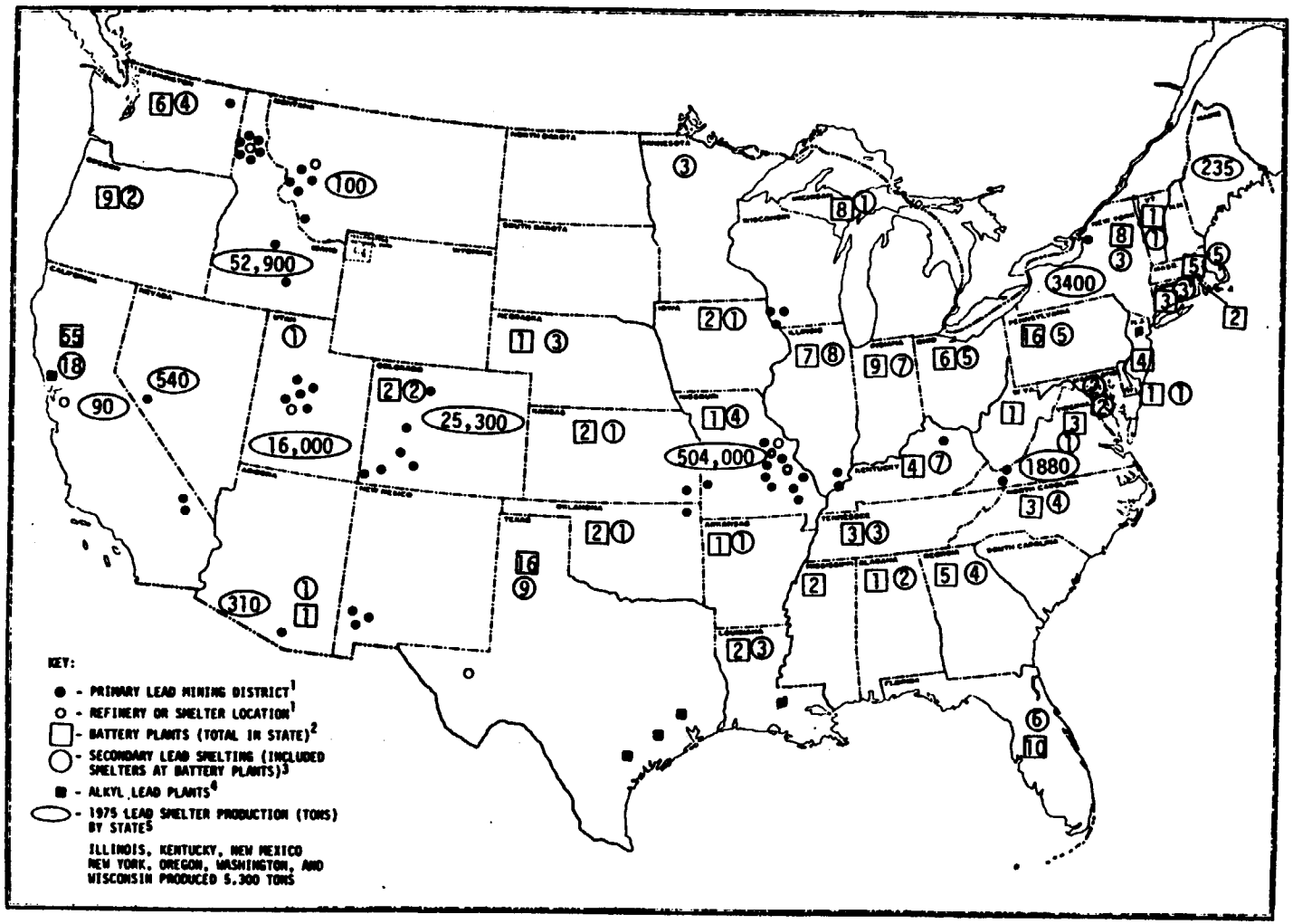

Figure 2-2. [4,5,6,7,8] Map of the Major Lead Emission Sources.

TABLE 2-4

LEAD PARTICULATE SIZE DISTRIBUTION

Lead Source	Particulate Sizes
Gasoline combustion	40-75% <1μ
Waste oil burning	80% <1μ
Solid waste incineration	95% <3μ
Gray iron production	0.5μ -<50μ
Primary lead smelting	
Sintering	1-10% <5μ
Blast Furnace	0.03μ- 0.3μ
Reverberatory furnace	<1μ

TABLE 2-5

LEAD CONTROL TECHNIQUES AND PERFORMANCES

Controlled Source	Method of Control	Feasible Emission Reduction
Gasoline combustion	(1) Reduce Pb in gasoline[1] (2) Lead particulate traps	~65% >90%
Waste oil disposal[2]	(1) Preheat before burning (2) Blend with fuel oil (3) Reduce Pb in gasoline	~65%
Metallurgical processes	(1) Fabric filters (2) ESP	95-99+% 80-90%
Lead alkyl manufacture	(1) Scrubbers (2) Fabric filters	80-99% 95-99+%
Combustion and incineration	ESP	95-99%
Industrial processes	Fabric filters	95-99+%

[1] From current level of 1.7 g/gal to 0.5 g/gal on Ocotober 1, 1979

[2] Will decrease with lead content of gasoline

TABLE 2-6 [9]

COMPARATIVE CONTROL EFFICIENCIES FOR LEAD AND TOTAL PARTICULATE

Source	Control System	Collection Efficiency, %			
		Particulate		Lead	
		Front Half[1]	Total Train[2]	Front Half[1]	Total Train[2]
Primary Lead Smelter (Blast Furnace)	Water Spray Chamber, Baghouse	99.21	98.51	97.66	97.65
Secondary Lead Smelter					
a. Blast Furnace	Afterburner, Cooling Tower, Baghouse	99.91	99.09	99.93	99.92
b. Refining Kettles	Venturi Scrubber, Rotoclone	84.23	82.57	87.95	87.95
Battery Manufacture					
a. Paste Mixer	Scrubber	83.4	77.3	85	84.9
b. Three Process Operation (Stacking, Burning, and Battery Assembly)	Baghouse	35.2	28.8	98.2	96.7
Lead Oxide Manufacture					
a. Furnace and Hammer Mill	Cyclone, Baghouse	99.96	99.96	99.97	99.97
b. In-plant ventilation	Baghouse	99.94	99.90	99.1	99.1
Copper Smelter[3] (Converter)	Electrostatic Precipitator	94	83[4]	—[5]	90

---

1 Front Half - refers to the probe, cyclone, and filter of the EPA particulate sampling train.

2 Total Train - refers to the total EPA particulate sampling train, including the front half and the impingers.

3 See reference 10. Tests conducted according to EPA Method 5 with modifications.

4 The lower collection efficiency based on measurements from the total train compared with that based on measurements from the front half of the train is suspected to be due to SO_2 interference. (Personal verbal communication between Robert Statnick and Susan Wyatt on May 8, 1974).

5 Not available.

ESP and wet scrubbers will be less efficient for removal of lead compounds that concentrate on the very fine particulate sizes. For evaluations in this document, the collection efficiencies of all devices are considered to be the same with respect to lead and nonlead particulates, and Table 2-5 also shows the feasible lead emission reduction with the various control techniques.

Detailed analyses of the design and performance of these control devices and procedures are presented in references 15 through 18. Criteria for selection of gas cleaning devices are illustrated in Figure 2-3.

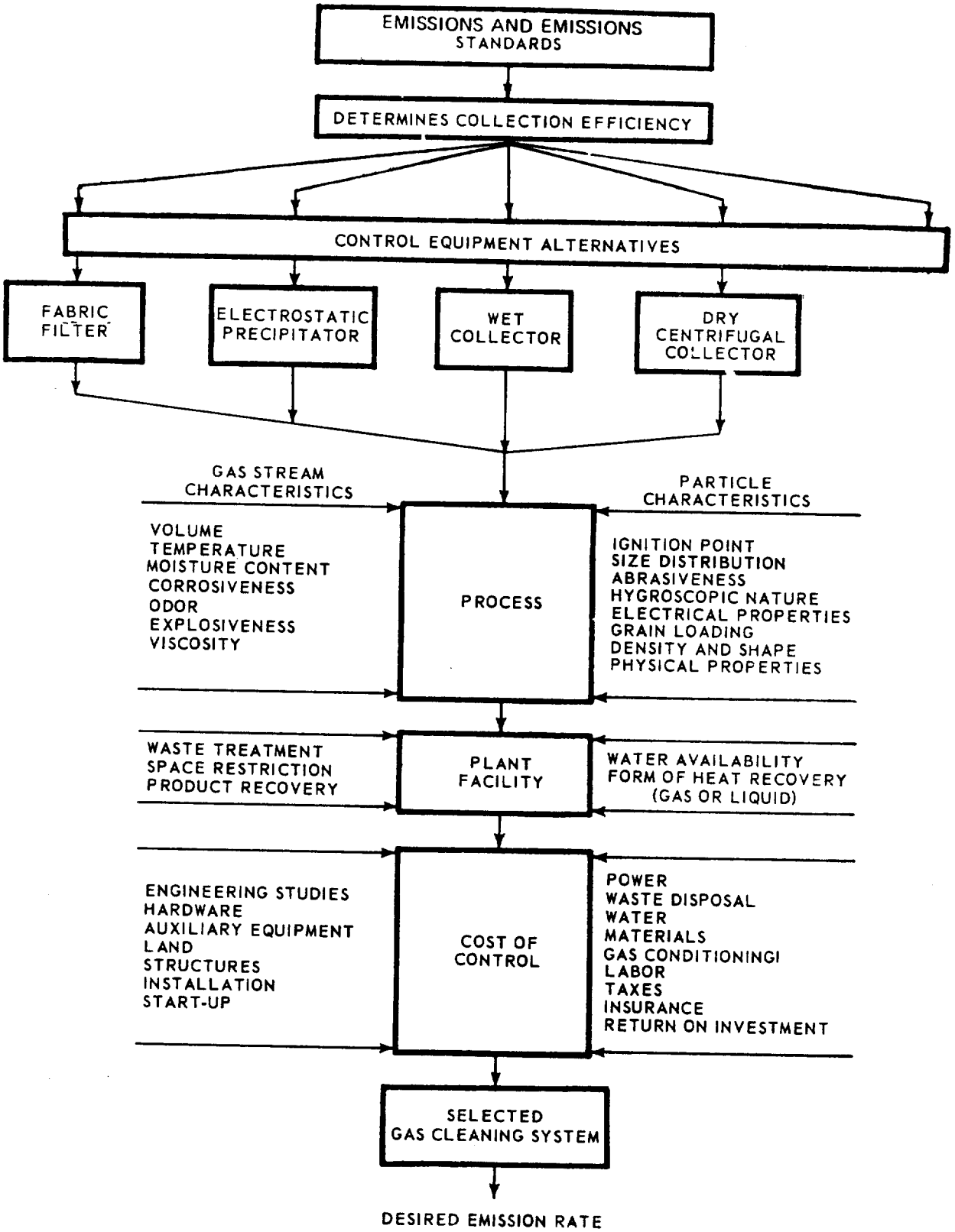

Figure 2-3. Criteria for selection of gas cleaning devices.[19]

2.6.1 Fabric Filters

When high efficiency is required for collection of small particles, the most widely used method of gas cleaning is the fabric filter. Figures 2-4 through 2-6 illustrate popular types of fabric filters. Particles are initially captured and retained on cloth fibers by means of interception, impingement, diffusion, gravitational settling, and electrostatic attraction. Once a mat or cake of dust is formed on the fabric, collection occurs also by sieving. Periodically the fabric is cleaned to allow collection and disposal of the dust and to maintain the pressure drop across the filter within practical limits. Fabrics are available that permit operation at temperatures of up to 290°C (550°F) and provide chemical resistance against constituents in the gas stream.[19]

The gas flow rate and dust concentration, in conjunction with specific flow-resistance properties of the dust deposited on the fabric, determine the required cloth area for operation at a specified pressure drop. Pressure drop is generally selected in the range of 0.75 to 1.0 kPa (3 to 4 in. H_2O), although some systems operate well in excess of 2.5 kPa (10 in. H_2O). Superficial filter velocity, $m^3/s \cdot m^{-2}$ cloth (acfm/ft^2 cloth), commonly called the air-to-cloth ratio, generally ranges from 5.0 to 7.5 x 10^{-3} $m^3/s \cdot m^{-2}$

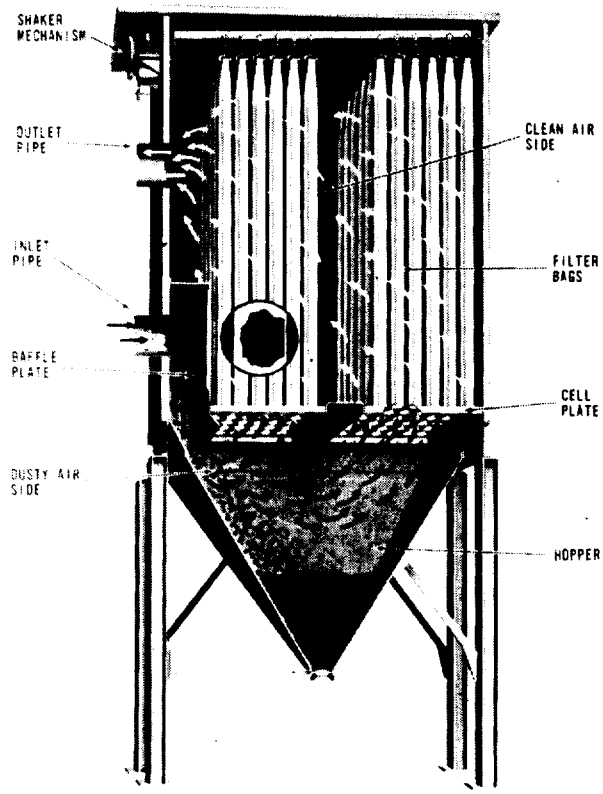

Figure 2-4. Fabric filter with mechanical shaker.[15]
(Courtesy of Wheelabrator-Frye Corp., Pittsburgh)

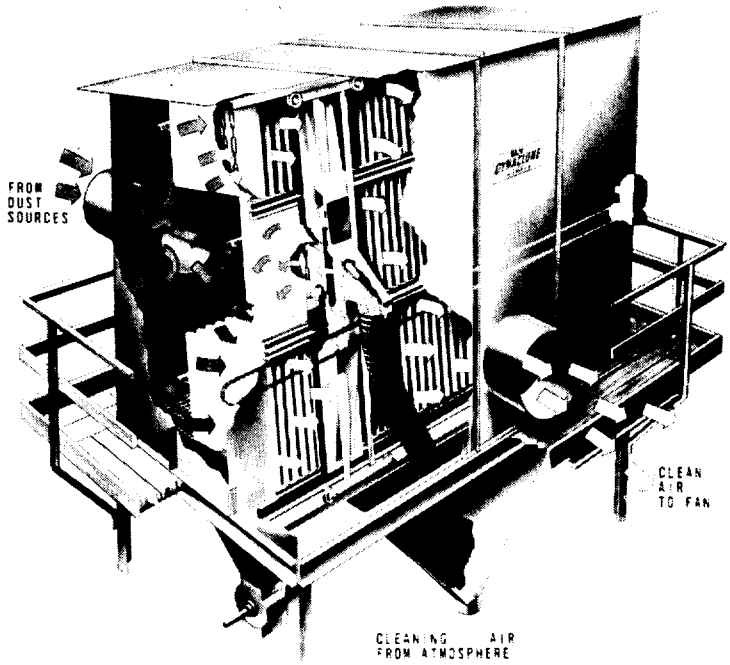

Figure 2-5. Envelope type fabric filter with automatic reverse-air cleaning mechanism.[15]
(Courtesy of W. W. Sly Mfg. Co., Cleveland, Ohio)

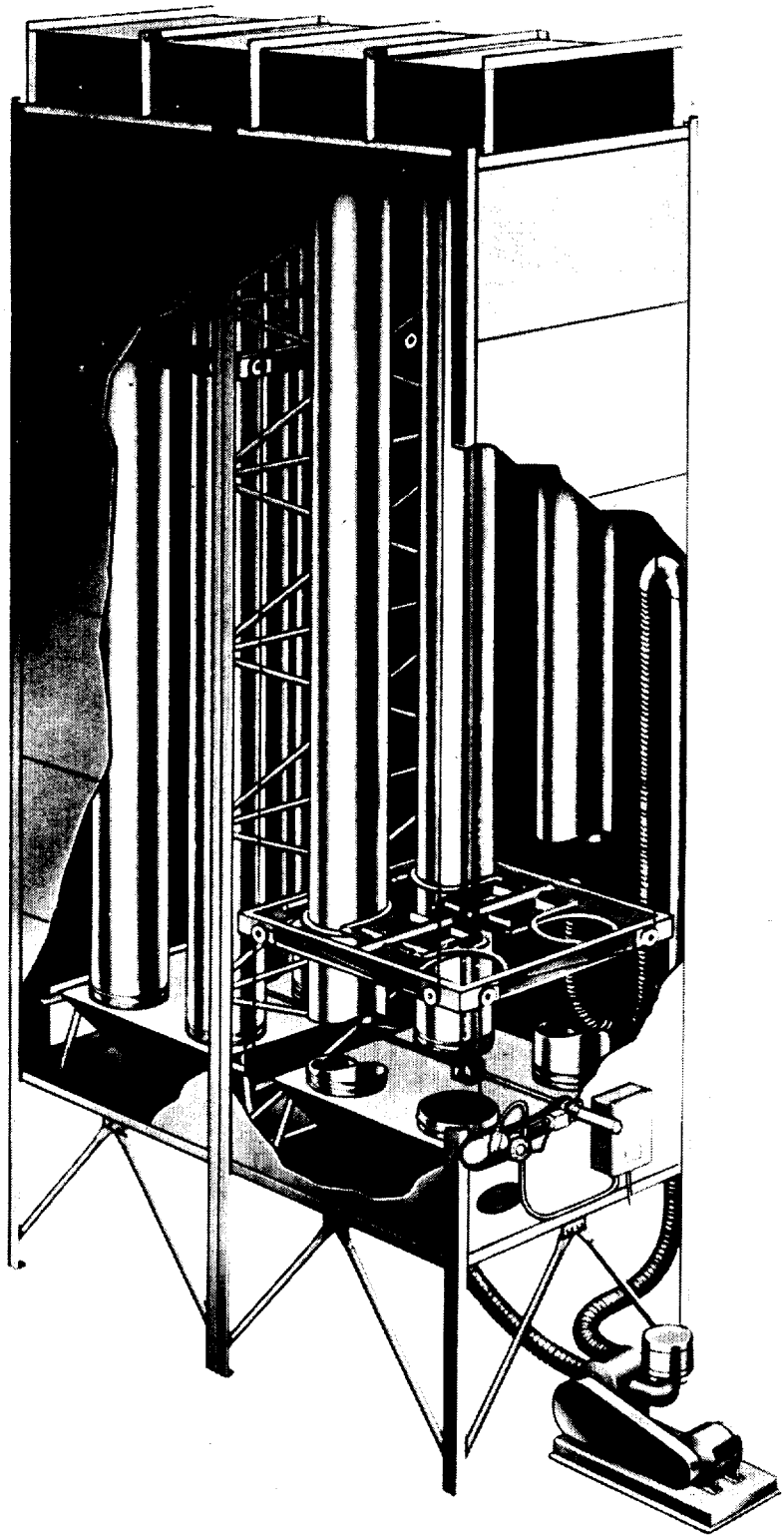

Figure 2-6. Reverse-jet fabric filter.[15]
(Courtesy of Western Precipitation/Joy Mfg. Co., Los Angeles)

cloth (1 to 15 acfm/ft^2 cloth) depending on gas stream and particle characteristics and on the cleaning mechanism.[6]

A variety of cleaning mechanisms are used to remove dust from the filter media: 1) mechanical shaking; 2) air shaking; 3) air bubbling; 4) jet-pulse; 5) reverse air flexing; 6) reverse jet; and 7) repressuring. Very small baghouses, less than 93 m^2 (1000 ft^2) of cloth, are frequently cleaned by manual rapping. This method is unreliable to the extent that it depends on the operator's work habits. Manometers are recommended to indicate pressure drop when cleaning is done manually. Mechanical shakers, which are most common, are driven by electric motors that provide a gentle but effective cleaning action. Air shaking is accomplished by causing air to flow through the rows of bags to impart a cleaning action. In cleaning by air bubbling, a jet of air is released at the top of the bags, causing them to ripple; air bubbling has not been proved effective at high air-to-cloth ratios. In the jet-pulse method a jet of compressed air released through a venturi section at the top of the bag cause the bags to pulse outward; jet pulse cleaning provides for automatic, continuous cleaning with uniform pressure drop and permits higher air-to-cloth ratios. Reverse air flexing is achieved by a double or triple cycle deflation of the bags followed by

gentle inflating through low-pressure reverse flow. Reverse jet cleaning is done with a traveling ring of compressed air, which moves up and down the outside of the tubular bag. Repressuring cleaning is accomplished a low-pressure, high-volume, reverse flow of air through the bags.[19]

A variety of woven and felted fabrics is available for diverse applications. Selection of a filter medium involves consideration of temperature, particle characteristics, corrosivity and reactivity of the gas stream, type of cleaning mechanism, and desired pressure drop. Bag life, which varies greatly with operating conditions, is on the order of 1 to 3 years.

Operational problems with fabric filters include fluctuations in gas flow and dust loading, high temperature and humidity, condensation, and reactivity of gas and/or dust particles with system components. These problems affect pressure drop, efficiency, and bag life. Maintenance includes regular inspection, greasing of mechanical parts, disposal of solid waste and replacement of worn bags.[19]

2.6.2 Wet Collectors

Wet collectors are available in a wide range of costs and performance characteristics. Wet collectors, or scrubbers, are popular because they can remove both solid and

gaseous components from flue gases with high temperatures, moisture content, and corrosivity. High-efficiency collection of submicron particles requires very high expenditure of energy. Efficiency can be related to pressure drop for a specific particle size. Treatment of the wastewater generated by wet collectors can be difficult and expensive.[16]

In orifice-type scrubbers the orifice increases the velocity of the gas to provide for liquid contact. Flow of gas through a restricted passage partially filled with water causes dispersion of the water as centrifugal forces, impingement, and turbulence cause the collection of particles.[19] Figures 2-7 and 2-8 show two types of orifice scrubbers. Pressure drops range from 1 kPa to 3 kPa (4 to 12 in. of H_2O). Water requirements are from 0.03 to 0.67 l/m^3 (0.2 to 5 gpm/10^3 acfm), depending upon gas temperature and desired concentration of solids in the slurry.[20]

Mechanical scrubbers include devices in which the water spray is generated by a rotating disc or drum, promoting high turbulence to promote collision between water droplets and dust particles. Figure 2-9 illustrates a typical mechanical collector.[15]

In a mechanical-centrifugal collector, water sprays are added to the inlet of a rotary blade fan. Collection is due primarily to impingement of dust particles on the wetted rotary blades. The water film on the blades flushes away

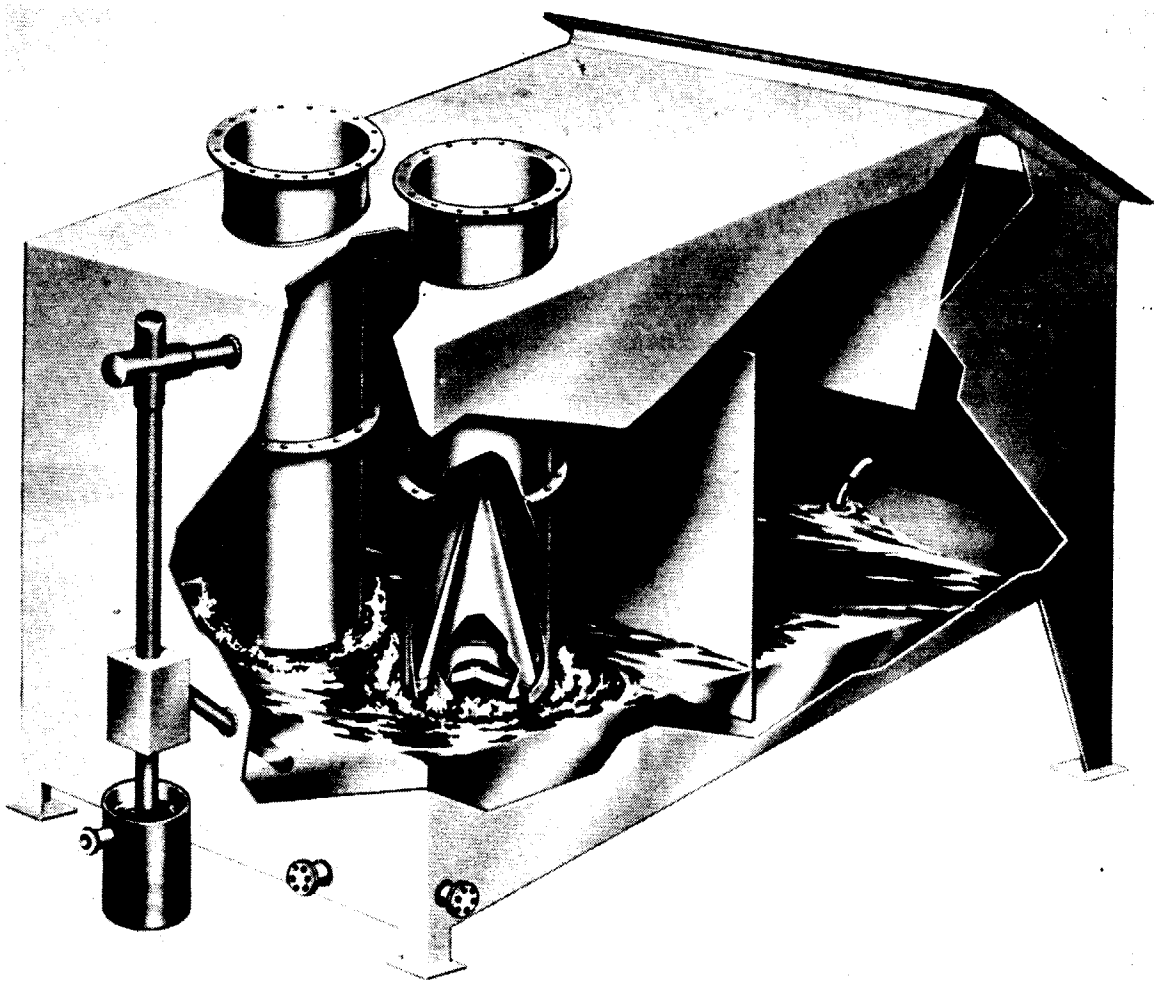

Figure 2-7. Orifice scrubber.[15]
(Courtesy of Western Precipitation/Joy Mfg. Co., Los Angeles)

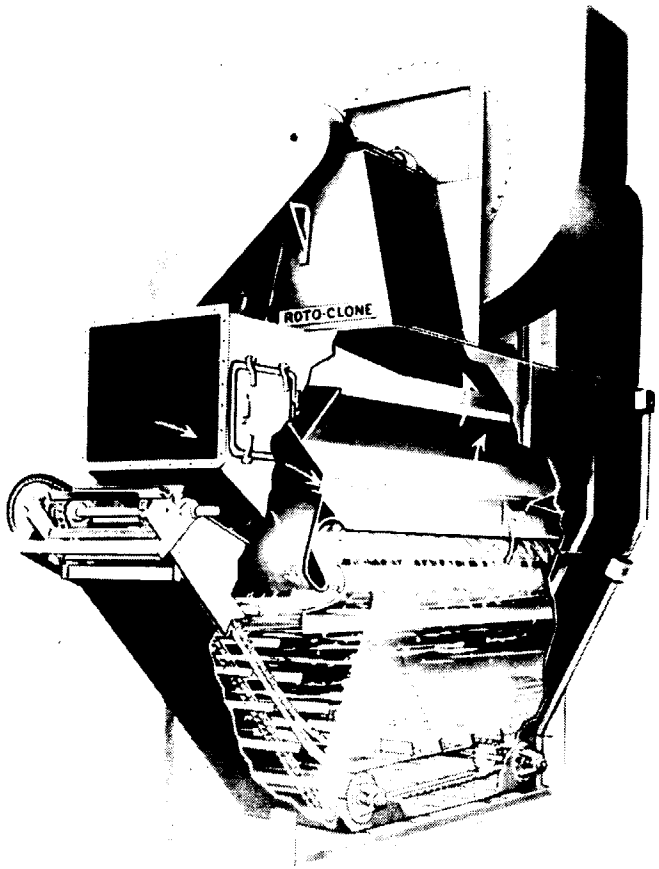

Figure 2-8. Orifice scrubber.[15]
(Courtesy of American Air Filter, Louisville, Ky.)

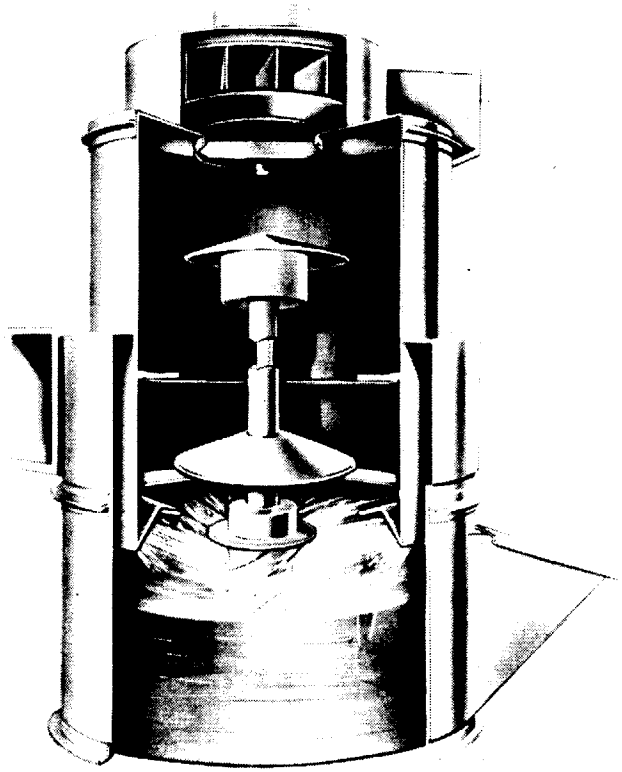

Figure 2-9. Mechanical scrubber.[15]
(Courtesy of American Air Filter, Louisville, Ky.)

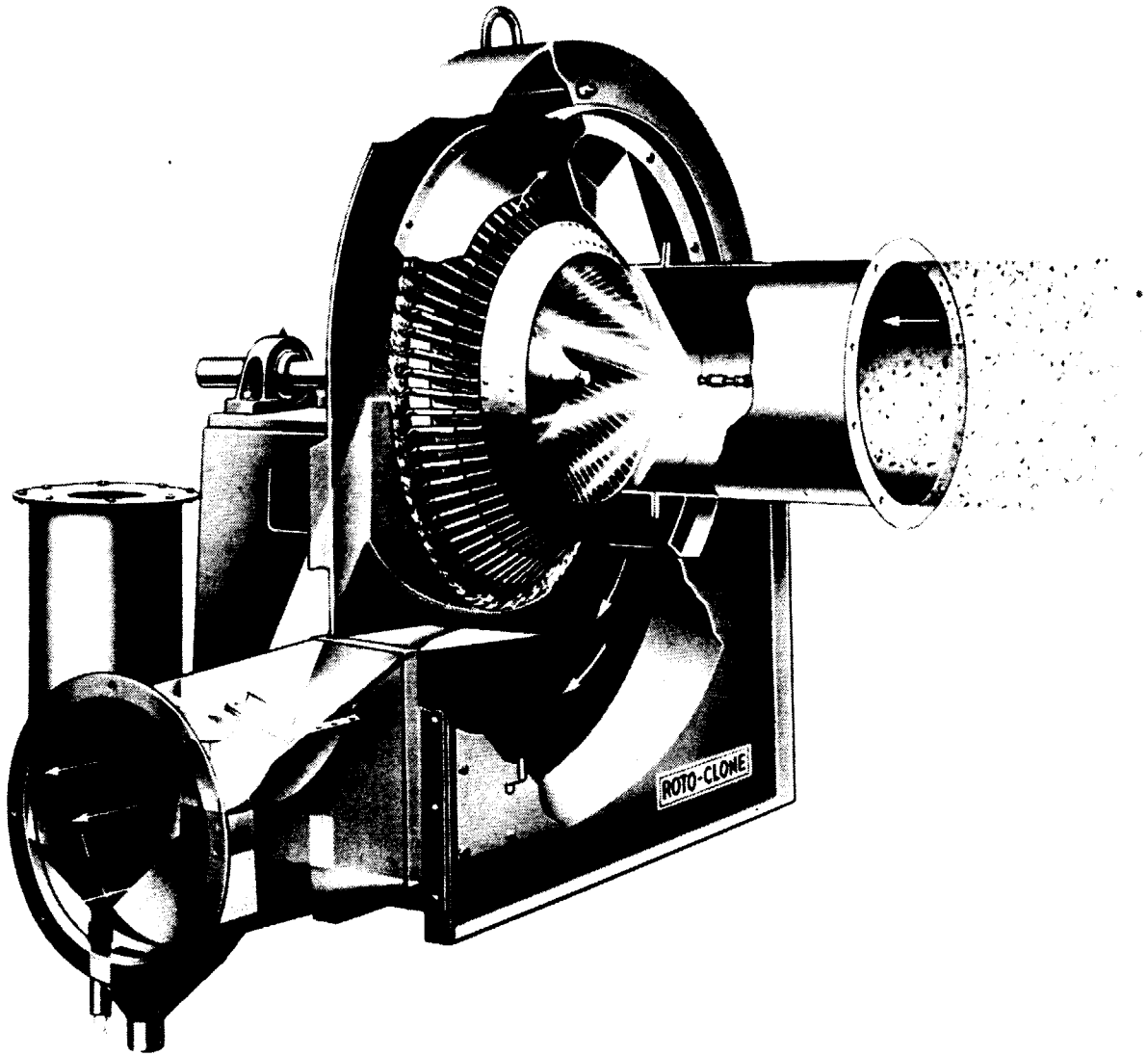

Figure 2-10. Mechanical-centrifugal scrubber.[15]
(Courtesy of American Air Filter, Louisville, Ky.)

the collected dust.[15] Figure 2-10 shows a popular mechanical-centrifugal collector. Pressure drop is about 1.6 kPa (6.5 in. of H_2O) with a maximum pressure drop of 2.25 kPa (9 in. of H_2O). Water requirements range from 0.1 to 0.2 (0.75 to 1.5 gpm/1000 acfm). The chief advantages are low space requirements, moderate power requirements, low water consumption, and a relatively high scrubbing efficiency of 70 to 80 percent.

Impingement plate scrubbers, as shown in Figure 2-11 consist of a tower equipped with one or more impingement stages, mist-removal baffles, and spray chambers. The plates are perforated, and a weir controls the level of water on the plate. The water flows through a downcomer to the next lower stage as dust-laden gas passes through the perforated plates. Overall collection efficiencies are as high as 90 to 98 percent for pressure drops of 2 to 4 kPa (8 to 16 in. H_2O). Water requirements are 0.4 to 0.7 litre/m^3 (3 to 5 gpm/10^3 acfm).[19]

In a venturi scrubber, the flue gases are passed through a venturi throat where water is injected. Gas velocities in the throat range from 75 to 100 m/s (15,000 to 20,000 fpm). Pressure drops can range from 2.5 kPa (10 in. H_2O) to over 20 kPa (80 in. H_2O). The venturi provides very intimate contact and relatively higher collection efficiencies. Liquid-to-gas ratios are from 0.4 to 2 litre/m^3 (3 to 15 gpm/10^3 acfm). The wetted particles and droplets are collected by a cyclone spray separator following the venturi.[16] Figure 2-12 illustrates the operation of a common venturi scrubber system.

2.6.3 Electrostatic Precipitators

The high-voltage electrostatic precipitator (ESP) is commonly used at coal fired boilers, smelters, steel furnaces,

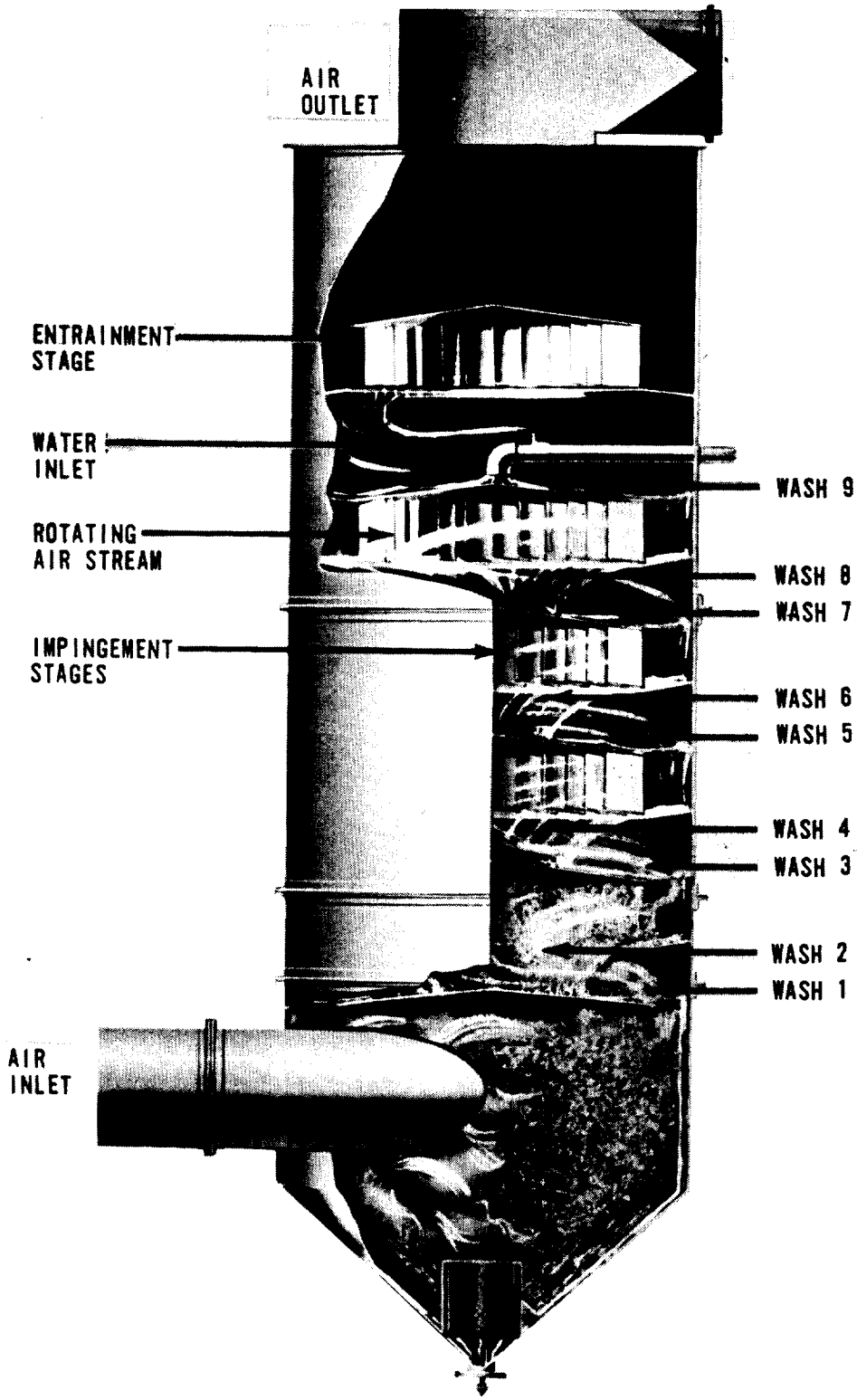

Figure 2-11. Centrifugal-impingement scrubber.[15]
(Courtesy of Schneible Co., Detroit, MI)

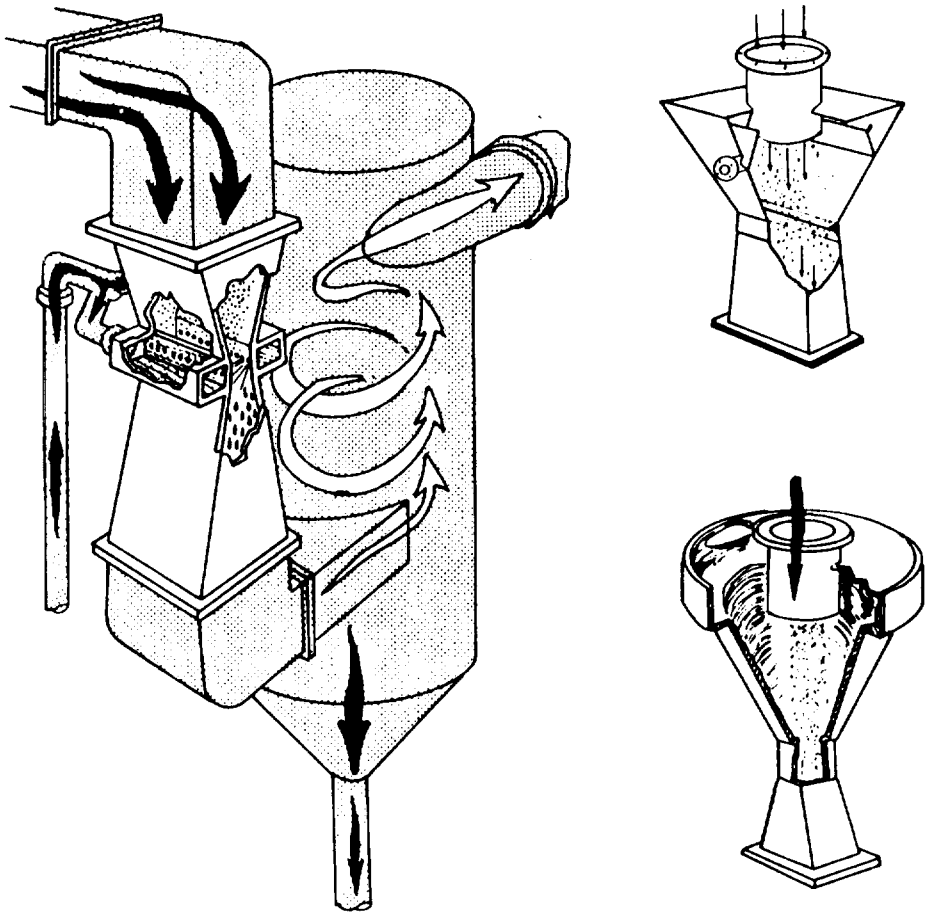

Figure 2-12. Venturi scrubber design and operation.[15]

cement kilns, and many other high-exhaust-volume applications for control of particulate matter.

Electrostatic precipitation separates particles from a gas stream by three basic steps: electrical charging of the dust particles, collection of the dust on a grounded surface, and removal of the dust. The charge is applied by passing the dust-laden gas stream through a high-voltage direct-current corona established between an electrode and the grounded collecting plate. Particles become highly charged in a fraction of a second and migrate toward the collecting surface. The dust is removed by mechanical rappers or by flushing with water.[18] Parameters that must be considered in ESP design include voltage, electrical energy, dust resistivity, velocity, flow distribution, sectionalization, collection area, and residence time. Particle and gas stream characteristics determine the ease of collection, the major factors being resistivity (optimum $< 10^{10}$ ohm - cm) and size distribution of the particles and temperature and moisture content of the gas. For example, in coal-fired boiler applications, the sulfur content of the coal greatly influences the collection efficiency of the ESP since sulfates change the resistivity of the particulates.[18]

Gas conditioning systems, primarily spray chambers, are commonly required to decrease temperature and particle

resistivity prior to precipitation. Addition of moisture decreases resistivity, while in the temperature range of 121°C to 204°C (250°F to 400°F) resistivity increases with temperature. However the net result in moisture addition is a decrease in resistivity. Some systems condition the gases by adding small amounts of sulfur trioxide or ammonia. Cooling can also be accomplished by heat transfer or air dilution.[19]

Common problems in ESP operation are condensation of moisture, corrosion, gas expansion, rapping problems, high resistivity, nonuniform gas distribution, and electrode failure.[18]

Figure 2-13 illustrates the major construction features of a typical ESP.

2.7 FUGITIVE LEAD EMISSIONS

Lead emissions from fugitive dust sources may be significant, in terms of health effects, in primary and secondary lead smelting, copper and zinc smelting, and production of lead oxide and gasoline additives. Examples of fugitive dust sources include uncovered railroad cars, raw material unloading, product loading, storage piles, furnace tapping, conveyors, grinders, transfer points, leaks, and handling of dust collected by control systems.

Fugitive dust emissions containing lead can be controlled by maintenance, enclosure, and wetting. Maintenance includes

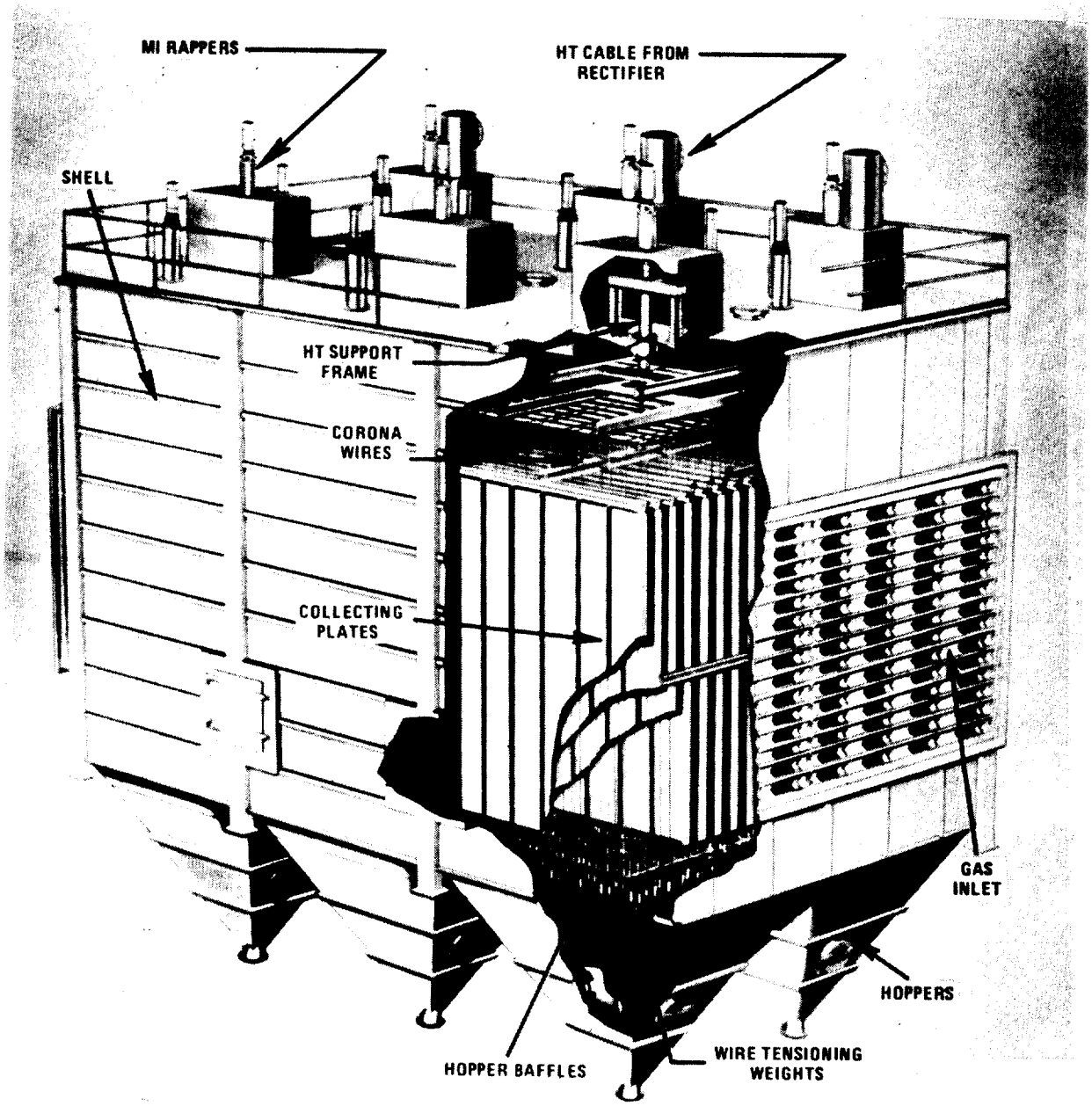

Figure 2-13. Major design features of a common ESP.[15]

sealing of furnaces and ductwork. Furnace charging, furnace tapping, transfer points, conveyors, and mechanical equipment can be enclosed and vented to an adjacent control device. Uncovered railroad cars, trucks, raw materials, and unloading areas can be enclosed or wetted.

Lead and particulate emission factors for fugitive dust sources are estimated for ore mining, crushing, and grinding, primary copper, lead, and zinc smelting, and secondary lead smelting, and are presented under these sections in the document.

Other sources of fugitive dust emissions containing lead do not appear to be a major problem in terms of health impact on surrounding communities. Iron, steel, and gray iron, and non-ferrous metals production operations may have particulate fugitive dust problems. Table 2-7 summarizes some major fugitive lead emission sources and some available control techniques for non-ferrous smelters.

2.8 CONTROL COSTS

Knowledge of the relationships between the cost of control and amount of pollutant reduction is useful in assessing the impact of control on product prices, value added to the product, profits, and investments. Seldom are control systems installed specifically for control of lead emissions, since lead control is usually coincidental with particulate control. It is difficult, therefore, to determine distinct incremental costs for control of lead

TABLE 2-7

FUGITIVE LEAD EMISSIONS

Significant Sources Smelting of primary lead, zinc, copper, and secondary lead.
Operations Transport, storage, charging, furnace tapping.
Control Techniques Maintenance - seal furnaces and ducts. Enclosure - furnace charging, tapping, material handling. Wetting - roads, piles, trucks.

emissions; the costs presented in this report are for the broader category of particulate control.

Capital and annualized costs may be developed for a system having a certain flow rate and desired control efficiency. Under actual operating conditions, however, flow rates and efficiencies may vary. In estimating flow rates for each process, the flow rates may be highly variable, depending upon hooding configuration and other site-specific factors.

Figure 2-14 illustrates the factors influencing the cost of gas cleaning systems. For a specific control device, gas flow rate, and degree of pollutant reduction, capital costs will vary from one application to another. Variations are due to differences in particle and gas stream characteristics, operating requirements, gas conditioning, special materials (stainless steel, ceramic coatings, etc.), insulation, instrumentation, waste treatment, and other factors. Significantly higher costs are usually incurred for retrofitting control systems on existing facilities.

Complete engineering cost estimates were made for the following industries:

Lead Additives Production

Battery Manufacturing

Primary Lead Smelters

AP SECTION	PROCESS	LEAD EMISSION FACTOR		REFERENCE
		Metric	English	
7.11	Secondary lead smelting			
	Lead and iron scrap burning (fugitive)	0.1 - 0.2 kg/MT scrap	0.2 - 0.5 lb/tons scrap	65
	Sweating furnace (fugitive)	0.2 - 0.4 kg/MT chgd.	0.4 - 0.8 lb/ton chgd.	65
	Reverberatory or blast furnace (fugitive)	0.3 - 1.8 kg/MT chgd.	0.6 - 3.6 lb/ton chgd.	65
	Pot furnace (fugitive)	0.005 kg/MT chgd.	0.009 lb/ton chgd.	65
	Casting (fugitive)	0.1 kg/MT lead cast	0.2 lb/ton lead cast	65
7.10	Ferroalloy Plants			
	Grey from foundries cupola	0.0015 - 0.03 kg/MT chgd.	0.003 - 0.06 lb/ton chgd.	65
	Reverberatory (fugitive)	0.0015 kg/MT chgd.	0.003 lb/ton chgd.	65
	Electric induction (fugitive)	0.02 kg/MT chgd.	0.04 lb/ton chgd.	65
	Electric arc (fugitive)	0.23 kg/MT prod.	0.46 lb/ton prod.	65

[65] A Method for Characterization and Quantification of Fugitive Lead Emissions from Secondary Lead Smelters, Ferroalloy Plants and Gray Iron Foundries (Revised), EPA-450/3-78-003, U.S. Environmental Protection Agency, Research Triangle Park, NC, August 1978.

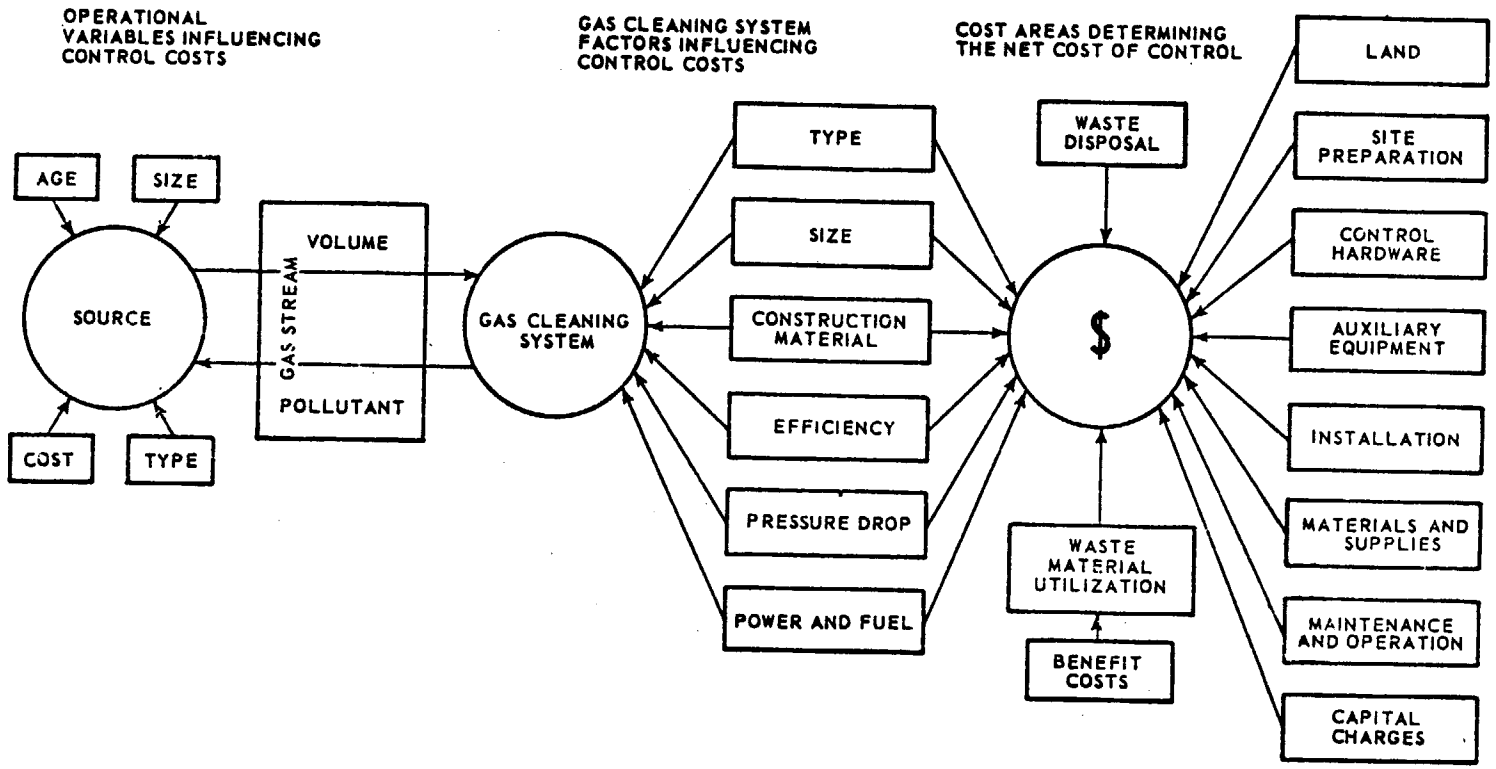

Figure 2-14. Factors influencing capital and annual costs of operating air pollution control systems.[19]

Primary Zinc Smelters

Primary Copper Smelters

Secondary Lead Smelters

Brass and Bronze Production

Gray Iron Foundries

Lead Oxide Manufacturing[a]

Ferroalloys Production

Municipal Incineration

It cannot be overemphasized that the costs developed for the above processes apply only for the assumptions made and are within a range of ± 30 percent of the actual value. For a specific model plant and control configuration, costs can vary widely due to volumetric flow rate and material and equipment selection. In addition, installation charges are dependent on many site-specific factors and also vary widely. Additional costs incurred due to retrofitting new equipment in an existing plant are difficult to estimate and will vary significantly from plant to plant. Most existing plants will have some equipment installed and operating which is suitable for use, i.e., fan, ductwork, and cooling devices. The costs presented in this document include ductwork, cooling equipment, fan, etc. Since most existing plants may have hooding systems and stacks already installed, these costs are not included. Detailed cost analyses are available from EPA - Office of Air Quality Planning and Standards upon request.

---

[a] Lead oxide manufacturing is generally part of lead-acid battery manufacturing plants.

Control costs given for sources other than those listed above were obtained from the literature references indicated.

Cost data reflect mid-1976 prices. A detailed discussion of the costing procedure and assumptions is presented in Appendix B.

2.9 EMISSION ESTIMATES AND EMISSION FACTORS

An emission factor is an estimate of the emissions generated from a specific activity divided by a value indicating the level of that activity. The emission factor for production of gray iron in a cupola is expressed as g Pb/kg product (lb Pb/ton). The emission factor for combustion of distillate oil is expressed as kg Pb/10^3 litre (lb/10^3 gal) of oil fired. The emission factors may also be expressed as a function of the lead content of the material processed. The lead emission factor for combustion of coal is 0.8L g Pb/kg coal (1.6L lb Pb/10^3 ton) where L is the lead content in ppm by weight.

Emission factors are developed for each source category on the basis of source performance test data, chemical analyses of dusts recovered from control devices, industry responses, material balances, and engineering judgment. The data were obtained from current literature, private individuals, control agencies, and industry representatives. Most emission factors given in this study should be considered only as approximations, since they are based on limited data. In many processes, lead emissions are a function of the lead content of the charge or raw material; values for lead content vary widely and are mostly unavailable.

The annual lead emissions for each source category are determined by multiplying the lead emission factor by the 1975 production (consumption) level and by the overall average control factor for each source. Earlier efforts to determine annual lead emissions by use of input from the National Emission Data Systems (NEDS) for particulate emissions yielded results of limited value; this method of calculation was therefore abandoned.

Production rates given in this document are reliable. The elements that remain questionable are the lead emission factors and the overall control efficiencies: although these data may not be fully reliable, they are the best that are currently available. Collection efficiencies are assumed to be essentially the same for lead as for total particulate, except that some major lead emission sources have lead concentrated in the fine particulate sizes.[11,12,13,14] When a smaller number of sources comprise a source category, as in copper smelting, it is not difficult to estimate the overall degree of control. When many sources are controlled at various levels, as with power plants, the estimated control levels are based on NEDS data and other published information. A high degree of error may be prevalent with respect to highly controlled industries. For example, if the actual control level for the iron and steel industry is 99.5

percent and the estimated level is 98 percent, an error of 400 percent would be involved in the estimate. Similarly, if the actual control level of municipal incineration is 60 percent and it is estimated at 50 percent, the error would be only 20 percent. These evaluations assume that the lead emission factor is accurate.

The emission inventory presented is designed such that as new and more reliable information becomes available, i.e., emission factors and control levels, these data can be incorporated to develop a more accurate inventory.

The uncontrolled lead emission factors, annual emission estimates, and control techniques are given for each source in Table 2-8. Table 2-9 presents a breakdown of lead emissions by source category. Detailed discussion and references are given in Chapter 3.0 and 4.0.

2.10 EMISSION TRENDS AND PROJECTIONS

An accurate projection of lead emissions to the atmosphere in 1985 entails projection of changes in production and the impacts of State and Federal regulations on new and existing sources. The only significant reduction of emissions (65 percent) is attributed to the program for phaseout of leaded gasoline additives. A much smaller reduction will be due to additional control of air pollution from stationary sources.

The reduction of gasoline lead content from 0.45 to 0.13 g/l (1.7 to 0.5 g/gal) by 1979[21] will reduce the lead

Table 2-8. LEAD EMISSION FACTORS, ANNUAL EMISSIONS, AND CONTROL TECHNIQUES

Industry ° Process	Uncontrolled lead emission factor		1975 Lead Emissions		Control Techniques[b]		
	g/kg[a]	lb/ton	megagrams	tons	FF	WC	ESP
Gasoline combustion	0.20x[c]	1.65y[d]	127,800	140,900	R	R	R
Coal combustion	0.80L[e]	1.6L[e]	228	257	R	O	T
Oil combustion	0.5P[f]	4.2P[f]			R	R	R
° utilities			45	50	R	R	R
° industrial			14	15	R	R	R
° other sources			41	45	R	R	R
Solid waste incineration	0.2	0.4	1,170	1,296	O	T	T
Waste oil combustion	4.8M[g]	40M[g]	5,000	5,480	R	R	R
Lead alkyl manufacturing							
Sodium-lead alloy process			1,000	1,100			
° recovery furnace	28	55			T	O	R
° process vents, TEL	2	4			R	O	R
° process vents, TML	75	150			R	O	R
° sludge pits	0.6	1.2			R	O	R
Electrolytic process	0.5	1.0	14	15	R	T	R
Storage battery manufacturing	8.0	17.7[h]	82	90			
° grid casting	0.40	0.90			O	O	R
° paste mixing	0.50	1.20			O	T	R
° three-process	6.60	14.7			T	R	R
° lead reclaim	0.35	0.77			O	T	R
° lead oxide production	0.05	0.12			T	T	R

Table 2-8 (continued). LEAD EMISSION FACTORS, ANNUAL EMISSIONS, AND CONTROL TECHNIQUES

Industry • Process	Uncontrolled lead emission factor		1975 lead emissions		Control Techniques[b]		
	g/kg[a]	lb/ton	megagrams	tons	FF	WC	ESP
Ore crushing and grinding	0.006-0.15	0.012-0.3	493	544	R	R	R
Primary copper smelting							
• roasting	1.2P[i]	2.3P[i]	107	112	R	T	T
• reverberatory furnace	0.83	1.7	222	244	R	R	T
• converting	1.3	2.6	987	1,085	R	R	T
Primary lead smelting			400	440			
• sintering	4.2-170	8.4-340 ✓			T	T	O
• blast furnace	8.7-50	17.5-100			T	T	R
• dross reverberatory	1.3-3.5	2.6-7			T	R	R
Primary zinc smelting							
• sintering	13.5-25	27-50	84	93	R	R	T
• horizontal retorts	1.2	2.4	17	19	R	R	R
• vertical retorts	2-2.5	4-5	11	12	T	R	R
Secondary lead smelting			755	830			
• blast furnaces	28	56			T	T	R
• reverberatory furnaces	27	53			T	T	R
Brass and bronze			47	52			
• reverberatory furnace					T	O	R
- high lead alloys	25	50					
- red and yellow brass	6.6	13.2					
- other alloys	2.5	5.0					

Table 2-8 (continued). LEAD EMISSION FACTORS, ANNUAL EMISSIONS, AND CONTROL TECHNIQUES

Industry ° Process	Uncontrolled lead emission factor		1975 Lead Emissions		Control Techniques[b]		
	g/kg[a]	lb/ton	megagrams	tons	FF	WC	ESP
Gray iron production							
° cupola furnace	0.3	0.6	950	1,050	O	T	R
° reverberatory furnace	0.035	0.07	33	36	O	T	R
° electric furnace	0.026	0.05	96	106	R	R	R
Ferroalloy production (electric arc)			31	33			
° FeMn	0.055	0.11			T	T	R
° FeSi	0.15	0.29			T	T	R
° SiMn	0.17	0.34			T	T	O
° H.C.FeCr	0.04	0.08					
Iron and steel production							
° sintering	0.0067[j]	0.013[j]	18	20	R	T	O
° coking	0.0018[k]	0.0035[k]	11	12	R	O	R
° blast furnace	0.062	0.12	91	100	R	T	T
° open hearth	0.07	0.14	128	141	R	R	T
° basic oxygen	0.10	0.20	130	144	R	T	T
° electric furnace	0.11	0.22	227	250	T	R	R
Lead oxide production	0.22[l]	0.44	100	110	T	R	R
Red lead production	0.5[l]	0.9	8	9	T	R	R
White lead production	0.28[l]	0.55	0.9	1	T	R	R
Chrome pigments production	0.065	0.13	3.0	3.3	T	R	R
Type metal operations	0.13[m]	0.25	436	480	T	T	O
Can soldering operations	0.16[n]	0.18[n]	60	67	R	R	R
Cable covering operations	0.25[m]	0.5[m]	113	125	R	R	R

Table 2-8 (continued). LEAD EMISSION FACTORS, ANNUAL EMISSIONS, AND CONTROL TECHNIQUES

Industry ° Process	Uncontrolled lead emission factor		1975 Lead Emissions		Control Techniques[b]		
	g/kg[a]	lb/ton	megagrams	tons	FF	WC	ESP
Portland cement production							
Dry process							
° kilns	0.06	0.11	135	149	T	R	T
° coolers and grinders	0.02	0.04	53	58	T	R	O
Wet process							
° kilns	0.05	0.10	110	120	T	R	T
° coolers and grinders	0.01	0.02	15	17	T	R	O
Metallic lead products	0.75[m]	1.5[m]	77	85	R	R	R
Ammunition manufacturing	0.5[p]	1.0[p]	negligible		R	R	R
Lead glass production	2.5	5.0	56	62	T	R	O
Total 1975 lead emissions			141,380	155,900			

Table 2-8 (continued). LEAD EMISSION FACTORS, ANNUAL EMISSIONS, AND CONTROL TECHNIQUES

[a] Units are g/kg produced unless indicated otherwise by footnote.

[b] FF = fabric filter, WC = wet collector, ESP = electrostatic precipitator. R = rare or never, O = occasional, T = typical.

[c] x = lead content in g/l. Resulting emission factor units are kg/m^3 gasoline. Average 1975 lead content was 0.45 g/l.

[d] y = lead content in g/gal. Resulting emission factor units are lb/10^3 gal gasoline. Average 1975 lead content was 1.7 g/gal.

[e] L = lead content of coal in ppm by weight. Resulting emission factor units are in g/Mg of coal (lb/10^3 ton). U.S. coals average about 8,3 ppm lead.

[f] P = lead content of oil in ppm by weight. Resulting emission factor units are g/m^3 oil (lb/10^6 gal).

[g] M = lead content of waste oil in percent by weight. (Generally around one percent). Resulting emission factor units are kg/m^3 oil (lb/10^3 gal).

[h] Units are kg/10^3 batteries produced (lb/10^3 batteries) for all processes in battery manufacturing.

[i] p = lead content in copper concentrate in percent by weight. Average lead content for U.S. concentrates is 0.3 percent. Emission factor units for all copper operations are expressed in g/kg concentrate (lb/ton).

[j] Units are in g/kg of sinter produced (lb/ton).

[k] Units are in g/kg of coal consumed (lb/ton).

[l] Emission factor given is after control with cyclone/fabric filter product recovery system.

[m] Units are g/kg of lead processed (lb/ton).

[n] Units are kg/10^6 baseboxes (lb/10^6 baseboxes).

[p] Units are g/Mg lead processed (lb/10^3 ton).

Table 2-9. RELATIVE CONTRIBUTION OF LEAD EMISSIONS FROM ALL SOURCES

	% of emissions from source	% of total lead emissions
Mobile combustion		90.4
° Leaded gasoline	100.00	
Stationary combustion		4.6
° Waste oil	76.95	
° Incineration	18.00	
° Coal	3.51	
° Oil	1.54	
Industrial sources		5.0
° Ferrous metals and alloys	24.4	
° Primary nonferrous metals	32.6	
° Lead additives	14.1	
° Secondary nonferrous metals	11.3	
° Lead handling operations	8.5	
° Miscellaneous sources	6.4	
° Lead oxides and pigment	1.6	
° Battery manufacturing	1.1	

emissions from automotive sources from 128 Gg (140,900 tons) in 1975 to 44.9 Gg (49,500 tons) in 1985, assuming a 2 percent per annum increase in average consumption.

The next largest decrease in lead emissions will be from waste oil disposal. Although consumption of waste oil for fuel will increase by over 42 percent by 1985[22], the lead content will decrease proportionately with gasoline content, resulting in a decrease of lead emissions from 5.0 Gg (5,480 tons) in 1975 to 1.86 Gg (2,300 tons) in 1985.

A study of the emissions impact of new source performance standards[23] deals with industrial growth and application of air pollution controls on most sources considered in this document. The report specifies emission reductions anticipated by 1985 based on various assumptions. In the calculation of 1985 emissions, these percentages of reduction are multiplied by the annual emissions for each source category. The results show that 3.7 Gg (4,038 tons) of lead will be emitted by stationary combustion sources in 1985, compared to 6.50 Gg (7,143 tons) in 1975. Approximately 4.2 Gg of lead (4,650 tons) will be emitted in 1985 by industrial sources, compared to 7.1 Gg (7,800 tons) in 1975. The overall atmospheric lead emissions will be reduced 63 percent, from 141.4 Gg (155,840 tons) in 1975 to 52.8 Gg (58,200 tons) in 1985.

2.11 ANTICIPATED IMPACTS

The incremental impacts associated with an air quality standard for lead are those impacts due to additional emission control, beyond that required by a general state or federal emission regulation, in order to meet the lead standard. The incremental impacts that may be incurred by industry due to the NAAQS for lead cannot be estimated quantitatively. However the impacts associated with complying with SIP particulate limits can be estimated and the relative magnitude of the secondary environmental and energy impacts due to additional control can be shown to be insignificant.

2.11.1 Plants Effected

The proposed lead air quality standards would affect those plants which exceed the standard while complying with SIP, NSPS, or other applicable regulations. It is inferred that relatively few plants would require additional emission reductions beyond that required by existing regulations. It appears that the primary copper and lead smelting industries would be most affected by a NAAQS for lead, primarily because of fugitive dust emissions. It is also reasonable to state that not all plants in any one industrial category may require emission cutbacks. For example, NAAQS for lead may be exceeded around only 10 of the over 1500 gray iron foundries after meeting all other emission limitations.

This is due to such plant-specific variables as raw material characteristics, production rates, state emission regulations, meteorological conditions and/or geographical location.

2.11.2 Pollutant Capture

Most plants which require even large emission reductions will need to collect relatively small amounts of emissions. For example, a process meeting SIP limits by a control system with a 90 percent efficiency may require up to 99 percent removal to meet NAAQS; this represents a decrease in emissions by a factor of 10, but only a 10 percent increase in pollutant catch. However, a process meeting SIP limits by a control system with a 95 percent efficiency may require only 98 percent removal to achieve NAAQS; this represents a 60 percent decrease in emissions but only 3 percent increase in the amount of pollutant captured.

2.11.3 Solid Waste Impact

By the emission reductions, additional solid wastes will be generated because of the increase in the amount of pollutants collected. As shown above, this increase may be only 3 to 10 percent for control of lead emissions. However the total impact will usually be much less than 3 to 10 percent because solid wastes generated by air pollution control equipment is usually a small fraction of that

generated by the entire plant. If the total plant solid wastes amount to only 10 times that for air pollution control, the incremental impact of lead control may only be 0.3 to 1.0 percent. Furthermore, most solid wastes produced by the processes considered herein can be recycled to the process and, thereby, would present no impact on solid waste disposal. In no case is a new type of solid waste created. In some industries the collected materials must be disposed of, usually in a landfill. None of these solid wastes should be of a nature such that environmentally acceptable disposal techniques are not available.

Consequently, the slight increases in solid waste production are not expected to necessitate major capital outlay for disposal facilities not already in operation within the area of a plant.

2.11.4 Water Pollution Impacts

Most of the processes considered herein utilize dry collection devices for particulate emissions. These are advantageous because they greatly reduce or eliminate water pollution potential and the collected material is more likely to be acceptable for recycle to the process.

In those processes where wet collectors are used for emission control an increase in plant wastewater generation will occur although this increase will not be significant in

most cases. Moreover, to increase emission reduction to achieve NAAQS for lead, the incremental impact on total plant wastewater flow is even less. Normally, liquid-to-gas ratios are maintained at 0.8 to 1.0 $\ell \cdot s^{-1}/m^3 \cdot s^{-1}$ (6 to 8 gpm/10^3 acfm) while only pressure drop is increased to increase collector efficiency. Therefore there may be no increase in wastewater production to reduce emissions beyond SIP limits. Generally, about 10 percent of the recirculated scrubber water is purged to control solids buildup. This waste stream can be discharged to a municipal sewerage system or recycled to processes with or without treatment. Treatment facilities, if necessary, will generally be available for other plant wastewaters or for wet collecting devices used to meet SIP limits. If treatment facilities are not available, wet scrubbers generating wastewaters requiring extensive treatment may not be an economically feasible alternative, and other control devices would be used. In many industries, such as non-ferrous smelting, huge quantities of wastewater are generated by the production facilities and the wastewater contributed by air pollution control devices is insignificant.

2.11.5 Energy Impacts

The incremental energy impacts for plants which require emission control beyond that required to meet SIP limits

will be most significant for wet scrubber applications. The energy demand by air pollution control devices is generally small in relation to energy demand for production, especially in non-ferrous metals, iron and steel, and other industries where vast quantities of energy are required. Where high energy scrubbers are necessary to remove particulates from high exhaust volumes, considerable energy is consumed. If this is in a plant where process energy demands are relatively low, then the energy impact of air pollution controls to meet SIP limits could be significant. However, if energy demands are so great other control alternatives would be chosen if technically and economically feasible.

The additional energy required to control emissions beyond SIP limits so as to achieve NAAQS for lead would be insignificant for fabric filters and electrostatic precipitators. For scrubber applications, the incremental energy demand is a function of the gas flow rate and the required increase in pressure drop. Below are approximate incremental energy requirements as a function of additional pressure drop:

Additional pressure drop		Incremental energy required	
kPa	in. WG	kJ/m^3	$Btu/10^3$ acf
1	4	6	50
2	8	11	100
3	12	17	150
4	16	22	200
5	20	28	250

2.11.6 Summary of Impacts

Promulgation of a national ambient air quality standard for lead will apparently affect a relatively small number of specific plants. Energy and environmental impacts associated with achieving this standard are essentially negligible for most situations. The impact of SIP controls are shown to be small or negligible, for most cases, and that the impacts of additional control is even less. The data presented in this document relative to secondary impacts have been calculated from assumptions and estimates with questionable accuracy due to variability and lack of data. Therefore, the secondary impacts due to SIP control are considered order of magnitude estimates and are not to be considered as averages or typical estimates. However, the approach taken is sufficient to show that the incremental energy and environmental impacts of achieving NAAQS for lead should be negligible at the affected plants.

2.12 EMERGENCY EPISODE PROCEDURES

Most states have adopted procedures to provide a mechanism for rapid, short-term emission control to prevent accummulation of air pollutants to hazardous levels under unfavorable meteorological conditions.

At the time of writing, however, EPA believes that there is no evidence that exposure to short-term (hourly) peak lead levels in the ambient air have caused adverse health effects in any segment of the general population, although these conditions have not been studied specifically. Therefore, an "emergency episode" for lead will remain undefined until contradictory evidence is uncovered. For this reason, EPA does not intend to require States to adopt specific procedures to prevent lead emergency episodes as part of their implementation plans.

2.13 References

1. Annual Review 1975. U. S. Lead Industry. Lead Industry Association, Inc. New York, N.Y. April 1976. 20p.

2. Lead Industry in May 1976. Mineral Industry Surveys. U. S. Department of the Interior. Bureau of Mines. Washington, D. C. August 5, 1976.

3. Grimley, W. Memo to Mr. George Crane (ESED). U. S. Environmental Protection Agency. Emission Measurement Branch. Research Triangle Park, N. C. November 18, 1976.

4. Crane, G. B. Control Techniques for Lead Air Emissions. Draft. Environmental Protection Agency. Research Triangle Park, N. C. February 1971.

5. Lead Storage Battery Manufacturers in the United States. National Institute for Occupational Safety and Health. Washington, D. C. October 29, 1976. (Unpublished).

6. Secondary Lead Smelters in the United States. National Institute for Occupational Safety and Health. Washington, D. C. (Unpublished).

7. Background Information in Support of the Development of Performance Standards for the Lead Addivities Industry. Interim Report No. 2. PEDCo-Environmental, Inc. Cincinnati, Ohio. For Environmental Protection Agency, Research Triangle Park, N. C. Contract No. 68-02-2085. January 1976.

8. Primary Lead Production in December 1976. Mineral Industries Surveys. U. S. Department of the Interior. Bureau of Mines. Washington, D. C. February 16, 1977. 5 p.

9. Preferred Standards Path Analysis on Lead Emissions From Stationary Sources. Emission Standards and Engineering Division, U. S. Environmental Protection Agency. Research Triangle Park, N. C. September 4, 1974.

10. Statmick, Robert M. Measurement of Sulfur Dioxide and Particulate in a Copper Smelter Converter and Roaster - Reverberatory Gas Streams. Environmental Protection Agency. NERC, CSL (Draft Report). April 1974.

11. KaaKinen, J. W., R. W. Jordan, M. H. Lawasani, and R. E. West. Trace Elements Behavior in Coal-Fired Power Plants. Environmental Science and Technology. Volume IX (9): 862-869. September 1975.

12. Lee Jr., R. E., H. L. Crist, A. E. Riley, and K. E. MacLeod. Concentration and Size of Trace Metal Emissions from a Power Plant, a Steel Plant, and a Cotton Gin. Environmental Science and Technology. Volume IX (7): 643-647. July 1975.

13. Klein, D. H. et al. Pathways of Thirty-Seven Trace Elements Through Coal-Fired Power Plants. Environmental Science and Technology. Volume IX (10): 973-979. October 1975.

14. Natusch, D. F. S. and C. A. Evans, Jr. Toxic Trace Elements: Preferential Concentration in Respirable Particles. Science. Volume 183: 202-204. January 1975.

15. Danielson, T. A. (ed.) Air Pollution Engineering Manual. Los Angeles Air Pollution Control District. Environmental Protection Agency. Research Triangle Park, N. C. AP-40. May 1973.

16. McIlvaine Scrubber Manual. The McIlvaine Co. Northbrook, Illinois. 1974.

17. Billings, C. E. (ed.) McIlvaine Fabric Filter Manual. The McIlvaine Company. Northbrook, Illinois. November 1975.

18. Nichols, G. B. (ed.) Electrostatic Precipitator Manual. The McIlvaine Company. Northbrook, Illinois. February 1976.

19. Control Techniques for Particulate Air Pollutants. AP-51. U. S. Environmental Protection Agency. Office of Air Programs. Research Triangle Park, N. C. January 1969. 215p.

20. Scrubber Handbook. Volume I. Ambient Purification Technology, Inc. Riverside, Calif. For U. S. Environmental Protection Agency, Control Systems Division. August 1972.

21. Environmental Protection Agency Regulations on Fuels and Fuel Additives. 40 CFR 42675. Part 80, Subpart B. Sec. 80.20 (a) (1). September 28, 1976.

22. Resource Recovery and Energy Roundup. Eight-Fold Increases in Waste Oil Rerefined into Lubricating Oil March-April 1976. 22p.

23. Hopper, T. G. and W. A. Marrone. Impact of New Source Performance Standards on 1985 National Emissions from Stationary Sources. Volume I. The Research Corporation of New England. Wethersfield, Connecticut. U. S. Environmental Protection Agency. Research Triangle Park, N. C. Contract 68-02-1382. Task 3. October 24, 1975.

3.0 COMBUSTION SOURCES

3.1 LEADED GASOLINE

Lead alkyl compounds were first added to gasoline in 1923 as a means of suppressing engine knock by promoting uniform burning of the fuel-air mixture in the engine combustion chambers.

Combustion in the cylinder of a gasoline-fueled engine begins when a compressed charge of fuel and air is ignited by a spark. A flame front moves through the mixture in all directions from the point of ignition. The unburned gas ahead of the flame front at any instant is called the end gas. With proper operation, combustion proceeds as an orderly chain reaction through the fuel-air mixture. Expansion of gases by the combustion causes the piston to move and produce mechanical work.

Detonation, or knock, is the premature autoignition and very rapid combustion of the fuel charge in the combustion chamber. Detonation causes the occurrence of high-frequency pressure waves in the combustion chamber and is accompanied by very high rates of pressure rise. Detonating combustion is audible as a sharp metallic rap, and it may cause damage to engines. Energy is dissipated in the form of pressure waves, heat, and vibrations. Higher rates of heat transfer

to cylinder components cause overheating and reduce the lives of valves, spark plugs, and pistons. Overheating of deposits in the combustion chamber can cause knock-induced preignition. The latter is a condition in which a "hot spot" in the combustion chamber ignites the fuel-air mixture before the spark plug fires. The resulting higher temperature and pressure favor detonation of a larger portion of charge. Therefore, detonation caused by using a fuel of insufficient antiknock quality can result in a self-worsening situation that can damage an engine if allowed to persist.

The octane requirements of a gasoline engine are expressed as the minimum antiknock (or antidetonation) quality of the fuel that will allow the engine to operate without knock (or detonation) under "normal" conditions. The octane rating of a fuel is estimated by comparing it to a blend of normal heptane (of poor antiknock quality) and isooctane (of good antiknock quality) that gives the same knock intensity in a test engine under specific conditions.[1] Two test conditions have been specified for determing the octane rating of a fuel;[2] these are summarized in Table 3-1.

Table 3-1. OPERATING CONDITIONS FOR DETERMINING OCTANE NUMBERS OF FUELS[2]

Factor	Research Method	Motor Method
Charge-inlet temperature	52°C (125°F)	149°C (300°F)
Water-jacket temperature	100°C (212°F)	100°C (212°F)
Speed	600 rpm	900 rpm
Moisture, % wt	0.36 - 0.72	0.36 - 0.72

For determination of the Research Octane Number (RON) [American Society for Testing and Materials (ASTM) designation D2699-68] a Cooperative Fuel Research (CFR) one-cylinder, variable-compression-ratio engine is operated at wide-open throttle with the fuel to be tested, under the conditions in Table 3-1. The compression ratio is adjusted to give a standard level of knock intensity on a knock meter. Then reference fuels, which consist of various blends of normal heptane and isooctane, are run in the same engine until a pair is found of which one will cause the engine (at the same compression ratio) to have a slightly higher knock intensity, and the other will cause a slightly lower knock intensity than the fuel being evaluated. The fuel is then bracketed, and its Research Octane Number (RON) is the percentage of isooctane in the blend that would produce the same knock intensity. The actual value is determined by interpolation between the percentages of isooctane of the two fuels that have been shown to bracket the fuel being evaluated.

The Motor Method (ASTM designation D2700-68) is used to determine the Motor Octane Number (MON). Although the general procedure is the same, the specified operating conditions of the engine at wide-open throttle are as shown in Table 3-1.

The Motor Method provides a more severe test, because the higher inlet temperature is more conducive to detona-

tion. Because operating conditions in the Research Method are less stringent, most commercial gasolines show a higher octane rating by the Research Method than by the Motor Method. The difference between Research and Motor ratings is referred to as sensitivity. Thus, the sensitivity of a fuel is defined as:

$$\text{Sensitivity} = \text{RON} - \text{MON}$$

Paraffinic hydrocarbons generally have a very low sensitivity. Olefinic and aromatic fuels, however, are often quite sensitive. Because the severity of engine operating conditions on the road is usually greater than the severity of the RON test conditions, sensitive and insensitive fuels of the same Research Octane Number may differ greatly in performance on the road; i.e., the sensitive fuels are much more prone to detonation. This is the reason for the two test methods: together they predict the knock behavior of fuels at road conditions better than either test method alone.

Engine fuel octane requirements may be affected by several engine design factors and operating conditions. A major design factor is compression ratio. Compression ratio is defined as the ratio between the gas volume in the piston chamber of an engine when the piston is at the end of the power stroke and the gas volume in the chamber when the piston is at the point of maximum compression. As the compression ratio increases, the maximum cycle temperature

and maximum cycle pressure increase; hence, there is increased tendency for detonation. The efficiency of gasoline-fueled engines generally increases as the compression ratio increases. In years prior to requirements for control of air pollutants from motor vehicles, many automobile engines were designed for use with the highest compression ratio compatible with octane ratings of fuel supplies. With application of emissions control technology in recent years, there has been a general reduction in the compression ratios of automobile engines. It has been reported recently that if pollutant emissions are held constant there is no improvement in fuel economy with increasing compression ratio.[3] This is because of the tendency toward gas heat loss and flame quenching at high compression ratio, where the metal surface to gas ratio is larger than at lower compression ratios. Cooler combustion increases unburned hydrocarbons.

All internal combustion engines are equipped with some type of cooling system. Generally, as the coolant temperature increases, the end-gas temperature also increases and thus increases the tendency for detonation. An improperly functioning cooling system, such as one that is scaled (impeding heat transfer), clogged (impeding flow), or not full of coolant, can increase the octane requirement of the engine by allowing increased temperature of the combustion chambers.

For best operation at normal speeds, the spark ignition timing of most engines is so controlled that the electrical spark that ignites the fuel-air mixture occurs before the piston has compressed the mixture to its minimum volume.

Such "spark advance" increases the efficiency of the engine; it also increases the peak cycle temperature and pressure and thus increases the tendency of the engine to detonate. Engines using higher-octane fuel are generally adjusted for greater spark advance than are those using low-octane fuel. Moderate retardation of the spark from the best power setting (i.e., timing the spark to occur later in the cycle) lowers the octane requirement of an engine. Spark retardation causes another phenomenon, however; because the charge is ignited later, spark retardation causes a larger fraction of the combustion heat to be rejected to the engine coolant than would be the case with best power spark-advance conditions. With a great deal of spark retardation, coolant temperature may rise, especially at low speeds and heavy loads.

The air-fuel ratio affects engine octane requirements. Generally, air-fuel ratios near stoichiometric (between 14.5:1 and 15:1 air-to-fuel mass ratio) result in the highest octane requirement. Rich mixtures (between 12:1 and 13:1 air-to-fuel mass ratio) reduce the peak combustion temperature and pressure and reduce octane requirement. Combustion of very lean mixtures could theoretically reduce peak combustion temperature and pressure and reduce octane requirement because of the presence of excess air. In conventional engines, however, difficulties such as loss of power, misfiring, and stalling, especially at heavy loads

where detonation most often occurs, preclude the use of very lean mixtures (between 15:1 and 17:1 air-to-fuel mass ratio) as a means of lowering octane requirement under heavy load conditions.

Design of the combustion chamber influences the fuel octane requirements of an engine. By virtue of design a combustion chamber may contain "hot spots", such as an exhaust valve or spark plug that does not cool well. Such hot spots may cause preignition, with high peak combustion temperature and pressure and increased detonation tendency. Deposits of foreign matter that remain incandescent in the combustion chamber can also cause preignition. Such deposits often consist of lead compounds derived from lead alkyl antiknock fuel additives.

Motor gasoline is a complex mixture of relatively volatile hydrocarbons obtained from the refining of petroleum. It ordinarily contains chemical additives of one kind or another. Petroleum refining consists of a series of processing, treating, and blending steps to convert mixtures of crude oils of varying quality into gasoline and a wide variety of other useful products. The type and amount of each product depends on current demands. The largest demand is for motor gasolines, which, in the United States, accounts for about 45 percent of the total petroleum products. Modern refinery operations consist of a number of basic processing steps, not all of which are necessarily

found in all refineries. These operations include crude distillation, thermal cracking and visbreaking, catalytic cracking, catalytic reforming, hydrogenation, alkylation, isomerization, coking, and treating. Although each unit in the refinery performs a specific function, the major emphasis is on producing a high-quality motor gasoline.

To increase the octane number of gasoline and suppress knock, antiknock agents are added to the fuel. Although a number of chemical compounds can provide some antiknock effectiveness, the most commonly used and the most cost-effective are tetraethyl lead (TEL) and tetramethyl lead (TML).[1] An addition of about 0.8 g/l TEL (3 g/gal) to catalytically cracked gasoline will often provide an increase in octane number of 5 to 7. In fact, the octane scale above 100 is based on the amount of addition of lead to isooctane, as shown in Table 3-2.

The relationship between gasoline lead content and octane number is not linear. The initial increment of TEL is most effective in increasing the antiknock quality of gasoline, and the effectiveness of each succeeding increment is less. For instance, if the TEL content of the premium gasoline shown in Figure 3-1 were reduced from 0.8 to 0.5 g/liter (3.0 to 2.0 g/gal), the lead content of the gasoline would be reduced by 33.33 percent at the expense of about 1.4 RON, or 17 percent of the total octane-number lead response.

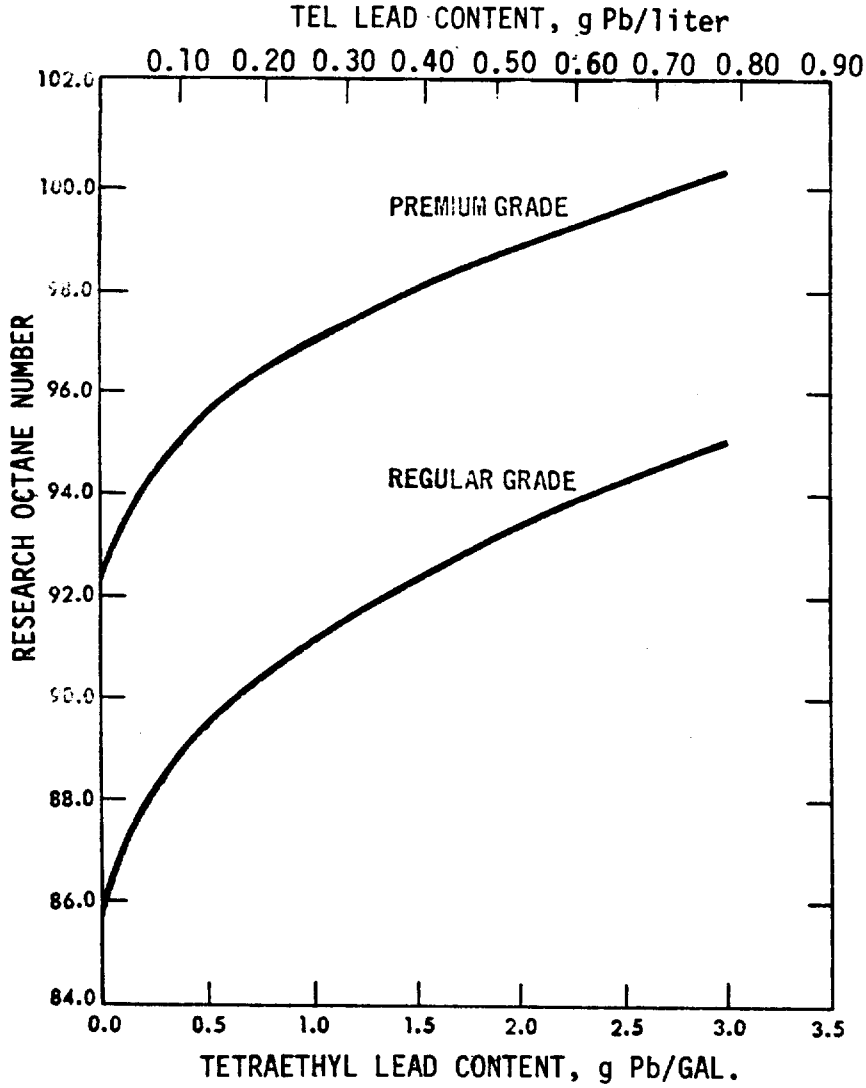

Figure 3-1. Octane number versus lead content for gasolines[4]

Table 3-2. ASTM RATING SCALE FOR AUTOMOTIVE FUELS ABOVE 100 OCTANE[5]

TEL in isooctane, ppm by volume[a]	Octane number
0	100
132	105.3
264	108.6
396	111.0
528	112.8
661	114.3
793	115.5

[a] 1.06 kg Pb/liter TEL (8.83 lb Pb/gal TEL).

The effectiveness of the lead alkyls as antiknock agents depends upon their ability to retard or suppress the autoignition at high compression ratio. The mechanism involved is not understood, even after much research. It is believed, however, that the lead alkyl decomposes in the engine cyclinder to form fine colloidal particles of lead oxide.[6] The particles then react with free radicals in the hot, high-pressure gases ahead of the advancing flame front and thus terminate chain reactions that lead to the formation of compounds (e.g., peroxides) capable of lowering the autoignition temperature of the unburned mixture. In essence then, the lead alkyls suppress detonation or knock in spark-ignited engines by promoting smooth combustion of the entire

batch of fuel-air mixture charged to the cylinder of an engine and do not permit all of the mixture to explode simultaneously. It is important to bear in mind that the antiknock quality of gasoline is controlled primarily by the chemical composition of the hydrocarbons in the gasoline, and that the lead alkyls are used to supplement the antiknock quality achievable by varying the chemical composition. There are finite limits on the levels of antiknock quality that can be reached by varying the nature of the hydrocarbons contained in gasolines. In addition, there are finite limits on the degree to which the antiknock quality of gasolines can be improved by the inclusion of the lead alkyls.

TEL is the most widely used antiknock agent, but tetramethyl lead (TML) and mixtures of TEL and TML are being used because they are more volatile than TEL and, therefore, provide more even distribution of antiknock quality throughout the gasoline boiling range. By distributing the antiknock action more evenly throughout the vaporizing fuel, TEL-TML mixtures often provide superior antiknock performance in multicylinder carbureted engines.[1]

Other knock suppressors include organic amines, such as aniline, which are somewhat effective but higher in cost than lead alkyls partly because of the large amounts required. Iron carbonyl is effective and relatively inexpensive, but the combustion products are abrasive and cause

accelerated engine wear. Some organic chemicals (e.g., tert-butyl acetate) have shown a synergistic effect when added to leaded gasoline. Such compounds give an increase in octane number greater than would be expected from the individual effects of the compound and the lead alkyl.

The nonleaded organometallic additive commanding greatest interest at this time is methylcyclopentadienyl manganese tricarbonyl (MMT). This compound has had commercial use as a combustion improver for fuel oil and turbine fuel.[7] Since the 1960's it has had limited use in gasoline, usually in combination with lead alkyls.[8] In this latter use, 7.9 to 40 mg of manganese per liter of fuel (0.03 to 0.15 g/gal) is reported to yield 2 to 4 research octane numbers in selected fuels. Used without lead alkyls at a concentration of 33 mg Mn/liter (0.125 g Mn/gal) (the recommended maximum), MMT is reported to increase the road octane value of gasoline about 2 numbers without adverse effects upon engine durability or engine exhaust oxidation catalysts.[9] At a meeting with EPA at Ann Arbor on January 20, 1977, General Motors reported that the use of MMT increased hydrocarbon emissions and plugged emission control catalysts.

3.1.1 Emissions

Factors that influence the emissions of lead from combustion of gasoline in motor vehicles have changed in the past decade. These factors are lower fuel octane and use of catalytic converters. Lower fuel octane requirements are related

to a decrease in average compression ratio in passenger car engines, necessary to be compatible with the use of unleaded gasoline. As depicted in Figure 3-2, the model-year-weighted average compression ratio increased approximately 2-½ numbers from 1950 to 1969; it then decreased approximately 1-½ numbers to a weighted average value of 8.2 for the model years 1974 and later.[10,11] Early in 1976 an official of General Motors Corporation announced that there would be no increase in the compression ratio of General Motors cars before 1985.[12]

Figure 3-3 illustrates the changes in octane quality of gasolines over the years due to both refining and lead addition.[12] The improvement achieved in recent years by lead addition is substantially less than in early years. The principal factor in octane quality today is refining, and the role of lead has been gradually reduced. Between 1930 and 1970, the regular gasoline clear (nonleaded) pool increased about 24 octane numbers, while the premium gasoline clear (nonleaded) pool increased 34 octane numbers; these increases have resulted from refinery operations. The incremental increase for both premium and regular gasoline resulting from the addition of lead alkyls has averaged about 7 octane numbers over the past two or three decades.

With the decrease in the sales-weighted average compression ratio for passenger car engines since 1970, the number of passenger cars requiring premium gasoline has decreased markedly. As a consequence, the demand for premium

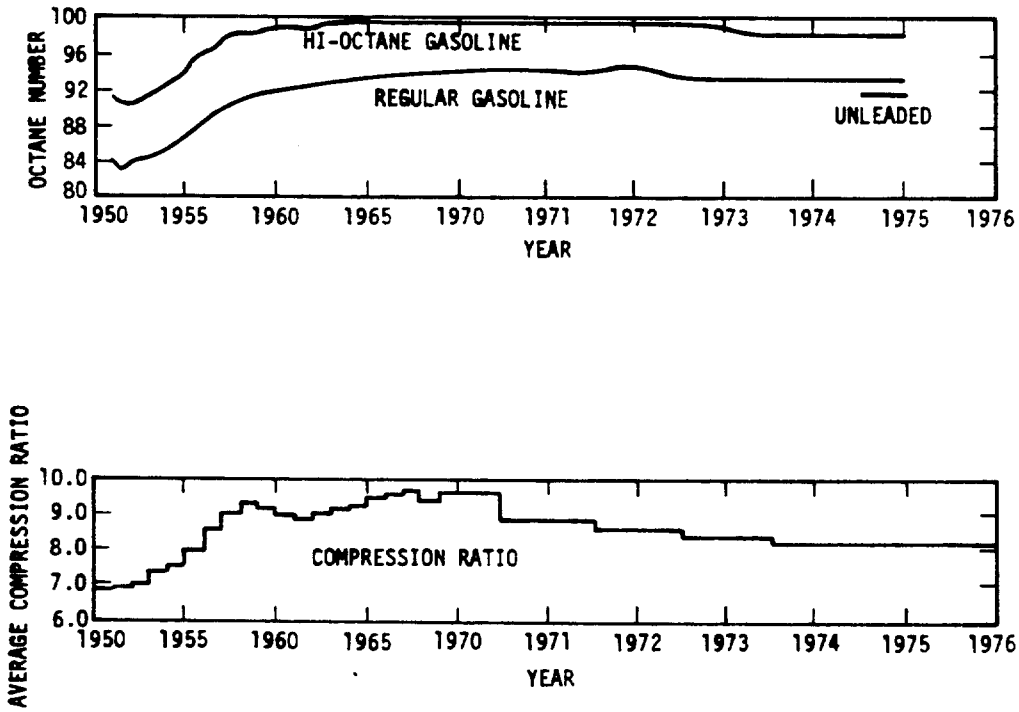

Figure 3-2. Yearly trends of United States passenger car engine design and gasoline antiknock quality.[10,11]

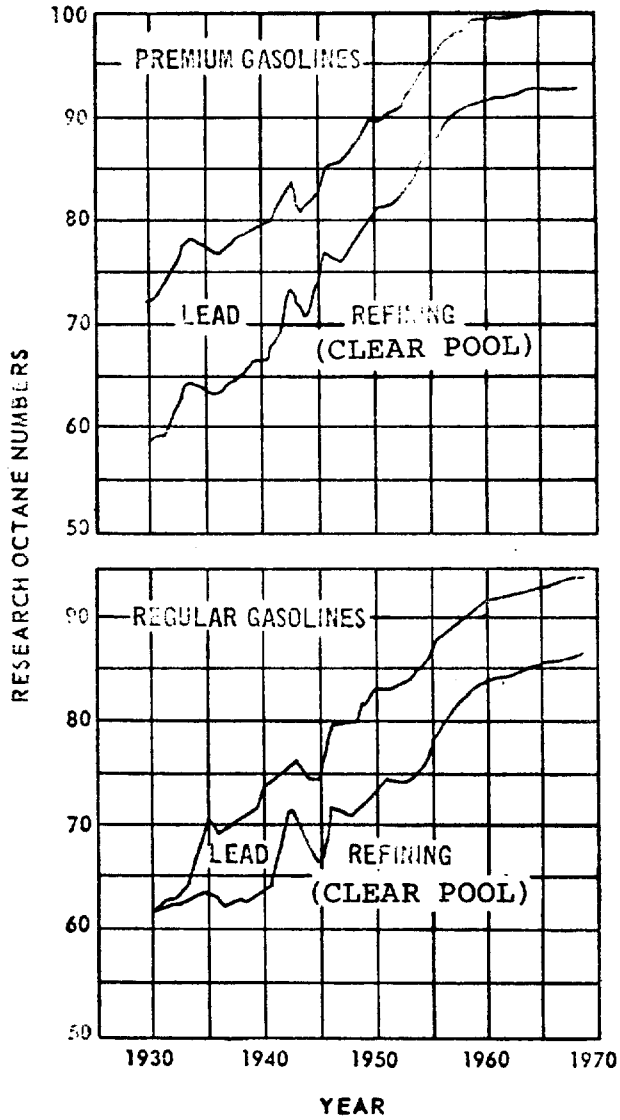

Figure 3-3. Historical source of octane quality commercial gasolines[13]

gasoline has declined correspondingly.[11] These changes are depicted in Figure 3-4. It is noteworthy that the clear pool (unleaded) octane characteristics of premium fuel (see Figure 3-3) is essentially that required as unleaded fuel for automobiles equipped with catalytic emission control systems. The decrease in demand for premium fuel has been accompanied by an increase in demand for a lower-octane-number unleaded fuel. This trade-off can be expected to operate for only a few years, because, at its peak, the demand for premium fuel was only about 40 percent of the total passenger car market, while if the use of catalytic emission control systems that require lead-free fuel should continue, most passenger cars in operation a decade from now will require unleaded fuel.

3.1.1.1 Quantity of Lead Emitted - Total domestic annual demand for gasoline increased from about 238 Gl (6.3×10^{10} gal) in 1960 to 390 Gl (1.04×10^{11} gal) in 1975.[11] Consumption decreased slightly from 1973 to 1974, the year of the oil embargo by the Organization of Petroleum Exporting Companies (OPEC). Annual gasoline demand for the years 1960 through 1975 is depicted in Figure 3-5. Over the past decade, 70 to 75 percent of gasoline consumption is reported to have been retail sales for use in passenger cars.[11]

Use of lead in the domestic manufacture of lead alkyl gasoline additives increased from about 149 Gg (164,000 tons) in 1960 to more than 252 Gg (278,000 tons) in 1970;

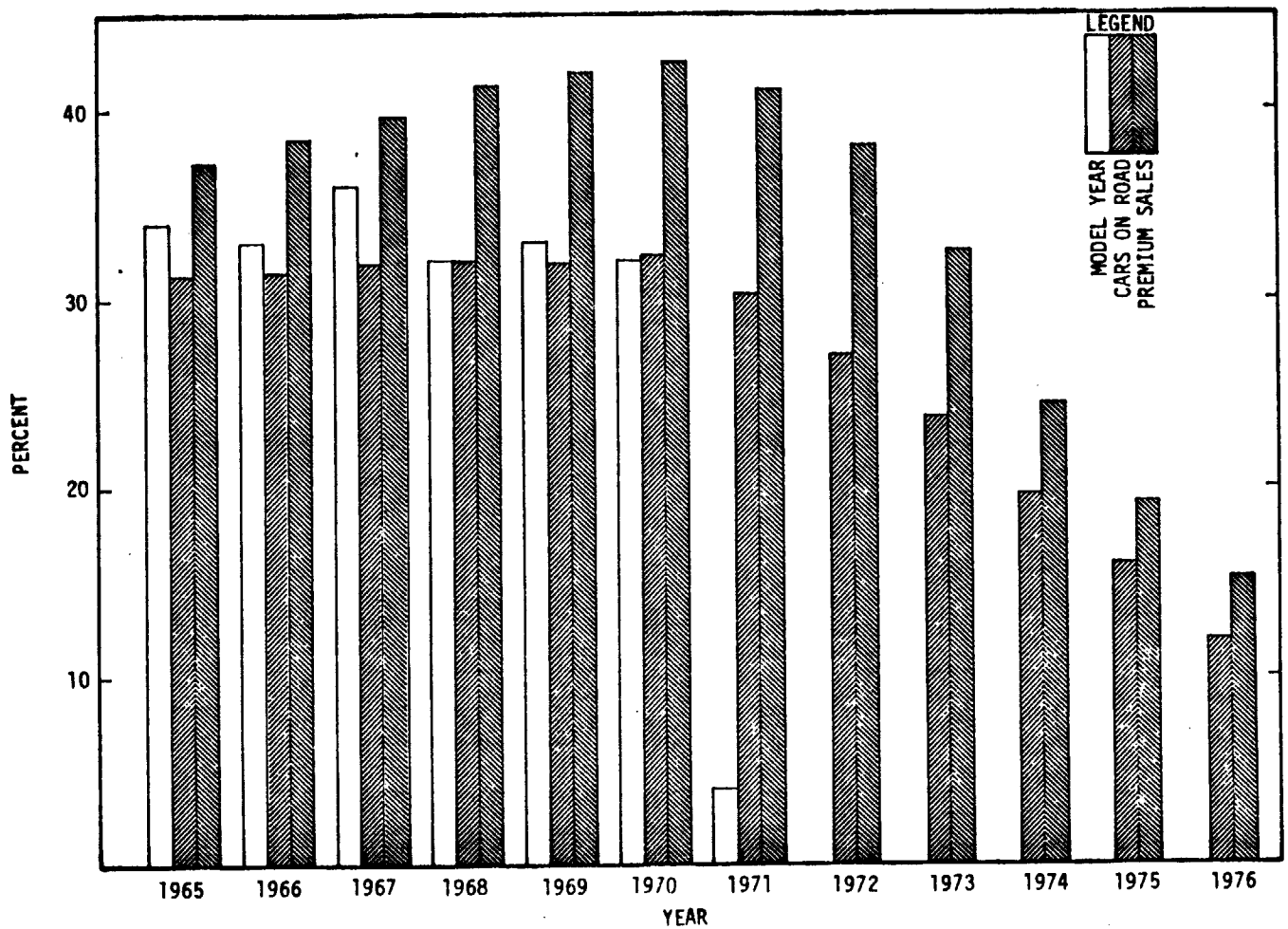

Figure 3-4. Percent of model year cars and of all cars on the road for which premium gasoline is recommended, and percent premium sales, 1965-1976.[11]

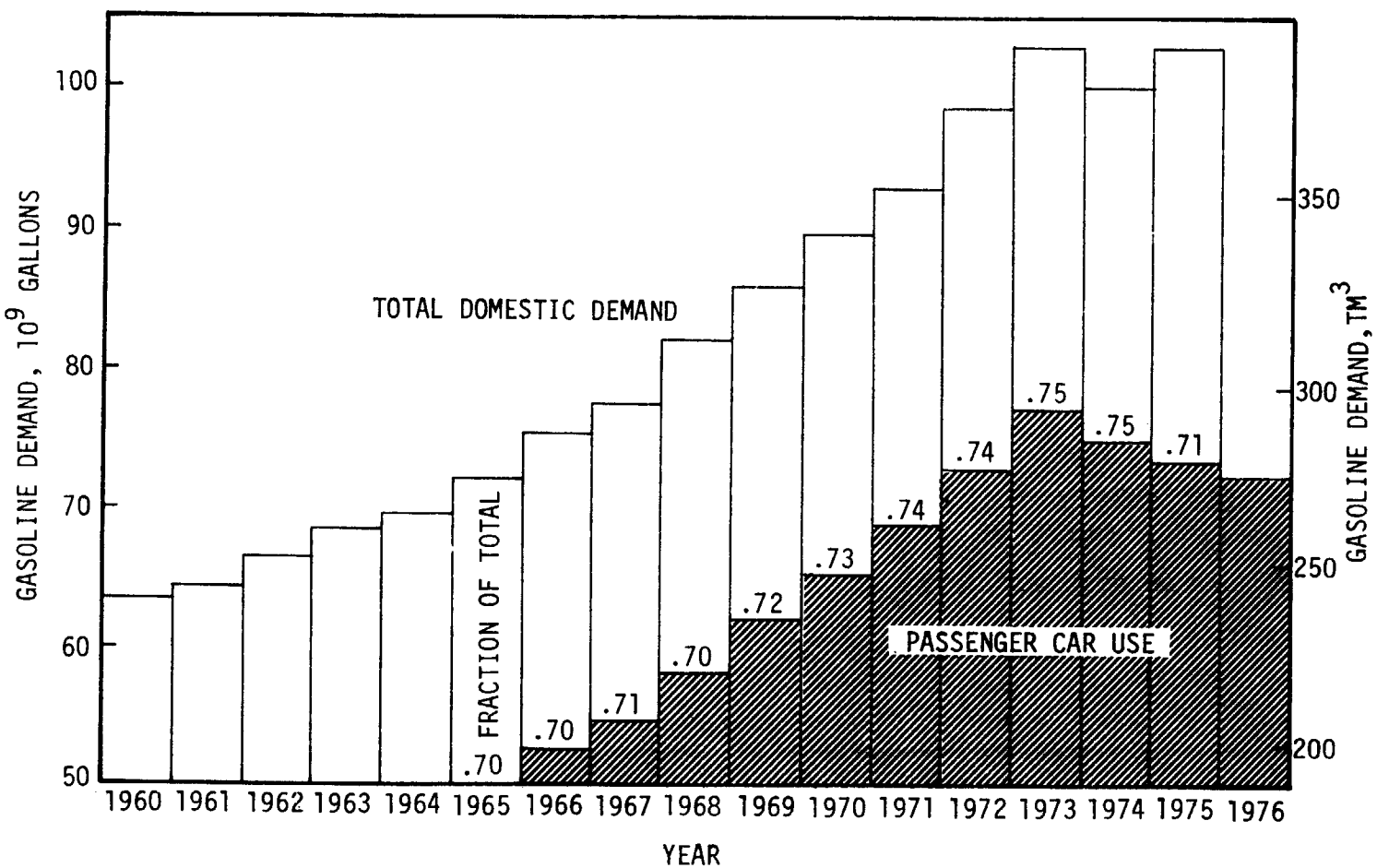

Figure 3-5. United States gasoline demand - 1960-1975[11]

use of lead for this purpose appears to have decreased since 1972.[13,15] The annual consumption of lead in manufacture of lead alkyls for the decade 1965 to 1975 is shown in Table 3-3.

Table 3-3. LEAD CONSUMPTION IN U.S. MANUFACTURE OF LEAD ALKYL GASOLINE ADDITIVES[15]

Year	Gg	tons
1965	204.28	225,203
1966	223.94	246,879
1967	224.21	247,170
1968	237.57	261,897
1969	245.94	271,128
1970	252.60	278,505
1971	239.66	264,204
1972	252.45	278,304
1973	248.92	274,410
1974	227.87	251,210
1975	189.37	208,786

In 1958, as a result of a study by a committee established at the request of the U.S. Surgeon General, the recommended maximum amount of TEL in motor vehicle fuels was set at 1057 ppm by volume (1.12 g Pb/liter or 4.23 g Pb/gal). In actual practice, this maximum lead content occurs in only a small fraction of all gasolines.

If one assumes that all lead used in the domestic manufacture of lead alkyls is for gasoline consumed in the United States, (e.g., lead losses in the manufacturing process are negligible, lead alkyl exports are negligible), the data of Table 3-3 and Figure 3-5 may be used to estimate the national average annual lead content of gasoline. Such

an exercise yields annual average values of 0.74 to 0.79 g Pb/liter (2.8 to 3.0 g Pb/gal) of gasoline for the years 1965 through 1970, and (2.4 to 2.6 g Pb/gal) for the years 1971 to 1973. A low value of 0.60 g/l (2.26 g/gal) is obtained for 1974. A 0.58 g/liter (2.2 g/gal) is mentioned as being near the national average of regular and premium fuels at that time.[21] For 1975, the calculations yield a lead content of 0.473 g/liter (1.79 g/gal). For the second quarter of 1976, the lead content of the National gasoline pool actually was 1.72 g/gal.[40]

Not all lead contained in fuel is emitted in the exhaust from a gasoline engine; some is retained in the engine, in the exhaust system, and in the crankcase oil. It was reported in 1969 that 70 to 80 percent of the lead in the gasoline is eventually discharged in the exhaust.[16] A later report, after analysis of the literature, concludes that 75 $\pm$ 4 percent of lead in fuel is the appropriate factor for automobile exhaust emissions in the Los Angeles basin.[17] If one adopts the factor 75 percent of fuel lead as particulate lead emission in automobile exhaust, then average vehicle lead emissions from vehicles can be estimated by use of data on national average miles per gallon for automobiles[11] and the lead content of the national gasoline supply. Such estimates indicate that average lead emissions from automobiles in the period 1971 through 1974 were 74 to 87 mg/km (0.12 to 0.14 g/mi).

Several reports have been made of measurements of particulate lead emissions from test automobiles. One of

these[21] shows a weighted average particulate lead exhaust emission rate of approximately 68 mg/km (0.11 g/mi) for three 1970 model Chevrolet automobiles using commercial gasoline containing 0.58 g Pb/liter (2.2 g/gal) of fuel. The automobiles were operated on a programmed chassis dynamometer according to the Federal mileage accummulation schedule. Lead was collected from exhausts with total exhaust filters over test distances of 88.5, 45.1, and 33.8 Mm (55,000 mi, 28,000 mi, and 21,000 mi). Gasoline consumption data are not reported. An assumed nominal gasoline mileage of 5.9 km/liter (14 mi/gal), however, would indicate exhaust emission of approximately 71 percent of the lead in the fuel.

The national motor vehicle exhaust emissions of particulate lead from the use of leaded gasoline can be estimated. Using the amounts of lead consumed in the manufacture of lead alkyls, an emission factor of 75 percent of fuel lead, and the assumption that all gasoline engines behave similarly to passenger car engines in the matter of lead emissions, one can calculate that the mean national annual lead emission in motor vehicle exhaust for the decade 1965 to 1974 was 191 Gg (210,000 tons). A method based on total gasoline consumption and 1.7 g Pb/gal in the gasoline pool has been used to calculate 1975 lead emissions at 128 Gg (140,900 tons).[62]

Alkyl lead vapor is probably not a significant pollutant from normal automobile operation. It can be evolved at sites where alkyl lead is produced or used and can escape to atmosphere through vents on the carburetor and fuel systems.[18] Both TEL and TML are light sensitive and undergo photochemical decomposition in the atmosphere.[18] Organic lead emissions have been identified and measured in the range of 5 to 5,000 $\mu g/m^3$ in automobile exhaust gases.[19,20] These high values were from a cold started, fully choked, and poorly tuned vehicle. More representative values of organic lead have been measured by an improved method for determining low organic lead concentrations in air.[63] Thus, concentrations of 0.04 to 0.11 $\mu g/m^3$ were found on streets, or about 0.3 to 2.6 percent of total airborne lead. At busy service stations, about 3.9 to 9.7 percent of total airborne lead was organic lead.

3.1.1.2 Size Characteristics of Particulate Emissions

Many studies of the size characteristics of lead-bearing particles in exhaust gases of engines using leaded fuels have been conducted. It is clear that the quantities and size distributions of such particles vary with fuel-use history (i.e., the use of lead and other additives in fuels), mode of operation of the engine, number of miles the vehicle has been operated, history of maintenance and component replacement of the vehicle exhaust system, exhaust gas temperature, and probably other factors as well.

The size characteristics of exhaust particulates containing lead from vehicles with conventional exhaust systems

have recently been reported in connection with studies of lead traps.[21] Table 3-4 shows results of four test runs of about 320 km (200 mi) each using gasoline containing 2.2 grams lead per gallon, the Federal Durability Driving schedule on a programmed chassis dynamometer, and the sampling method described
40 to 70 percent of the particulate lead emitted was in particles having equivalent diameters less than 1 μm. Overall these data yield a mass median equivalent diameter less than 1 μm.

In studies of the influence of exhaust gas temperature on particle characteristics, a mass median equivalent diameter of about 0.15 μm was found for particles in diluted room-temperature exhaust gases from combustion of leaded fuel.[23] About 80 percent on weight of the particles were smaller than 1.7 μm; since essentially none were in the size range 1.7 to 5.0 μm, the remaining 20 percent were of size greater than 5 μm. The authors suggest that the particles greater than 5 μm result from reentrainment of material deposited in the exhaust system. The data reported were obtained with a 5.74 liter (350 CID) engine operated on an engine dynamometer at 25 m/s (55-mph) cruise conditions using fuel containing 0.8 ml TEL/liter (800 ppm by volume).

Size distribution of particles in high-temperature exhaust gases from combustion of both leaded and unleaded fuels has been examined.[24] The concentrations of particles greater than 0.35 μm aerodynamic diameter were relatively

Table 3-4. LEAD PARTICLE SIZE DISTRIBUTION FROM VEHICLES WITH CONVENTIONAL MUFFLERS.

Fuel: 0.6 g Pb/liter (2.2 g Pb/gal)

Federal Durability Driving Schedule[21]

Engine size		Distance travelled at test		Lead emissions particle size (μm)								
				> 9 μm			1-9 μm			< 1 μm		
Litre	(CID)[a]	Mm	10^3 mi	mg/km	g/mi	%	mg/km	g/mi	%	mg/km	g/mi	%
1.61	(98)[b]	32.2	20	12	0.019	20	11	0.018	19	37	0.060	62
1.61	(98)[b]	82.1	51	8	0.013	11	9	0.016	14	54	0.088	75
5.74	(350)[c]	45.1	28	26	0.042	38	15	0.025	23	28	0.045	40
5.74	(350)[c]	88.5	55	21	0.033	33	12	0.019	19	30	0.048	48

[a] Cylinder displacement; CID = cubic inches of displacement.

[b] Same vehicles.

[c] Different vehicles.

low and approximately equal for unleaded and leaded fuels; the concentration of particles less than 0.35 μm aerodynamic size from leaded fuel far exceeded those of the same size from unleaded fuel. The results are summarized in Table 3-5.

Table 3-5. DISTRIBUTION OF PARTICLE SIZES IN EXHAUST AT 260°C (500°F) FROM LEADED AND UNLEADED FUEL. 5.74 Liter (350 CID) Engine At 25 M/S (55-MPH) Cruise Condition.

Fuels: Leaded Standard Regular And Indolene Clear[24]

	Concentration of particles, aerodynamic diameter			
	>0.35 μm		<0.35 μm	
	g/m^3	gr/ft^3	g/m^3	gr/ft^3
Unleaded fuel	1.6	0.71	1.2	0.52
Leaded fuel	1.7	0.75	18.0	8.0

As the authors state, these results imply that lead compounds exhausted as particulate matter are mostly in particles smaller than 0.35 μm aerodynamic diameter. It is recognized that lead particles that deposit on the walls in conventional exhaust systems occasionally flake off and appear in the exhaust gases as particles of larger size. The high-temperature samples described here were collected from a special exhaust system by means of a high-temperature Andersen stack sampler and glass fiber filters; the 5.74 liter (350 CID) engine was operated on an engine dynamometer to simulate 25 m/s (55-mph) cruising road load.

Size distributions were determined for particles in engine exhaust gases in work done for the Environmental Protection Agency by the Dow Chemical Company.[25] The size distributions of exhaust lead particulates were reported for 18 test runs, 15 of which were made with 5.74 liter (350 CID) engines on an engine dynamometer. Of these 15 runs, 12 simulated 30 m/s (60-mph) cruise and three were with the Dow cycle. Two tests were run with 6.55 liter (400 CID) engines on an engine dynamometer and one with a vehicle having a 5.74 liter (350 CID) engine and operated on a chassis dynamometer; these three runs all simulated 30 m/s (60-mph) steady-state operation. Engines were equipped with exhaust pipe, conventional muffler, and tail pipe, and particle size samples were obtained with Andersen samplers and filters from an exhaust dilution system similar to that in reference 22. Hours of past operation or equivalent mileage for the test engines and exhaust systems at the time of test are not reported. Thirteen test runs were made with fuels containing 0.70 to 0.79 ml TEL/liter (700 to 790 ppm by volume); 11 of these yielded mass median equivalent diameters of 0.1 μm or smaller for lead particulates; the other two tests yielded values of 0.35 and 2.0 μm. One test with 0.40 ml TEL/liter (400 ppm by volume) gave a mass median equivalent diameter of 3.1 μm for leaded particles. Fuels with no more than a trace of TEL yielded mass median equivalent diameters of 0.1, 1.2, 1.35, and 1.5 μm for lead in four tests. These data indicate that leaded fuels tend to generate lead

exhaust particles having mass median equivalent diameters of about 0.1 μm or less under high-speed steady-state operating conditions. One may suspect that under the conditions of test described here relatively little lead particulate was reentrained from exhaust system deposits.

Size distribution data have been reported[26] for particulate lead emitted from three production vehicles at various mileages. Results are given in Table 3-6. Samples were obtained over test runs of about 322 km (200 mi) each using the dilution method of reference 22. Data for the first vehicle listed in Table 3-6 (1966 Chevrolet) appear to be those reported earlier in references 27 and 28 and used later to illustrate the decrease in emissions of < 0.3 μm lead particles and the increase in > 9 μm lead particles with increase in vehicle mileage.[29] This tendency is apparent also, perhaps not quite so clearly, in data for the other two vehicles. The differences in low-mileage (4.8 - 8.0 Mm, 3000-5000 mi) and high-mileage (26-88 Mm, 16,000-55,000 mi) emissions of large lead particles (> 9 μm) are about a factor of two, both in absolute rate and in percent of lead emissions. The differences are less marked for small particles, those less than 1 μm; low-mileage emissions for this series of tests were about 1.3 times greater than those for higher mileages. Overall, the average values for all three vehicles, regardless of mileage, suggest that about 40

Table 3-6. LEAD PARTICLE SIZE DISTRIBUTIONS FOR THREE PRODUCTION VEHICLES

Fuel: 0.5 to 0.75 g Pb/liter (2 to 3 g Pb/gal)

Federal Durability Driving Schedule[26]

Engine	Distance travelled at test		Lead particle emissions equivalent diameter											
			> 9 μm			1-9 μm			< 1 μm			< 0.3 μm		
	Mm	10^3 mi	mg/km	g/mi	%	mg/km	g/mi	%	mg/km	g/mi	%	mg/km	g/mi	%
1966 Chevy	8.05	5	17.4	0.028	27	18.0	0.029	28	28.6	0.046	45	19.3	0.031	30
5.36 liter	25.9	16	23.0	0.037	39	14.9	0.024	25	21.1	0.034	36	14.9	0.024	25
(327 CID)	33.8	21	22.4	0.036	43	10.6	0.017	20	18.6	0.030	36	13.6	0.022	27
	45.1	28	41.0	0.066	57	17.4	0.028	24	13.6	0.022	19	8.1	0.013	11
1969 Ford	4.83	3	5.0	0.008	21	5.0	0.008	21	13.6	0.022	58	11.8	0.019	50
5.75 liter	32.2	20	16.8	0.027	47	6.2	0.010	18	12.4	0.020	35	9.3	0.015	26
(351 CID)	88.6	55	14.9	0.024	49	5.0	0.008	16	10.6	0.017	35	9.3	0.015	31
1970 Engine	4.83	3	9.3	0.015	18	14.3	0.023	28	27.3	0.044	54	19.3	0.031	38
5.74 liter	32.2	20	34.8	0.056	46	13.6	0.022	18	27.3	0.044	36	17.4	0.028	23
(350 CID)	88.6	55	10.6	0.017	33	5.0	0.008	15	16.8	0.027	52	13.6	0.022	42
Overall vehicle average					37			21			41			31

percent of the lead particles emitted have equivalent diameters greater than 9 μm, 40 percent less than 1 μm, and 20 percent between 1 and 9 μm. About 30 percent of the emitted particles appear to have equivalent diameters less than 0.3 μm.

On the basis of tests with 1966 model automobiles with stabilized exhaust deposits during the lifetime of a car about 35 percent of the lead burned is emitted as fine particles and about 40 percent as coarse.[30] Fine particles are identified generally as those having equivalent diameter of about 0.5 μm and less; coarse particles are those with equivalent diameter about 5 μm and greater. These investigations showed very few particles in the range of 0.5 to 5.0 μm. The 26 test cars were operated on the seven-mode Federal cycle, and samples were obtained with a cyclone-filter assembly attached directly to the tail pipe of the car; lead content of the fuel used for particle size samples was not given, but, based on other investigations also described one may speculate that the fuel contained about 0.8 ml TEL/liter (800 ppm by volume). Federal cycle tests, weighted 35 percent cold and 65 percent hot, yielded fine-particle emissions of 32 mg/km (0.051 g/mi) and coarse-particle emissions of 17 mg/km (0.028 g/mi). These results agree remarkably well with those reported in References 26 and 27 when one considers the differences in sampling technique and vehicle operating mode.

Early studies yielded markedly different results for sizes of lead particles emitted from automobiles. For example, one reported that for an average car with 53 Mm of use (33,000 mi) about 25 percent of lead emissions were in particles smaller than 1 μm.[28] Another reported that 90 percent of weight of exhausted lead is contained in particles smaller than 0.5 μm.[31] Such disagreement may be due to many factors including the type of fuel used, the operating mode or driving cycle, both the long-term and the immediate past operating history of the exhaust system, and the sampling and analytical methods.

Several conclusions about the size of lead particles emitted by motor vehicles using leaded fuel can be drawn from these investigations:

1. Most of the lead generated by engines burning leaded fuel is in particles of submicron size, with mass median equivalent diameters in the order of < 0.1 to 0.3 μm.[23,24,25]

2. Lead compounds accumulate in crankcase oil and on components of the engine and exhaust system. Over the life of an automobile about 75 percent of the lead in the fuel is emitted as particulate matter in the exhaust.[17,27,30]

3. In general, 40 to 75 percent of the lead emitted from production vehicles in typical operation modes is in fine particles, ie., in particles having equivalent diameter of less than 1 μm.[23,26,30] This suggests that, on the average, 35 to 40 percent of lead in fuel is emitted as fine particulate. About an equal amount (35 to 40 percent) must then be emitted as coarse particles. The emission rate of coarse particles is greatly influenced by reentrainment of lead compounds that

have been deposited in the exhaust and is highly variable; fine particles are likely to be those emitted directly from the engine and at a rate more uniform than that of large-particle emission.

3.1.1.3 Composition of Particulate Emissions - When lead alkyl compounds are burned, lead oxide is formed. This compound has a high melting point and is almost nonvolatile at combustion-chamber temperatures.[32] To reduce the tendency of lead oxide to build deposits in automobile engines, commercial antiknock fluids include halogen compounds that scavenge the lead deposits from the engine. The most commonly used commercial antiknock fluids contain ethylene dichloride and ethylene dibromide in a molar ratio of 2 to 1, and in amounts required to react with all the lead present in the fluid.[33]

The reason for adding ethylene dihalides to TEL is evident from the vapor pressure curves shown in Figure 3-6. These curves show that the vapor pressures of lead halides are much greater than those for lead and lead oxide; the high volatility of the lead halides tends to carry such lead compounds out of the power train. Lead removal is also aided by the lower melting points of lead compounds similar to those in engine exhausts. Melting points of several lead compounds are shown in Table 3-7.

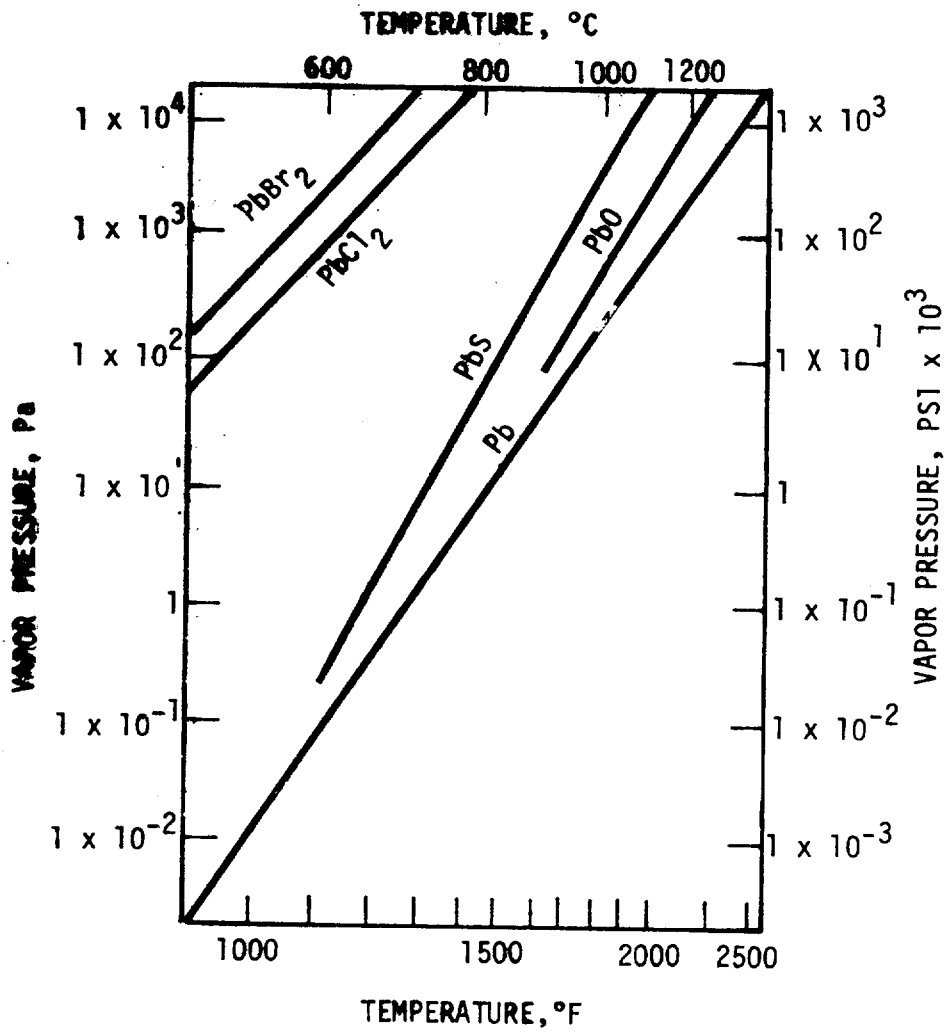

Figure 3-6. Vapor pressure of lead compounds.

Table 3-7. MELTING POINTS OF SELECTED LEAD COMPOUNDS[34,35]

Compound	Melting point, °C	°F
PbBrCl	425-436	797-817
$PbBr_2$	371	700
$PbCl_2$	499	930
$PbO \cdot PbBr_2$	328-890	622-1634
$PbO \cdot PbCl_2$	482-977	900-1790
PbO	888	1630
$PbSO_2$	999-1093	1830-2000

The principal inorganic lead compound in the exhaust from engines burning leaded fuel with halogen scavengers is generally reported to be PbClBr.[21,28,30,36] Table 3-8 shows the reported composition of lead compounds recovered from a lead trap from a vehicle operated on gasoline containing 0.58 g Pb/liter (2.2 g/gal). These compounds account for about 84 percent of potential particulate lead exhaust emissions from the vehicle.[21]

Table 3-8. COMPOSITION OF LEAD DEPOSITS FROM A LEAD TRAP

Fuel: 0.58 g Pb/liter (2.2 g Pb/gal)[21]

Compound	Weight, %
PbBrCl	54
$PbSO_4$	19
$PbBr_2$	11
$Pb_3(PO_4)_2$	3
PbO	13
Total	100

Composition of lead particles emitted in engine exhaust has been shown to be related to particle size. Studies of emissions from vehicles operated on fuel containing 0.71 to 0.79 g Pb/liter (2.7 to 3 g Pb/gal) yielded a number of findings including the following:[28]

> "Very large particles of greater than 200 microns have a composition similar to exhaust system deposits confirming that they are reentrained or flaked material. These particles contain approximately 60 to 65 percent lead salts, 30-35 percent Fe_2O_3, and 2 to 3 percent soot and carbonaceous material. The major lead salt is PbBrCl with large amounts of PbO (15 to 17 percent) occurring as 2 PbO·PbBrCl double salt. Lead sulfate and lead phosphate account for 5 to 6 percent of these deposits (low sulfur and low phosphorous fuel).
>
> "PbBrCl is the major lead salt in particles of 2 to 10 microns equivalent diameter with 2 PbBrCl·NH_4Cl present as a minor constituent.
>
> "Submicron lead salts are primarily 2 PbBrCl·NH_4Cl.

"Lead halogen molar ratios in particles of less than 10 microns equivalent diameter indicate that much more halogen is associated with these solids than the amount expected from X-ray identification of 2 $PbBrCl \cdot NH_4Cl$. This is particularly true for particles in the 2 to 0.5 micron size range.

"Only small quantities of 2 $PbBrCl \cdot NH_4Cl$ was found in samples collected at the tail pipe from the hot exhaust gas. Its formation, therefore, mainly takes place during cooling and mixing of exhaust with ambient air."

These results agree generally with the earlier work reported in reference 36 on the nature of particulate lead emissions from motor vehicles.

Studies of exhaust lead particle composition as a function of exhaust gas temperature from an engine using fuel containing 0.79 ml TEL/liter (790 ppm of volume) yielded somewhat different results; the principal lead halide compound identified was $PbCl_2 \cdot PbClBr$ rather than PbClBr.[23] $PbCl_2 \cdot PbClBr$ was identified as the principal lead component throughout the size spectrum (submicron to 10-20 μm aerodynamic diameter) for samples of exhaust taken at temperatures of 35°C (95°F) and 243°C (470°F); this compound is not reported for samples taken at temperatures of 338°C (640°F) samples. Lead-ammonium halides were not found in samples taken directly from the engine exhaust stream; this is consistent with the conclusion reported in reference 28 that formation of 2 $PbBrCl \cdot NH_4Cl$ takes place mainly during cooling and mixing of exhaust with ambient air.

In summary, it can be concluded that lead halides are the principal inorganic lead compounds emitted in the exhaust of vehicles using leaded fuel with halide scavengers. Lead-ammonium halides, although not emitted directly from the engine, are a common constituent of exhaust gases after dilution with ambient air. Lead oxhalides, lead oxides, lead sulfates, and lead phosphates also result from use of leaded fuels; these compounds are more likely to be found in particles of larger size than in submicron particles.

3.1.2 Control Techniques

A direct means for controlling the quantity of lead emitted from motor vehicles is to reduce or eliminate the addition of lead antiknock compounds to gasoline. Another means is to capture lead compounds from exhaust gases prior to their release to the atmosphere from vehicles burning leaded fuel. Other techniques also are available, including the use of unleaded fuels other than gasoline and the use of motive power units other than internal combustion engines. Such techniques are discussed in AP-66, Control Techniques for Carbon Monoxide, Nitrogen Oxide, and Hydrocarbon Emissions from Mobile Sources.[37]

3.1.2.1 Lead in Fuels - Section 211 of the Clean Air Act[38] provides that the Administrator of the Environmental Protection Agency may, by regulation, control or prohibit the

manufacture or sale of any fuel or fuel additive for motor vehicle use if any emission products of the fuel or additive will (1) endanger public health or welfare, or (2) significantly impair the performance of any emission control device which is in general use or which would be in general use with regulation of fuel or additive. Federal Regulations controlling the lead content of gasoline have been promulgated under this authority.[39] Regulations were promulgated January 10, 1973, to ensure that lead-free gasoline would be available to owners of automobiles equipped with catalytic converters. The regulation required that gasoline stations selling more than 757 m^3 (200,000 gal) annually offer unleaded gasoline by July 1, 1974; subsequent amendments require availability of unleaded gasoline at smaller stations serving areas of low population density.

The most recent amendment to the Fuel Regulations eliminates the interim phase-down levels prior to January 1, 1978 and the specified levels and effective dates as shown in Table 3-9. The Environmental Protection Agency made these amended regulations effective as of September 28, 1976.[40]

Table 3-9. AMENDED FUEL ADDITIVE REGULATIONS AS OF SEPTEMBER 28, 1976[39,40]

Effective date	Maximum average lead content, g Pb/liter	Pb/gal
January 1, 1975[a]	0.45[a]	(1.7)[a]
January 1, 1976[a]	0.37[a]	(1.4)[a]
January 1, 1977[a]	0.26[a]	(1.0)[a]
January 1, 1978	0.21	(0.8)
October 1, 1979	0.13	(0.5)

[a] Eliminated, as amended on September 28, 1976.

Total gasoline use in the United States for the period 1960 through 1967 showed a remarkably uniform rate of increase of 3 percent per year; for the period 1967 through 1973 use increased 4.9 percent per year.[11] Consumption in 1974, the year of the OPEC embargo, was less than in 1973, but that in 1975 was about 3 percent greater than in 1974. Predictions of future gasoline use are uncertain. Over the next decade, however, in the absence of major international political interventions that would interrupt supplies, it is reasonable to assume that the rate of increase in gasoline use will be 0 to 5 percent per year.

The average lead content of motor gasoline in 1974 is estimated to have been about 0.60 g/liter (2.26 g/gal). The

summer 1976 pool average is estimated to be in the range 0.37 to 0.50 g Pb/liter (1.4 to 1.9 g Pb/gal);[40] since lead levels in gasoline for summer use are typically 0.05 to 0.08 g/liter (0.2 to 0.3 g/gal) greater than those for winter use, the 1976 annual average may be lower than the summer values, and not far from the 0.37 g/liter (1.4 g/gal) total pool average sought by the regulations for 1976. Assuming the time-phased reduction in the lead content of motor gasoline at the levels for 1977 and later years, reduction of total lead use from the 1974 estimated level would result, as shown in Figure 3-7.

Automobile manufacturers have adopted catalytic reactor systems as the means to meet regulations on emissions of carbon monoxide, hydrocarbons, and oxides of nitrogen. Catalysts currently available and in use for these systems are adversely affected by lead in the fuel. As a result, more than 75 percent of the 1975 model year and all of the 1976 model year automobiles produced in the United States require nonleaded gasoline. As the number of vehicles that require nonleaded gasoline increases, the amount of lead used overall in the manufacture of gasoline will decrease. Estimates of future use of motor vehicles based on reports of past experience permit prediction of future lead use in passenger car gasoline. Such predictions, based solely on

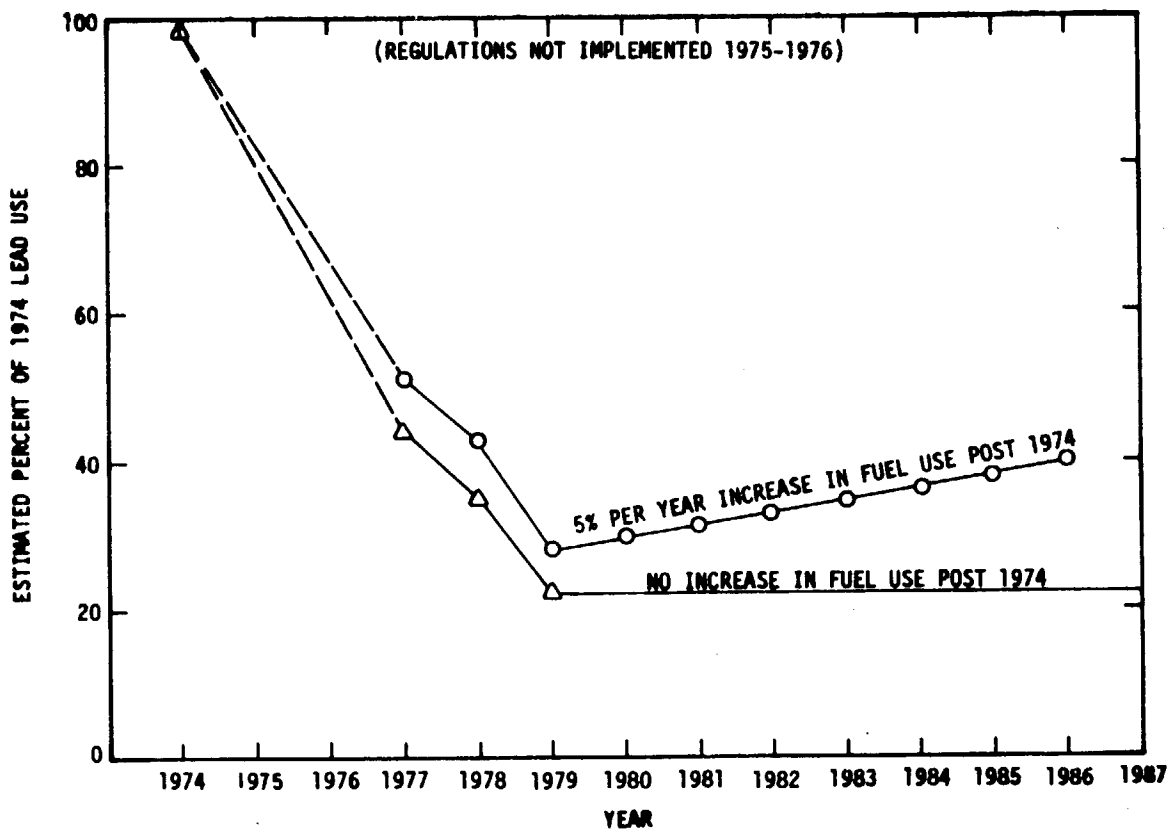

Figure 3-7. Predicted reduction in lead use in gasoline from estimated 1974 level based on Federal fuel additive regulations[39] and gasoline use increases of 0 and 5 percent per year.

use requirements for nonleaded fuel and neglecting any effect of the time-phased reduction of lead in the total gasoline pool, are depicted graphically in Figure 3-8. These predictions are based on several assumptions:

1. Pre-1975 model automobiles will use fuel having the 1974 average lead content.

2. 1975 and later model year automobiles will use nonleaded fuel.

3. Future vehicle use patterns will be similar to past experience with regard to annual miles of use versus vehicle age[40] and distribution of numbers of vehicles in use by vehicle age.[41]

4. Average fuel economy by model year remains constant.

It is recognized that these assumptions will not be valid for the future; estimates based upon them, however, provide insights into the nature of changes in lead use that can be expected from the use of nonleaded gasoline. Note that passenger vehicles consume 70 to 75 percent of all gasoline.

Figure 3-8 entails fuel-use increases of 0 and 5 percent per year over 1974 levels. Curves A-B represent fuel lead use if all post-1974 model years continue to require nonleaded fuel. Curves C-D represent the increase in lead use that could occur if emissions control technology that is tolerant of fuel lead should be adopted for all 1980 and later model years and fuel lead at 1974 concentrations should be used in these vehicles. The increases depicted in

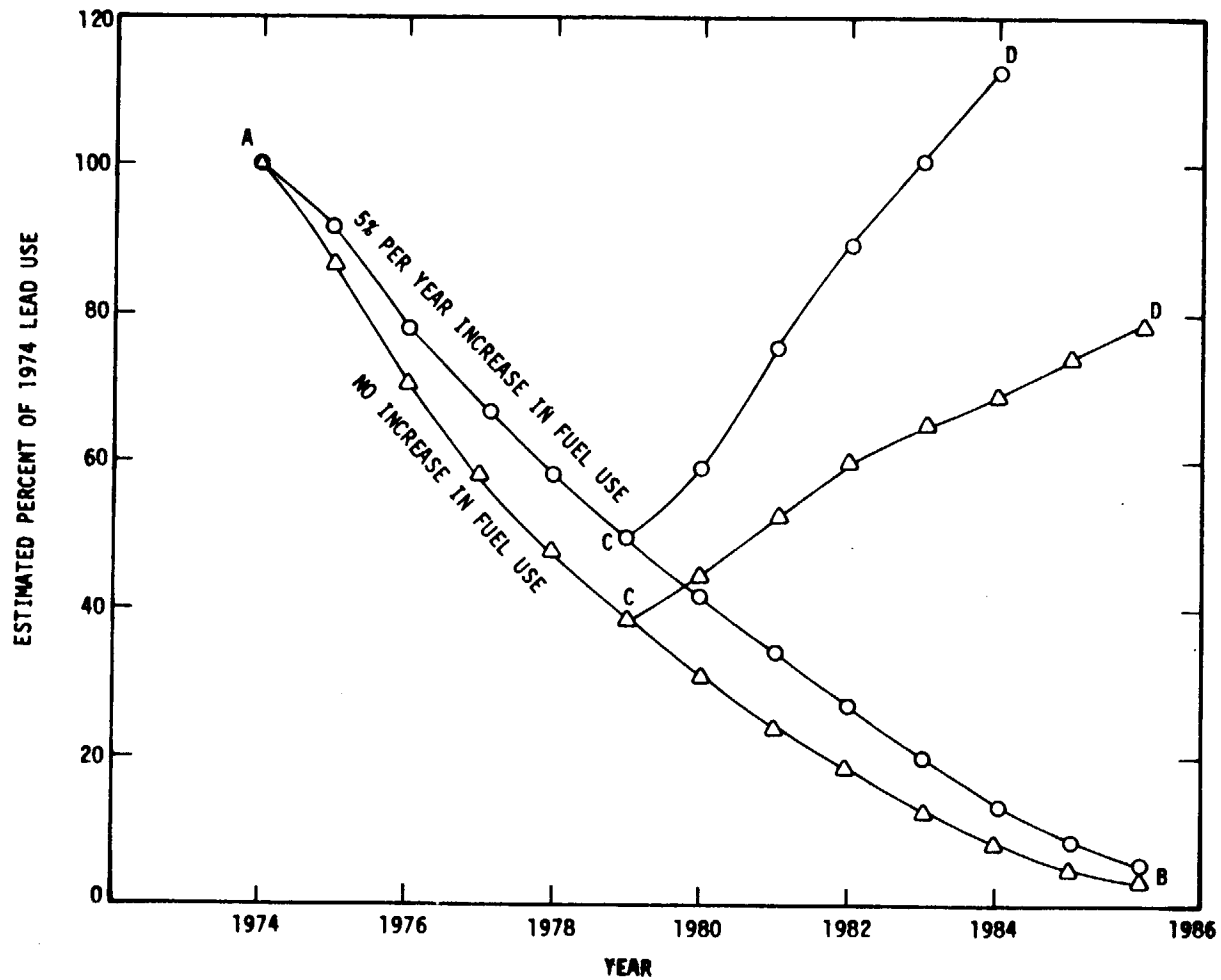

Figure 3-8. Projected lead reduction from 1974 level resulting from the use of nonleaded fuel in 1975 and later model year automobiles. Curves C-D are for resumption of use of leaded fuel at 1974 concentration for all 1980 and later model years.

curves C-D represent a possible use pattern in the absence of a time-phased reduction in lead content of the total gasoline pool.

Examination of Figures 3-7 and 3-8 assuming time-phased reduction, suggests that the lead content in the total gasoline pool will be the effective limit on use of lead in gasoline until about 1982, even if all new vehicles should require nonleaded gasoline. Should lead-tolerant emissions control technology be adopted, regulation of the lead content of gasoline could continue to be the factor controlling use of lead for this purpose even after 1982. The relative effectiveness of fuel regulation is further emphasized by the fact that it is applicable to the total gasoline pool whereas the operational requirement for nonleaded fuel is imposed only on those vehicles (currently light-duty vehicles) requiring catalytic emissions control systems.

3.1.2.1 Gasoline Substitutes

Light hydrocarbon fuels have a high octane number without lead and can be used for fuel in spark-ignited internal combustion engines.

Table 3-10 compares the properties of compressed natural gas (CNG), liquified natural gas (LNG), and liquified petroleum gas (LPG) with those of gasoline. These gasoline substitutes have the advantage of high octane rating without lead; they also have excellent air-mixture-distribution characteristics, offering a potential for lean

engine operation and thus for a reduction in emissions. These three fuels also involve special handling and servicing requirements that will limit their attractiveness for use in captive fleets. The limited supply and the distribution problems are further impediments to their universal use.

3.1.2.2 Particulate Collection Devices - Noble-metal catalyst systems currently in use on new automobiles for control of gaseous pollutants require nonleaded fuel. The development and adoption of thermal converters, lead-tolerant catalysts, or other such means for satisfying emission limits for gaseous pollutants, however, may make the use of leaded fuels in future motor vehicles technically feasible. Most of the lead emitted in exhaust streams from vehicles using leaded gasoline is particulate; should lead-tolerant emissions control systems be adopted, particulate collection devices represent an alternative to regulation of lead in fuels for the control of lead emissions from motor vehicles.

A number of approaches to particulate removal and their applicabilities to engine exhaust systems have been explored. Such techniques include filtration, impingement, agglomeration, adsorption, and thermal precipitation. Collection devices should have the capacity to collect small particles, i.e., those under 1 μm in diameter, and they should require only simple and infrequent maintenance.

Table 3-10. COMPARISON OF PROPERTIES OF CNG, LNG, LPG, AND GASOLINE

	CNG	LNG	LPG	Gasoline
Typical composition	Methane, 90% Ethane, 10%	Methane, 90% Ethane, 10%	Propane, 95% Propylene, 5%	C_4 to C_{12} hydrocarbons
State of fuel as stored on vehicle	Gas	Liquid[a]	Liquid	Liquid
Pressure as stored on vehicle, kPa (psi)	13.8 (2,000)	0.21-0.41 (30-60)	1.4 (200)	Atmospheric
Weight as stored on vehicle, kg/liter (lb/gal)	0.1 (1.4)	0.43 (3.6)	0.50 (4.2)	0.73-0.78 (6-6.5)
Heat content as stored: mJ/liter (Btu/gal)	8.4 (30,000)	21.5 (77,000)	23.3 (83,500)	32.2 (115,800)
Specific gravity of vapor at STP (air = 1)	0.55	0.55	1.55	4.25
Self-ignition temperature, °C (°F)	705 (1,300)	705 (1,300)	510 (950)	460 (860)
Stoichiometric A/F, by weight	17	17	15.7	15
Octane number (RON)	100+	110+	110+	90-100

[a] Temperature, -161°C (-258°F)

Most reported work has been on inertial or impingement type devices. One such device, reported to be relatively simple, low in cost, and muffler-like in appearance was described in 1970.[43] Two parallel cyclone elements were arranged to handle the exhaust in one element under light load and in both elements under high load. A prototype was road-tested for 57.9 Mm (36,000 mi) and reductions of up to 47 percent of exhaust lead were claimed. No information is included on the reduction of particles smaller than 5 μm when an improved unit was driven similarly for 38.6 Mm (24,000 mi), reductions of 64 percent were claimed.

A more complex device consists of an interceptor in conjunction with an inertial device. The interceptor contains loose material for impingement and growth of particles, which then migrate to the inertial device. Reductions in exhaust lead of 70 to 90 percent are claimed, but the performance for fine particles is not stated.

An Inter-Industry Emission control (IIEC) study of the feasibility of protecting catalytic exhaust treatment equipment by trapping lead close to the engine to conserve heat for the catalytic oxidation reactors was also reported in 1970.[44] In tests of a few hours, lead retention was as high as 70 percent. In longer runs of up to 17.6 Mm (11,000 mi), however, lead retention in the trap was poor. The traps

were of the filter type; about ten filter materials were tested, of which activated alumina was the most effective. Higher filter temperatures favored lead retention. Potentially serious problems were high filter back-pressure and high heat-capacity effects of the filter assembly. The latter effect increases the difficulty of maintaining gas temperature, especially during cold starts. Insufficient work was done to prove feasibility.

Since 1970 E. I. DuPont DeNemours and Company, Inc., has developed and tested a muffler lead trap for motor vehicles use. This device is illustrated in Figure 3-9. In tests involving a variety of operating conditions and using fuels with lead content ranging from 0.53 to 0.79 g/liter (2 to 3 g Pb/gal), this collector is reported to reduce total lead emissions by 80 to 90 percent and air (suspendible) lead emissions by some 70 percent.[21,45] One vehicle, operated in a road test of 162.8 Mm (101,000 mi) with the lead trap, showed a reduction of 83 percent in total lead emissions compared with emission from a companion vehicle equipped with a conventional muffler and operated over the same mileage; there was no deterioration in performance of the lead trap with increasing mileage.[21] It is also reported that use of the lead trap causes no adverse effect upon performance of automobiles. Lead emissions from one vehicle, a 1970 Chevrolet with 5.74 liter (350 CID) engine, equipped with

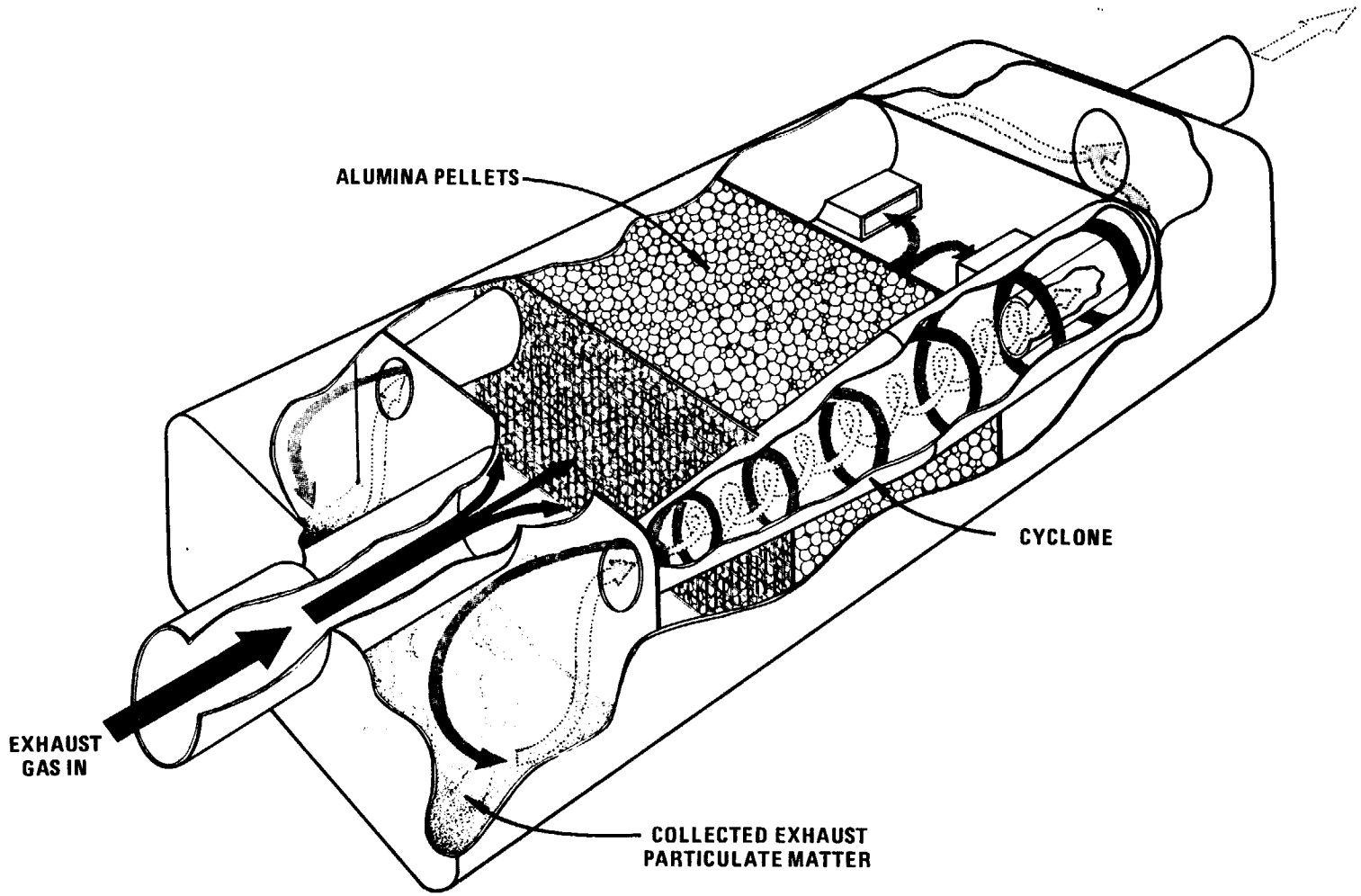

Figure 3-9. DuPont muffler lead trap.[45] (Courtesy of E.I. DuPont DeNemours Co., Inc.)

the DuPont lead trap, were measured by four different laboratories (DuPont, Dow, Ethyl, Exxon) using the 1972 CVS, 1975 CVS, and seven-mode Federal Test cycles and gasoline containing 0.58 to 0.71 g Pb/liter (2.2 to 2.7 g Pb/gal). The results were remarkably consistent, with a test mean emission rate of 12 mg Pb/km (0.019 g Pb/mi) and a range of 11 to 13 mg/km (0.017-0.021 g/mi) for the six tests reported.[21]

The Ethyl Corporation has developed an agglomerating and inertial type device called the Tangential Anchored Vortex Trap (TAV trap). This device is illustrated in Figure 3-10. Tests of five vehicles equipped with the TAV trap and operated in the range 9.7 to 80.5 Mm (6000 to 50,000 mi) (mean vehicle test mileage 38.9 Mm or 24,200 mi) showed an average 78 percent reduction in lead emissions relative to those of 11 vehicles with standard exhaust systems operated an average of 44.7 test Mm (27,800 mi).[46] Emissions of total particulates, both lead and nonlead compounds, were reduced by an average of 72 percent. Lead emissions by size range for two TAV traps have been reported; the reduction in emissions of particles greater than 0.4 μm mass median equivalent diameter was 83 percent, and reduction in those less than 0.4 μm was 72 percent.[42] Since the overall reduction indicated by the size distribution test is greater than the mean value for the more ex-

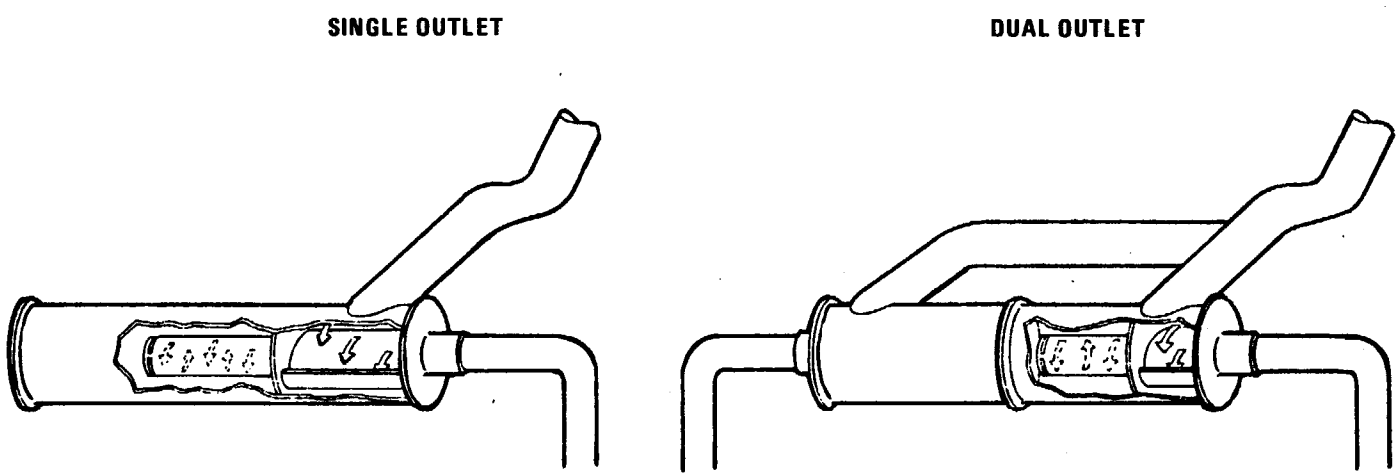

Figure 3-10. Ethyl corporation tangential anchored vortex traps construction features.[46] (Courtesy of the Ethyl Corporation)

tensive emissions road tests, the absolute values may be questioned. The results suggest, however, that the device is effective in collection of submicron as well as larger particles. Tests of the unit with an additional final filter stage showed emissions reductions of 93 to 94 percent for total and airborne lead.

PPG Industries, Inc., has developed a motor vehicle exhaust particulates collection device consisting of an agglomerator, an inertial separator, and a fiberglass filter unit. This system is illustrated in Figure 3-11. Reported test results show lead emissions of 1 to 2 mg/km (0.002 to 0.004 g/mi), representing 93 to 96 percent reduction in suspendable lead emissions.[47] Lead emission values are listed for nine test automobiles having a mean accumulated mileage of 51.5 Mm (32,000 mi), mileage for individual vehicles ranging from 8.05 to 80.5 Mm (5,000 to 50,000 mi). The mileage accumulation schedule is not reported; the test fuel, not reported either, is assumed to be commercial leaded gasoline. It is reported that particulate removal efficiency of the agglomerator-inertial separator unit when used without the filter unit is 65 to 75 percent.[47]

Laboratory studies have been done on the effectiveness of thermal precipitation and sonic agglomeration in collecting lead aerosols similar to those generated by spark ignition engines using leaded fuels.[48] Studies of thermal

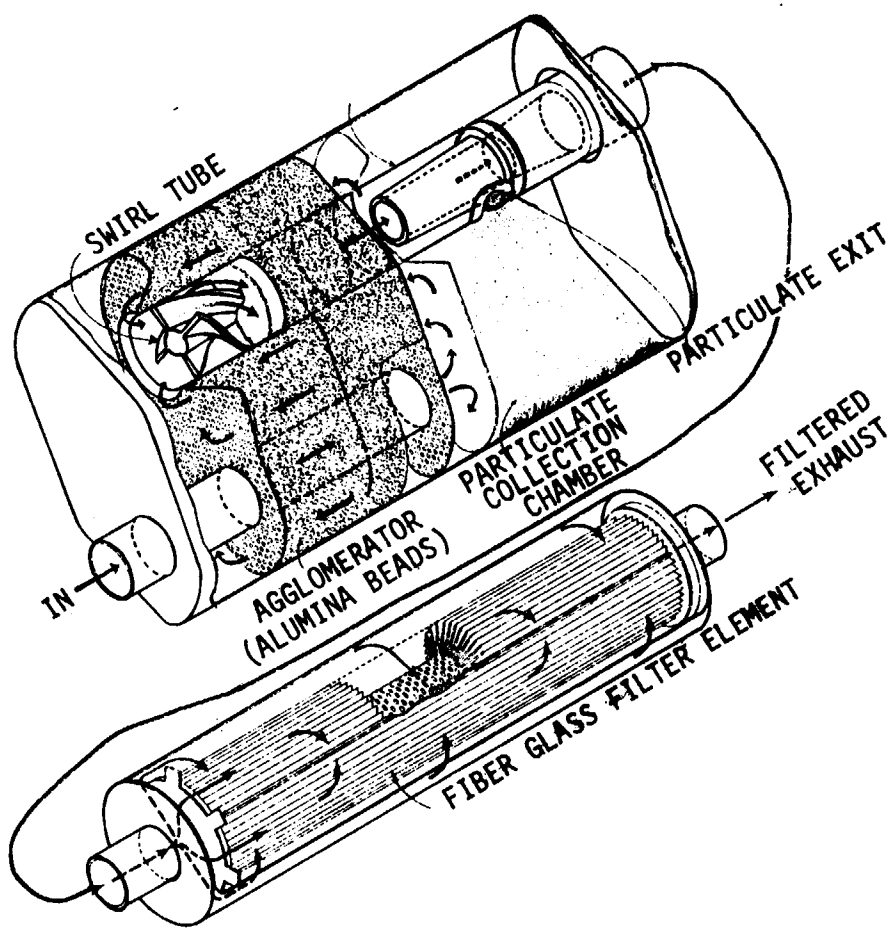

Figure 3-11. PPG particulate lead trapping system construction features.[47] (Courtesy of PPG Industries, Inc.)

deposition of lead chloride aerosol particles in the size range of 0.1 to 0.8 μm showed that collection efficiency in a packed bed depends primarily on the temperature differential between the gas and the packing. At a gas velocity of 0.15 m/s (0.5 fps) through the bed, the efficiency of collection exceeded 95 percent for temperature differentials greater than 200°C (392°F). A gas velocity of 1.30 m/s (4.3 fps) yielded collection efficiencies 10 to 15 percent lower. The efficiency of collection did not change appreciably with changes in particle size or aerosol concentration. Studies of sonic agglomeration revealed that travelling sound waves are relatively ineffective in promoting collection of aerosol in a fluidized bed. Efficiency of a sonic fluidized bed device approached 90 percent for collection of lead chloride aerosol, however, when standing sound waves at a flux in excess of 5000 W/m^2 (465 W/ft^2) were used. Specific use of thermal precipitation or sonic agglomeration in practical devices for control of particulate emissions from motor vehicles has not been reported.

In summary, it is concluded that lead trap devices at their presently reported stage of development are capable of reducing overall particulate lead emissions from motor vehicles by 85 to 95 percent and of reducing emissions of small lead particles, those smaller than 1 μm, by about 70 percent. Lead traps are not presently being installed by automobile manufacturers. Therefore, it is not warranted to discuss possible environmental impacts by use of this control option.

3.1.3 Control Costs

Costs attributable specifically to control of lead emissions from motor vehicles cannot be identified at this time. New automobiles use catalytic reactor systems for control of emissions of gaseous pollutants; the catalysts do not tolerate lead in the fuel. The use of nonleaded fuel eliminates emissions of lead in the exhaust stream, but there is no basis for allocating a specific portion of any incremental cost for nonleaded fuel to the control of lead emissions. A comparison of total costs for control systems using leaded fuel with costs for systems using nonleaded fuel would provide a basis for estimating the increment of cost related to control of lead emissions. Costs for current new car systems that use nonleaded fuel can be estimated, but there are no data on total system costs for control of both gaseous pollutants and lead from vehicles using leaded fuels.

It is possible, however, to examine costs for some elements of overall emission control systems that affect the emission of lead compounds. Such system elements may be categorized as limitations on the use of lead additives in fuels and use of mechanical devices to capture lead compounds from motor vehicle exhaust streams.

3.1.3.1 Lead in Fuels - The benefits of adding lead alkyls to gasoline to increase its octane rating are well known and

generally agreed upon; the resultant higher allowable compression ratios produce more power and better mileage for a given size of engine. The extra power and mileage tend to minimize crude oil consumption. The use of lead alkyls allows greater flexibility in adjusting the refinery process to obtain gasolines of acceptable octane number; in addition, the use of lead is currently the cheapest way to increase fuel octane rating by several octane numbers. Another benefit should be mentioned: operation of pre-1975 cars on unleaded gasoline may result in excessive wear of exhaust valves and valve seats.[49] Valve seat wear tends to be inhibited by deposits of lead or its compounds on valve seats; these deposits act as a lubricant that separates the valve and seat surfaces. With unleaded gasolines, valve seat wear is most noticeable at high engine speeds and heavy loads (high operating temperatures). Incipient welding occurs, and small particles are torn from the valve seats. The solution to this problem for cars designed for use of nonleaded gasoline has been in valve design and in altered materials of construction. Conversion in pre-1975 cars is difficult and expensive. Fortunately, the amount of lead required to prevent exhaust valve wear in such cars is quite small; 0.13 g/liter (0.5 g/gal) will probably suffice.[49]

Also under study are fuel additives other than lead that may be able to offset the potential valve seat problem.

The many implications of reducing or eliminating the use of lead additives in gasoline have been extensively debated. Many elements of cost that have been associated with limiting the use of lead additives cannot be assigned as costs for the control of lead emissions per se. The demand for nonleaded gasoline for 1975 and 1976 model year automobiles, for example, results directly from adoption of catalytic emissions control systems that do not tolerate lead in the fuel; a consequence, however, is the elimination of lead emissions from such vehicles.

The technical and political factors that influence the cost of motor vehicle fuel, and specifically the incremental cost between leaded and nonleaded gasoline are extremely complex and are not discussed in this document. A brief examination of the incremental cost between leaded and nonleaded gasoline is offered.

The first extensive study on costs of producing unleaded gasoline was published in June 1967.[50] The American Petroleum Institute engaged Bonner and Moore of Houston, Texas, to conduct an economic study, the primary objective of which was to obtain data indicative of the added cost of manufacturing unleaded gasoline. The study was based on the situation in the United States and on the

situation prevailing in the petroleum industry in the year 1965. The study was confined entirely to identifying the added costs to the refiner of switching completely to the manufacture of unleaded gasoline at a designated time while maintaining then current octane levels in motor gasoline. Increased capital and operating costs, based on the 1965 situation, were determined. The study was not intended to encompass all costs that might be incurred by the petroleum industry as a whole from the marketing of unleaded gasoline or to examine the impact of such a move on the petrochemical industry. This study indicated that the increase in overall refinery costs for unleaded gasoline, based on an estimated national average, was about 2.2 cents per gallon, with a net increase in requirement of raw stock (crude) of about 5 percent. The total capital investment for the U.S. petroleum industry in new refinery equipment to enable production of nonleaded gasoline was estimated to be 4.235 billion dollars.

A later study by Bonner and Moore, based upon a different series of lead restriction schedules, yielded estimates of 0.05 to 3.24 ¢/liter (0.2 to 0.9 ¢/gal) as the incremental costs for production and marketing of nonleaded gasoline.[51] Using the figure 0.24 ¢/lb (0.9 ¢/gal) as the incremental cost for production and marketing, and an additional cost of 1.0 ¢/liter (3.8 ¢/gal) for loss in efficiency due to the lower

compression ratio of engines using nonleaded gasoline, the Ethyl Corporation estimated that the incremental cost to consumers in the year 1980 due to use of nonleaded rather than leaded gasoline would be 1.3¢/liter (4.8¢/gal) (based on 1971 gasoline prices).[52]

In 1974, the Environmental Protection Agency commissioned a study to mathematically model the petroleum refining industry in the United States and to predict up to 1985 the impacts on the industry of the entry into the market of unleaded gasoline, and the phase-down of total lead use in the gasoline pool.[53] It was assumed that unleaded gasoline would be manufactured at about 92 RON and at an 84 MON minimum. It was assumed that essentially all gasoline would be the unleaded grade in 1985, and an average product demand growth rate of two percent per year was used. Investment was in 1975 dollars. The additional 1985 refining cost, including capital charges and manufacturing costs, was found to be 1.7 cents per gallon of unleaded gasoline. On the same basis, the net energy penalty to refining is 180,000 barrels per calendar day of fuel oil equivalent.

In 1975 the National Academy of Engineering, in addressing the matter of air quality and automobile emissions, examined the relative costs of a variety of motor vehicle emission control systems to achieve various limits for emissions of gaseous pollutants. Although specific analysis

of the incremental cost of nonleaded gasoline was not reported, estimates of 0.13 and 0.53 ¢/liter (0.4 to 2.0 ¢/gal) were used as the cost (price) differential. The report stated that the actual difference in resource costs, as distinct from difference in price, is believed to be about 0.13 ¢/liter (0.5 ¢/gal).

For any particular incremental cost in gasoline, the cost to a motorist will vary with fuel economy of his automobile. The present trend is toward better average fuel economy; engine tuning made possible by use of catalytic emissions control systems, smaller average size of vehicles, improvements in ignition and carburetion, use of radial tires, and other such factors all contribute to improved gasoline mileage. Sales-weighted fuel economy estimates for 1974, 1975, and 1976 model-year American-made automobiles are shown in Table 3-11.[54] The 1974 model automobiles operate on leaded fuel, while most 1975 and all 1976 models operate on nonleaded fuel; average compression ratios are essentially the same for all years, but emissions control systems differ among model years and manufacturers.

Table 3-11. ESTIMATED SALES-WEIGHTED FUEL ECONOMY FOR AMERICAN-MADE AUTOMOBILES[54]

Manufacturer	km/liter (mi/gal) by model year					
	1974		1975		1976	
American Motors	6.97	(16.4)	8.08	(19.0)	7.78	(18.3)
Chrysler	5.87	(13.8)	6.59	(15.5)	6.98	(16.4)
Ford	6.30	(14.8)	5.78	(13.6)	7.36	(17.3)
General Motors	5.10	(12.0)	6.55	(15.4)	7.06	(16.6)

Neither the incremental costs for nonleaded gasoline nor the benefits of improved fuel economy in recent model years can be assigned to the control of lead emissions from motor vehicles. Unrelated though they may be, however, the improvement in fuel economy far outweighs the incremental cost for nonleaded fuel.

The EPA position on fuel economy of controlled automobiles is summarized well in reference 55, Factors Affecting Automotive Fuel Economy. Figure 32 of this reference charts a comparison of 1975 models and pre-control models for all vehicle weights. The comparison is made for individual makes and models averaged in proportion to sales. The city driving fuel economy for 1975 is equal to or better than that of the pre-control models at all weights. It is also better than for 1974 models above 2,000 pounds. Thus, lowering of compression ratio, in itself, has not reduced the fuel economy of late model controlled cars.

Other benefits related directly to use of nonleaded fuel have been identified. The dependence of noble metal catalytic emissions control systems on the use of nonleaded fuel has been studied extensively. One recent report, which cites a number of earlier reports, describes the separate and combined effects of lead alkyls and the halide scavengers, ethylene dibromide and ethylene dichloride, on platinum and palladium oxidation catalysts.[56] Although catalyst activity is not a simple function of the lead deposit (it is influenced by the combination of additives), the report reconfirms that TEL causes permanent deactivation and irreversible loss of the Pt-Pd (platinum/paladium) surface area. The choice of catalytic systems for control of emissions of gaseous pollutants has made such control dependent on nonleaded fuel; the utility of such systems is identified as a major benefit of nonleaded fuels.

Direct monetary benefits also accrue from use of nonleaded fuels. The use of nonleaded fuel is reported to increase spark plug life, to reduce carburetor maintenance, and to reduce corrosion of engine components and exhaust systems. Increased corrosion attributed to the use of leaded gasoline is caused by the halogen-bearing scavengers in the lead alkyl additive mix. One maintenance cost study involves a 4-year test with a fleet of 24 automobiles operated in city-suburban driving and a 5-year survey of 302 vehicles in consumer use.[57] Matched pairs of automobiles were operated on leaded and nonleaded fuels over periods up to 4 years, and the records of maintenance costs were maintained. In this study gasoline-related maintenance costs increased with vehicle age and mileage. It was concluded that over the lifetime of the average car such maintenance costs averaged about 1.3 ¢/liter or 5¢ less per gallon of fuel used for cars using nonleaded gasoline than for those using leaded gasoline in the test fleet, and about 1.1 ¢/liter or 4¢ less per gallon for the nonleaded fuel cars in consumer use.

It is recognized that the lowering of compression ratio to permit automobiles to operate on low octane nonleaded gasoline entails a fuel economy penalty. EPA estimates this penalty to be 5 percent.[58] Given the requirement for emissions control, it is concluded that this penalty may be

offset by retuning of catalyst-equipped automobiles. In addition, it is generally accepted that savings on maintenance that result from use of nonleaded rather than leaded gasoline can be about equal to the fuel penalty, thus representing a net benefit for the use of nonleaded fuel.

In summary, a precise estimate of that fraction of any direct or indirect costs associated with the use of nonleaded gasoline that may be attributed to control of lead emissions cannot be made at this time. Given the requirement for control of emissions of gaseous pollutants, and a trade-off between fuel economy decrement and reduced maintenance costs (neglecting fuel economy improvements from better engine tuning), it is concluded that the cost for control of lead emissions resulting from use of nonleaded fuel is no more than a small (and undeterminable) fraction of the incremental cost between unleaded and leaded fuel. Any incremental cost increases for low-lead fuels which may take place with implementation of time-phased reduction in lead content of gasoline will be attributable to lead emissions control. Any such costs should be less than the 0.13 to 0.63 ¢/liter (0.5 to 2.4 ¢/gal) increment predicted for nonleaded fuel. Moreover, these costs are incurred to meet the requirements of catalytic control systems and therefore, the true cost impact due to lead controls is not given in this document.

3.1.3.2 Collection Devices - Catalytic emissions control systems now in use require the use of nonleaded fuel. The development of lead-tolerant emissions control systems capable of use with a significant fraction of new vehicles could influence the long-range prospects for use of leaded fuels. A great amount of interest in such systems is being exhibited.[3,59,60,61] The acceptance of lead-tolerant emissions control systems could result in adoption of exhaust lead collection devices for control of lead emissions from motor vehicles.

The reported characteristics of several particulate collection devices for trapping lead in automobile exhaust were summarized earlier. Cost estimates for their devices have been offered by three developers: DuPont, Ethyl, and PPG Industries. These estimates are summarized here.

In 1972 DuPont estimated the cost of its production prototype lead trap made to the exact outer dimensions of a conventional muffler for a 1970 Chevrolet automobile with a 5.74 liter (350 CID) engine.[21] Estimated consumer cost for a retrofit trap was $36.00, compared with an estimate of $17.30 for a conventional muffler. Consumer cost estimates for a lifetime-type trap and lifetime conventional muffler were $57.00 and $28.50, respectively. These estimated costs agreed well with estimates obtained by DuPont from a muffler manufacturer; both are summarized in Table 3-12. The report

concludes that the cost differential for a lifetime muffler and lifetime lead trap should not be so great as the $41.46 indicated by Table 3-12 if the trap is original equipment on new vehicles. The amounts shown in Table 3-12 are for purchase by an individual from an automobile parts jobber; costs to a new vehicle manufacturer are expected to be somewhat less.

As reported earlier, the DuPont lead trap has been shown to reduce total lead emissions by 80 to 90 percent and airborne lead emissions by about 70 percent.

Table 3-12. ESTIMATED COSTS OF DUPONT PRODUCTION PROTOTYPE LEAD TRAPS[21]

	DuPont estimate		Manufacturer estimate	
	Conventional muffler	Lead trap	Conventional muffler	Lead trap
Retrofit type trap				
Manufacturing cost	$ 4.50	$ 9.36		
Consumer cost (from jobber)	17.30	36.00	$17.30	$35.16
Lifetime type trap				
Manufacturing cost	$ 7.50	$14.84		
Consumer cost	28.50	57.00		$69.96

The Tangential Anchored Vortex trap of the Ethyl Corporation was reported in 1973 to have (for a device with 57.9 Mm (36,000-mi) life) a manufacturing cost of $6.30

compared with $4.74 for a standard muffler. The comparable manufacturing cost for the TAV device with filter unit was reported to be $10.90. Table 3-13 lists these estimated costs, along with the incremental cost for a consumer, assuming a consumer-manufacturing cost ratio of 3:1, for substituting a TAV trap for a conventional 57.9 Mm (36,000-mi) muffler.

Tests of the TAV trap, as described earlier, showed an average reduction in lead emissions of about 80 percent, and with the added filter stage about 93 percent.

Estimates of manufacturing and consumer costs for the PPG Particulate Lead Trapping System are not available. Estimates were reported in 1974, however, for the original equipment sales prices for the PPG system and a conventional muffler system. For the PPG device, fabricated of aluminized steel, the estimated price of the agglomerator-inertial separator unit was $8 and for the filter unit $13, giving a total price of $21; a conventional muffler-resonator system of the same material was estimated to cost $9. Fabrication from low-grade stainless steel for 80.5 Mm (50,000 mi) durability was estimated to increase the cost of the PPG system to $36 and of the conventional system to $18. Emissions reductions reported for the PPG system are 93 to 96 percent.

Table 3-13. ESTIMATED COSTS FOR ETHYL TANGENTIAL ANCHORED VORTEX (TAV) TRAP BASED ON 57.0 Mm (36,000-mi) MUFFLER LIFE, 1973[64]

	Standard muffler	TAV trap	TAV trap and filter
Total manufacturing cost	$4.74	$6.30	$10.90
Incremental cost over standard muffler		1.56	6.16
Incremental consumer cost over standard muffler (assume markup 3:1)		4.68	18.48

The costs reported here suggest that for lead trap systems capable of reducing particulate lead emissions by about 90 percent, the incremental consumer cost over that for a conventional muffler is about 0.03 ¢/km (0.05 ¢/mi). An original equipment cost, or cost to a vehicle manufacturer to whom marketing economies may apply, may be somewhat lower.[15,47]

Should the use of lead traps become widespread, the disposal of the devices after use would require attention. Recognizing the ecological need to collect the lead from the used devices, the DuPont Company conducted in 1973 a study of the technical feasibility of collection and recycle of the units.[21] The study concluded that economically a recycle program would just break even under the most

favorable set of marketing conditions, including shortage of materials and pressure for environmental concern.

In summary, it is concluded that if economically advantageous lead-tolerant emissions control systems should be developed, or if the retrofitting of pre-1975 automobiles should be necessary for control of lead emissions, lead trapping systems have the potential for reducing particulate lead emissions in the order of 90 percent or more at relatively modest cost.

Since lead collection devices are not currently installed on automobiles by manufacturers, only limited data are available. Therefore, estimating secondary environmental impacts and expanding discussion of this control option are not warranted.

3.1.4 References for Section 3.1

1. Gasoline and Other Motor Fuels. In: Kirk-Othmer Encyclopedia of Chemical Technology. Vol. 10, 3rd Edition, New York, John Wiley & Sons, Inc., 1966. p. 467-481.

2. Taylor, C.F. The Internal Combustion Engine in Theory and Practice, Volume 2. Cambridge, Massachusetts, The MIT Press, 1968. p. 144.

3. Schweikert, J.E., et al. Emission Control With Lean Mixtures. SAE Paper 760226. (Presented at the Automotive Engineering Congress and Exposition. Detroit. February 1976).

4. Air Quality Control Takes on a Major Role in Oil Operations. Oil and Gas Journal. 68(24):104, June 15, 1970.

5. ASTM Manual for Rating Motor Fuels by Research and Motor Methods. 6th Edition. American Society for Testing and Materials. Philadelphia, 1969. 194 p.

6. Lewis, B. and G. von Elbe. Combustion, Flames and Explosion of Gases. New York, Academic Press, Inc., 1961. 731 p.

7. Ter Harr, G.L. et al. Methylcyclopentadienyl Manganese Tricarbonyl as an Antiknock: Composition and Fate of Manganese Exhaust Products. Journal of the Air Pollution Control Association. 25(8):858-860, August 1975.

8. Unzelman, G.H. Manganese Gains Stature as Octane Improves for Unleaded Gasoline. The Oil and Gas Journal. p. 49-57, November 17, 1975.

9. Manganese Gets Boost at SAE Meeting. The Oil and Gas Journal. p. 28-29, October 20, 1975.

10. Brief Passenger Car Data 1969. The Ethyl Corporation, New York. 1969. p. 9.

11. 1976 National Petroleum News Factbook Issue. National Petroleum News. 68(5A), Mid-May 1976.

12. Refineries Get Good News from GM Auto-Emissions Specialists. The Oil and Gas Journal. p. 54, January 12, 1976.

13. Allen, R.R., and C.G. Gerhold. Catalytic Converters for New and Current (used) Vehicles. Universal Oil Products Company. (Presented at the Meeting of West Coast Section of the Air Pollution Control Association. October 8-9, 1970).

14. Minerals Yearbook. U.S. Department of the Interior, Bureau of Mines. Volumes 1961 through 1973. USGPO, Washington, D.C. 1963 through 1975.

15. Annual Review 1975. U.S. Lead Industry. Lead Industries Association, Inc. New York, New York. 1975.

16. Logan, J.O. Universal Oil Products Company. (Testimony to Assembly Committee on Transportation of the California Legislature. Los Angeles. December 4, 1969).

17. Huntzicker, J.J., S.K. Friedlander, and C.I. Davidson. Material Balance for Automobile-Emitted Lead in Los Angeles Basin. Environmental Science and Technology. 9(5):448-457, May 1975.

18. Survey of Lead in the Atmosphere of Three Urban Communities. U. S. Public Health Service, Washington, D. C. Publication No. 799-AP-12, 1965.

19. Stoefan, D. Health Hazards Due to Lead in Gasoline - A Warning from Sweden. Staedthehygiene (Uelzen/ Hamburg). 12:259-260, 1970.

20. Laveskog, A. Organic Lead Compounds in Automotive Exhausts and in Street Air. Stockholm University, Institute of Analytical Chemistry, TPM-BlL-64. January 1971, 84 p.

21. Kunz, W.G., E.S. Jacobs, and A.J. Pahnke. Design and Performance of Muffler Lead Traps for Vehicles. (Paper presented to the Union Intersyndicale de l' Industrie du Petrole). Paris, France. January 1975.

22. Habibi, K. Characterization of Particulate Lead. Vehicle Technology. 4(3):230-253, March 1970.

23. Ganley, J.T., and A.S. Springer. Physical and Chemical Characteristics of Particulates in Spark Ignition Engine Exhaust. Environmental Science and Technology. 8(4): 340-347, April 1974.

24. Sampson, R.E., and A.S. Springer. Effects of Exhaust Gas Temperature and Fuel Composition on Particulate Emission from Spark Ignition Engines. Environmental Science and Technology. 7(1):55-60, January 1973.

25. Dow Chemical Company. Effect of Fuel Additives on the Chemical and Physical Characteristics of Particulate Emissions in Automotive Exhaust. U.S. Environmental Protection Agency, Washington, D.C. EPA-R2-72-066. December 1972.

26. Cantwell, E.N., et al. Control of Particulate Lead Emissions from Automobiles. SAE paper 720672. (Presented at the National Automobiles Engineering Meeting. Detroit. May 1972).

27. Habibi, K. Automotive Particulate Emissions and Their Control. SAE paper 710638. (Presented at the Joint Meeting of SAE Mid-Michigan Section and the American Chemical Society Midland Section. Midland, Michigan. October 1970).

28. Habibi, K., et al. Characterization and Control of Gaseous and Particulate Exhaust Emissions from Vehicles. (Paper presented at the Air Pollution Control Association, West Coast Division - Fifth Technical Meeting. San Francisco. October 1970).

29. Habibi, K. Characterization of Particulate Matter in Vehicle Exhaust. Environmental Science and Technology. 7(3):223-234, March 1973.

30. Ter Haar, G.L., et al. Composition, Size, and Control of Automotive Exhaust Particulates. Journal of the Air Pollution Control Association. 22(1):39-46, January 1972.

31. Lee, R.E. Jr., et al. Concentration and Particle Size Distribution of Particulate Emissions in Automobile Exhaust. Atmospheric Environment. Pergamon Press, Oxford, England. 1970.

32. Guthrie, V.B. Petroleum Products Handbook. New York, McGraw-Hill Book Company, 1960. 864 p.

33. Peirrard, J.M. Photochemical Decomposition of Lead Halides from Automobile Exhaust. Environmental Science and Technology. 3(1):48. January 1969.

34. Kirk-Othmer Encyclopedia of Chemical Technology, Vol. 12, 2nd edition. New York, John Wiley & Sons, Inc., 1967. p. 270-279.

35. Calingaert, G., et al. Studies in the Lead Chloride-Lead Bromide System. Journal of the American Chemical Society. 71(11):3709-3720, November 1949.

36. Hirschler, D.A., et al. Particulate Lead Compounds in Automobile Exhaust Gas. Industrial and Engineering Chem. 49(7):1131-1142, July 1957.

37. Control Techniques for Carbon Monoxide, Nitrogen Oxide, and Hydrocarbon Emissions from Mobile Sources. U.S. DHEW, PHS, National Air Pollution Control Administration. Washington, D.C. NAPCA Publication Number AP-66. March 1970.

38. 42 USC, The Clean Air Act, Amendments of 1970, 1857, et seq., Sec. 211, (December 1970).

39. Federal Register, Regulations of Fuel and Fuel Additives, Part II. Environmental Protection Agency. 38(6):1254-1261, January 10, 1973, and Amendment, Federal Register, 38(234):33734-33741, Part III, December 6, 1973. (40CFR80).

40. Federal Register. Regulations of Fuels and Fuel Additives. Control of Lead Additives in Gasoline. Part 80. September 28, 1976. p. 42675.

41. Strate, H.E. Nationwide Personal Transportation Study - Annual Miles of Automobile Travel. Report No. 2. U.S. Department of Transportation. Federal Highway Administration. Washington, D.C. 1972.

42. 1975 Automobile Facts and Figures. Motor Vehicle Manufacturers Association of the United States, Inc. Detroit. 1975.

43. Hirschler, D. A., and F. J. Marsee. Meeting Future Automobile Emission Standards. AM-70-5. (Paper presented at National Petroleum Refiners Association. San Antonio. April 6-7, 1970).

44. Gray, D.S. Inter Industry Emission Control Program. Lead Trap Feasibility Study. Report 11-1. American Oil Company Research and Development Department. March 1970.

45. Evaluation of DuPont Lead Trap by EPA and DuPont. Petroleum Laboratory. E. I. DuPont De Nemours & Company, Inc. Wilmington, Delaware. PLMR 5-75. August 1975.

46. Lenane, D. L. Status Report - Tangential Anchored Vortex Particulate Trap, Attachment 2. Letter to Senator Randolph January 1974. In: Automotive Lead Emissions, Part 2, p. 95. Hearings before the Panel on Environmental Science and Technology of the Subcommittee on Environmental Pollution of the Committee on Public Works. United States Senate. May 7 and 8, 1974. (Serial No. 93-H41).

47. Fremd, O. Houston Chemical Company, a unit of PPG Industries, Inc. In: Automotive Lead Emission, Part 1, p. 99. (Hearing before the Panel on Environmental Science and Technology of the Subcommittee on Environmental Pollution of the Committee on Public Works). United States Senate. May 7 and 8, 1974. (Serial No. 93-H41).

48. Sood, S. K., and R. Karuhn. Development of Particulate Emissions Control Techniques for Spark Ignition Engines. Environmental Protection Agency. IIT Research Institute. Report No. C6186-5. Chicago. February 1971.

49. Petrus, P. Mobile Oil Corporation. (Statement presented to New York City Council re: Inter Industry Emission Control Program. September 24, 1970).

50. Manufacture of Unleaded Gasoline. U. S. Motor Gasoline Economics, Volume I. Houston. Bonner & Moore Associates. June 1967.

51. An Economic Analysis of Proposed Regulations for Removal of Lead Additives from Gasoline. Houston. Bonner & Moore Associates. March 1972.

52. Blanchard, L. E., and H. E. Hesselberg. Ethyl Corporation Testimony - EPA Hearings on Proposed Lead Regulations. Los Angeles, May 4, 1972. p. III6.

53. The Impact of Lead Additive Regulations on the Petroleum Refining Industry: Volume I Project Summary. Arthur D. Little, Inc. Cambridge, Mass. May 1976. Report to Environmental Protection Agency, Research Triangle Park, N. C. under Contract No. 68-02-1332. EPA publication 450/3-76-016a.

54. Automobile Emission Control - The Current Status and Development Trends as of March 1976. (Report to the Administrator of the Environmental Protection Agency, Office of Mobile Source Air Pollution Control. April 1976).

55. Factors Affecting Automotive Fuel Economy. United States Environmental Protection Agency, Office of Air and Waste Management, Mobile Source Air Pollution Control, Emission Control Technology Division. October 1976.

56. Otto, K., and C. N. Montreuil. Influence of Tetraethyl Lead and Lead Scavengers on Oxidation of Carbon Monoxide and Hydrocarbons Over Pt and Pd. Environmental Science and Technology. 10(2): 154-158, February 1976.

57. Gray, D. S., and A. G. Azhardi. Saving Maintenance Dollars with Lead-Free Gasoline. SAE paper 720084. (Presented at the Automobile Engineering Congress. Detroit. January 1972).

58. Decision of the Administrator, Before the Administrator, Environmental Protection Agency. In: Applications for Suspension of 1977 Motor Vehicle Exhaust Emission Standards. Chrysler Corporation, Ford Motor Company, and General Motors Corporation, Applicants. Washington, D. C., March 5, 1975.

59. Adams, W. E., et al. Emissions, Fuel Economy and Durability of Lean Burn Systems. SAE paper 760227. (Presented at the Automotive Engineering Congress and Exposition. Detroit. February 1976).

60. Herrin, R. J. Lean Thermal Reactor Performance - A Screening Study. SAE 760319. (Presented at the Automotive Engineering Congress and Exposition. Detroit. February 1976).

61. Pozniak, D. J. A Spark Ignition, Lean Homogeneous Combustion Engine Emission Control System for a Small Vehicle. SAE paper 760225. (Presented at the Automotive Engineering Congress and Exposition. Detroit. February 1976).

62. Letter, David M. Augenstein, PEDCo-Environmental, to George B. Crane, Environmental Protection Agency, Durham, N. D., dated March 28, 1977.

63. Harrison, R. M., R. Perry, and D. H. Slater. The Contribution of Organic Lead Compounds to Total Lead Levels in Urban Atmospheres. In: International Symposium Proceedings, Recent Advances in the Assessment of the Health Effects of Environmental Pollution, Volume III. Luxembourg Comm. of European Communities. 1975. p. 1783-1788.

64. Lenane, D. L. Letter to J. H. Somers, Environmental Protection Agency, June 7, 1973. Appendix C, letter to Senator Randolph. January 1974. In: Automotive Lead Emissions, Part 2, p. 424. (Hearings before the Panel on Environmental Science and Technology of the Subcommittee on Environmental Pollution of the Committee on Public Works). United States Senate. May 7 and 8, 1974. (Serial No. 93-H41).

3.2 COAL, OIL, WASTE OIL, AND SOLID WASTE

Stationary combustion sources emitted an estimated 6.5 Gg of lead (7,143 tons) in 1975. The major contributors, to be discussed in this section, were combustion of coal 228 Mg, 257 tons), oil (100 Mg, 110 tons), waste oil (5.0 Gg, 5,480 tons), and solid wastes (1.17 Gg, 1,296 tons) Natural gas combustion does not generate lead emissions.

3.2.1 Coal Combustion

Most of the coal consumed in the United States is burned in utility and industrial boilers. In 1975, combustion in utility, industrial, and commercial and institutional boilers consumed approximately 374, 49, and 3.6 Tg of coal (412, 54, and 4 million tons) respectively.[1] It was estimated that 228 Mg (257 tons) of lead were emitted to the atmosphere from the combustion of 426 Tg of coal (470 million tons).

3.2.1.1 Process Description - Virtually all coals mined in the United States contain lead, which is partially evolved during combustion and is carried from the boiler in the flue gas. Lead is found as a fine particulate in the fly ash, varying in size and concentration according to the type of coal and the combustion system. Three major types of coal combustion systems currently used in this country are dry- and wet-bottom pulverized-coal-fired units, stokers, and cyclone-fired units.

Cyclone firing represents less than 2 percent of the total number of utility coal combustion systems. These units burn coal in a horizontal cylinder, into which part of the combustion air is introduced tangentially, imparting a whirling or centrifugal motion to the coal. Molten ash is discharged from the end of the cylinder.

Stokers are combustion units in which crushed coal is burned on or above a grate. The principal types of stokers are spreader, vibrating grate, (as shown in Figure 3-12), and traveling grate stokers.

Pulverized-coal firing is by far the most common method of burning coal in utility and large industrial boilers. These units burn an air suspension of pulverized coal in a combustion chamber. They yield greater concentrations of fly ash in a smaller size range than either stoker or cyclone units. Figure 3-13 illustrates a pulverized-coal-fired boiler system.

3.2.1.2 Emissions - Studies of the fly ash emitted from coal combustion indicate that from 60 to 90 percent of the lead in the coal is emitted as suspended particlate in the flue gases leaving the boiler.[2,3,4] The amount depends on the properties of the coal, the operating conditions, and the configuration of the boiler. Combustion temperature influences lead emission rates. For example, the lead content of bottom ash from a coal burned at 482°C (900°F)

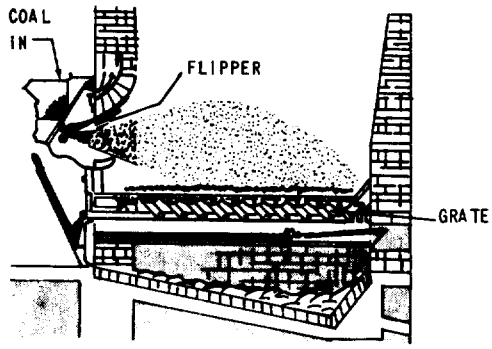

Spreader stoker

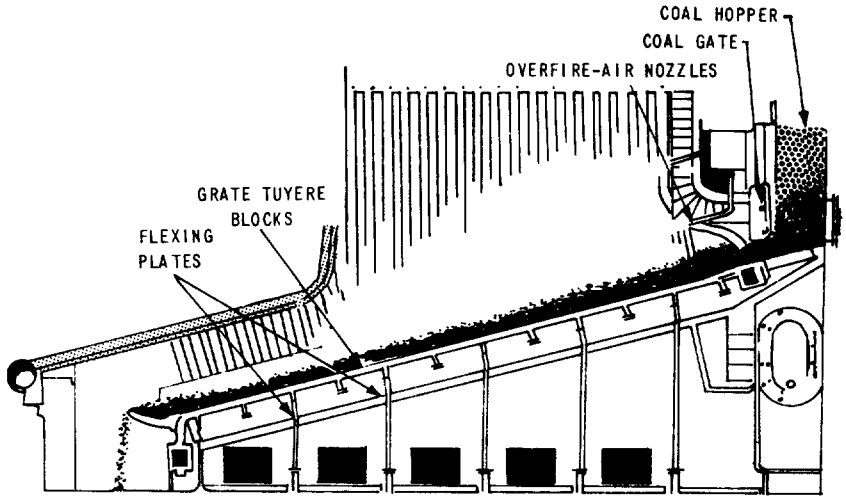

Vibrating grate stoker

Figure 3-12. Spreader and vibrating grate stokers.

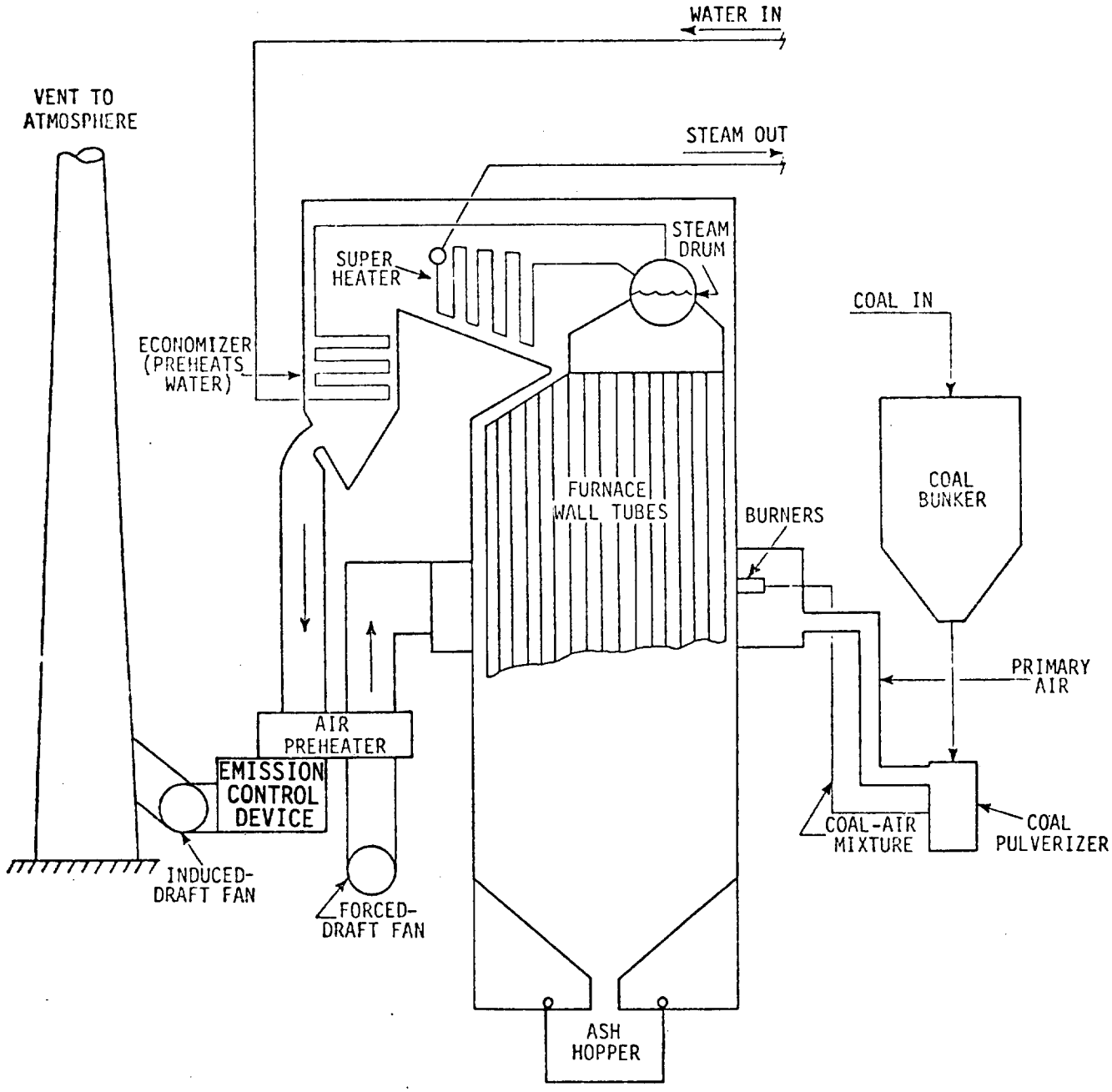

Figure 3-13. Pulverized-coal unit.

was 10 times greater than in the ash from the same coal burned at 982°C (1800°F).[5]

On a state-by-state basis, the average concentration of lead in coal ranges from less than 1 ppm to over 33 ppm by weight. Some coals have been known to contain over 250 ppm lead. The weighted average lead content of United States coal is approximately 8.3 ppm.[6]

Assuming that 80 percent of the lead in coal is released in the fly ash, the emission factor of lead from coal combustion systems can be expressed as 0.8 (L) g/Mg [1.6(L) lb/1000 ton], where L represents the lead concentration of the coal in ppm. Based on 426 Tg of coal (470 million tons) burned in 1975, the emission factor developed above, and 92 percent average particulate control efficiency,[1] it was estimated that 288 Mg of lead (257 tons) was emitted by coal combustion facilities. Specific information on the characteristics of lead emissions, such as particle size distribution and resistivity, is sparse. Tables 3-14 and 3-15 summarize the typical characteristics of exhaust gas from cyclone and pulverized-coal-fired boilers. In addition, minor quantities of fugitive dust are emitted from coal storage piles and from ash disposal operations.

3.2.1.3 Control Techniques - The primary method for control of particulate emissions from coal-fired utility boilers is use of the electrostatic precipitator (ESP). Mechanical

Table 3-14. CHARACTERISTICS OF UNCONTROLLED EXHAUST GAS FROM PULVERIZED-COAL-FIRED UTILITY BOILER

Parameters	Standard international units	English units	References
Gas flow rate[a]	0.1-0.18 $m^3/s \cdot kJhr^{-1}$	0.2-0.33 scfm/10^3 Btu per hr	9
Temperature[b]	150°C	300°F	9
Moisture content	5-15% v	5-15% v	9
Grain loading[c]	17-20 g/m^3	7-8 gr/dscf	9
Particle size distribution[d]	60% < 10 μm 54% < 5 μm 17% < 1 μm	60% < 10 μm 54% < 5 μm 17% < 1 μm	9
Emission factors			
° particulate[e]	8A g/kg coal	17A lb/ton coal	8
° lead[f]	0.8L g/Mg coal	1.6L lb/10^3 ton	2, 3, 4
° sulfur dioxide[g]	19S g/kg coal	38S lb/ton coal	8

[a] Range of volumes correspond to 20-100% excess air.

[b] Downstream from the air preheater. Upstream temperature is about 370°C (700°F).

[c] Depends on coal characteristics and boiler type.

[d] After cyclonic precleaning.

[e] A = ash content of coal, percent by weight; most coals are 8-15% ash.

[f] L = lead content of coal, ppm by weight; U.S. average is 8.3 ppm.

[g] S = sulfur content of coal, percent by weight; most coals are 0.5-3.5% sulfur.

Table 3-15. CHARACTERISTICS OF UNCONTROLLED EXHAUST GAS FROM CYCLONE COAL-FIRED BOILER

Parameters	Standard international units	English units	References
Gas flow rate[a]	0.1-0.18 $m^3/s \cdot kJhr^{-1}$	0.2-0.33 scfm/10^3 Btu per hour	9
Temperature[b]	150°C	300°F	9
Moisture content	5-15% v	5-15% v	9
Grain loading[c]	1.2 g/m^3	0.5 gr/dscf	9
Particle size distribution	40-95%w < 10 μm 20-75%w < 5 μm 1.5-5%w < 1 μm	40-95%w < 10 μm 20-75%w < 5 μm 1.5-5%w < 1 μm	9
Emission factors			
° particulate[d]	1A g/kg coal	2A lb/ton coal	8
° lead[e]	0.8L g/Mg coal	1.6L lb/10^3 ton	
° sulfur dioxide[f]	19S g/kg coal	38S lb/ton coal	8

[a] Range of volumes correspond to 20-100% excess air.

[b] Downstream from the air preheater. Upstream temperature is about 370°C (700°F).

[c] Depends on coal characteristics and boiler type.

[d] A = ash content of coal, percent by weight; most coals are 8-15% ash.

[e] L = lead content of coal, ppm by weight; U.S. average is 8.3 ppm.

[f] S = sulfur content of coal, percent by weight; most coals are 0.5-3.5% sulfur.

collectors, fabric filters, and wet scrubbers are also used to a lesser extent. Lead emission control devices as such are not used on coal-fired boilers. However, conventional particulate control will simultaneously reduce lead emissions.

A. Mechanical collectors: Mechanical collectors, or multiclones, use a combination of centrifugal, inertial, and gravitational forces to separate particles from the gas stream; these units can achieve particulate collection efficiencies of 70 to 90 percent, depending on particle size. Since lead particle sizes are much smaller, a much lower efficiency is expected for lead. They are widely used on stoker-fired units and are used for precleaning ahead of an electrostatic precipitator on some pulverized-coal-fired units.

B. Fabric filters:[9] Fabric filtration has recently been used successfully to achieve total particulate collection efficiencies higher than 99 percent. Pulse-jet fabric filters designed for superficial filter velocities of 2 to 3 cm/s (4 to 6 fpm) and reverse air filters at 1 to 4 cm/s (2 to 7 fpm) have been installed for particulate control. These filter systems use fiberglass or Teflon[R] bags and operate at pressure drops of 1.0 to 1.7 kPa (4 to 7 in. H_2O).

[R] Registered trademark

C. Electrostatic precipitators:[10] To date, electrostatic precipitators are used to a great extent to control particulate emissions from large boilers.

The size of ESP systems varies, depending upon flue gas volume, particulate collection efficiency, and fly ash characteristics. Larger-sized ESP systems are required for higher efficiencies, greater gas volume, and more-difficult-to-collect ash. The design efficiency of modern ESP systems ranges between 95 and 99.7 percent, depending upon owner policy and air pollution control requirements.

ESP systems are installed either before (hot side) or after (cold side) the air preheater system. Combustion gas temperatures ahead of the air preheater range from 315 to 480°C (600 to 900°F). After the air preheater, gas temperature ranges from 120 to 200°C (250 to 400°F). Economics and ash characteristics determine whether a hot-side or cold-side ESP system is selected. Some types of coal produce an ash which can be collected much more easily on the hot side; although the gas volumes are greater because of the higher temperature, hot-side ESP systems are applied. Some ash can be collected almost as easily on the cold side of the air preheater, and in this case, cold-side ESP systems are applied. Often there

are borderline cases where one ESP manufacturer will recommend a hot-side ESP while another will recommend a cold-side ESP as the most economical choice. For difficult-to-collect ash, collecting-surface area to gas volume ratios for cold-side, high-efficiency ESP systems are as much as 157 $m^2/m^3 \cdot s^{-1}$ (800 $ft^2/10^3$ scfm). Hot-side precipitators with as much as 69 $m^2/m^3 \cdot s^{-1}$ (350 $ft^2/10^3$ scfm) collecting-surface area have been installed for high-efficiency, difficult-to-collect ash applications. Figure 3-14 shows schematically a typical cold-side ESP application on a utility boiler. Table 3-16 presents flue gas and particulate data from two examples of pulverized-coal-fired boilers equipped with cold-side precipitators.

D. Wet scrubbers:[11] High-energy venturi scrubbers offer particulate control efficiencies of 99 percent or higher and are generally used in conjunction with SO_2 removal systems. Pressure drops up to 6.2 kPa (25 in. H_2O) are required to meet emission regulations, depending on the particle size and concentrations and other exhaust gas characteristics. Variable-throat designs are used to maintain pressure drop as the boiler load fluctuates. Corrosion potential and maintenance requirements are high. Materials of construction consist of 316 L stainless steel used with alkaline addition to the scrubbing water to maintain its pH above 3.

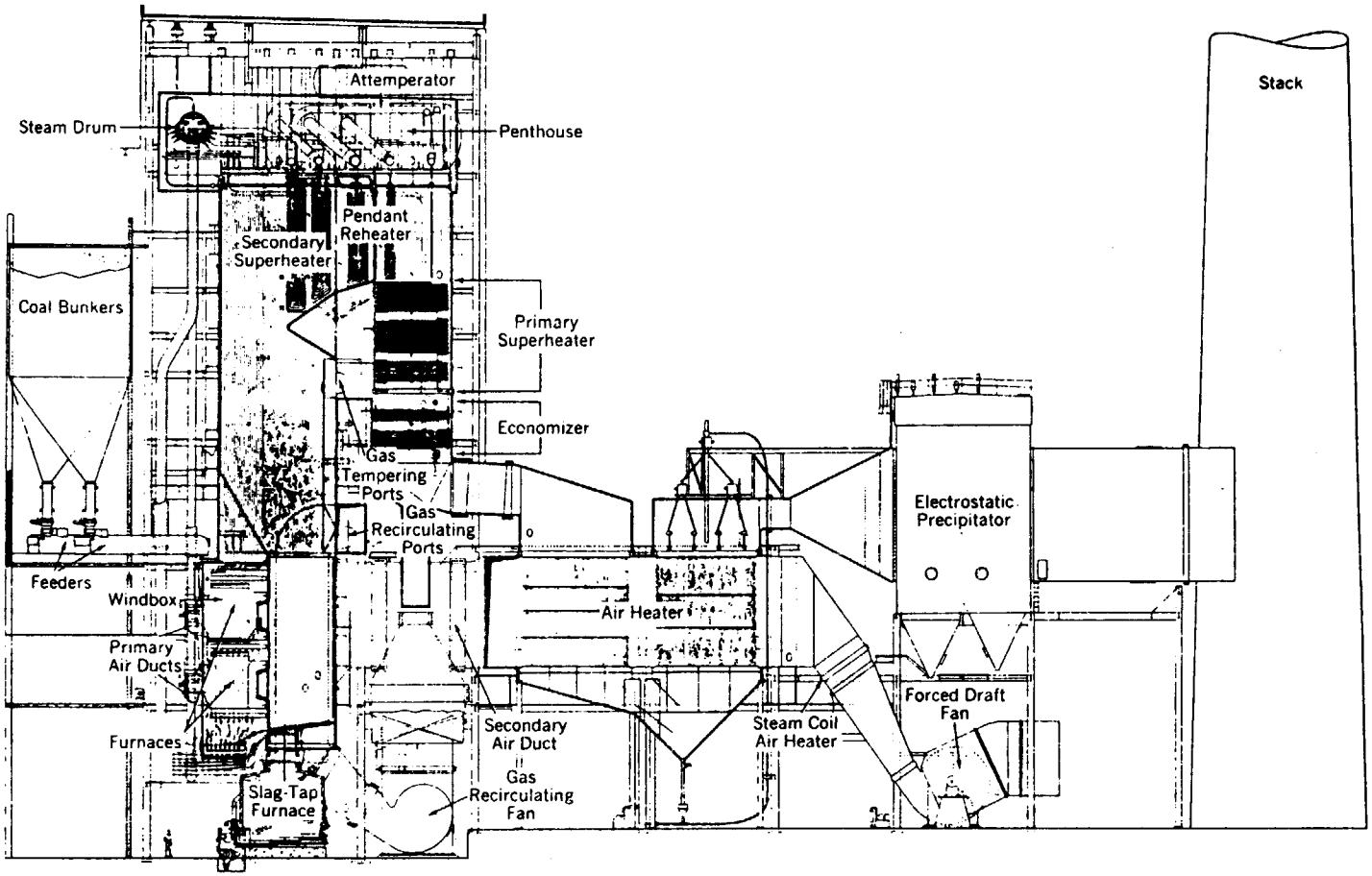

Figure 3-14. Diagram of coal-fired boiler equipped with an ESP.[7] (Courtesy of Babcock and Wilcox Company, New York, New York)

Table 3-16. EXAMPLE FLUE GAS CHARACTERISTICS AND PRECIPITATOR COLLECTION EFFICIENCY DATA[a]

	Flue Gas Parameter		Particulate Loading		Collection Efficiency, %
	Flow	Temp.	Inlet	Outlet	
Unit A	163 m^3/s	154°C	11.3 g/m^3	0.66 g/m^3	99.4
72 MW	345,000 acfm	310°F	4.9 gr/scf	0.27 gr/scf	
Tangential coal-fired 2.2% S, 13.4% ash			19.4 kg/GJ	0.11 kg/GJ	
			9.35 $lb/10^6$ Btu	0.052 $lb/10^6$ Btu	
Unit B	797 m^3/s	146°C	11.3 g/m^3	0.087 g/m^3	99.2
512 MW	1,687,000 acfm	295°F	4.9 gr/scf	0.038 gr/scf	
Horizontal coal-fired 2.4% S, 11% ash			20.1 kg/GJ	0.15 kg/GJ	
			9.7 $lb/10^6$ Btu	0.075 $lb/10^6$ Btu	

[a] PEDCo-Environmental test data.

Fiberglass-reinforced polyester, rubber-lined steel, and other corrosion-resistant materials can also be used.

3.2.1.4 Control Costs[12] - Capital and annualized costs of particulate control systems can vary significantly, depending on design efficiency and many site-specific factors. Factors having a major impact upon costs are the size, remaining life, and capacity factor of the plant; the sulfur and ash content and heating value of the coal; the maximum allowable particulate emission rate; and replacement power requirements.

Figure 3-15 presents capital and annualized costs of ESP's as a function of plant size. These costs are given for existing plants at specified control levels and sulfur contents for a capacity factor of 0.6.

Other assumptions are as follows:

Capacity, MW	Heat rate, J/kWh	(Btu/kWh)	Flue gas rate, $m^3/s \cdot Mw$	(acfm/MW)	Remaining life, yr
150	10,550	(10,000)	1.60	(5,400)	10
300	10,000	(9,500)	1.54	(3,275)	15
450	9,800	(9,300)	1.48	(3,140)	20

Capital costs for new plant installations are 15 to 20 percent lower, and annualized costs, 20 to 30 percent lower.

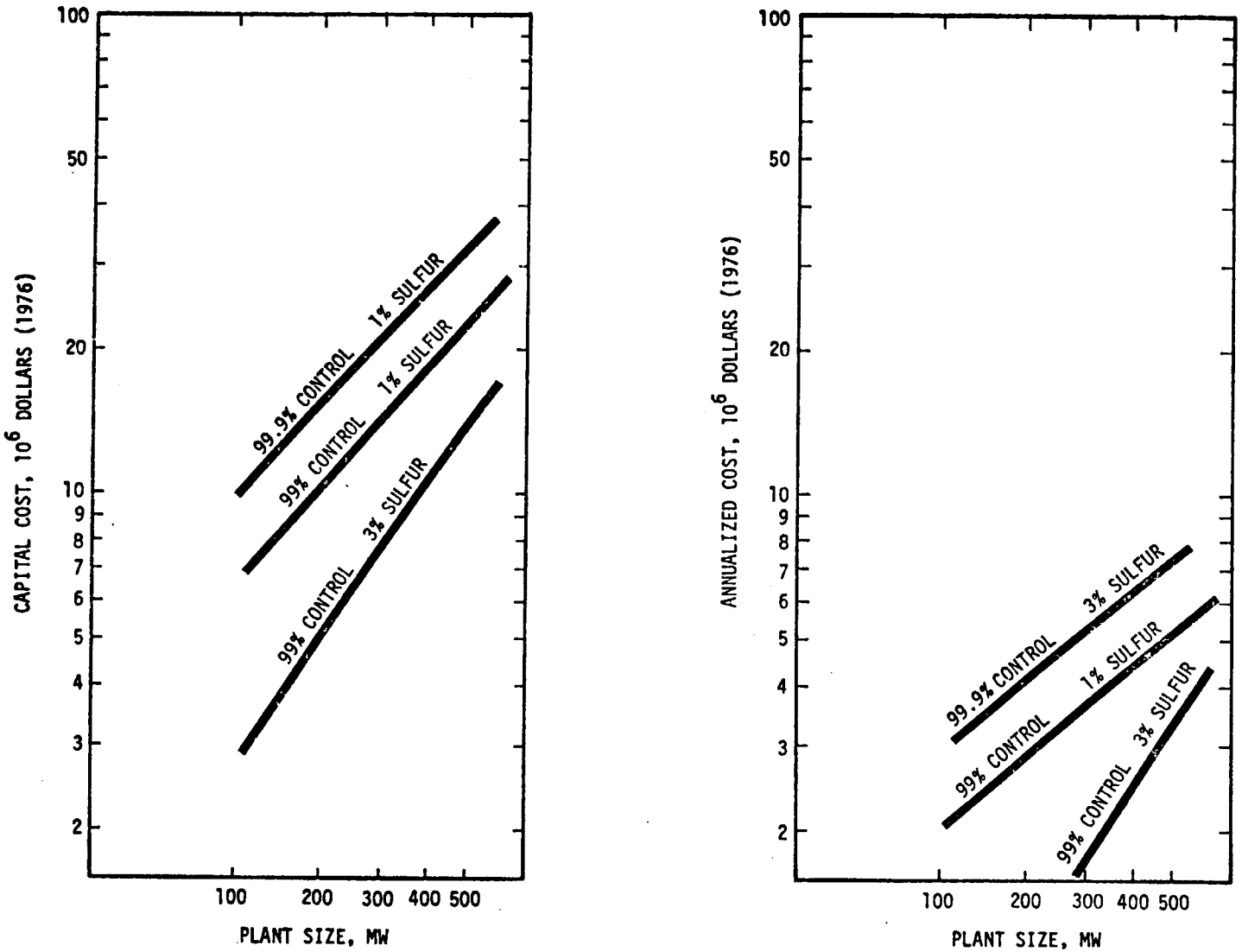

Figure 3-15. Total capital and annualized costs for ESP's on coal-fired boilers.[12]

3.2.1.5 Impacts

A. Emission Reductions

Particulate emission reductions achieved by air pollution control equipment varies according to the type of boiler and the ash content of the coal. The reduction for pulverized coal-fired units, by far the most common type of utility boiler, is about 8.4 A kg/Mg and (17 A lb/ton) where A is the ash content in percent by weight. Emission factors for coal-fired boilers indicate the amount of emission reduction and solid waste generated by particulate emission control. The lead content of coal averages 8.3 ppm.

B. Energy Impact

Secondary fuel input (natural gas or oil) to coal-fired boilers may amount to 5 percent of the heat input,[13] or 1.2 GJ/Mg coal (1.2 MM Btu/ton) for coal with 2.6 MJ/kg (12,000 Btu/lb) heating value. For the ESP application about 0.017 GJ/Mg coal (0.017 MM Btu/ton) of electrical energy required for a 0.8 kPa (3 in. WG) system pressure drop. For a wet scrubber operating at 6 kPa (24 in. WG), 0.11 GJ/Mg coal (0.11 MM Btu/ton) is required.

About 10 GJ/Mg coal (10 MM Btu/ton) of electrical energy can be generated, assuming 30 percent conversion efficiency,[13] of which about 0.2 percent is required for ESP operations and 1 percent is required for the wet collector operation.

C. Water Pollution Impact

Boiler feedwater blowdown is the major source of wastewater at a utility boiler and amounts to approximately 5 percent of the total feedwater rate.[13] This discharge is estimated at 0.5 m^3/Mg coal (130 gal/ton). Essentially no wastewater is generated by fabric filter or ESP applications. However, a wet scrubber may produce up to 1.2 m^3/Mg coal (300 gal/ton) of wastewater.

D. Solid Waste Impact

The volume of solid waste generated by air pollution control devices depends on the type of boiler and coal characteristics. For a pulverized coal-fired boiler, the amount of solid waste generated can be 8.5 A kg/Mg coal (17 A lb/ton), where A is the ash content of the coal. The solid waste (bottom ash) generated without emission control is about 1000 A kg/Mg coal (2000 A lb/ton).[3] Therefore the solid waste impact of emission control is less than 1 percent.

3.2.2 Oil Combustion

Oil consumption in the United States in 1975 totalled 165 Mm^3 (1.04×10^9 bbl) of distillate fuel oil and 177 Mm^3 (1.12×10^9 bbl) of residual fuel oil.[14] Total lead emissions for all oil combustion sources are estimated at 100 Mg (110 tons) in 1975.

3.2.2.1 Process Description - Oil combustion sources are grouped in three major categories: (1) electric utility, (2) industrial, and (3) commercial, institutional, and residential units. A front-fired steam generator is shown in Figure 3-16. Utility boilers generally emit less particulate matter per quantity of oil consumed than do the smaller industrial and commercial boilers using the same grade of fuel.

3.2.2.2 Emissions - Emissions from oil combustion depend on the type of oil, the type and size of combustion equipment, and the degree of combustion. Distillate oils contain less lead than residual oil.

Typical particulate emission factors for oil-fired combustion sources are: 1 kg/m^3 (8 $lb/10^3$ gal) from power plants, 2.75 kg/m^3 (23 $lb/10^3$ gal) from industrial and commercial plants using residual oil; and 1.8 kg/m^3 (15 $lb/10^3$ gal) from industrial and commercial plants using distillate oil.[8]

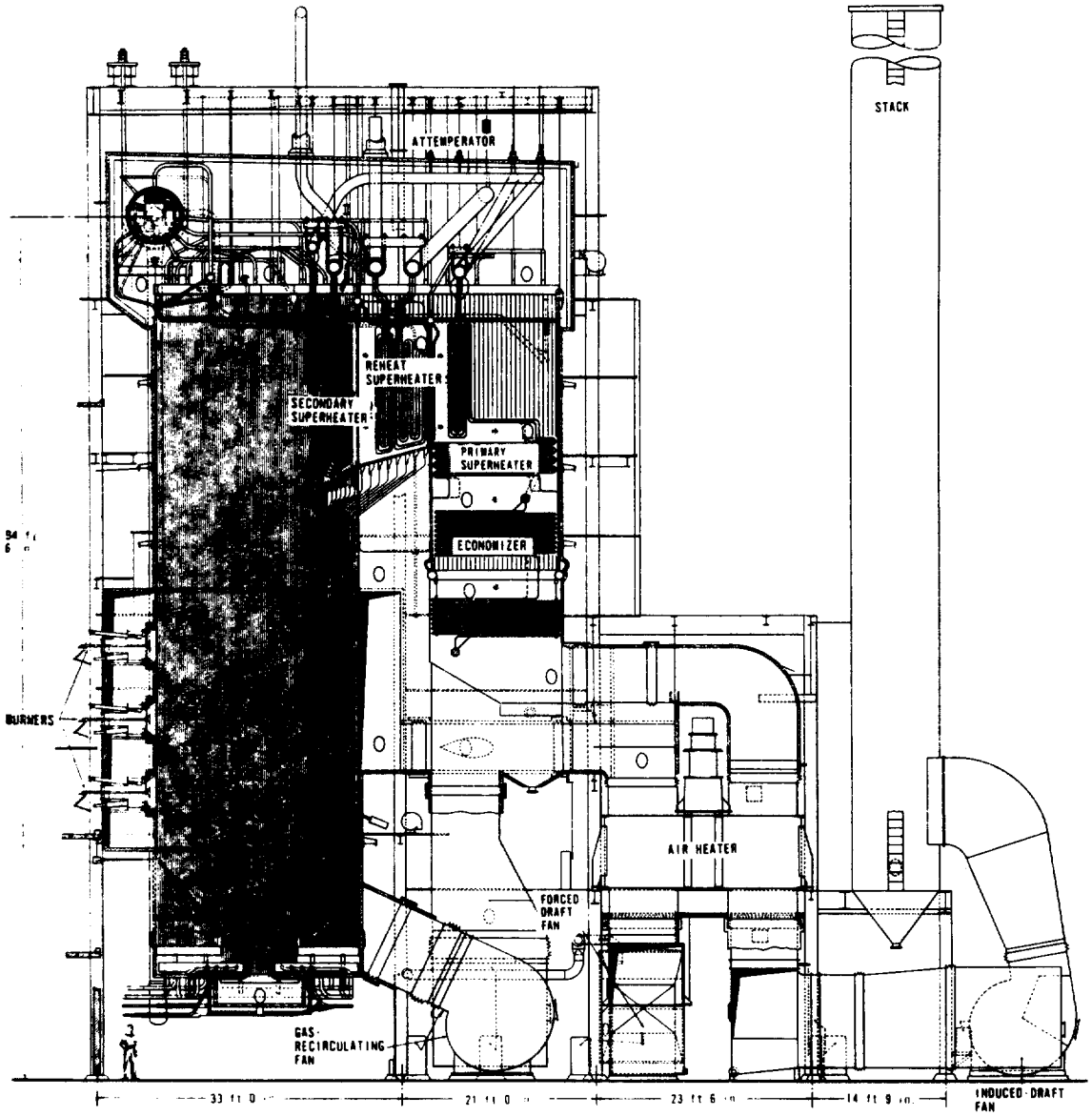

Figure 3-16. An oil front-fired power plant steam generator. (Courtesy of Babcock and Wilcox Co., New York)[7]

Typical characteristics of exhaust gas from oil-fired boilers are shown in Table 3-17.

Concentrations of lead in residual oils range up to 1 ppm and in distillate oils from 0.1 to 0.5 ppm by weight.[15,16] Emission tests of oil-fired boilers show that up to 60 percent of the lead in the fuel is emitted to the atmosphere.[17,18] A general emission factor of 0.5 (P) g/m^3 of oil [4.2 (P) $lb/10^6$ gal] was developed where P is the lead content of oil in ppm by weight, based on the emission of 50 percent of the lead in the fuel.

Totals of 165.3 Mm^3 (1.04×10^9 bbl) of distillate fuel oil and 177.4 Mm^3 (1.116×10^9 bbl) of residual fuel oil were consumed in 1975, accounting for 34 percent by volume of the total refinery products. On the basis of 1974 consumption distribution, 13 and 9.8 Mm^3 (81.8 and 61.8 MM bbl) of distillate oils were consumed by power utilities and industrial boilers, respectively. About 88.1 and 26.5 Mm^3 (5.54 and 1.67 10^8 bbl) of residual oil were fired in utility and industrial boilers, respectively.[14] The estimated annual lead emissions from utility boilers burning fuel oil were 45 Mg (50 tons), and from industrial boilers, 14 Mg (15 tons). These values were calculated assuming 0.1 ppm lead in distillate oil and 1.0 ppm in residual oil. With the combustion of 343 Mm^3 (2.156×10^9 bbl) of distillate and residual oils from all sources, including home

Table 3-17. CHARACTERISTICS OF UNCONTROLLED EXHAUST GAS FROM OIL-FIRED BOILERS

Parameters	Standard international units	English units	References
Fuel consumption	0.26 liter/kW	0.070 gal/kW	7
Gas flow rate	19 km^3/m^3 of oil	2500 acf/gal	7
Temperature[a]	150°C	300°F	7
Moisture content	9-11% v	9-11% v	7
Grain loading	< 0.07 g/m^3	< 0.03 gr/dscf	7
Particle size distribution	87% w < 1 μm 7.3% w < 2 μm 3.0% w < 5 μm	87% w < 1 μm 7.3% w < 2 μm 3.0% w < 5 μm	7
Emission factors			
° particulate[b]	1.0-2.8 kg/m^3 oil	8.0-23 lb/1000 gal oil	8
° lead[c]	0.5(P) g/m^3 oil	4.2(P) $lb/10^6$ gal	17, 18

[a] After air preheater.

[b] Depends upon oil and boiler type.

[c] P = lead content of oil, ppm by weight.

heating, railroads, and trucking, a total lead emission of 100 Mg (110 tons) of lead is estimated on the basis of the above assumptions.

In an analysis of 100 crude oils produced in the United States, the average lead content was 0.29 ppm.[19]

Emissions of lead from oil consumption, considered in terms of both nationwide and point-source emissions, are comparatively small. A typical medium-sized (300 MW) power plant boiler will consume 71.5 m^3 (450 bbl) of fuel oil per hour and exhaust 470 m^3/s (10^6 cfm) of combustion products.[7] If lead content of the oil were a very high 5 ppm, the lead emission rate would amount to only 0.04 g/s (0.33 lb/hr) or 88 $\mu g/m^3$ (3.8×10^{-5} gr/acf).

3.2.2.3 Control Techniques - Emission control devices are not generally used on oil-fired boilers since particulate regulations can be met by proper design, operation, and maintenance of firing equipment.

Precipitators and fabric filter systems could be used to control particulate emissions, as well as lead, up to 99 percent efficiency or higher. Lead emissions can also be reduced by utilizing low-lead fuel.

3.2.2.4 Control Costs - Since it may not be necessary to require an air pollution control device for oil-fired sources, no control costs are given.

3.2.3 Solid Waste Incineration

An average of 1.6 kg (3.5 lb) of domestic refuse and garbage is collected per capita per day in the United States.[20] Excluded from this estimate are wastes such as demolition and construction wastes, street sweepings, sewage sludge, and residuals from mining, agricultural, and industrial activities. Incineration of wastes as a means of volume reduction is a common practice in metropolitan areas. In 1975, approximately 16.5 Tg (18.2×10^6 tons) of waste was burned in a wide variety of municipal incinerators.[21] Possible sources of lead in the waste are solder from tin cans, lead foils, collapsible tubes, lead toys, and crankcase oils. Quantitative data on the lead content of the waste are not available, but based on limited emissions test data, the 1975 lead emissions from municipal incinerators are estimated at 1.17 Gg (1296 tons).

3.2.3.1 Process Description - Most incinerators consist of a refractory-lined chamber in which refuse is burned on a grate. To achieve more complete combustion, most municipal incinerators incorporate a secondary chamber where gas-phase combustion takes place. The burning mechanism is one of fuel-bed surface combustion. This is attained by the predominant use of overfire combustion air and by charging the incinerator in such a manner as to provide concurrent travel of both air and refuse with minimum admission of

underfire combustion air. Charging of the waste in the primary chamber is thus an important aspect of proper operation. Auxiliary fuel is usually required to initially ignite the waste.

Gases from the secondary chamber either discharge directly through a stack or pass through one or more air pollution control devices before discharge to the atmosphere.

3.2.3.2 Emissions - Incineration generates both gaseous and particulate emissions. Operating conditions, refuse composition, and incinerator design have a pronounced effect on the emissions. Particulate emissions are most affected by the manner in which combustion air is supplied to the combustion chamber(s), the method of charging, and ash removal. Figure 3-17 shows a cross-section of a typical municipal incinerator with a gas cooler and precipitator.

Lead is emitted in the form of particulates. For control of these emissions it is important to limit the admission of underfire air and thereby maintain relatively low fuel bed temperature. With a relatively high rate of air flow through the fuel bed, the stack effluent contains appreciable quantities of metallic salts and oxides in microcrystalline form. A probable explanation is that vapor-phase reactions and vaporization of metals take place at high fuel-bed temperatures, with resultant condensation

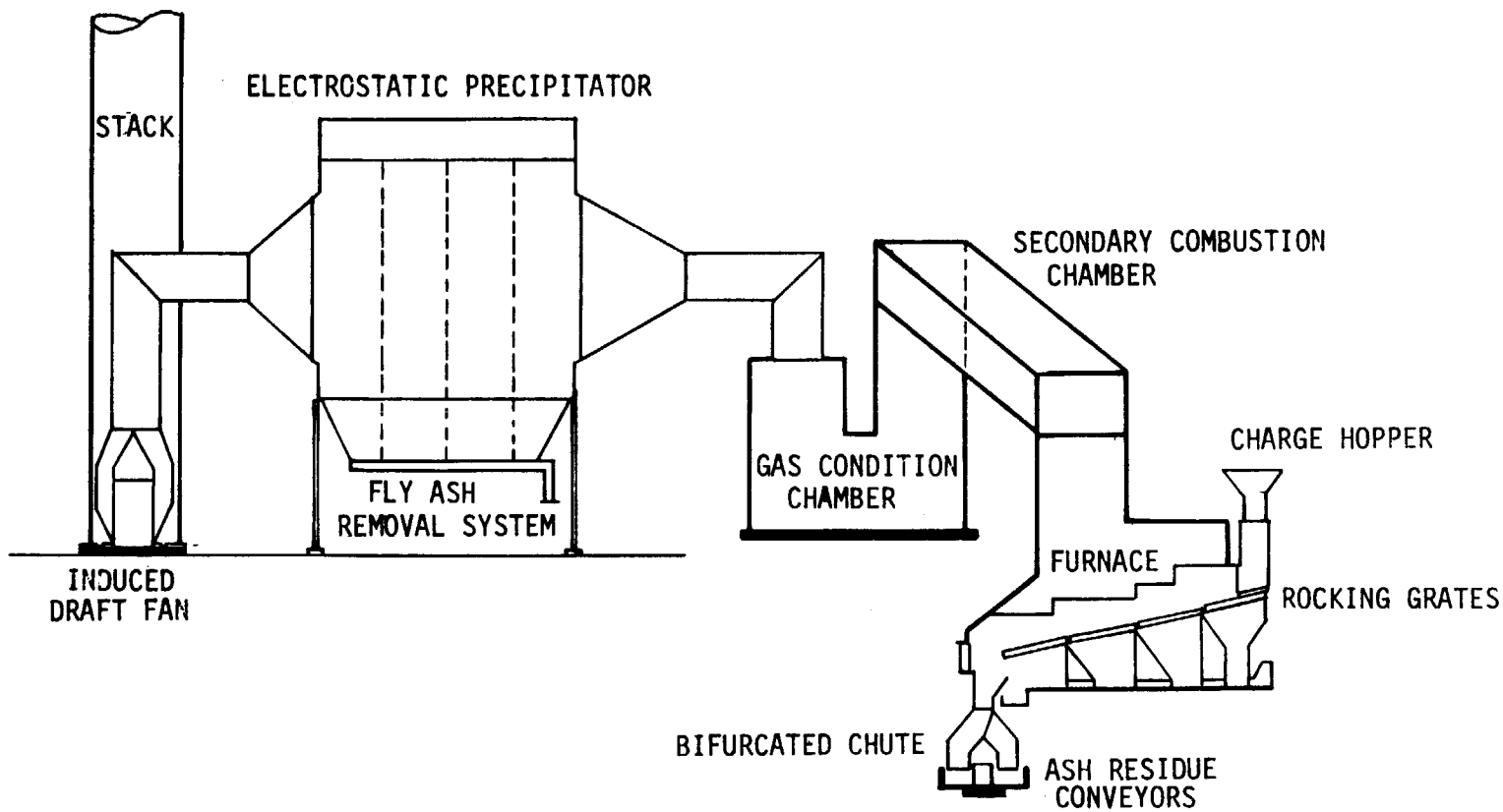

Figure 3-17. ESP installation on a municipal incinerator showing gas conditioning system.

of particles in the effluent gases as they cool upon leaving the stack.[22]

Although very limited lead emission test data are available, several tests indicate that lead emissions range from 0.015 to 0.25 g/kg of charge (0.03 to 0.5 lb/ton). Since adequate data on process conditions and waste lead content are not available, no conclusions can be made about the relative effects of these variables. A recent study indicates that 95 percent of the lead particles are smaller than 3 microns diameter, and 60 percent smaller than 1 micron.[22] Typical exhaust gas parameters are given in Table 3-18.

On the basis of emissions data in references 15, 22 and 23, uncontrolled lead emissions from municipal incinerators are estimated to be 0.2 g/kg of charge (0.4 lb/ton). Assuming an overall control efficiency of 64 percent,[1,21] the lead emissions from municipal incinerators in 1975 are estimated to be 1.17 Gg (1296 tons).

3.2.3.3 Control Techniques - Proper design and operation are the most effective means of minimizing particulate emissions from incinerators. A modern, well-designed, municipal incinerator, however, cannot meet Federal and state regulations for particulate emissions without a control device. To attain these standards, almost all particles larger than 1 to 3 microns must be removed. This requirement eliminates the traditional sole use of low-

Table 3-18. CHARACTERISTICS OF UNCONTROLLED EXHAUST GAS FROM MUNICIPAL INCINERATORS

Parameters	Standard international units	English units	References
Gas flow rate	6.25 m^3/kg charge[a]	100 scf/lb charge	7, 9
	3.75 m^3/kg charge[b]	60 scf/lb charge	
Temperature	315-370°C	600-700°F	7, 9
Grain loading	0.7-2.3 g/m^3	0.3-1.0 gr/dscf	7, 9
Particulate size[c] distribution	70% < 60 μm 42% < 20 μm 18% < 10 μm 12% < 5 μm	70% < 60 μm 42% < 20 μm 18% < 10 μm 12% < 5 μm	
Lead size distribution	95% < 3 μm 60% < 1 μm	95% < 3 μm 60% < 1 μm	22
Emission factors			
° particulate	8.5 g/kg charge	17 lb/ton charge	8
° lead[d]	0.2 g/kg charge	0.4 lb/ton charge	15, 22, 23

[a] 200% excess air, refractory-lined furnace.

[b] 80% excess air, water-wall furnace.

[c] Obtained from a major air pollution control equipment manufacturer.

[d] Fifty percent or more of the lead in the charge may be emitted in the exhaust gas.

efficiency control devices such as baffled chambers and spray towers and necessitates the use of electrostatic precipitators, wet scrubbers, or rarely, fabric filter systems. These devices can collect a substantial amount of lead if they are designed to collect submicron particles. Since vaporization of metallic salts and oxides and subsequent condensation of these vapors may be a probable cause of lead emissions, these emissions may also be reduced by limiting the admission of underfire air and thereby controlling fuel bed temperatures.

Segregation of waste before combustion can be utilized to remove metal components and thus reduce potential lead emissions. Alternatively, switching from incineration to a landfill for disposing of solid waste will eliminate lead emissions.

Selection of a specific control technique depends on such factors as the available space and waste disposal facilities, the control efficiency requirement, initial system cost, operating cost, reliability, incinerator's age, and land availability for a landfill.

A. Gas Cooling: Depending on the furnace type, temperatures of the gases leaving the furnace range from 426 to 1090°C (800 to 2000°F). Cooling is required prior to introduction of these gases to a baghouse or a precipitator, and also, in view of rising costs of materials, before a scrubber.

For baghouses and precipitators, the primary requirement is complete evaporation of the water in the cooling chamber, with no moisture carryover. Otherwise, the dust will tend to cake or form a slurry.

The interior of the the spray cooling chamber is equipped with refractory lining, as is the ductwork leading from the incinerator furnace. In addition, titanium, Hastealloy alloy C-276, and Inconel alloy 625 have shown satisfactory test performance. Since the control device and fan can be damaged by exposure to high temperatures, provision should be made to bypass the gases around the control device in case of failure of the water supply or other components of the system.[10]

B. Wet Collectors:[24] Incinerator stack gases contain gases such as hydrogen chloride that dissolve during scrubbing and cause the water to become acidic. Because of this, even stainless steel scrubbers have been known to corrode. Therefore, steel-lined scrubbers are used and pH of the scrubbing solution is controlled by the addition of alkali. To achieve an emission rate of 50 mg/m^3 (0.02 gr/scf), venturi scrubbers with pressure drops as high as 12 to 15 kPa (50 to 60 in. H_2O) may be required. Selection of the pressure requirement for a scrubber is extremely difficult because of variations in particulate loading and size distribution.[11] Wastewater from the scrubbers can be used

to quench the furnace residue prior to treatment or disposal, thereby reducing both water and treatment costs.

C. Baghouses: Only a few baghouses have been built for control of emissions from municipal incinerators. The lack of use may be due to the sensitivity of filters to high and low temperatures, space requirements, rapid fouling of filters by condensation of fats, and significant operating costs.[24] Most fabric filter installations have used siliconized fiberglass bags. Cleaning is done by intermittent shaking, reverse air, pulse-jet, and combinations of these methods. Typical superficial filter velocities are 1 to 2 cm/s (2 to 4 fpm) with corresponding pressure drops of 1 to 2 kPa (4 to 8 in H_2O).[9]

D. Electrostatic Precipitators: Although used extensively in Europe, electrostatic precipitators were not used on incinerators in the U.S. until 1969. Almost all new incinerators built since 1969 are equipped with electrostatic precipitators for particulate emission control. Figure 3-17 shows an ESP applied to an incinerator. Design efficiencies of these precipitators range from 93 to 97.5 percent.[24] Reported values of precipitation rate parameter, or drift velocity, are 4 to 10 cm/s (0.13 to 0.33 fps).[11] Table 3-19 presents design parameters for precipitators recently applied to incinerators.

Table 3-19. DESIGN PARAMETERS FOR ELECTROSTATIC PRECIPITATORS ON INCINERATORS[24]

Plant	Capacity, TPD	Gas flow 1000 m^3	Gas temp., °C	Gas velocity m/s	Plate area $m^2/1000\ m^3$	Input KVA	Efficiency wt. %
Montreal	4 x 300	3.17	280	1.67	529	35	95.0
Stamford	1 x 220	4.53	315	1.83	515	57	95.0
Stamford	1 x 360	6.37	315	1.10	729	225	95.0
Stamford	1 x 150	2.15	315	1.16	712	75	95.0
SW Brooklyn	1 x 250	3.71	288	1.34	492	47	94.3
So. Shore, N.Y.	1 x 250	3.85	315	1.71	492	33	95.0
Dade City, Fla.	1 x 300	8.10	299	1.19	574	48	95.6
Chicago, NW	4 x 400	3.11	232	0.88	597	40	96.9
Braintree, Mass.	2 x 120	0.91	315	0.94	597	19	93.0
Hamilton, Ont.	2 x 300	2.29	307	1.07	840	70	98.5
Washington, D.C.	6 x 250	3.70	288	1.25	670	77	95.0
Eastman Kodak	1 x 300	2.87	329	1.04	863	106	97.5
Harrisburg, Pa.	2 x 360	2.83	210	1.07	656	40	96.8

Note: Except for capacity, data refer to design parameters for one precipitators; several may exist.

Corrosion resulting from acidic gases can be a problem in precipitator operation. This problem can be overcome by maintaining gas temperature above the dewpoint, with proper insulation and hot-air purging during startup and shutdown. The primary material of construction has been mild steel. To prevent accelerated deterioration due to condensation of acid gas, castings of Corten steel have also been used.[11]

3.2.3.4 Control Costs - A refractory-lined municipal incinerator with a capacity of 227 Mg/day (250 TPD)[24] is considered a typical model plant for the emission control cost analysis. Exhaust flow from this type and size of incinerator is 70 m^3/s at 980°C (148,000 acfm at 1800°F).[7,9] Emissions are 80 kg/h (177 lb/hr) particulate and 1.9 kg/h (4.2 lb/hr) lead. These gases are cooled by a spray chamber to 315°C (600°F) before they enter an insulated electrostatic precipitator. The ESP is designed to maintain a system collection efficiency of 99 percent by providing 2850 m^2 (30,700 ft^2) of plate area. The 110-hp fan system handles 47 m^3/s (100,000 acfm) at a system pressure drop of 1 kPa (4 in. W.G.). This control strategy will meet a typical state particulate emission control standard of 0.1 g/kg charge (0.1 lb/1000 lb).

The capital costs are estimated at $926,000, including ESP, spray chamber, pump, holding tank, fan system, and ductwork.

The annualized costs are estimated at $248,000, including utilities, labor, maintenance, overhead, and fixed costs (with capital recovery).[a] Sludge disposal costs are minimal since on-site disposal facilities and equipment are generally available. A 6000-hour annual operating time and 1500 hours annual labor are assumed.

The capital and annualized costs are expressea below in terms of exhaust flow rate and annual hours of labor.

S.I. units

Capital, $ = $7.24 \times 10^4 V^{0.6}$

Annualized, $ = $587V + 19.6H + 1.4 \times 10^4 V^{0.6}$

$V = m^3/s$ at 980°C
H = annual labor hours

$23 < V < 210$
range

English units

Capital, $ = $732Q^{0.6}$

Annualized, $ = $0.277Q + 19.6H + 141Q^{0.6}$

Q = acfm at 1800°F
H = annual labor hours

$50{,}000 < Q < 450{,}000$
range

---

[a]See Section 2.9 and Appendix B for discussion of cost analysis. Detailed cost studies are available from EPA upon request.

Cost data for operating municipal incinerators were compiled by a major manufacturer of pollution control equipment. Figure 3-18 shows total capital costs as a function of gas volume for various control devices. Annualized costs are given in Figure 3-19. The capital costs are flange-to-flange costs, not including ductwork, fans, and gas conditioning equipment. The annualized costs include operating, maintenance, and capital charges.

3.2.3.5 Impacts

A. Emission Reductions

The particulate emission reduction achieved by air pollution control systems for municipal incinerators are about 8.5 kg/Mg charge (17 lb/ton). The lead content is estimated at 2.4 percent by weight.

B. Energy Impact

The auxiliary heat input ranges from about 5 to 25 percent of the heat content of the charge, depending upon moisture content and other waste characteristics.[25] The heating value for typical wastes is about 11 GJ/Mg charge (11 MM Btu/ton), and therefore, 0.6 to 2.8 GJ/Mg charge (0.6 to 2.8 MM Btu/ton) of auxiliary fuel (oil, natural gas or pulverized coal) for some incinerators. The ESP control system for the model incinerator consumes 0.06 GJ/Mg charge (0.06 MM Btu/ton), a 2 to 10 percent increase

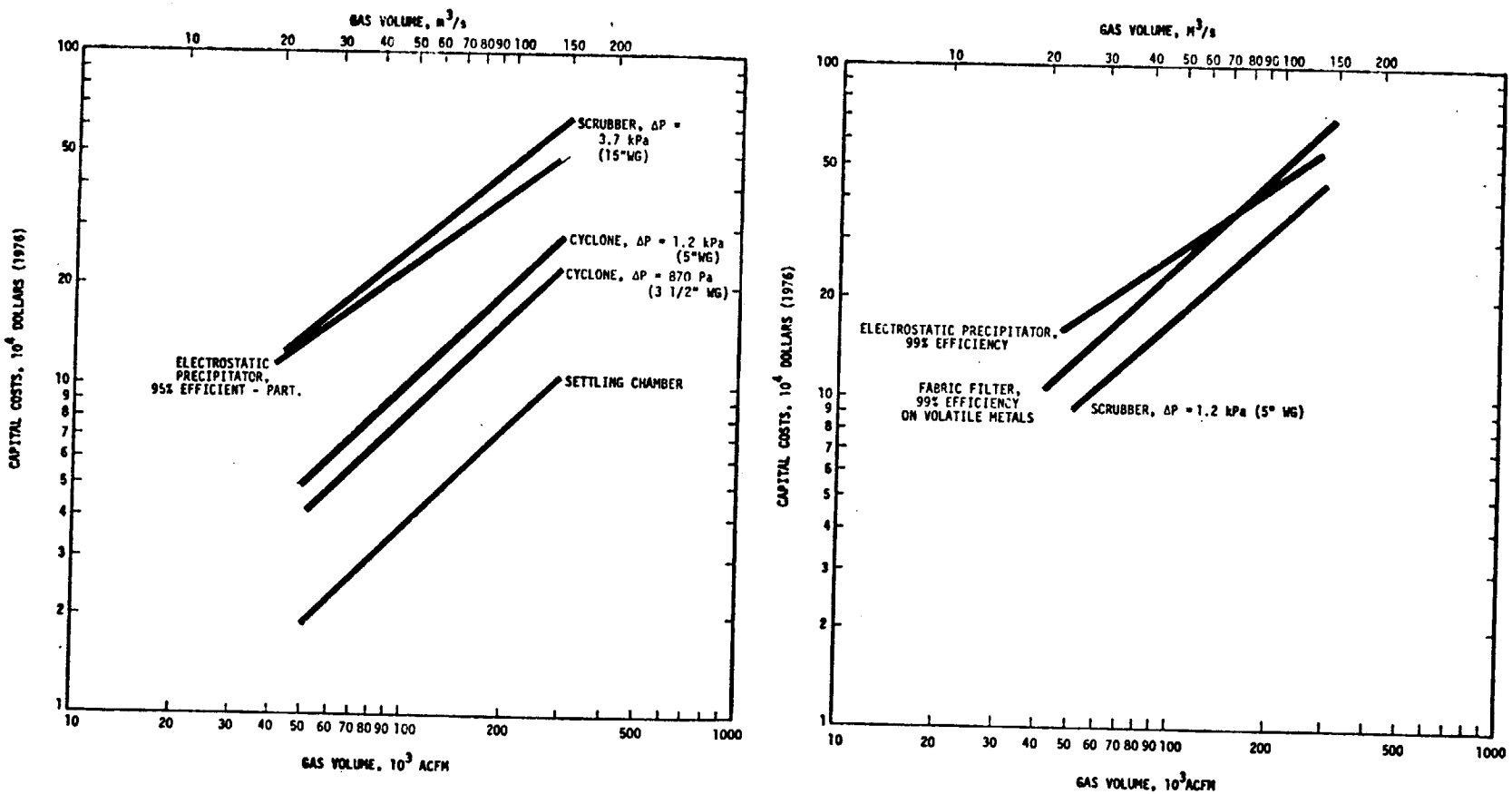

Figure 3-18. Capital costs for various types of control devices for municipal incinerators (includes only control device and installation). (Courtesy of Mr. Robert Morand, Wheelabrator-Frye, Inc. Cincinnati, Ohio).

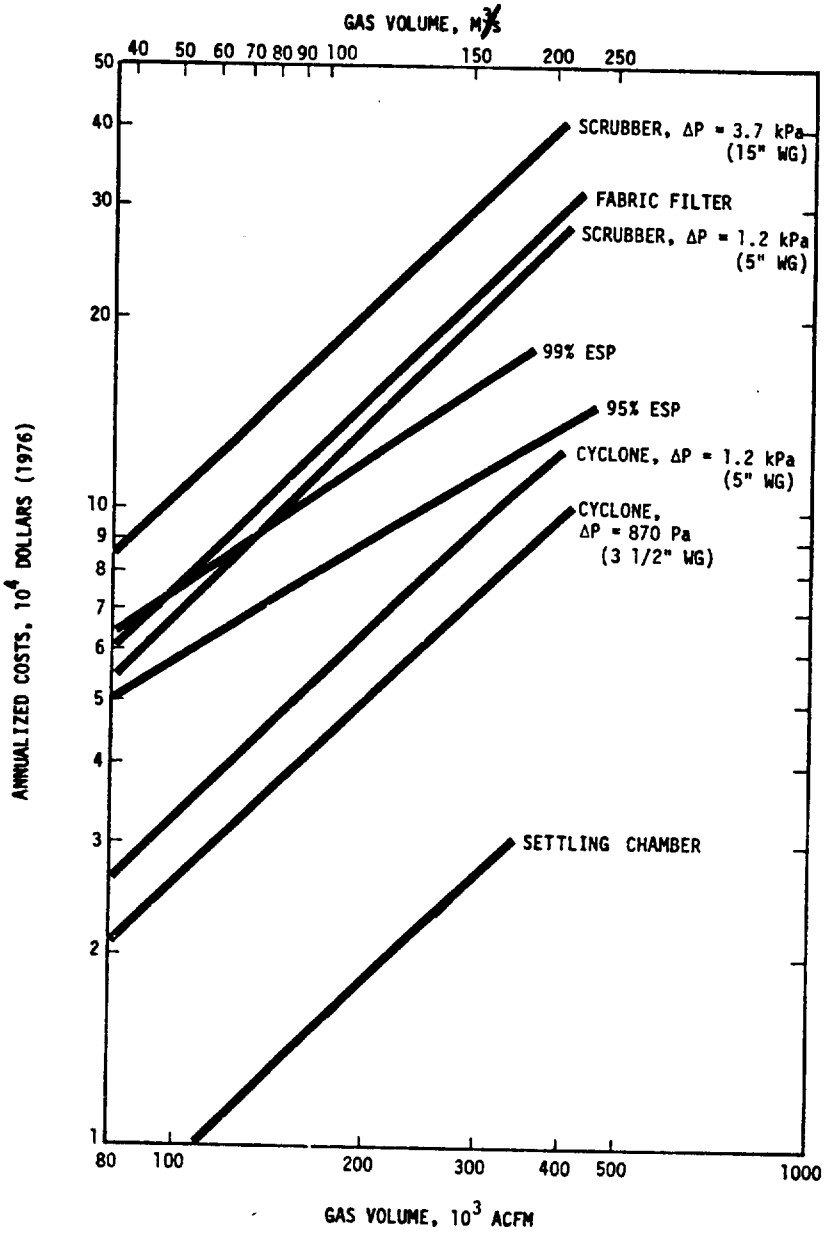

Figure 3-19. Annualized costs for various control devices on municipal incinerators (Courtesy of Mr. Robert Morand, Wheelabrator-Frye, Inc. Cincinnati, Ohio).

in energy demand. If a 5 kPa (20 in. WG) scrubber is utilized, energy requirements are about 5 times that for the ESP.

C. Water Pollution Impact

Water is used to quench the incinerator bottom ash prior to disposal. Two municipal incinerator operations uses 2.5 to 3.0 m^3/Mg charged (600 to 700 gal/ton) for this purpose, most of which is recycled.[26] About 30 ℓ/Mg charge (8 gal/ton) is needed to sluice the dust collected by the ESP. The same amount of water is discharged from a scrubber system which recycles 90 percent of the scrubber water.

D. Solid Waste Impact

The solid waste generated by incineration is the amount of ash input less the atmospheric emissions. Typical municipal wastes contain 30 to 50 percent by weight as charged[27] and emit about 8.5 kg/Mg (17 lb/ton) of waste incinerated. The solid waste generated is approximately 290 to 490 kg/Mg charge (580 to 980 lb/ton). The solid waste generated by air pollution control is about 8.5 kg/Mg charge (17 lb/ton), an increase of 1.7 to 5.9 percent.

3.2.4 Waste Oil Disposal

The various sources of waste oil may be classified into five broad types: automotive lubricants, metal-working lubricants, heavy hydrocarbon fuels, animal and vegetable oils and fats, and industrial oil materials. The waste automotive lubricants include crankcase oils, transmission fluids, differential gear lubricants, and hydraulic oils; they originate mainly from automobile service stations. As a means of disposal and for recovery of economic and energy values, some of the waste oil is burned as fuel in industrial and utility boilers. It is either blended with virgin fuel for use in power plants, directly fired as in rotary cement kilns, or used as supplementary fuel in smaller boilers generating steam for space heating and processing.

An estimated 1.04 Mm^3 (2.74×10^8 gal) of waste crankcase oil was consumed as an alternative fuel in 1975. Of the total 1.82 Mm^3 (4.8×10^8 gal) of waste crankcase oil used in the U. S., 15 percent was re-refined, 15 percent was used for road oil or asphalt, and 13 percent for miscellaneous purposes.[28] Lead in waste automotive lubricants originates from leaded gasoline additives. It is estimated that about 5.0 Gg of lead (5,480 tons) was emitted in 1975 by combustion of waste oil.

3.2.4.1 Process Description - Waste oil is burned in conventional boiler equipment, as shown earlier in Figure 3-16

Combustion of untreated waste oil can increase maintenance requirements, foul and corrode the surfaces of boiler heat exchangers, and contaminate the environment. Waste oil combustion generates less particulate and SO_2 than coal.

The potentially adverse environmental impacts of waste oil combustion result from significant concentrations of waste oil contaminants, particularly lead, which may be emitted in part to the atmosphere with flue gas.

3.2.4.2 Emissions - Lead emissions from sources burning waste oil depend largely on the lead content of the waste oil and operating conditions of the combustion source. The lead content may range from 800 to 11,200 ppm.[29] Average concentrations are given as 6000 ppm[28] and as 10,000 ppm.[30]

Three EPA emission tests established a lead emission factor of 4.8 (M) kg/m^3 of waste oil (40 M $lb/10^3$ gal), where M is the lead content of waste oil in percent.[31] These tests and other information on combustion sources using waste oil directly or in a blend with fuel oil indicate that about 50 percent of the lead is emitted with the flue gas during the normal operation.[29,31] A total of 1.04 Mm^3 (2.74×10^8 gal) of waste oil was fired in combustion processes in 1975.[24] Therefore, at a 50 percent emission rate, the estimated annual uncontrolled lead emission from combustion sources using waste oil (assuming 10,000 ppm by weight lead) was 5.0 Gg (5,480 tons).

The lead in the flue gas from waste oil combustion is emitted as particulate. In tests conducted recently by Exxon Research and Engineering using 10 percent waste oil in combustion the particulate emitted contained 14 to 19 (average 16) weight percent lead.[29] In addition to being present in the flue gas, the lead is a principal constituent of the ash produced in combustion, accounting for 35 percent of the total ash content. The ash content from combustion of waste oil lubricants ranges from 0.03 to 3.78 weight percent, which is higher than that produced from combustion of distillate or residual fuel oil.[29] Table 3-20 gives characteristics of exhaust gas from a waste oil-fired boiler.

Additional information on typical contents of lead and the fraction of input lead emitted would enable a more accurate assessment of emission factors. Data concerning the effects of equipment capacities, burner configuration, and operating conditions on lead emissions would also be useful.

3.2.4.3 Control Techniques - Currently, particulate control is not usually applied at oil-fired combustion sources. Blends of waste oil with virgin fuel in low ratios (1 to 5% by volume) can also be burned in combustion sources with no control without exceeding particulate emission regulations.

Emissions of lead from burning of waste oil can be minimized by pretreatment of oil prior to combustion or by use of high-efficiency particulate control. The pretreatment methods include vacuum distillation or solvent extraction,

settling, and/or centrifuging.[32] These pretreatment techniques may alleviate technical problems associated with the storage, transport, and burning of waste oil, but they will not significantly reduce the submicron-sized constituents of the waste oil and may cause the use of waste oil to be uneconomical.[29]

The increased use of low-lead fuels in automobiles will proportionately decrease the lead content of crankcase oils.

Even though not in widespread use, high-efficiency particulate control devices can control lead and other submicron- sized emissions from oil combustion. Fabric filters, electrostatic precipitators, and to a lesser degree, high-energy venturi scrubbers are all capable of removing submicron-sized particles. Studies have shown that baghouses can successfully remove about 99 percent of submicron particulate.[29] A properly operated and maintained baghouse is capable of achieving efficiencies greater than 99.99 percent for 0.5-micron-diameter particulate.[33]

The most economical and environmentally favorable options for utilizing waste oil are stated as follows:[29]

(1) Large users, especially utilities, could blend small percentages of a partially treated or untreated waste oil with their current fuel without necessarily adding emission control equipment.

(2) Medium-sized users now operating effective emission control equipment could blend high or low-treated waste oil with their other fuels.

Table 3-20. CHARACTERISTICS OF UNCONTROLLED EXHAUST GAS FROM MEDIUM AND LARGE WASTE OIL-FIRED BOILERS

Parameter	Standard international units	English units	References
Gas flow rate	1.7 $m^3/s \cdot MW$	350 scfm/MM Btu/hr input	7
Temperature	150°C	300°F	7
Moisture content	9-11% v	9-11% v	7
Grain loading	0.2-0.5 g/ m^3 (virgin oil)	0.1-0.2 gr/scfd (virgin oil)	7
Particle size distribution	(100% waste oil) 76-79% w Pb. < 1 μm 16-21% w Pb. < 1-10 μm 2.7-4.4% w Pb. < 10 μm	(100% waste oil) 76-79 % w Pb < 1 μm 16-21% w Pb < 1-10 μm 2.7-4.4% w Pb < 10 μm	29
Emission factors			
° particulate[a]	2.3 kg/m^3 (virgin oil)	19 lb/10^3 gal (virgin oil)	8
° lead[b]	4.8 M kg/m^3	40 M lb/10^3 gal	

[a] Particulate emissions vary according to type of boiler and grade of fuel burned. See Section 4.2 for specific emission factors.

[b] M is the percent by weight of lead in the oil-normally about one percent.

(3) Relatively small users could burn highly-treated waste oil (after lead removal) by itself.

3.2.4.4 Control Costs - The economics of waste oil combustion are based on the fuel costs and operating charges associated with burning a specific fuel. If particulate control equipment were required, the costs would not be greatly different from those associated with coal-fired boilers, possibly 10 to 20 percent less. Depending on fuel costs, the addition of control equipment would shift the economics away from the use of waste oils as fuel and probably would cause the owner to burn only virgin fuel.

One report states that more than 11.4 km^3 (3×10^6 gal) of waste oil must be burned in a boiler in order to offset annualized control costs.[29]

3.2.5 References for Section 3.2

1. National Emission Data System (NEDS). U. S. Environmental Protection Agency. Research Triangle Park, N. C. Updated May 1975.

2. Davidson, R. L., et al. Trace Elements in Fly Ash. Env. Sci. & Tech. 13. 1974. p. 1107-1113.

3. McSich, F. G., et al. Coal Fired Power Plant Trace Element Study. Radian Corp., Austin, Texas. Environmental Protection Agency. Region VIII. Contract No. 68-01-2663. September 1975. p. 22.

4. Bolton, N. E., et al. Trace Element Measurements at the Coal-Fired Allen Steam Plant. February 1973-July 1973. Oak Ridge, Tennessee, National Laboratory. For U. S. Atomic Energy Commission. Contract No. W-7405-Eng.-26. June 1974. pp. 3-5.

5. Survey of Lead in the Atmosphere of Three Urban Communities. U. S. D. HEW, PHS, National Air Pollution Control Administration. NAPCA Pub. No. AP-12. Raleigh, N. C. April 1970. p. 94.

6. Abernathy, R. F., M. J. Peterson, and F. H. Gibson. Spectrochemical Analysis of Coal Ash for Trace Elements. Burea of Mines. RI 7281. July 1969.

7. Danielson, J. A. (ed.). Air Pollution Engineering Manual. 2nd Edition. Air Pollution Control District, County of Los Angeles. Environmental Protection Agency. Research Triangle Park, N. C. AP-40. Chapter 9. May 1973.

8. Compilation of Air Pollutant Emission Factors. 2nd Edition. U. S. Environmental Protection Agency. Research Triangle Park, N. C. Publication AP-42. February 1976.

9. Billings, C. E. (ed). Fabric Filter Manual. The McIlvaine Company. Northbrook, Illinois. February 1976.

10. Nichols, G. B. (ed). Electrostatic Precipitator Manual. The McIlvaine Company. Northbrook, Illinois. February 1976.

11. The McIlvaine Scrubber Manual Volume III. McIlvaine Company. Northbrook, Illinois. 1974.

12. Gibbs, L. and T. Ponder. Model Plant Cost Estimates for ESP's on Coal-Fired Utility-Sized Boilers. PEDCo-Environmental Specialists, Inc., Cincinnati, Ohio. For U.S. Environmental Protection Agency. August 1976.

13. Personal communication with Mr. David Noe. PEDCo-Environmental, Cincinnati, Ohio. October 11, 1977.

14. Breese, F. National Petroleum News Factbook. McGraw-Hill. New York. Mid-May 1976.

15. Davis, W.E. Emission Study of Industrial Sources of Lead Air Pollutants, 1970. W.E. Davis and Associates. Leawood, Kansas. Contract No. 68-02-0271. April 1973.

16. Smith, W.S. Atmospheric Emissions from Fuel Oil Combustion. U.S. Dept. HEW. Taft Sanitary Engrg. Center. Cincinnati, Ohio. November 1962.

17. Levy, A., S.E. Miller, R.E. Barrett, E.J. Schulz, R.H. Melvin, W.H. Axtman, and D.W. Locklin. A Field Investigation of Emission from Fuel Oil Combustion for Space Heating. Battelle, Columbus. Presented at American Petroleum Institute Committee on Air and Water Conservation Meeting at Columbus, Ohio. November 1, 1971.

18. Test No. 71-CI-08. Emission Testing Branch. Environmental Protection Agency. Research Triangle Park, N.C. April 19-23, 1971.

19. Hora, C.A., A.T. Myers, P.J. Dunton, and H.J. Heyden. Metals in Crude Oils. Geological Survey Bulletin 1100. U.S. Government Printing Office. Washington, D.C. 1961.

20. Resource Recovery and Waste Reduction. Third Report to Congress. U.S. Environmental Protection Agency. Office of Solid Waste Management Programs. 1975.

21. Hopper, T.G. and W.A. Marrone. Impact of New Source Performance Standards on 1985 National Emissions from Stationary Sources. Volume I. The Research Corporation of New England. For Environmental Protection Agency. Research Triangle Park, N.C. Contract No. 68-02-1382. Task 3. October 24, 1975.

22. Yost, K.J. The Environmental Flow of Cadmium and Other Trace Metals. Purdue University. West Lafayette, Indiana. NSF (RANN) Grant Gl - 35106. Progress Report. July 1, 1973 to June 30, 1974. 287 p.

23. Closs, F.L., R.J. Drago, and H.E. Francis. Metal and Particulate Emissions from Incinerators Burning Sewage Sludge. Proceedings of the 1970 National Incinerator Conference of ASME. 1970. 6 p.

24. Weinstein, N.J. and R.F. Toro. Control Systems on Municipal Incinerators. Environmental Science and Technology. June 1976. pp. 545-547.

25. Personal communication with Mr. John Bruck. PEDCo Environmental, Cincinnati, Ohio. October 11, 1977.

26. Wilson, D.A. and R.E. Brown. Characteristics of Several Incinerator Process Wastewaters. Proceedings of the 1968 National Incinerator Conference. ASME. New York, NY. 1968. p. 196.

27. Kaiser, E.R., et al. Municipal Incineration of Refuse and Residue. Proceedings of the 1968 National Incinerator Conference. ASME. New York, NY. 1968.

28. Wyatt, S., et al. Preferred Standards Path Analysis on Lead Emissions from Stationary Sources. Volume I-IV. U.S. Environmental Protection Agency. Research Triangle Park, N.C. September 14, 1974.

29. Chansky, S., et al. Waste Automotive Lubricating Oil Reuse as a Fuel. U.S. Environmental Protection Agency. ORD. Washington, D.C. EPA Contract No. 68-01-1859. September 1974.

30. Final Report of the API Task Force on Used Oil Disposal. API Committee for Air and Water Conservation. American Petroleum Institute. New York, NY. May 1970.

31. Test No. 71-CI-09. Emission Testing Branch, U.S. Environmental Protection Agency. Research Triangle Park, N.C. April 19-23, 1971.

32. Quang, Dang Vu, et al. Spent Oil Reclaimed Without Acid. Hydrocarbon Processing. 55(12): 130-131.

33. GCA/Technology Division. Fabric Filter Systems Study. Report to National Air Pollution Control Administration. December 1970.

ENVIRONMENTAL PROTECTION AGENCY
Technical Publications Branch
Office of Administration
Research Triangle Park, North Carolina 27711

OFFICIAL BUSINESS
AN EQUAL OPPORTUNITY EMPLOYER

POSTAGE AND FEES PAID
ENVIRONMENTAL PROTECTION AGENCY
EPA - 335

SPECIAL FOURTH-CLASS RATE
BOOK

U.S.MAIL

Return this sheet if you do NOT wish to receive this material ☐ or if change of address is needed ☐. (Indicate change, including ZIP code.)