Note: This is a reference cited in *AP 42, Compilation of Air Pollutant Emission Factors, Volume I Stationary Point and Area Sources.* AP42 is located on the EPA web site at www.epa.gov/ttn/chief/ap42/

The file name refers to the reference number, the AP42 chapter and section. The file name "ref02_c01s02.pdf" would mean the reference is from AP42 chapter 1 section 2. The reference may be from a previous version of the section and no longer cited. The primary source should always be checked.

(53) (23) Paxton Report (parts)

GRAY
IRON FOUNDRIES 12.10
AP-42 Section ~~7.10~~
Reference Number
23

TABLE OF CONTENTS

		Page
I.	Introduction	1
II.	Summary and Discussion of Results	3
	A. Particulate Tests	3
	B. SO_2 Tests	5
	C. Total Hydrocarbon Measurements	5
	D. Carbon Monoxide Measurements	11
	E. Opacity Measurements	16
III.	Process Description and Operation	16
	A. Process Operation	16
	B. Process Description	18
IV.	Location of Sampling Points	20
V.	Sampling and Analytical Procedures	20
Appendix A -	Computer Printout of Field Data and Reduction for Particulate Tests	A-1
Appendix B -	Computer Printout of Field Data and Reduction for SO_2 Tests	B-1
Appendix C -	Example Calculations	C-1
Appendix D -	Strip Chart Records of Total Hydrocarbon Analyzer	D-1
Appendix E -	Strip Chart Records of CO Analyzer	E-1
Appendix F -	Field Data	F-1
Appendix G -	Sampling Procedures	G-1
Appendix H -	Laboratory Data	H-1
Appendix I -	Test Log	I-1
Appendix J -	Process Operation Data	J-1

TABLE OF CONTENTS (Continued)

LIST OF FIGURES

No.	Title	Page
1	Schematic Top View of the Sampling Location	2
2	Schematic Illustration of the Sampling Site	17
3	Cross-Sections of Sampling Ducts	22
G-1	Flow Diagram of the Total Hydrocarbon Instrument	G-3

LIST OF TABLES

No.	Title	Page
I	Summary of Results: Particulate	4
II	Summary of Results: SO_2	6
III	Summary of Total Hydrocarbon Measurements	7
IV	Summary of Results - Carbon Monoxide	12
V	Summary of Opacity Readings	18
VI	Traverse Points	22

I. INTRODUCTION

The purpose of the testing herein reported was to obtain data for setting new source performance standards, as authorized by the Clean Air Act.

The testing was performed by Midwest Research Institute (MRI) during the period of 29 September to 4 October 1974, at the Paxton-Mitchell foundry, Omaha, Nebraska. This plant is a batch-operated foundry with an electric arc furnace. (A batch is the melting cycle in the furnace, where about 6 tons of scrap steel and foundary returns are used. The duration of a batch is about 72 min.)

The Paxton-Mitchell foundry was selected as representative of the best control technology for an electric-arc furnace process. The average efficiency of particulate removal, as measured from our tests, is 97.44%.

The testing consisted of three runs in which sampling was performed from ports that were located at the inlet and the outlet of the baghouse (Figure 1). The baghouse, installed in 1969, is the major control device on the effluent flue gas stream. Nine leaking bags were discovered in preliminary inspections and were isolated by foundry personnel before MRI tests were started.

Each run comprised sampling for mass particulates at both the inlet and outlet of the baghouse; sampling for hydrocarbons (HC), sulfur dioxide (SO_2), and carbon monoxide (CO) at the outlet; instrumental determinations of HC and CO; and sampling for CO, CO_2, and O_2 at the outlet using an Orsat. The total samples per run were: two mass particulates, one HC, one SO_2, one CO and one Orsat. Visible emissions were also observed for each run.

The sampling procedures were identical to those described in the Federal Register, Vol. 36, No. 247, Part II, 23 December 1971, with some exceptions that are defined later in this report.

In summary, the test conducted for this project were:

1. Three particulate tests sampled from the inlet of the baghouse,

2. Three particulate tests sampled from the outlet of the baghouse,

3. Three SO_2 texts sampled from the outlet of the baghouse,

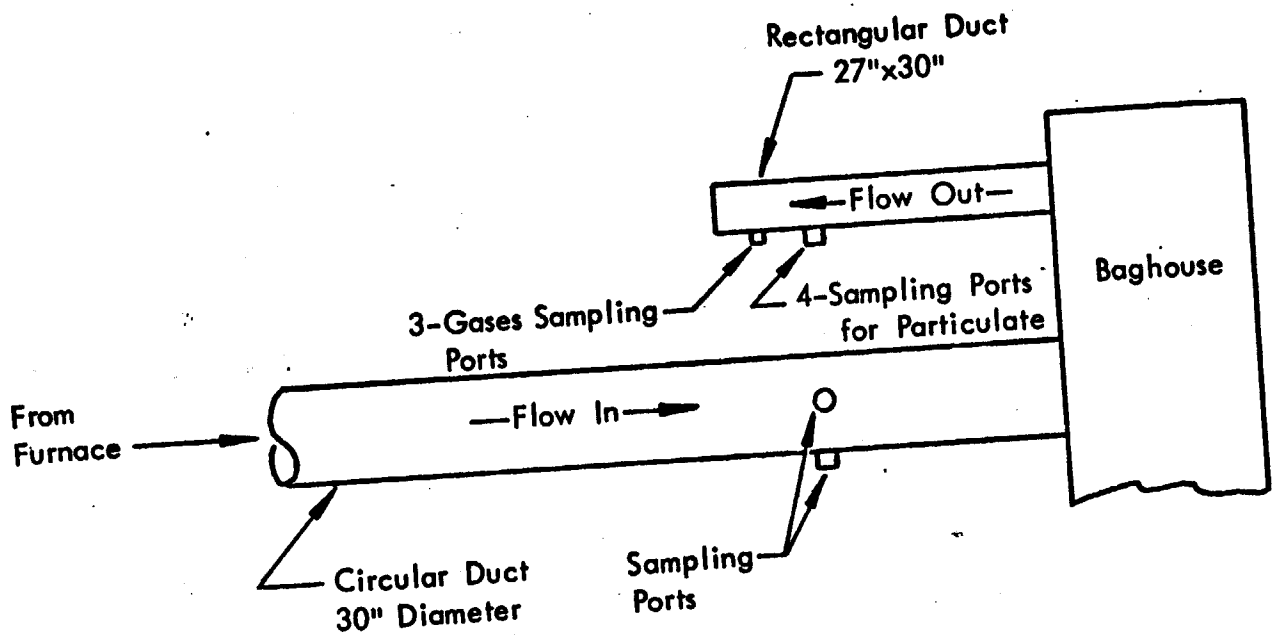

Figure 1 - Schematic Top View of the Sampling Location

4. Three Orsat tests sampled from the outlet of the baghouse,

5. Instrumental extraction samples continuously for the duration of each test for the HC and CO analyzers, and

6. Continuous visible emission reading for the duration of each test.

Section II of this report is a summary and discussion of the results.

Section III, the process description and operation, has been prepared by EPA.

Section IV presents the location of sampling points.

Section V presents the sampling and analytical procedures.

The 10 appendices comprise raw field data, as well as results of the analyses MRI performed.

II. SUMMARY AND DISCUSSION OF RESULTS

Runs Nos. 1 and 3 were conducted without interruption. Run No. 2 was interrupted four times. All interruptions were due to abnormal operation of the furnace and power loss. Times of interruption are shown in Appendix I.

A. Particulate Tests

Table I presents a summary of the results of the particulate tests conducted at the inlet and outlet of the baghouse. Appendix A contains the computer printout of field data and results of the particulate tests. The particulate-load, or total-catch, data are presented as grains per dry standard cubic foot (gr/dscf), milligrams per normal cubic meter (mg/ncm), pounds per hour (lb/hr), pounds per ton process feed (lb/ton), kilograms per hour (kg/hr), and kilograms per metric ton process feed (kg/mton). The average particulate-load value of the three runs at the inlet to the baghouse is 0.40 gr/dscf, 913.45 mg/ncm, 69.81 lb/hr, 17.45 lb/ton, 31.663 kg/hr, or 8.726 kg/mton. The average particulate-load value of the three runs at the outlet of the baghouse is 0.011 gr/dscf, 24.22 mg/ncm, 1.46 lb/hr, 0.37 lb/ton, 0.663 kg/hr, or 0.183 kg/mton. The average particulate removal efficiency is 97.44%.

TABLE I

SUMMARY OF RESULTS: PARTICULATE

	Run	Date	Particulate Load (total catch) (gr/dscf)[a]	(mg/ncm)[a]	(lb/hr)[a]	(lb/ton)[a]	(kg/hr)[a]	(kg/mton)[a]	Particulate Removal Efficiency[b] (%)
Inlet to Baghouse	1-I	1 Oct. 74	0.43	975.38	70.02	17.51	31.760	8.752	
	2-I	2 Oct. 74	0.29	672.05	60.05	15.01	27.236	7.506	
	3-I	3 Oct. 74	0.48	1092.93	79.35	19.84	35.994	9.919	
		Average	0.40	913.45	69.81	17.45	31.663	8.726	
Outlet from Baghouse	1-0	1 Oct. 74	0.024	53.85	3.06	0.77	1.389	0.383	94.41
	2-0	2 Oct. 74	0.003	7.33	0.55	0.14	0.247	0.068	98.96
	3-0	3 Oct. 74	0.005	11.49	0.78	0.20	0.353	0.097	98.96
		Average	0.011	24.22	1.46	0.37	0.663	0.183	97.44

a/ gr/dscf = grains per dry standard cubic foot
mg/ncm = milligrams per normal cubic meter
lb/hr = pounds per hour
lb/ton = pounds particulate emissions per ton process feed
kg/hr = kilograms per hour
kg/mton = kilograms particulate emissions per metric ton process feed

b/ Using gr/dscf data of computer printout. Average found using the efficiency averages.

17,250 ACFM
275°F

Stack gas flow rate at inlet

	actual ACFM	dry DCFM
	21783	19166
	26815	23855
	22086	19387
avg	23561	20803

The large difference in the outlet particulate catch between Run No. 1 of 0.024 gr/dscf and Runs Nos. 2 and 3 of 0.003 and 0.005 gr/dscf, respectively, is believed to be due to the operational conditions of the baghouse, and the kind of charge to the furnace.

The emission factor as pounds per ton process feed is based on a process feed rate of 4.0 tons/hr. This is an engineering approximation selected for a cyclic-batch type process by Mr. Naum T. Georgieff of EPA.

The percent isokinetic values (given in Appendix A) of the six Method-5 runs were 106.7, 104.9, 103.3, 103.8, 122.3, and 105.4 for Runs 1 through 6, respectively. The isokinetic of Run No. 3 inlet was 122.3 which is 12.3% higher than the accepted range of Method 5 of the Federal Register. The main reason for this high value was due to erroneous setting of the nomograph for the first four points.

Sample calculations of particulate emissions are given in Appendix C.

B. SO_2 Tests

Table II presents a summary of the results of sampling for SO_2 emissions. (Computer printouts for the SO_2 tests are given in Appendix B.)

The SO_2 emissions were 2.7, 4.1 and 29.2 lb x 10^{-7}/dscf, or 1.7, 2.5 and 17.7 ppm for Runs Nos. 1, 2 and 3, respectively. Actually, the process itself does not produce SO_2. The source of SO_2 is from the oil adhering to the surface of the scrap metal, and from the sulfur in the electrodes. Since there can be considerable variation in the physical size of the scrap metal (small turnings providing more SO_2 than the large pieces), the variations of SO_2 emissions between runs are believed to be realistic.

Sample calculations of SO_2 emissions are given in Appendix C.

C. Total Hydrocarbon Measurements

Table III presents a summary of the total hydrocarbon (THC) measurements which were made with a Beckman Model 6800 Total Hydrocarbon Analyzer (FID). The measurements were recorded on a strip-chart recorder, and these records are given in Appendix D. The same attenuation setting was used for all runs. The values of the THC's in parts per million given in the third column were determined from the relationship:

TABLE II

SUMMARY OF RESULTS: SO_2

Run	Date	SO_2 lb/dscf[a] x 10^{-7}	SO_2 ppm[a]
1	1 Oct. 74	2.7	1.7
2	2 Oct. 74	4.1	2.5
3	3 Oct. 74	29.2	17.7

a/ lb/dscf = pounds per dry standard cubic foot
ppm = parts per million

TABLE III

SUMMARY OF TOTAL HYDROCARBON MEASUREMENTS

RUN NO. 1 10/1/74

Calibration Gas: Peak Height = 10.5 Divisions

Time	GAS Peak Height (divisions)	THC's (ppm)
3:37	11.5	5.72
3:42	3.5	1.74
3:47	4.0	1.99
3:52	4.0	1.99
3:57	3.0	1.49
4:02	5.0	2.49
4:07	6.0	2.98
4:12	5.0	2.49
4:17	5.0	2.49
4:22	4.5	2.24
4:27	8.0	3.98
4:32	7.0	3.48
4:37	6.5	3.23
4:42	5.0	2.49
4:47	4.5	2.24
4:52	11.0	5.47

TABLE III (Continued)

RUN NO. 2 10/2/74

Interruption

OFF 10:05-10:08
OFF 10:21-10:28
OFF 10:45- 3:22
OFF 4:02- 4:49

Calibration at beginning of Run No. 2: Gas Peak Ht. = 17.5 Divisions

Time	Peak Height (division)	THC's (ppm)
10:08	5.5	1.64
10:13	48.0	14.32
10:25	1.0	0.30
10:30	5.0	1.49
10:35	20.5	6.11

New Calibration: Gas Peak Ht. = 35.0 Divisions

3:26	38.5	5.74
3:31	33.0	4.92
3:36	31.0	4.62
3:41	42.5	6.34
3:46	40.5	6.04
3:51	33.0	4.92
3:56	30.5	4.36
4:01	29.0	4.33

TABLE III (Continued)

RUN NO. 2 10/2/74 (Continued):

New Calibration: Gas Peak Ht. = 10.5 Divisions

Time	Peak Height (division)	THC's (ppm)
4:36	16.5	8.20
4:41	15.0	7.46
4:46	4.0	1.99
4:51	13.5	6.71
4:56	18.5	9.20
5:01	13.5	6.71
5:06	18.5	9.20
5:11	18.0	8.95
5:16	17.5	8.70
5:21	25.0	12.43
5:26	20.0	9.94
5:31	18.0	8.95
5:36	28.0	13.92
5:41	23.0	11.43
5:46	22.5	11.19
5:51	24.0	11.93

TABLE III (Concluded)

RUN NO. 3 10/3/74

Calibration: Peak Ht. = 10.5 Divisions

Time	Peak Height (division)	THC's (ppm)
9:11	9.5	4.72
9:16	23.5	11.68
9:21	22.0	10.94
9:26	23.5	11.68
9:31	26.0	12.93
9:36	26.5	13.17
9:41	26.0	12.93
9:46	24.0	11.93
9:51	25.5	12.68
9:56	25.0	12.43
10:01	22.5	11.19
10:06	25.0	12.43
10:48	4.5	2.24
10:53	28.5	14.17
10:58	21.5	10.69
11:03	23.5	11.68
11:08	25.5	12.68
11:13	22.0	10.94
11:18	24.0	11.93
11:23	23.0	11.43
11:28	23.0	11.43
11:33	21.5	10.69
11:38	24.0	11.93
11:43	22.0	10.94
11:48	24.0	11.93

$$\text{THC's (in ppm)} = \frac{\left(\text{Concentration of calibration gas in ppm}\right)\left(\text{Peak height of the unknown in chart division}\right)}{\text{Peak height of calibration gas in chart divisions}},$$

where the concentration of the calibration gas was 5.22 ppm. For example, the amount of THC's for Run No. 1 at time 3:37 is:

$$\text{THC's} = \frac{5.22 \times 11.5}{10.5} = 5.72 \text{ ppm.}$$

Generally speaking, the concentration of THC's emissions increased from Run No. 1 through Run No. 3, which may be due to changes in scrap charges.

D. Carbon Monoxide Measurements

Table IV summarizes the CO emissions from Runs Nos. 1 through 3 in parts per million. A Beckman Model 215B NDIR Analyzer was used to measure the CO. (Strip-chart records of this CO analyzer are given in Appendix E.) The CO values given in this table were determined from the following relationship:

$$\text{CO (in ppm)} = \frac{\text{(Value of span gas in ppm) (measurement analog reading in divisions)}}{\text{Span gas analog reading in divisions}},$$

where the value of the span gas was 307 ppm for all runs, and the span gas analog readings were 48 divisions for all runs with the following exceptions: time 10:05 through 10:50 of Run No. 2 when it was 49.5 divisions, and times 10:48 through 11:53 of Run No. 3 when it was 47 divisions. For example, for time 15:20 of Run No. 1,

$$\text{CO} = \frac{307 \times 13.5}{48} = 86 \text{ ppm.}$$

TABLE IV

SUMMARY OF RESULTS - CARBON MONOXIDE

RUN NO. 1

Time	Analog Reading[a/]	CO (ppm)
15:20	13.5	86
15:25	3.5	22
15:30	7.0	45
15:35	15.0	96
15:40	18.0	115
15:45	22.0	141
15:50	22.0	141
15:55	20.0	128
16:00	22.0	141
16:05	14.0	90
16:10	46.0	294
16:15	21.0	134
16:20	17.0	109
16:25	18.0	115
16:30	11.5	74
16:35	3.0	19
16:40	10.5	67
16:45	14.5	93

a/ Divisions above base line.

TABLE IV (Continued)

RUN NO. 2

Time	Analog Reading[a/]	CO (ppm)
10:05	12.0	74[b/]
10:10	7.0	43[b/]
10:15	7.0	43[b/]
10:20	3.5	22[b/]
10:25	14.0	87[b/]
10:30	-1.0	0[b/]
10:35	5.0	31[b/]
10:40	-1.0	0[b/]
10:45	0.0	0[b/]
10:50	3.0	19[b/]
15:26	64.0	409
15:31	17.0	109
15:35	51.5	329
15:41	68.0	435
15:46	27.0	173
15:51	25.5	163
15:56	12.0	77
16:01	21.0	134
16:06	15.0	96
16:11	13.5	86
16:16	12.5	80
16:21	16.0	102
16:26	16.5	106
16:31	12.0	77
16:36	10.0	64
16:41	9.5	61

a/ Divisions above base line.
b/ Span gas divisions above base line = 49.5

TABLE IV (Continued)

RUN NO. 2 (Continued)

Time	Analog Reading[a/]	CO (ppm)
16:49	16.5	106
16:54	13.5	86
16:59	13.5	86
17:04	17.5	112
17:09	16.0	102
17:14	27.0	173
17:19	25.5	163
17:24	22.0	141
17:29	19.0	122
17:34	15.5	99
17:39	14.5	93
17:44	19.0	122
17:49	17.0	109
17:54	16.0	102

a/ Divisions above base line.

TABLE IV (Concluded)

RUN NO. 3

Time	Analog Reading[a/]	CO (ppm)
9:12	10.0	64
9:17	1.0	6
9:22	.5	3
9:27	1.0	6
9:32	4.0	26
9:37	6.5	42
9:42	13.0	83
9:47	11.5	74
9:52	13.5	86
9:57	9.0	58
10:02	8.5	54
10:07	6.5	42
10:12	6.0	38
10:17	12.5	80
10:22	7.5	48
10:27	11.5	74
10:32	9.5	61
10:37	12.5	80
10:48	14.0	91[c/]
10:53	8.0	52[c/]
10:58	7.0	46[c/]
11:03	15.5	101[c/]
11:08	7.5	49[c/]
11:13	7.5	49[c/]
11:18	21.0	137[c/]
11:23	14.5	95[c/]
11:28	12.5	82[c/]
11:33	13.5	88[c/]
11:38	12.5	82[c/]
11:43	10.5	69[c/]
11:48	11.5	75[c/]
11:53	12.0	78.

a/ Divisions above base line.
b/ Span gas divisions above base line = 49.5.
c/ Span gas divisions above base line = 47.
Note: Span gas divisions = 48 for all readings other than those of Footnotes b and c.

E. Opacity Measurements

There were two points of discharge for which opacity readings were taken: the stack and horizontal (outlet from baghouse, see Figures 1 and 2) duct. The stack read was the roof fans exhaust above the arc furnace tested. Each set of readings was taken by a different observer. For the stack, the distance to the base of the point of discharge was 40 ft, and the height of the point of discharge above ground level was 80 ft. For the duct, these two distances are 40 ft and 20 ft, respectively. The baghouse is located approximately 150 ft from the building that houses the arc furnace.

The results of visible emissions are summarized in Table V; field data sheets containing the observer's readings are given in Appendix F. The average percent opacity for the duct location of Runs Nos. 1, 2 and 3 was 0, 0.03, and 1.04, respectively; for the stack location they were 5.15, 4.66 and 3.97, respectively. The opacities of the stack emissions, on the average, were considerably more than those from the duct. The preponderance of observed higher opacities occurred during the first 5 to 10 min of the melt cycle which is considered normal for arc furnace operations.

III. PROCESS DESCRIPTION AND OPERATION*

A. Process Operation

1. Electric arc furnaces: Process operation was normal during all tests. Gray iron with a carbon level of about 3 to 3.1% was produced from the foundry's usual charge materials. The scrap charged did not appear to be particularly dirty or greasy.

Each test began when operations were started on the furnace. The first test was run for only 1 hr; i.e., only during one heat. However, the next two tests were extended over two heats to collect a greater quantity of dust on the filters. Each of these tests was started at the beginning of two consecutive heats and continued for an hour during each heat.

Brief delays, which are considered normal, occurred in the melting process. Unavailability of the overhead crane, temporary unavailability of power, need for metallurgical sampling, lack of storage space for molten metal, electrode replacements, stuck roof, etc., are all causes of delays. These conditions are reported in the log of process operations in Appendix J of this report.

---

* This section furnished by EPA.

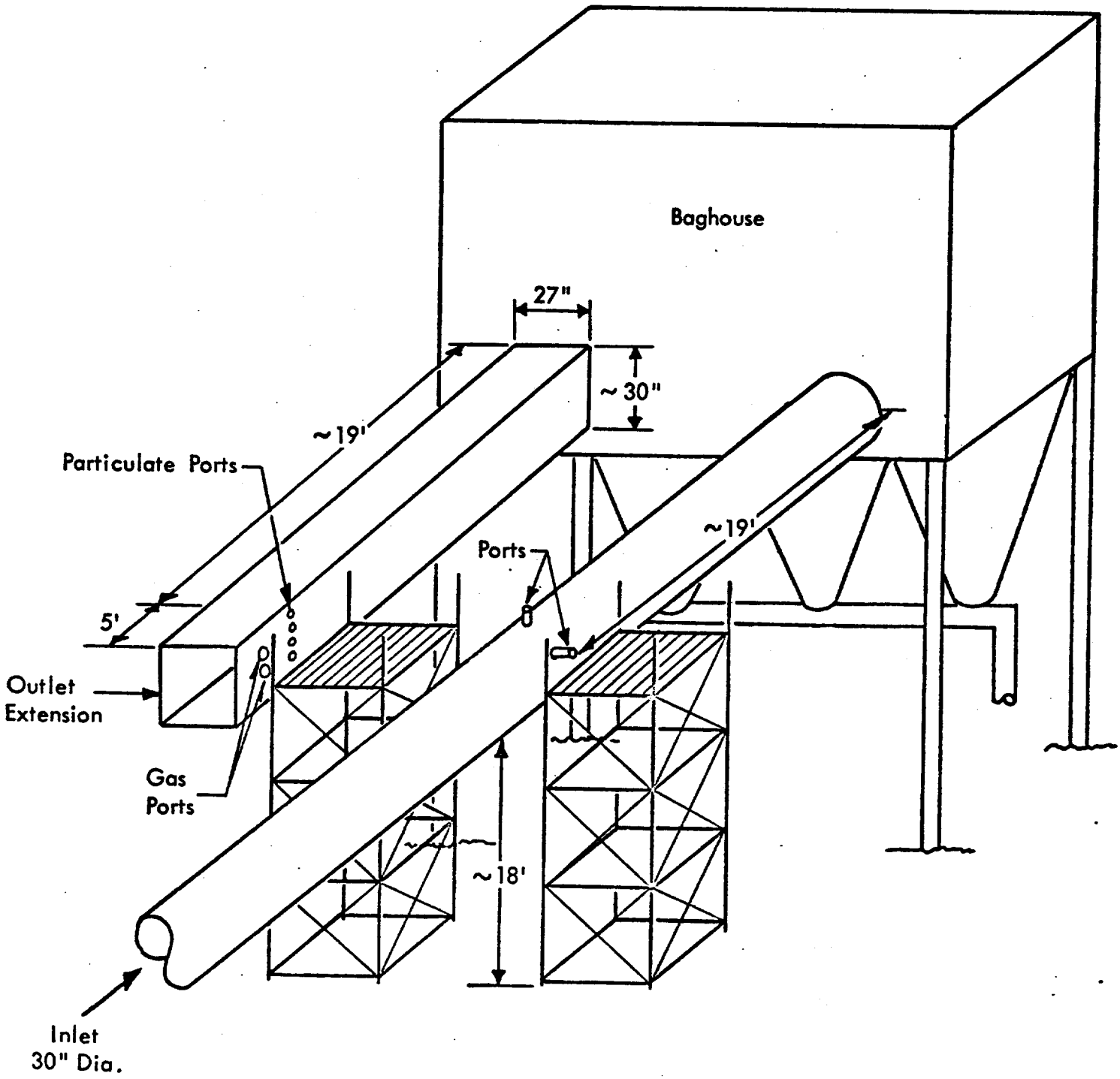

Figure 2 - Schematic Illustration of the Sampling Site

TABLE V

SUMMARY OF OPACITY READINGS

Run No.	1		2		3	
Date	10-01-74		10-02-74		10-03-74	
Location	Duct	Stack	Duct	Stack	Duct	Stack
Observer	1	2	1	2	1	2
Duration of observation (min)	87.25	120.0	205.50	300.0	81.75	63.0
Total No. of Readings	349.0	480.0	822.0	1,200.0	327.0	252.0
No. Readings unobservable	0.0	0.0	0.0	0.0	0.0	0.0
No. Readings 0% opacity	349.0	0.0	819.0	114.0	259.0	52.0
5	0.0	469.0	1.0	1,064.0	68.0	200.0
10	0.0	8.0	2.0	15.0	0.0	0.0
15	0.0	3.0	0.0	6.0	0.0	0.0
20	0.0	0.0	0.0	0.0	0.0	0.0
25	0.0	0.0	0.0	0.0	0.0	0.0
30	0.0	0.0	0.0	0.0	0.0	0.0
35	0.0	0.0	0.0	1.0	0.0	0.0
40 to 100	0.0	0.0	0.0	0.0	0.0	0.0
Percent Readings unobservable	0.0	0.0	0.0	0.0	0.0	0.0
0%	100.0	97.71	99.64	9.50	79.20	20.63
5	0.0	1.67	0.12	88.67	20.80	79.37
10	0.0	0.62	0.24	1.25	0.0	0.0
15	0.0	0.0	0.0	0.50	0.0	0.0
20	0.0	0.0	0.0	0.0	0.0	0.0
25	0.0	0.0	0.0	0.0	0.0	0.0
30	0.0	0.0	0.0	0.0	0.0	0.0
35	0.0	0.0	0.0	0.08	0.0	0.0
40 to 100	0.0	0.0	0.0	0.0	0.0	0.0
	100.0	100.00	100.00	100.00	100.00	100.00
Avg. Opacity = Sum of Nos. / No. Reading	0.0	5.15	0.03	4.66	1.04	3.97

2. Air pollution control system: The dust control system operated normally throughout the tests. The pressure drop across the compartments ranged between 2 and 7 in. of water gauge.

No stratifications or layering of particulate emissions (that sometimes occur) were observed in the furnace or scrap bay areas. The atmosphere in the melting bay area was clear at all times. During charging, dark colored emissions were visible above the furnace (probably soot from burned oil) for several seconds. They were carried up by the heat impetus and upon reaching the velocity contours of the roof fan located above the furnace, they dissipated and were no longer visible.

B. Process Description

1. Electric arc furnaces: The Paxton-Mitchell foundry in Omaha, Nebraska, produces gray iron for castings in the furnace tested, which has a design capacity of 6 tons of iron per heat (about 4 tons/hr). The furnace is located in a bay together with an induction holding furnace. The scrap bay (under the same roof) is located next to and in line with the furnace's bay with the transformer house separating both bays.

The furnace is manufactured by the Whitting Corporation with a diameter of 8 ft, 6 in. and has a swivelling roof for bucket charging.

The power is supplied by a 3000 KVA high voltage transformer with four taps on the secondary coil. Normally, only Taps Nos. 1, 2, and 3 are used.

The composition of a typical charge is as follows:

Material	Pounds
Steel	4,000
Returns	8,000
Coke	150
67% Mn	30
Total	12,180

The steel is pieces of automobile scrap or structural material (I-beams, channels, beton rods, etc.). The returns are defective castings from the foundry. The returns also include sprues, end gates, and risers from castings. They use carbon (carbon riser) from several different suppliers. The amount of carbon, and Mn additives added to the charge does not vary much, if at all. Power is supplied from Tap No. 2 to melt the scrap as quickly as possible. Tap No. 2 has 183 volts. As soon as a large pool of molten metal is formed and the bath becomes flat, power is switched by changing to Tap No. 1 (235 volts). It takes about 30 min to achieve a flat bath. The furnace remains on Tap No. 1 for 30 to 25 min of refining. During this time the furnace is slagged and the chemistry is checked and adjusted. These operations last about 10 min.

Next, the slag is removed with the power off and the electrodes lifted slightly. The furnace is tilted about 5 degrees and the slag is skimmed from the surface of the metal bath. If the proper chemistry of the gray iron has been achieved, the furnace is ready for tapping.

Power is then supplied again from Tap No. 3 (136 volts) to superheat the metal to about 2650°F prior to tapping.

During tapping, the furnace is tilted 45 degrees to pour the metal into the transfer ladle. Power is off and the connection between the furnace hood and the exhaust duct is broken during this operation. The molten metal is transferred to the induction holding furnace.

The high transformer rating (Ultra High Power), rapid analyses and temperature checks, and precise control of the metallurgy by a well-trained team result in a very short melting time of 70 min or slightly more per heat.

2. Air pollution control system: Emissions are evacuated from the furnaces via a side draft hood, a spout pouring hood and a slag door hood. They are collected in a baghouse upstream of a radial type fan. Emissions during charging, tapping, and slagging are partially captured by a fan of 30,000 cfm capacity located above the furnace During slagging, the hood on the furnaces remains in operation, the angle of tilt being only 10 degrees.

Several fans located in the scrap roof of both bay areas evacuate fumes that by-pass the furnace bay area fan. They are also used for general ventilation of fumes and removal of heat from the melt shop. The height from the top of the furnace hood to the roof of the building is about 40 ft.

The baghouse, manufactured by Wheelabrator, shakes the bag (activated manually) for a set time when the heat is finished, the space above the furnace receives too much fumes, or the temperature of the outgoing gases rises to a preset level. In the latter case, the fan is cut off, which automatically triggers the shaking mechanism. After stopping the fan, a screw conveyor removes dust released by the shaking mechanism. The shaking continues for at least 5 to 7 min. Afterward the fan can be started. Following shaking the pressure drop is 2 in. water gauge. There are 736 bags, 14 ft long and 5.5 in. in diameter. The bags are made of Dacron and can withstand a maximum temperature of 275°F. The cloth area of the bags is 6,740 sq ft and the fan throughput is about 17,250 actual cubic feet per minute. The baghouse has three hoppers which all empty into a common screw conveyor.

IV. LOCATION OF SAMPLING POINTS

The inlet duct was circular, and the outlet duct was rectangular. Four vertical ports for particulate sampling were installed on the outlet duct in a plane perpendicular to the flow. Two additional ports were provided for gaseous sampling. Two ports were installed at the inlet duct 90 degrees apart in a plane perpendicular to the flow. The outlet duct was constructed and installed by MRI.

Figure 2 shows a schematic illustration of the sampling locations. The inlet sampling ports were located approximately 19 ft upstream from the baghouse. The nearest obstructions to the inlet and outlet sampling ports were more than eight duct diameters upstream and more than two duct diameters downstream.

Table VI gives information on the location of the traverse points. The number of traverse points was determined by Method 1 of the Federal Register. Duct cross-sections showing the sampling points are given in Figure 3.

V. SAMPLING AND ANALYTICAL PROCEDURES

Preliminary velocity and moisture contents of the flue gas were determined by Federal Register Methods 2 and 4 before the actual test sampling started. The data from this run were used to set the sampling equipment for isokinetic sampling for the particulate tests.

TABLE VI

TRAVERSE POINTS

Traverse Point No.	% of duct I.D. to traverse point		Distance from inside wall of Duct in in.	
	Inlet	Outlet	Inlet	Outlet
1	4.4	16.6	1.32	4.43
2	14.7	50.0	4.41	13.28
3	29.5	83.4	8.85	22.13
4	70.5		21.15	
5	85.3		25.59	
6	95.6		28.68	

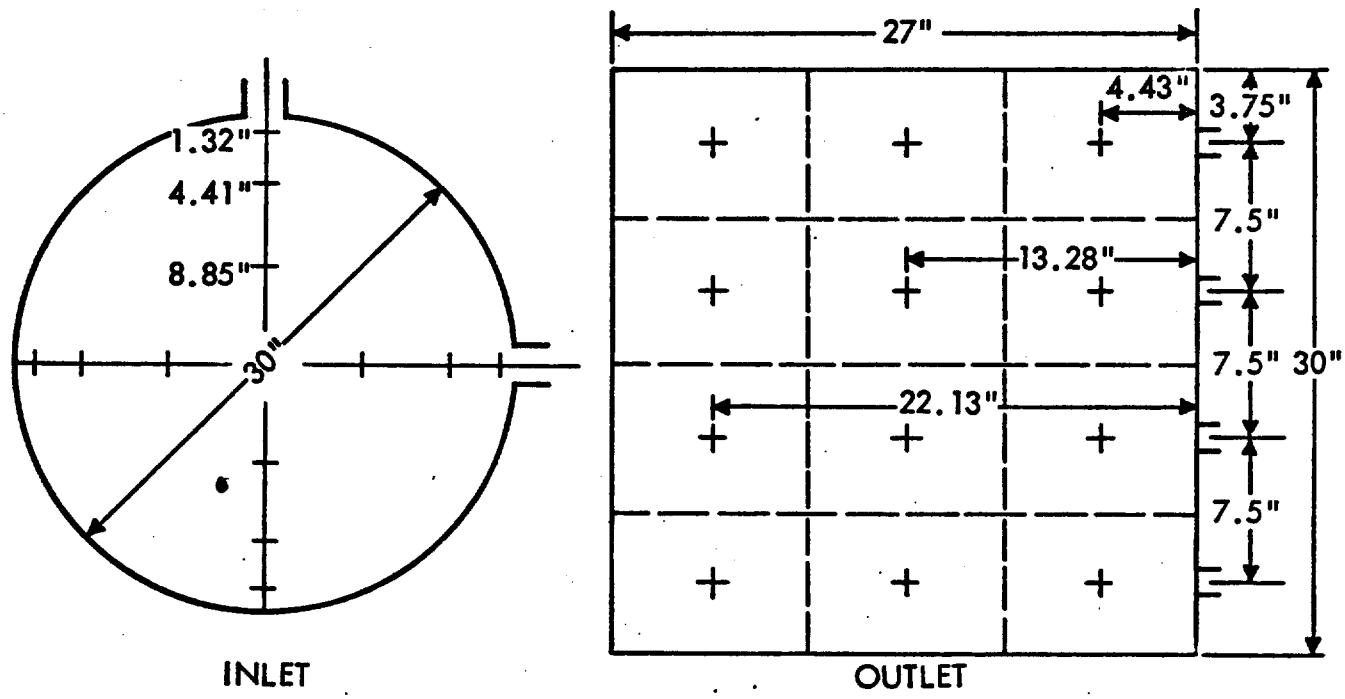

Figure 3 - Cross-Sections of Sampling Ducts

Particulate sampling and analysis were done according to Method 5 of the Federal Register. Twelve traverse points were used to sample for particulates. The sampling time on the inlet and outlet ducts was 5 min/traverse point for a total of 60 min for Run No. 1, and 10 min/traverse point for a total of 120 min for Runs Nos. 2 and 3. The time was extended for Runs Nos. 2 and 3 because of suspected insufficient amount of particulate collected on the outlet train's filter. Run No. 1 was conducted during one furnace heat, while Runs Nos. 2 and 3 were conducted during two heat periods. Particulate sampling was initiated with baghouse fan startup at the beginning of the heat in order to ensure collection of the initial surge of dust characteristic to arc furnace operations.

Gas sampling for flue-gas compositions (THC's, CO, O_2, CO_2, SO_2 and N_2) was done from different ports downstream from the outlet particulate ports. Method 6 of the Federal Register was followed in sampling and analyzing for SO_2. Method 9 was followed for the opacity readings. Carbon monoxide and flue gas composition samples were collected and analyzed according to Methods 10 and 3, respectively.

A Beckman Model 6800 Total Hydrocarbon Analyzer was used to detect the levels of hydrocarbons of the emissions; a Beckman Model 215B NDIR Analyzer was used to detect CO emissions. The results of both THC and CO measurements were recorded on strip-chart recorders.

Values were read manually from these charts and the formulas given in Section II were used to obtain the emission results given in Tables III and IV. An Orsat was used to analyze for CO, CO_2 and O_2 according to Method 3 of the Federal Register.

APPENDIX A

COMPUTER PRINTOUT OF FIELD DATA AND REDUCTION FOR PARTICULATE TESTS

PARTICULATE DATA AND CALCULATED VALUES

RUN- 1-I DATE- 10-01-74

ATMOS TEMP (DG.F)	ATMOS PRES (I.HG)	STACK VAC (I.H2O)	H2O COND (ML)	PARTIC WT-PTL (MG)	PARTIC WT-TTL (MG)	STACK AREA (FT2)	INIT VOL (DCF)	PERC O2 DRY	PERC CO2 DRY	PERC CO DRY	PITOT TUBE COEF
60.0	29.36	1.20	3.6	572.30	591.30	4.91	740.00	19.7	.8	0.0	.850

PORT-POINT	SAMP TIME (MIN)	METER VOL (DCF)	DELTA P (I.H2O)	DELTA H (I.H2O)	TEMP IN (D.F)	TEMP OUT (D.F)	TRAIN VAC (I.HG)	STACK TEMP (D.F)	BOX TEMP (D.F)	PROBE T DIA (IN)	VEL (FPM)
T 1	5.00	742.31	2.100	.540	62.0	62.0	3.0	125.0		.125	5258.4
T 2	5.00	744.53	2.300	.610	65.0	62.0	3.0	115.0	60.0	.125	5455.9
T 3	5.00	746.72	2.250	.600	68.0	63.0	3.0	112.0		.125	5382.1
T 4	5.00	748.79	2.000	.530	72.0	63.0	3.0	110.0		.125	5065.5
T 5	5.00	750.87	2.000	.530	73.0	63.0	3.0	112.0		.125	5074.3
T 6	5.00	752.58	1.400	.370	74.0	63.0	3.0	115.0		.125	4256.6
S 1	5.00	754.28	1.350	.360	64.0	63.0	2.0	127.0		.125	4223.3
S 2	5.00	756.00	1.400	.370	65.0	63.0	2.0	130.0		.125	4311.8
S 3	5.00	757.59	1.250	.310	68.0	64.0	2.0	160.0		.125	4176.5
S 4	5.00	759.02	.940	.240	70.0	64.0	2.0	180.0		.125	3679.8
S 5	5.00	760.31	.800	.200	72.0	66.0	2.0	120.0		.125	3231.7
S 6	5.00	761.59	.790	.200	72.0	66.0	2.0	90.0		.125	3127.2

PARTICULATE DATA AND CALCULATED VALUES

RUN- 1-0 DATE- 10-01-74

ATMOS TEMP (DG.F)	ATMOS PRES (I.HG)	STACK VAC (I.H2O)	H2O COND (ML)	PARTIC WT-PTL (MG)	PARTIC WT-TTL (MG)	STACK AREA (FT2)	INIT VOL (DCF)	PERC O2 DRY	PERC CO2 DRY	PERC CO DRY	PITOT TUBE COEF
60.0	29.36	0.00	6.3	29.90	88.80	5.63	458.11	19.7	.8	0.0	.850

PORT-	POINT	SAMP TIME (MIN)	METER VOL (DCF)	DELTA P (I.H2O)	DELTA H (I.H2O)	TEMP IN (D.F)	TEMP OUT (D.F)	TRAIN VAC (I.HG)	STACK TEMP (D.F)	BOX TEMP (D.F)	PROBE T DIA (IN)	VEL (FPM)
1	1	5.00	463.65	1.050	4.000	60.0	80.0	11.0	108.0		.250	3656.4
1	2	5.00	469.65	.950	4.300	74.0	80.0	13.0	103.0		.250	3462.6
1	3	5.00	475.21	.850	3.300	82.0	62.0	11.0	102.0		.250	3272.3
2	1	5.00	479.78	.890	3.400	76.0	64.0	11.0	104.0		.250	3354.4
2	2	5.00	485.52	.760	2.700	84.0	64.0	12.0	106.0		.250	3105.2
2	3	5.00	490.53	.730	2.900	90.0	66.0	9.0	106.0		.250	3043.3
3	1	5.00	495.85	.800	3.100	80.0	66.0	9.0	106.0		.250	3165.9
3	2	5.00	500.67	.650	2.600	86.0	68.0	8.0	113.0		.250	2889.4
3	3	5.00	505.19	.550	2.200	88.0	68.0	7.0	116.0		.250	2664.9
4	1	5.00	509.43	.500	2.000	82.0	68.0	7.0	126.0		.250	2562.8
4	2	5.00	513.55	.450	1.800	84.0	70.0	7.0	140.0		.250	2460.2
4	3	5.00	517.43	.360	1.400	78.0	70.0	7.0	115.0		.250	2154.1

PARTICULATE DATA AND CALCULATED VALUES

RUN- 2-I DATE- 10-02-74

ATMOS TEMP (DG.F)	ATMOS PRES (I.HG)	STACK VAC (I.H2O)	H2O COND (ML)	PARTIC WT-PTL (MG)	PARTIC WT-TTL (MG)	STACK AREA (FT2)	INIT VOL (DCF)	PERC O2 DRY	PERC CO2 DRY	PERC CO DRY	PITOT TUBE COEF
42.0	29.46	2.00	1.1	958.70	982.20	4.91	764.00	17.7	3.9	0.0	.850

PORT-POINT	SAMP TIME (MIN)	METER VOL (DCF)	DELTA P (I.H2O)	DELTA H (I.H2O)	TEMP IN (D.F)	TEMP OUT (D.F)	TRAIN VAC (I.HG)	STACK TEMP (D.F)	BOX TEMP (D.F)	PROBE T DIA (IN)	VEL (FPM)
T 1	5.00	766.38	2.900	.720	50.0	45.0	3.0	105.0		.125	6015.5
T 2	5.00	768.78	3.050	.750	58.0	48.0	3.0	100.0		.125	6141.7
T 3	5.00	771.16	3.150	.770	64.0	49.0	3.0	102.0		.125	6252.7
T 4	5.00	773.50	2.850	.700	66.0	52.0	3.0	95.0	50.0	.125	5910.4
T 5	5.00	775.86	2.600	.650	66.0	58.0	3.0	110.0		.125	5721.0
T 6	5.00	777.95	2.100	.530	68.0	62.0	3.0	90.0		.125	5050.5
T 6	5.00	780.00	2.100	.530	72.0	64.0	3.0	80.0		.125	5004.4
T 5	5.00	782.16	2.300	.580	76.0	66.0	3.0	120.0		.125	5427.8
T 4	5.00	784.37	2.350	.590	82.0	68.0	4.0	140.0		.125	5580.3
T 3	5.00	786.65	2.600	.650	86.0	70.0	4.0	150.0	55.0	.125	5918.3
T 2	5.00	788.88	2.300	.580	92.0	73.0	4.0	148.0		.125	5557.3
T 1	5.00	791.06	2.200	.570	94.0	76.0	4.0	155.0		.125	5466.3
S 1	5.00	793.34	2.500	.660	77.0	76.0	4.0	140.0		.125	5755.5
S 1	5.00	795.63	2.450	.640	80.0	76.0	4.0	132.0		.125	5659.6
S 2	5.00	797.94	2.550	.660	86.0	76.0	4.0	125.0		.125	5739.8
S 2	5.00	800.26	2.500	.660	91.0	78.0	4.0	120.0	60.0	.125	5658.9
S 3	5.00	802.59	2.500	.660	95.0	78.0	4.0	130.0		.125	5707.4
S 3	5.00	804.92	2.500	.660	98.0	80.0	5.0	115.0		.125	5634.4
S 4	5.00	807.17	2.250	.590	102.0	83.0	4.0	125.0		.125	5391.6
S 4	5.00	809.36	2.150	.570	103.0	84.0	4.0	135.0		.125	5315.2
S 5	5.00	811.40	1.850	.490	104.0	85.0	4.0	132.0		.125	4916.0
S 5	5.00	813.39	1.750	.470	104.0	86.0	4.0	140.0	65.0	.125	4815.5
S 6	5.00	815.19	1.350	.360	105.0	88.0	4.0	135.0		.125	4211.8
S 6	5.00	816.96	1.350	.360	104.0	89.0	4.0	140.0		.125	4229.5

PARTICULATE DATA AND CALCULATED VALUES

RUN- 2-0 DATE- 10-02-74

ATMOS TEMP (DG.F)	ATMOS PRES (I.HG)	STACK VAC (I.H2O)	H2O COND (ML)	PARTIC WT-PTL (MG)	PARTIC WT-TTL (MG)	STACK AREA (FT2)	INIT VOL (DCF)	PERC O2 DRY	PERC CO2 DRY	PERC CO DRY	PITOT TUBE COEF
42.0	29.48	0.00	0.0	12.40	31.30	5.63	518.78	17.7	3.9	0.0	.850

PORT-	POINT	SAMP TIME (MIN)	METER VOL (DCF)	DELTA P (I.H2O)	DELTA H (I.H2O)	TEMP IN (D.F)	TEMP OUT (D.F)	TRAIN VAC (I.HG)	STACK TEMP (D.F)	BOX TEMP (D.F)	PROBE T DIA (IN)	VEL (FPM)
1	1	5.00	525.51	1.800	5.500	66.0	57.0	18.0	107.0		.250	4734.8
1	1	5.00	532.24	1.800	5.500	74.0	54.0	18.0	107.0		.250	4734.8
1	2	5.00	538.81	1.500	5.300	82.0	56.0	18.0	85.0		.250	4237.6
1	2	5.00	545.37	1.400	5.300	68.0	66.0	18.0	86.0		.250	4097.6
1	3	5.00	551.91	1.200	4.900	80.0	64.0	18.0	90.0		.250	3807.6
1	3	5.00	558.58	1.200	5.000	92.0	66.0	18.0	92.0		.250	3814.5
2	1	5.00	565.30	1.500	5.200	96.0	70.0	18.0	110.0		.250	4333.7
2	1	5.00	572.02	1.400	5.200	108.0	72.0	18.0	117.0		.250	4212.4
2	2	5.00	578.87	.950	5.200	116.0	78.0	18.0	126.0		.250	3496.9
2	2	5.00	585.72	.950	5.200	120.0	80.0	18.0	118.0		.250	3473.0
2	3	5.00	592.92	1.100	5.200	123.0	83.0	18.0	107.0		.250	3701.4
2	3	5.00	599.16	1.100	4.500	125.0	86.0	15.0	107.0		.250	3701.4
3	1	5.00	605.94	1.300	5.200	88.0	80.0	18.0	120.0		.250	4069.7
3	1	5.00	612.71	1.300	5.200	108.0	80.0	18.0	107.0		.250	4023.8
3	2	5.00	618.01	1.200	5.000	114.0	82.0	18.0	100.0		.250	3842.0
3	2	5.00	623.31	1.200	5.000	118.0	84.0	18.0	100.0		.250	3842.0
3	3	5.00	631.66	1.200	5.000	123.0	87.0	18.0	100.0		.250	3842.0
3	3	5.00	640.01	1.200	5.000	126.0	90.0	17.0	95.0		.250	3824.8
4	1	5.00	646.65	1.100	4.500	123.0	90.0	14.0	105.0		.250	3694.6
4	1	5.00	652.70	1.000	4.100	125.0	93.0	14.0	110.0		.250	3538.4
4	2	5.00	659.35	1.100	4.500	128.0	94.0	14.0	114.0		.250	3724.1
4	2	5.00	665.40	1.000	4.100	129.0	95.0	13.0	122.0		.250	3575.5
4	3	5.00	671.46	.850	3.700	130.0	96.0	12.0	116.0		.250	3279.4
4	3	5.00	676.87	.800	3.300	130.0	98.0	10.0	128.0		.250	3214.5

PARTICULATE DATA AND CALCULATED VALUES

RUN- 3-I DATE- 10-03-74

ATMOS TEMP (DG.F)	ATMOS PRES (I.HG)	STACK VAC (I.H2O)	H2O COND (ML)	PARTIC WT-PTL (MG)	PARTIC WT-TTL (MG)	STACK AREA (FT2)	INIT VOL (DCF)	PERC O2 DRY	PERC CO2 DRY	PERC CO DRY	PITOT TUBE COEF
55.0	29.18	0.00	5.4	1489.60	1537.00	4.91	837.90	20.0	3.8	0.0	.850

PORT-POINT	SAMP TIME (MIN)	METER VOL (DCF)	DELTA P (I.H2O)	DELTA H (I.H2O)	TEMP IN (D.F)	TEMP OUT (D.F)	TRAIN VAC (I.HG)	STACK TEMP (D.F)	BOX TEMP (D.F)	PROBE T DIA (IN)	VEL (FPM)
T 1	5.00	841.71	.450	1.800	60.0	52.0	5.5	120.0	50.0	.125	2406.0
T 1	5.00	845.21	.450	1.800	66.0	54.0	5.5	120.0		.125	2406.0
T 2	5.00	847.50	.150	.550	72.0	56.0	2.0	100.0		.125	1364.9
T 2	5.00	849.39	.110	.400	74.0	57.0	2.0	110.0		.125	1174.2
T 3	5.00	851.49	2.500	.680	74.0	60.0	2.0	110.0		.125	5621.8
T 3	5.00	853.84	2.300	.630	77.0	63.0	2.0	130.0	50.0	.125	5486.0
T 4	5.00	855.83	2.000	.500	80.0	66.0	2.0	140.0		.125	5154.9
T 4	5.00	857.89	1.800	.580	82.0	67.0	3.0	180.0		.125	5054.7
T 5	5.00	859.67	1.500	.390	85.0	70.0	3.0	150.0		.125	4504.8
T 5	5.00	861.38	1.400	.370	86.0	71.0	3.0	160.0		.125	4387.6
T 6	5.00	863.12	1.500	.400	88.0	72.0	3.0	90.0	50.0	.125	4277.5
T 6	5.00	864.61	1.300	.350	89.0	74.0	3.0	100.0	50.0	.125	4018.2
S 1	5.00	866.35	2.700	.690	75.0	74.0	5.0	130.0	50.0	.125	5943.9
S 1	5.00	868.69	2.600	.690	78.0	74.0	5.0	120.0	50.0	.125	5783.2
S 2	5.00	871.09	2.700	.700	84.0	75.0	5.0	130.0	50.0	.125	5943.9
S 2	5.00	873.49	2.700	.700	89.0	76.0	5.0	120.0	50.0	.125	5893.4
S 3	5.00	875.82	2.500	.650	92.0	78.0	5.0	130.0	50.0	.125	5719.6
S 3	5.00	878.15	2.500	.650	96.0	78.0	5.0	130.0	50.0	.125	5719.6
S 4	5.00	880.30	2.000	.520	98.0	80.0	6.0	120.0	50.0	.125	5072.2
S 4	5.00	882.20	1.800	.470	98.0	82.0	5.5	120.0	50.0	.125	4811.9
S 5	5.00	884.26	1.700	.450	99.0	83.0	5.5	120.0	50.0	.125	4676.3
S 5	5.00	886.04	1.400	.350	100.0	84.0	5.5	150.0	50.0	.125	4352.1
S 6	5.00	887.77	1.400	.350	100.0	85.0	5.5	120.0	50.0	.125	4243.7
S 6	5.00	889.43	1.200	.310	100.0	85.0	5.5	120.0	50.0	.125	3924.9

PARTICULATE DATA AND CALCULATED VALUES

RUN- 3-0 DATE- 10-03-74

ATMOS TEMP (DG.F)	ATMOS PRES (I.HG)	STACK VAC (I.H2O)	H2O COND (ML)	PARTIC WT-PTL (MG)	PARTIC WT-TTL (MG)	STACK AREA (FT2)	INIT VOL (DCF)	PERC O2 DRY	PERC CO2 DRY	PERC CO DRY	PITOT TUBE COEF
55.0	29.18	0.00	5.3	24.20	45.30	5.63	732.83	20.0	3.8	0.0	.850

PORT-	POINT	SAMP TIME (MIN)	METER VOL (DCF)	DELTA P (I.H2O)	DELTA H (I.H2O)	TEMP IN (D.F)	TEMP OUT (D.F)	TRAIN VAC (I.HG)	STACK TEMP (D.F)	BOX TEMP (D.F)	PROBE T DIA (IN)	VEL (FPM)
1	1	5.00	740.10	1.700	6.000	64.0	54.0	18.0	114.0		.250	4649.1
1	1	5.00	746.70	1.700	6.000	76.0	55.0	18.0	112.0		.250	4641.0
1	2	5.00	754.20	1.300	5.800	92.0	60.0	16.0	103.0		.250	4026.3
1	2	5.00	761.04	1.300	5.800	100.0	62.0	16.0	105.0		.250	4033.5
1	3	5.00	767.80	1.100	4.400	108.0	66.0	10.0	106.0		.250	3713.6
1	3	5.00	773.49	1.000	4.000	106.0	70.0	9.0	106.0		.250	3540.7
2	1	5.00	780.51	1.300	5.200	110.0	72.0	13.0	118.0		.250	4079.6
2	1	5.00	786.55	1.200	4.800	108.0	74.0	12.0	130.0		.250	3960.1
2	2	5.00	792.44	.750	3.100	108.0	78.0	7.0	160.0		.250	3209.3
2	2	5.00	797.10	.700	2.700	108.0	78.0	6.0	150.0		.250	3075.4
2	3	5.00	802.41	.700	2.700	106.0	80.0	6.0	152.0		.250	3060.4
2	3	5.00	807.19	.680	2.600	106.0	80.0	6.0	145.0		.250	3018.7
3	1	5.00	815.05	1.600	6.200	82.0	74.0	17.0	123.0		.250	4545.5
3	1	5.00	822.01	1.600	6.200	96.0	74.0	17.0	120.0		.250	4533.6
3	2	5.00	829.30	1.200	4.700	108.0	77.0	11.0	119.0		.250	3923.0
3	2	5.00	835.53	1.200	4.700	113.0	79.0	11.0	115.0		.250	3909.4
3	3	5.00	842.34	1.100	4.400	115.0	81.0	11.0	117.0		.250	3749.5
3	3	5.00	848.43	1.100	4.400	116.0	84.0	11.0	117.0		.250	3749.5
4	1	5.00	854.50	.950	3.800	110.0	83.0	8.0	125.0		.250	3508.5
4	1	5.00	859.58	.800	3.100	112.0	87.0	7.0	119.0		.250	3203.1
4	2	5.00	865.20	.750	3.000	114.0	88.0	7.0	125.0		.250	3117.4
4	2	5.00	870.15	.700	2.800	114.0	90.0	7.0	150.0		.250	3075.4
4	3	5.00	875.10	.500	2.000	114.0	90.0	4.0	140.0		.250	2577.8
4	3	5.00	879.10	.460	1.900	113.0	90.0	4.0	135.0		.250	2462.2

PARTICULATE EMISSION DATA

NAME	DESCRIPTION	UNITS	1-I	1-O	2-I	2-O
	DATE OF RUN		10-01-74	10-01-74	10-02-74	10-02-74
DN	PROBE TIP DIAMETER	IN	.125	.250	.125	.250
TT	NET TIME OF RUN	MIN	60.0	60.0	120.0	120.0
PB	BAROMETRIC PRESSURE	IN.HG	29.35	29.35	29.45	29.45
PS	AVG ORIFICE PRES DROP	IN.H2O	.405	2.108	.600	4.656
VM	VOL DRY GAS-METER COND	DCF	21.59	59.32	52.96	153.9
TM	AVG GAS METER TEMP	DEG.F	66.1	74.6	77.8	93.6
VMSTD	VOL DRY GAS-STD COND	DSCF	21.36	56.12	51.50	150.93
VW	TOTAL H2O COLLECTED	ML	3.6	3.3	1.1	0.0
VWV	VOL H2O VAPOR-STD COND	SCF	.17	.30	.05	0.00
PMOS	PERCENT MOISTURE BY VOL		.8	.1	.1	0.0
MD	MOLE FRACTION DRY GAS		.992	.995	.999	1.000
PCO2	PERCENT CO2 BY VOL, DRY		[illegible]	[illegible]	3.9	3.9
PO2	PERCENT O2 BY VOL, DRY		19.7	19.7	17.7	17.7
PCO	PERCENT CO BY VOL, DRY		0.0	0.0	0.0	0.0
PN2	PERCENT N2 BY VOL, DRY		79.5	79.5	78.4	78.4
MWD	MOLECULAR WT-DRY STK GAS		28.92	28.92	29.33	29.33
MW	MOLECULAR WT-STK GAS		28.83	28.82	29.32	29.33
CP	PITOT TUBE COEFFICIENT		.850	.850	.850	.850
DPS	AVG STK VELOCITY HEAD	IN.H2O	1.546	.712	2.342	1.215
TS	AVG STACK TEMPERATURE	DEG.F	124.7	112.1	123.5	107.0
NP	NET SAMPLING POINTS		12	12	24	24
PST	STATIC PRES OF STACK	IN.HG	-.09	-0.00	-.15	-0.00
PS	STACK PRESSURE, ABSOLUTE	IN.HG	29.27	29.35	29.33	29.48
VS	AVG STACK GAS VELOCITY	FPM	4436	2915	5463	3868
AS	STACK AREA	IN2	707	810	707	810
QS	STK FLOWRATE, DRY,STD CN	DSCFM	19166	15185	23855	20037
QA	ACTUAL STACK FLOWRATE	ACFM	21783	16790	26515	21758
PERI	PERCENT ISOKINETIC		105.7	104.9	103.3	103.3
MF	PARTICULATE WT-PARTIAL	MG	572.30	29.90	958.70	12.40
MT	PARTICULATE WT-TOTAL	MG	591.30	88.80	962.20	31.30
IC	PERC IMPINGER CATCH		3.21	66.33	2.39	[illegible]
CAN	PART. LOAD-PTL,STD CN	GR/DSCF	.41254	.00712	.28668	.00127
CAO	PART. LOAD-TTL,STD CN	GR/DSCF	.42624	.02353	.29356	.00319
CAT	PART. LOAD-PTL,STK CN	GR/ACF	.36297	.00717	.25501	.00117
CAU	PART. LOAD-TTL,STK CN	GR/ACF	.37502	.02125	.26125	.00294
CAW	PARTIC EMIS-PARTIAL	LB/HR	67.76	1.03	58.61	.22
CAX	PARTIC EMIS-TOTAL	LB/HR	70.01	3.06	60.04	.55
EA	PERCENT EXCESS AIR		1530	1530	590	590
PTF	EMISSION FACTOR PARTIAL	LB/TON FEED	16.94	0.26	14.65	0.06
PTT	EMISSION FACTOR TOTAL	LB/TON FEED	17.51	0.77	15.01	0.14

PARTICULATE EMISSION DATA

NAME	DESCRIPTION	UNITS	3-I	3-O
	DATE OF RUN		10-03-74	10-03-74
DN	PROBE TIP DIAMETER	IN	.125	.250
TT	NET TIME OF RUN	MIN	120.0	120.0
PB	BAROMETRIC PRESSURE	IN.HG	29.18	29.18
PM	AVG ORIFICE PRES DROP	IN.H2O	.624	4.179
VM	VOL DRY GAS-METER COND	DCF	51.53	146.27
TM	AVG GAS METER TEMP	DEG.F	78.3	90.1
VMSTD	VOL DRY GAS-STD COND	DSCF	49.56	138.89
VW	TOTAL H2O COLLECTED	ML	5.4	5.3
VWV	VOL H2O VAPOR-STD COND	SCF	.26	.25
PMOS	PERCENT MOISTURE BY VOL		.5	.2
MD	MOLE FRACTION DRY GAS		.995	.998
PCO2	PERCENT CO2 BY VOL, DRY		3.8	3.8
PO2	PERCENT O2 BY VOL, DRY		20.0	20.0
PCO	PERCENT CO BY VOL, DRY		0.0	0.0
PN2	PERCENT N2 BY VOL, DRY		76.2	76.2
MWD	MOLECULAR WT-DRY STK GAS		29.41	29.41
MW	MOLECULAR WT-STK GAS		29.35	29.39
CP	PITOT TUBE COEFFICIENT		.850	.850
DPS	AVG STK VELOCITY HEAD	IN.H2O	1.694	1.058
TS	AVG STACK TEMPERATURE	DEG.F	125.8	125.3
NP	NET SAMPLING POINTS		24	24
PST	STATIC PRES OF STACK	IN.HG	-0.00	-0.00
PS	STACK PRESSURE, ABSOLUTE	IN.HG	29.18	29.18
VS	AVG STACK GAS VELOCITY	FPM	4500	3642
AS	STACK AREA	IN2	707	810
QS	STK FLOWRATE, DRY,STD CN	DSCFM	19387	18061
QA	ACTUAL STACK FLOWRATE	ACFM	22086	20486
PERI	PERCENT ISOKINETIC		122.3	105.4
MF	PARTICULATE WT-PARTIAL	MG	1469.60	24.20
MT	PARTICULATE WT-TOTAL	MG	1537.00	45.30
IC	PERC IMPINGER CATCH		3.08	46.58
CAN	PART. LOAD-PTL,STD CN	GR/DSCF	.46288	.00268
CAO	PART. LOAD-TTL,STD CN	GR/DSCF	.47761	.00502
CAT	PART. LOAD-PTL,STK CN	GR/ACF	.40631	.00237
CAU	PART. LOAD-TTL,STK CN	GR/ACF	.41924	.00443
CAW	PARTIC EMIS-PARTIAL	LB/HR	76.91	.42
CAX	PARTIC EMIS-TOTAL	LB/HR	79.35	.78
EA	PERCENT EXCESS AIR		17123	17123
PTF	EMISSION FACTOR-PARTIAL	LB/TON FEED	19.23	0.11
PTT	EMISSION FACTOR-TOTAL	LB/TON FEED	19.84	0.20

PARTICULATE EMISSION DATA
(METHOD RESULTS)

NAME	DESCRIPTION	UNITS	1-I	1-O	2-I	2-O
	DATE OF RUN		10-01-74	10-01-74	10-02-74	10-02-74
DN	PROBE TIP DIAMETER	IN	.125	.250	.125	.250
TT	NET TIME OF RUN	MIN	60.0	60.0	120.0	120.0
PB	BAROMETRIC PRESSURE	IN.HG	29.36	29.36	29.48	29.48
P.4	AVG ORIFICE PRES DROP	IN.H2O	.405	2.808	.600	4.858
VM	VOL DRY GAS-METER COND	DCF	21.59	59.32	52.96	158.09
TM	AVG GAS METER TEMP	DEG.F	66.1	74.5	77.6	93.5
VMSTM	VOL DRY GAS-STD COND	NCM	.60	1.65	1.46	4.27
VW	TOTAL H2O COLLECTED	ML	3.6	6.3	1.1	0.0
VWM	VOL H2O VAPOR-STD COND	NM3	.00	.01	.00	0.00
PMOS	PERCENT MOISTURE BY VOL		[illegible]	[illegible]	.1	0.0
MD	MOLE FRACTION DRY GAS		.992	.99[illegible]	.999	1.000
PCO2	PERCENT CO2 BY VOL, DRY		.8	.8	3.9	3.9
PO2	PERCENT O2 BY VOL, DRY		19.7	19.7	17.7	17.7
PCO	PERCENT CO BY VOL, DRY		0.0	0.0	0.0	0.0
PN2	PERCENT N2 BY VOL, DRY		79.5	79.5	78.4	78.4
MWD	MOLECULAR WT-DRY STK GAS		28.92	28.92	29.33	29.33
MW	MOLECULAR WT-STK GAS		28.83	28.86	29.32	29.33
CP	PITOT TUBE COEFFICIENT		.850	.850	.850	.850
DPS	AVG STK VELOCITY HEAD	IN.H2O	1.548	.712	2.342	1.215
TSM	AVG STACK TEMPERATURE	DEG.C	51.5	44.5	50.8	41.7
NP	NET SAMPLING POINTS		12	12	24	24
PST	STATIC PRES OF STACK	IN.HG	-.09	-0.00	-.15	-0.00
PS	STACK PRESSURE, ABSOLUTE	IN.HG	29.27	29.35	29.33	29.48
VSM	AVG STACK GAS VELOCITY	M/MIN	1352.8	909.9	1665.2	1179.1
AS	STACK AREA	IN2	707	810	707	810
QSM	STK FLOWRATE, DRY,STD CN	NM3/MIN	542.7	430.0	675.5	567.4
QAM	ACTUAL STACK FLOWRATE	M3/MIN	616.6	475.4	759.3	616.1
PERI	PERCENT ISOKINETIC		105.7	104.9	103.3	103.3
MF	PARTICULATE WT-PARTIAL	MG	572.30	29.90	958.70	12.40
MT	PARTICULATE WT-TOTAL	MG	591.30	68.40	962.20	31.30
IC	PERC IMPINGER CATCH		3.21	66.33	2.39	60.35
CANM	PART. LOAD-PTL,STD CN	MG/NM3	944.04	18.13	655.97	2.90
CAOM	PART. LOAD-TTL,STD CN	MG/NM3	975.38	53.85	672.05	7.31
CATM	PART. LOAD-PTL,STK CN	MG/M3	830.60	16.40	563.54	2.67
CAUM	PART. LOAD-TTL,STK CN	MG/M3	858.17	48.70	597.85	6.73
CAWM	PARTIC EMIS-PARTIAL	KG/HR	30.736	.468	26.581	.099
CAXM	PARTIC EMIS-TOTAL	KG/HR	31.756	1.389	27.233	.249
EA	PERCENT EXCESS AIR		1530	1530	[illegible]	[illegible]
PTFM	EMISSION FACTOR PARTIAL	KG/MTON FEED	8.471	0.129	7.326	0.027
PTTM	EMISSION FACTOR TOTAL	KG/MTON FEED	8.752	0.383	7.506	0.068

PARTICULATE EMISSION DATA
(METRIC RESULTS)

NAME	DESCRIPTION	UNITS	3-I	3-O
	DATE OF RUN		10-03-74	10-03-74
DN	PROBE TIP DIAMETER	IN	.125	.250
TT	NET TIME OF RUN	MIN	120.0	120.0
PB	BAROMETRIC PRESSURE	IN.HG	29.18	29.18
PM	AVG ORIFICE PRES DROP	IN.H2O	.624	4.179
VM	VOL DRY GAS-METER COND	DCF	51.53	146.27
TM	AVG GAS METER TEMP	DEG.F	78.3	90.1
VMSTM	VOL DRY GAS-STD COND	NCM	1.40	3.93
VW	TOTAL H2O COLLECTED	ML	5.4	5.3
VWM	VOL H2O VAPOR-STD COND	NM3	.01	.01
PMOS	PERCENT MOISTURE BY VOL		.5	.2
MD	MOLE FRACTION DRY GAS		.995	.998
PCO2	PERCENT CO2 BY VOL, DRY		3.8	3.8
PO2	PERCENT O2 BY VOL, DRY		20.0	20.0
PCO	PERCENT CO BY VOL, DRY		0.0	0.0
PN2	PERCENT N2 BY VOL, DRY		76.2	76.2
MWD	MOLECULAR WT-DRY STK GAS		29.41	29.41
MW	MOLECULAR WT-STK GAS		29.35	29.39
CP	PITOT TUBE COEFFICIENT		.850	.850
DPS	AVG STK VELOCITY HEAD	IN.H2O	1.694	1.058
TSM	AVG STACK TEMPERATURE	DEG.C	52.1	51.8
NP	NET SAMPLING POINTS		24	24
PST	STATIC PRES OF STACK	IN.HG	-0.00	-0.00
PS	STACK PRESSURE, ABSOLUTE	IN.HG	29.18	29.18
VSM	AVG STACK GAS VELOCITY	M/MIN	1371.6	1110.2
AS	STACK AREA	IN2	707	810
QSM	STK FLOWRATE, DRY,STD CN	NM3/MIN	549.0	511.4
QAM	ACTUAL STACK FLOWRATE	M3/MIN	625.4	580.1
PERI	PERCENT ISOKINETIC		122.3	105.4
MF	PARTICULATE WT-PARTIAL	MG	1489.60	24.20
MT	PARTICULATE WT-TOTAL	MG	1537.00	45.30
IC	PERC IMPINGER CATCH		3.08	46.58
CANM	PART. LOAD-PTL,STD CN	MG/NM3	1059.22	6.14
CAOM	PART. LOAD-TTL,STD CN	MG/NM3	1092.93	11.49
CATM	PART. LOAD-PTL,STK CN	MG/M3	929.77	5.41
CAUM	PART. LOAD-TTL,STK CN	MG/M3	959.35	10.13
CAWM	PARTIC EMIS-PARTIAL	KG/HR	34.884	.188
CAXM	PARTIC EMIS-TOTAL	KG/HR	35.994	.353
EA	PERCENT EXCESS AIR		17123	17123
PTFM	EMISSION FACTOR-PARTIAL	KG/MTON FEED	9.613	0.052
PTTM	EMISSION FACTOR-TOTAL	KG/MTON FEED	9.919	0.097

SUMMARY OF RESULTS

NAME	DESCRIPTION	UNITS	1-I	1-O	2-I	2-O
	DATE OF RU		10-01-74	10-01-74	10-02-74	10-02-74
VMSTD	VOL DRY GAS-STD COND	DSCF	21.36	52.12	51.50	150.93
PMOS	PERCENT MOISTURE BY VOL		.8	.5	.1	0.0
TS	AVG STACK TEMPERATURE	DEG.F	124.7	112.1	123.5	107.0
QS	STK FLOWRATE, DRY,STD CN	DSCFM	19166	15185	23855	20037
QA	ACTUAL STACK FLOWRATE	ACFM	21783	16790	26815	21758
PERI	PERCENT ISOKINETIC		106.7	104.9	103.3	103.3
PARTICULATES -- PARTIAL CATCH						
MF	PARTICULATE WT-PARTIAL	MG	572.30	29.90	958.70	12.40
CAN	PART. LOAD-PTL.STD CN	GR/DSCF	.41254	.00792	.28666	.00127
CAT	PART. LOAD-PTL,STK CN	GR/ACF	.36297	.00717	.25501	.00117
CAW	PARTIC EMIS-PARTIAL	LB/HR	67.76	1.03	56.60	.22
PARTICULATES -- TOTAL CATCH						
MT	PARTICULATE WT-TOTAL	MG	591.30	88.80	982.20	31.30
CAO	PART. LOAD-TTL.STD CN	GR/DSCF	.42624	.02353	.29363	.00319
CAU	PART. LOAD-TTL,STK CN	GR/ACF	.37502	.02128	.26126	.00294
CAX	PARTIC EMIS-TOTAL	LB/HR	70.01	3.06	60.04	.55
IC	PERC IMPINGER CATCH		3.21	66.33	2.39	60.38

SUMMARY OF RESULTS

NAME	DESCRIPTION	UNITS	3-I	3-O
	DATE OF RUN		10-03-74	10-03-74
VMSTD	VOL DRY GAS-STD COND	DSCF	49.56	138.89
PMOS	PERCENT MOISTURE BY VOL		.5	.2
TS	AVG STACK TEMPERATURE	DEG.F	125.8	125.3
QS	STK FLOWRATE, DRY,STD CN	DSCFM	19387	18061
QA	ACTUAL STACK FLOWRATE	ACFM	22086	20486
PERI	PERCENT ISOKINETIC		122.3	105.4
PARTICULATES -- PARTIAL CATCH				
MF	PARTICULATE WT-PARTIAL	MG	1489.60	24.20
CAN	PART. LOAD-PTL,STD CN	GR/DSCF	.46288	.00268
CAT	PART. LOAD-PTL,STK CN	GR/ACF	.40631	.00237
CAW	PARTIC EMIS-PARTIAL	LB/HR	76.91	.42
PARTICULATES -- TOTAL CATCH				
MT	PARTICULATE WT-TOTAL	MG	1537.00	45.30
CAO	PART. LOAD-TTL,STD CN	GR/DSCF	.47761	.00502
CAU	PART. LOAD-TTL,STK CN	GR/ACF	.41924	.00443
CAX	PARTIC EMIS-TOTAL	LB/HR	79.35	.78
IC	PERC IMPINGER CATCH		3.08	46.58

SUMMARY OF RESULTS--METRIC UNITS

NAME	DESCRIPTION	UNITS	1-I	1-O	2-I	2-O
	DATE OF RU		10-01-74	10-01-74	10-02-74	10-02-74
VMSTM	VOL DRY GAS-STD COND	NCM	.605	1.646	1.458	4.274
PMOS	PERCENT MOISTURE BY VOL		.8	.5	.1	0.0
TSM	AVG STACK TEMPERATURE	DEG.C	51.5	44.5	56.8	41.7
QSM	STK FLOWRATE, DRY,STD CN	NM3/MIN	542.7	430.0	675.5	567.4
QAM	ACTUAL STACK FLOWRATE	M3/MIN	616.8	475.4	759.3	616.1
PERI	PERCENT ISOKINETIC		106.7	104.9	103.3	103.3
EA	PERCENT EXCESS AIR		1530	1530	590	590
PARTICULATES -- PARTIAL CATCH						
MF	PARTICULATE WT-PARTIAL	MG	572.30	29.90	958.70	12.40
CANM	PART. LOAD-PTL,STD CN	MG/NM3	944.04	18.13	655.97	2.90
CATM	PART. LOAD-PTL,STK CN	MG/M3	830.60	16.40	583.54	2.67
CAXM	PARTIC EMIS-PARTIAL	KG/HR	30.736	.468	26.581	.099
PARTICULATES -- TOTAL CATCH						
MT	PARTICULATE WT-TOTAL	MG	591.30	88.80	982.20	31.30
CAOM	PART. LOAD-TTL,STD CN	MG/NM3	975.38	53.85	672.05	7.31
CAUM	PART. LOAD-TTL,STK CN	MG/M3	858.17	48.70	597.85	6.73
CAXM	PARTIC EMIS-TOTAL	KG/HR	31.756	1.389	27.233	.249
IC	PERC IMPINGER CATCH		3.21	66.33	2.39	60.38

SUMMARY OF RESULTS--METRIC UNITS

NAME	DESCRIPTION	UNITS	3-I	3-O
	DATE OF RUN		10-03-74	10-03-74
VMSTM	VOL DRY GAS-STD COND	NCM	1.403	3.933
PMOS	PERCENT MOISTURE BY VOL		.5	.2
TSM	AVG STACK TEMPERATURE	DEG.C	52.1	51.8
QSM	STK FLOWRATE, DRY,STD CN	NM3/MIN	549.0	511.4
QAM	ACTUAL STACK FLOWRATE	M3/MIN	625.4	580.1
PERI	PERCENT ISOKINETIC		122.3	105.4
EA	PERCENT EXCESS AIR		17123	17123
PARTICULATES -- PARTIAL CATCH				
MF	PARTICULATE WT-PARTIAL	MG	1489.60	24.20
CANM	PART. LOAD-PTL,STD CN	MG/NM3	1059.22	6.14
CATM	PART. LOAD-PTL,STK CN	MG/M3	929.77	5.41
CAYM	PARTIC EMIS-PARTIAL	KG/HR	34.884	.188
PARTICULATES -- TOTAL CATCH				
MT	PARTICULATE WT-TOTAL	MG	1537.00	45.30
CAUM	PART. LOAD-TTL,STD CN	MG/NM3	1092.93	11.49
CAUM	PART. LOAD-TTL,STK CN	MG/M3	959.35	10.13
CAXM	PARTIC EMIS-TOTAL	KG/HR	35.994	.353
IC	PERC IMPINGER CATCH		3.08	46.58