Note: This is a reference cited in *AP 42, Compilation of Air Pollutant Emission Factors, Volume I Stationary Point and Area Sources.* AP42 is located on the EPA web site at www.epa.gov/ttn/chief/ap42/

The file name refers to the reference number, the AP42 chapter and section. The file name "ref02_c01s02.pdf" would mean the reference is from AP42 chapter 1 section 2. The reference may be from a previous version of the section and no longer cited. The primary source should always be checked.

AP-42 Section Number: 12.10

Reference Number: 2

Title: Air Pollution Aspects of the Iron Foundry Industry

APTD-0806

US EPA

February 1971

12.10, #2
(duplicate)

12.10, #2
(duplicate)

AIR POLLUTION ASPECTS OF THE IRON FOUNDRY INDUSTRY
FEBRUARY, 1971

for

Division of Air Quality and Emissions Data
Air Pollution Control Office
Environmental Protection Agency

Contract No. CPA 22-69-106

Prepared by
A. T. Kearney & Company, Inc.
Chicago, Illinois

AIR POLLUTION CONTROL OFFICE

AIR POLLUTION ASPECTS OF
THE IRON FOUNDRY INDUSTRY - FEBRUARY, 1971

TABLE OF CONTENTS

SECTION		PAGE
I	Summary	
	Introduction	I - 1
	The Emissions Problem	I - 1
	Conclusions	I - 3
II	Trends of the Iron Foundry Industry	
	Geographic Locations of Iron Foundries	II - 1
	Iron Foundry Population	II - 2
	Iron Foundry Production	II - 3
	Iron Foundry Meeting Equipment	II - 4
	Other Equipment in Iron Foundries	II - 6
	Conclusions	II - 6
III	The Iron Foundry Process	
	Gray Iron Production	III - 2
	Ductile Iron Production	III - 4
	Malleable Iron Production	III - 4
	Raw Material Storage and Furnace Charge Preparation	III - 5
	Raw Material Receiving and Storage	III - 5
	Scrap Preparation	III - 6
	Furnace Charge Preparation	III - 7

TABLE OF CONTENTS
(continued)

SECTION		PAGE
	Iron Melting	III - 7
	Cupola Furnaces	III - 8
	Electric Arc Furnace	III - 11
	Induction Furnaces	III - 12
	Reverberatory Furnace	III - 13
	Inoculation	III - 14
	Molding, Pouring and Shakeout	III - 15
	Molding	III - 15
	Pouring	III - 16
	Shakeout	III - 16
	Cleaning, Heat Treating and Finishing	III - 16
	Sand Conditioning	III - 17
	Coremaking	III - 18
	Oil Sand Cores	III - 19
	Shell Cores	III - 19
	Silicate Bonded Cores	III - 19
	Furan Cores	III - 20
	Hot Box Cores	III - 20
	Pattern Making	III - 20
IV	Emissions Generated and Their Control	
	General Character of Emissions	IV - 1
	Raw Material Storage and Charge Makeup	IV - 1

TABLE OF CONTENTS
(continued)

SECTION	PAGE
Melting Department	IV - 2
Cupola	IV - 2
Electric Arc Furnace	IV - 10
Induction Furnace	IV - 12
Reverberatory Furnace	IV - 12
Preheaters	IV - 13
Inoculation	IV - 13
Molding, Pouring and Shakeout	IV - 16
Molding	IV - 16
Pouring	IV - 17
Shakeout	IV - 19
Cleaning and Finishing	IV - 20
Sand Conditioning	IV - 21
Coremaking	IV - 22
Inventory of Foundry Emissions	IV - 24
Control of Foundry Emissions	IV - 28
Raw Material Handling, Preparation and Charge Makeup	IV - 29
Cupola Melting	IV - 30
Wet Caps	IV - 31
Dry Centrifugal Collectors	IV - 31
Wet Collectors	IV - 32
Fabric Filters	IV - 32
Electrostatic Precipitators	IV - 33
Afterburners	IV - 33
Preheaters	IV - 33

TABLE OF CONTENTS
(continued)

SECTION		PAGE
	Electric Arc Melting	IV - 34
	Fabric Filters	IV - 34
	Wet Scrubbers & Electrostatic Precipitators	IV - 35
	Furnace Hoods	IV - 35
	Fourth Hole Ventilation	IV - 36
	Snorkel	IV - 36
	Electric Induction Melting	IV - 36
	Reverberatory Furnace	IV - 37
	Inoculation	IV - 37
	Molding Pouring, Cooling and Shakeout	IV - 38
	Sand Preparation and Handling	IV - 40
	Coremaking	IV - 40
	Cleaning and Finishing	IV - 41
	Miscellaneous Areas	IV - 42
	Cost of Emission Control Systems	IV - 42
	Cupola Melting	IV - 45
	Electric Arc Melting	IV - 45
V	Recommended Practice for Testing Particulate Emissions From Iron Foundry Cupolas	
	Introduction	V - 1
	Raw Gas Test Locations	V - 2
	Cleaned Gas Locations	V - 3

TABLE OF CONTENTS
(continued)

SECTION		PAGE
	Reasons for Sampling a Cupola	V - 4
	Cupola Operating and Test Conditions	V - 6
	Obtaining Meaningful Test Data	V - 8
	Sampling Procedures and Equipment	V - 10
	Section I - Sampling Raw Particulate Emissions in the Cupola Stack	V - 16
	Recommended Test Method and Procedures	V - 16
	Section II - Raw Gas Test Location in Duct Ahead of Collector	V - 25
	Section III - Sampling Cleaned Cupola Gases	V - 26
	General	V - 26
VI	Glossary of Terms	
	Appendix	
	A - Sampling and Analytical Techniques	
	B - Interview Guide for In-Plant Engineering Survey	
	References	

LIST OF EXHIBITS

NUMBER	TITLE
II-1	Distribution of Iron Foundries
II-2	Geographical Distribution of Iron Foundries
II-3	Population Trends in the Foundry Industry
II-4	Iron Foundry Production Trends
II-5	Iron Foundry Cupola Trends
II-6	Iron Foundry Electric Furnace Trends
III-1	Iron Foundry Process Flow
III-2	Process Flow Diagram - Gray, Ductile and Malleable Iron
III-3	Summary of Gray Iron Specifications
III-4	Summary of Ductile Iron Specifications
III-5	Summary of Malleable Iron Specifications
III-6	Process Flow Diagram - Raw Material and Furnace Charge Makeup
III-7	Process Flow Diagram - Melting Department
III-8	Illustration of Conventional Lined Cupola
III-9	Illustration of Water-Cooled Cupola
III-10	Approximate Melting Rates and Gas Volumes for Lined Cupolas
III-11	Approximate Melting Rates and Gas Volumes for Unlined Cupolas
III-12	Illustration of Cupola Reaction Area
III-13	Typical Cupola Material Balance
III-14	Illustration of Electric Arc Furnace
III-15	Electric Arc Furnace - Heat and Material Balance

LIST OF EXHIBITS
(continued)

NUMBER	TITLE
III-16	Illustration of Channel Induction Furnace
III-17	Illustration of Coreless Induction Furnace
III-18	Coreless Induction Furnace - Heat and Material Balance
III-19	Illustration of Reverberatory Furnace
III-20	Illustration of Magnesium Treatment Methods for Producing Ductile Iron
III-21	Process Flow Diagram - Molding, Pouring and Shakeout
III-22	Process Flow Diagram - Cleaning and Finishing
III-23	Process Flow Diagram - Sand Conditioning
III-24	Process Flow Diagram - Core Making
IV-1	Characteristics and Sources of Emissions in Various Foundry Departments
IV-2	Chemical Composition of Cupola Particulate Emissions
IV-3	Particle Size Distribution - Cupola Emissions
IV-4	Particulate Emissions versus Specific Blast Rate for Acid Lined Cupolas
IV-5	Effect of Specific Blast Rate and Coke Rate on Particulate Emissions from Unlined Cupolas
IV-6	Results of Size Distribution and Chemical Analysis for Three Electric Arc Installations
IV-7	Emissions Data from Electric Arc Melting Furnaces
IV-8	Relationship between Rate of Emissions and Heat Cycle for Electric Arc Melting
IV-9	Treatment Agents for Producing Ductile Iron
IV-10	Molding Sand Gas Analyses
IV-11	Molding Sand Gas Evolution and Hot Permeability

LIST OF EXHIBITS
(continued)

NUMBER	TITLE
IV-12	Gas Volume Evolved as a Function of Volatiles Contained in Molding Sand
IV-13	Effect of Baking Time on Gas Generated for Various Baking Temperatures
IV-14	Effect of Sand to Oil Ratio on Amount of Core Gas Generated during Pouring
IV-15	Inventory of Iron Foundry Emissions from Melting Operations, 1969
IV-16	Inventory of Iron Foundry Emissions from Non-Melting Operations, 1969
IV-17	Application of Emission Control Equipment Systems to Foundry Processes
IV-18	Summary Statistics - Air Pollution Control Equipment on Gray Iron Foundry Melting Furnaces
IV-19	Collection Efficiency of Emission Control Equipment Systems

ACKNOWLEDGEMENTS

A. T. Kearney & Company, Inc. gratefully acknowledges the many people and organizations who cooperated and assisted in this study.

We acknowledge the cooperation and assistance provided by the American Foundrymen's Society and the Gray and Ductile Iron Founders' Society in furnishing information.

We acknowledge the staff of APCO for their assistance and guidance.

This report was prepared by a project team of A. T. Kearney staff. The overall direction was under Mr. E. Stuart Files, Vice President of A. T. Kearney & Company, Inc. The Project Director was Mr. Joseph H. Greenberg, Principal, and the other members of the team were Mr. Robert E. Conover, Senior Associate and Mr. Bernard Gutow, Associate.

AIR POLLUTION CONTROL OFFICE

AIR POLLUTION ASPECTS OF THE IRON FOUNDRY INDUSTRY FEBRUARY, 1971

I - SUMMARY

INTRODUCTION

The Air Pollution Control Office has the task of developing technology for a national program for control of air pollution and, as a part of this program, is conducting a series of systems analysis studies of various industries which are primary sources of air pollution. These studies are being conducted by the Division of Process Control Engineering. This study is directed at the iron foundry industry, with particular emphasis on the melting area.

For the purposes of this study, the iron foundry industry is defined as those shops that melt iron (including iron and steel scrap) in furnaces, pour the molten iron into molds, and alloy and/or treat the iron in either the molten or cast state with processes limited to making gray, malleable and nodular or ductile cast iron. This definition excludes blast furnace processes, processes for converting iron to steel, and processes wherein molten iron is not cast in molds, such as metal abrasive shot.

THE EMISSIONS PROBLEM

The last 20-25 years have seen significant advances in the technology of making iron castings. The use of cupolas

as the main melting source is decreasing and being replaced with the advanced technology of melting with electric arc and induction furnaces. In addition to increasing the production capacities of the foundries, the electric furnaces have made it possible for the foundries to use charge materials such as iron borings and steel turnings, sheet steel, etc., which were previously considered impractical for use as cupola charge without extensive preparation. The availability and lower cost of such materials, better control of the metallurgical process involved in making molten iron, and freedom from the use of coke as a fuel have made electric furnaces very popular with some foundries. In spite of all these advancements, the cupola has remained the main melting unit in the iron foundry industry and continuing efforts are being made to improve its performance and that of the charge material. Improvements in foundry melting technology have not resulted in full elimination of the pollutants emitting from the foundries into the atmosphere.

The pollutants discharged by the iron foundry industry are:

1. Emissions from melting furnace operations, such as smoke, metallic oxides, oil vapors and carbon monoxide.

2. Emissions from other dust-producing operations within the plant, such as sand fines, metal dust and coke dust.

3. Odors and gaseous compounds such as fluoride fumes, vapors and facing fumes from both sources. The physical difficulties of satisfactory collection of pollutants are not easily solved and, in most cases, costs of satisfactory collection are

quite high. Gases from foundry furnaces are hot and must be cooled before collection. If recirculated water is used for cooling and dust collection, corrosion problems may be introduced. Cost of fresh water is often prohibitive requiring recirculation in most cases. Most metallic oxides from melting operations are extremely small in size, to about 0.7 microns, and require very efficient equipment for collection.

Particulate emissions have been a point of focus for concentrated efforts in the control of air pollution. However, gaseous emissions and odors from the foundries have not been given much attention, and the foundry industry now has to take steps to suppress these discharges into the atmosphere. Many of the odors in the foundries result from coremaking and shell molding operations, but the common gaseous emissions also include vapors from melting oily metal scrap, painting operations, inoculation of metal, and from metal pouring into molds.

CONCLUSIONS

The lack of correlation between standard furnace design factors and emissions levels requires that the explanation for the wide variance in type and quantity of emissions lie with cupola operating factors. This is borne out of the fact that all variables proven to affect emissions levels, or indicating a probability of affecting emissions levels, relate more to the operation of the cupola than to its design. These operating factors can be easily divided into two quite distinct groupings with some cross effects from one group to the other.

The first group consists of variables related directly to cupola operation, including specific blast rate, blast temperature, type of lining, and operating variables of the afterburner. The afterburner itself is an emission control device but adjustment of gas and combustion air is considered here as a variable for the melting system. These variables are relatively inflexible and are determined by required, or desired, operating characteristics.

The second group of variables concerns the quantity and quality of charge materials. These include metal to coke ratio, use of oxygen or natural gas, and the use of briquettes which often contain oil or cementitious materials. Also, contaminants or alloying materials may occur in the metallic charge. These factors are highly variable, often changing from charge to charge. This second group is more controllable, but at some cost.

Insufficient data prohibit the quantitative evaluation of the total effect of all variables in the first group compared to all variables in the second group. The data suggest, however, that the type and quantity of cupola emissions are affected more by the quantity and quality of charge materials. Certainly little or no limestone dust, coke particles, or oil vapor and other combustibles will appear as emissions unless these materials are charged into the cupola. Similar statements can be made for zinc, lead, aluminum, chromium, cadmium, copper, silicon and other oxides, particularly when their formation is abetted by the injection of oxygen, or high blast rates.

Certain relationships expected to be identified were not discovered. Blast air temperature, with a demonstrable effect on coke rate, must by extension show a secondary effect on the emissions level. The use of afterburners in the cupola stack has been shown to aid in the incineration of combustibles. Incorporation of these devices would no doubt noticeably lower the emission levels. The fact that these relationships are not identified might be attributed to two factors possibly affecting all the analyses: the quantity and quality of the test data.

Stack testing is not an exact science at this time and no single technique has been accepted by the industry. Methods and equipment used to obtain the data are discussed later. Reproducibility of results is difficult with any given technique by a single testing firm, even for a stable emissions producing system. With relatively unstable conditions as exist in cupola furnaces and the generally poor working conditions existing at the top of cupola stacks, variation in results would be expected. When this situation is further compounded by the use of different techniques, equipment, and testing companies to obtain data for comparison and analysis, the confidence level of the data must suffer, despite the high degree of professionalism of the laboratories performing the tests. As a result of this condition, all data used in this analysis have undergone critical evaluation before acceptance.

II - TRENDS OF THE IRON FOUNDRY INDUSTRY

The iron foundry industry in the United States is in the peculiar position of having its output increase in recent years both on a tonnage and a dollar basis, while at the same time there has been a decrease in the number of active installations. These foundries are located in 48 states, although 80% are located in only 13 states. In fact, 1,116 or 62% are located in 25 major metropolitan areas of United States cities. Of all iron foundries, only about 525, or 29%, can be classified as medium and large foundries, employing more than 100 people, and only 91 can be called very large, employing over 500 people. Thus, by far the majority of foundries are small installations, many being located in small communities.

GEOGRAPHIC LOCATIONS OF IRON FOUNDRIES

The distribution of iron foundries by states and by major metropolitan areas is shown in Exhibit II-1. The highest concentration is in the states which border on the Great Lakes, namely, Pennsylvania, Ohio, Michigan, Illinois, Wisconsin, New York and Indiana. This group of seven states contains almost half of all of the iron foundries in the United States and more than half of the iron castings capacity. The State of California contains the greatest concentration of iron foundries in the western half of the country, with one-third of the iron foundries in that 17-state area being in California. Other areas of high iron foundry concentration are in the

southeastern states and in the northern states bordering on the west bank of the Mississippi River.

The variations which have occurred in the distribution of iron foundries by states during the period of 1963-1969 are given in Exhibit II-2.

IRON FOUNDRY POPULATION

The population trends in the foundry industry have been developed in Exhibit II-3.

The total number of foundries of all types has remained relatively constant during the postwar period, ranging from 5,000 to 5,800 and averaging approximately 5,400. However, the iron foundry population has shown a steady decline, from 3,200 in 1947 to 1,670 in 1969. If this decline is continued, the number of foundries is projected to be approximately 1,000 by 1980. However, the average size of iron foundries has been increasing steadily, with average annual production per foundry going from 3,800 tons in 1947 to 5,300 tons in 1959 and to 8,700 tons in 1969. By 1980, the average production per iron foundry is projected to be approximately 16,500 tons per year.

An analysis of the population of iron foundries with respect to size of foundry has shown that almost the entire decline in foundry population has been among the small foundries, with employment of under 100 per foundry. The number of medium

sized foundries has remained almost constant, while the number of large foundries has increased slightly. The number of small foundries has declined by one-third from 1959 to 1969 and is expected to further decline to only about half of the 1969 population by 1980.

IRON FOUNDRY PRODUCTION

Annual castings production in the United States has varied widely, depending on the economy, with the ranges during the postwar period as follows:

Iron Foundry Production [1, 2]

Type of Metal	Production Tons per Year: Minimum	Maximum	Last 5-Year Average
All Metals	13,200,000	20,800,000	20,000,000
All Reported Cast Iron	11,032,000	17,084,000	16,329,000
Cast Iron from Iron Foundries	10,000,000	14,486,000	13,817,000
Gray Iron	9,340,000	11,936,000	11,650,000
Malleable Iron	661,000	1,227,000	1,075,000
Nodular Iron	-	1,570,000	1,092,000

The complete castings production picture has been shown graphically in Exhibit II-4. The data, as reported by the Department of Commerce, included the production of ingot molds. However, only about 30% of ingot molds are produced from gray iron melted in cupolas, with the rest being produced from direct blast furnace metal. Since castings production from

direct metal was excluded from this study by definition, and additionally has already been covered by the iron and steel industry study, the estimated portion of ingot mold production from this source was deducted from total iron castings production.

IRON FOUNDRY
MELTING EQUIPMENT

The cupola is still the most common method of melting iron with about 1,930 cupolas in 1969 for a combined capacity of 18,570 TPH. This is a decline of about 900 cupolas in the past ten years. This decline can be expected to continue, although at a decreasing rate, as more foundries are abandoned, and others convert from cupola to electric melting. The trend toward decline in the number of cupolas is expected to continue for the foreseeable future, with the projected number being reduced to approximately 1,000 by 1980. The use of the cupola from the postwar period is depicted in Exhibit II-5.

The trend toward electric melting in iron foundries has been accelerating rapidly, as shown in Exhibit II-6. Although some scattered electric melting installations existed in iron foundries prior to the mid-1950's, the great majority of the installations were made during the period of 1960-1970. The most recent census of foundries, taken in 1969, has revealed that there were some 374 electric arc furnaces installed in 176 iron foundries in the United States.

Since many foundries which produce both iron and steel castings use the same melting furnace for both purposes, the actual number of arc furnaces used for iron melting has been estimated to be approximately 200, located in some 100 foundries.

The number of arc furnace installations for iron melting has been increasing at a rate of about 15 furnaces per year. If this rate were to continue, the number of such furnaces could be expected to reach approximately 350 by 1980.

For the most part, the electric arc furnace installations have been for the replacement of cupolas in existing foundries, although there have been several new foundries built in recent years in which arc furnaces were installed. The number of arc furnaces melting iron will, therefore, be higher than the straight line projection, possibly in the range of 400 to 450 furnaces by 1980.

In 1969, there also were 495 coreless induction furnaces installed in 191 iron foundries. Approximately half of these furnaces were in foundries which also produced steel castings. Since many of these iron and steel foundries use the same furnaces for melting both metals, the actual number of these coreless induction furnaces which are used for melting iron is estimated to be approximately 300, located in some 125 foundries. The number of coreless induction furnace installations has been increasing at a rate of approximately 50 per year. This trend

will probably accelerate, resulting in an estimated 700-800 furnaces in iron foundries by 1980.

OTHER EQUIPMENT IN IRON FOUNDRIES

All foundries employ some kind of molding practice with almost all iron foundries using sand molding. The trend is toward modern mechanized or semiautomated molding, some of which employ conveyors for moving molds past each of the molding stations. This can be expected to increase as more foundries automate or mechanize their operations.

Coremaking is another area that is undergoing rapid changes, with the trend being away from oil-bonded, baked sand cores, toward chemically bonded, thermally cured or airset cores.

CONCLUSIONS

These figures and trends are of importance at this time, in that they tend to emphasize certain factors having a direct bearing on this study. These factors can be summarized as follows:

1. The number of iron foundries is still declining, but at a lesser rate. However, there were about 1,670 installations in 1969.

2. The number of cupola installations is still declining, but also at a lesser rate. The majority of iron foundries, however, still use cupolas for melting and will no doubt continue to do so for many years.

3. Only 5% of the total number of iron foundries can be classified as large foundries. However, 62% of all iron foundries, including most of the larger ones, are located in 25 large metropolitan areas.

III - THE IRON FOUNDRY PROCESS

The iron foundry consists of a number of distinct but strongly interconnected operations. In a large production foundry, each of the operations can be highly mechanized, or even automated, while the smaller foundries still may retain many manual techniques.

All foundries utilize certain basic operations consisting of:

1. Raw material storage and handling.
2. Melting.
3. Pouring into molds.

Other processes present in most, but not all, foundries include:

1. Molding.
2. Sand preparation and handling.
3. Mold cooling and shakeout.
4. Casting cleaning, heat treating, and finishing.
5. Coremaking.
6. Pattern making.

A simplified, schematic flow diagram encompassing most of these processes is presented in Exhibit III-1.

Each operation contains equipment and processes capable of producing emissions which may include gas, fume, smoke and particulate matter. The latter can range from metal dust from

grinding operations, that is relatively easy and inexpensive to collect, to extremely fine ferrous and nonferrous oxides from melting furnaces, that are very expensive to collect. The sources of these emissions are schematically indicated in Exhibit III-1, and the operations are described in the following paragraphs.

GRAY IRON PRODUCTION

Exhibit III-2, Process Flow Diagram for Gray Ductile and Malleable Iron, outlines the most common flow pattern in the iron foundry industry. The flow begins with the raw material storage area including the scrapyard and stores facilities for scrap, pig iron, alloys, sand, binders, and other raw materials. The furnace charge is made up in, or adjacent to, the scrapyard and consists of the metallics, flux materials, and, in the case of cupola melting, coke for fuel.

Melting furnaces for iron include the following principal types:

1. Cupolas
2. Electric Arc
3. Electric Induction
4. Reverberatory.

The charge material is transferred to the melting furnace, and the resultant molten iron is tapped into a temporary holding unit or into a ladle for pouring into completed molds.

The holding unit may be a large ladle or forehearth to accommodate the constant flow of metal from a continuous-tap cupola or it may be a gas fired or electric powered furnace also used to increase the temperature of the iron. Holding furnaces are also utilized with electric melters for accumulation of hot metal, superheating, and analysis adjustment.

Molten metal from the forehearth or holding furnace is transferred to a pouring ladle, from which molds are filled, or to a large "bull" ladle used for filling a number of smaller pouring ladles. In some production foundries, metal is transferred from the furnace by ladle to a channel induction holding furnace adjacent to the pouring zone of a molding line where the molds are filled from smaller pouring ladles or from an automated pouring machine. The holding furnace is capable of restoring heat lost during the transfer and providing superheating where desired. Chemical additions to the molten iron while in the ladle normally include desulphurizing agents, usually some form of sodium carbonate.

The molding area is supplied with molding sand mixed with the required additives to permit the production of satisfactory molds of green sand, dry sand, dry baked sand, shell or hot box sand, or other molding material. After the mold has been completed and closed, it is filled with hot metal, cooled sufficiently to insure solidification, and moved to the shakeout area where the sand and casting are separated by manual or mechanical means.

In green sand molding, the used sand from the shakeout, plus spill and overflow sand, is returned to the sand preparation system for reconditioning and reuse. Used sand from other molding processes is either disposed of or transferred to a thermal wet or dry sand reclamation system.

After being separated from the molding sand in the shakeout, the castings commonly are cooled, sorted, trimmed, and then cleaned by shotblasting. Processing after cleaning includes chipping and grinding. Heat treatment may be specified for certain types of castings before machining. Surface coating applications such as paint or ceramic coatings are normally the final operation.

DUCTILE IRON PRODUCTION

The manufacture of ductile iron castings is essentially the same as the production of gray iron except for magnesium treatment and minor analysis modifications, and for the more extensive heat treatment which is sometimes required. The inoculants that produce the desired graphitic nodularization are commonly added to the molten metal in the ladle at a special station. The resultant smoke and fume emissions, as well as the momentary pyrotechnics, generally require a ventilated and partially shielded station to protect foundry personnel.

MALLEABLE IRON PRODUCTION

Malleable iron process flow is also similar to gray iron flow with the exception of an annealing operation required to

convert the as cast "white" iron into malleable iron, and the press straightening sometimes required to correct the warping that results from the annealing process. In other regards the process flow for malleable iron is the same.

Specifications for various classes of gray, ductile, and malleable iron are tabulated in Exhibits III-3, III-4 and III-5.

RAW MATERIAL STORAGE & FURNACE CHARGE PREPARATION

Raw Material Receiving and Storage

The raw materials used for iron production fall into the following classifications:

1. Metallics
   - (a) Pig Iron
   - (b) Iron and steel scrap
   - (c) Turnings and borings (loose or briquettes)
   - (d) Ferroalloys
   - (e) Foundry returns
2. Fluxes
   - (a) Carbonate type (limestone, dolomite, soda ash)
   - (b) Fluoride type (fluorspar)
   - (c) Carbide type (calcium carbide)
3. Fuels-Coke (for cupolas)
4. Refractories

These materials, except for foundry returns, are received by railcar or truck, usually unloaded by crane and stored in the foundry scrapyard. Exhibit III-6 Process Flow Diagram for

Raw Material Storage and Furnace Charge Makeup, outlines the common flow patterns in the iron foundry industry.

Although open stockyards are still common, the use of covered storage areas is becoming more widespread as a means of protection from weather, keeping materials dry, and assisting in containing and eliminating dust and smoke which may be generated.

Scrap Preparation

Scrap materials, including foundry returns, are usually used in the as-received form. Where scrap preparation is required, the operations may involve any combination of the following:

1. Cutting to size by flame torch, shear or by breaking.
2. Cleaning by degreasing, steam or by shotblasting.
3. Burning of surface coatings or oils in a confined chamber or in the open air.
4. Drying or preheating.

With the exception of the cutting operations, scrap preparation is not widely performed for cupola melting, or for top charged electric arc furnaces. For electric induction furnaces and side charged arc furnaces, a greater degree of preparation is necessary to obtain dry scrap of the proper size.

Furnace Charge Preparation

The methods of makeup and handling of melting furnace charges vary widely from completely manual systems where all materials are hand shoveled or carried, to highly mechanized systems where one man can control the handling, weighing, and loading of all raw materials. Charge makeup for the cupola is more complex than for electric furnaces, because of the necessity of using coke and large quantities of flux.

Charges are normally loaded directly into the furnace charging bucket, skip, or similar container. The prescribed combination of metallics, flux and coke (for cupolas) is weighed either before loading or while loading.

IRON MELTING

Four types of melting furnaces represent over 98% of the installed melting systems. The following table, from a 1968 United States Department of Commerce[1] study, shows the distribution of melting furnaces in the iron foundry industry.

Iron Foundry Melting Furnaces - 1968

Furnace Type	Number Installed	Percent of Total
Cupola	1,232	89.5%
Electric Induction	73	5.3
Electric Arc	42	3.1
Other Types	29	2.1
Total	1,376	100.0%

The furnace census does not show the number of reverberatory furnaces in use, but it would be expected that they constitute the majority of the 2.1% indicated as "Other Types." Despite the low incidence of use, this method of melting is of interest because of its reported low emission of particulate matter, and its increasing use in small foundries.

The reverberatory furnace is heated by coal, natural gas or oil, while the induction and arc furnaces obtain their heat from an electric induction coil or an electric arc. In the cupola, coke is a portion of the furnace charge and the heat required to melt the iron is derived from the combustion of the coke in contact with the metallic and fluxing charge materials.

Exhibit III-7, Process Flow Diagram Melting Department, illustrates the most common flow pattern.

Cupola Furnaces

The cupola is a vertical furnace with a normally circular cross section which is charged alternately with metal, coke, and a fluxing material, to produce molten iron of a specified analysis and temperature. Many fundamental cupola designs have evolved through the years, two of which are widely in use at this time--the conventional refractory lined cupola and the more recent development, the unlined, water-cooled cupola.

For all cupola design, the shell is made of rolled steel plate. In the conventional design, an inside lining of refractory material is provided to insulate the shell. The unlined, water-cooled cupola utilizes a steady flow of cooling water on the outside of the unlined shell from below the charging door to the tuyeres, and an inside lining of carbon block below the tuyeres to the sand bed, to protect the shell from the interior temperature. Conventional lining is used at the charging door level and in the upper stack.

Illustrations of lined and water-cooled cupolas are shown in Exhibits III-8 and III-9. Exhibits III-10 and III-11 present approximate melt rates and gas volumes for lined and unlined cupolas.

The cupola bottom consists of two semicircular, hinged steel doors, supported in the closed position by props during operation, but able to be opened at the end of a melting cycle to dump the remaining charge materials. To prepare for melting, a sand bed 60 to 10 inches deep is rammed in place on the closed doors to seal the bottom of the cupola. At the beginning of the melting cycle, coke is placed on the rammed sand bottom and ignited, preferably with a gas torch or electric starter. Additional coke is added to a height of four or five feet above the tuyeres after which regular layered charges of metal, limestone and coke are placed on the coke bed up to the normal operating height.

The air blast is turned on and the melting process begins. As the coke is consumed and the metal charge is melted, the

furnace contents move downward in the cupola and are replaced by additional charges entering the cupola through the charging door.

Combustion air is blown into the wind box, an annular duct surrounding the shell near the lower end, from which it is piped to tuyeres or nozzles projecting through the shell about three feet above the top of the rammed sand.

Blast air entering the cupola through the tuyeres contains 21% oxygen which combines quickly with the carbon in the coke as follows:

$$C + O_2 \rightarrow CO_2 + 175{,}900 \text{ BTU/pound mole}$$

The oxidizing zone in which this reaction occurs is designated the combustion zone. It is the zone of highest temperature and extends from the tuyeres to a level where the following reaction occurs:

$$C + CO_2 \rightarrow 2\ CO - 69{,}700 \text{ BTU/pound mole}$$

The reduction of CO_2 to CO starts before all oxygen in the blast air is consumed. The maximum CO_2 concentration is believed to be approximately 14%-18% at the boundary of the oxidation and reduction zones at a maximum temperature of $2{,}800^{\circ}$-$3{,}400^{\circ}$ F. Both reactions noted are reversible and proceed in both directions depending upon conditions at different levels. The reactions almost cease in the preheat zone as energy is used to preheat the charge materials and the gas temperature is lowered to the reaction temperature below which further reduction of carbon dioxide to carbon

monoxide will not occur.[2] A pictorial description of a cupola reaction area is shown in Exhibit III-12.

The tap hole through which the molten iron flows to the spout is located at the level of the rammed sand bed. For continuous tap operation, the slag also is discharged through the tap hole and separated from the iron by a skimmer in the spout. For intermittent tapping, molten iron collects in the well with the slag floating on its surface, and a slag hole is located at the level representing the height of the maximum amount of iron desired to collect in the well. An opening is provided in the cupola shell 15-25 feet or more above the bottom plate for charging the cupola. The charging door opening varies in size according to the intended method of charging and the diameter of the cupola. The upper stack is extended sufficiently to pass through the building roof and provide the required natural draft. A spark arrestor is fitted to the top to reduce the hazard of fire.

Exhibit III-13 shows examples of typical material balances for lined and water-cooled cupolas.

Electric Arc Furnace

The direct arc electric furnace consists of a refractory lined, cup shaped, steel shell with a refractory lined roof through which three graphite electrodes are inserted. The shell is arranged for tilting to discharge the molten charge. Charging of the metal to be melted is accomplished by chuting through a door opening in the side of the shell for fixed roof

furnaces, or by raising the roof and swinging it aside to permit the use of a bottom dump charge bucket for removable roof furnaces. Exhibit III-14 is an illustration of an electric arc furnace.

Foundry furnace sizes usually range in diameter from about 3'0" up to 12'0" with holding capacities of 500 pounds to 25 tons, and melting rates from 250 pounds to 12 tons per hour. In recent years, furnaces as large as 17'0" in diameter, holding 65 tons and with melting rates of over 20 tons per hour have been installed in production foundries.

Exhibit III-15 is a typical heat and material balance for an electric arc furnace.

Induction Furnaces

The induction furnace is a cup or drum-shaped vessel that converts electrical energy into heat to melt the charge. Unlike the electric arc furnace, no electrodes are required. Heat is produced by utilizing the transformer principle in which a magnetic field is set up when the primary coil of the transformer is energized. The magnetic field at a high flux density induces eddy currents in the charge which are converted to heat by the electrical resistance of the charge itself.

Heat develops mainly in the outer rim of the metal in the charge and then carries to the center by conduction until the metal is molten. The electrical energy is converted into heat by induction in two ways. In the channel induction furnace,

the metal charge surrounds the transformer core, thereby forming a loop or channel. In the coreless induction furnace, the metal heated is both the core and the secondary coil. Furnace coils are water cooled to prevent heat damage.

Exhibits III-16 and III-17 are illustrations of channel and coreless induction furnaces.

The induction furnace lends itself to either continuous or batch-type operations and is used as a melting furnace or for holding or duplexing operations. Generally, the coreless furnace is better adapted to melting and superheating, whereas the channel furnace is better suited to superheating, holding, and duplexing, although it is also used for melting.

Induction furnaces are supported on a pedestal-type structure. A common arrangement contains pivot bearings for tilting the furnace for tapping. The entire furnace must rotate through about 100° to empty the vessel.

The furnace top of a coreless furnace is normally level with the charging platform and the operating functions of charging and slagging are carried out on the platform.

Exhibit III-18 is a typical heat and material balance for a coreless induction furnace.

Reverberatory Furnace

The reverberatory type of fuel fired furnace is found in two types of applications in the iron foundry. The large, stationary reverberatory or air furnace is associated with

malleable iron foundries, where it has long been used as a duplexing unit in conjunction with a cupola. These furnaces are generally powdered coal fired, although oil and gas are also used. They are not melters, but are used to receive molten iron from the cupola, and to refine and superheat it for pouring. These furnaces are long, rectangular units with arched or suspended roofs, generally fired from one end, and with waste gases exhausting into a stack from the opposite end. Temperatures of 2,900° F and higher are reached in these furnaces. Holding capacities range up to 40 tons.[3, 4]

The second type of reverberatory fuel fired furnace is used for melting. It is generally small in size, up to two tons capacity, and tilts for pouring. Furnaces of this type are found in small foundries, where economical installations and low emission melting are desired.

Exhibit III-19 is an illustration of a reverberatory furnace.

Inoculation

Inoculation is a process used in the production of ductile iron or to improve the mechanical properties of castings.

In ductile iron production, inoculation serves to precipitate carbon in the iron in the form of disconnected spheroids. A matrix of low carbon ferrite forms which is required to make ductile iron of satisfactory quality. Because of economics and availability, magnesium is usually used for inoculation.

Pure magnesium can be applied, but a more common practice involves using nickel, copper or silicon with magnesium in alloy form. Magnesium impregnated coke is also popular. When the magnesium compound is added to the molten iron, the reaction is more or less violent depending upon the form of the magnesium.

Exhibit III-20 illustrates several methods of magnesium treatment.

MOLDING, POURING AND SHAKEOUT

Molding

Many molding materials and types of equipment suitable for the production of iron castings have been developed and are widely used today. Molding techniques found in current practice include green sand, dry sand, shell or hot box molding, full mold and the Rheinstahl process. Green sand molds are usually least costly of all molds to produce.

In general, molding sand is prepared by adding organic or inorganic binders and water to clean silica sand and mulling the material in a manner to insure that all sand grains are coated with the binder mixture. The prepared sand is then discharged from the mixer, or muller, and transferred to the molding area. In mechanized foundries, the transfer is usually effected by mechanical or pneumatic conveyor. Smaller foundries often use front end loaders, tote boxes, or wheelbarrows.

The typical molding operation is done with the aid of molding machines. The complete operation is often performed in two separate machines. Molding machines capable of molding cope and drag simultaneously in one molding cycle are often utilized.

Pouring

Pouring is generally done within a short time after the molds have been prepared to prevent drying of green molding sand. The molten metal is temporarily stored either in large refractory lined holding ladles, or in furnaces designed to maintain the tapping temperature, or to superheat the metal, from which it is tapped off as needed.

Shakeout

The hot casting is commonly separated from the sand on a heavy-duty vibrating screen. The sand flows through the screen openings to the return or shakeout sand system for transfer to the return sand bin of the sand conditioning system. The castings are removed from the shakeout manually, by hoist, or action of the vibrating screen to a cooling and sorting conveyor or to tote boxes.

Many foundries separate the casting from the sand manually, particularly those foundries which are not highly mechanized.

Exhibit III-21 illustrates a common process flow diagram for molding, pouring, and shakeout.

CLEANING, HEAT TREATING AND FINISHING

Cleaning and finishing of castings are the final operations performed in the foundry. Cleaning generally refers to the operations involved in the removal of sand and scale; sprues, gates, and risers; and fins, wires, chaplets or other metal not a part of the casting. The castings, after they have been separated from sand at the shakeout screen, are cooled in boxes

or on a conveyor which moves them to the cleaning and finishing area. For gray iron castings, the gating system may be broken off by impact in the shakeout, or may be removed on a sprue removal section of the casting delivery conveyor.

Exhibit III-22 is a typical process flow diagram for cleaning and finishing.

Heat treatment of iron castings is performed for the following basic reasons:

1. For Gray and Ductile Iron

   Stress Relief - 1000° - 1250° F
   Annealing - 1250° - 1650° F
   Normalizing - 1650° F
   Quench and Temper - 1550° - 1600° F

2. For Malleable Iron

   Annealing - 1600° F

Generally, these treatments are carried out in batch-type or continuous heat treating furnaces which may be gas or oil fired, or electrically heated. Atmosphere control is sometimes used for the higher temperature treatments.

SAND CONDITIONING

Most of the sand used in the foundry molding operation is reused many times with the addition of binders and moisture for each use. The cost of new sand, its handling and storage space requirements, and additional cost for disposal of used sand make single usage of new sand impractical. Therefore, most foundries have effectively used sand collection and reconditioning systems.

In general, sand conditioning systems consist of the following:

1. Raw material receiving and storage
2. Sand mixing system
3. Prepared sand delivery system
4. Spill sand recovery system

Exhibit III-23 illustrates the sand conditioning process flow.

Reclamation equipment designed to remove the accumulated buildup of clay and carbonaceous material on the sand grains to extend the working life of molding sand is available. The use of such equipment often becomes a desirable economic alternative to the purchase of new replacement sand. Sand is often reclaimed by high production foundries with large molding sand requirements and by foundries located in areas where suitable molding sand is relatively expensive.

COREMAKING

Cores are normally made of silica sand, organic or inorganic binders, and a liquid to activate the binding material. The selection of the core formulation and process best suited to a particular application requires consideration of many factors including green strength, dry strength, porosity, core complexity, quantity of cores required, and raw material, equipment and production costs. The process flow diagram for coremaking is illustrated in Exhibit III-24.

The major coremaking processes in current use for castings are:

- Oil Sand Cores
- Shell Cores
- Silicate Bonded Cores
- Furan Cores
- Hot Box Cores

Oil Sand Cores

Oil sand cores are widely used although silicate and resin bonded cores are being used in greater numbers each year. Vegetable or mineral oils are commonly used as binders. Cereal binders and clay are often used in conjunction with core oils. The cereal binders, mostly derived from corn flour, are added to improve green and dry bond, decrease the oil required, and improve collapsibility of the core. Clay is often added in small amounts to increase the green strength.

Shell Cores

Shell cores for iron castings make use of round, clean silica sand. The resin normally employed for iron castings is phenolformaldehyde. Hollow shell cores are made by the investment process in a shell core machine, and small, solid cores can be made in a hot box machine.

Silicate Bonded Cores

Silicate bonded cores are made in a molding or core blowing machine, and set by the application of carbon dioxide in a

manner that permits the gas to completely permeate the core. Since the storage life of silicate bonded sand is short when exposed to the air, due to absorption of CO_2, the mixed sand must be stored in covered containers.

Furan Cores

Furan air set cores employ resins made from furfuryl alcohol, ureas, and formaldehydes. The resins are mixed with core sand and phosphoric acid activator in conventional mixing equipment. Binders are usually converted from liquid to solid at room temperature.

Hot Box Cores

Hot box core resins include furfuryl alcohol, urea-formaldehyde and phenol urea-formaldehyde. The liquid resin is mixed with the core sand and activated in conventional mixing equipment. Binders are converted from liquid to solid by heat supplied by ovens, infrared lamps, dielectric ovens or heated core boxes.

PATTERN MAKING

Foundry patterns are normally made of wood or metal. Patterns for small production runs tend to be the former and for large production runs, the latter. Wood patterns generally have a shorter useful life, although they can be repaired more easily than the metal patterns which usually have a higher first cost. A large production requirement, however, often results

in a lower pattern cost per mold if metal patterns are used.

Wood pattern shop equipment includes different types of saws, planers, joiners, lathes, edgers, routers and drill presses. Metal pattern making equipment includes typical machine shop tools.

IV - EMISSIONS GENERATED AND THEIR CONTROL

GENERAL CHARACTER OF EMISSIONS

Emissions of particulate matter, dust, fume, smoke, and gas are a by-product of most foundry processes and operations. The type, concentration, size and hazards of foundry emissions are tabulated in Exhibit IV-1 by foundry department and operation and are discussed in the following paragraphs.

Raw Material Storage and Charge Makeup

The handling, preparation, and charge makeup of basic foundry raw materials--scrap metal, coke, and limestone--produce moderate amounts of emissions. The storage of coke and limestone over extended periods results in degradation of these materials from the action of the sun, rain, and repeated freezing and thawing. Ferrous scrap corrodes rapidly. Subsequent handling during the makeup of furnace charges causes the limestone dust, coke breeze and rust to be released into the environment. Every conveyor transfer becomes a point where the emission control is desirable, as well as storage bins, weigh hoppers and the location where these materials are placed into charging buckets. Rehandling of coke results in additional degradation and, to a lesser degree, this is also true of limestone.

The preparation of metallic charge materials including the breaking and cutting of large scrap, removing cutting oil residue from machine shop turnings and borings in preparation of briquetting, and cleaning of return scrap represent additional sources of emissions. Breaking and cutting of scrap, and centrifuging of oily turnings and borings are a minor source of emissions. The removal of oil from turnings and borings by ignition results in smoke and vapors. The amount of emissions depends upon the quantity of oil remaining on the turnings and the method of removal.

Melting Department

The melting department is responsible for a large proportion of emissions, producing the need for emissions control equipment on cupolas, electric arc furnaces, preheaters and dryers. Emissions from coreless induction furnaces are usually insignificant due to the normally higher quality of the scrap charge and the fact that no combustion takes place in the unit. Channel induction furnaces also produce minimal amounts of emissions and are seldom provided with emissions control equipment.

Cupola

The cupola is the largest single source of difficult-to-collect emissions, producing fume, smoke, particulate matter, dust and gases. Concentrations are affected by the quality and quantity of charge materials, the use of techniques such as

oxygen enrichment and fuel injection, the volume and rate of combustion air, and the melting zone temperature.[1]

Iron melting in a cupola produces heavy concentrations of emissions ranging in size from greater than 44 microns to less than 1 micron in a gas stream up to 2000° F. Concentrations are affected by the quality and quantity of charge materials, the use of techniques such as oxygen enrichment and fuel injection, the volume and rate of combustion air, and the melting zone temperature.

The range of concentrations of emission components reported by seven foundries are shown in Exhibit IV-2 and are in general agreement with those reported by Engels and Weber[2] shown below.

Chemical Composition of Cupola Dust

Component	Mean Range	Scatter Values
SiO_2	20%-40%	10%-45%
CaO	3-6	2-18
Al_2O_3	2-4	0.5-25
MgO	1-3	0.5- 5
$FeO(Fe_2O_3,Fe)$	12-16	5-26
MnO	1-2	0.5- 9

Exhibit IV-2 portrays the major components of particulate emissions from iron melting cupolas and the percentage by weight of the various materials determined by chemical analysis of the effluent of seven cupolas. The nine components can be grouped

into three major categories: (1) metallic oxides, (2) silicon and calcium oxides, and (3) combustible materials.

The amount of metallic oxides occurring in cupola emissions is believed to be related to the presence of the respective metals in the scrap charge and their partial vapor pressures at the temperature of the cupola melting zone. All metallic oxides except those of iron indicate the presence of nonferrous contaminants or alloying additions in the metallic scrap. Thus, zinc oxide could result from the presence of galvanized scrap; lead oxide from terne plate, lead bearing steel, or red or white lead painted scrap; aluminum oxide from aluminum scrap, chromium, and copper; and cadmium oxides from chrome plated materials. Iron oxides are always to be found in cupola emissions, the concentration being dependent on such factors as scrap thickness, degree of surface corrosion, and temperature in the melting zone.

The oxides of silicon and calcium, representing the second category, derive from lining erosion, embedded molding or core sand on foundry returns, dirt from the scrapyard adhering to scrap, or from the limestone flux.

The third category of emissions, combustible material, includes coke particles, vaporized or partially burned oil and grease and other contaminants swept up the stack by the top gases. Certain other variables influence the amount of cupola emissions.

1. Blast rate. Specific blast rate, when increased, produces more emissions by entrainment of metallic oxides and mechanical dusts, such as coke and limestone. A portion of the entrained particles is filtered out of the gas stream by the burden, with a higher burden offering greater opportunity of particle capture. Emission rates are greater during burn-down, due in part to increased temperatures resulting in larger gas volumes, higher gas velocity, lower collecting ability of the smaller burden height, and greater formation of metallic oxide vapors in the melting zone. Furthermore, the vertical height of the reducing zone is shorter, with less potential for reduction of the already formed oxides.

2. Coke Rate. It is believed that cupola emissions vary directly as the percent of coke in the charge and some researchers have reported such a trend.[2] A degradation of the coke while weighing, charging, and moving downward in the cupola shaft will result in an increase of coke dust in the furnace. Therefore, any change in operating practice resulting in a decrease in the coke charge, including heating of the blast air, or injection of an auxiliary fuel, should have a beneficial effect on the amount of particulates emitted.

3. Afterburners. The use of an afterburner, properly designed and installed, decreases the quantity of combustible particles released to the atmosphere or control system. Sufficient oxygen must be provided through the charging door to permit complete combustion and the upper cupola stack must extend far enough to permit time for combustion before the particles

are exhausted to the atmosphere or to the emissions control equipment. Deficiency in either factor will tend to negate the potential advantage of the afterburner.

4. Oxygen Injection. Oxygen injection in the blast air tends to increase the quantity of particulate emissions by increasing the oxidizing nature of the melting area, and increasing the melting rate. Oxygen injection also increases the melting rate tending to offset the increase of emissions when considered as a function of metal melted.

5. Operating Practices. Operating practices have noticeable effects on emissions levels. The use of wood or paper products for igniting the coke bed results in smoke during this part of the operating cycle. Fluctuating burden height can result in higher emission rates. Coke and limestone require careful handling to limit degradation, and should be screened prior to weighing in order to limit the addition of dust to the charge. Shotblasting of foundry returns and cleaning of oil scrap will result in lower emissions.

Particle size distributions of cupola emissions for 19 installations are tabulated in Exhibit IV-3. A definitive relationship between size distribution and chemical composition of emissions has not been discovered in the literature. It is believed, however, that a high percentage of less than 5 micron particles coincides with a finding of substantial percentages of metallic oxides. Similarly, a high percentage

of greater than 44 micron particles is believed to correspond to large amounts of SiO_2 from foundry returns and dirty scrap, and combustibles, including coke breeze.

Cupola design parameters have no discernable affect on emission type or quantity. Two trends are noted in recent test data:

1. Particulate emission rates from acid lined cupolas ranged from 9.5 to 37 pounds per ton with a median rate of 19 pounds per ton. For unlined cupolas the range was 7.5 to 66 pounds per ton with a median rate of 40.5 pounds per ton.

2. Those cupolas reported as using briquettes in the metallic charges all have emissions rates greater than average of all foundries for which emissions rates are available.

The data also indicate a significant correlation between emissions and blast rate for acid lined cupolas expressed by the formula:

$$E = .05 + .07\ B$$

where:

E = particulate emissions in pounds per ton of melt

B = specific blast rate in SCFM per square foot furnace area.

A plot of the data and the curve is shown in Exhibit IV-4.

Additional data for unlined cupolas indicate a significant correlation between emissions and coke rate and specific blast

rate, expressed by the formula:

$$E = 57 - 6.6\ C + 0.1\ B$$

where:

C = metal to coke ratio.

The curve is shown in Exhibit IV-5.

Oxygen enrichment and natural gas fuel injection have been presented in recent years as techniques to reduce coke requirements, or to increase melting rates when using the same metal to coke ratio. These techniques have been partially accepted by the industry because of their substantial advantages but little research and development work has been done to date that establishes their effect on cupola emissions.

The available data are inconclusive but some show an increase in emissions resulting from oxygen enrichment. Other data however, indicate that although total emissions are increased, the improvement in the melting rate with oxygen enrichment results in a slightly lower emission rate per ton of metal melted. Additional testing is required to definitely establish the effect of oxygen enrichment on emission levels.

Chemical analysis of the metallic oxides in the cupola emissions for one cupola, with and without oxygen enrichment, is shown in the table on the following page.

Metallic Oxide Content of Cupola Emissions with and without Oxygen Enrichment

Metallic Oxide	With Oxygen Enrichment	Without Oxygen Enrichment
MnO	1.0%	1.0%
PbO	5.0	3.0
ZnO	35.0	28.0
CuO	1.0	1.0
FeO	46.0	48.0
SiO_2	11.0	18.0
SnO	1.0	1.0
Total	100.0%	100.0%

The tabulated data show little change in the content of iron oxide for the two operating conditions. It is reported that a visual examination of the plume verifies that the emission rate is higher with oxygen enrichment. Particle size distribution data were not obtained for this test program.

Several research programs are currently in progress to determine the effects of natural gas injection as a replacement for part of the coke charge. The results of one such program[2] are shown below.

Burner Height Inches	Coke Replaced with Gas Percent	Production Tons/Hour	Emissions Pounds/Ton Melt
-	0%	14.8	67.8
50	30	20.1	57.1
50	40	20.3	58.5

The emission rate of 67.8 pounds per ton reported for the control condition with no coke replacement is several times higher than shown in Exhibit IV-4 for a specific blast rate of 272 CFM/SF. Two special conditions, one inherent in the test program and the other a factor of weather conditions, could account for the discrepancy.[3]

The injection of other hydrocarbon fuels including coal and fuel oil has been reported in the literature. Less importance is attached to these efforts than the injection of natural gas, and no data pertaining to the effect of these fuels on emissions have been reported.

Electric Arc Furnace

The number of electric arc melting installations in iron foundries is relatively small, with less than 50 known to exist in 1959, and approximately 200 in 1969.

The emissions from iron melting in the arc furnace come from two principal sources--the burning or vaporization of combustible materials which are in the charged raw materials, and the burning of the electrodes and some of the charge metallics during meltdown. In both cases, the greatest evolution of gases occurs during the early part of the cycle, when meltdown takes place and when the electric power consumption is highest. Although the type and quantity of effluent from combustion of impurities in the charged materials is highly variable depending on the nature and cleanliness of these

materials, the gases produced from combustion of the electrodes are a known and comparatively constant and calculable source of emissions. Approximately 9-11 pounds of electrodes are consumed per ton of iron melted, producing approximately 30 pounds of CO and CO_2 gases, plus 150 pounds of N_2 from air induced into the furnace. Additionally, a quantity of the metallics, principally iron, is oxidized and emitted as oxide fumes.

The electric arc furnace produces moderately heavy concentrations of particulates. From 50% to 80% of the total particles are less than 5 microns in size when melting iron. The gas stream is well over 2000° F, requiring cooling by infiltrated air or water sprays.

The size distribution of particulate matter and chemical analysis of the effluent from three electric arc furnaces are given in Exhibit IV-6. Emission rates are tabulated in Exhibit IV-7 for 19 acid brick lined arc furnace installations with capacities from 2 to 25 tons.

The wide range of emissions rates, from 4 to 40 pounds per ton of charge metal, and the lack of correlation with furnace size indicate that the rate at which emissions are produced is relatively independent of these factors. A slight trend exists toward a relationship between the rapidity with which melting occurs and the rate of emissions produced, indicating that high power inputs to produce short melt cycles will also produce higher emissions. This conclusion is further verified by the relationship depicted in Exhibit IV-8, in which the concentration

of heavy rate of emissions is in the early or meltdown part of the cycle. The less time devoted to the holding or refining period, the more concentrated the emission rate will be during the cycle.

Induction Furnace

Induction melting produces light concentrations of effluent consisting of fume, smoke, and oil vapor. The smoke and oil vapor usually derives from small amounts of cutting oil adhering to the steel or iron scrap.

Coreless induction furnaces used as holding or superheating furnaces charged with molten iron only emit approximately 1.5 pounds of emissions per hour per ton of process weight and therefore are rarely provided with emission control equipment.

Reverberatory Furnace

The reverberatory or air furnace for melting or duplexing produces comparatively light to moderate concentrations of emissions in the range of 1 to 3 grains per standard cubic foot. Combustion occurs within the furnace but the gas or oil fuel is burned in highly efficient burners above the metal bath. Smoke, fume and fly ash are produced in this type of furnace. The smoke results from combustion of oil on the scrap and other combustible materials in the charge. Fume, mostly metallic oxides, appears in the effluent, as it does in any melting furnace, and is the result of nonferrous contaminants in the charge material, vaporized along with a portion of the iron scrap in the molten bath. The concentrations are related to the partial pressures

of the oxides at the melting temperature.

Preheaters

Preheaters serve to raise the temperature of charge before it goes into an induction furnace. As a result, electrical efficiency and melting rates of the furnace are increased and melting time is reduced. Preheating also produces a clean, safe charge because water, oil, emissions and other nonmetallic contaminants are evaporated or burned off.

Preheat equipment includes a cover, base, bucket, combustion chamber, burner and fans.

The type and concentration of emissions found in preheaters are similar to that found in induction furnaces without preheaters.

Inoculation

The practice of producing ductile iron by ladle inoculation of molten iron with magnesium, or other light metals which produce similar effects, accounts for about 10% of total iron tonnage cast. The treatment agent is generally a form of magnesium which can be introduced into the molten iron to produce the desired effect. Exhibit IV-9 illustrates the various methods by which this can be accomplished.

The reaction produced during the inoculation process is a violent one since magnesium vaporizes at a temperature below that of molten iron. The degree of the violence varies with the form and method of introduction of the magnesium. Because

of this, only a relatively low percentage of the magnesium which is introduced is actually involved in the reactions which produce ductile iron, with the remainder being vaporized and expelled as a gaseous fume. The actual yields vary from as low as 15% to high as 80%, depending on the inoculating agent used and the rapidity with which it is added to the iron bath. The yield factor which is most generally accepted is about 35%.

Magnesium is the principal agent causing emissions during inoculation, since the alloying materials which are used as carriers of the magnesium either dissolve in the iron or oxidize to form slag. A major exception to this is the use of magnesium impregnated coke which evolves CO and CO_2 gas as well as MgO fumes. The boiling point of magnesium is about 2,025° F, which is well below the temperature of molten iron and which accounts for the violence of the reaction which takes place. The magnesium in the inoculant is used up in three ways:

1. Reaction with any sulfur present to form MgS, which becomes part of the slag. Although iron which is to be used for ductile iron production is generally pretreated with a basic material such as Na_2CO_3 or $CaCO_3$ to remove sulfur, there is usually 0.02% to 0.03% of the sulfur remaining. This will be effectively eliminated by the magnesium, using about 0.5 pounds of magnesium per ton of iron.

2. A small quantity of magnesium will dissolve in the iron, to the extent of about 0.04%. This amounts to about

0.8 pounds of magnesium per ton of iron.

3. The remaining magnesium will boil off, forming MgO upon contact with the air. The amount of magnesium which is added will vary from 0.12% to 0.30% of the iron treated or from 2.4 to 6.0 pounds of magnesium per ton of iron. Deducting the 1.3 pounds of magnesium which was consumed by sulfur reaction or dissolved in the iron leaves from 1.1 to 4.7 pounds of magnesium per ton or iron treated to form MgO fumes. This will result in from about 2 to 8 pounds of MgO fumes generated per ton of iron treated.

The fumes from the inoculation process will be largely MgO, with this material accounting for from 60% to 80% of the total, depending on the form in which the magnesium was introduced and the violence of the reaction. The more violent reactions, particularly when silicon-magnesium alloys are used, will also produce SiO_2 particles in the emissions. Iron oxide, as Fe_2O_3, will also be found in the emissions and will constitute the second most important material present, after MgO.

Particle size of the emissions will be fine for the MgO and Fe_2O_3 portions with the silica and alumina particles generally of larger size. These particles are under one micron in size and are difficult to collect, requiring the use of fabric filters or high energy wet scrubbers.

The reported results from the inoculation station of a large gray and ductile iron foundry are as shown on the following page.

Iron Treated	-	30 Tons per Hour
Inoculant Added	-	20-22 Pounds per Ton Iron
Inoculants Used	-	Soda Ash MgFeSi-(10% Mg) 75% Fe
Emissions Produced	-	100 Pounds per Hour 3.3 Pounds per Ton Iron
Emissions Analysis	-	32.0% MgO 18.7% Fe_2O_3 9.5% CO_2 4.2% SiO_2 2.5% S 1.1% C 0.6% CaO Balance Na_2O

This station was used for ductile iron inoculation, desulfurization and ferrosilicon inoculation, which explains the presence of such elements as sulfur and calcium in the catch. The amount of magnesium in the inoculant was 2.25 pounds per ton of iron treated. At a yield of 35%, this resulted in 1.45 pounds vaporized, giving 2.4 pounds per ton of MgO. This amounts to 73% of the emissions actually captured.

Molding, Pouring and Shakeout

Molding

The molding operation is not a major contributor to foundry emissions. In green sand molding, the moisture in the sand acts as a dust suppressant. Small quantities of dry parting compound are emitted when the mold halves are dusted with this material. Liquid partings used to prevent molding sand from sticking to metal patterns or match plates have a kerosene base. When sprayed on the patterns, a portion of the vehicle vaporizes,

and the solids such as stearic acid are sprayed into the air in the immediate environment. Sea coal is also used as a mold spray and is released into the atmosphere. Concentrations are light, approximately one grain per standard cubic foot.

Molding sands consist of silica, zircon, olivine, chamotte, and occasionally other mineral grains bonded with clay, bentonite, portland cement, plaster of paris, petroleum residues and bitumens. Additives are often added as cushioning materials, with such materials as sea coal, pitch, wood flour, silica flour, perlite, ground cereal hulls and chemicals in common use. Binders and additives used to improve the strength, molding properties, and casting properties of sand also contain amounts of combustible materials which form gas which evolves during the pouring and cooling of molds.

Green molding sands, which are most commonly used in iron foundries, may contain the following additives.

Additive	Amount by Weight
Wood flour	0.5% - 2.0%
Sea coal	2.5% - 8.0%
Cereal binder	0.5% - 1.0%
Silica flour	0.0% -15.0%

Pouring

Emissions from the pouring operation are much more severe than molding and are usually more difficult to capture. The hot metal, when poured into the mold, first ignites and then, as oxygen in the mold is exhausted, vaporizes such materials in

the sand as sea coal, cereal and synthetic binders, and core binders. Steam is formed in green sand molds from the moist sand and in the full mold process, the complete pattern is consumed. Emissions are affected by the quantities of the different source materials required to produce satisfactory castings.

Most of the emissions are steam, vapor, and smoke with a smaller percentage of particulate matter. In the case of the full mold process and many of the synthetic binders, the emissions such as hydrogen chloride and methyl chloride are toxic, and only the low concentrations per mold, coupled with general foundry ventilating systems, prevent potentially serious physiological reactions in molders, pouring crews and shakeout men. The concentration of smoke, fume, and vapors is related to the hot metal temperature, length of time between pouring and shakeout, and the quantities of binders, moisture and parting compounds required to make a satisfactory mold.

The effect of molten metal during pouring is to vaporize the volatile materials and the water contained in the molding sand adjacent to the mold cavity. Although this effect decreases rapidly as the distance from the cavity increases, the gases formed are forced through the molding sand and vent holes and are expelled into the surrounding atmosphere. The nature of these gases is illustrated in Exhibit IV-10. The combustible portions of the gases are relatively high, consisting of

from about 4% for dried molds to as high as 76% for molds with a high percent of cereal and bentonite. The H_2 in the combustibles comes from decomposition of water vapor, while the CO comes from combustion of organic materials.

The volume of gas formed is illustrated in Exhibits IV-11 and IV-12, for various mold materials. Gas evolved ranges from 200 to as high as 700 cubic feet per cubic foot of sand at 1,800° F. Only a small portion of the sand adjacent to the sand-metal interface approaches this temperature and gas formation drops off rapidly as the distance from the interface increases. Although relatively small amounts of particulates are involved, the toxicity of the unburned combustibles makes collection a desirable factor. The high temperatures associated with pouring often result in burning of gas as it leaves the molds. This afterburning is desirable to completely convert the combustibles to CO_2 and water vapor and to eliminate explosion and toxicity hazards, particularly if the mold contains oil sand cores.

Examples of toxic emissions are carbon, styrene, low molecular weight polystyrene, ethylbenzene, methyl chloride, chlorine, hydrogen chloride and decomposition of evaporative products in addition to CO, CO_2 and H_2O.[4]

Shakeout

At the shakeout, the action of separating castings from the mold brings the hot casting into contact with moist and cooler molding sand originally located away from the mold cavity.

The result is the creation of additional smoke, steam and vapor of the same type emitted during the pouring operation. Concentration of the emissions is momentarily high, over three grains per cubic foot, but the casting is cooler than the molten metal while pouring allowing the sand to be quickly separated from the casting. The emissions are often able to be contained and removed through the use of ventilated hoods.

Cleaning and Finishing

Cleaning and finishing operations produce emissions less troublesome than other foundry processes. Emissions are generally larger and easier to capture and separate from the airstream though concentrations can occasionally exceed three grains per standard cubic foot. Particle sizes are as large as five to seven microns and their concentrations are dependent upon type and surface speed of the grindstone and the amount of pressure exerted by the grinder. Chipping operations produce such large particles that control of the effluent is not required. Abrasive shotblasting produces high concentrations of metal particles, sand dust, and broken shot but modern blast machines are provided with high efficiency fabric filters designed for the purpose. The concentration of these emissions is a function of the quantity of embedded sand on the castings, fracture strength of the shot, and length of time in the blast cabinet or room. Sand blasting, now rarely used, produces high concentrations of sand dust with concentrations related to air pressure, blast sand characteristics and length of time required for cleaning.

Effluent from annealing and heat treating furnaces is minimal except when the castings have previously been oil quenched. Concentration of the resulting smoke is a function of temperature and amount of oil residue on the casting surfaces.

Painting is infrequently done by foundry departments. Effluent from this operation consists primarily of vapors from thinners and concentrations depend on the type and quantity of the volatiles.

Sand Conditioning

New molding and core sand are ordered to a desired screen test for specific use but always include some fines. The escape of fines into the atmosphere varies with the method of handling. Closed systems such as pneumatic conveyors release only small amounts and are provided with exhaust connections at the inlet and the receiver. Systems using belt conveyors and bucket elevators release fines and dust at most transfer points between conveying units.

Many smaller foundries unload and transfer sand to floor level bins manually, or with front-end loaders. Load and unload points are generally uncontrolled. The handling of conditioned molding or core sand presents fewer problems than new sand because of the moisture content and binder additives. Control equipment and hoods at transfer points are generally not required.

Shakeout or return sand produces more emissions because it has been partially dried from contact with the hot metal. Introduction of fresh spill sand from the molding floor and excess prepared sand helps considerably in cooling, moistening and decreasing dust and fines from being emitted at conveyor transfer points. It is considered good practice to enclose the transfer points and provide exhaust connection at these locations and also at the vibrating or rotating screen and the return sand storage bin.

Moderate concentration of fines, in the range of one to three grains per standard cubic foot, dust and binder materials are emitted at the sand mixer. Concentrations are substantially increased if the muller is equipped for sand cooling. This is accomplished by directing a blast of cooling air either over or through the sand while it is being mixed. The air blast entrains small particles and must be exhausted to a control device to separate the particulate matter from the air blast.

Coremaking

Emissions resulting from coremaking operations are generally in the form of fume and gas, the type and amount depending on the nature of the core mix and the coremaking process. The core mix is typically comprised of silica sand, binder and moisture. Sand emissions are light, under one grain per standard cubic foot. The binders used in coremaking include linseed oil, core oil, wheat flour, sulphite, pitch, oilless binders, resins,

silica flour, fireclay, wood flour, iron oxide, bentonite, and silica sand.

Core binders that generate a considerable volume of gas on pouring of the mold are undesirable. A typical core mix for malleable iron castings might be as follows:

Sand	Cereal	Moisture	Oil	Binder
92%-98%	.75%-1.25%	0%-5%	0%-1%	0%-.5%

Core mixes for gray iron castings vary greatly according to the general size of the casting and the specific application for the part. The rate of gas volume generated in a core during the curing process is largely a function of baking time. Exhibit IV-13 illustrates the effect of baking time on the volume of gas generated at various baking temperatures. A review of the curves quickly points out that the gas content is reduced by baking at higher temperatures.

Resinous binders, normally used in shell molding processes, cause various hazards. The decomposition of the products is extremely toxic. Dermatitis is the principal effect caused by an excess of free phenol, formaldehyde, hexamethylenetetramine, or alcohol. The extent of the hazard depends upon the specific agent and the tolerance level for that agent. Phenol, for example, can cause dermatitis and do organic damage to the body at levels exceeding five parts per million. Formaldehyde is a nuisance at levels exceeding five parts per million. Hexamethylenetetramine can cause skin irritations with direct contact.

Other toxic and irritating materials include furfuryl alcohol, ethyl alcohol, methyl alcohol, urea, carbon monoxide and silica dust. These can be released during shell operations. Each has varying minimum levels of concentration before its toxicity or irritation are critical or a nuisance. Ventilation becomes the important factor in minimizing these hazards.

The sand-to-oil ratio has a bearing on the volume of gas generated in a core during pouring. The effect of sand-to-oil ratio on the amount of core gas given off during pouring is illustrated in Exhibit IV-14. The relative amounts of gas produced by various core binders is given in the table. Composition of gas has not been determined.

Core Binder	Cubic Centimeter Gas per Gram
Linseed	380 - 450
Petroleum	350 - 410
Urea Resins	300 - 600
Cereal	550 - 660

Inventory of Foundry Emissions

An analysis of cupola and electric furnace emissions and the factors affecting the rates of emissions shows that an average of 20.8 pounds of particulate emissions are produced per ton of metal melted in an iron foundry cupola, and that an average of 13.8 pounds of particulate emissions per ton of metal melted results from direct electric arc furnace iron production.

Exhibit IV-15 shows the total estimated particulate emissions generated by melting operations in foundries using cupolas and direct electric arc furnaces in 1969. The exhibit shows total quantities for each of nine geographical regions and the nationwide totals based on the molten iron production for the year and the above emission rates. Based on a survey of iron foundries, considering the number and capacity of furnaces equipped with control systems, the effectiveness of the control systems, and the number of uncontrolled furnaces, it is estimated that 75% of the particulate emissions generated are presently being released to the atmosphere.

Exhibit IV-15 also shows estimated quantities of carbon monoxide generated and emitted. The first estimate is based on an average cupola operating with a 7/1 coke ratio, using coke with a carbon content of 91%, and with 11.6% carbon monoxide in the top gas. Under these conditions, 276 pounds of carbon monoxide is generated per ton of metal melted.

The amount of carbon monoxide emitted to the atmosphere is dependent on a number of factors including the temperature of the top gas, the availability of infiltrated air to provide oxygen for combustion, the completeness of combustion, and the percent of the total time that burning of the carbon monoxide occurs. With sufficient oxygen from the infiltrated air and with constant combustion, the carbon monoxide content should be completely burned. Several factors tend to work against this ideal condition, including the flame being extinguished by each

charge addition, lack of immediate reignition either without an afterburner, or with an improperly directed flame from an afterburner, varying carbon monoxide content precluding constant combustion, and variable air supply. A conservative estimate of 50% combustion efficiency has been applied to the quantities of total carbon monoxide generated to obtain the estimated weight of this gas emitted into the atmosphere.

The results of the calculations for emissions from melting operations can be summarized as follows for 1969 nationwide production levels:

Total castings produced	16,614,000 Tons
Total molten iron produced	24,367,000 Tons
Total particulate emissions generated	243,000 Tons
Total carbon monoxide generated	2,924,000 Tons
Total particulate emissions emitted	182,000 Tons
Total carbon monoxide emitted	1,462,000 Tons

The above data are derived only from cupola and electric arc furnace operation. Emissions from other melting equipment including induction furnaces and reverberatory furnaces are negligible, not only because of conditions inherent to these types of furnaces but also because generally cleaner scrap metal is used for furnace charges and a relatively small percentage of the total iron is melted in these furnaces. Preheating of less clean scrap for charging into induction furnaces will add significantly to the emissions inventory only when the process is substantially more widely used than it is now. At its present level of application, preheater emissions are also negligible.

Emissions from non-melting foundry processes, with a single important exception, are often controlled as a standard practice, have the most effect on the foundry environment, and are released to the atmosphere in lesser quantities than the cupola and electric arc furnace emissions. The concentration of these emissions at their source can be substantial as in the case of the shakeout, abrasive cleaning, and grinding, but the particles emitted are often large with a relatively high settling rate. The portion of the particulate matter escaping the normal collection ductwork tends to settle out within the foundry building.

The non-melting emissions posing the greatest current problem are those resulting from coremaking. A minor problem existed in the past when practically all cores were made from oil sand. This type of core, however, is thermally cured in a core oven, and the emissions are relatively easy to capture from the core oven stack for afterburning. The use of organic chemical bonding agents, that are becoming more and more widely used, intensifies the problem since these produce emissions extremely difficult to capture due to their method of application.

Molds or cores made from air set sand are often set out on the foundry floor or racks while the sand sets. The local environment in this situation is often extremely poor. Not only is it difficult to capture the emissions over a large floor area, but the dilution of the gaseous emissions by the air makes the resulting mixture difficult and expensive to incinerate in any type of afterburner.

The situation in many foundries for thermally cured chemical binders when making shell or hot box cores causes similar problems for the local environment as well as afterburning. The resulting odors can be detected beyond the foundry property in many cases.

Exhibit IV-16 shows estimated nationwide quantities of particulate emissions from non-melting operations by geographical regions. The exhibit shows that an estimated 1,504,000 tons of particulates were generated, and that 76,600 tons of the total are emitted into the atmosphere.

CONTROL OF FOUNDRY EMISSIONS

The current state of the art of foundry emissions control does not fully satisfy the needs of the industry. On a purely technical basis, virtually all particulate and most gaseous emissions can be controlled. However, the cost of such control for several basic foundry processes may be beyond the present financial ability of the small and medium foundries, which comprise approximately 90% of the industry.

The emissions more difficult to collect are by and large those with large concentrations of very fine particles five microns and smaller. Conversely, the emissions easier to collect are those consisting entirely of large particles.

The problems arising from each type of foundry contaminant and the techniques of pollution control vary with the nature of

the specific situation. Of all techniques available to control foundry pollutants, emission collection equipment systems are the most significant. These systems, which include dry centrifugals, wet collectors, fabric filters and electrostatic precipitators, vary widely in design, capabilities, cost and application. A tabulation of different emission collection equipment designs and their particular application to foundry processes is shown in Exhibit IV-17.

In addition to the many dust collection equipment systems which are in use, a variety of types of hoods, ventilating and exhaust systems and various other techniques are employed to capture or exhaust foundry emissions.

Exhibit IV-18 presents a summary of control equipment on gray iron foundry melting furnaces and a review of the collection efficiencies of the control equipment is given in Exhibit IV-19.

Raw Material Handling, Preparation and Charge Makeup

Few fixed emission points exist in typical yards where control can easily be applied; however, most of the emissions which come from these areas are dusts of relatively large particle sizes which settle readily. In a few cases, ventilation systems and dry centrifugal collectors have been installed in the charge makeup area, when it is located inside an enclosed building.

The one area which has been receiving attention in recent years involves those foundries in which metallic charge materials are either burned to remove nonmetallic coatings or accompanying nonmetallic debris, or are preheated to remove moisture or oily coatings. Since these operations are almost always performed in a fixed combustion unit of some type, emission control systems are relatively easy to apply. Medium energy wet collectors have been used where oil fumes were present, and dry centrifugal collectors were applied where dry dusts were to be collected.

Cupola Melting

It is estimated that approximately 360 iron foundry melting systems in the United States are currently equipped with some type of air pollution control equipment, ranging from wet caps to fabric filters, wet scrubbers, and electrostatic precipitators. In fact, every known method, from simple spark screens to complicated systems such as electrostatic precipitators, has been tried with varying degrees of success. Although selection of cleaning equipment varies with the purpose of the installation, recent attention has centered on those techniques which have been most successful in high efficiency control of emissions, such as high energy wet scrubbers and fabric filter baghouses.

The problem of selecting gas cleaning equipment for cupolas depends essentially on the degree of efficiency required, need to meet existing pollution codes, and the economic factors of capital and operating costs.

Wet caps, dry centrifugal collectors, wet collectors, fabric filters and electrostatic precipitators are the different collection systems which have been used for cupola emission control.

Wet Caps

Approximately 95 gray iron foundries had cupola wet caps in 1967. These collectors are placed directly on top of cupola stacks and thus do not require any gas-conducting pipes and pressure-increasing blowers.[2] Wet caps are relatively simple designs and usually consist of one or more inverted cones surrounded by a collecting trough. Energy requirements are low and collection efficiency is best for particles 44 microns in size and larger. These systems are most practical in plants having an existing supply of low cost water and the ability to dispose of collected dust in sludge form.[5] Furthermore, some type of wet cap system is often employed in conjunction with high energy wet collector installations on cupolas.

The low efficiency of the wet cap has caused it to decline in use in recent years. Attempts are now being made to develop higher efficiency of wet caps with multiple spray sections.

Dry Centrifugal Collectors

This is a low energy unit designed for larger sized particles in light to moderate concentrations. In a cupola installation, ductwork and an exhaust fan to draw gases to the collector are required. These systems also necessitate capping the cupola and

installing a cooling spray to reduce the temperature of exhaust gases flowing to the collector. Often, dry centrifugal units are used as precleaners of hot blast cupola top gases prior to feeding into a recuperator. Furthermore, this type of collector is an integral part of most high efficiency emission collection systems. In 1967, approximately 15 gray iron foundries had dry centrifugal installations which were not part of a larger cupola emission collection system. The low efficiency of the dry collector has resulted in almost no new installation on cupolas in recent years, unless they were part of a larger system.

Wet Collectors

Several different medium and high energy designs have been applied on cupolas. A wide range of capacities and collection efficiencies is available. These systems are usually used where moisture and/or high temperature are present in the emission. A complete installation requires ductwork, an exhaust fan and capping of the cupola. As with wet caps, these systems are most practical where low cost water and sludge disposal equipment are available.[5, 6] Although only 30 gray iron foundries had cupola wet collectors in 1967, recent trends indicate that installations of this type system are increasing more rapidly than any other.

Fabric Filters

When cupola collection efficiencies of 99% or higher are required, the fabric filter is the system type often selected. Although various fabric materials are available, glass fabric

is typically chosen because of its resistivity to high temperatures. Complete installations may include numerous components such as a baffle, raised cupola stack and lid, ductwork, exhaust fan, spray coolers and other items in addition to the fabric filter unit. Another type of installation involves using heat exchangers instead of spray coolers. Fabric filter units can be installed to handle more than one cupola if desired.[6] Approximately 39 gray iron foundries were equipped with fabric filters on cupolas in 1967.

Electrostatic Precipitators

Rare applications of these systems have been made on cupolas. Excessive costs, operating and maintenance problems have limited their use. Only one gray iron foundry was reported to have a cupola electrostatic precipitator installation in 1967. Additional installations have been made in the past few years.

Afterburners

In cupola installations, afterburners or gas igniters can be employed for burning the combustible top gases, thereby reducing the opacity of particles and CO discharged from the stack, and for eliminating potential explosion hazards from cupola gases. Afterburners are usually located just below or opposite the charging door.[6]

Preheaters

Burning of unburned products of combustion can also be accomplished at times with a type of blast air preheater which

burns exhaust gases from the cupola. Not only is thermal efficiency of the cupola capable of improvement, but the preheater acts as a settling chamber for collecting coarse dust.[6]

Electric Arc Melting

A number of significant differences exist between the electric arc and cupola air pollution problem. First, the electric arc melting process and emissions problem are less complex. Second, since the average particle size of electric arc emissions is considerably smaller than that of the cupola, different collection objectives exist. Finally, more uniform electric arc operating conditions and lower emissions evolution tend to simplify the design of control equipment for this process.[8]

In 1967, approximately 24 gray iron foundries had some type of air pollution control equipment for electric arc melting processes, but the number of installations has increased substantially in the last few years.

Fabric Filters

Fabric filters are best suited for electric arc furnaces and have been most frequently applied. This is due to the extremely fine particle size of dust and fume emitted from electric arc furnaces. Complete installation of a fabric filter unit to the furnace includes ductwork, an exhaust fan to draw gases to the collector and a means of collecting the gases

from the furnace.[6] Approximately 20 gray iron foundries had fabric filter installations on electric arc melting in 1967.

Wet Scrubbers and Electrostatic Precipitators

These collection systems are rarely used on electric arc furnaces. Wet scrubber limitations include the existence of too much fine dust and high energy requirements. Electrostatic precipitators can encounter exhaust volumes too low for their design requirements.[9] Four foundries were reported to have wet scrubber installations in 1967 on electric arc melting processes.

Furnace Hoods

Electric arc furnaces are also equipped with various types of hoods to capture pollutants.[10] Arrangement of electrodes and gear above the furnace top as well as the method of charging and operating largely determines the hood type applied. Often, some type of hood is used in conjunction with a collection unit.

1. Full Roof Hood - This type of hood is attached to the top ring of the furnace. It requires stiffening to prevent sagging at high temperatures and protection of electrodes to prevent short-circuiting.

2. Side Draft Hood - This unit is located on the side of the roof close to the electrodes to produce a lateral type of control. An overhead hood at the charging door is also often used with the side hood.

3. Canopy Hood - A canopy hood, located above the craneway, usually offers little interference with furnace operating procedure. Effectiveness of these units is limited due to equipment requirements needed to handle the large volumes of infiltrated air.[6]

Fourth Hole Ventilation

In this system, a water-cooled probe is directly connected to the furnace roof. The probe maintains a carefully controlled draft in the furnace body.

Snorkel

This technique is similar to the fourth hole ventilation method except that the extra hole serves as a natural pressure relief opening for the furnace.[8]

Electric Induction Melting

No combustion and only limited metal oxidation occur in this type of furnace and since relatively clean scrap is used for charge material, no serious emissions problem exists for induction melting of iron.

Induction melting produces light concentrations of emissions consisting of fume, smoke, and oil vapor. Control devices are usually not provided or required. The smoke and oil vapor usually derives from small amounts of cutting oil adhering to the steel or iron scrap, and can be eliminated by preheating prior to charging into the induction furnace.

The burning of oil residue on the scrap produces objectionable effluents requiring the use of emission control equipment. Afterburners and wet scrubbers on the preheater, either separately or in combination, are often used to reduce these emissions to acceptable levels.

Reverberatory Furnace

The emissions from this type of furnace come principally from the combustion of oil or gas fuel, plus some slag and iron oxide which is carried up the stack with the products of combustion. The older installations are exhausted into the atmosphere through a stack or chimney. Medium energy wet scrubbers with a 3- to 20-inch pressure drop and fabric filter bag collectors have been applied in a few cases.

The rotary reverberatory furnace has been only recently utilized in small installations in iron foundries. A small quantity of emission in the form of waste products of combustion and slag particles is given off. None of these installations has been equipped with a collector.

Inoculation

The original installations of inoculation stations either exhausted directly into the foundry building, or were equipped with a ventilation hood which then exhausted into the atmosphere. In recent years, ductile iron inoculation stations have been equipped with collecting hoods, or have been installed in enclosed rooms, and the resultant gases have been drawn off by

means of an exhaust fan, into a dust collection unit. Medium energy wet scrubbers and fabric filter baghouses have been used for dust collection for ductile iron inoculation stations.

Mold Pouring, Cooling and Shakeout

Capture of emissions resulting from pouring and cooling of molds has been common for several decades for those high volume production foundry installations where finished molds are set out on continuous car-type mold conveyors, providing fixed locations for pouring, cooling, and shakeout operations. With this type of equipment, side draft hoods are often provided for the pouring area and side or bottom draft hoods at the shakeout, with the mold cooling conveyor between these two points fully hooded with sheet metal. Ducting is commonly provided from each area to a single control device, usually a wet scrubber or dry centrifugal collector.

Collection systems have been, and still are, uncommon for those smaller production and jobbing foundries where completed molds are set out on the foundry floor or on gravity roller conveyors, and where the pouring and cooling utilize a substantial percentage of the molding floor. The problem for this type of operation is related more to the cost of capture of the effluent with a minimum amount of infiltrated air, than to separation of the effluent. With pouring and cooling in nonfixed locations, and without hoods to capture the effluent, much of the air in the foundry would require handling at a prohibitive

cost, due to the volume processed. Furthermore, large particles quickly settle out on the floor and machinery since the airflow is far below the minimum capture velocity. A partial solution to the problem in the pouring area has been provided in nonferrous foundries by a traveling vent attached to the pouring ladle bail, and ducted by means of flexible tubing and specially designed connecting ducts to a suitable emission control unit. This technique permits capture of effluent resulting from mold pouring with a minimum of infiltrated air. Additional venting is required during subsequent cooling, however, and this is not practical when the ladle is moved on to pour the next mold, with the result that significant emissions are still not collected. There is no reason why similar equipment could not be developed for iron foundries.

Large castings, such as automotive dies and machine beds, can be cast by the full mold process. Generally, no central pouring station is provided and the smoke generated is released directly into the foundry building, creating an industrial hygiene problem.

The current method for controlling the smoke is through the use of ventilating fans. A properly designed arrangement of fans and makeup air systems may produce a relatively clear shop environment, but as the smoke is exhausted from the foundry, an air pollution problem is created. The problem is further complicated by the fact that ventilating fans exhaust large volumes of low pressure air and are not designed to be connected to a duct and collector arrangement.

Sand Preparation and Handling

Processes such as mechanical sand handling systems and sand mixing or reconditioning equipment produce an emissions problem. Medium energy wet collectors are best suited for effluent control. Occasionally, fabric filters are employed only when dry sand conditions exist. Often, some type of hood is used to capture emissions in sand conveyor systems especially at transfer points. As with many other processes, ductwork and an exhaust fan are required in a complete collection system.[9]

Coremaking

The gases emitted from bake ovens and shell core machines are a serious problem and difficult to control. Usually these gases are permitted to exhaust to the atmosphere through a ventilation system. Sometimes, catalytic combustion devices are used on core ovens to burn gases to noncombustible analysis.

Other coremaking processes present a less serious air pollution problem capable of control. In core-blowing or core-shooting, fabric filters are usually selected if control equipment is desired. In rare instances, medium energy wet collectors are used. For core grinding, cotton or wool fabric filters and medium energy dry mechanical and wet scrubbers are frequently selected.[9]

Cleaning and Finishing

Dusts from gate and riser removal are generally controlled with local exhaust systems connected to dry mechanical collectors, medium energy wet collectors, or possibly cotton or wool fabric filters. Sometimes exhaust hoods are provided above the work station. Other cleaning processes such as abrasive shot-blasting and tumbling are commonly controlled with fabric filters or medium energy wet collectors. Applications of dry mechanical collectors are also made for abrasive cleaning processes.

Most of the trimming and finishing operations generate pollutants and require control. Chipping and grinding operations are normally provided with local exhaust hoods connected to either high efficiency centrifugals or fabric filters. Wet collectors are used if central sluicing systems are employed or where grinding exhaust is combined with other cleaning room operations.

Surface painting requires ventilation to reduce the hazard due to volatile materials being atomized in the air. Exhaust systems are generally used where dip painting is performed. Open tank installations are also provided with local ventilation hoods.[9]

Heat treating furnaces for malleableizing or for other treatments of iron castings present the usual problem of emissions from combustion of liquid or gaseous fuels. In most

foundries, these are exhausted into the foundry building, or through a stack to the atmosphere. Medium energy wet scrubbers are an effective means of cleaning these exhaust gases, but have not been applied in many cases.

Miscellaneous Areas

Some of the non-manufacturing areas are sources of air pollution in foundries. These include the pattern shop and crating or boxing for shipping, where woodworking operations occur. Dry centrifugal collectors are commonly used to collect the wood dust and chips from these operations. Machine shops and metal pattern shops usually present minor problems of collecting the dust from machining or grinding of cast iron. Dry collectors are commonly used for this purpose.

COST OF EMISSION CONTROL SYSTEMS

Generally, all foundry emissions are expensive to control, and since the collected material has little or no value, its collection adds no value to the foundry's product. The installation and operating costs of control systems vary over a wide range.

The cost of an emissions control system depends on the following variables:

- Properties of emissions, including size distribution, density, chemical composition, corrosiveness, solubility, combustibility, and concentration.

- Difficulty of capturing the emissions in an air, gas, or water stream of moderate temperature and volume.

- Difficulty of separating emission particles from the captor medium.

Properties of the matter to be collected are generally fixed by the process and raw materials, although modification of the equipment could possibly alter the properties. Assuming them to be fixed for a given operation, the first consideration is the cost of capture. If the operation occurs in an enclosed and fixed location such as a melting furnace or oven, capture may be relatively simple and may be accomplished at low cost although emission collection and separation costs could be high. If the location of the operation is not fixed and occurs in the open, such as pouring of molds set out on the foundry floor, then capture is difficult and more expensive. In the latter case, with pouring emissions dispersed throughout the plant, much of the air in the building must be processed through the control system to collect the emissions. A system of this capacity would be expensive to install and operate.

The third factor of system cost is the difficulty of particle separation from the captor medium. Large, dense particles, such as metallic fragments from grinding operations, can usually be separated by the use of relatively low cost dry centrifugal collectors. Submicron-sized metallic oxide particles from a melting furnace, however, require

more costly collection equipment such as high energy wet scrubbers or fabric filters.

The basic and auxiliary equipment costs are the main components of the total capital cost. These equipment costs varied on the average from 42% to 66% of the total capital cost. On an individual foundry basis, the ratio of equipment to total investment varies considerably. The following information illustrates the average ratios observed for cupola installations.

Equipment Costs as a Percentage of Total Investment Cost

Control System	Equipment Cost/Total Investment Average	Range
Wet Caps	42%	36% - 67%
Mechanical Collectors	55	36 - 79
Low Energy Wet Scrubbers	65	48 - 80
High Energy Wet Scrubber	66	48 - 85
Fabric Filter	65	41 - 82

The wide variance in the range of equipment cost as a percent of total investment is caused by several factors. The data represent installations at many foundries which have many different requirements. Some foundries had available space for the control equipment while others required some plant modifications to install the equipment. The age of the foundry affects the cost. In some new foundries, the pollution control equipment was designed as an integral part of the facility, while in old foundries, additional costs must be incurred for adaptation of facilities.

Cupola Melting

The approximate installed cost of control equipment is given in the following table:

Approximate Installed Cost, $/ACFM for Cupola

System	Cost
High Energy Scrubber	$6.50-$8.50
Low Energy Scrubber	1.75- 2.50
Fabric Filter	7.50- 9.00
Mechanical Collector	3.00- 5.00

The annual operating costs are given in the following table:

	Approximate Annual Cost $/Ton	
System	Above Charge Door Take-Off	Below Charge Door Take-Off
High Energy Scrubber	$2.10-$9.00	$1.00-$4.00
Low Energy Scrubber	.90- 5.00	.35- 3.50
Fabric Filter	2.00-10.00	1.00- 4.00

The wide range in operating cost is due to variations in cupola utilization. Foundries operating at 4,000 hours per year will approach the lower limit of the range and foundries operating at 1,000 hours per year or less will approach, and possibly exceed, the higher value.

Electric Arc Melting

The approximate installed cost of control equipment is given in the following table.

Approximate Installed Cost, $/ACFM for Electric Arc

Roof Diameter	Local Hood		Remote Canopy Hood	
	Intermittent Operation	Continuous Service	Intermittent Operation	Continuous Service
6 feet	$2.10	$2.50	$1.25	$1.85
8 feet	1.90	2.50	1.25	1.75
10 feet	1.85	2.35	1.25	1.70
12 feet	1.85	2.30	1.25	1.60
14 feet	1.80	2.25	1.25	1.60

Annual operating costs of fabric filters are given in the following table:

System	Approximate Annual Costs $/Ton	
	Canopy Hood	Local Hood
Fabric Filter	$2.90-$8.00	$1.70-$4.00

The range in annual costs, as in the case of the cupola, is due to variations in electric arc utilization. Furnaces operated at 4,000 hours per year will approach the lower limit and foundries operating at 1,000 hours per year will approach the higher value.

V - RECOMMENDED PRACTICE FOR TESTING PARTICULATE EMISSIONS FROM IRON FOUNDRY CUPOLAS(1)

by A.F.S. & G.D.I.F.S.

INTRODUCTION

The iron foundry industry has had many air pollution studies conducted on cupola emissions at their various plants. Of great concern to the industry and to the individual firms that have conducted such testing are the many varied and diverse test methods and test procedures used by the variety of independent organizations conducting such tests. The diverse methods and equipment used in performing such tests have made comparison and evaluation of results impractical or a near impossibility. Many of the tests conducted have shown marked inconsistencies between individual test runs by the same test group and also in comparing the results on the same system by different testing organizations.

A number of the procedures used in cupola testing suffer from obvious inadequacies when they are carefully scrutinized. Consequently, it has been deemed desirable and necessary that a recommended test procedure and testing method be made available to assist the metalcasting industry in achieving the maximum in emission control with the minimum of wasted and misdirected effort and expense. Since the industry is unique in the large, nonproductive investments needed to gain compliance with air pollution control requirements, it is especially significant that its emissions be evaluated by test methods and procedures able to produce consistently reliable results detailing these emissions, but do not unnecessarily and unfairly penalize the plant.

Particulate emission tests of cupola stack gases are done under varied conditions and in several different locations, depending on the test objective. Both location and objective influence the test equipment employed although the two usual purposes will be:

1) to determine nature and/or quantity of emissions released in the raw cupola gases

Note: The recommended procedure discussed in this section has, of this date, not been endorsed by any bodies other than A.F.S. and G.D.I.F.S. and is presented for information only.

2) to determine nature and/or quantity of emissions on the cleaned gas side of a control unit.

Raw gas test locations:

a) In cupola stack, above charging door. This is the most difficult location for testing. Gas flow is extremely uneven and the flow rate is relatively low; gas temperature is high - often 1200°-2200°F - and fluctuating; dust loading is extremely uneven because of channeling caused by indraft of much cold outside air drawn into the cupola stack through the charge door. This test location is necessary where a cupola has no control systems or has a wet cap type collector.

b) In inlet duct ahead of dust collector. This is an easier location if a reasonably straight duct run is available. Duct velocities and dust loadings are more uniform and confined in a smaller cross section. Normally gases will be cooled to 500°F or lower at the sampling point from evaporation of cooling water. The added volume of water vapor must be measured and considered in gas density calculations and dust loadings if reported in grains per standard cubic feet dry gas. Inlet and outlet samples should be supplemented wherever possible by using the catch as a check for the test data. Catch can be more readily obtained from dry collector types especially for a complete melting cycle.

c) Catch plus outlet loadings. Where dry collectors are employed, the entire test procedure is simplified by actual weighing of collected material. The higher the efficiency of the collecting device the more nearly the catch will represent the raw sample. Chances for error are diminished because of quantity

of collected material available although it will be difficult to obtain accurate catch quantities except for a complete melting cycle - thus providing an averaging of the peaks and valleys of emission concentrations.

See comments for outlet loading under "Cleaned Gas Locations".

Cleaned Gas Locations:

a) <u>After dry collector</u>. Conventional dust sampling techniques will be satisfactory for such locations. Coarse particles will be removed by a dust collector so the importance of a large diameter sampling probe diminishes. Water vapor content of the gas should cause no condensation problems with 350° to $550^{o}F$ gas temperatures. Collecting device in sampler can be influenced by intended analysis - gross weight, particle size distribution, chemical composition, particle count, etc.

b) <u>After wet collector</u>. Sampling problems are more complicated than after dry collectors because gas stream is saturated or nearly so. Close coupling of sampling components is essential and heating of the sampled air often required.

Exception: Wet cap type of collectors have too short a contact time to bring gas stream close to saturated conditions. Sampling after the collector will be questionable value unless gases are gathered in a discharge stack of several diameter lengths.

In recognition of these differences in purpose and location for testing emissions the following procedure is divided into three sections.

Section I deals exclusively with sampling raw particulate emissions in the cupola stack.

Section II deals exclusively with sampling raw particulate emissions in the inlet duct connecting the cupola to the dust collector.

Section III deals exclusively with sampling cupola gases after they have been cleaned.

REASONS FOR SAMPLING A CUPOLA

Basically sampling is done for three reasons:

1) to determine if a collecting device is of a high enough efficiency so that its effluent does not exceed a predetermined level.
2) to meet regulatory requirements that specify a minimum efficiency of removal of particulate from the gas stream, expressed as a percentage of uncontrolled emission.
3) to obtain information regarding particulate emission which will be used for designing gas cleaning devices.

Officials of local, regional or state regulatory bodies should be consulted prior to testing except when the testing is being done for purely informational data for the cupola owner or operator.

If source testing is being done to determine compliance with legal requirements the appropriate control officials should be consulted. If the control body has experience and is equipped to perform cupola testing, they may wish to perform their own tests to determine compliance.

Generally control bodies will not accept the results of tests performed by the owners, operators or vendors of collection devices unless standard procedures were followed and test data and reports show evidence that experienced personnel conducted the tests.

In most cases it will be necessary for the owner or operator of a cupola to employ the services of an organization capable of performing these tests. When this is done the control authorities should have given prior approval of the testing organizations capabilities and acceptability of their test results. In any event, it is advisable to notify the proper authorities in advance so that they may have on site observers present if they so desire.

The foundryman should select a testing organization with proven capability, a good reputation and in whom he has complete confidence. As test data can have major economic consequences and as the foundryman usually cannot check the quality of the testing procedures confidence in the organization is a prerequisite.

The next step is consultation with the appropriate control authorities. The foundryman along with the testing organization must involve themselves in this because regulations are sometimes not easily understood, and frequently interpretation is modified by political and community attitudes. Authorities will be aware of changes in enforcement policies, or pending changes in legislation, and the foundryman cannot expect outside testing organizations to be cognizant of these considerations.

The number and type of tests to be taken must be agreed on in advance by all parties concerned. Frequently, meeting the specifications of the pertinent code dictate the number and kind of samples to be run. At other times the purchase agreement between vendor and foundryman specifies testing methods. If discretion can be used the use of several short tests is recommended over one longer one. When several results can be compared, any large differences are evident. If these differences are not as a result of operational changes or adjustments they may indicate error in the test procedure or malfunction of the test equipment. One test of long duration gives only one answer with no basis

for comparison. Accuracy and precision of testing is controlled as much by the care exercised and quality of the testing personnel as it is by the test procedure.

Errors in each manipulation such as weighing, measuring gas volume, and calculating results must not exceed 1 percent and should be kept under that if possible. In this way cumulative errors can be held to little more than 1 percent.

CUPOLA OPERATING AND TEST CONDITIONS

Due to the various possible modes of operation of cupolas and cupola systems, it is recommended that cupola emissions be evaluated under conditions that characterize normal or average cupola operations at any particular plant.

Particulate matter emitted via raw cupola stack gases consists principally of iron oxides and silica from the charge metal and impurities adhering to the charge metal plus combustible matter. Secondary combustion in the upper portion of a cupola stack will tend to reduce the combustible portion of the particulate emissions to ash if temperature and retention time are sufficient.

Cupola stack gas will also contain some vapor from substances which reaches the melting zone and is volatilized. These substances include silicon, zinc and silica (sand). The degree of volatilization will depend on melting zone temperature which is influenced by changes in the fuel (coke and/or gas) ratio, preheating of the blast air or scrap and enrichment of the blast air with oxygen. Consequently, it is of utmost importance that the factors affecting melt zone temperature be normal before testing begins. Equally as important, materials that can cause fuming, such as galvanized iron, sand, and silicon, for example, be added in normal amounts during the test period. Changes from normal melt process can result in emissions which are markedly better or worse than will be obtained during everyday operation. Either result will be unsatisfactory.

The particulate matter emanating from a cupola has a wide range of particle size distribution which influences the correct choice of stack testing method. For many cupolas, peaks in particle sizes can be found on distribution curves at three ranges. These are in the 200 to 500 micron range, the 20 to 50 micron range and the 5 micron and below range.

Many factors influence the particulate emission rates of a cupola system. These include the rate of cupola operation, the character, cleanliness and method of introduction of the charge material, the type, size and amount of the coke used, the frequency, length of time and number of periods when tuyere blast air is operative or inoperative during any period, the type of metal being melted, the method and type of alloy introduction, and other diverse factors.

It is necessary, therefore, that each cupola and cupola system be individually analyzed to determine conditions under which stack or source emission tests are needed to define the full range and character of its emissions.

One of the factors having a most profound effect in cupola emissions is the rate of cupola melting; as cupola blast air and coke input is increased to accommodate higher melting rates, cupola emissions increase significantly. It is important, therefore, that cupola source-emission tests be conducted at melting rates approaching the normal expected rate of cupola operation if the results are expected to characterize emissions for the system. Often times it is not practical to operate at maximum melting rates since melting rates must reflect current production and pouring schedules. It should be appreciated, however, that cupola charging and melting rates have a profound influence on cupola emissions.

If for any reason tests during either start-up or burn down periods are made such tests should be kept and evaluated separately from each other as well as all others.

If various metals are produced at various times from the same cupola (such as gray and cutile iron) it is desirable that the emissions be evaluated for each type produced if there is a difference in melting conditions. The melting conditions that would tend to require evaluation in terms of differences in emissions would be reflected by variations in blast air rates, coke rates and charge metal characteristics.

Prior to any field test period the testing firm should be consulted for recommendations as to the number of days and number of test runs to be conducted to define the full range of cupola emissions consistent with cupola operating practices and other pertinent considerations. It is important that the plant's full range of operations be evaluated consistent with the stated objectives of the emission test program.

OBTAINING MEANINGFUL TEST DATA

For short run jobbing cupolas, it is recommended that a minimum of three dustloading test determinations be conducted of cupola emissions as part of any emission study. A volumetric determination should be conducted for each of the three test periods. To make the emission data be the most meaningful it is necessary and desirable that detailed records be kept of cupola operating conditions concurrent with the emission studies.

The emission test program can usually be conducted in one to three days of field sampling by an experienced testing organization. The following minimum information is considered necessary in establishing and fixing cupola operating conditions. It is necessary that these cupola operating data be secured concurrently with stack emission studies:

1) Nature, weight and constituents of all cupola charges.

2) Number and time of all cupola charges made on the test date(s).

3) Cupola blast air record showing volume changes during test. Verify that records indicate volume introduced but not quantities diverted as a means of throttling.

4) Presence of, type, number, capacity and location of afterburners.

5) Existence of gas ignition in the stack.

Ample precedents exist for evaluating the emission performance of only one cupola in a bank of two cupolas that are operated on alternate days. This situation is particularly valid if both cupolas are of the same size, oerate from the same tuyere blast air supply, are used in the production of similar types of iron and are operated at the same approximate rates.

If there are marked variations or changes in the operation of a 2-bank cupola system, particularly with respect to the factors outlined above, it is recommended that each cupola be evaluated individually for its emission potential. The design of a single emission control system serving a dual bank of cupolas must be predicated on achieving conformance with regulations for the most severe conditions of cupola operation during the normal production part of the melt cycle. For the larger job-shop cupola-operators and for the production foundry it is recommended that a minimum of two days field testing of cupola emissions be conducted. This type of test program will permit the operation and evaluation of both cupolas in a two unit bank.

The cupolas themselves should be operated at normal melting rates during the test period. Test dates should be selected when foundry pouring schedules will permit normal operation.

It is not necessary to obtain a gas analysis to determine gas density from the cupola because the difference in weight between air and the combustion gases is insignificant for exhaust volume calculation purposes.

SAMPLING PROCEDURES AND EQUIPMENT

A major problem in sampling and analysis is that high accuracy and precision must be obtained in a working foundry, where conditions are not conducive to laboratory-type manipulations. To achieve effective installation and operation of a sampling train in a foundry requires someone who is not overly worried with minute detail. On the other hand, when the critical analytical measurements and manipulations are made, the greatest attention to cleanliness, accuracy, and detail is required.

The sampling equipment required for this work must fit the same pattern. It must be simple, rugged, and yet capable of high accuracy. In general, it must be highly portable. Reliable equipment is available from several vendors, and all qualified testing groups have their own.

a. Filtering Media

A good filtering medium is a prerequisite to accurate sampling. Efficiency of collection must be at least 99 percent for all particulates encountered. An ideal filter medium should be very light so that accurate weight differences can be obtained from small samples. The filter should also be strong and resistant to both heat and moisture.

No medium available has all these properties so a compromise must be made. Readily available media and some of their characteristics are listed below. Reliable suppliers will give the characteristics of their products on demand.

FILTER PAPER

Conventional filter paper, made from cellulose, comes in hundreds of grades; most of them are not suited to fine particulate filtration, but some are specially designed for

this service. They have good mechanical strength, good resistance to moisture, and reasonable heat resistance. Conventional paper must be dried and desiccated before each weighing, and must weighed on a balance from which moisture can be excluded. Ideally the paper should be allowed to reach equilibrium in a constant-humidity room, and should be weighed there.

GLASS FIBER FILTER PAPER

Glass fiber filter paper will withstand higher temperature than conventional paper, but it should be remembered that a plastic binder is used in the manufacture of most of this paper and that the binder lowers temperature resistance. Some paper is made without binder and this is much more resistant to temperature. However, this material lacks mechanical strength, and the unbonded variety is particularly weak. Glass fiber filter paper has the great advantage that it is not sensitive to humidity and so can be used where a dessicator is not available.

THIMBLES

The Soxhlet thimble has been used widely in the past. The thimbles are made of two materials, paper and ceramics. The paper thimbles have the same strengths and weaknesses as ordinary paper, and the same precautions apply. The ceramic ones come in a variety of porosities. If the pores are small enough for this work, rates of filtration will be extremely small. In addition, ceramic thimbles are very heavy so that large samples must be weighed to obtain accuracy. Thimbles of any type are not recommended for this work.

A variety of cloth materials are used for filtering particulates. Usually efficient filtration results only after a coating of particulate has been built upon the cloth. This buildup occurs most rapidly when the sampled gases contain large amounts of particulate, hence sampling error is minimized.

When particulate loading is low, such as when sampling cleaned gas, significant error can be introduced unless the fabric is 99 percent efficient on the first material that deposits.

b. Weighing

The first steps in sampling is weighing the filter paper, or other medium. Each paper should be marked with a number before weighing. The common practice of writing the weight on the paper after it has been obtained creates an error equal to the weight of the ink used. Much larger errors can result from the handling required to write on the paper. Lastly, and most importantly, the practice is poor technique, and, if allowed, will encourage other slovenly practices. The atmosphere in an ordinary analytical balance can be dried to some extent if a small beaker of concentrated sulfuric acid or container of silica gel is placed inside and the doors are kept closed.

If filter papers are weighed on one balance initially, and on a second when loaded, the second balance should be checked for consistency with the first. This can best be done by checking the weight of pre-weighed paper, and

applying a correction if required. Accuracy on the total weight is not vital, but the difference between initial and final weights, which represents the weight of the sample, is critical.

c. Flow Measuring

Volume flow rate measuring devices must be preceded by system components to minimize the surging or pulsating effects normal in cupola operation and sampling. The use of flow rate measuring devices in testing effluents from a dynamic system, such as a cupola, requires that frequent readings be taken (2 or 3 minutes reading cycle should be the maximum time period between readings) and that all readings must be conducted on a stopwatch timed basis.

It is recommended that sampling volume flow rate measurements be taken using two different flow measuring mechanisms in any high volume sampling train. The average of the two sampling volume rate measurements and computed sampling volumes should then be used in the subsequent dustloading calculations.

d. Flushing the Sampling Train

At the end of each dustloading test run it is imperative that the sampling train (nozzle, connecting tube or hose and sampler) be thoroughly cleaned and flushed. Distilled water should be used and introduced into the nozzle at high velocities to aid in scrubbing the sampling train.

The particulates flushed from the sampling train should be handled, weighed and separately determined. Significant quantities of particulates are deposited in any sampling train, so it is important that this material be included with the

sampled catch when computing the dustloading test results.

e. Velocity-Volumetric Tests

An S-type pitot tube is preferred to a regular pitot tube because it is not as prone to plugging. Stainless steel, Iconel or other high temperature resistant material should be used in the pitot tube construction. A ruggedly constructed inclined draft gage is recommended for use in the velocity and dustloading tests. The pitot tube should be checked and calibrated according to the manufacturers recommendations at regular intervals to establish the proper correction factor to be used in the volumetric calculations.

f. Sampling Trains and Sampling Equipment

Few emission sources offer the trying field test conditions attendant to sampling as do cupola systems. The need also cannot be emphasized enough for rugged field sampling equipment for this testing. A schematic diagram of sampling apparatus for the static balanced tube method of sampling, incorporating recommendations for cupola effluent source emission sampling is presented in Fig. 1.

A possible commercial source for various components of the sampling train is indicated in Table 2. This is not to be construed as an endorsement of any particular manufacturer but is illustrative only of the rugged type of test equipment recommended for cupola source sampling.

When assembling sampling equipment, joint sealing materials should not be exposed to the sampled gas stream where adherence of the particulate could occur. Long-radius bends should be used

instead of elbows to facilitate cleaning. The probe should be just long enough for the task at hand. The rest of the train should be assembled and tested for leaks. If the meter is a dry gas meter, it is to be calibrated before each use. If an orifice meter, or flow-meter type, is used it must also be calibrated each time, and it must, in addition, have enough sensitivity so that readings can be read to less than 1 percent. Finally, if volume is obtained by multiplying an instantaneous reading by the time of operation, fluctuations must be kept to 1 percent.

The vacuum pump or compound air ejector must be the last element of the sampling train unless it can be proved that there is no leakage through the packing, etc., under the worst conditions that can be visualized.

g. Analysis of Captured Particulate

It is recommended that the procedure for weighing and determining size distribution of the captured particulate be used as stated in the ASME PTC 27-1957 Section 4 Paragraphs 75-79 (see Appendix).

Fine particulate matter should be sized and analyzed within 24 hours after the sample is taken to minimize agglomeration and a possible change in character. It is most desirable if the sample is dried immediately after the test has been run to prevent degradation.

The minus 44 micron fraction of the collected particulate must be carefully handled and analyzed because of the strong tendency to agglomerate.

SECTION I - SAMPLING RAW PARTICULATE EMISSIONS IN THE CUPOLA STACK

Recommended Test Method and Procedures

A thorough and complete review of the available test methods and procedures used in the conduct of source emission studies has resulted in the recommendation of the following basic requirements as essential to an acceptable evaluation of the test methods:

1) In order to obtain a truly representative sample of coarse particulates from the gas stream a large volume sampling train should be used. The sampling nozzle should be constructed of stainless steel having a minimum inside diameter of 3/4 inches, since raw cupola emissions cover a broad range of particle sizes, with individual particles not uncommonly ranging up to 3/8 inch diameter or larger.
2) Particulate matter is defined consistent with the definition accepted by the dust collection industry and as adopted in the American Society of Mechanical Engineers Performance Test Code 21-1941, Dust Separating Apparatus and Performance Test Code 27-1957, Determining the Dust Concentration in a Gas Stream. See item 1 in the Appendix. In essence, this defines particulate matter as all filterable solids present at standard temperature in an effluent gas stream.
3) It is necessary that a truly "isokinetic" sample of gases and solids be secured by the sampling system. This requirement is a practical consideration dictated by the wide range of

particle sizes involved and, therefore, the special need for securing a truly isokinetic sample of the effluent solids.

4) When sampling in the cupola stack, water-cooled corrosion-resistant, sampling probes and sampling nozzles are required. This is a practical requirement since cupola temperatures in excess of 1200°F are common, and sample contamination by corrosion products formed in the nozzles and probes of the sampling system must be prevented. Water-cooling also serves to preserve the sampling probes from deterioration and distortion.

5) The American Society of Mechanical Engineers Performance Test Code 27-1957, Determining Dust Concentration in a Gas Stream, with modifications as outlined below offers the best and most practical test method and test procedures for the conduct of source emission studies from cupolas. The following are additional important considerations in the sampling of cupolas and cupola systems when utilizing as a broad base the test procedures and techniques embodied in ASME PTC 27-1957, Determining Dust Concentration in a Gas Stream. See item 2 in the Appendix. The criteria supplement the methods and procedures contained in ASME PTC 27, when applied to cupola source emission testing:

a. Test Location and Test Openings

A test location in a cupola stack must at best be a compromise. The location should be as far above the top of the charge door opening as practical but be at least one equivalent cupola inside daimeter below the top of the cupola stack. This location will require that protective shelter be provided since test personnel and equipment may be subjected to possible fallout of particles.

Test ports should consist of two six inch pipe nipples (schedule 40) installed radially in the cupola shell and cupola lining at 90 degrees to each other. Both 90 degree test ports must be accessible from the sheltered test platform. Six-in test ports are usually required to accommodate high volume sampling nozzles. An acceptable test platform can usually be constructed using temporary steel scaffolding. Corrugated metal sheeting can be used for the roof of the test platform. The six-inch pipe nipple test ports should protrude out a few inches from the cupola shell and should be flush with the inside of the cupola lining. The test port nipples should be fillet-welded to the cupola shell. The threads of the pipe nipples should be graphited and six-inch pipe caps installed hand tight so that they can be readily removed during the test period.

b. Method of Subdividing Cupola Stack

The cupola stack cross-sectional area should be measured at the test elevation. Due to refractory erosion and/or the

buildup of slagged deposits which affect the cupola cross section, it is important that the cupola cross section and cross sectional area be determined at the test elevation. The ASME PTC 27 test code prescribed procedure (see item 2 in Appendix) should be followed in determining the location of the test points to be used in both the volumetric or pitot tube traverses and during the test runs.

A minimum of 12 points should be used as sampling locations in traversing a cupola stack in the dustloading test runs. Additional sampling points should be used when the maximum to minimum velocity variation in the velocity profile approaches, or exceeds, a 2 to 1 figure.

It is important that dust sampling be conducted at each test point and that the dustloading test-data sheet reflects the sampling conditions at each test point in traverse of the cupola from each test port. The practice of using a much smaller number of test points during the dustloading test runs, as compared to a large number of points used in the velocity checks, is almost certain to bias the test results and cause the results to be of a questionable nature with respect to securing a representative cupola sample.

c. Number and Duration of Test Runs

Test runs shall consist of a minimum of 60 minutes actual dust sampling. Based upon a minimum of 12 points of dust sampling of the cupola cross section from the two 90

degree test ports, an acceptable minimum sampling schedule would consist of sampling for 5 minutes at each of the 12 points. The field test data sheets and the test report must clearly reflect the location and the time of sampling at each of the sampling points used. A minimum of three sets of flow, temperature and pressure readings should be taken at each sampling point. The field data shall be logged and should reflect the dynamic conditions of cupola flows and sampling rates at each test point.

Readings of sampling flow rates, temperatures, pressures, gas analyses and other pertinent test data which are part of each dustloading test run should be taken on a 2 (maximum 3) minute cycle at each sampling point during each dustloading test run. The total sampling program should be conducted under stopwatch timing precision.

Three dustloading test runs and 3 velocity-volumetric test runs should be conducted in a single day of field sampling, as previously mentioned.

d. Sampling Probes

Sampling probes used in the dustloading test runs of raw gas should be of water-cooled, stainless steel construction. The sampling probes should be a minimum of 3/4 inch inside diameter, and preferably of larger inside diameter for tests conducted on raw gas emissions. Conventional smaller diameter test probes are suitable for use on the downstream side of dust collectors, but should not be used in raw gas sampling.

Either a standard or null type probe may be used for sampling raw cupola gases. Whichever probe is employed, a truly isokinetic sample must be taken at all test points during all test runs.

A null sampling probe of either the balanced static pressure type or balanced impact pressure type can be used. Null type probes are prone to introduce minimum error as their diameters increase and as the velocity of the flow system increases.

A null sampling probe must be calibrated and of such a size as to give the minimum sampling error (deviation from isokinetic) for the expected sampling velocity range.

Either type probe presents certain shortcomings which must be compensated for under the adverse, dynamic and widely varying flow conditions attendant to normal cupola operation.

Cupola velocities can be expected to range from 600 to 2400 ft/min. depending upon the size of the cupola and the rate of cupola operation. Normal operating velocity ranges can be expected to be 1000 to 1800 ft/min.

Fixed rate sampling trains, based upon an occasional velocity determination made at some fixed time, are unacceptable for cupola source sampling since such methods completely ignore the dynamic nature of the cupola melting process.

e. Filter Media

Due to the need for a large diameter sample probe and the necessity of isokinetically sampling the gas stream, a high volume sampling train is mandatory. The filtering media used for removing particulate from the gas stream must be of

sufficient size to maintain the sampling rates necessary without imposing undue pressure drop restrictions on the sampling train.

The advantages and disadvantages of some of the various filtering media that can be used in removing the particulates from the sampled gas stream are stated in ASME PTC 27 Section 4 Paragraph 59 (See Appendix).

FOOTNOTE: Cloth is often used as the filtering media because of its high collection efficiency, good flow permeability, ability to be shaped or adapted to any sampler configuration, and freedom from plugging or excessive pressure buildup under minimum condensation conditions.

In the event that a cotton sateen fabric is selected it must be thoroughly washed and rinsed prior to use to be free of starch and sizing materials. This filter medium has as its most serious limitation a humidity or moisture pickup tendency. This problem can be adequately dealt with by proper and skilled weighing and handling techniques using an enclosed single pan desiccated analytical balance.

Sampler units housing the filter medium should be made or lined with corrosion resistant material and must permit ready and free insertion and removal of the filter medium. Sampler units must consist of airtight enclosures to ensure that all sampled gases pass through the filter medium, be capable of easy field cleaning and of conserving the sampled dusts with a minimum of sample loss in filter handling.

To facilitate transfer of collected material and prevent the possibility of incandescent particles from contacting the final filter medium it may be desirable to incorporate a small stainless steel cyclonic collector ahead of the ultimate filter medium. Such cyclones tend to remove the larger particulates and prolong the sampling period before the pressure buildup on the filter medium restricts isokinetic sampling, due to reduced sampling flow rate capability.

Such cyclones offer the additional advantage of providing a convenient method of measuring the gas sampling flow rate. This can be accomplished by calibrating the pressure drop across the cyclone collector unit entailing the measurement of the pressure differential across the cyclone, the temperature and the static pressure at that location.

FOOTNOTE: Scrubber (impinger) or condensing systems are considered unsatisfactory for particulate filtration in cupola sampling trains. Such systems promote and cause the formation of reaction products which were not present in the cupola gas stream. Since most available impinger or wet collecting apparatus, are associated with low volume sampling rates (not to exceed 1.0 cfm), it can be seen that they do not lend themselves well to high volume rate sampling without the use of multiple, parallel units.

While it may be of interest in some instances to determine if condensible material is present in cupola effluents such determinations are beyond the scope of this recommended practice for particulate.

When a gas analysis is desired it is recommended that a continuous carbon dioxide and/or a continuous oxygen analyzer be used to measure these gas constituents. Periodic checks can also be made using an Orsat gas analyzer to verify the performance of the continuous gas analyzer or to check on the total gas composition (CO_2, O_2, CO, N_2). The continuous gas analyzer should be read on a two or three minute cycle throughout each test run and the time noted. Results of each Orsat gas analysis conducted should be clearly indicated on the field data sheets and in the test report.

Sulfur oxide emissions from cupola systems are of such a low order that it is usually unnecessary to measure them in light of present day standards.

f. Sampling Volume Flow Rate

The need for a high volume sampling system to secure representative samples from cupola raw gas effluents often mitigates against the use of an integrating gas meter for measuring the sample gas volume although such are available to handle the flow ranges covered by 3/4 to 2 inch inside diameter dust sampling nozzles. However, portability requirements for such meters leave much to be desired and adverse field conditions in cupola sampling often preclude the use of such meters.

Sampling volume flow rate measurements can be made by flowrator systems, calibrated pressure drop mechanisms such as orifices, venturis or other similar flow measuring devices.

SECTION II - RAW GAS TEST LOCATION IN DUCT AHEAD OF COLLECTOR

Tests are often conducted to determine performance of collectors installed for cupola gas cleaning. Often a sample location in the connecting duct will have advantages over that of a cupola stack location because -

1. Gases will be cooled, usually by evaporation of water, to temperatures below 500°F.
2. Location more accessible.
3. Dustloadings and gas velocity more uniform thru cross section of sampling area.

   (Duct velocities usually in teh 3000 - 5000 fpm range.)

   In such locations:

   a. Number of sample points can correspond to ASME PTC 27 and need not be the minimum of 12 recommended for the cupola stack.
   b. Gas volume will include substantial proportion of water vapor and influence gas density.
   c. Some dust, especially of the coarser fractions, can bypass the sample area if there is substantial run-off of cooling water or for dust fallout in cooling towers, external combustion chambers, etc.

Whenever possible, catch from collector should be obtained and checked against calculated collected quantity from inlet and outlet samples. It is often difficult to get a sample covering only the test period, but often feasible to obtain quantity collected during a complete melting cycle. In the latter case, daily average data can be compared to short test runs of the sampling equipment.

Comparison of coarse fraction in the catch with the quantities reported by sampling will also give an indication of effectiveness of the sampling technique of such fractions. When indicated, catch from the collector needs to be

augmented by inclusion of fallout in preceding system elements as noted in Item c.

SECTION III - SAMPLING CLEANED CUPOLA GASES

General

Sampling behind a gas cleaner alleviates some of the problems experienced when sampling raw cupola gases. Extremely large particles are no longer present permitting the use of conventional 1/4" or 3/8" diameter sampling probes and lower sampling volumes. The violent velocity fluctuations experienced in a cupola stack have been moderated; and the high temperatures of raw cupola gases have been reduced. On the other hand, a different problem is accentuated. Gas cleaning equipment is expensive, and is usually sold to meet a specified emission standard. Since performance curves for emissions become asymptotic, small changes in performance can cause large expenditures in equipment alteration, therefore accuracy of testing becomes more critical.

Because the gas sampled is hot and humid, the probe or filter holder must be heated to stop condensation on the walls of the apparatus from occuring. Such condensate will interfere with the filtration of particulate.

Cupola off-gases are almost always cooled by direct contact with water, so it can be a-sumed that they are humid after they have passed through a cleaning device, whether a wet scrubber or not. Consequently, a condenser must be inserted in the filtering train. This serves two purposes. First, it removes excess water which may condense and damage the gas meter. Secondly, and of vital importance, a condenser gives assurance that the gas passing through the train is saturated at an identifiable point. This provides the basis for exact calculation of the volume of dry gas metered, converted to standard conditions.

An acceptable procedure for testing is "Determining Dust Concentration in a Gas Stream", PTC 27-1957, published by the American Society of Mechanical Engineers.

While isokinetic sampling is not as critical for cleaned gases because of the small particle sizes involved, its use is recommended, following the same procedure of test locations, sample time, pitot traverse and data log recommended in Section I and II.

FIGURE 1

SCHEMATIC DIAGRAM OF SAMPLING APPARATUS

STATIC BALANCED TUBE METHOD OF SAMPLING

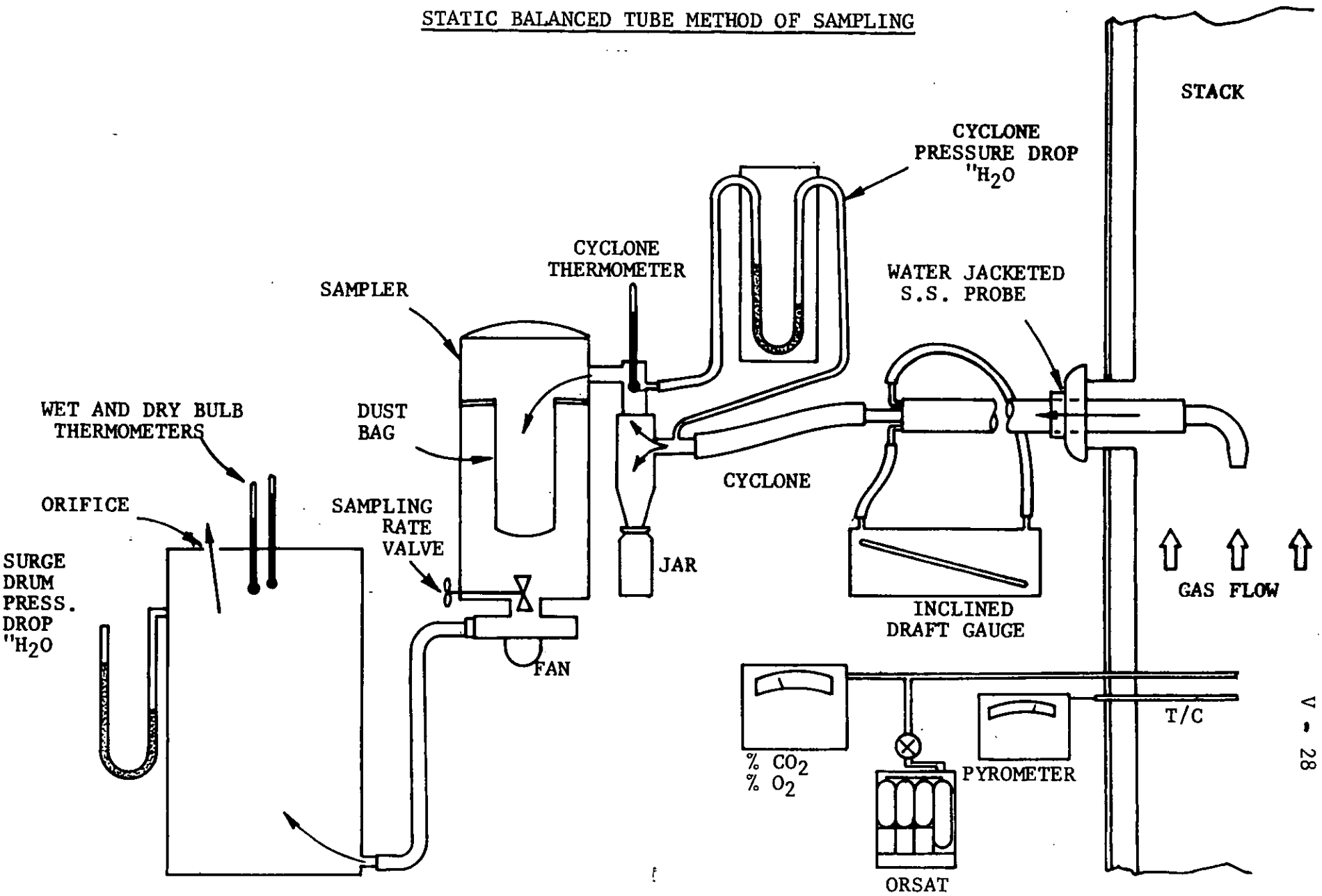

TABLE 2 - REPRESENTATIVE SOURCES OF COMMERCIALLY MANUFACTURED COMPONENTS

	Component	Source
1.	Stainless steel, water-cooled static balanced, tube sampling nozzle-3/4 in. minimum ID.	Individually designed and constructed to meet nozzle diameter and probe length needs. Fitted with 6 in. pipe cap and pipe sleeve. Nozzles are to be calibrated to effect isokinetic sampling with minimum sampling error at the optimum velocity range for each different probe diameter. An acceptable nozzlehead design is schematically illustrated in ASME PTC 27 (Fig. 2).
2.	Inclined draft gage and holder, pitot tube.	Industrial Engineering Instrument Co., Allentown, Pennsylvania
3.	Stainless steel cyclone	UOP Air Corrections Division Darien, Connecticut
4.	Sampler	Fabricate to meet filter media confinement and handling requirements.
5.	Manometer	The Meriam Instrument Co., Cleveland, Ohio
6.	Thermometer	Weston Electrical Instrument Corp., Newark, New Jersey
7.	Industrial exhauster	Clements Manufacturing Co., Chicago, Illinois
8.	Continuous gas analyzer	Thermco Instrument Corp., LaPorte, Indiana
9.	Orsat gas analyzer	Hayes Corp., Michigan City, Indiana
10.	Pyrometer and thermocouple	Alnor Instrument Co., Division Ill. Testing Laboratories, Inc. Chicago, Illinois

VI - GLOSSARY OF TERMS

ACFM -	Actual cubic feet per minute; refers to the volume of gas at the prevailing temperature and pressure.
Acid Lining -	A refractory furnace lining essentially of silica.
Additive -	A substance added to another in relatively small amounts to impart or improve desirable qualities, or suppress undesirable qualities. As additives to molding sand, for example, cereal, sea coal, etc.
Aerosol -	Small particles, liquid or solid, suspended in the air. The diameters vary from 100 microns down to 0.01 microns or less; for example, dust, fog, smoke.
Afterburner -	A device for burning combustible materials that were not oxidized in an initial burning process.
Agglomeration -	Gathering together of small particles into larger particles.
Air Cleaner -	A device designed for the purpose of removing atmospheric airborne impurities such as dusts, gases, vapors, fumes and smokes.
Air Filter -	Any method used to remove gases and particulates from the environment and stack emission; it may be of cloth, fibers, liquid spray, electrostatic, etc.
Air Furnace -	A reverberatory-type furnace in which metal is melted by heat from fuel burning at one end of the hearth, passing over the bath toward the stack at the other end.
Air Pollution -	The presence in the outdoor atmosphere of one or more air contaminants or combinations thereof in such quantities and of such duration that they are or may tend to be injurious to human, plant or animal life, or property, or that interfere with the comfortable enjoyment of life or property or the conduct of business.
Anneal -	A heat treatment which usually involves a slow cooling for the purpose of altering mechanical or physical properties of the metal, particularly to reduce hardness.

Baghouse -	A large chamber for holding bags used in the filtration of gases from a furnace to recover metal oxides and other solids suspended in the gases. It's a form of dust collector and the bags may be constructed of natural, synthetic, or glass fibers.
Baked Core -	A core which has been heated through sufficient time and temperature to produce the desired physical properties attainable from its oxidizing or thermal setting binders.
Balanced Blast -	Arrangement of tuyeres in a cupola which provides for distributing or balancing the blast as required between upper and lower levels of the melting zone.
Basic Lining -	In a melting furnace, the inner lining and bottom composed of materials that have a basic reaction in the melting process, usually either crushed burned dolomite, magnesite, magnesite bricks or basic slag.
Bed -	Initial charge of fuel in a cupola upon which the melting is started.
Blast -	Air driven into the cupola furnace for combustion of fuel.
Blast Volume -	The volume of air introduced into the cupola for the burning of fuel. This volume governs the melting rate of the cupola and approximately 30,000 cubic feet of air is required per ton of metal melted.
Briquette -	Compact cylindrical or other shaped block formed of finely divided materials by incorporation of a binder, by pressure, or both. Materials may be ferroalloys, metal borings or chips, silicon carbide, coke breeze, etc.
Burden -	A collective term of the component parts of the metal charge for a cupola melt.
Burned Sand -	Sand in which the binder or bond has been removed or impaired by contact with molten metal.
Canopy Hood -	A metal hood over a furnace for collecting gases being exhausted into the atmosphere surrounding the furnace.

Cantilever Hood -	A counterbalanced hood over a furnace that can be folded out of the way for charging and pouring the furnace.
Cast Iron -	Essentially an alloy of iron, carbon and silicon in which the carbon is present in excess of the amount which can be retained in solid solution in austenite at the eutectic temperature.
Catalytic Combustion -	A device for burning combustible gases, vapors, aerosols and odorous substances, reducing them to water vapor and carbon dioxide.
Centrifuging -	A method of casting, employing a core and depending on centrifugal force to make the metal more dense and strong in the outer portion of the casting. The mold cavities are usually spaced symmetrically about a central sprue, and the whole assembly is rotated about that axis during pouring and solidification.
Cereal Binder -	A binder used in core mixtures and molding sands, derived principally from corn flour.
Charge -	The total ore, ingot, metal, pig iron, scrap, limestone, etc. introduced into a melting furnace for the production of a single heat.
Charging Door -	An opening in the cupola or furnace through which the charges are introduced.
Coke -	A porous gray infusible product resulting from the dry distillation of bituminous coal, which is used as a fuel in cupola melting.
Coke Breeze -	These are fines from coke screenings.
Convection -	The motion resulting in a fluid from the differences in density and the action of gravity due to temperature differences in one part of the fluid and another. The motion of the fluid results in a transfer of heat from one part to the other.
Cope -	The upper or topmost section of a flask, mold, or pattern.
Core -	A separate part of the mold which forms cavities and openings in castings which are not possible with a pattern alone. Cores are usually made of a different sand from that used in the mold and are generally baked or set by a combination of resins.

Core Binder -	Any material used to hold the grains of core sand together.
Core Blower -	A machine for making cores by blowing sand into the core box by means of compressed air.
Core Oven -	Specially heated chambers for the drying of cores at low temperatures.
Core Sand -	Sand for making cores to which a binding material has been added to obtain good cohesion and porosity after drying.
Crucible -	A vessel or pot made of a refractory such as graphite or silicon carbide with a high melting point and used for melting metals.
Cupola -	A cylindrical straight shaft furnace usually lined with refractories, for melting metal in direct contact with coke by forcing air under pressure through openings near its base.
Cupola, Hot Blast -	A cupola supplied with a preheated air blast.
Cupola Stack -	The overall top column of the cupola from the charging floor to the spark arrestor.
Cyclone - (centrifugal collector)	A device with a control descending vortex created to spiral objectionable gases and dusts to the bottom of a collector cone for the purpose of collecting particulate matter from process gases.
Cyclonic Scrubber -	Radial liquid (usually water) sprays introduced into cyclones to facilitate collection of particulates.
Density -	Ratio of the weight of gas to the volume, normally expressed as pounds per cubic foot.
Desulfurizing -	The removal of sulfur from molten metal by the addition of suitable compounds.
Direct Arc Furnace -	An electric arc furnace in which the metal being melted is one of the poles.
Drag -	The lower or bottom section of the mold, flask or pattern.

Ductile Iron - Iron of a normally gray cast type that has been suitably treated with a nodularizing agent so that all or the major portion of its graphitic carbon has a nodular or spherulitic form as cast.

Duplexing - A method of producing molten metal of desired analysis. The metal being melted in one furnace and refined in a second.

Dust - Small solid particles created by the breaking up of larger particles by processes such as crushing, grinding, drilling, explosion, etc.

Dust Collector - An air cleaning device to remove heavy particulate loadings from exhaust systems before discharge to outdoors.

Dust Loading - The concentration of dust in the gas entering or leaving the collector, usually expressed as pounds of particulate per 1,000 pounds of dry gas or grains per standard cubic foot.

Efficiency - With regard to dust collectors, it is the ratio of the weight of dust trapped in the collector to the weight of dust entering the collector. This is expressed as a percent.

Effluent - The discharge entering the atmosphere from the process.

Electrostatic Precipitator- A dust collector utilizing a high voltage electrostatic field formed by negative and positive electrodes; the positive, uncharged electrode attracts and collects the gas-borne particles.

Elutriation - The sizing or classifying of particulate matter by suspension in a fluid (liquid or gas), the larger particulates tending to separate by sinking.

Emission - The total pollutants emitted into the atmosphere usually expressed as weight per unit of time such as pounds per hour.

Endothermic Reaction - Designating, or pertaining to a reaction which occurs with the absorption of heat from the surroundings.

Equivalent Opacity - The determination of smoke density by comparing the apparent density of smoke as it issues from a stack with a Ringelmann chart. In effect, it is a measure of the light obscurity capacity of the plume.

Exothermic Reaction -	Chemical reactions involving the liberation of heat; such as burning of fuel and deoxidizing of iron with aluminum.
Fabric Filter -	A dust collector using filters made of synthetic, natural or glass fibers within a baghouse for removing solid particulate matter from the air or gas stream.
Facing Sand -	Specially prepared molding sand mixture used in the mold adjacent to the pattern to produce a smooth casting surface.
Fines -	A term the exact meaning of which varies. 1. Those sand grains that are substantially smaller than the predominating grain size. 2. That portion of sieved material that passes through the mesh.
Flask -	Metal or wood frame without top or without fixed bottom used to retain the sand in which a mold is formed; usually consists of two parts, cope and drag.
Flux -	Material or mixture of materials which causes other compounds with which it comes in contact to fuse at a temperature lower than their normal fusion temperature.
Fly Ash -	A finely divided siliceous material, usually oxides, formed as a product of combustion of coke. A common effluent from the cupola.
Forehearth -	Brick lined reservoir in front of and connected to the cupola or other melting furnaces for receiving and holding the melted metal.
Foundry Effluent -	Waste material in water or air that is discharged from a foundry.
Fourth Hole Ventilation - (Direct Tap)	In air pollution control, using a fourth hole in the roof of an electric furnace to exhaust fumes.
Fume -	A term applied to fine solid particles dispersed in air or gases and formed by condensation, sublimation, or chemical reaction.

Gas -	Formless fluids which tend to occupy entire space uniformly at ordinary temperatures and pressures.
Gate -	The portion of the runner in a mold through which molten metal enters the mold cavity.
Gray Iron -	Cast iron which contains a relatively large percentage of its carbon in the form of graphite and substantially all of the remainder of the carbon in the form of eutectoid carbide.
Green Sand -	A naturally bonded sand or a compounded molding sand mixture which has been tempered with water and additives for use while still in a damp or wet condition.
Griffin System -	A method operating in two stages, to recoup and preheat air by using the latent heat of cupola gases.
Heat Balance -	A determination of the sources of heat input and the subsequent flow of heat usually expressed in equation form so that heat input equals heat output.
Heat Treatment -	A combination of heating and cleaning operations timed and applied to a metal or alloy in the solid state in a manner which will produce desired properties.
Heel -	Metal left in ladle after pouring has been completed. Metal kept in induction furnaces during standby periods.
Holding Furnace -	A furnace for maintaining molten metal, from a larger melting furnace, at the proper casting temperature.
Hood -	Projecting cover above a furnace or other equipment for purpose of collecting smoke, fume or dust.
Hot Blast -	Blast which has been heated prior to entering into the combustion reaction of a cupola.
Indirect Arc Furnace -	An electric arc furnace in which the metal bath is not one of the poles of the arc.
Induction Furnace -	A melting furnace which utilizes the heat generated by electrical induction to melt a metal charge.
Inlet Volume -	The quantity of gas entering the collector from the system it serves (in cubic feet per minute at a specified temperature).

Inoculant -	Material which when added to molten metal modifies the structure changing the physical and mechanical properties of the metal.
Inoculation -	The addition to molten metal substances designed to form nuclei for crystallization.
Ladle Addition -	The addition of alloying elements to the molten metal in the ladle.
Latent Heat -	Thermal energy absorbed or released when a substance changes state; that is, from one solid phase to another, or from solid to liquid or the like.
Lining -	Inside refractory layer of firebrick, clay, sand or other material in a furnace or ladle.
Magnesium Treatment -	The addition of magnesium to molten metal to form nodular iron.
Malleable Iron -	A mixture of iron and carbon, including smaller amounts of silicon, manganese, sulfur and phosphorous, which, after being cast as white iron, is converted structurally by heat treatment into a matrix of ferrite containing nodules of temper carbon, and substantially free of all combined carbon.
Material Balance -	A determination of the material input to the cupola and the output to fully account for all material.
Melting Rate -	The tonnage of metal melted per unit of time, generally tons per hour.
Micron -	A unit of measurement which is 1/25,000 of an inch or a millionth of a meter. Often designated by the Greek letter mu.
Mist -	Visible emission usually formed by a condensation process or vapor-phase reaction, the liquid particles being sufficiently large to fall of their own weight.
Mold -	The form, usually made of sand, which contains the cavity into which molten metal is poured to produce a casting of definite shape and outline.
Muller -	A type of foundry sand mixing machine.

Nodular Cast Iron -	(See Ductile Iron)
Opacity -	The state of a substance which renders it partially or wholly impervious to rays of light. Opacity as used in an ordinance refers to the obscuration of an observer's view.
Outlet Volume -	Quantity of gas exhausting from the collector (in cubic feet per minute at a specified temperature).
Oxidizing Atmosphere -	An atmosphere resulting from the combustion of fuels in an atmosphere where excess oxygen is present, and with no unburned fuel lost in the products of combustion.
Oxidation Losses -	Reduction in amount of metal or alloy through oxidation. Such losses usually are the largest factor in melting loss.
Particulate Matter -	Solid or liquid particles, except water, visible with or without a microscope, that make up the obvious portion of an exhaust gas or smoke.
Parting Compound -	A material dusted, brushed or sprayed on patterns or mold halves to prevent adherence of sand and to promote easy separation of cope and drag parting surfaces when cope is lifted from drag.
Pattern -	A form made of wood, metal or other materials around which molding material is placed to make a mold for casting metals.
Plume -	A visible, elongated, vertical (horizontal when windblown) column of mixed gases and gas-borne particulates emitted from a smoke stack.
Pollutant -	Any foreign substance in the air or water in sufficient quantities and of such characteristics and duration as to be injurious to human, plant, or animal life or property, or which unreasonably interferes with the enjoyment of life and property.
Preheater -	A device used to preheat the charge before it is charged into the furnace.
Process Weight -	The total weight of raw materials, except air, introduced into any specific process, possibly causing discharge into the atmosphere.
Recuperator -	Equipment for transferring heat from hot gases for the preheating of incoming fuel or air.
Reducing Atmosphere -	An atmosphere resulting from the incomplete combustion of fuels.

Refractory -	Heat resistant material, usually nonmetallic, used for furnace linings, etc.
Reverberatory Furnace -	A large quantity furnace with a vaulted ceiling that reflects flame and heat toward the hearth or the surface of the charge to be melted.
Ringelmann's Scale - (chart)	A system of optical charts reading from all clear to solid black for grading the density of smoke emissions.
Riser -	An opening in the top of a mold which acts as a reservoir for molten metal and connected to the casting to provide additional metal to the casting as it contracts on solidification.
Rotary Furnace -	A furnace using pulverized coal, gas or oil; of cylindrical shape with conical ends, mounted so as to be tipped at either end to facilitate charging, pouring and slagging.
SCFM -	Units standing for Standard Cubic Feet per Minute. The volume of gas measured at standard conditions, one atmosphere of pressure and 70° F.
Sea Coal -	A term applied to finely ground coal which is mixed with foundry sands.
Sensible Heat -	That portion of the heat which changes only the temperature, but does not cause a phase change.
Shakeout -	The operation of removing castings from a sand mold.
Shell Molding -	A process for forming a mold from thermosetting resin bonded sand mixtures brought in contact with preheated metal patterns, resulting in a firm shell with a cavity corresponding to the outline of the pattern.
Shotblasting -	Casting cleaning process employing a metal abrasive propelled by centrifugal force.
Slag -	Nonmetallic covering which forms on the molten metal as a result of the flux action in combining impurities contained in the original charge, some ash from the fuel and silica and clay eroded from the refractory lining.

Smoke -	A type of emission resulting from incomplete combustion and consisting predominantly of small gas-borne particles of combustible material present in sufficient quantity to be observable independently of the presence of other solids in the gas stream.
Spark Arrestor -	Device over the top of the cupola to prevent the emission of sparks.
Sprue -	The channel, usually vertical, connecting the pouring basin with the runner to the mold cavity. In top pour casting the sprue may also act as a riser.
Standard Air -	Air with a density of .075 pounds per cubic foot, generally equivalent to dry air at 70° F and one atmosphere of pressure (14.7 psia).
Superheating -	Heating of a metal to temperatures above the melting point of the metal to obtain more complete refining or greater fluidity.
Tapping -	Removing molten metal from the melting furnace by opening the tap hole and allowing the metal to run into a ladle.
Tuyere -	The nozzle openings in the cupola shell and refractory lining through which the air blast is forced.
Vapor -	The gaseous form of a substance normally in the solid or liquid state and which can be returned to these states either by increasing pressure or decreasing temperature.
Ventilation System -	In the foundry, the exhaust ventilation and dust control equipment for the health, safety, comfort and good housekeeping of those who work there.
Venturi Scrubber -	In air pollution control, a high velocity gas stream directed into the throat of a venturi of a wet scrubber to separate out particulates.
Wet Cap -	A device installed on a cupola stack that collects emissions by forcing them through a curtain of water. The device requires no exhaust fan but depends upon the velocity pressure of the effluent gases.

Wet Scrubber -	In air pollution control, a liquid spray device, usually water, for collecting pollutants in escaping foundry gases.
Wind Box -	The chamber surrounding a cupola through which air is conducted under pressure to the tuyeres.

DISTRIBUTION OF IRON FOUNDRIES 1969

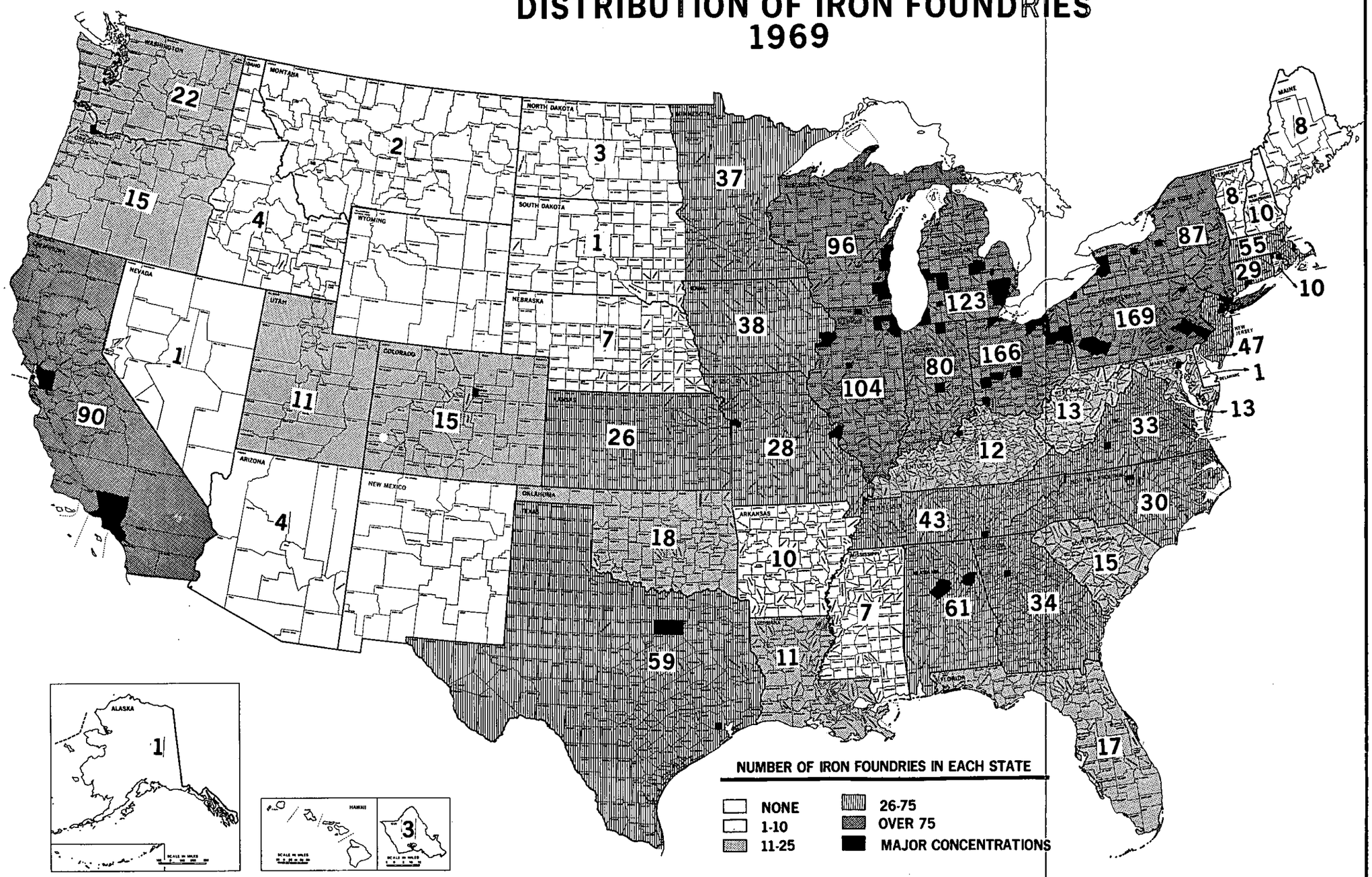

SOURCE: PENTON PUBLISHING CO.

POPULATION TRENDS IN THE FOUNDRY INDUSTRY

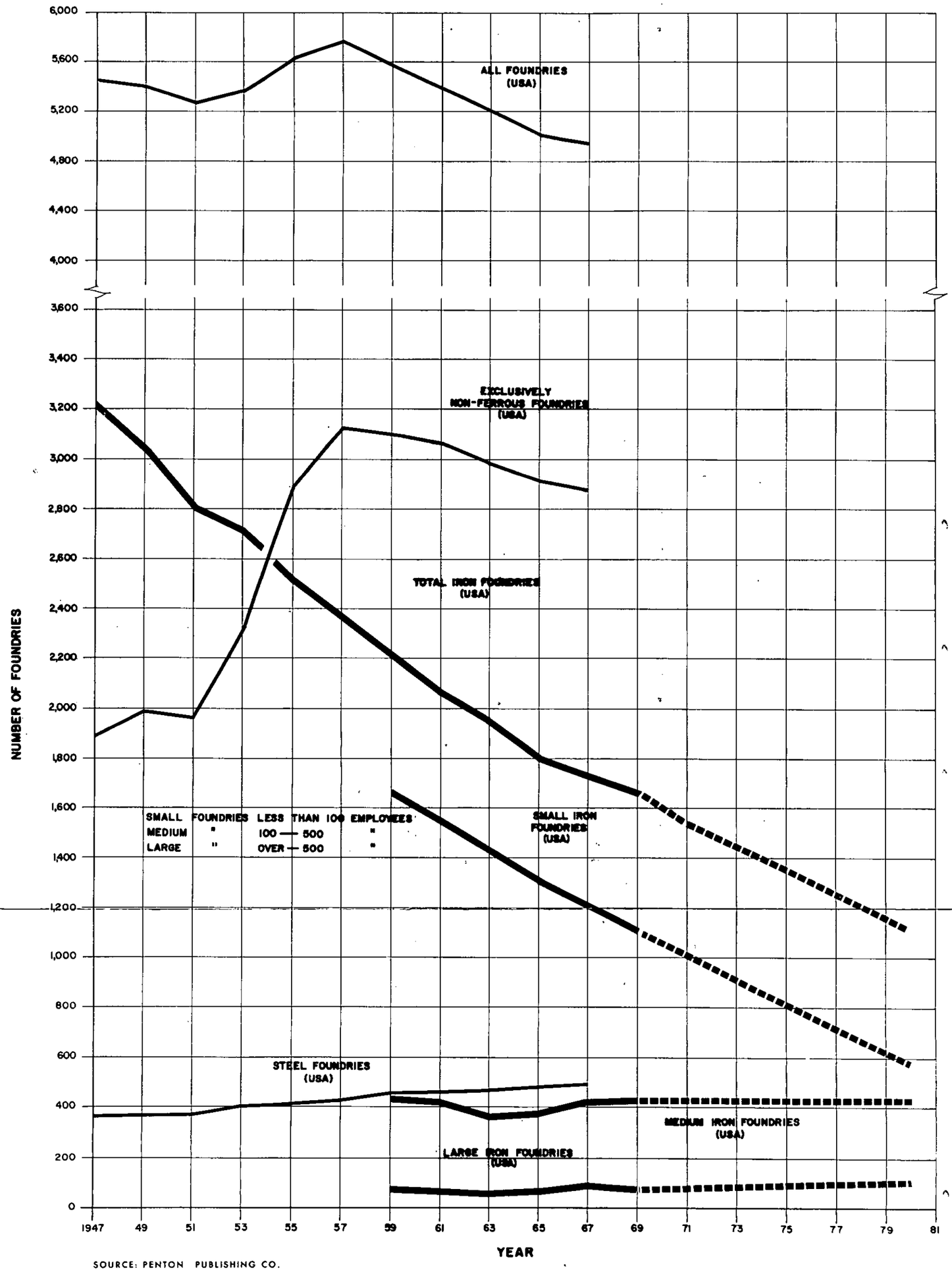

SOURCE: PENTON PUBLISHING CO.

EXHIBIT II-3

IRON FOUNDRY PRODUCTION TRENDS

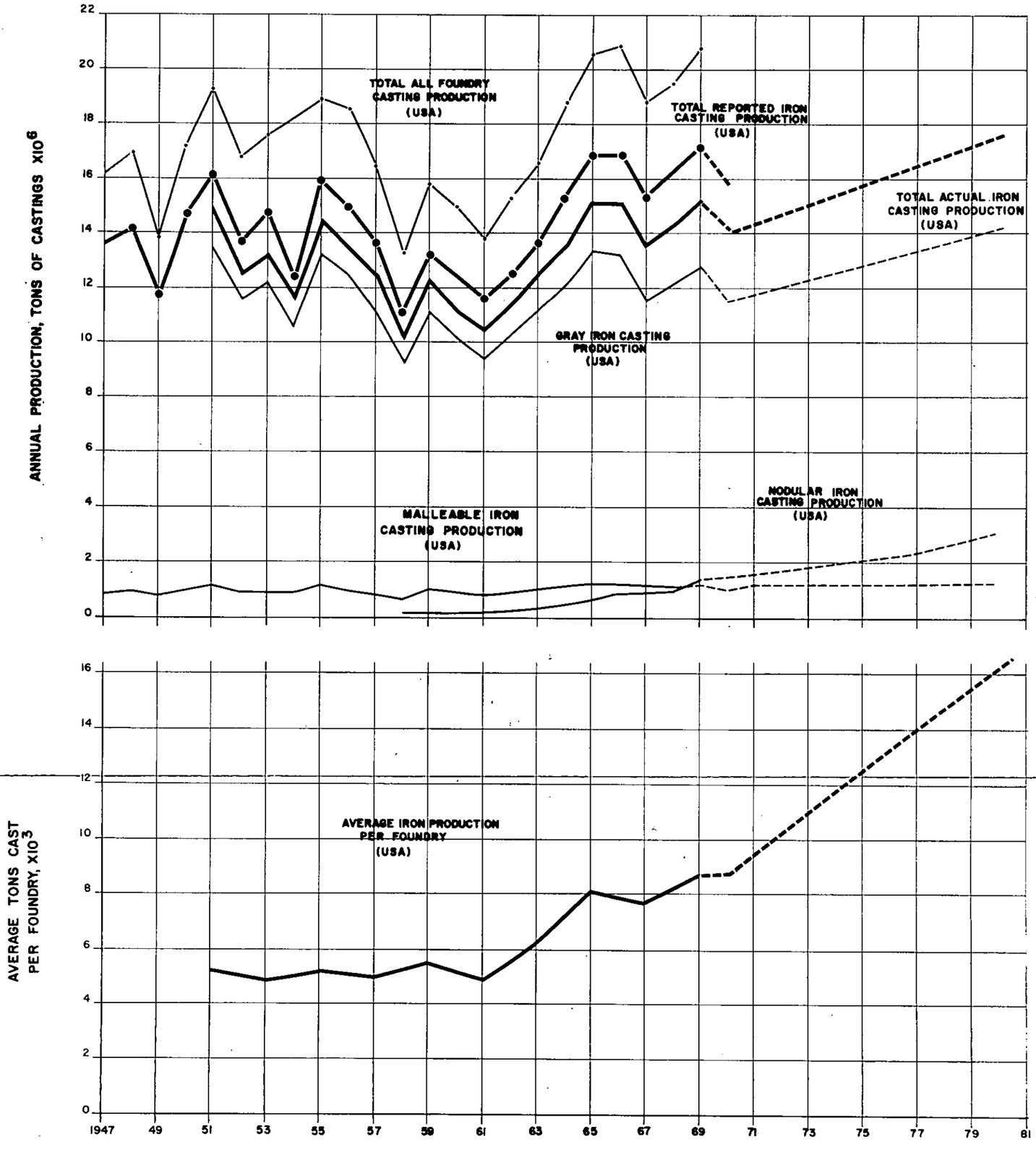

SOURCE: DEPARTMENT OF COMMERCE

EXHIBIT II-4

EXHIBIT II-5

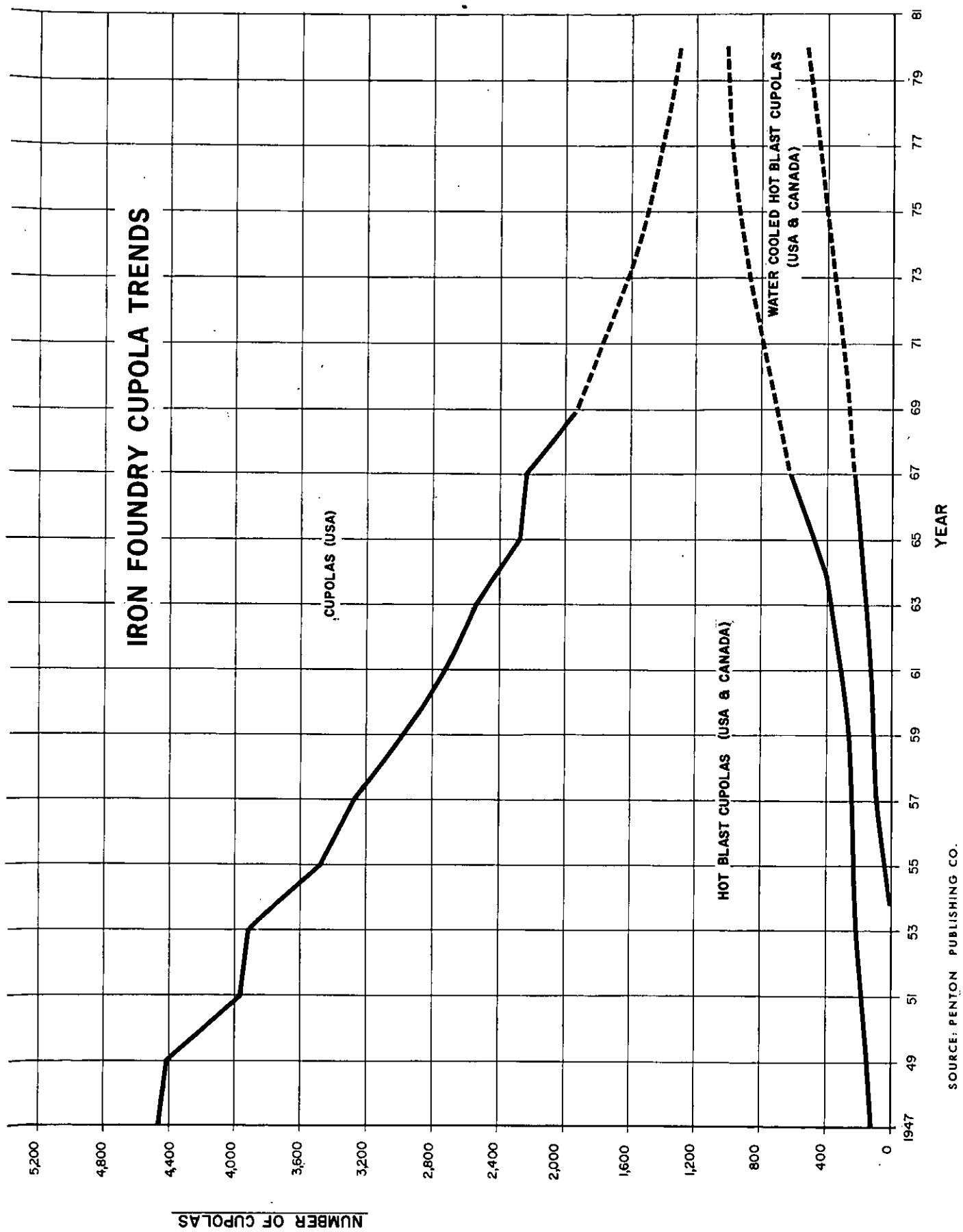
IRON FOUNDRY CUPOLA TRENDS
CUPOLAS (USA)
HOT BLAST CUPOLAS (USA & CANADA)
WATER COOLED HOT BLAST CUPOLAS (USA & CANADA)
NUMBER OF CUPOLAS
5,200
4,800
4,400
4,000
3,600
3,200
2,800
2,400
2,000
1,600
1,200
800
400
0
YEAR
1947
49
51
53
55
57
59
61
63
65
67
69
71
73
75
77
79
81
SOURCE: PENTON PUBLISHING CO.

IRON FOUNDRY ELECTRIC FURNACE TRENDS

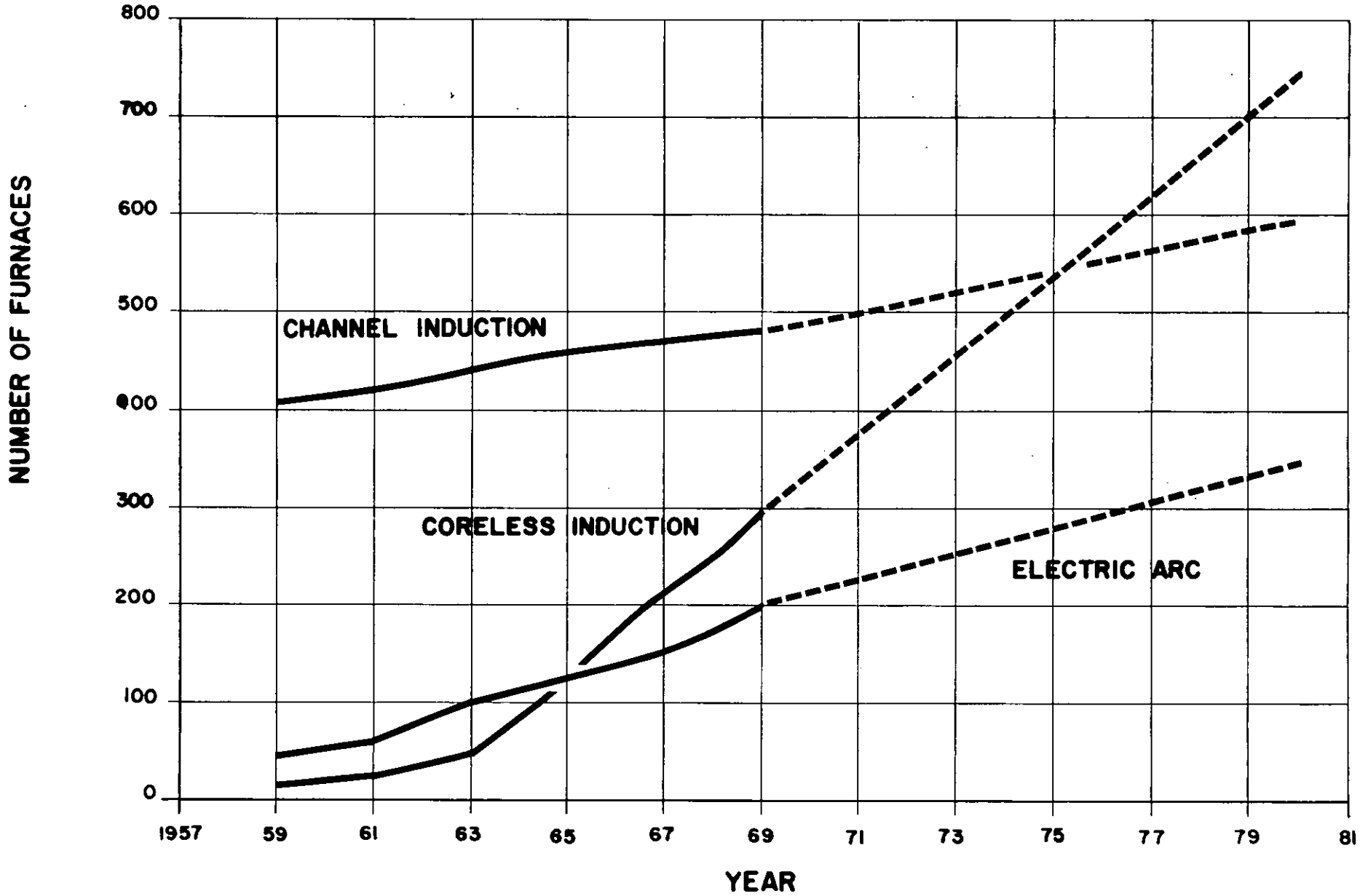

SOURCE : DATA PROVIDED BY FURNACE MANUFACTURERS

EXHIBIT II-6

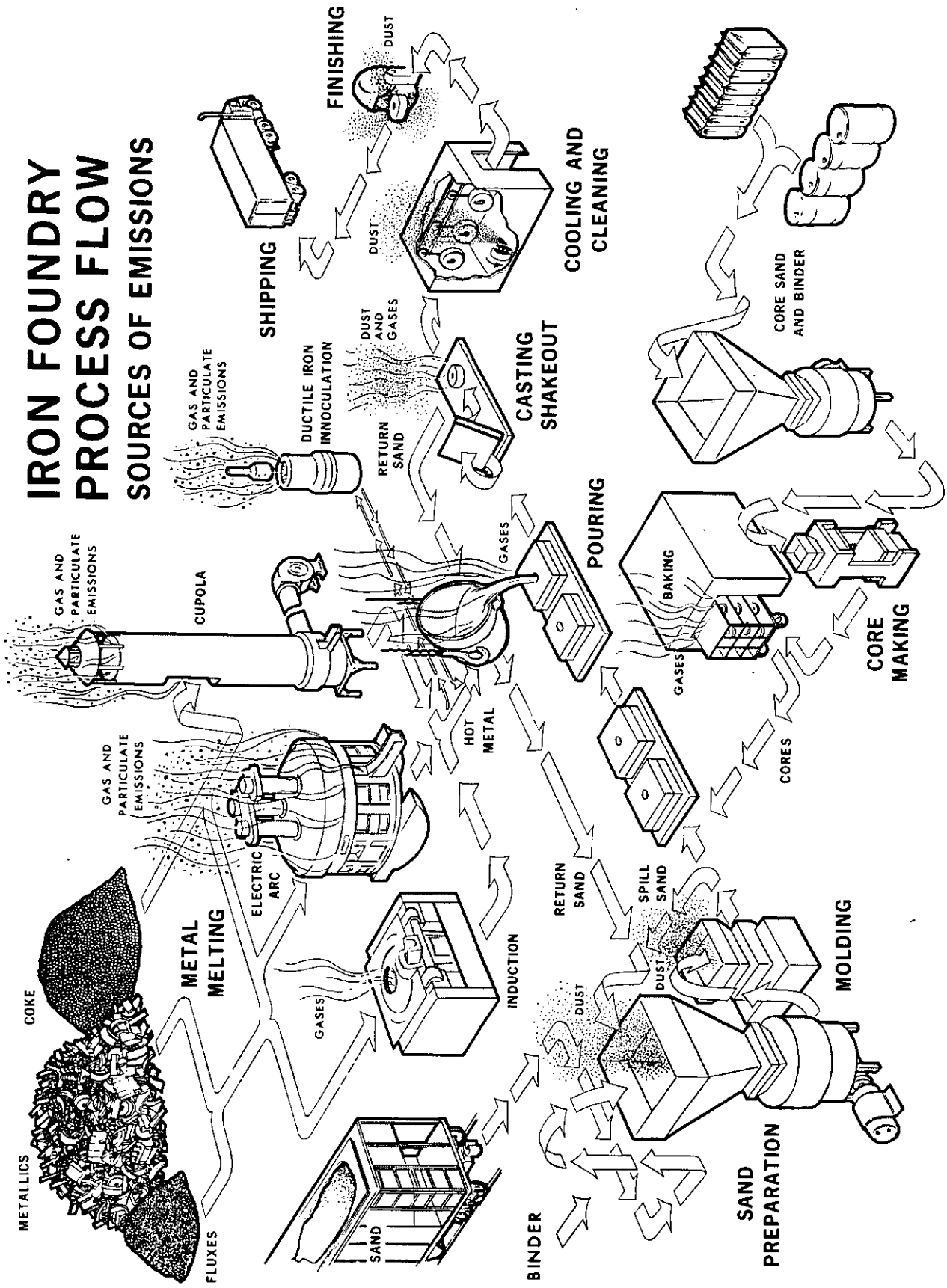
IRON FOUNDRY
PROCESS FLOW
SOURCES OF EMISSIONS
FINISHING
DUST
SHIPPING
DUST
COOLING AND
CLEANING
GAS AND
PARTICULATE
EMISSIONS
DUCTILE IRON
INNOCULATION
DUST
AND
GASES
RETURN
SAND
CASTING
SHAKEOUT
CORE SAND
AND BINDER
GAS AND
PARTICULATE
EMISSIONS
CUPOLA
GASES
POURING
BAKING
GASES
CORE
MAKING
HOT
METAL
CORES
GAS AND
PARTICULATE
EMISSIONS
ELECTRIC
ARC
RETURN
SAND
SPILL
SAND
COKE
METAL
MELTING
GASES
INDUCTION
DUST
DUST
MOLDING
METALLICS
FLUXES
SAND
BINDER
SAND
PREPARATION

EXHIBIT III-2

PROCESS FLOW DIAGRAM

GRAY, DUCTILE AND MALLEABLE IRON

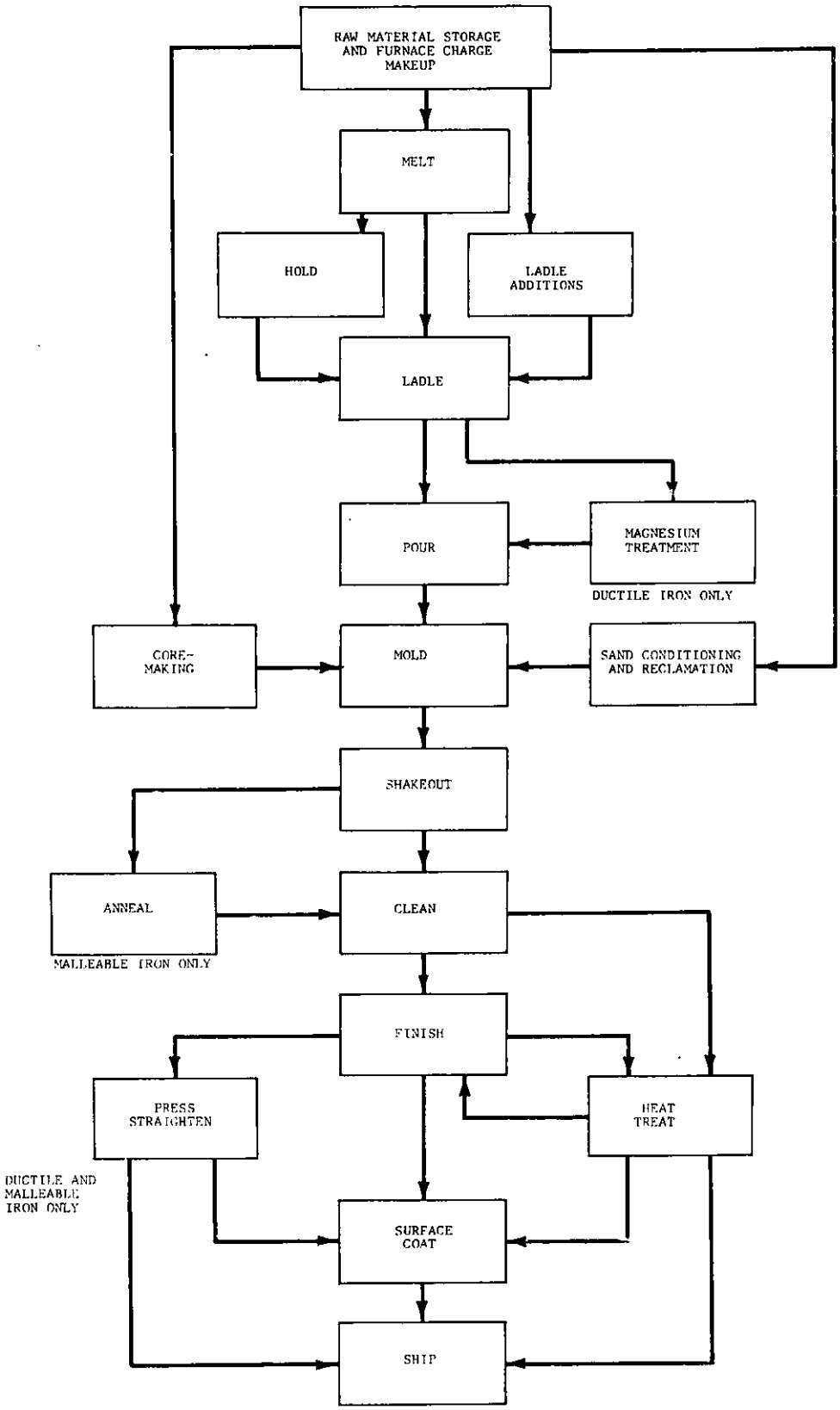

NOTE: ALL OPERATIONS APPLY TO GRAY, DUCTILE AND MALLEABLE IRON UNLESS OTHERWISE NOTED

SUMMARY OF GRAY IRON SPECIFICATIONS

Specifying Body	Specifying Number	Class	Tensile Strength Minimum PSI	Brinell Hardness		Total Carbon Percent		Silicon Percent	
				Minimum	Maximum	Minimum	Maximum	Minimum	Maximum
American Society for Testing and Materials	A159-62T	G2000(110)	20,000	-	187	3.40	3.70	2.30	2.80
		G3000(111)	30,000	170	223	3.20	3.50	2.00	2.30
		G3000a(113)	30,000	179	229	3.40	-	1.10	2.10
		G4000b(114)	40,000	207	269	3.40	-	1.10	1.80
Society of Automotive Engineers	J431a	G3500c(115)	35,000	187	241	3.50	-	1.10	1.80
		G3500(120)	35,000	187	241	3.10	3.40	1.90	2.20
		G4000(121)	40,000	202	255	3.00	3.30	1.80	2.10
General Services Administration	QQ-1-653	G4500(122)	45,000	217	269	3.00	3.30	1.80	2.10
		G4000d(123A)	40,000	248	311	3.10	3.40	2.10	2.40
		G4000e(123B)	40,000	248	311	3.10	3.45	2.10	2.40
		G4000f(123C)	40,000	248	311	3.40	3.75	2.10	2.35

Source: Gray and Ductile Iron Founders' Society, Inc.

SUMMARY OF DUCTILE IRON SPECIFICATIONS

Specifying Body and Number	Use	Class or Grade	Tensile Strength Minimum PSI	Yield Strength Minimum PSI	Total Carbon Percent		Silicon Percent		Manganese Percent		Phosphorus Percent		Nickel Percent		Chromium Percent		Brinell Hardness	
					Min.	Max.	Min.	Max.	Min.	Max.	Min.	Max.	Min.	Max.	Min.	Max.	Min.	Max.
American Society for Testing and Materials A439-62	Austenitic Ductile Iron Castings	D-2	58,000	30,000	-	3.00	1.50	3.00	.70	1.25	-	.08	18.00	22.00	1.75	2.75	139	202
		D-2B	58,000	30,000	-	3.00	1.50	3.00	.70	1.25	-	.08	18.00	22.00	2.75	4.00	148	211
		D-2C	58,000	28,000	-	2.90	1.00	3.00	1.80	2.40	-	.08	21.00	24.00	-	.50	121	171
		D-3	55,000	30,000	-	2.60	1.00	2.80	-	1.00	-	.08	28.00	32.00	2.50	3.50	139	202
		D-3A	55,000	30,000	-	2.60	1.00	2.80	-	1.00	-	.08	28.00	32.00	1.00	1.50	131	193
		D-4	60,000	-	-	2.60	5.00	6.00	-	1.00	-	.08	28.00	32.00	4.50	5.50	202	273
		D-5	55,000	30,000	-	2.40	1.00	2.80	-	1.00	-	.08	34.00	36.00	-	.10	131	185
		D-5B	55,000	30,000	-	2.40	1.00	2.80	-	1.00	-	.08	34.00	36.00	2.00	3.00	139	193
American Society for Testing and Materials A445-63T	Ferritic Ductile Iron Castings for Valves, Flanges, Pipe Flanges, Pipe Fittings and Other Piping Components	60-45-15	60,000	45,000	3.00	-	-	2.50	-	-	-	.08	-	-	-	-	149	201

Source: Gray and Ductile Iron Founders' Society, Inc.

EXHIBIT III-4

SUMMARY OF MALLEABLE IRON SPECIFICATIONS

TYPICAL COMPOSITION RANGES

Type	Grade	Carbon Percent		Silicon Percent		Manganese Percent		Sulfur Percent		Phosphorus Percent	
		Min.	Max.	Min.	Max.	Min.	Max.	Min.	Max.	Min.	Max.
Ferritic Malleable Iron	32510	2.30	2.65	.90	1.65	.25	.55	.05	.18	-	.18
	35018	2.00	2.45	.95	1.35	.25	.55	.05	.18	-	.18
Pearlitic Malleable Iron	-	2.00	2.65	.90	1.65	.25	1.25	.05	.18	-	.18

Source: American Society for Metals Handbook, Vol. 1, 1961.

EXHIBIT III-5

EXHIBIT III-6

PROCESS FLOW DIAGRAM

RAW MATERIAL STORAGE AND FURNACE CHARGE MAKEUP

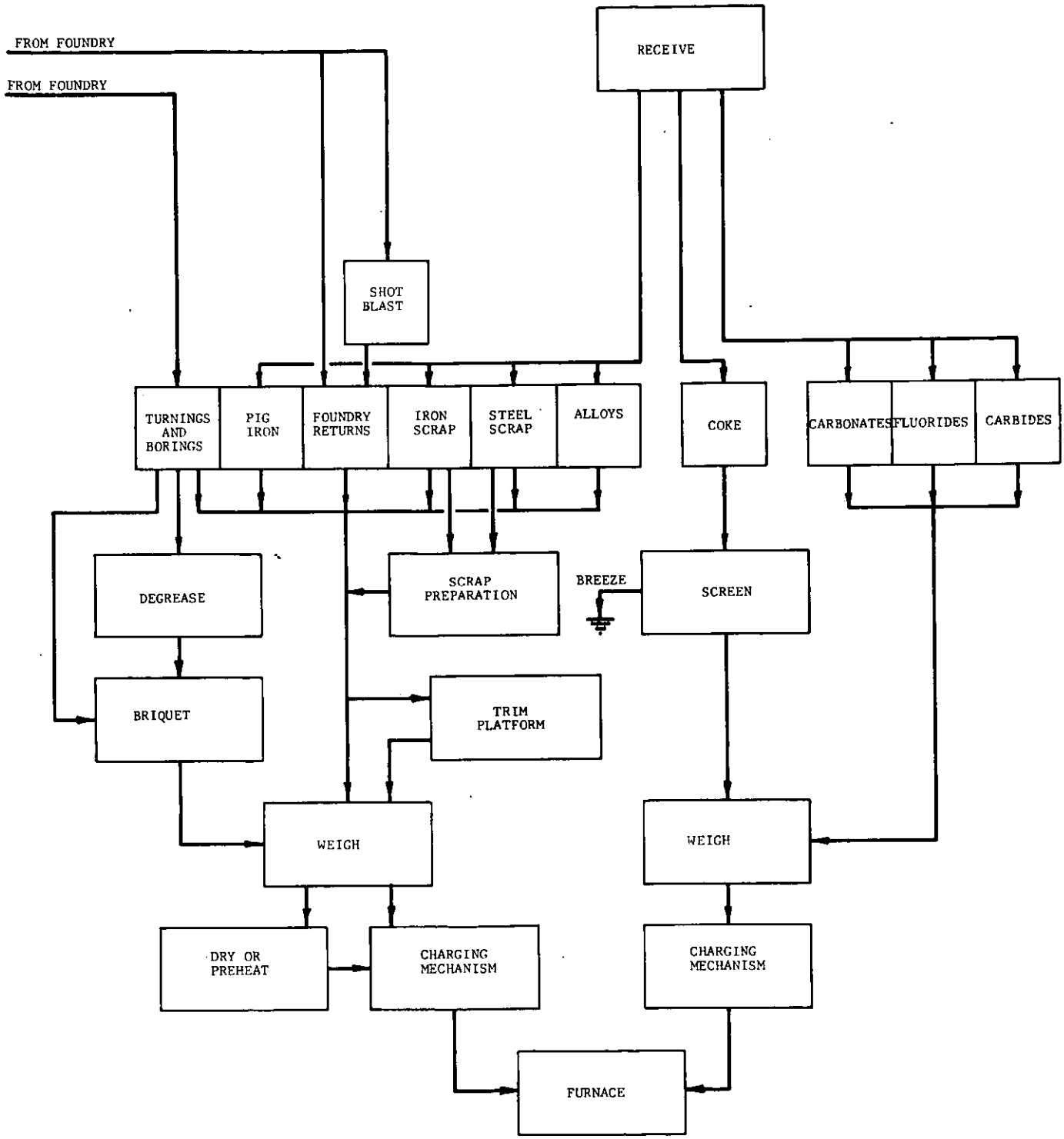

EXHIBIT III-7

PROCESS FLOW DIAGRAM

MELTING DEPARTMENT

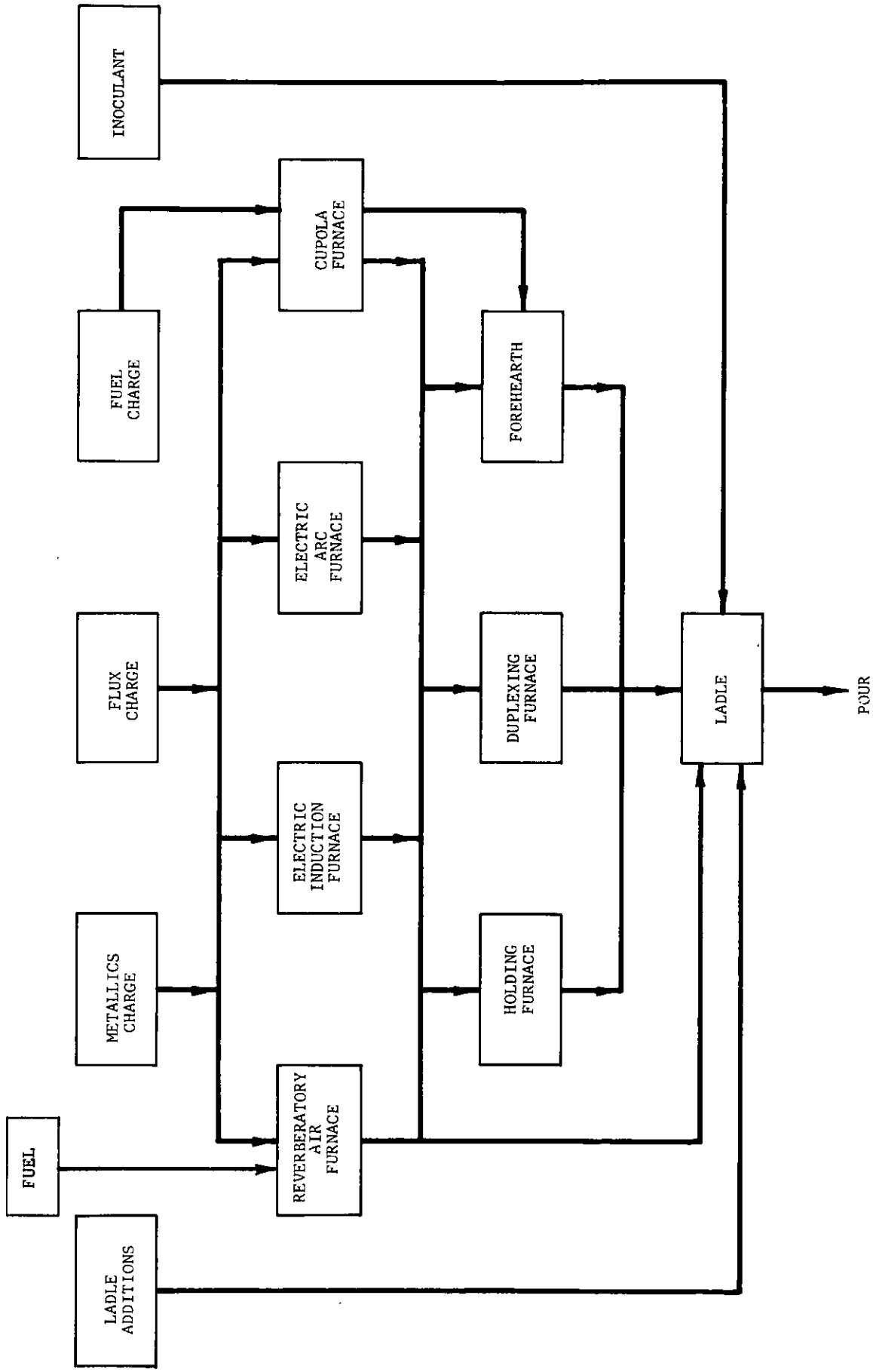

ILLUSTRATION OF CONVENTIONAL LINED CUPOLA

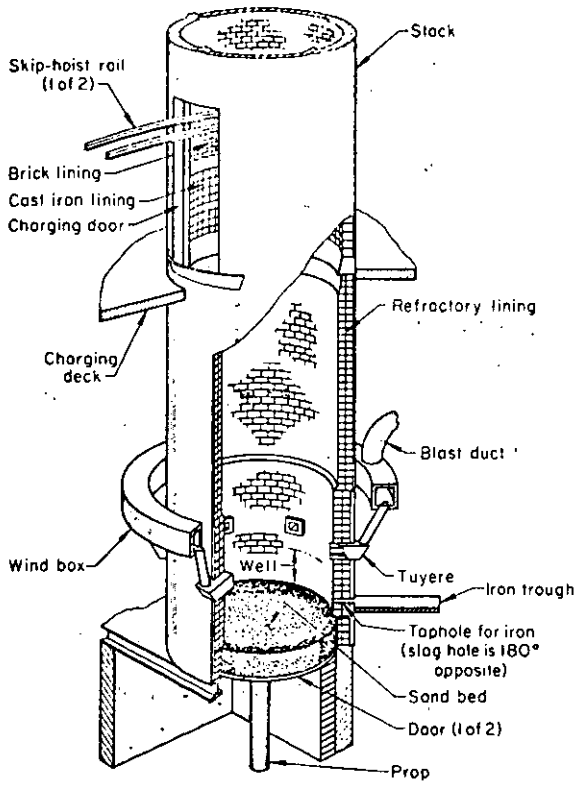

Conventional cupola

Source: Metals Handbook, 8th Edition, Vol. 5, Forging and Casting, American Society for Metals, 1970, p. 337.

ILLUSTRATION OF WATER-COOLED CUPOLA

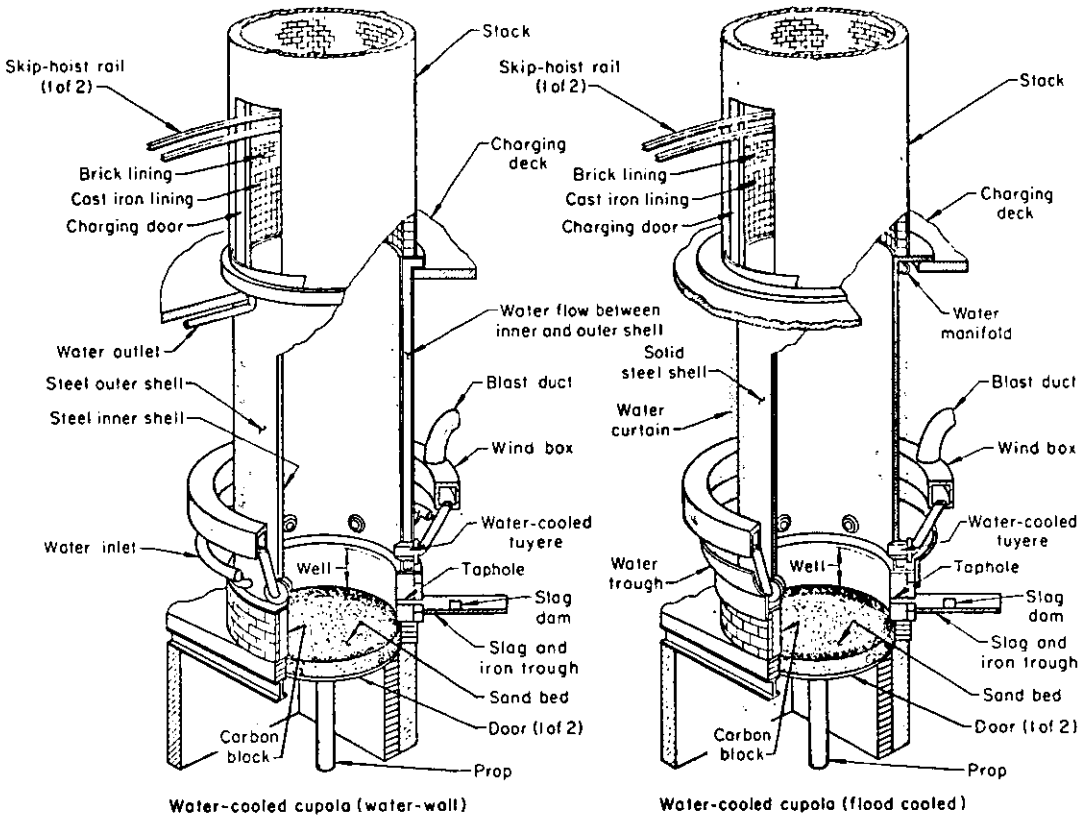

Source: Metals Handbook, 8th Edition, Vol. 5, Forging and Casting, American Society for Metals, 1970, p. 337.

APPROXIMATE MELTING RATES AND GAS VOLUMES
FOR LINED CUPOLAS

FCE Lined Dia.	Melt Rate TPH Metal to Coke Ratio				Blast Air (SCFM)	Av. Chg. Door (Sq. Ft.)	Indraft (CFM)	Above-Door Total (SCFM)	Below-Door Total (SCFM)	Above Door (ACFM)	Below Door @850° F (ACFM)
	6/1	8/1	10/1	12/1							
18	3/4	1	-	-	570				650		2,000
23	1	1-1/2	-	-	940	10	3,000	3,940	1,050	7,700	3,000
27	1-3/4	2-1/4	-	-	1,290	10	3,000	4,290	1,450	8,500	4,000
32	2-1/2	3-1/4	4	-	1,810	10	3,000	4,810	2,000	10,800	5,000
37	3-1/4	4-1/4	5-1/4	-	2,420	11-1/4	3,380	5,800	2,700	13,100	7,000
42	4	5-1/2	7	-	3,100	16-1/2	4,950	8,050	3,500	18,100	9,000
45	4-1/2	6-1/4	8	-	3,600	22	6,600	10,200	4,000	23,000	12,000
48	5-1/2	7-1/4	9	10-3/4	4,100	45	13,500	17,600	4,600	34,500	16,000
54	7	9-1/4	11-1/2	13-3/4	5,200	50	15,000	20,200	5,800	39,500	18,000
60	9	11-1/4	14	17	6,400	50	15,000	21,400	7,100	42,500	20,000
66	10-1/2	13-3/4	17	20-1/2	7,700	52	15,600	23,300	8,500	51,000	23,000
72	12-1/4	16-1/4	20-1/4	24-1/2	9,200	52	15,600	24,800	10,500	56,000	28,000
78	15	19	23-3/4	28-3/4	10,700	60	18,000	28,700	12,000	65,000	32,000
84	17	22-1/4	27-3/4	33-1/4	12,500	63	18,900	31,400	14,000	71,000	37,000

Adapted from Useful Information for Foundrymen published by Whiting Corporation.

Assumptions:
1. No door closure
2. No oxygen enrichment
3. No fuel injection
4. Indraft at 300 FPM

APPROXIMATE MELTING RATES AND
GAS VOLUMES FOR UNLINED CUPOLAS

FCE Dia.	Melt Rate TPH Metal to Coke Ratio (1000° F Hot Blast)						Blast Air (SCFM)	Av. Chg. Door (Sq. Ft.)	Indraft (CFM)	Above-Door Total (SCFM)	Below-Door Total (SCFM)	Above Door (ACFM)	Below Door @ 850° F (ACFM)
	5/1	6/1	7/1	8/1	9/1	10/1							
36	4-1/2	4-3/4	5	5-1/2	5-3/4	6-1/4	2,300	12	3,600	5,900	2,600	13,300	7,000
42	6-1/4	6-1/2	6-3/4	7-1/4	7-3/4	8-1/4	3,100	16-1/2	4,950	8,050	3,500	18,100	9,000
48	8	8-1/4	9	9-3/4	10-1/2	11-1/4	4,100	45	13,500	17,600	4,600	34,500	16,000
54	10	10-1/2	11-1/2	12-1/4	13-1/4	14-1/4	5,200	50	15,000	20,200	5,800	39,500	18,000
60	12-1/2	13	13-1/2	15-1/4	16-1/4	17-1/4	6,400	50	15,000	21,400	7,100	41,500	20,000
66	15	15-1/2	17	18-1/4	19-3/4	20-3/4	7,700	52	15,600	23,300	8,500	51,000	23,000
72	17-3/4	18-1/2	20	22	23-1/4	25	9,200	60	18,000	27,200	10,500	59,200	28,000
78	20-3/4	21-3/4	23-1/4	25-1/2	27-1/4	29	10,700	60	18,000	28,700	12,000	65,000	32,000
84	24-1/4	25-1/4	27-1/4	29-1/4	32	34	12,500	63	18,900	31,400	14,000	71,000	37,000
90	27-3/4	29	31-1/2	34-1/4	36-1/4	39	14,300	95	28,500	42,800	16,000	93,000	42,000
96	31-3/4	33	34-1/2	39	41-1/2	44	16,300	110	33,000	49,300	18,000	105,000	48,000
102	36	37-1/4	40-1/2	44	47	50	18,400	120	36,000	54,400	21,000	115,000	56,000
108	40	41-1/2	45	49	52-1/2	56	20,600	128	38,400	59,000	23,000	128,000	62,000

Adapted from Useful Information for Foundrymen published by Whiting Corporation.

Assumptions:
1. No door closure
2. No oxygen enrichment
3. No fuel injection
4. Indraft at 300 FPM

EXHIBIT III-11

ILLUSTRATION OF CUPOLA REACTION AREA

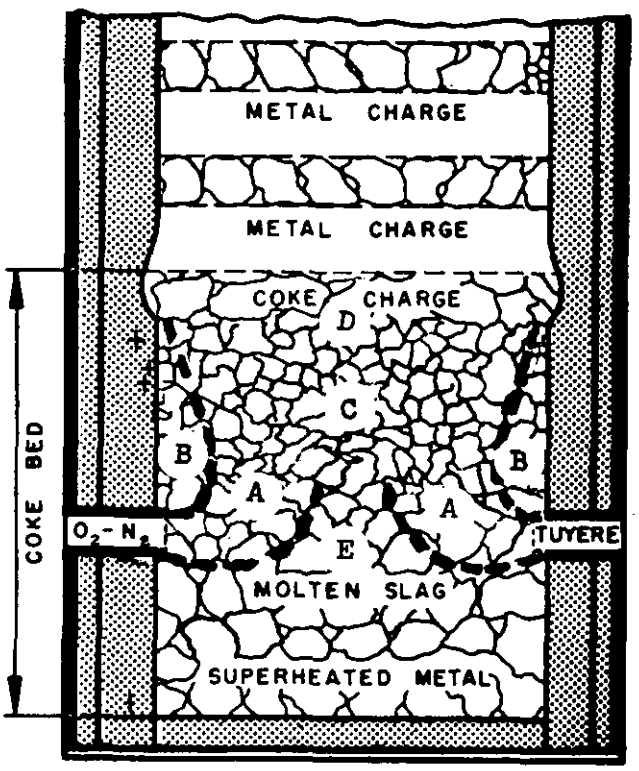

Fig. 3.3. Cross-section of cupola showing reaction areas.
A — $O_2 + CO_2$
B — Area high in O_2
C — $CO + CO_2$
D — High CO: CO_2 ratio
E — High CO: CO_2 ratio

Source: The Cupola and Its Operation; published by the American Foundrymen's Society, Third Edition, 1965, p. 26.

TYPICAL CUPOLA MATERIAL BALANCE

Lined Cupola			Water-Cooled Cupola		
Inputs	Pounds	Percent	Inputs	Pounds	Percent
Metal Charge	2,004	52.08%	Metal Charge	1,992	47.42%
Pig Iron	0	0.00	Pig Iron	233	5.56
Returns	802	20.83	Returns	996	23.71
Steel Scrap	1,137	29.56	Steel Scrap	739	17.60
Iron Scrap	0	0.00	Iron Scrap	0	0.00
Ferroalloys	65	1.69	Ferroalloys	23	0.56
Coke	167	4.33	Coke	253	6.03
Natural Gas	29	0.75	Natural Gas	0	0.00
Fuel Oil	0	0.00	Fuel Oil	0	0.00
Flux and Additives	65	1.69	Flux and Additives	58	1.38
Air	1,556	40.43	Air	1,898	45.18
Oxygen	0	0.00	Oxygen	0	0.00
Cupola Lining	27	0.71	Cupola Lining	0	0.00
Total Input Materials	3,848	100.00%	Total Input Materials	4,201	100.0%
Outputs			Outputs		
Molten Iron	2,000	51.97%	Molten Iron	2,000	47.60%
Slag	32	0.83	Slag	44	1.04
Emissions Dust	14	0.37	Emissions Dust	19	0.45
Top Gases	1,802	46.84	Top Gases	2,139	50.90
Nitrogen	1,188	65.91	Nitrogen	1,449	67.77
Carbon Dioxide	507	28.10	Carbon Dioxide	468	21.87
Carbon Monoxide	99	5.49	Carbon Monoxide	220	10.29
Hydrogen	9	0.47	Hydrogren	2	0.07
Sulfur Dioxide	0	0.02	Sulfur Dioxide	-0	-0.00

ILLUSTRATION OF ELECTRIC ARC FURNACE

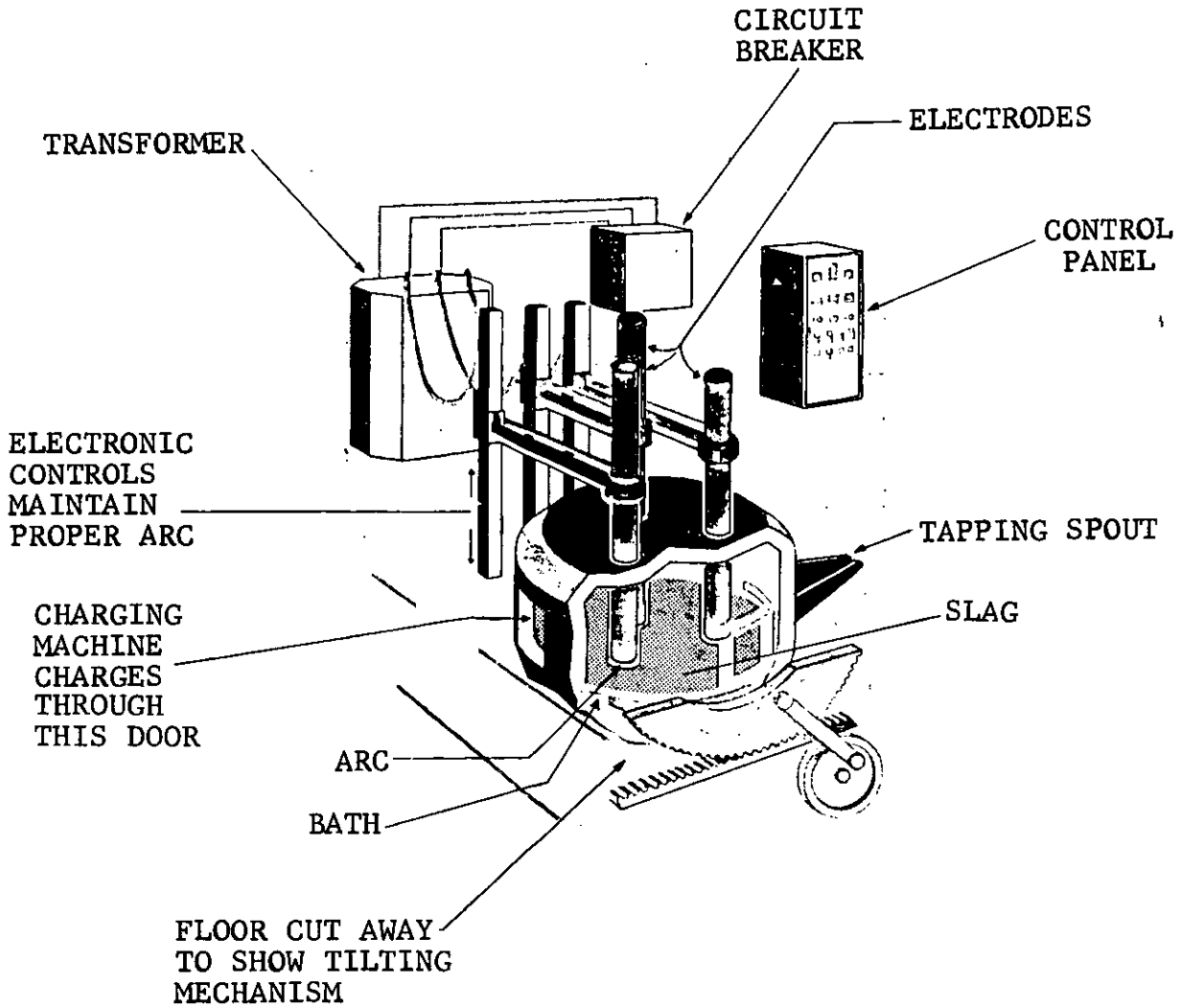

Source: The Picture Story of Steel, published by the American Iron and Steel Institute, 1952, p. 18.

HEAT BALANCE	BTU/Ton (x1000)	Percent
Input Heat		
Electrical Energy	1,907	100.0
Output Heat		
Melting and Superheating Iron	1,132	59.3
Heat Content of Slag	81	4.3
Decomposition of Water	9	.5
Gases		
Sensible Heat	231	12.1
Latent Heat	-138	- 7.2
Heat, Electrical and Cooling Losses	592	31.0
Total	1,407	100.0

MATERIAL BALANCE	Pounds	Percent
Input Material		
Returns	1,388	56.9
Steel Scrap	630	25.8
Ferroalloys	17	.7
Carbo-Coke	31	1.3
Electrodes	10	.4
Air	318	13.0
Moisture	8	.3
Lining	38	1.6
Total	2,440	100.0
Output Material		
Molten Iron	1,997	81.8
Slag	93	3.8
Particulate Emissions	14	.6
Gaseous Emissions	336	13.8
Total	2,440	100.0

NOTE: Energy quantities include only theoretical requirements for heating, melting, and superheating to 2800° F, and normal electrical, transmission and heat losses. The total is less than the average used in normal practice since it does not include allowances for holding, or normal operating delays.

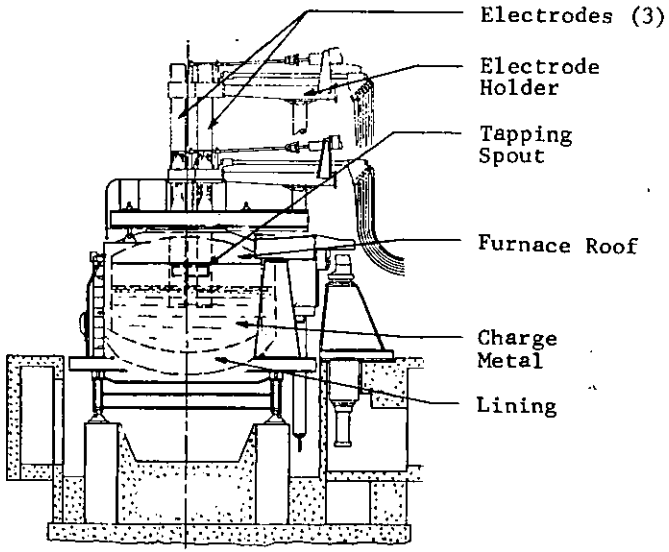

ELECTRIC ARC FURNACE - HEAT AND MATERIAL BALANCE

ILLUSTRATION OF CHANNEL INDUCTION FURNACE

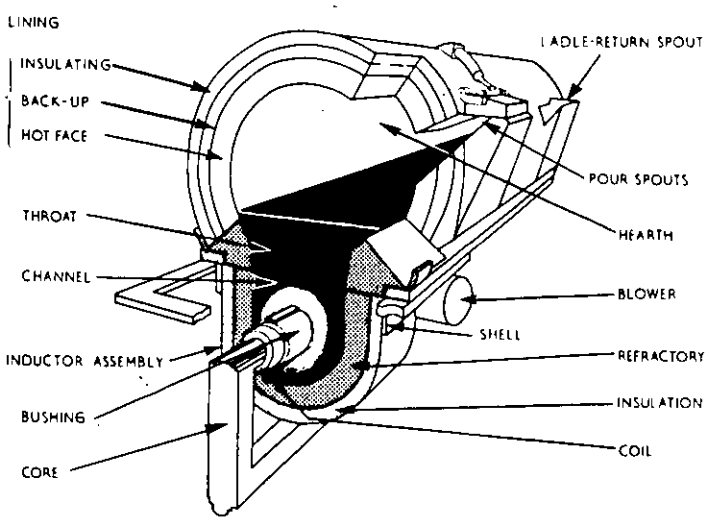

Source: "Electric Melting for Mass Production in U.S. Iron Foundries," Modern Casting, July, 1968, p. 47.

ILLUSTRATION OF CORELESS INDUCTION FURNACE

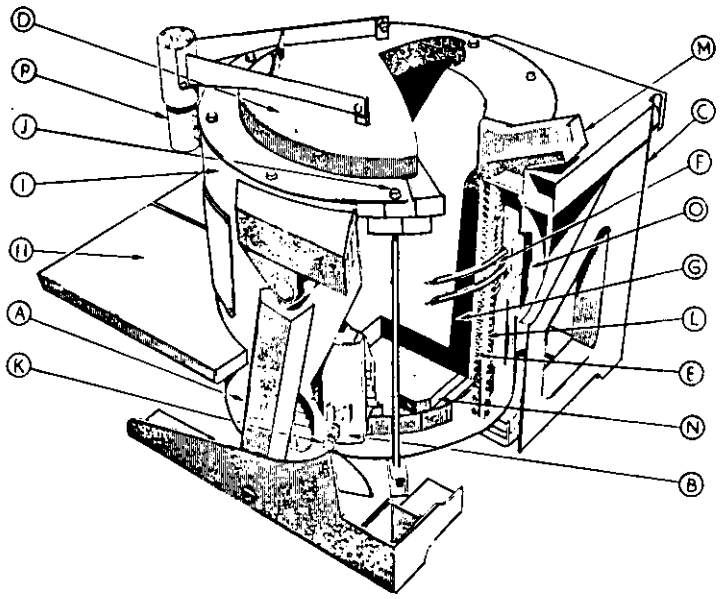

A. HYDRAULIC TILT CYLINDERS
B. SHUNTS
C. STANCHION
D. COVER
E. COIL
F. LEADS
G. WORKING REFRACTORY
H. OPERATOR'S PLATFORM
I. STEEL SHELL
J. TIE RODS
K. CLAMPING BOLTS
L. COIL SUPPORT
M. SPOUT
N. REFRACTORY BRICK
O. ACCESS PORT
P. LID HOIST MECHANISM

Source: "Electric Melting for Mass Production in U.S. Iron Foundries," Modern Casting, July, 1968, p. 47.

HEAT BALANCE	BTU/TON (x 000)	PERCENT
INPUT HEAT		
ELECTRICAL ENERGY	1,669	100.0
OUTPUT HEAT		
MELTING AND SUPER-HEATING IRON	1,131	68.4
ELECTIRCAL LOSSES	325	19.1
TRANSMISSION LOSSES	81	4.7
HEAT LOSS	132	7.8
TOTAL	1,669	100.0

NOTE: ENERGY QUANTITIES INCLUDE ONLY THEORETICAL REQUIREMENTS FOR HEATING, MELTING, AND SUPERHEATING TO 2800° F, AND NORMAL ELECTRICAL, TRANSMISSION AND HEAT LOSSES. THE TOTAL IS LESS THAN THE AVERAGE USED IN NORMAL PRACTICE SINCE IT DOES NOT INCLUDE ALLOWANCES FOR HOLDING, OR NORMAL OPERATING DELAYS.

MATERIAL BALANCE	POUNDS	PERCENT
INPUT MATERIALS		
RETURNS	378	18.6
STEEL SCRAP	1,351	66.7
IRON CHIPS	188	9.3
FERROALLOYS	43	2.1
LINING	6	.3
CARBO-COKE	61	3.0
TOTAL	2,027	100.0
OUTPUT MATERIALS		
MOLTEN IRON	2,000.0	98.7
SLAG	10.0	.5
EMISSIONS		
GASEOUS	15.5	.7
PARTICULATE	1.5	.1
TOTAL	2,027.0	100.0

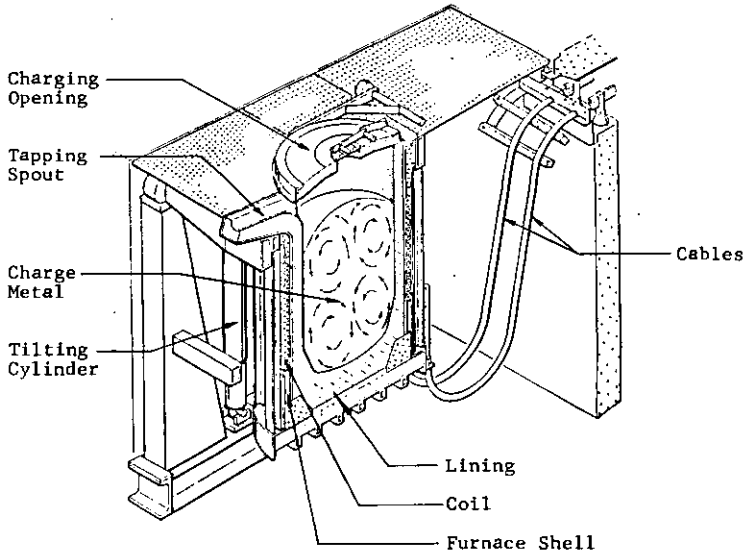

CORELESS INDUCTION FURNACE - HEAT AND MATERIAL BALANCE

ILLUSTRATION OF REVERBERATORY FURNACE

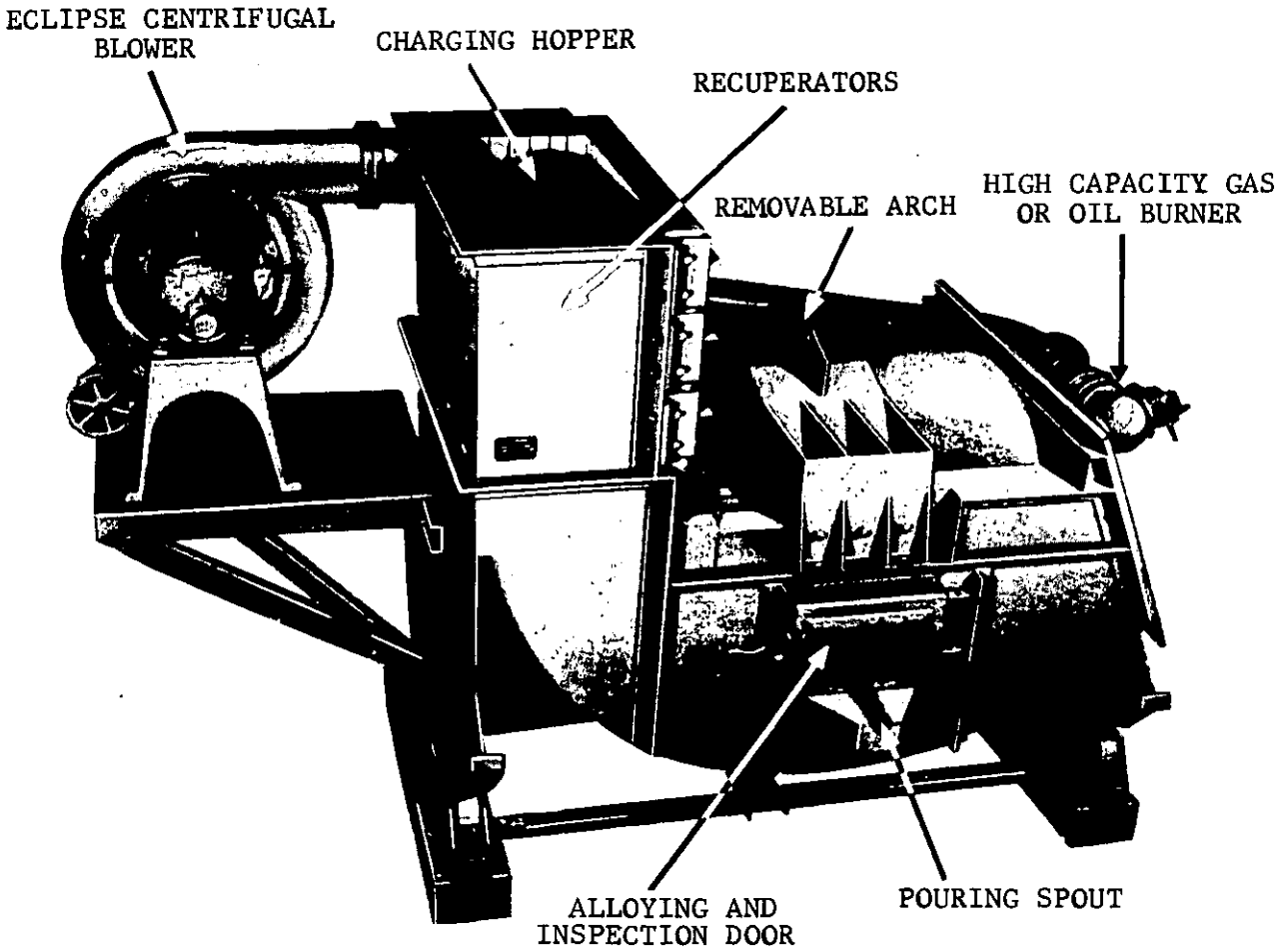

Source: The Wheelabrator Corporation.

ILLUSTRATION OF MAGNESIUM TREATMENT METHODS FOR PRODUCING DUCTILE IRON

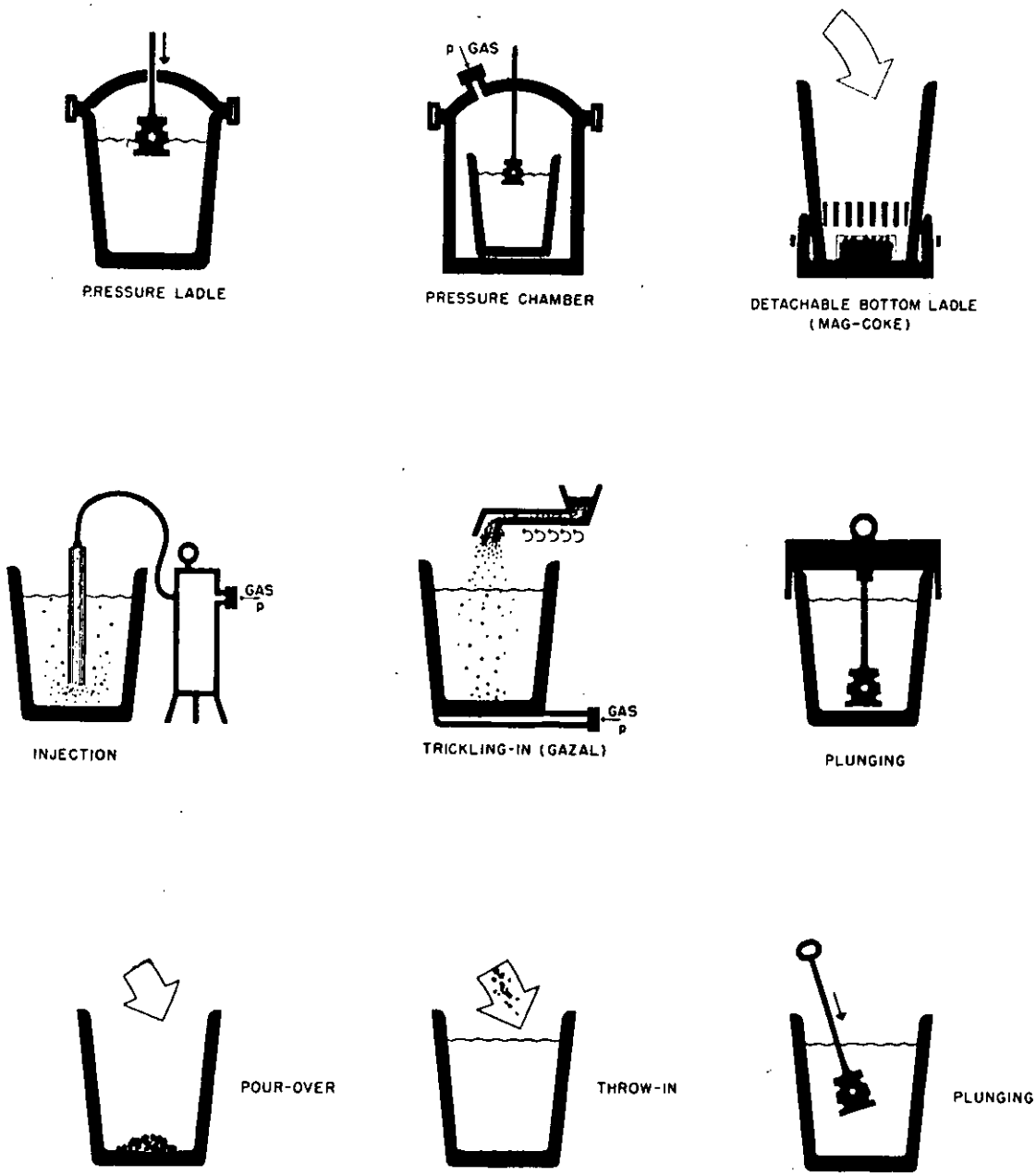

Source: "Comparing Processes for Making Ductile Iron," E. Modl, FOUNDRY, July, 1970, pp. 44-46.

EXHIBIT III-21

PROCESS FLOW DIAGRAM

MOLDING, POURING & SHAKEOUT

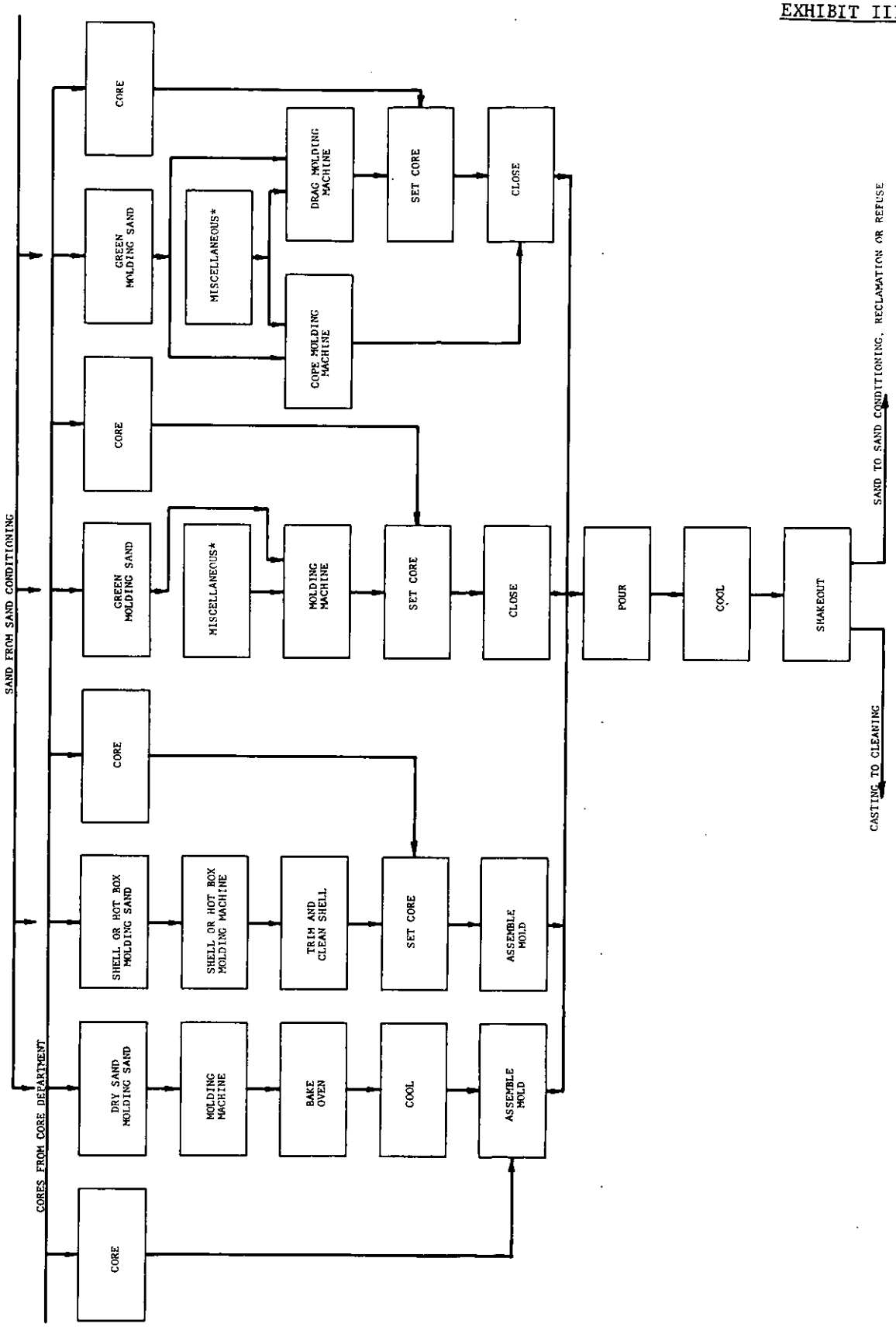

* MISCELLANEOUS - PARTING COMPOUND, WASH, CHAPLETS, ETC.

PROCESS FLOW DIAGRAM

CLEANING & FINISHING

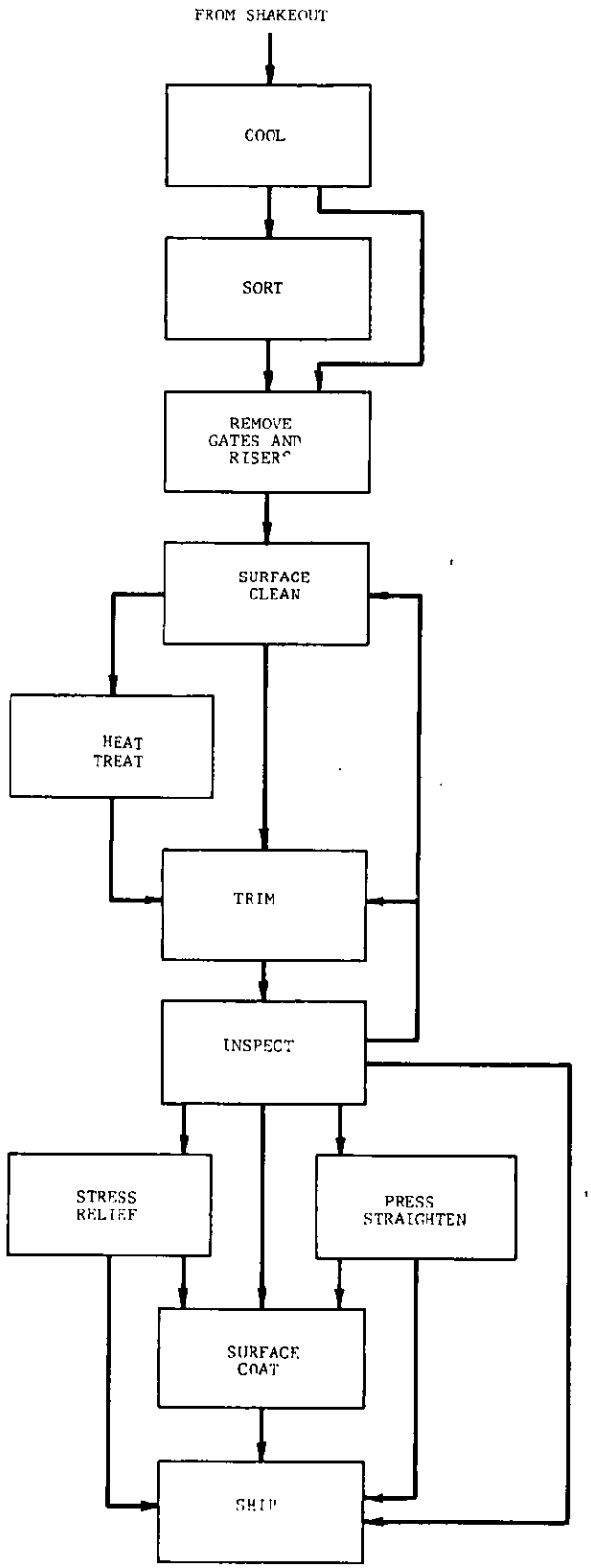

EXHIBIT III-23

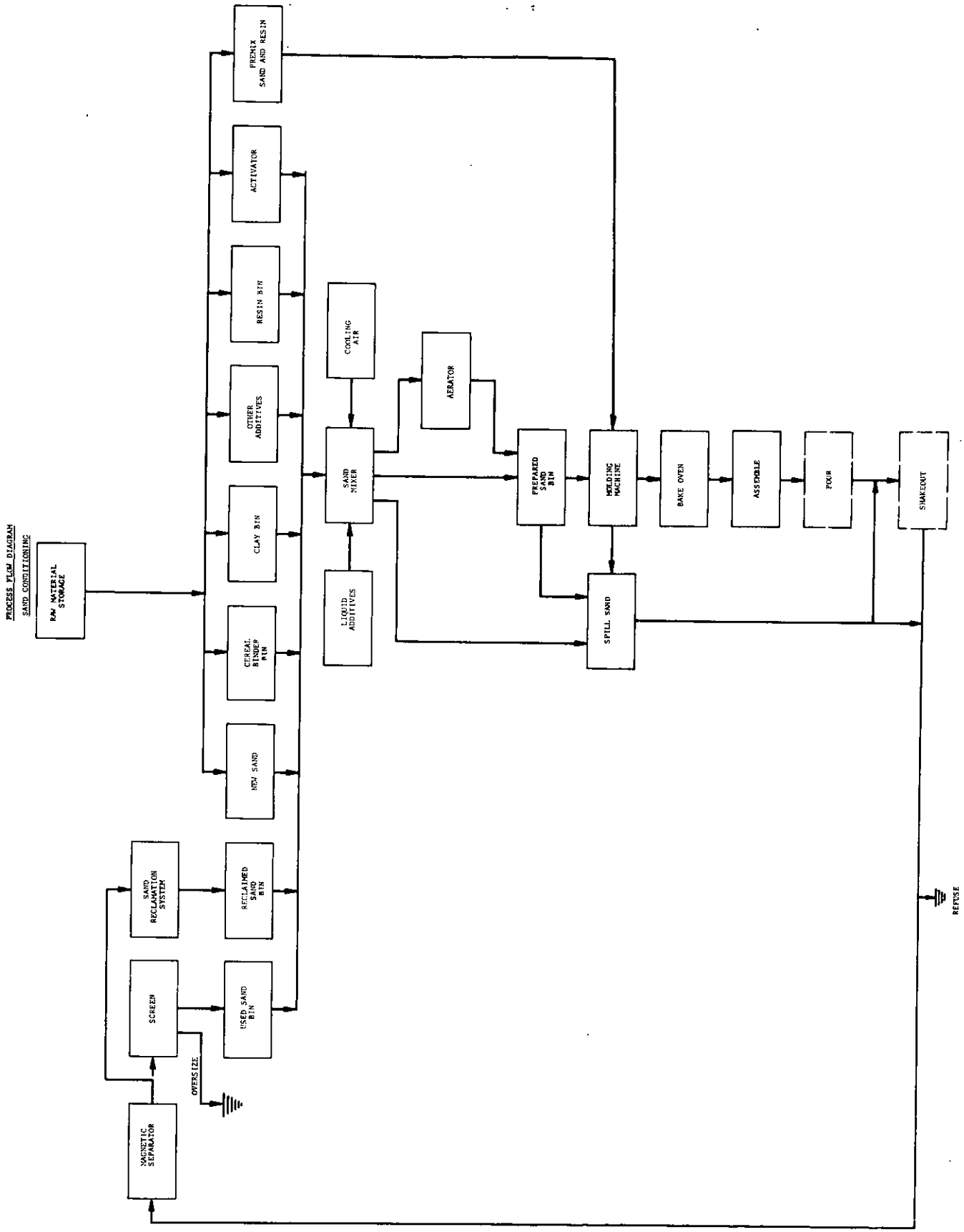

PROCESS FLOW DIAGRAM

CORE MAKING

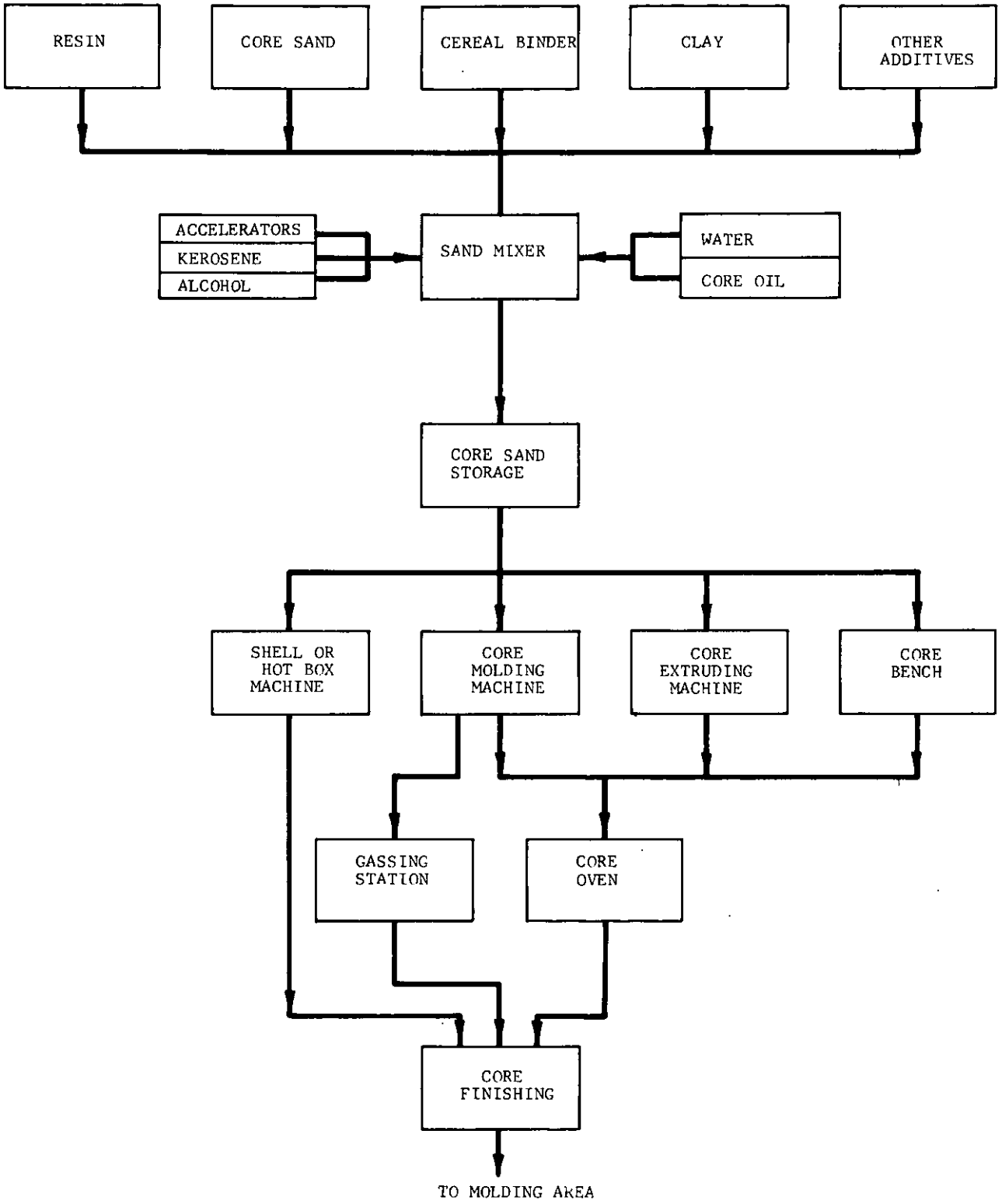

CHARACTERISTICS AND SOURCES OF EMISSIONS
IN VARIOUS FOUNDRY DEPARTMENTS

DEPARTMENT	OPERATION	EMISSIONS		
		TYPE	CONCENTRATION	PARTICLE SIZE (Microns)
RAW MATERIAL STORAGE AND CHARGE MAKEUP	Store metal scrap, coke, limestone, dolomite, fluorspar, silica sand.	Dust: Coke, limestone and sand.	3 to 5gr./cu.ft. Moderate	Fine to coarse 30 to 1,000
	Centrifuge or heat metal borings and turnings to remove cutting oil	Oil vapors Smoke Unburned hydrocarbons	Light Light Light	.03 to 1 .01 to .4
	Weigh charge materials	Coke dust Limestone dust	3 to 5gr./cu.ft. Moderate	Fine to coarse 30 to 1,000
MELTING	Cupola furnace melting	Fly ash, dust Coke breeze Smoke Metallic oxides Sulfur compounds Oil vapors Carbon monoxide	.2 to 5gr./cu.ft. 5gr./cu.ft. & up Heavy Moderate to heavy Light Light Heavy	8 to 20 Fine to coarse .01 to .4 To .7 .03 to 1 -
	Electric furnace melting	Smoke Metallic oxides Oil vapors	Heavy Moderate Heavy	.01 to .4 To .7 .03 to 1
	Induction furnace melting	Oil vapors, metallic oxides		
	Reverberatory (Air) furnace	Smoke Oil vapors Metallic oxides Fly ash, sulfur compounds	Moderate Moderate Moderate .2 to 5gr./cu.ft.	.01 to .4 .03 to 1 To .7 8 to 20
	Furnace charge preheating or drying	Smoke, dust Oil vapors Metallic oxides Metallic oxides	Light to heavy Light to heavy 1.24#/ton .41#/ton	.01 to .4 .03 to 1 75%-5 to 60 bottom fired 0 to 20 top fired
	Holding furnaces	Iron oxide Oil vapor	Light Light	Fine to medium .03 to 1
	Duplexing furnaces	Oil vapor Metallic oxides	Light Light	.03 to 1 To .7
	Inoculation	Metallic oxides	Heavy	To 0.7
MOLDING, POURING AND SHAKEOUT	Molding	Dust, mist Vapor	Light	Coarse

CHARACTERISTICS AND SOURCES OF EMISSIONS
IN VARIOUS FOUNDRY DEPARTMENTS

DEPARTMENT	OPERATION	EMISSIONS		
		TYPE	CONCENTRATION	PARTICLE SIZE (Microns)
MOLDING, POURING AND SHAKEOUT (Cont'd)	Pouring			
	Gray and ductile iron	Core gases	Heavy	
	Malleable	Facing fumes	Heavy	
		Metallic oxides	Light	Fine to medium
		Fluoride fumes	Heavy	
		Magnesium oxide fumes	Heavy	.01 to .4
		Synthetic binder Smoke and fumes	Moderate to heavy	
	Shakeout	Dust	3 to 5gr./cu.ft.	50%-2 to 15
		Smoke	Heavy	.01 to .4
		Steam	Heavy	
CLEANING AND FINISHING	Abrasive cleaning	Dust	3gr./cu.ft.& up	50%-2 to 15
	Grinding	Metal dust	5gr./cu.ft.& up	Above 7
		Sand dust	3 to 5gr./cu.ft.	Fine to medium
		Abrasive dust	.5 to 2gr./cu.ft.	50%-2 to 7
		Wheel bond material	Light	Fine
		Vitrified resins	Light	50%-2 to 15
	Annealing and heat treating	Oil vapors, gas products of combustion		.03 to 1
	Painting	Solvent vapors		
	Spray and dip	Paint spray carry-over	.5 to 2gr./cu.ft.	50%-2 to 7
		Water spray carry-over		
SAND CONDITIONING	New sand storage	Dust	3 to 5gr./cu.ft.	50%-2 to 15
	Sand handling system	Dust	3 to 5gr./cu.ft.	50%-2 to 15
		Steam		
	Screening	Dust	3 to 5gr./cu.ft.	50%-2 to 15
	Mixing	Dust	3 to 5gr./cu.ft.	50%-2 to 15
		Flour	Moderate	Fine to medium
		Bentonites	Moderate	Fine to medium
		Sea coal	Moderate	Fine to medium
		Cellulose	Moderate	Fine to medium
	Drying and reclamation	Dust	1/2 to 2gr./cu.ft.	50%-7 to 15
		Core gases		.03 to 1

CHARACTERISTICS AND SOURCES OF EMISSIONS
IN VARIOUS FOUNDRY DEPARTMENTS

DEPARTMENT	OPERATION	EMISSIONS		
		TYPE	CONCENTRATION	PARTICLE SIZE (Microns)
COREMAKING	Sand storage	Dust Flour Binders	Heavy 3 to 5gr./cu.ft.	Fine 50%-7 to 15
	Coremaking	Resin dust Sand dust	Heavy Light	Fine to medium Fine to medium
	Baking	Vapors, gases Smoke	-	-

CHEMICAL COMPOSITION OF CUPOLA PARTICULATE EMISSIONS

Foundry Number	Percent by Weight in Cupola Effluent								
	Iron Oxide	Magnesium Oxide	Manganese Oxide	Lead Oxide	Aluminum Oxide	Zinc Oxide	Silicon Dioxide	Calcium Oxide	Combustibles
66	11.1%						12.3%		
85	14.7	1.3%		1.4%			28.7		24.0%
90							56.3	42.0%	0.9
113	8.6		3.7%		.05%		31.8	3.1	27.0
116	10.0	5.0	10.0		5.0	1.0%	10.0	3.0	5.0
146	33.0		1.0	5.0		38.0	20.0	1.0	
150	11.6	1.0	5.5	20.0	1.4	14.7	30.1	1.1	

Note: Quantities as reported. They do not add up to 100%.

EXHIBIT IV-2

PARTICLE SIZE DISTRIBUTION-CUPOLA EMISSIONS

Foundry	Cumulative Percent by Weight Diameter in Microns -1	-2	-5	-10	-20	-50	-100	-200
9		30%	50%	65%	82%	90%	99%	
14		64	82	98	99			
18			2	12	34	92	99	99%
26		13	28	45	55	60		
32			54	86	98	99	99	99
67			14	15	15	21	99	
67					19	25	99	
146						99	99	
151		0.6	2	3	8	99	99	
A[1]			4	5.5	7	13.7	75	80
B[1]			11	13	32	53	75	94
C[1]			8	12	17	28	69	89
1[2]			18	25	38	62		
2[2]			17	26	36	53		
3[2]			24	28	23	42		
4[2]			26	30	32	44		
A[2]	0	7	25	32	34	41	56	61
B[2]	0	7	24	41	47	32	69	81

Sources:

1. The Cupola and Its Operation, Third Edition, 1965, American Foundrymen's Society, p. 82.

2. Air Pollution Engineering Manual, Public Health Service Publication, No.999-AP-40, 1967 Department of Health, Education, and Welfare.

EXHIBIT IV-4

PARTICULATE EMISSIONS
VS. SPECIFIC BLAST RATE
FOR ACID LINED CUPOLAS

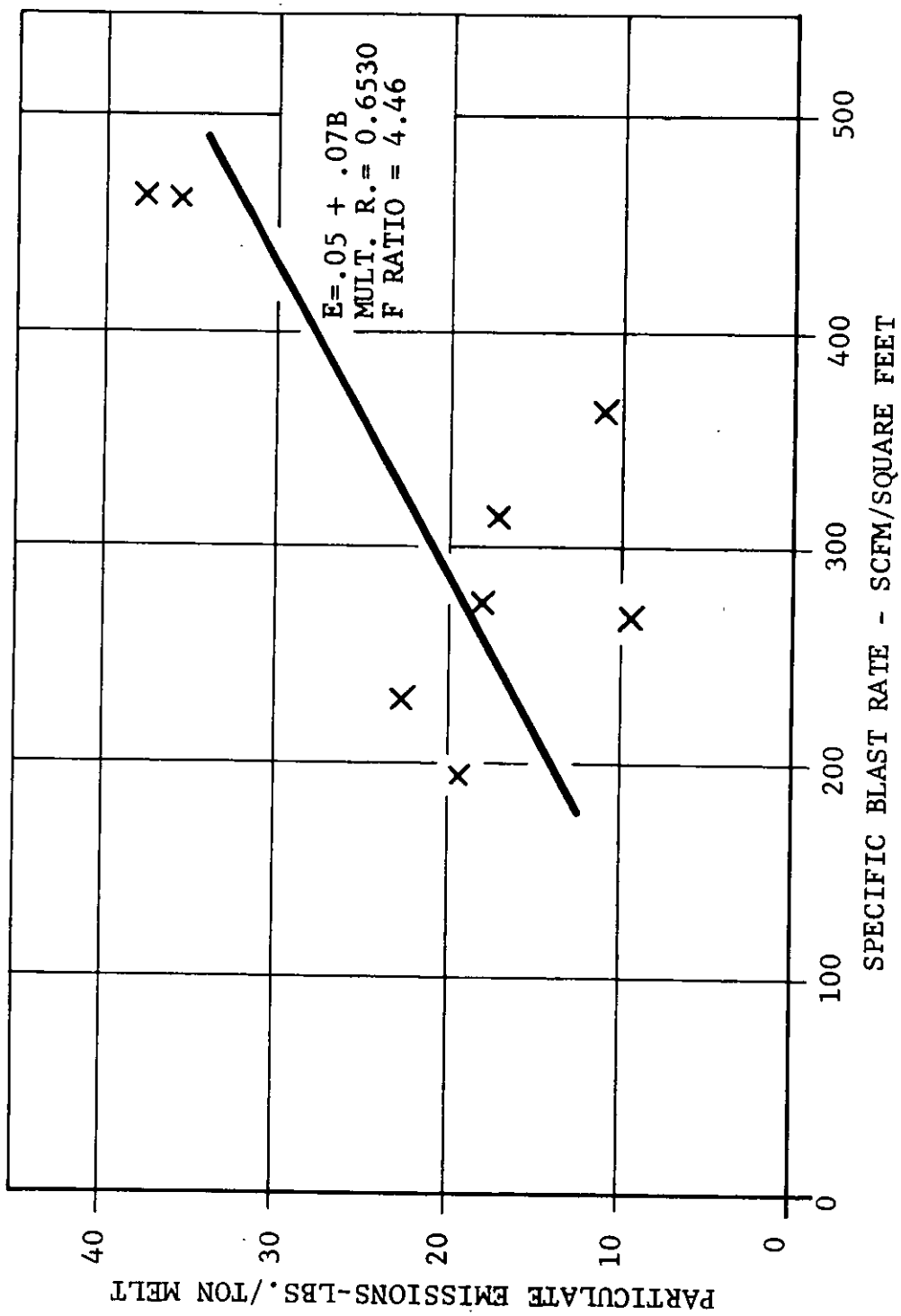

EXHIBIT IV-5

EFFECT OF SPECIFIC BLAST RATE AND COKE RATE ON PARTICULATE EMISSIONS FROM UNLINED CUPOLAS

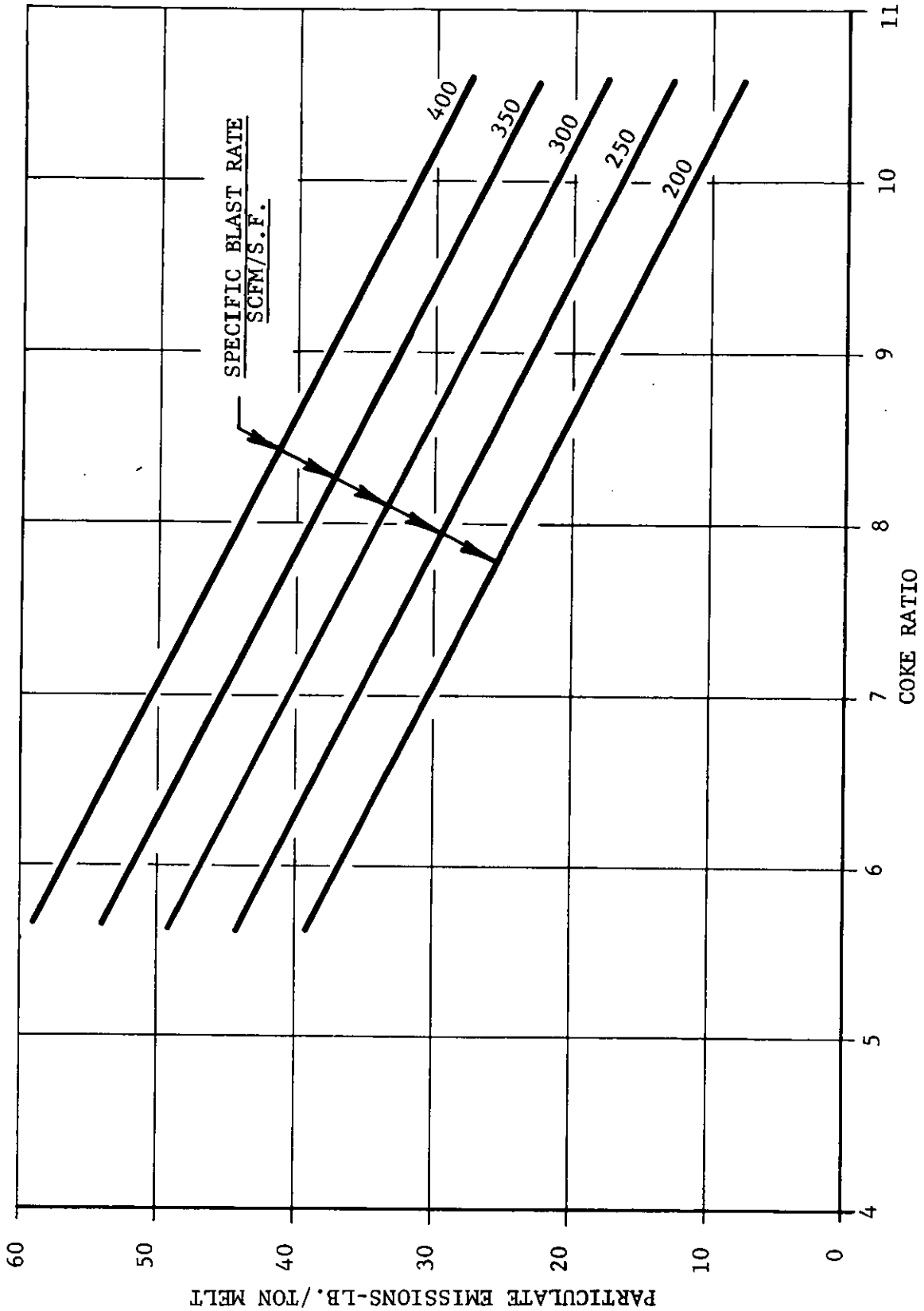

SIZE DISTRIBUTION FOR THREE ELECTRIC ARC INSTALLATIONS

Particle Size Distribution, Microns	Foundry A*	Foundry B	Foundry C
Less than 1	5%	8%	18%
Less than 2	15	54	61
Less than 5	28	80	84
Less than 10	41	89	91
Less than 15	55	93	94
Less than 20	68	96	96
Less than 50	98	99	99

Note: *Foundry A provided an agglomerated sample and is, therefore, less representative.

CHEMICAL ANALYSIS OF ELECTRIC ARC EMISSIONS

Oxides	Foundry A	Foundry B	Foundry C
Iron	75%-85%	75%-85%	75%-85%
Silicon	10	10	10
Magnesium	2	0.8	1
Manganese	2	2	2
Lead	1	2	0.5
Aluminum	0.5	1	0.5
Calcium	0.3	0.2	0.8
Zinc	0.2	2.	0.3
Copper	0.04	0.03	0.01
Lithium	0.03	0.03	0.03
Tin	0.03	0.3	0.02
Nickel	0.02	0.03	0.01
Chromium	0.02	0.07	0.02
Barium	0.02	0.07	0.01
Loss on Ignition	8.87	3.1	0
Ash	91.93	96.9	100

EXHIBIT IV-7

EMISSIONS DATA FROM ELECTRIC ARC MELTING FURNACES

Number	Furnace Shell Diameter Feet	Furnace Charge Tons	Furnace Cycle Hours	Emissions Produced Lb/Ton Charge
1	11.0	15	1.15	12.0(Est.)
2	12.0	20	1.5	6.0
3	8.0	5	1.0	20.0
4	12.0	20	2.5	18.3
5	7.0	3	1.75	10.0
6	12.0	25	4.0	4.0
7	8.0	5	1.0	40.0
8	7.0	3	1.75	12.7
9	7.0	2	2.0	10.7
10	7.0	2	1.3	13.4
11	7.0	3	2.0	5.3
12	9.0	6	2.3	15.3
13	9.0	6	2.0	12.8
14	11.0	18	3.0	6.1
15	9.0	6	1.2	29.4
16	9.0	6	1.75	12.7
17	8.0	4	2.0	11.0
18	11.0	14	1.75	7.5
19	12.0	19	1.7	15.0

Sources:
- 1- 4 Foundry Visits
- 5- 9 AFS Foundry Air Pollution Manual
- 10-19 Los Angeles Air Pollution Manual

RELATIONSHIP BETWEEN RATE OF EMISSIONS
AND HEAT CYCLE FOR ELECTRIC ARC MELTING

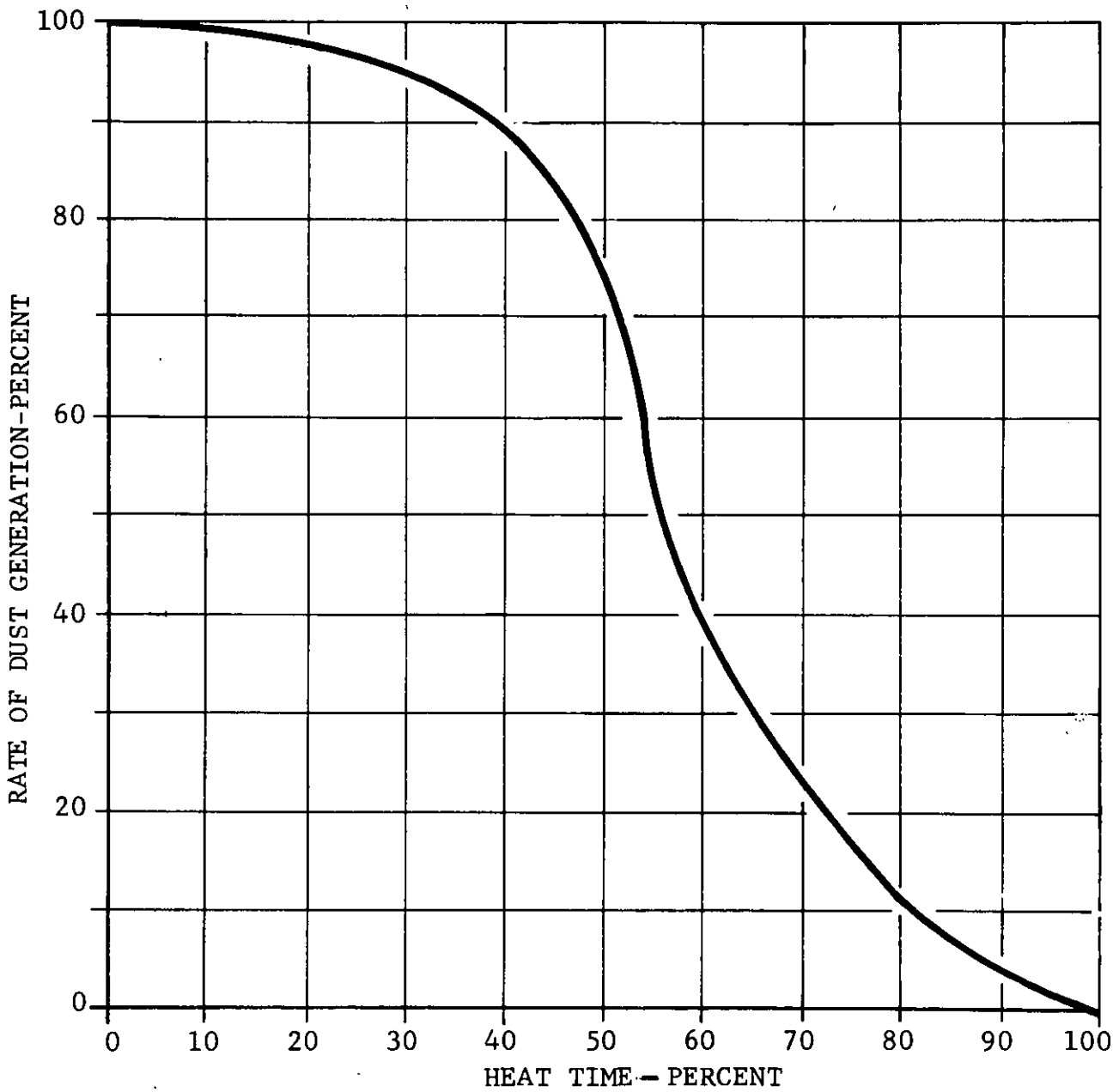

Source: Coulter, 1954, Los Angeles Air Pollution Manual.

TREATMENT AGENTS FOR PRODUCING DUCTILE IRON

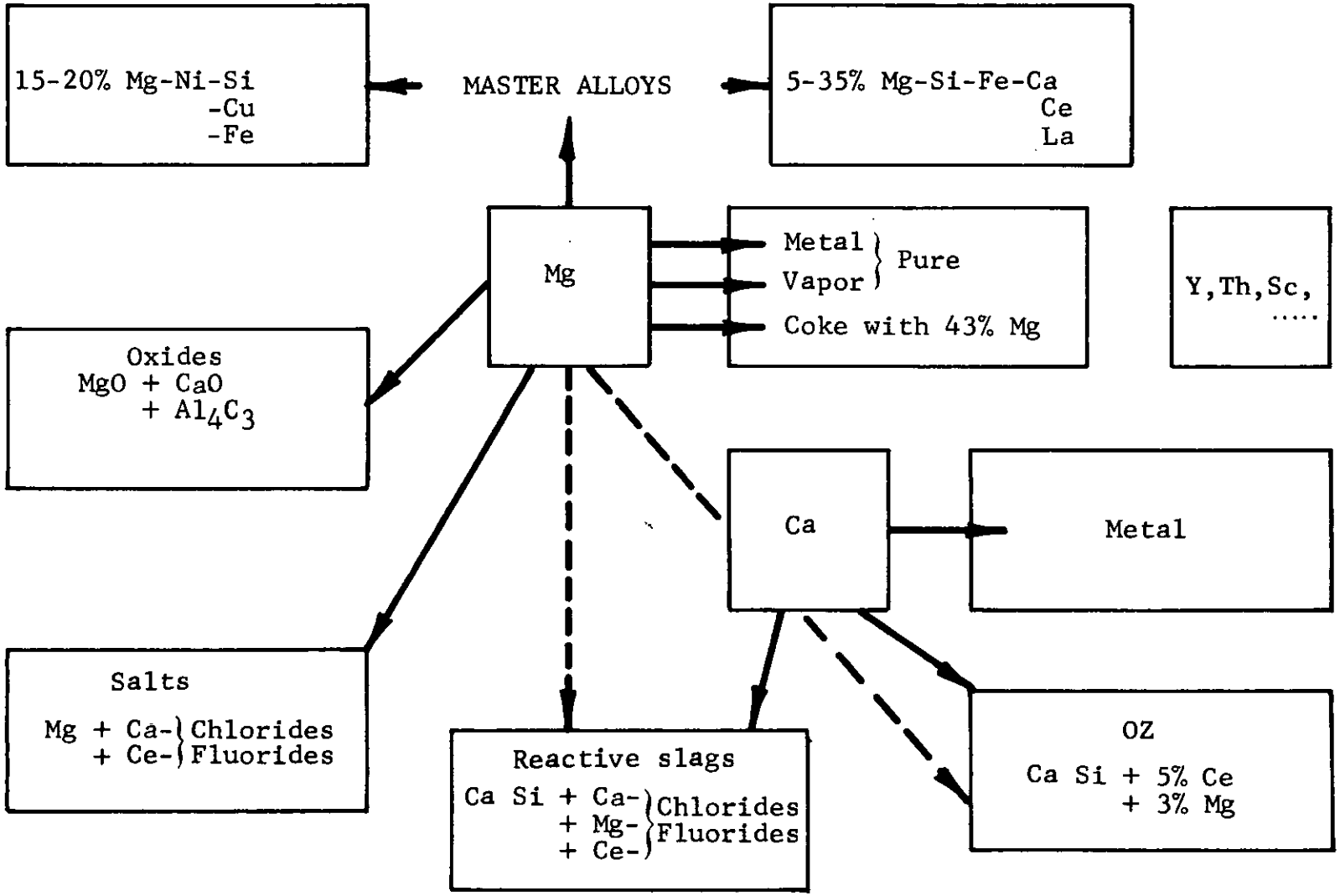

Source: Modl, Comparing Processes for Making Ductile Iron, Foundry, July, 1970.

EXHIBIT IV-9

Molding Sand Gas Analyses

Sand Composition	A 4% Bentonite Oven Dried	B 4% Bentonite 2.5% H_2O	C 4% Bentonite 5% Water	D 4% Bentonite 1% Cereal Dried	E 4% Bentonite 1% Cereal 3.4% H_2O	F 1.5% Cereal Core Oil 1.0% Kerosene 1.0% Dried
CO_2	4.9	3.3	2.0	6.5	2.8	5.0
O_2	9.2	6.2	2.9	7.4	1.7	5.2
CO	2.4	6.3	11.3	10.8	11.5	30.4
H_2	0.9	33.0	46.1	2.5	50.3	25.6
Paraffins	0	1.2	0	0.4	2.9	2.2
N_2	82.6	49.7	37.7	72.4	30.8	31.6
Percent O_2 of O_2+N_2	15.7	20.2	21.7	21.0	25.0	44.5
CO/CO_2	0.49	1.91	5.7	1.66	4.10	6.08
Percent C	7.3	9.6	13.3	17.3	14.3	35.4

Sand Composition	G 4% Cereal 4% Bentonite 4% Water	H 4% Cereal 4% Bentonite Dry	I Oil Drag	J Oil Check	K Oil Cope	L Steel Cavity & Sprue
CO_2	2.5	2.3	6.4	6.4	6.8	5.0
O_2	3.0	6.2	4.3	5.5	8.9	9.4
CO	30.5	28.7	7.9	11.1	2.5	4.1
H_2	46.0	24.8	2.6	7.5	0.6	0.5
Paraffins	4.6	0.6	0.1	0	0	0.2
N_2	13.2	37.4	78.7	69.5	81.2	80.8
Percent O_2 of O_2+N_2	63.0	39.0	15.7	17.4	17.2	16.9
CO/CO_2	12.2	12.5	1.23	1.73	.37	0.82
Percent C	33.0	31.0	14.3	17.5	9.3	9.1

Source: "Nature of Mold Cavity Gases," Locke & Ashbrook, AFS Transactions, 1950.

EXHIBIT IV-10

MOLDING SAND
GAS EVOLUTION AND HOT PERMEABILITY

Bond Clay Added	Percent Tempering Water	CC Gas Evolved per Gram of Sand: Gas from Dried Specimen 1/2 Minute	3 Minutes	7 Minutes	Steam O 212° F.	Total Gas 212° F.	1,800° F.	Cubic Feet Gas at 1,800° F. per Cubic Foot of Sand
		Washed and Dried Silica Sand plus Bond Clays						
5% Western Bentonite	2.5	.50	2.50	2.50	40.0	43.3	145.2	233.8
4% Southern Bentonite	2.5	3.50	3.50	3.50	41.5	46.1	154.9	247.8
11% Ohio fireclay	3.5	3.00	3.00	3.00	56.5	60.3	203.0	824.8
		Silica Sand Bonded with 5 Percent Western Bentonite and Other Binders						
1-10 Sea Coal (Vol.)	3.0	9.00	19.50	19.75	49.8	76.2	256.0	409.6
1-35 Pitch (Vol.)	2.9	4.25	7.50	7.50	48.2	58.2	195.5	312.8
1% Cereal Binder	3.4	7.25	9.50	9.50	56.5	69.0	231.8	370.9
1% Resin Binder	3.4	5.25	7.00	7.00	56.5	65.4	219.7	351.5
1% Special Binder A	3.5	4.25	7.00	7.00	58.0	67.3	220.0	381.6
1% Special Binder B	2.0	2.25	3.75	3.75	33.2	87.7	126.7	202.7
1% Dextrine	3.5	8.00	8.75	8.75	58.0	69.6	234.0	74.4
		Silica Sands Bonded with 5 Percent Western Bentonite and 1-10 Sea Coal Volume						
Washed and dried Ottawa	8.0	9.00	19.50	19.75	49.8	76.2	256.0	409.6
Western Michigan core sand	2.9	5.00	15.25	15.25	48.2	68.4	229.8	367.7
Michigan bank sand	2.8	10.25	25.00	25.50	46.5	80.3	270.0	432.0
		Gas Evolution from Sands in Actual Use						
Steel foundry-old sand	2.0	4.50	5.25	5.25	33.2	40.1	134.7	215.5
Steel foundry-facing sand	3.1	12.25	13.25	13.25	51.4	69.1	232.0	371.2
Malleable foundry-system sand	3.7	9.75	18.00	18.25	61.5	85.5	288.0	460.8
Malleable foundry-facing sand	3.8	18.25	27.75	27.75	63.0	99.4	334.0	534.4
Gray iron foundry-system sand	3.8	11.25	28.75	33.00	63.0	106.5	358.0	572.8
		Synthetic Sand vs. Naturally Bonded Sand						
95% Washed and dried Ottawa 5% Western Bentonite	2.5	.50	2.50	2.50	40.0	43.3	145.2	232.3
New Albany sand	4.8	9.00	11.00	11.00	78.0	93.3	314.0	502.4
New Ohio sand	7.8	11.00	15.25	15.25	124.8	145.0	480.5	778.3

Source: "Gas Developed in Molds," Dunbeck, Foundry, September, 1944.

EXHIBIT IV-11

EXHIBIT IV-12

GAS VOLUME EVOLVED AS A
FUNCTION OF VOLATILES
CONTAINED IN MOLDING SAND

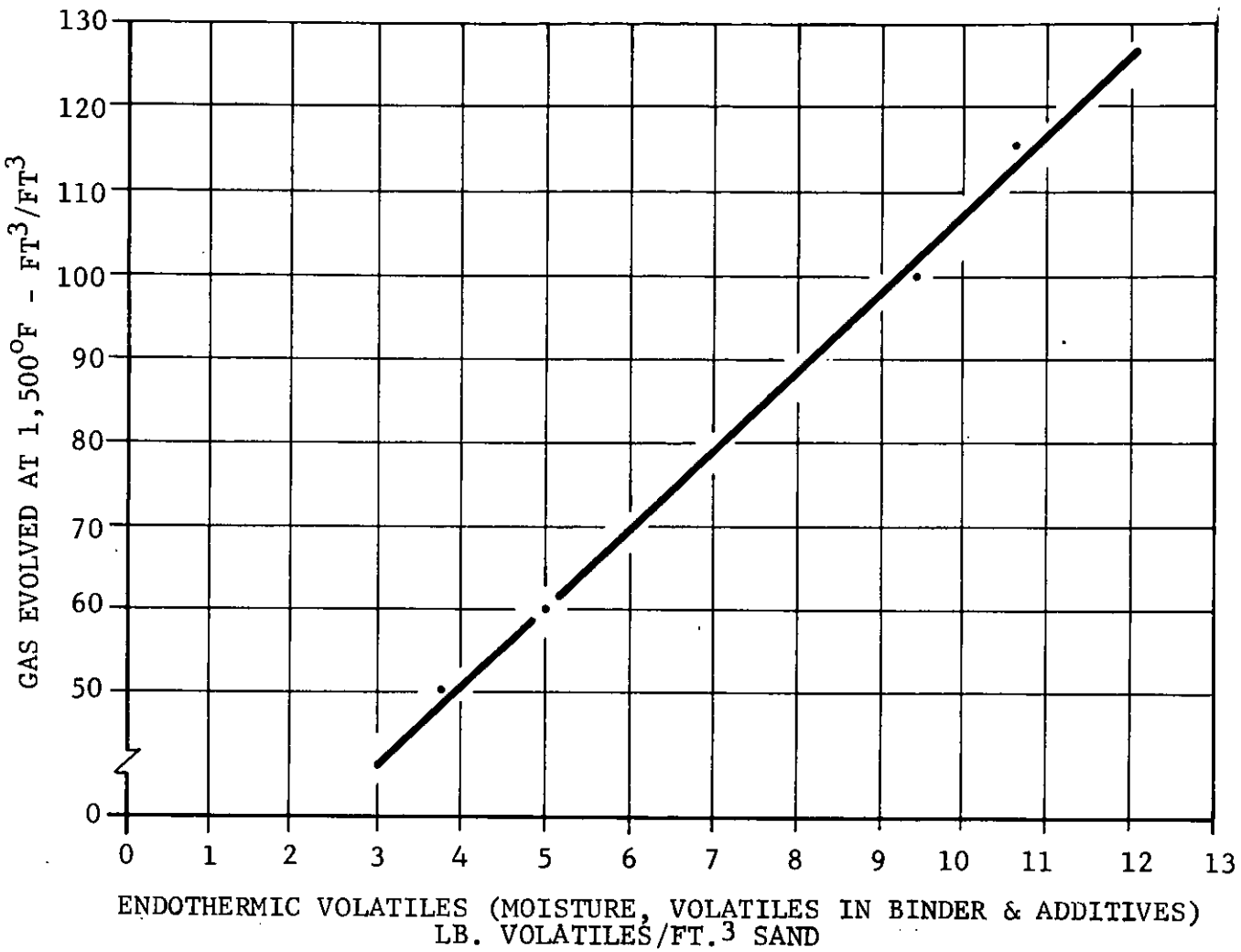

Note: Adapted from an article by F. Hoffman, "Property Changes and Conditioning of Repeatedly Circulating Foundry Sand Systems," Modern Casting, October, 1967.

EFFECT OF BAKING TIME ON
GAS GENERATED DURING POURING
FOR VARIOUS BAKING TEMPERATURES

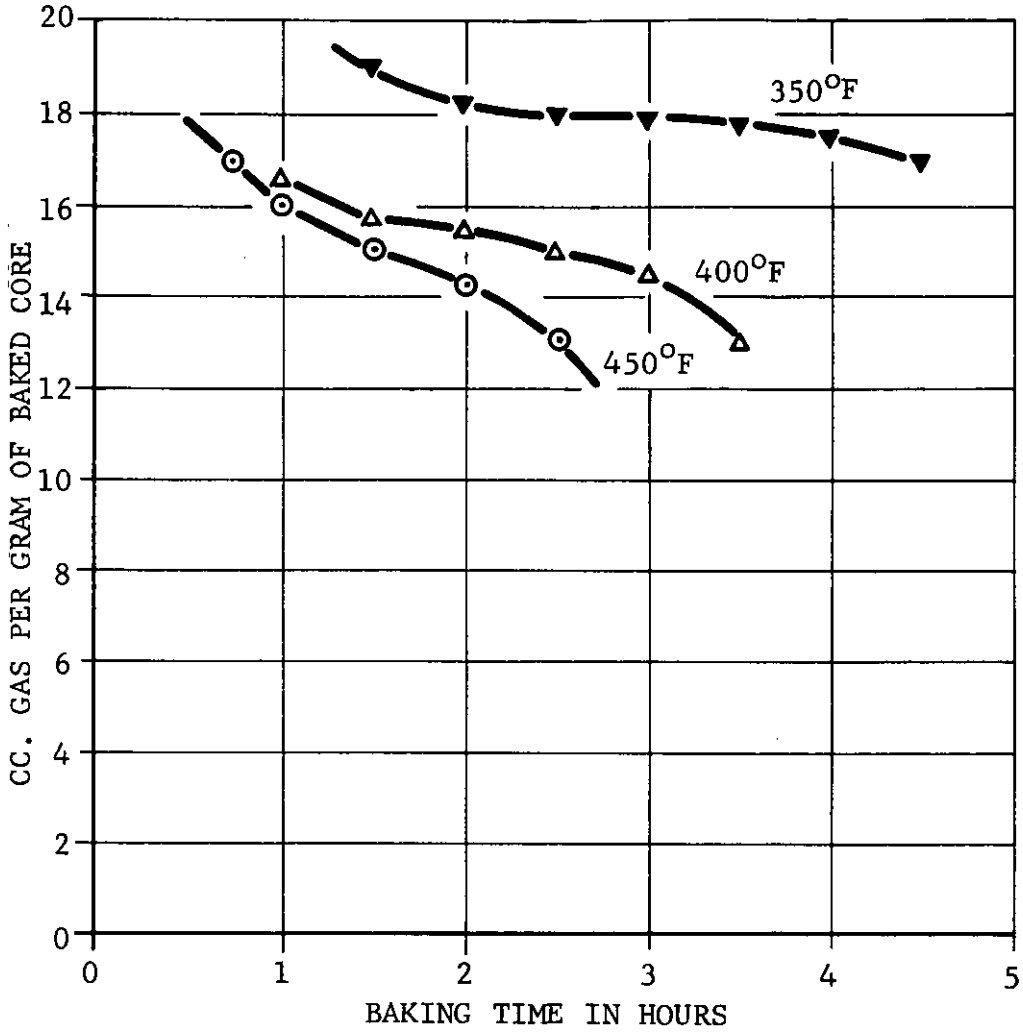

Note: Adapted from Foundry Core Practice by H. Dietert, 1966, p. 172.

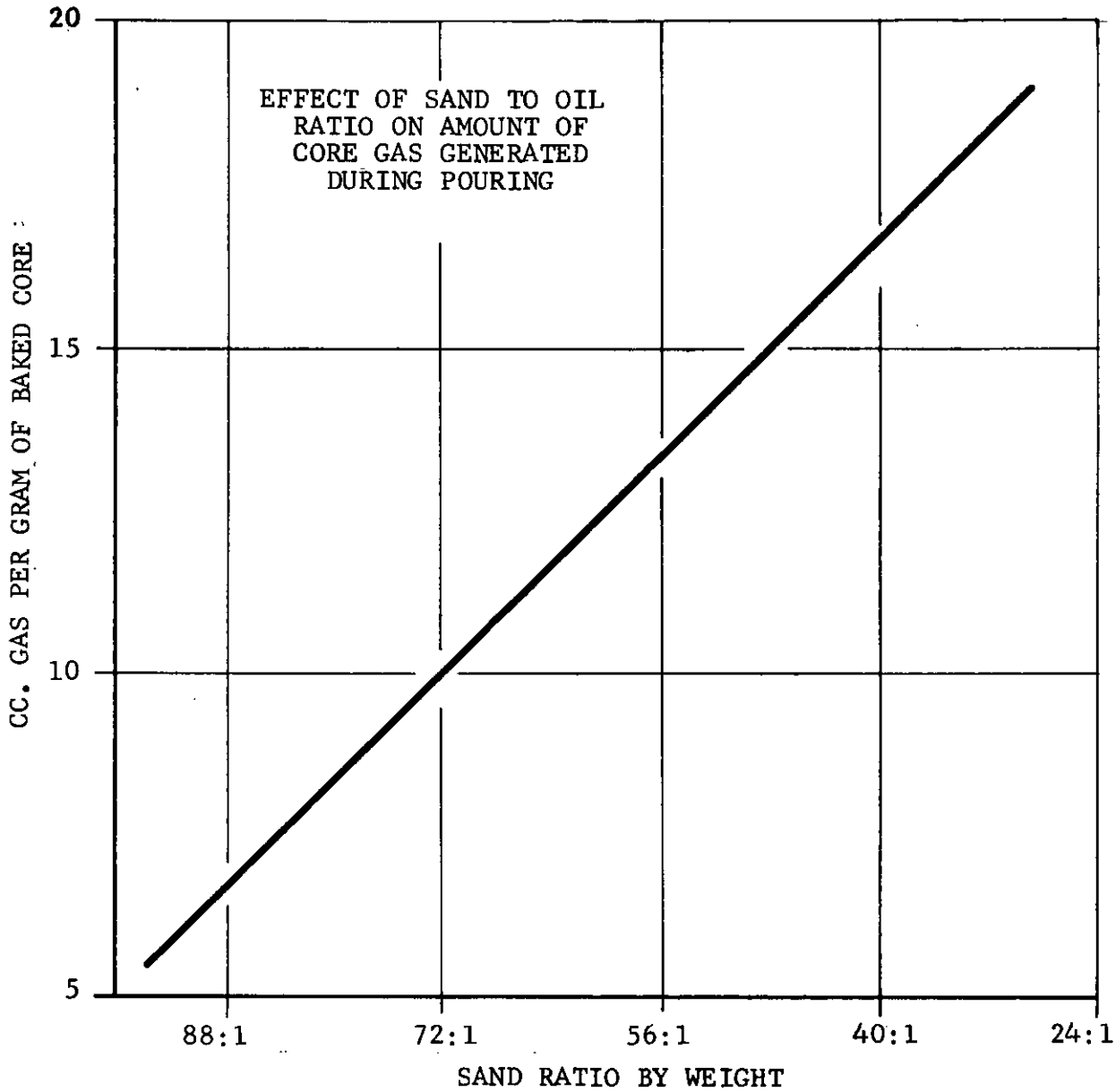

Source: Foundry Core Practice, H. Dietert, 1966.

INVENTORY OF IRON FOUNDRY EMISSIONS
FROM MELTING OPERATIONS, 1969

Region	Castings Production Tons (1)	Molten Iron Production Tons (1)	Total Particulate Emissions Generated, Tons (3)	Carbon Monoxide Generated, Tons (3)	Particulate Emissions Emitted, Tons (4)	Carbon Monoxide Emitted, Tons (5)
New England Maine New Hampshire Vermont Massachusetts Rhode Island Connecticut	235,000	362,000	3,800	49,000	2,800	24,500
Middle Atlantic New York New Jersey Pennsylvania	3,501,000	5,143,000	51,000	594,000	38,000	297,000
East N. Central Ohio Indiana Illinois Michigan Wisconsin	8,225,000	12,613,000	126,000	1,541,000	94,500	770,500
West N. Central Minnesota Iowa Missouri Nebraska Kansas N. Dakota S. Dakota	607,000	881,000	9,100	115,000	6,800	57,500
South Atlantic Delaware Maryland Virginia W. Virginia N. Carolina S. Carolina Georgia Florida	473,000	662,000	6,800	88,000	5,100	44,000
East S. Central Kentucky Mississippi Alabama Tennessee	2,300,000	2,887,000	27,700	304,000	20,800	152,000
West S. Central Arkansas Louisiana Oklahoma Texas	531,000	748,000	7,700	100,000	5,800	50,000
Mountain Montana Colorado Arizona Nevada (2) Idaho New Mexico (2) Wyoming (2)	243,000	332,000	3,300	38,000	2,500	19,000
Pacific Washington Oregon California Hawaii Alaska	499,000	739,000	7,600	95,000	5,700	47,500
Total	16,614,000	24,367,000	243,000	2,924,000	182,000	1,462,000

Notes: (1) Castings and molten iron production quantities from cupolas and electric arc furnaces only.

(2) No iron foundries are located in Nevada, New Mexico, and Wyoming.

(3) Particulate emissions and carbon monoxide generated are the estimated maximum produced.

(4) Particulate emissions emitted are estimated at 75% of maximum produced, with an average 25% being collected.

(5) Carbon monoxide emitted is estimated at 50% being burned and 50% released to the atmosphere.

INVENTORY OF IRON FOUNDRY EMISSIONS
FROM NON-MELTING OPERATIONS, 1969

Region	Castings Production Tons	Molten Iron Production Tons	Total Particulate Emissions Generated Tons	Particulate Emissions Emitted Tons
New England Maine New Hampshire Vermont Massachusetts Connecticut	239,000	368,000	21,000	1,100
Middle Atlantic New York New Jersey Pennsylvania	3,643,000	5,603,000	319,400	16,200
East North Central Ohio Indiana Illinois Michigan Wisconsin	8,453,000	13,001,000	741,100	37,700
West North Central Minnesota Iowa Missouri Nebraska North Dakota South Dakota	677,000	1,041,000	59,300	3,000
South Atlantic Delaware Maryland Virginia West Virginia North Carolina South Carolina Georgia Florida	485,000	746,000	42,500	2,200
East South Central Kentucky Mississippi Alabama Tennessee	2,327,000	3,579,000	204,000	10,400
West South Central Arkansas Louisiana Oklahoma Texas	551,000	847,000	48,300	2,500
Mountain Montana Colorado Arizona Nevada (1) Idaho New Mexico (1) Wyoming (1)	249,000	383,000	21,800	1,100
Pacific Washington Oregon California Hawaii Alaska	531,000	817,000	46,600	2,400
Total	17,155,000	26,385,000	1,504,000	76,600

Note: (1) No iron foundries are located in Nevada, New Mexico, and Wyoming.

EXHIBIT IV-17

APPLICATION OF EMISSION CONTROL EQUIPMENT SYSTEMS TO FOUNDRY PROCESSES

Foundry Process	Dry Mechanical		Wet Scrubber				Fabric Filter				Electrostatic Precipitator		Catalytic Combustion
	Low Pressure Loss Cyclone	Medium Pressure Loss	Low Pressure Loss (Wet Cap)	Medium Pressure Loss "4-8"	Intermediate Pressure Loss "9-20"	High Pressure Loss "21-80"	Cotton or Wool	Orlon or Dacron	Nomex	Glass	Dry	Wet	
Raw Material Handling and Preparation	No	Rare	No	Rare	No	No	Rare	No	No	No	No	No	No
Melting Processes													
Cupola	Rare	Frequently	Frequently	Frequently	Frequently	Frequently	No	Rare	Occasionally	Frequently	Rare	No	No
Electric Arc	No	No	No	No	Rare	Occasionally	Rare	Usual	Rare	No	Rare	No	No
Electric Induction	No	No	No	No	No	No	No	No	No	No	No	No	No
Inoculation	No	No	No	Rare	Rare	Rare	Occasionally	Rare	Rare	No	No	No	No
Mold Pouring & Cooling	No	No	No	Rare	No	No	No	No	No	No	No	No	No
Shakeout													
Enclosed Hood	Rare	Occasionally	No	Usual	Occasionally	No	Occasionally	No	No	No	No	No	No
Side Hood	No	Rare	No	Usual	Occasionally	No	Occasionally	No	No	No	No	No	No
Sand Preparation & Handling													
Shakeout Molding Sand	Rare	Occasionally	No	Usual	Rare	No	Rare	No	No	No	No	No	No
New Sand	Rare	Occasionally	No	Usual	Rare	No	Occasionally	No	No	No	No	No	No
Core Sand	Rare	Occasionally	No	Usual	Rare	No	Occasionally	No	No	No	No	No	No
Coremaking													
Mechanical Material Handling	Rare	Rare	No	Frequently	No	No	Frequently	No	No	No	No	No	No
Pneumatic	No	No	No	Rare	No	No	Usual	No	No	No	No	No	No
Bake Oven	No	No	No	No	No	No	No	No	No	No	No	No	Frequently
Grinding	Rare	Occasionally	No	Frequently	No	No	Frequently	No	No	No	No	No	No
Casting Cleaning													
Airless Abrasive	No	Rare	No	Frequently	No	No	Usual	No	No	No	No	No	No
Blast Rooms	No	Rare	No	Usual	?	No	Usual	No	No	No	No	No	No
Tumbling Mills	No	Rare	No	Usual	?	No	Usual	No	No	No	No	No	No
Sprue	No	Occasionally	No	Usual	?	No	Usual	No	No	No	No	No	No
Grinding													
Snagging	Frequently	Frequently	No	Frequently	No	No	Frequently	No	No	No	No	No	No
Swing Frame	Rare	Frequently	No	Frequently	No	No	Frequently	No	No	No	No	No	No
Portable	Rare	Frequently	No	Usual	No	No	Usual	No	No	No	No	No	No
Boiler Fly Ash													
Chain Grate	No	Occasionally	No	No	No	No	No	No	No	No	No	No	No
Spreader Stoker	No	Usual	No	No	No	No	No	No	No	No	No	No	No
Pulverizer	No	Usual	No	No	No	No	No	No	No	No	Frequently	No	No
Paint Ovens	No	No	No	No	No	No	No	No	No	No	No	No	Frequently
Oil Burn-off Furnaces	No	No	No	Rare	No	No	No	No	No	No	No	No	Frequently
Pattern Shop													
Wood	Usual	Rare	No	Rare	No	No	Occasionally	No	No	No	No	No	No
Metal	Frequently	Usual	No	Rare	No	No	Occasionally	No	No	No	No	No	No

Sources: Foundry Air Pollution Control Manual, American Foundrymen's Society, 1967.
American Air Filter, Dust Collector Selection Guide, Bulletin 268-A, October, 1966.
Personal notes of John Kane.

GEOGRAPHICAL DISTRIBUTION OF IRON FOUNDRIES

	Gray Iron				Ductile Iron				Malleable			
	1969	1967	1965	1963	1969	1967	1965	1963	1969	1967	1965	1963
Alabama	56	56	59	65	17	16	17	12	2	3	2	2
Alaska	1	-	-	-	-	-	-	-	-	-	-	-
Arizona	4	3	3	4	1	-	-	-	-	-	-	-
Arkansas	10	11	10	10	1	1	1	1	-	-	-	-
California	88	86	95	102	29	23	24	23	1	1	1	4
Colorado	15	17	18	20	4	3	4	3	-	-	-	1
Connecticut	24	23	24	29	7	6	6	5	4	5	5	5
Delaware	1	2	2	2	-	-	-	-	-	-	-	-
District of Columbia	-	-	1	1	-	-	1	1	-	-	-	-
Florida	17	19	19	20	3	3	2	2	-	-	-	-
Georgia	32	29	32	35	8	6	6	7	-	-	-	-
Hawaii	3	4	3	3	-	-	-	-	-	-	-	-
Idaho	4	4	4	4	1	1	1	1	-	-	-	-
Illinois	97	104	107	113	32	31	29	28	9	10	11	11
Indiana	75	81	75	84	16	12	12	11	4	4	4	5
Iowa	36	37	38	43	8	6	5	5	1	2	1	2
Kansas	24	22	22	23	9	6	7	7	-	-	-	-
Kentucky	11	15	16	16	2	1	-	-	-	-	-	-
Louisiana	10	10	16	13	2	2	2	1	-	-	-	-
Maine	8	8	8	9	1	-	-	-	-	-	-	-
Maryland	13	12	13	14	5	3	2	2	1	1	1	1
Massachusetts	53	56	57	67	13	9	9	7	3	3	5	3
Michigan	114	122	127	133	36	32	28	28	7	8	6	6
Minnesota	36	35	35	38	8	5	4	3	2	1	1	1
Mississippi	7	7	8	8	-	-	-	-	-	-	-	1
Missouri	28	30	29	33	6	5	3	4	-	-	1	2
Montana	2	2	2	4	-	-	-	-	-	-	-	-
Nebraska	7	8	8	8	1	-	-	-	-	-	-	-
Nevada	1	1	1	1	-	-	-	-	-	-	-	-
New Hampshire	8	5	4	8	2	1	-	-	1	1	1	1
New Jersey	45	44	48	56	12	10	10	9	2	1	1	2
New Mexico	-	1	2	1	-	-	-	-	-	-	-	-
New York	82	88	97	103	17	16	19	17	9	7	10	7
North Carolina	30	33	36	41	7	5	4	6	-	-	-	-
North Dakota	3	2	2	2	-	-	-	-	-	-	-	-
Ohio	151	162	159	163	61	52	46	46	16	18	16	18
Oklahoma	17	14	14	17	12	6	6	5	-	-	-	-
Oregon	13	16	17	16	5	7	7	6	-	-	-	1
Pennsylvania	155	183	189	198	48	43	41	34	16	14	13	14
Rhode Island	8	9	9	10	2	1	1	2	1	1	1	1
South Carolina	15	16	15	17	4	5	5	2	-	-	-	-
South Dakota	1	2	2	3	-	-	-	-	-	-	-	-
Tennessee	41	45	48	52	7	8	7	5	1	-	-	-
Texas	56	63	61	68	18	17	11	8	1	1	1	2
Utah	11	9	10	10	5	4	5	5	-	-	1	-
Vermont	8	8	10	10	1	-	-	-	-	-	-	1
Virginia	33	34	37	37	7	5	5	3	-	-	-	-
Washington	21	21	23	23	8	7	6	5	1	1	1	1
West Virginia	12	12	12	13	5	4	2	2	1	1	1	1
Wisconsin	84	82	85	87	28	25	23	22	10	10	11	11
Wyoming	-	-	-	-	-	-	-	-	-	-	-	-
Total United States	1,571	1,653	1,712	1,837	459	387	361	328	93	93	95	104

Source: Foundry Magazine Census of Foundries.

EXHIBIT II-2

SUMMARY STATISTICS - AIR POLLUTION CONTROL EQUIPMENT ON GRAY IRON FOUNDRY MELTING FURNACES
(Number of Foundries)

Group by Size (1967 Value of Gray Iron Shipments)	Type of Furnace				
	Cupola	Electric Arc	Electric Induction	Other	Total
Total respondent foundries	1,232	42	73	29	1,376
Under $500,000	525	20	34	25	604
$500,000 to $999,999	223	4	11	2	240
$1,000,000 to $2,499,999	221	10	16	-	247
$2,500,000 to $9,999,999	172	3	5	-	180
$10,000,000 and over	29	3	4	1	37
Value not reported	62	2	3	1	68
Total respondent foundries without furnace air pollution control equipment	1,052	18	73	29	1,172
Under $500,000	514	11	34	25	584
$500,000 to $999,999	200	-	11	2	213
$1,000,000 to $2,499,999	178	4	16	-	198
$2,500,000 to $9,999,999	107	-	5	-	112
$10,000,000 and over	7	1	4	1	13
Value not reported	46	2	3	1	52
Total respondent foundries with furnace air pollution control equipment	180	24	-	-	204
Under $500,000	11	9	-	-	20
$500,000 to $999,999	23	4	-	-	27
$1,000,000 to $2,499,999	43	6	-	-	49
$2,500,000 to $9,999,999	65	3	-	-	68
$10,000,000 and over	22	2	-	-	24
Value not reported	16	-	-	-	16
Type of equipment					
Wet Cap	95	-	-	-	95
Fabric filter	39	20	-	-	59
Particulate wet scrubber	30	4	-	-	34
Mechanical collector (Cyclone)	15	-	-	-	15
Electrostatic precipitator	1	-	-	-	1

SUMMARY STATISTICS - AIR POLLUTION CONTROL EQUIPMENT ON GRAY IRON FOUNDRY MELTING FURNACES
(Number of Foundries)

Group by Census Regions	Type of Furnace				
	Cupola	Electric Arc	Electric Induction	Other	Total
Total respondent foundries	1,232	42	73	29	1,376
New England	87	-	4	4	95
Middle Atlantic	229	4	11	3	247
East North Central	428	14	23	7	472
West North Central	115	2	2	2	121
South Atlantic	121	4	5	1	131
East South Central	100	2	5	1	108
West South Central	62	-	7	4	73
Mountain	18	2	6	1	27
Pacific	72	14	10	6	102
Total respondent foundries without furnace air pollution controls	1,052	18	73	29	1,172
New England	78	-	4	4	86
Middle Atlantic	207	-	11	3	221
East North Central	356	6	23	7	392
West North Central	103	1	2	2	108
South Atlantic	110	2	5	1	118
East South Central	88	1	5	1	95
West South Central	59	-	7	4	70
Mountain	15	1	6	1	23
Pacific	36	7	10	6	59
Total respondent foundries with furnace air pollution controls	180	24	-	-	204
New England	9	-	-	-	9
Middle Atlantic	22	4	-	-	26
East North Central	72	8	-	-	80
West North Central	12	1	-	-	13
South Atlantic	11	2	-	-	13
East South Central	12	1	-	-	13
West South Central	3	-	-	-	3
Mountain	3	1	-	-	4
Pacific	36	7	-	-	43

Source: Based on a survey conducted on BDSA Form 807--Gray Iron Foundry--Air Pollution Control.

COLLECTION EFFICIENCY OF EMISSION CONTROL EQUIPMENT SYSTEMS

Foundry Application	Particle Size	Typical Inlet Loading Gr/SCF	Typical Outlet Loading Gr/SCF					
			Wet Cap	Wet Scrubber 6"-30"	Wet Scrubber 30"-70"	Low Efficiency Cyclone	Fabric Filter	Electrostatic Precipitator
Melting								
Gray Iron Cupola	Coarse to Fine	1/2-10	0.4	0.3	0.05	0.4	0.01	0.036
Electric Arc	Fine	1/2-2	X	0.2	0.02	X	0.01	X
Screens and Transfer Points	Medium	1/2-3	X	0.005-0.01	X	X	0.01	X
Dry Sand Reclaimer	Coarse to Fine	10-40	X	0.1	0.02-0.05	X	0.01	X
Sand Cooler	Medium	1-20	X	0.01-0.05	X	X	X	X
Abrasive Cleaning	Fine to Coarse	1/2-5	X	0.01-0.05	X	X	0.01	X
Grinding	Coarse to Medium	1/2-2	X	0.01	X	0.1	0.01	X
Shakeout	Fine to Medium	1/2-1	X	0.01	X	X	X	X

Note: Particle Size

Coarse +20 Microns
Medium 2-20 Microns
Fine -2 Microns

X = Not applicable or rarely used.

Underlined outlet loading is lowest for that application.

Sources: Foundry Air Pollution Control Manual, American Foundrymen's Society;
Air Pollution Engineering Manual, U.S. Department of Health, Education and Welfare, #999-AP-40.

EXHIBIT IV-19

SAMPLING AND ANALYTICAL TECHNIQUES

INTRODUCTION

Sampling and analytical techniques for the determination of emission rates from industrial processes have been standardized for many specific particulate and gaseous materials. The techniques described in the following paragraphs are those most widely used in the testing of iron foundry emissions testing. The format and wording for most procedures correspond to the source indicated for each procedure.

SAMPLING TECHNIQUE

Scope

The primary objective of stack testing is to determine the nature and/or quantity of emissions being released into the atmosphere. Sampling procedures that follow are applicable to the cleaned gas side of the control unit.

Apparatus

The accuracy of emission testing results is dependent upon qualified personnel conducting the test and the use of the proper apparatus for the material to be collected. Figure 1 illustrates information on sampling locations and apparatus most commonly involved in stack testing.

Sampling Principles

The location and number of sampling points are based on size and shape of the duct, uniformity of gas flow in the duct,

availability of an adequate sampling port, and the space required to set up the equipment. Unfortunately, ideal conditions are seldom found in field testing and agreement on these factors must be reached before conducting the test.

To insure constancy of test conditions and results, complete information must be developed as to continuous or cyclic operation; nature, weight and composition of materials; gas volume and fluctuations; pressure; temperature and humidity; presence of other devices such as afterburners; and related conditions affecting the operation and equipment. These factors will regulate the time, number and duration of test runs.

Stack Gas Velocity

To determine particulate concentration in an exhaust stack, isokinetic source sampling must be used. This is the condition that exists when the velocity in the nozzle of the sampling tube is exactly the same as that in the stack. Isokinetic sampling is not mandatory when only gaseous substances are to be assayed.

In isokinetic sampling, the traverse area of the duct must be divided into equal areas and a pitot traverse taken. The use of the S-type pitot is recommended where particulates are involved to avoid any possibility of partial plugging and faulty readings. The velocity at each point must be calculated, and the volume of flow required to maintain that

velocity in the sampling tip should volume fluctuate. Provisions must be made so that the volume can be recalculated immediately each time the pressure changes at the meter. However, when sampling is downstream from a gas cleaner, the volume is controlled by the system's fan and remains relatively constant and this procedure may not be necessary.

Detailed procedures on conducting velocity measurements are given in Bulletin WP-50 of the Western Precipitation Company, ASME Performance Test Code 27-1957 and the Industrial Ventilation Manual of the American Conference of Governmental Industrial Hygienists.

Concurrent with conducting the pitot traverse, it is essential to determine the temperature of the stack gas. The measuring device will be dependent on the temperatures involved.

Sample Probe

In assembling the sampling probe, teflon tape should always be used instead of pipe dope to prevent adherences of particulates. Long radius bends should be used instead of elbows to facilitate cleaning. The probe should be just long enough for the task at hand. The rest of the train should be assembled and tested for leaks.

Temperature and Humidity

If the gas sampled is hot and humid, condensation may occur in the probe or in the filter holder. The probe or filter holder must be heated to stop condensation from occurring

because the water formed will trap water on the walls of the apparatus and will interfere with the filtration of particulates. Temperature control baths may be required for gas absorbers. In some cases the probe can be provided with a water cooling jacket.

Condensation

A condenser in the sampling train is required if the gas is humid. This serves two purposes. First, it removes excess water which may condense and damage the gas meter. Second, and of vital importance, a condenser gives assurance that the gas passing through the train is saturated at an identifiable point. This provides the basis for exact calculations of the volume of dried gas metered and conversion to standard conditions.

Collection Devices

The characteristics of the material in the stack will determine the collection method required. Dry filter mediums, of a variety of types, are most commonly used for particulate matter. Although in some cases the wet impingement method followed by a thimble is used. Gases are collected in absorbers with a proper absorbing solution. Grab sample units are available for spot sampling.

Flow Meters

If a dry gas meter is used, it must be calibrated before each use. If an orifice meter, or flow-type meter, is used

it must also be calibrated each time, and it must have enough sensitivity so that readings can be obtained to less than one percent. Finally, if volume is obtained by multiplying an instantaneous reading by the time of the operation, fluctuations must be kept to one percent.

Vacuum Source

A vacuum source is required to draw the sample from the stack through the sampling train. A variety of pumps or ejectors are available for this purpose. Their capacity must be sufficient to draw the gas through the sample train at the required volume. The range is from one liter to several cubic feet per minute.

Sampling time will be dependent upon the factor of obtaining a representative sample of the operation. It may vary from several long continuous integrated samples of 30 to 60 minutes or a number of short samples of 5-10 minutes.

ANALYTICAL PROCEDURES

Introduction

Analytical procedures for a number of materials are given in the sections that follow. All calculations must be according to standard procedures and the standard conditions of temperature at 70 degrees Fahrenheit and an atmospheric pressure of 29.92 inches of mercury.

Particulate Matter

(a) Scope

The definition of particulate matter accepted by the dust collection industry is given in the ASME Performance Test Codes 21-1941 and 27-1957. In essence, this defines particulate matter as all filterable solids present at standard temperature in an effluent gas stream.

(b) Auxiliary Apparatus

- Filter Media -	Efficiency of collection must be at least 99% for all particulates encountered and must be resistant to both heat and moisture.
- Balance -	Macro analytical balance or equivalent.
- Drying Oven -	Suitable for drying filters for about 5 hours at 105° C.
- Desiccation -	To retain dried filters before weighing.

(c) Sampling Procedure

The first step in sampling is to prepare the filtering medium. An identification number should be provided for each filter and recorded on a separate data sheet. Prior to weighing, the filter should be dried for about 5 hours at about 105° C and then weighed immediately. This weight should be recorded on the data sheets and not on the filter. In order to keep weighing errors at a minimum, careful handling of the filters is required.

Preferably the pitot traverse, temperature and humidity readings should be taken not more than one-half hour before sampling is begun. Assemble the sampling train as shown in Figure 1 and proceed with the sampling by inserting the probe into the test stack. Continual observation of the sampling train during the entire sampling period is required to record any changes in pressure, temperature and airflow. This information, along with barometric pressure, sampling time and rate, is recorded on the sampling data sheet. Complete information on the process should also be noted on the sampling data sheet.

Length of the sampling time, at any specific point in the stack, will be contingent upon changes, if any, in the process or fluctuations of air volume. The sampling time should at least cover a complete cycle and will vary from 30-60 minutes. If airflow is not uniform in the stack, 5- to 10- minute samples at each of the traverse points should be obtained. Samples taken during start-up and burn-down periods should, as a rule, be considered separately from those taken during the production cycle of the cupola.

After a run is completed the probe must be cleaned of retained particulate matter. An acceptable procedure is to brush with a long flexible brush while the sample train is pulling in clean air. For other contaminants, follow procedures, if any, indicated for the specific material.

(d) Sample Preparation

Collected samples should be dried and placed in a desiccator to reach equilibrium before weighing. The difference between the original weight and final weight is the total amount of particulate matter collected.

(e) Calculations

The total particulate matter collected is expressed in grams. From this value, calculations can be made to express the findings in grains/SCF, pounds/hour, or pounds/1,000 pounds of gas, using the following constants:

One (1) gram = 15.43 grains
One (1) pound = 7,000 grains
One (1) gram = 0.002205 pounds
One (1) standard cubic foot of air = 0.075 pounds

1. Grains/SCF

$$\text{Grains/SCF} = \frac{(\text{Grams})\ (15.43)}{\text{Total SCF sampled}}$$

2. Pounds/Hour

$$\text{Pounds/hour} = \frac{60\ (\text{grains/SCF})\ (\text{total gas volume to atmosphere - SCFM})}{7{,}000}$$

3. Pounds/1,000 Pounds Gas

$$\text{Pounds/1,000 Pounds gas} = \frac{(\text{grams})\ (2.205)}{(0.075)\ (\text{total SCF sampled})}$$

Arsenic

Source: American Conference of Governmental Industrial Hygienists.

(a) Scope

Stack sampling for arsenic is based on the reaction of arsine with silver diethyldithiocarbamate. The amount of arsenic, in the air sample, is read directly from the calibration curve.

(b) Auxiliary Apparatus

- Greenberg-Smith Impinger.
- Beckman DU Spectrophotometer with photomultiplier or equivalent
- Arsine Generator (See Figure 2)

(c) Reagents

Silver Diethyldithiocarbamate - a cooled solution of silver nitrate (1.7 g in 100 ml distilled water) is added to a cooled solution of sodium diethyldithiocarbamate (2.25 g in 100 ml distilled water). The lemon yellow precipitate is filtered off, washed thoroughly with distilled water and dried in a vacuum desiccator below 20° C.

Pyridine - Mallinckrodt reagent grade pyridine is passed through an alumina column 1 inch in diameter and 6 inches in depth, at the rate of approximately 150 ml per hour. This process may remove a considerable quantity of colored material.

Arsine Absorbing Solution - Dissolve 1 g of silver diethyldithiocarbamate in 200 ml of chromatographed pyridine and filter the solution.

Hydrochloric acid - Baker's analyzed, specific gravity 1.19.

Potassium Iodide Solution - Dissolve 15 g reagent grade potassium iodide in 100 ml distilled water.

Stannous Chloride Solution - Dissolve 40 g stannous chloride dihydrate in 100 ml hydrochloric acid.

Zinc - Baker's analyzed; granular 20 mesh.

Lead Acetate - Dissolve 10 g reagent grade lead acetate in 100 ml distilled water.

Arsenic Standard Stock Solution - Dissolve 1.320 g arsenic trioxide in 10 ml of 40% sodium hydroxide and diluted to 1 liter with distilled water. (Various strengths of standard solutions are prepared by further diluting this stock solution with suitable volumes of water, triple distilled in glass.)

Nonag - Stopcock grease, Fischer Scientific Co.

(d) Sampling Procedure

Assemble sampling train of probe, impinger with 100 ml of distilled water, flow meter and vacuum pump. Sampling rate is at 1 CFM for a period long enough to provide a minimum of 30 cubic feet at standard conditions.

(e) Analytical Procedure

Calibration curve - known microgram amounts of arsenic (1-15 micrograms) in the form of standard arsenic solution are pipetted into 125 ml Erlenmeyer flasks. Distilled water is added to make the total volume 35 ml. To the flasks are added 5 ml hydrochloric acid, 2 ml 15% potassium iodide solution, and 8 drops of stannous chloride solution. The flasks are swirled and allowed to stand for 15 minutes.

Three ml of the pyridine solution of silver diethyldithiocarbamate are placed in the absorbing tube, which is attached to the scrubber containing glass wool impregnated with lead acetate. (See Figure 2.)

The ground joints are lubricated with "Nonag" stopcock grease, 3 g of granulated zinc are added to the solution in the flask, and the receiving tube is inserted immediately. Arsine evolution is completed in about 30 minutes.

At the end of this time, the absorbing solution is transferred to a 1 cm square cell and the absorbance measured at 560 millimicrons in the Beckman spectrophotometer. Plotting measured absorbances against micrograms of arsenic taken produces the standard curve.

Air samples, after the previously described preparation treatment, are treated in the same manner as the standards.

(f) Calculations

Arsenic, in the form of arsine, displaces an equivalent amount of silver from silver diethyldithiocarbamate.

$$\text{mg As/M}^3 = \frac{V \cdot Y}{1{,}000 \cdot v \cdot Va}$$

Where v = aliquot (ml)
V = total sample (ml)
Y = micrograms in v
Va = gas sample volume, in cubic meters, at standard conditions

Beryllium

Source: Michigan Department of Public Health.

(a) Scope

This method describes a procedure for determining beryllium in stack gases.

(b) Auxiliary Apparatus

- Millipore filters and holder.
- Bausch & Lomb Large Littrow Emission Spectrograph or equivalent.

(c) Reagents

Platinum Internal Stock Solution - Purchase directly from Jarrell-Ash Company a 10% platinic chloride solution. This calculates out to be 57.88 mg platinum in 1 ml solution.

Platinum Internal Standard Working Solution - Pipette 1 ml of platinum stock solution containing 57.88 mg Pt per ml into a

25 ml volumetric flask, take to volume with water giving a solution containing 116 micrograms platinum/.05 ml.

Standard Beryllium Solutions:

1. Beryllium stock solution. Dissolve .0982 g of $BeSO_4 \cdot 4H_2O$ in 10 ml of redistilled 1:1 hydrochloric acid and dilute to 100 ml with distilled water. Solution contains 5.0 mg beryllium per 100 ml or 2.5 micrograms Be/.05 ml.

2. Working beryllium standard solutions. These should be prepared from the stock solution just before use. Suggested concentrations are from .003 to .5 microgram Be/.05 ml.

Nitric Acid - To clean all laboratory glassware.

(d) Sampling Procedure

Assemble sampling train of probe, millipore filter and holder, flow meter and vacuum pump. Sampling rate at 1 CFM for a period long enough to provide a minimum of 10 CF at standard conditions.

(e) Analytical Procedure

The millipore filter containing the sample is transferred to a chemically clean 125 ml beaker. The filter and sample are wet ashed with nitric acid. The residue is then dissolved in 3 ml of concentrated nitric acid and 1-2 ml of distilled water. Transfer to a graduated centrifuge tube, rinse the beaker with water and add the rinsing to the sample solution. Evaporate to

a volume of 0.2 ml and if an appreciable amount of salt is present, a volume of more than 0.2 ml may be required.

The standard curve is plotted on log-log paper and micrograms Be per .05 ml is plotted versus the intensity ratio of Be 2348.6 line over Pt 2357.1 line. The standard curve is usually set up in the range of .003 microgram Be/.05 ml to .5 microgram Be/.05 ml. Six beryllium concentrations used to establish the working curve are prepared as follows:

For the first 3 concentrations, the stock solution containing 50 micrograms Be/ml is diluted 1 ml to 100 in distilled water giving a working solution of .5 microgram Be/ml.

1. .003 microgram Be/.05 ml. Pipette 1.2 ml of working standard beryllium solution (.5 microgram Be/ml) into a 10 ml volumetric flask and take to volume with water.

2. .005 microgram Be/.05 ml. Pipette 2 ml of working standard beryllium solution (.5 microgram Be/ml) into a 10 ml volumetric flask and take to volume with water.

3. .01 microgram Be/.05 ml. Pipette 4 ml of working standard beryllium solution (.5 microgram Be/ml) into a 10 ml volumetric flask and take to volume with water.

4. .05 microgram Be/.05 ml. Pipette .2 ml of stock beryllium solution (50 micrograms Be/ml) into a 10 ml volumetric flask and take to volume with water.

5. .1 microgram Be/.05 ml. Pipette .4 ml of stock beryllium solution (50 micrograms Be/ml) into a 10 ml volumetric flask and take to volume with water.

6. .5 microgram Be/.05 ml. Pipette 2 ml of stock beryllium solution (50 micrograms Be/ml) into a 10 ml volumetric flask and take to volume with water.

Spectrographic apparatus, materials and exposure conditions are as follows:

1. Optical conditions - 10 micron slit is used in the spectrograph.

2. Densitometer - Non-recording National Spectrograph Spec Reader.

3. Electrodes - Upper Electrode (cathode) United Carbon Products Company, 3/16" diameter, sharpened to a point in a regular de-leaded pencil sharpener. Lower Electrode (anode). United Carbon Products Electrode, catalog No. 100-L, 1/4" diameter, crater is 3/16" diameter and 5/32" deep.

4. Exposure conditions - 220 volts DC arc, operating at 7.5 amperes with a constant gap of 5 mm maintained between the anode and cathode, exposure time is until burn-out of lithium chloride buffer.

5. Photographic - Eastman Kodak Spectrum Analysis No. 1 Plate, developed 3.5 minutes in Eastman D-19 Developer at 68° F and fixed for 8 minutes in Eastman Koda Fixer (National Spectrographic Developing machine). Emulsion is calibrated by use of the two-step filter in front of the slit. The density of

the filter section is given by Bausch and Lomb Company, makers of the filter.

6. Nitrogen - AirCo dry nitrogen, flow rate regulated by F. W. Dwyer Manufacturing Company flow meter, maximum flow rate 6 liters per minute, regulator 3,000 pounds. The nitrogen flow around the electrode is between 3-4 liters per minute.

Preparation of the electrodes for both standard curve and sample analysis is as follows: A 1/4" diameter electrode is waterproofed by immersion in Dow Corning silicone solution (2% in acetone), and air dried for at least 30 minutes. A 10 mg charge of lithium chloride-graphite buffer is placed in the electrode and packed by tapping gently on the table top.

Into the electrodes prepared as described above is pipetted .05 ml of the platinum internal standard working solution (116 micrograms/.05 ml). The electrodes are placed in a 60° C oven and allowed to dry. Upon removal from the oven, .05 ml of the standard beryllium solution is pipetted into the appropriate electrodes. From the centrifuge tubes, where the samples have been evaporated down, is pipetted .05 ml into the appropriate electrodes. The electrodes are then returned to the 60° C oven and maintained at that temperature until dry. The temperature is then brought up to 105° C and maintained at that temperature for 1 hour. The electrodes are now removed from the oven and are ready for analysis. After the spectrograph and power

supply have been set as previously described, the electrodes are placed in the respective electrode holders. The nitrogen flow is turned on and set at a rate of between 3-4 liters per minute around the lower electrode. With the shutter open during the entire exposure the arc is lit and allowed to run until burn-out of the lithium chloride buffer which is indicated by a vanishing of the red lithium color.

After the plate has been developed and dried as described previously, it is placed on the densitometer and the percent transmission set to 100 on a clear portion of the plate. The percent transmittance value of Be 2348.6 and the background adjacent to this line is read. The percent transmittance value of Pt 2357.1 line is also read. Through the use of the gamma curve the percent transmission values of the bismuth line and the background adjacent to it and the Pt line are transformed to I values and a ratio taken of I value Be 2348.6 over I value Pt 2357.1 made. Each one of the varying concentrations of beryllium standard curve and of the sample is run in triplicate and an average of these taken for the final calculation. The amount of beryllium per .05 ml sample is read from the standard curve.

(f) Calculation

$$\text{micrograms Be/M}^3 = \frac{V \cdot Y}{v \cdot Va}$$

where v = aliquot (ml)
V = total sample (ml)
Y = micrograms in v
Va = gas sample volume, in cubic meters, at standard conditions

Cadmium

Source: Michigan Department of Public Health.

(a) Scope

Stack testing for cadmium can be accomplished by the polarograph method using a dropping-mercury electrode with the sample as the electrolyte.

(b) Auxiliary Apparatus

Sargent Polarograph - Model XX1, recording type or equivalent.

(c) Reagents

Standard Lead Solution - Dissolve approximately 25 grams of C.P. $Pb(NO_3)_2$ in minimum of hot water and cool with stirring. Filter with suction on small Buchner funnel. Repeat recrystallization. Dry crystals at 100°-110° C to constant weight, cool in desiccator and store in tightly stoppered pyrex bottle. The product has no water of crystallization and is not appreciably hygroscopic. Weigh exactly 0.1599 grams of recrystallized C.P. $Pb(NO_3)_2$, put into 500-ml volumetric flask, and take to volume with 0.1 N HCl. This gives a standard lead solution containing 200 micrograms Pb/ml with 0.1 N HCl as the electrolyte. The 0.1 N HCl should be prepared from constant boiling hydrochloric acid.

Standard Cadmium Solution - Weigh exactly 0.2744 grams of $Cd(NO_3)_2 \cdot 4H_2O$ into a 500-ml volumetric flask and take to volume with 0.1 N HCl. This gives a standard cadmium solution containing 200 micrograms cadmium per ml with 0.1 NHCl as the electrolyte. As in the lead solution the 0.1 N HCl should be prepared from constant boiling hydrochloric acid.

Oxygen Absorbent for Purification of Nitrogen - Pass nitrogen through a first scrubbing flask (a midget impinger) containing concentrated NH_4OH and copper turnings. Caution: Make certain hole in impinger is not plugged before turning nitrogen under pressure on. Then pass nitrogen through a second scrubbing flask containing concentrated sulfuric acid, again making certain this is not plugged before applying pressure.

0.2 N hydrochloric acid - Prepare this from constant boiling hydrochloric acid according to outline in Lange's Handbook.

Clean, Dry Mercury - Purchase from Eberback & Son

(d) Sampling Procedure

Assemble sampling train of probe, impinger with 100 ml of 5% nitric acrid, flow meter and vacuum pump. Sample at rate of 1 CFM for a period long enough to provide a minimum of 30 cubic feet at standard conditions.

(e) Analytical Procedure

Sample Preparation - Transfer the collecting solution from the impinger into a 250 ml beaker, wash out impinger with hot 5% nitric acid and all taken down to dryness on a hot plate. Cool and add 25 ml of 0.2 N HCl. Heat just to boiling and transfer to a 50 ml volumetric flask. Dilute to volume with distilled water which will dilute the 0.2 N HCl to 0.1 N HCl which is the electrolyte.

Transfer a 10-ml aliquot from the 50-ml volumetric flask into the polarographic cell, add 1 ml of 200 micrograms Pb per ml solution, and remove oxygen from the cell by bubbling nitrogen, which is being purified as described under reagents, through for three to five minutes. The initial voltmeter is set at .3 volts, the span voltmeter is set at .6 volts, thereby giving a range from -.3 volts to -.9 volts. This is sufficient as lead "comes off" at approximately -.44 volts and cadmium at approximately -.66 volts. The sensitivity setting might have to be found by trial and error; 0.020 suffices for most samples although if the cadmium is low the sensitivity will have to be increased (decreasing the number of microamperes/mm.).

If there is a possibility that Pb is present in the sample an aliquot of the sample should be run in the polarographic cell first, without any internal standard added. If there is Pb present in the sample, this must be taken into account when Pb, the internal standard, is added.

Standard Curve - Into the polarographic cell is introduced 1 ml of 200 micrograms Pb per ml solution, 1 ml of 200 micrograms Cd per ml solution and 9 ml of 0.1 N HCl. This gives a total amount of solution in the cell of 11 ml, thereby enabling a later removal of 10 ml of the sample and 1 ml of 200 micrograms Pb per ml internal standard solution. Also, there is an electrolyte in the cell of 0.1 N HCl. Both the volume of liquid in the cell and the electrolyte for standard curve and sample are critical for a proper analysis.

On the standard curve the heights of the Pb and Cd curves are measured in mm. The Cd to Pb ratio is found, which is divided by the number of micrograms of Cd used giving a factor for 1 microgram Cd versus 200 micrograms Pb. It is suggested that 200 micrograms Pb be used as an internal standard in each sample for Cd thereby simplifying the calculations. The factor for 1 microgram Cd versus 200 microgram Pb, found at the beginning of the series of samples being analyzed, will be used for the calculations throughout this series.

(e) Calculations

For the sample "polarogram" the heights of the Pb and Cd curves are measured in mm. and the Cd to Pb ratio found in the same manner as the standard curve. The ratio found here is divided by the factor found in the standard curve for 1 microgram Cd versus 200 micrograms Pb giving the number of micrograms of Cd in the aliquot put into the polarographic cell.

$$\text{mg Cd/M}^3 = \frac{V \cdot Y}{1{,}000 \cdot v \cdot Va}$$

Where v = aliquot (ml)
V = total sample (ml)
Y = micrograms in v
Va = gas sample volume, in cubic meters, at standard conditions

Fluoride

Source: Talvitie method modified by Michigan Department of Public Health.

(a) Scope

This method describes a procedure for determining fluoride in stack gases.

(b) Auxiliary Apparatus

- Standard impinger with fritted glass bubbler.
- 250 ml Claissen flasks.
- 100 ml Nessler Tubes.

(c) Reagents

Standard Sodium Fluoride - Make a solution containing 1 mg of fluoride per ml (2.21 g of sodium fluoride to 1 liter). Take 10 mls of this solution and dilute to 1 liter; 1 ml of this dilution contains .01 mg fluoride.

Color Forming Reagent - Dissolve 36.99 g of sodium sulfate in about 500 ml of hot distilled water and 17.7 g of sodium formate in about 200 ml of hot distilled water. Mix together and when cooled, add 0.1436 g thorium nitrate tetrahydrate and 11 ml of 90% formic acid.

Alizarin monosodium sulfonate indicator 128.25 mg dissolved in 1 liter of distilled water.

Nitric Acid - About 5 ml concentrated acid, diluted to a liter with distilled water.

Sodium Hydroxide - .5 N. (20 g dissolved in 1 liter of water).

Silver Sulfate.

Concentrated Sulfuric Acid.

(e) Sampling Procedure

Assemble sampling train of probe, impinger with fritted glass bubbler containing 100 ml of a 2% sodium hydroxide solution, flow meter and vacuum pump. Sample at a rate of 1 CFM for a period long enough to provide a minimum of 15 cubic feet at standard conditions.

(f) Analytical Procedure

Sample Preparation - Transfer the collecting solution from the impinger into a Claissen flask. Slowly add 35 ml of concentrated sulfuric acid (using small long stem funnel) to content, submerging and swirling flask in cool-cold water while adding the acid--this offsets the loss of HF. Add boiling chips and silver sulfate (to cover the end of a spatula). Close the flask with a two-hole rubber stopper, through which passes a thermometer and a 6 mm O.D. glass tube drawn to

capillary size and extends down into the solution. Connect tube to a separatory funnel containing water. This is to slowly add water to both cool the flask and to replenish the water boiled off due to distillation in the Claissen flask.

The distillation flask should be placed on a pad of transite or asbestos, or on a plate of aluminum with a hole about 2 inches in diameter made to fit the flask perfectly.

Regulate the heat under the steam distillation flask so that the distillate being collected remains cool. Adjust the application of heat to the still so that a temperature of 165° C is maintained. Collect the distillate in a 250-ml volumetric flask or in a 250-ml beaker, and then make up to exactly 250 ml in a volumetric flask. Stopper the flask and mix. Pipette 25 ml into a 100-ml-long form Nessler tube. Add 5.0 ml of alizarin indicator. Titrate carefully with a .5 N sodium hydroxide until the solution changes from yellow to a decided pink. Back titrate with the dilute nitric acid until the solution changes to a pure yellow. Dilute to about 90 ml, add 3 ml of thorium reagent, make up to exactly 100 ml and mix well. After 30 minutes, compare with the standards. If the same is beyond the range of the standards, use a smaller aliquot. If it is too close to the standard containing no fluorine, double or treble the aliquot.

A blank must be carried through all the steps of the procedure, using the same amounts of reagents as are used in the

samples. An aliquot of 75 ml is usually necessary to determine the amount of fluorine present in the blank.

(f) Calculations

Calculate the total amount of fluorine present in the blank and subtract this from the total fluorine found in each sample.

$$\text{mg } F/M^3 = \frac{V \cdot Y}{1{,}000 \cdot v \cdot Va}$$

where v = aliquot (ml)
V = total sample (ml)
Y = micrograms in v
Va = gas sample volume, in cubic meters, at standard conditions

Lead

Source: Michigan Department of Public Health.

(a) Scope

Stack testing for cadmium can be accomplished by the polarograph method using a dropping-mercury electrode with the sample as the electrolyte.

(b) Auxiliary Apparatus

Sargent Polarograph - Model XX1, recording type, or equivalent.

(c) Reagents

Standard Lead Solution - Dissolve approximately 25 grams of C.P. $Pb(NO_3)_2$ in minimum of hot water and cool with stirring. Filter with suction on small Buchner funnel. Repeat

recrystallization. Dry crystals at 100°-110° C to constant weight, cool in desiccator and store in tightly stoppered pyrex bottle. The product has no water of crystallization and is not appreciably hygroscopic. Weight exactly 0.1599 grams of recrystallized C.P. $Pb(NO_3)_2$, put into 500-ml volumetric flask, and take to volume with 0.1 N HCl. This gives a standard lead solution containing 200 micrograms Pb/ml with 0.1 N HCl as the electrolyte. The 0.1 N HCl should be prepared from constant boiling hydrochloric acid.

Standard Cadmium Solution - Weight exactly 0.2744 grams of $Cd(NO_3)_2 \cdot 4H_2O$ into a 500-ml volumetric flask and take to volume with 0.1 N HCl. This gives a standard cadmium solution containing 200 micrograms cadmium per ml with 0.1 N HCl as the electrolyte. As in the lead solution, the 0.1 N HCl should be prepared from constant boiling hydrochloric acid.

Oxygen Absorbent for Purification of Nitrogen - Pass nitrogen through a first scrubbing flask (a midget impinger) containing concentrated NH_4OH and copper turnings. Caution: Make certain hole in impinger is not plugged before turning nitrogen under pressure on. Then pass nitrogen through a second scrubbing flask containing concentrated sulfuric acid, again making certain this is not plugged before applying pressure.

0.2 N. Hydrochloric Acid - Prepare this from constant boiling hydrochloric acid according to outline in Lange's Handbook.

Clean, Dry Mercury - Purchase from Eberbach and Son.

(d) Sampling Procedure

Assemble sampling train of probe, impinger with 100 ml 5% nitric acid solution, flow meter and vacuum pump. Sample at rate of 1 CFM for a period long enough to provide a minimum of 30 cubic feet at standard conditions.

(e) Analytical Procedure

Sample Preparation - Transfer the collecting solution to a 250-ml beaker, wash out impinger with 5% hot nitric acid and all taken down to dryness on a hot plate. Cool and add 25 ml of 0.2 N HCl. Heat just to boiling and transfer to a 50-ml volumetric flask. Dilute to volume with distilled water which will dilute the 0.2 N HCl to 0.1 N HCl which is the electrolyte.

Transfer a 10-ml aliquot from the 50-ml volumetric flask into the polarographic cell, add 1 ml of 200 micrograms Cd per ml solution, and remove oxygen from the cell by bubbling nitrogen which is being purified as described under reagents, through for three to five minutes. The instrument used is a Sargent Polarograph - Model XXI and the settings are as follows: A.C. switch down (on), D.M.E. - up (negative), Damping - down (off), Initial E.M.F. - up (additive), D.C. E.M.F. - down (1.5 V span), Chart drive - up (on), Operation - up (E.M.F. increasing). The initial voltmeter is set at .3 volts, the span voltmeter is set at .6 volts, thereby giving a range from -.3 volts to -.9

volts. This is sufficient as lead "comes off" at approximately -.44 volts and cadmium at approximately -.66 volts. The sensitivity setting might have to be found by trial and error, 0.020 suffices for most samples although if the lead is low the sensitivity will have to be increased (decreasing the number of microamperes/mm).

If there is a possibility that Cd is present in the sample, an aliquot of the sample should be run in the polarographic cell first, without any internal standard added. If there is CD present in the sample this must be taken into account when Cd, the internal standard, is added.

Standard Curve - Into the polarographic cell is introduced 1 ml of 200 micrograms Pb per ml solution, 1 ml of 200 micrograms Cd per ml solution and 9 ml of 0.1 N HCl. This gives a total amount of solution in the cell of 11 ml thereby enabling a later removal of 10 ml of the sample and 1 ml of 200 micrograms Cd per ml internal standard solution. Also, there is an electrolyte in the cell of 0.1 N HCl. Both the volume of liquid in the cell and the electrolyte for standard curve and sample are critical for a proper analysis.

On the standard curve the heights of the Pb and Cd curves are measured in mm. The Pb to Cd ratio is found, which is divided by the number of micrograms of Pb used giving a factor for 1 microgram Pb versus 200 micrograms Cd. It is suggested that 200 micrograms Cd be used as an internal standard in each sample for Pb thereby simplifying the calculations. The factor

for 1 microgram Pb versus 200 micrograms Cd, found at the beginning of the series of samples being analyzed, will be used for the calculations through this series.

(f) Calculations

For the sample "polarogram" the heights of the Pb and Cd curves are measured in mm and the Pb to Cd ratio found in the same manner as the standard curve. The ratio found here is divided by the factor found in the standard curve for 1 microgram Pb versus 200 micrograms Cd giving the number of micrograms of Pb in the aliquot put into the polarographic cell.

$$\text{mg Pb/M}^3 = \frac{V \cdot Y}{1{,}000 \cdot v \cdot Va}$$

where v = aliquot (ml)
V = total sample (ml)
Y = micrograms in v
Va = gas sample volume, in cubic meters, at standard conditions.

Mercury

Source: American Conference of Governmental Industrial Hygienists.

(a) Scope

Divalent mercury forms an orange-yellow complex with dithizone in dilute acid solution which can be extracted by chloroform. An additional extraction in the presence of chloride and bromide ions eliminates the interference of other metals.

(b) Auxiliary Apparatus

- Beckman DU Spectrophotometer or equivalent.
- Squibb separator funnels.
- Cuvettes.

(c) Reagents

HCl-0.1 N.

Meta Cresol Purple Indicator - Dissolve 0.05 g of the power in 6 ml of 0.05 N NaOH; then dilute to 100 ml with distilled water.

Buffer Solution - Dissolve 300 g anhydrous Na_2HPO_4 and 75 g K_2CO_3 in distilled water to make 2 liters of solution (MacIlvaine's Buffer Solutions).

Treated Chloroform - Chloroform treated with hydroxylamine hydrochloride as per the method of Hubbard, Industrial Engineering Chemistry, Anal. Ed., 9, 493 (1937).

Dithizone Solutions - Make up a stock solution containing 0.5 mg dithizone per ml of chloroform. Other strength dithizone solutions can be made up as needed. It is advisable to allow the dithizone solutions to stabilize overnight before use.

Potassium Bromide Solution - 40% KBr in distilled water.

Ammonium Citrate - 40%. Mix 40 g citric acid, monohydrate, with about 20 ml distilled water. Add sufficient ammonium hydroxide slowly with constant stirring to make solution

alkaline to phenol red and make to volume with water. Purify by shaking with dithizone in chloroform and clear with pure chloroform.

Mercury Standard Solutions - Dissolve 0.1354 g mercuric chloride, C.P., special reagent grade in 1 N HCl and make up to 100 ml with the acid. This solution contains 1 mg Hg per ml and is quite stable. If any cloud or sediment develops, it should be discarded. Other strength solutions can be made by dilution with distilled water as the need arises.

Hydroxylamine Hydrochloride - 20% solution in distilled water.

(d) Sampling Procedure

Assemble sampling train of probe, impinger with 100 ml of 0.25% iodine in a 3% aqueous solution of potassium iodide. Sampling rate of 1 CFM for a period long enought to provide a minimum of 30 cubic feet at standard conditions.

(e) Analytical Procedure

Sample Preparation - The contents of the impinger flask and washings are made up to a known volume with distilled water. A proper aliquot is taken to place the mercury concentration within range of the method. Add 5 ml of ammonium citrate, 1 ml hydroxylamine hydrochloride and shake. Add 2 drops of phenol red indicator. (Always add the hydroxylamine hydrochloride before the phenol red.) Titrate with ammonium

hydroxide to the full color end point pH of 8.5. Extract with 5 ml portions of 20 mg/liter dithizone solution, withdrawing the chloroform layers into another 250 ml Squibb separatory funnel, into which has been placed 50 ml of 0.1 N HCl. Continue to extract with and withdraw 5-ml portions until the dithizone in the chloroform layer does not change color.

Shake the above dithizone extract with 50 ml 0.1 N HCl for 2 minutes. Draw off the chloroform into a clean separatory funnel. Wash the aqueous phase with two, 3-5 ml portions of treated chloroform and add to the extracts. Discard the aqueous phase. To the chloroform extracts, add 50 ml of 0.1 N HCl and 10 ml of the 40% KBr reagent. Shake for 2 minutes. The Hg goes into the aqueous phase as H_2HgBr_4 while the Cu and Bi remains in the dithizone which is discarded. Wash the aqueous phase with a few ml of treated chloroform. Let the phases separate well and discard completely all chloroform droplets. An aliquot of the stripping solution may be taken if necessary so that the amount of Hg will fall on the standard curve. If an aliquot is taken, make up to 50 ml volume with 0.1 N HCl.

Add 10 ml buffer solution to bring the pH to 6, and 10 ml of 10 mg/liter dithizone solution. Shake well for 2 minutes. Avoid any exposure to direct sunlight or exceedingly bright artificial light.

NOTE: If the separatory funnel was not washed thoroughly with distilled water, the dithizone may be oxidized.

By means of a cotton swab on an applicator stick, remove any traces of moisture from the stem of the funnel after the stopcock has been opened for a second to allow the chloroform to fill the bore. Loosely insert a small cotton plug in the stem of the funnel. Rinse a cuvette twice with 1-2 ml portions of the chloroform layer and draw off the remaining dithizone into the cuvette. Place in the spectrophotometer and read at point of maximum light absorption (485 millimicron) against distilled chloroform. A blank on reagents should be carried through the entire procedure and this blank subtracted from the final result.

Standard curve - Suitable concentrations of mercury to give coverage over the entire range are used to establish a particular curve. Three or four points are sufficient.

Place 5 ml of the 40% KBr reagent, 10 ml of the buffer solution and the proper amount of standard mercury solution in a 125 ml Squibb separatory funnel. Add enought 0.1 N HCl to make the final volume 65 ml. Then add 10 ml of 10 mg/liter dithizone solution and shake for 2 minutes. Flush the stem of the separatory funnel and remove moisture by means of a cotton swab, withdraw the chloroform layer and read in the spectrophotometer as described above.

The 10 mg/liter dithizone solution is of sufficient strength to cover the range from 0 to 15 micrograms of mercury. By using 20 ml instead of the standard 10 ml of this reagent,

the concentration range covered can be doubled. It is not recommended to add more than 20 ml of 10 mg/liter dithizone to any sample.

For only an occasional mercury analysis, it is better to bracket the sample with standard amounts rather than prepare an entire curve.

(f) Calculation

$$\text{mg Hg/M}^3 = \frac{V \cdot Y}{1{,}000 \cdot v \cdot Va}$$

where v = aliquot (ml)
V = total sample (ml)
Y = micrograms in v
Va = gas sample volume, in cubic meters, at standard conditions

Zinc

Source: Michigan Department of Public Health.

(a) Scope

Stack testing for zinc can be accomplished by the polarograph method using a dropping-mercury electrode with the sample as the electrolyte.

(b) Auxiliary Apparatus

Sargent Polarograph - Model XXl, recording type, or equivalent.

(c) Reagents

Stock Zinc Solution - Weigh exactly 5.0 grams of dry reagent zinc (30 mesh or finer) into a 500-ml volumetric flask and add a minimum amount of constant boiling hydrochloric acid to get the zinc in solution. Boil until solution is complete and make up to volume with distilled water. The solution contains 10.0 mg zinc per ml.

Working Standard Zinc Solution - Pipette 5.0 ml of stock zinc solution (10.0 mg zinc per ml) into 500-ml volumetric flask and take to volume with 0.2 M KCl. The solution contains 100 micrograms zinc per ml with 0.2 M KCl as the electrolyte.

0.2 M KCl Solution - Weigh 14.9 grams reagent grade KCl into 1 liter volumetric flask and take to volume with distilled water.

Standard Cadmium Solution - Weigh exactly 0.2744 grams of $Cd(NO_3)_2 \cdot 4H_2O$ into a 500-ml volumetric flask and take to volume with 0.2 M KCl. The solution contains 200 micrograms Cd per ml with 0.2 M KCl as electrolyte.

Oxygen Absorbent for Purification of Nitrogen - Pass nitrogen through a first scrubbing flask (midget impinger) containing concentrated NH_4OH and copper turnings. Caution: Make certain hole in impinger is not plugged before turning nitrogen on under pressure. Then pass nitrogen through a

second scrubbing flask containing concentrated sulfuric acid, again making certain this is not plugged before applying pressure.

Clean, Dry Mercury - Purchase from Eberbach & Son.

(d) Sampling Procedure

Assemble sampling train of probe, impinger with 100 ml 5% nitric acid solution, flow meter and vacuum pump. Sample at rate of 1 CFM for a period long enough to provide a minimum of 30 cubic feet at standard conditions.

(e) Analytical Procedure

Sample Preparation - Transfer the collecting solution from the impinger into a 250 ml beaker, wash out impinger with 5% hot nitric acid and all taken down to dryness on a hot plate. Add 2 ml concentrated nitric acid, wetting the sample thoroughly. Add 6 drops perchloric acid and swirl to mix. Evaporate to dryness on a hot plate at 350°-400° C. Repeat the acid treatment to obtain complete digestion. Cool and add 10 ml of 0.2 M potassium chloride solution. Loosen the solids with a rubber policeman, rinse policeman and beaker walls with 3-5 ml of 0.2 M potassium chloride solution. Cover with a watch glass and boil 2-3 minutes. Filter the solution into a 50-ml volumetric flask washing the filter with 0.2 M KCl. Dilute to volume with 0.2 M KCl giving the sample in 50 ml with 0.2 M KCl as the electrolyte.

Transfer 10 ml aliquot into polarographic cell, add 1 ml of 200 micrograms Cd per ml solution, and remove oxygen from cell by bubbling nitrogen through for three to five minutes. The initial voltmeter is set at .4 volts, the span voltmeter is set at 1 volt, thereby giving a range from -.4 volts to -1.4 volts. This is sufficient as cadmium "comes off" at approximately -.66 volts and zinc at approximately -1.05 volts. The sensitivity setting will vary depending on the amount of zinc present. The setting used for the standard curve is 0.02 microamperes/mm.

If there is a possibility that Cd is present in the sample an aliquot of the sample should be run in the polarographic cell first, without any internal standard added. If there is Cd present in the sample this must be taken into account when CD, the internal standard, is added.

Standard curve - Into the polarographic cell is introduced 1 ml of 100 micrograms Zn per ml solution, 1 ml of 200 micrograms Cd per ml solution, and 9 ml of 0.2 M KCl solution. This gives a total amount of solution in the cell of 11 ml thereby enabling a later removal of 10 ml of the sample and 1 ml of 200 micrograms Cd per ml internal standard solution. Also, there is an electrolyte in the cell of 0.2 M KCl. Both the volume of liquid in the cell and the electrolyte for standard curve and sample are critical for a proper analysis.

On the standard curve the heights of the Zn and Cd curves are measured in mm. The Zn to Cd ratio is found which is divided by the number of micrograms of Zn used giving a factor for 1 microgram Zn versus 200 micrograms Cd. It is suggested that 200 micrograms Cd be used as an internal standard in each sample for Zn thereby simplifying the calculations. The factor for 1 microgram Zn versus 200 micrograms Cd, found at the beginning of the series of samples being analyzed, will be used for the calculations through this series.

(f) Calculations

For the sample "polarogram" the heights of the Zn and Cd curves are measured in mm and the Zn to Cd ratio found in the same manner as the standard curve. The ratio found here is divided by the factor found in the standard curve for 1 microgram Zn versus 200 micrograms Cd giving the number of micrograms of Zn in the aliquot put into the polarographic cell.

$$\text{mg Zn/M}^3 = \frac{V \cdot Y}{1{,}000 \cdot v \cdot Va}$$

where v = aliquot (ml)
V = total sample (ml)
Y = micrograms in v
Va = gas sample volume, in cubic meters, at standard conditions

Nitrogen Oxides, Phenoldisulfonic Acid Method

Source: Public Health Service.

(a) Scope

When sulfur dioxide, ammonia, iron or other compounds that interfere with the hydrogen peroxide method are present in the gas to be sampled and/or the concentration of the nitrogen oxides is below about 100 ppm, this method is used. Accuracy below 5 ppm is questionable. This test is unsuitable for atmospheric sampling.

(b) Apparatus

- Sampling Probe - Stainless steel (type 304 or 316) or glass tubing of suitable size (1/4-inch-OD, 6-foot-long stainless steel tubing has been used).

- Collection Flask - A 2-liter round-bottom flask with an outer 24/40 joint for integrated samples or a 250-ml MSA sampling tube for grab samples.

- Orifice Assembly - The size of the glass capillary tubing depends on the desired sampling period (flow rates of about 1 liter per minute have been used). Use of this orifice is not mandatory.

- Adapter with Stopcock - Adapter for connecting collection flask to sampling "T".

- Three-way Stopcock.

- Manometer - A 36-inch Hg manometer or accurate vacuum gage.

- Spectrophotometer - Beckman Model "B" or equivalent.

(c) Reagents

Thirty Percent Hydrogen Peroxide - (reagent grade).

Three Percent Hydrogen Peroxide - Dilute 30% H_2O_2 with water at 1:10 ratio. Prepare fresh daily.

Concentrated Sulfuric Acid.

0.1 N (approximate) Sulfuric Acid - Dilute 2.8 ml concentrated H_2SO_4 to 1 liter with water.

Absorbing Solution - Add 12 drops 3% H_2O_2 to each 100 ml 0.1 N H_2SO_4. Make enough for required number of tests.

1 N (approximate) Sodium Hydroximde - Dissolve 40 gm NaOH pellets in water and dilute to 1 liter.

Concentrated Ammonium Hydroxide.

Fuming Sulfuric Acid - 15 to 18 weight percent free sulfuric anhydride (oleum).

Phenol (reagent grade).

Phenoldisulfonic Acid Solution - Dissolve 25 grams of pure white phenol in 150 ml concentrated H_2SO_4 on a steam bath. Cool and add 75 ml fuming sulfuric acid. Heat to 100° C for 2

hours. Store in a dark stoppered bottle. This solution should be colorless if prepared with quality reagents.

Potassium Nitrate (reagent grade).

Standard Potassium Nitrate Solution - Solution A: Dissolve 0.5495 gram KNO_3 and dilute to 1 liter in a volumetric flask. Solution B: Dilute 100 ml of Solution A to 1 liter. One ml of Solution A contains the equivalent of 0.250 mg NO_2 and of Solution B, 0.0250 mg NO_2.

(d) Sampling Procedure

Integrated Grab Sample - Add 25 ml freshly prepared absorbing solution into the flask. Record the exact volume of absorbing solution used.

Set up the apparatus as shown in Figure 3, attach the selected orifice. Purge the probe and orifice assembly with the gas to be tested before sampling begins by applying suction to it. Evacuate the system to the vapor pressure of the solution: this pressure is reached when the solution begins to boil. Record the pressure in the flask and the ambient temperature. Open the valve to the sampling probe to collect the sample. Constant flow will be maintained until the pressure reaches 0.53 of the atmospheric pressure. Stop before this point is reached. During sampling, check the rate of fall of the mercury in one leg of the manometer in case clogging, especially of the orifice, occurs. At the end of the sampling period, record the pressure, temperature, and barometric pressure.

An extended period of sampling can be obtained by following this procedure. Open the valve only a few seconds at regular intervals. For example: Open the valve for 10 seconds and close it for 50 seconds; repeat every 60 seconds.

Grab Sample - Set up the apparatus as shown in Figure 4 for high concentrations (200-3000 ppm) or the apparatus as shown in Figure 4 for low concentrations (0-200 ppm) but delete the orifice assembly. The same procedure is followed as in the integrated method except that the valve is opened at the source for about 10 seconds and no orifice is used.

Calibration curves are made to cover different ranges of concentrations. Using a microburette for the first two lower ranges and a 50-ml burette for the next two higher ranges, transfer the following into separate 150-ml beakers (or 200-ml casseroles).

1. 0-100 ppm: 0.0 (blank), 2.0, 4.0, 6.0., 8.0, 10.0, 12.0, 16.0, 20.0 ml of KNO_3 Solution B.

2. 50-500 ppm: 0.0 (blank), 1.0, 1.5, 2.0, 3.0, 4.0, 6.0, 8.0, 10.0 ml of KNO_3 Solution A.

3. 500-1500 ppm: 0.0 (blank), 5.0, 10.0, 15.0, 20.0, 25.0, 30.0 ml of KNO_3 Solution A.

4. 1500-3000 ppm: 0.0 (blank), 15.0, 30.0, 35.0, 40.0, 45.0., 50.0, 55.0, 60.0 ml KNO_3 Solution A.

Add 25.0 ml absorbing solution to each beaker. Follow as directed in the Analytical Procedure section starting with the addition of 1 N NaOH.

After the yellow color has developed, make dilutions for the following ranges: 50 to 500 ppm (1:10); 500 to 1,400 ppm (1:20); and 1,500 to 3,000 ppm (1:50). Read the absorbance of each solution at 420 millimicron.

Plot concentrations against absorbance on rectangular graph paper. A new calibration curve should be made with each new batch of phenoldisulfonic acid solution or every few weeks.

(e) Analytical Procedure

Shake the flask for 15 minutes and allow to stand over night.

Transfer the contents of the collection flask to a beaker. Wash the flask three times with 15-ml portions of H_2O and add the washings to the solution in the beaker. For a blank add 25 ml absorbing solution and 45 ml H_2O to a beaker. Proceed as follows for the bank and samples.

Add 1 N NaOH to the beaker until the solution is just alkaline to litmus paper. Evaporate the solution to dryness on a water bath and allow to cool. Carefully add 2 ml phenoldisulfonic acid solution to the dried residue and triturate thoroughly with a glass rod, making sure that all the residue comes into contact with the solution. Add 1 ml H_2O and four drops concentrated H_2SO_4. Heat the solution on the water bath for 3 minutes, stirring occasionally.

Allow to cool and add 20 ml H_2O, mix well by stirring, and add 10 ml concentrated NH_4OH, dropwise, stirring constantly. Transfer the solution to a 50-ml volumetric flask, washing the beaker three times with 4- to 5-ml portions of H_2O. Dilute to mark with water and mix thoroughly. Transfer a portion of the solution to a dry, clean centrifuge tube and centrifuge, or filter a portion of the solution.

Read the absorbance of each sample at 420 millimicron. If the absorbance is higher than 0.6, make a suitable dilution of both the sample and blank and read the absorbance again.

(f) Calculations

$$\text{ppm } NO_2 = \frac{(5.24 \times 10^5)\ (C)}{V_s}$$

Where C = concentration of NO_2, mg (from calibration chart)

V_s= gas sample volume at 70° F and 29.92 in Hg, ml.

Sulfur Dioxide and Sulfur Trioxide,
Shell Development Company Method

Source: National Air Pollution Control Administration Publication 999-AP-13.

(a) Scope

This method describes a procedure for determining sulfur dioxide and sulfur trioxide in stack gases.

(b) Apparatus

- Sampling Probe	- Glass tubing (preferably borosilicate or quartz) of suitable size with a ball joint at one end and a removable filter at the other (a 1/2-inch-OD, 6-foot-long tube has been used.)
- Filter	- A filter is needed to remove particulate matter, which may contain metal sulfates and cause interference during analysis. Borosilicate glass wool, Kaolin wool, or silica wool are suitable filters for removing particulate matter.
- Adapter	- Six plug-type connecting tubes T 24/40, one with a 90° bend and a socket joint.
- Heating Tape	- An insulated heating tape with a powerstat to prevent condensation in exposed portion of probe and adapter. Alternative: glass wool or other suitable insulators.
- Dry Gas Meter	- A 0.1-cubic-foot-per-revolution dry gas meter equipped with a fitting for a thermometer and a manometer. Alternately, a calibrated tank or a rotameter calibrated at the operating pressure may be used.
- Vacuum pump.	
- Thermometers	- One 10°-50° C, ± 1° C; and one 0°-300° C ± 5° C are suitable.
- Manometer	- A 36-inch-Hg manometer
- Absorbers	- Two U-shaped ASTM D 1266 lamp sulfur absorbers with coarse-sintered plates.

- Filter Tube	-	One 40-mm-diameter Corning medium-sintered plate.
- Scrubber for Purifying Air	-	An ASTM D 1266 lamp sulfur absorber with coarse-sintered plate.
- Teflon Tubing	-	Teflon tubing, 1/4-inch ID, for connecting absorbers. Alternative: 8-mm pyrex tubing with butt-to-butt connections held together with Tygon.

(c) Reagents

Water - Distilled water that has been deionized.

Isopropanol, Anhydrous.

Eighty Percent Isopropyl Alcohl - Dilute isopropanol with water at a ratio of 4 to 1.

Thirty Percent Hydrogen Peroxide - (reagent grade).

Three Percent Hydrogen Peroxide - Dilute 30% hydrogen peroxide with water at a ratio of 10 to 1. Prepare fresh daily.

Barium Chloride - ($BaCl_2 \cdot 2H_2O$, reagent grade).

0.0100 N Alcoholic Barium Chloride - Dissolve 1.2216 grams $BaCl_2 \cdot 2H_2O$ in 200 ml of water and dilute to 1 liter with isopropanol. Standardize this solution with 0.01 N alcoholic sulfuric acid solution.

(As an alternate titrating solution to 0.01 N alcoholic barium chloride, in American Petroleum Institute Study Group uses 0.01 N alcoholic barium perchlorate because they believe that it gives a sharper end point during titration.)

Thorin Indicator - 1-(0-arsonophenylazo)-2 naphthol-3, 6-disulfonic acid, disodium salt.

0.2 Percent Thorin Indicator - Dissolve 0.2 gram thorin indicator in 100 ml water. Store in polyethylene bottle.

(d) Sampling Procedure

Set up the apparatus as shown in Figure 5. Place 30 ml of 80% isopropyl alcohol in the first absorber and 10 ml in the filter tube. The add 50 ml of 3% hydrogen peroxide to the second absorber. A light film of silicone grease on the upper parts of the joints may be used to prevent leakage. Wind the heating tape in a uniform single layer around the exposed portion of the probe and adapter and cover the heating tape with asbestos tape wound in the opposite direction. Place a thermometer between the heating tape and asbestos as near the adapter joint as possible. Connect the heating tape to a powerstat, switch on the current, and maintain the probe and adapter at a temperature at which no condensation will occur (about 250° C). Sample at 0.075 cubic foot per minute until 2 cubic feet or a suitable volume of gas has been sampled. Record the meter readings, temperatures and pressures at

10-minute intervals. Note the barometric pressure. Do not sample at a vacuum of more than 8 inches Hg.

Disconnect the asbestos tape, heating tape, probe, and adapter and allow them to cool. Connect the scrubber for purifying air to the inlet of the isopropyl alcohol absorber and add 50 ml of 3% hydrogen peroxide. Replace the water in the ice bath with tap water. Draw air through the system for 15 minutes to transfer residual sulfur dioxide to the hydrogen peroxide absorber. Disconnect the purifying air scrubber. (Although the use of air for removal of sulfur dioxide from isopropyl alcohol should not result in oxidation of sulfur dioxide to sulfur trioxide, the American Petroleum Institute Joint Study Group uses 99% nitrogen to preclude any possibility of oxidation.) Remove the filter and wash the probe and adapter with 80% isopropyl alcohol. Place the washings in the isopropyl alcohol absorber.

Disconnect the hydrogen peroxide absorber and transfer the contents and the water washings to a 250-ml volumetric flask. Dilute the water to the mark. Analyze for sulfur dioxide.

Stopper the isopropyl alcohol absorber and apply suction to the filter end. Remove the suction line and allow the partial vacuum in the absorber to draw the solution from the filter. Rinse the filter tube with 80% isopropyl alcohol before the suction is lost. Transfer the contents of the isopropyl

alcohol absorber and its washings to a 250-ml volumetric flask and dilute to the mark with 80% isopropyl alcohol. Analyze for sulfur trioxide.

(e) Analytical Procedure

Sulfur Trioxide - Pipette a suitable aliquot to a flask and dilute to 100 ml with 80% isopropyl alcohol. Add a few drops of thorin indicator (enough to give a yellow color). Titrate with 0.01 N $BaCl_2$ to the pink end point. Make a blank determination in parallel.

Sulfur Dioxide - Transfer a suitable aliquot to a flask and add 4 times this volume of isopropyl alcohol. Dilute to 100 ml with 80% isopropyl alcohol, add enough thorin indicator to give a yellow color, an titrate with standard 0.01 N $BaCl_2$ to the pink end point. Run a blank determination in parallel.

(f) Calculations

$$\text{ppm } SO_2 \text{ or } SO_3 \text{ by volume} = \frac{24(A-B)\ (N)\ (F)\ (T)}{(V_o)\ (P)}$$

Where A = 0.01N $BaCl_2$ used for titration of sample
B = ml 0.01N $BaCl_2$ used for titration of blank
N = exact normality of $BaCl_2$
F = dilution factor
T = average meter temperature, ^oR
V_o = observed volume of gas sample, cu ft
P = average absolute meter pressure, in. Hg

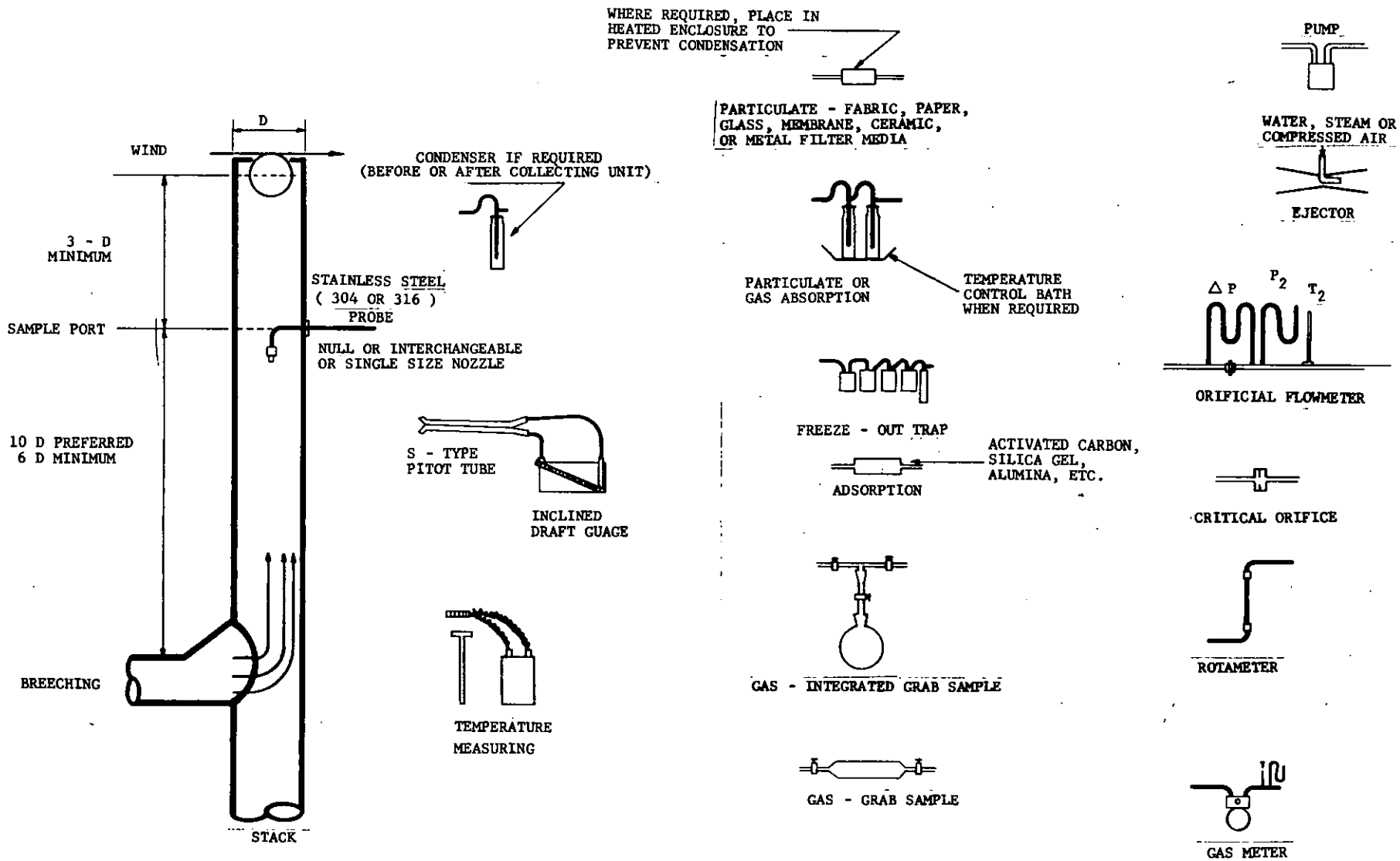

FIG. 1 SAMPLING LOCATION & TRAIN COMPONENTS

APPENDIX A
Figure 1

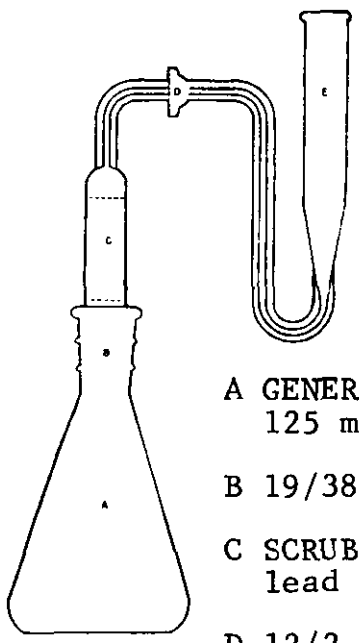

A GENERATOR
125 ml Erlenmeyer

B 19/38

C SCRUBBER
lead acetate on pyrex wool

D 12/2 ball joint

E ABSORBER
12 ml heavy wall
centrifuge tube

FIGURE 2

Arsine Generator

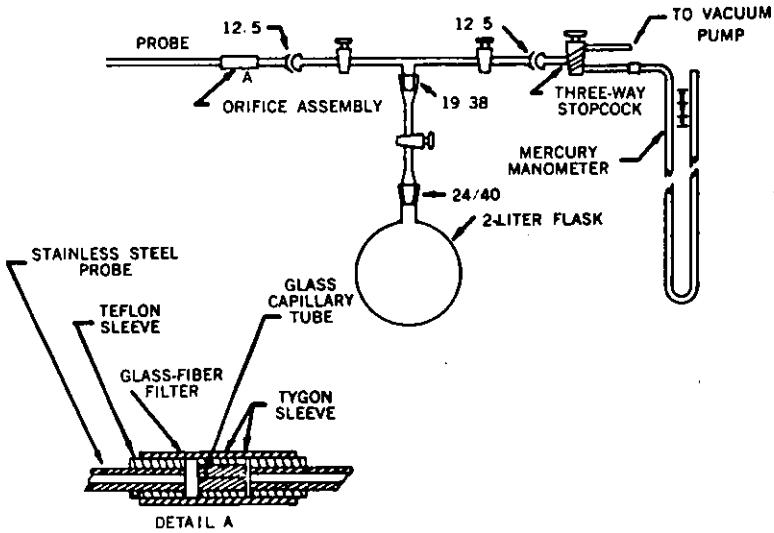

FIGURE 3

APPARATUS FOR INTEGRATED GRAB SAMPLES

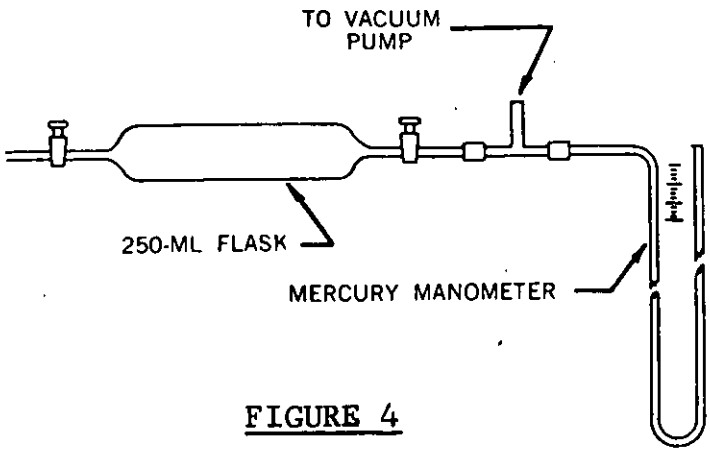

FIGURE 4

APPARATUS FOR GRAB SAMPLES

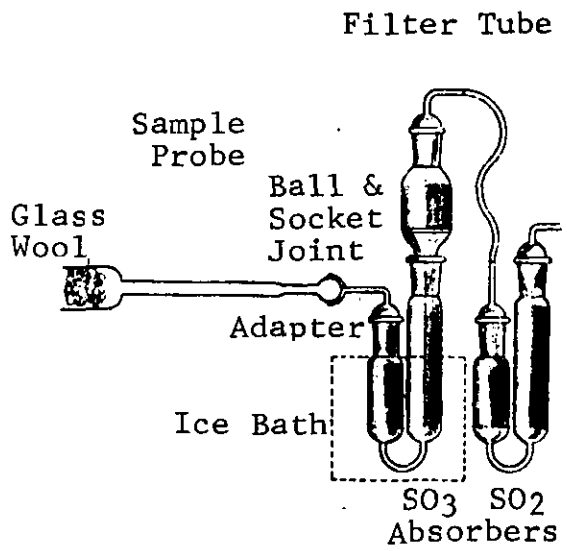

FIGURE 5

Sulfur dioxide - sulfur trioxide sampling train.

Budget Bureau No. 85-S69044
Approval expires: Sept. 30, 1970

Date:_____ Team:_____

SYSTEMS ANALYSIS OF EMISSIONS AND EMISSIONS CONTROL IN THE IRON FOUNDRY INDUSTRY

INTERVIEW GUIDE FOR IN-PLANT ENGINEERING SURVEY

BY

A. T. Kearney & Company, Inc.

For

NATIONAL AIR POLLUTION CONTROL ADMINISTRATION
Contract CPA 22-69-106

IDENTIFICATION

A. Name and location of company AFS Code_____

1. Name_____

2. Number and Street_____ 3. County_____

4. City_____ 5. State _____ 6. Zip Code _____

B. Location of foundry if different from above

1. Number and Street_____

2. City_____ 3. County_____

4. State_____ 5. Zip Code _____

C. Person to contact regarding this report

1. Name_____ 2. Area Code/ Phone _____

AFS Code_____ Zip Code _____

Section I - GENERAL INFORMATION

1. Type of Metal Cast

	Metal Cast	Percent Cast	Tons/Month Melt
1.___	Gray Iron		
2.___	Malleable Iron		
3.___	Ductile Iron		

2. Average number of production workers for 1968.

   ☐ 1. Under 10

   ☐ 2. 10-49

   ☐ 3. 50-249

   ☐ 4. Over 250

3. To what industry do you supply castings?

   ☐ 1. Automotive

   ☐ 2. Agricultural

   ☐ 3. Cast Iron Pipe

   ☐ 4. Industrial and Electrical Equipment

   ☐ 5. Valves and Fittings

   ☐ 6. Jobbing

4. Weight range of castings produced.

   ☐ 1. Under 10 lbs.

   ☐ 2. 10-49

   ☐ 3. 50-99

   ☐ 4. 100-500

   ☐ 5. Over 500 lbs.

5. What is the basic product cast. (i.e., Brake drum, pipe, machinery bases, railroad, etc.)_____

_____

6. CHARACTERISTICS OF FURNACE

FURNACE NUMBER	FURNACE TYPE	LINING OR COIL	USE	SIZE		MODEL	MELT RATE	UTILIZATION HR/DAY			BLAST			CHARGE DOOR		HEIGHT CHARGING DOOR SILL ABOVE FLOOR, FEET	PREHEAT CHARGE	FUEL INJECTION OR OXYGEN ENRICHMENT		AFTERBURNERS				POWER SUPPLY, KW.	CHARGING
	CODE 1 - CUPOLA 2 - CHANNEL IND. 3 - CORELESS IND 4 - DIRECT ARC 5 - INDIRECT ARC 6 - AIR FURNACE 7 - OTHER (SPECIFY)	1-ACID 2-BASIC 3-NEUTRAL 4-UNLINED 5-SIN OPEN CH. 6-SIN CLOSED CHANNEL 7-DOUBLE CHANNEL	CODE 1 - MELT 2 - HOLD 3 - DUPLEX	FURNACE LINED DIAMETER, INCHES	HOLDING CAPACITY, TONS	MANUFACTURER & MODEL NUMBER	AVERAGE DAILY MELT RATE TON/HR.	MELTING	POURING	OTHER	TYPE 1 - HOT 2 - WARM 3 - COLD	VOL. & PRESS VOLUME, SCFM AND PRESSURE, OZ. WATER	TEMP. DEGREES FAHRENHEIT	SIZE, SQ. FT.	1 - OPEN 2 - CLOSED *		1 - PREHEAT 2 - DRIED 3 - BOTH 4 - NONE	1 - NATURAL GAS 2 - OXYGEN 3 - OTHER (SPECIFY)	CFM-OXYGEN BTU/HR.-GAS	NUMBER	SIZE, BTU/HR.	LOCATION 1 - ABOVE DOOR 2 - BELOW DOOR	DISTANCE AFTER-BURNER TO GAS TAKE-OFF, INCHES		1 - TOP 2 - SIDE
1																									
2																									
3																									
4																									
5																									
6																									
7																									
8																									
9																									
10																									

NOTES:

* 1. IF CLOSED, DESCRIBE CONSTRUCTION, CONTROL STATION, FAIL SAFE FEATURES, ETC.

2. NOTE NATURE OF BLAST HEATING, E.G., RECUPERATIVE, EXT. FIRED, RECUP. & EXT. FIRED.

3. NOTE WHETHER LINE, MEDIUM OR HIGH FREQUENCY FOR CORELESS INDUCTION.

AFS Code _____

7. Characteristics of charge for each furnace

Charge	Furnace Number 1	2	3	4	5	6
a. Metallic (lbs, Total)						
1. Remelt						
2. Pig Iron						
3. Purchased Cast Iron						
4. Purchased Steel						
5. Briquettes						
6. Punchings and/or Turnings						
b. Fluxes (lbs. Total)						
1. Limestone						
2. Dolomite						
3. Soda Ash						
4. Fluorspar						
5. Other (specify)						
c. Carbo-coke(lbs.)						
d. Additives (lbs. Total)						
1.						
2.						
3.						
4.						
e. Metal to Coke Ratio						
f. Sulphur Content of Coke, %						
g. Desulphurizing Agents (lbs)						
1. Caustic Soda						
2. Soda Ash						
3. Other (specify)						
h. Quality of Scrap 1. Rusty 3. Oily 2. Dirty 4. Clean						
i. Charging Method (Bucket, etc.)						

AFS Code _____

8. How is the scrap prepared and treated? _____

_____

_____

9.

Stack Analysis	Furnace Number					
	1	2	3	4	5	6
% CO						
% CO_2						
% N_2						
Stack Gas Temp. @ Top of Burden, °F						

10. Alloy additions to the ladle

Operation	Type	Additions in lbs.	Ladle Size Tons
Nodularization			
Alloys	1.		
	2.		
	3.		
	4.		
Other	1.		
	2.		

11. Average length of time for "light-up" per day, min. _____

12. Method of light-up

- ☐ 1. Wood
- ☐ 2. Gas
- ☐ 3. Oil
- ☐ 4. Electric
- ☐ 5. Other (specify)

AFS Code _____

13. Have you in the last ten years replaced cupolas?

a. Type of furnace.

☐ 1. Electric Arc

☐ 2. Induction, Coreless

☐ 3. Induction, Channel

☐ 4. Other (specify)

b. When, 19____

c. Reason _____

_____

14. Pouring Smoke Control

a. Furnace Tapping

1. Ventilation

☐ 1. General

☐ 2. Local

2. Effectiveness

☐ 1. Excellent

☐ 2. Good

☐ 3. Fair

b. Mold Pouring

1. Ventilation

☐ 1. General

☐ 2. Local

2. Effectiveness

☐ 1. Excellent

☐ 2. Good

☐ 3. Fair

Section III - CONTROL SYSTEM

15. Identification of control system. Complete columns (b) through (g) for each control system.

Control Number (a)	Control System (b)			Furnace(s) Controlled (c)			Year Installed (d)	Gas Vol. cfm (e)	Gas Temp. °F (f)	Pressure Drop Inches Water (g)
1							19__			
2							19__			
3							19__			
4							19__			

(a) Control System Identification Number is for reference in succeeding items.

(b) Type of control system. Please use the following code:

System	Code
Fly ash and spark arrester	1
Afterburner	2
Wet Cap	3
Mechanical Collector	4
Wet Scrubber	5
Fabric Filter	6
Electrostatic Precipitator	7

Where a control system consists of several pieces of connected equipment such as an afterburner, mechanical collector, and electrostatic precipitator indicate the sequence by 2/4/7.

(c) Furnaces serviced by the control system. Use the furnace identification number from Item 6. Furnaces not listed here will be assumed to have no control system.

(d) Year the control system was installed

(e) Rated gas volume in std. dry cubic feet per minute at the exhauster inlet.

(f) Gas temperature at the exhauster inlet in degrees fahrenheit.

(g) Static pressure drop through the exhauster in inches of water.

AFS Code _____

16. Characteristics of the control systems. Complete the applicable items below:

	Control Systems			
	1	2	3	4
a. Height of exhaust stack above ground level (ft.)				
b. Combustion chamber size in Btu's/hour				
c. Water consumption in gallons/min.				
1. Dust collector				
2. Gas cooling				
3. Recirculated				
d. Noise control (✓)				
e. Heat exchanger. Type or make				
f. Type of filter media				
Media				
1. Natural fibre				
2. Synthetic fibre				
3. Glass fibre				
g. Air to cloth ratio				
h. Effluent and gas take-off				
Take-off				
1. Above charging door				
2. Below charging door				
3. Into side draft hood				
4. " full roof hood				
5. " canopy hood				
6. " snorkel				
7. Direct shell evaluation				
8. None				

AFS Code_____

17. Operation of control system

Report below for each control system.

	Control System 1	2	3	4
a. Particulate Concentration				
1. Inlet, gr/dry scf., lbs./1000 lbs. gas, lb./hr.				
2. Outlet, gr/dry scf., lbs./1000 lbs. gas, lb./hr.				
b. Catch, lb. Dust/Ton Melt				
c. Collection Efficiency, %				
d. Melt rate at which measurements were made, Ton/hr.				
e. Particle Proportion, %				
Distribution				
1. Less than 2 microns				
2. " " 5 microns				
3. " " 10 microns				
4. " " 20 microns				
5. " " 50 microns				
6. " " 100 microns				
7. " " 200 microns				
8. " " 500 microns				
9. " " 1000 microns				
f. Gas Analysis, %				
1. CO_2				
2. CO				
3. O_2				
4. N_2				
5. H_2				
6. SO_2				
7. H_2O				
g. Catch Proportion, %				
1. Less than 2 microns				
2. " " 5 microns				
3. " " 10 microns				
4. " " 20 microns				
5. " " 50 microns				
6. " " 100 microns				
7. " " 200 microns				
8. " " 500 microns				
9. " " 1000 microns				
h. Chemical Composition of Catch, %				
1.				
2.				
3.				
4.				
5.				
6.				
7.				
i. Combustible Analysis				
1.				
2.				
3.				

AFS Code_____

18. Controlled non-melting operations

Foundry Operation (a)	Control System (b)	Control Equipment				
		Type (c)	Year Installed (d)	Rated Size (cfm) (e)	Collection (#/week) (f)	Collection Efficiency(%) (g)
			19____			
			19____			
			19____			
			19____			
			19____			
			19____			

From the following list indicate in column (a) above, the code number of each of the operations in which your foundry employs air pollution control equipment.

Operation	Code
Metal pouring and mold cooling	1
Coremaking operations	2
Sand drying and sand reclamation	3
Sand conditioning	4
Sand handling	5
Mold and casting shakeout and conveying	6
Abrasive cleaning	7
Tumbling operations	8
Grinding operations	9
Annealing and heat treating furnaces	10
Pattern shop sawdust and chip systems	11
Casting surface coating	12
Welding	13

In column (c) above indicate the code number for the type of control equipment.

Control Equipment	Code
Afterburner	1
Mechanical collector	2
Wet scrubber	3
Fabric filter	4

AFS Code _____

19. For the operations listed below provide the following: Capacities, number of units, and equipment types.

Operation	Number of Units	Capacity	Equipment Type and Size
a. Molding			
Automatic Molding Lines			
Molding Machines			
Sand Slingers			
Other (specify)			
b. Sand Conditioning Systems			
c. Core Room			
Batch Ovens			
Tower Ovens			
Horizontal Oven			
Core Blowers			
Molding Machine			
Core Sand Plant			
Other (specify)			
d. Shakeouts			
Mechanical			
Manual			
e. Cleaning Rooms			
Shot Blast Machines			
Tumbling Barrels			
Grinders			
Other (specify)			
f. Heat Treatment			
Oil Fired Ovens			
Gas Fired Ovens			
Oil Quench			
g. Paint Booths			

Section IV - COSTS OF POLLUTION CONTROL

20. Investment costs. Report on lines 1 - 5, the designated costs associated with each of the control systems.

Investment Cost Categories	Control Systems on Furnaces				All Other Control Systems
	1 (a)	2 (b)	3 (c)	4 (d)	(e)
1. Basic Equipment					
2. Auxiliary Equipment					
3. Engineering					
4. Installation					
5. Total					

Described below are examples of the items to be included in each type of investment cost. The column headed "All Other Control Systems" should include investment cost totals for all non-melting control systems as reported in item 18.

1. Basic equipment. Include taxes and shipping charges with F.O.B. price on the "flange to flange" costs of basic equipment. If you manufactured the basic control equipment, estimate the cost of fabrication.

2. Auxiliary equipment. Include the following items essential to the successful operation of a control system but not generally manufactured by gas cleaning equipment suppliers:

   a. Air movement equipment
      (1) Fans and blowers
      (2) Electrical; motors, starters, wire conduit, switches, etc.
      (3) Hoods, duct works, gaskets, dampers, etc.

   b. Liquid movement equipment
      (1) Pumps
      (2) Electrical; motors, starters, wire conduit switches, etc.
      (3) Piping and valves
      (4) Settling tanks

   c. Storage and disposal equipment
      (1) Dust storage hoppers
      (2) Sludge pits
      (3) Draglines, trackway, roadway, etc.

d. Support construction
   (1) Structural steel work
   (2) Cement foundation, piers, etc.
   (3) Insulation (therman)
   (4) Vibration and/or anti wear materials
   (5) Protective cover

e. Instrumentation: measurement and/or control of:
   (1) Air and/or liquid flow
   (2) Temperature and/or pressure
   (3) Operation and capacity
   (4) Power
   (5) Opacity of flue gas (smoke meters, etc.)

3. Engineering. Allocate the cost of research and engineering expenditures required for the selection of the specific control system, including such items as: material specifications, gas stream measurements, pilot operations, etc.

4. Installation. Include the following items when applicable:

   Labor to install
   Cleaning the site
   Yard and underground
   Building modification
   Design contingency
   Inspection
   Field contingency
   Overtime
   Existing facilities protection
   Supervision and engineering
   Field Office charges
   System start-up
   Profit reduction attributable to plant shutdown for installation

AFS Code_____

21. Annual costs.
Report in lines 1 - 6 the designated annual costs associated with each of the control systems.

Annual Cost Categories	Control Systems on Furnaces 1 (a)	2 (b)	3 (c)	4 (d)	All Other Control Systems (e)
1. Operating					
2. Maintenance					
3. Depreciation					
4. Overhead					
5. Process and equipment changes					
6. Total					

Described below are examples of the items to be included in each type of annual cost. The column headed "All Other Control Systems" should include annual cost totals for all non-melting control systems in item 18.

Annual Cost Categories

1. Operating costs
   a. Utilities needed to operate such as electricity, water, and gas
   b. Waste disposal operations
   c. Materials consumed in operating the system

2. Maintenance costs include labor and materials for:
   a. Replacement of parts and equipment
   b. Supervision and engineering
   c. Repairs
   d. Lubrication
   e. Surface protection (cleaning and painting)

3. Depreciation is the straight line allocation of total investment costs over the accounting life of the equipment

4. Other overhead for the control system includes:
   a. The cost of capital at 7% of the total investment cost
   b. Property taxes
   c. Insurance
   d. Miscellaneous

AFS Code_____

5. Process and equipment changes: include here changes in melting processes, melting equipment and furnace charge which were made when pollution control equipment was installed.

22. List and evaluate any benefits from controlling your air pollution such as reduced plant maintenance, reduced roof maintenance, increased property value, by-product recovery, reduced insurance premiums and fewer complaints by employees and neighbors, and/or problems incurred due to the control equipment such as design problems, start-up problems, and production delays.

23. Remarks.

(Coke Analysis)

REFERENCES

SECTION II

1. Foundry Magazine, "Foundry Census," July, 1970, pp. 94-95.

2. U.S. Dept. of Commerce, "Iron and Steel Foundries and Steel Ingot Producers, Summary for 1968," July, 1970.

3. Foundry Magazine, "Inventory of Foundry Equipment," 1968, 1960, 1954, 1957.

SECTION III

1. U.S. Department of Commerce News, Business and Defense Services Administration, BD 69-14, March 13, 1969.

2. The Cupola and Its Operation published by the American Foundrymen's Society, 3rd edition, 1965.

3. Metals Handbook: Volume 5 Forging and Casting, published by the American Society for Metals, 8th edition, 1970.

4. Principles of Metal Casting, R. Heine, McGraw-Hill Book Co., 1955, pp. 550-553.

SECTION IV

1. The Cupola and Its Operation, American Foundrymen's Society, Des Plaines, Illinois, 3rd edition, 1965

2. Kupolofenentstaubung, G. Engels and E. Weber, Giesserieverlag G.m.b.H., Dusseldorf, translated by P. S. Cowen, Gray and Ductile Iron Founders' Society, Cleveland, Ohio.

3. "Reader's Comment. Letter from Institut fur Giessereitechnik," Dusseldorf, Germany, Foundry, December, 1969, p. 48.

4. Conference on Foundry Ventilation and Dust Control, Harrogate, England, 1965. British Cast Iron Research Association, Alvechurch, Birmingham.

5. Dust Collectors, American Foundrymen's Society, 1967.

6. Control of Emissions from Metal Melting Operations, American Foundrymen's Society, no date.

7. Cupola Dust Collection, W. Witheridge, The Foundry, March, 1950, p. 88.

8. Foundry Air Pollution Control Manual, American Foundrymen's Society, 1967.

9. Private communication.

10. Air Pollution Engineering Manual, U.S. Department of Health, Education and Welfare, Public Health Service, Publication No. 999-AP-40, 1967.

SECTION V

1. "Recommended Practice for Testing Particulate Emissions from Iron Foundry Cupolas," edited by a joint committee of American Foundrymen's Society and The Gray & Ductile Iron Founder's Society, Inc.