12.10 Gray Iron Foundries

12.10.1 General

Iron foundries produce high-strength castings used in industrial machinery and heavy transportation equipment manufacturing. Castings include crusher jaws, railroad car wheels, and automotive and truck assemblies.

Iron foundries cast 3 major types of iron: gray iron, ductile iron, and malleable iron. Cast iron is an iron-carbon-silicon alloy, containing from 2 to 4 percent carbon and 0.25 to 3.00 percent silicon, along with varying percentages of manganese, sulfur, and phosphorus. Alloying elements such as nickel, chromium, molybdenum, copper, vanadium, and titanium are sometimes added. Table 12.10-1 lists different chemical compositions of irons produced.

Mechanical properties of iron castings are determined by the type, amount, and distribution of various carbon formations. In addition, the casting design, chemical composition, type of melting scrap, melting process, rate of cooling of the casting, and heat treatment determine the final properties of iron castings. Demand for iron casting in 1989 was estimated at 9540 million megagrams (10,520 million tons), while domestic production during the same period was 7041 million megagrams (7761 million tons). The difference is a result of imports. Half of the total iron casting were used by the automotive and truck manufacturing companies, while half the total ductile iron castings were pressure pipe and fittings.

Table 12.10-1. CHEMICAL COMPOSITION OF FERROUS CASTINGS BY PERCENTAGES

Element	Gray Iron	Malleable Iron (As White Iron)	Ductile Iron	Steel
Carbon	2.0 - 4.0	1.8 - 3.6	3.0 - 4.0	<2.0[a]
Silicon	1.0 - 3.0	0.5 - 1.9	1.4 - 2.0	0.2 - 0.8
Manganese	0.40 - 1.0	0.25 - 0.80	0.5 - 0.8	0.5 - 1.0
Sulfur	0.05 - 0.25	0.06 - 0.20	<0.12	<0.06
Phosphorus	0.05 - 1.0	0.06 - 0.18	<0.15	<0.05

[a] Steels are classified by carbon content: low carbon is less than 0.20 percent; medium carbon is 0.20-0.5 percent; and high carbon is greater than 0.50 percent.

12.10.2 Process Description[1-5,39]

The major production operations in iron foundries are raw material handling and preparation, metal melting, mold and core production, and casting and finishing.

12.10.2.1 Raw Material Handling And Preparation -

Handling operations include the conveying of all raw materials for furnace charging, including metallics, fluxes and fuels. Metallic raw materials are pig iron, iron and steel scrap, foundry returns, and metal turnings. Fluxes include carbonates (limestone, dolomite), fluoride (fluorospar), and

carbide compounds (calcium carbide). Fuels include coal, oil, natural gas, and coke. Coal, oil, and natural gas are used to fire reverberatory furnaces. Coke, a derivative of coal, is used for electrodes required for heat production in electric arc furnaces.

As shown in Figure 12.10-1, the raw materials, metallics, and fluxes are added to the melting furnaces directly. For electric induction furnaces, however, the scrap metal added to the furnace charge must first be pretreated to remove grease and oil. Scrap metals may be degreased with solvents, by centrifugation, or by preheating to combust the organics.

12.10.2.2 Metal Melting -

The furnace charge includes metallics, fluxes, and fuels. Composition of the charge depends upon specific metal characteristics required. The basic melting process operations are furnace operations, including charging, melting, and backcharging; refining, during which the chemical composition is adjusted to meet product specifications; and slag removal and molding the molten metal.

12.10.2.2.1 Furnace Operations -

The 3 most common furnaces used in the iron foundry industry are cupolas, electric arc, and electric induction furnaces. The cupola is the major type of furnace used in the iron foundry industry. It is typically a cylindrical steel shell with a refractory-lined or water-cooled inner wall. The cupola is the only furnace type that uses coke as a fuel. Iron is melted by the burning coke and flows down the cupola. As the melt proceeds, new charges are added at the top. The flux combines with nonmetallic impurities in the iron to form slag, which can be removed. Both the molten iron and the slag are removed at the bottom of the cupola.

Electric arc furnaces (EAFs) are large, welded steel cylindrical vessels equipped with a removable roof through which 3 retractable carbon electrodes are inserted. The electrodes are lowered through the roof of the furnace and are energized by 3-phase alternating current, creating arcs that melt the metallic charge with their heat. Electric arc furnace capacities range from 5 to 345 megagrams (6 to 380 tons). Additional heat is produced by the resistance of the metal between the arc paths. Once the melting cycle is complete, the carbon electrodes are raised and the roof is removed. The vessel can then be tilted to pour the molten iron.

Electric induction furnaces are cylindrical or cup-shaped refractory-lined vessels that are surrounded by electrical coils. When these coils are energized with high frequency alternating current, they produce a fluctuating electromagnetic field which heats the metal charge. The induction furnace is simply a melting furnace to which high-grade scrap is added to make the desired product. Induction furnaces are kept closed except when charging, skimming and tapping. The molten metal is tapped by tilting and pouring through a hole in the side of the vessels.

12.10.2.2.2 Refining -

Refining is the process in which magnesium and other elements are added to molten iron to produce ductile iron. Ductile iron is formed as a steel matrix containing spheroidal particles (or nodules) of graphite. Ordinary cast iron contains flakes of graphite. Each flake acts as a crack, which makes cast iron brittle. Ductile irons have high tensile strength and are silvery in appearance.

Two widely used refining processes are the plunge method and the pour-over method. In plunging, magnesium or a magnesium alloy is loaded into a graphite "bell" which is plunged into a

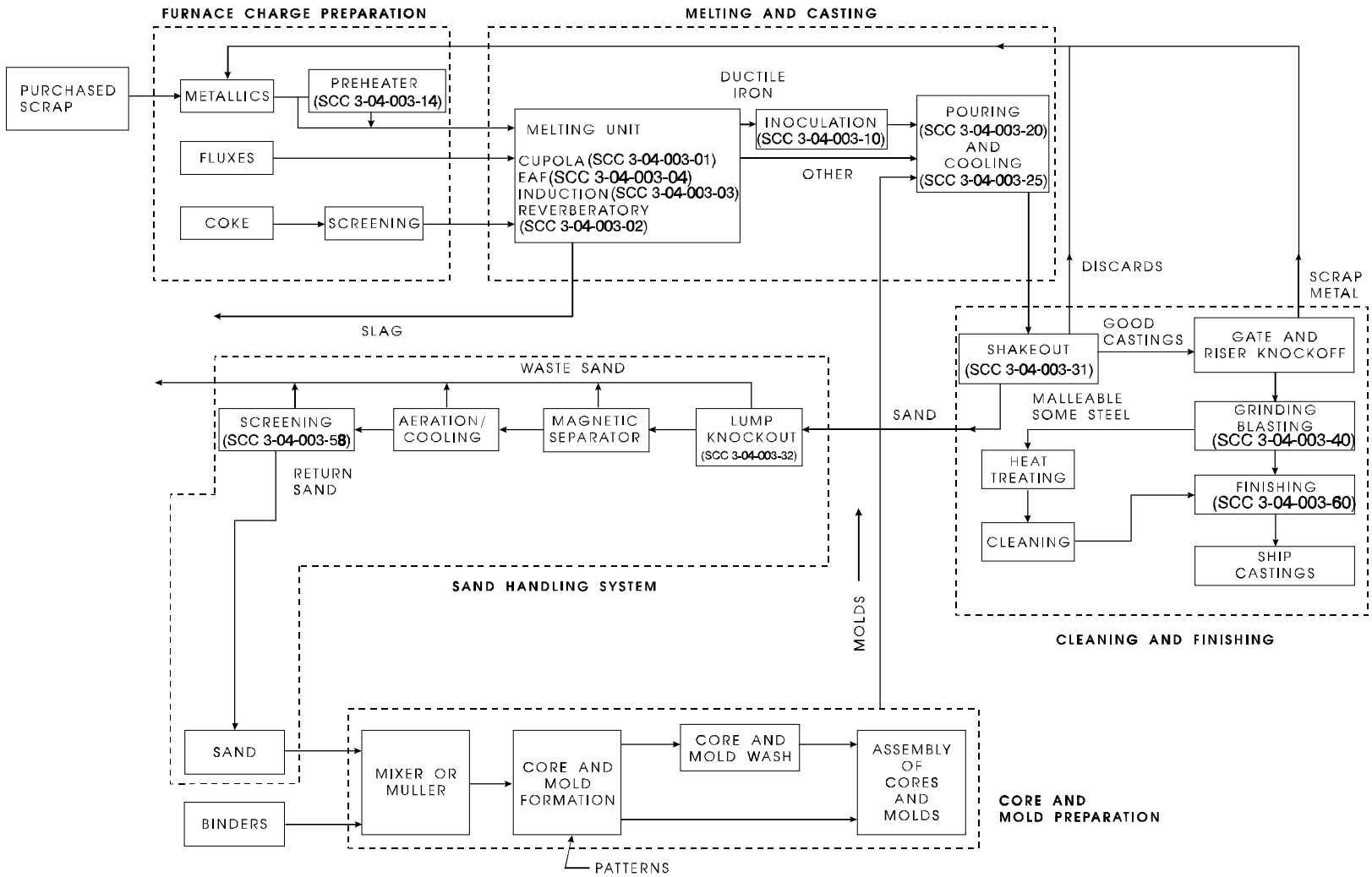

Figure 12.10-1. Flow diagram of a typical iron foundry. (Source Classification Codes in parentheses.)

ladle of molten iron. A turbulent reaction takes place as the magnesium boils under the heat of the molten iron. As much as 65 percent of the magnesium may be evaporated. The magnesium vapor ignites in air, creating large amounts of smoke.

In the pour-over method, magnesium alloy is placed in the bottom of a vessel and molten iron is poured over it. Although this method produces more emissions and is less efficient than plunging, it requires no capital equipment other than air pollution control equipment.

12.10.2.2.3 Slag Removal And Molding -

Slag is removed from furnaces through a tapping hole or door. Since slag is lighter than molten iron, it remains on top of the molten iron and can be raked or poured out. After slag has been removed, the iron is cast into molds.

12.10.2.3 Mold And Core Production -

Molds are forms used to shape the exterior of castings. Cores are molded sand shapes used to make internal voids in castings. Molds are prepared from wet sand, clay, and organic additives, and are usually dried with hot air. Cores are made by mixing sand with organic binders or organic polymers, molding the sand into a core, and baking the core in an oven. Used sand from castings shakeout is recycled and cleaned to remove any clay or carbonaceous buildup. The sand is screened and reused to make new molds.

12.10.2.4 Casting And Finishing -

Molten iron is tapped into a ladle or directly into molds. In larger, more mechanized foundries, filled molds are conveyed automatically through a cooling tunnel. The molds are then placed on a vibrating grid to shake the mold sand and core sand loose from the casting.

12.10.3 Emissions And Controls[9,31,52]

Emission points and types of emissions from a typical foundry are shown in Figure 12.10-2. Emission factors are presented in Tables 12.10-2, 12.10-3, 12.10-4, 12.10-5, 12.10-6, 12.10-7, 12.10-8, and 12.10-9.

12.10.3.1 Raw Material Handling And Preparation -

Fugitive particulate emissions are generated from the receiving, unloading, and conveying of raw materials. These emissions can be controlled by enclosing the points of disturbance (e. g., conveyor belt transfer points) and routing air from enclosures through fabric filters or wet collectors.

Scrap preparation with heat will emit smoke, organic compounds, and carbon monoxide; scrap preparation with solvent degreasers will emit organics. Catalytic incinerators and afterburners can control about 95 percent of organic and carbon monoxide emissions (see Section 4.6, "Solvent Degreasing").

12.10.3.2 Metal Melting -

Emissions released from melting furnaces include particulate matter, carbon monoxide, organic compounds, sulfur dioxide, nitrogen oxides, and small quantities of chloride and fluoride compounds. The particulates, chlorides, and fluorides are generated from incomplete combustion of carbon additives, flux additions, and dirt and scale on the scrap charge. Organic material on scrap and furnace temperature affect the amount of carbon monoxide generated. Fine particulate fumes emitted from melting furnaces results from the condensation of volatilized metal and metal oxides. The highest concentrations of furnace emissions occur when furnace doors are open during charging,

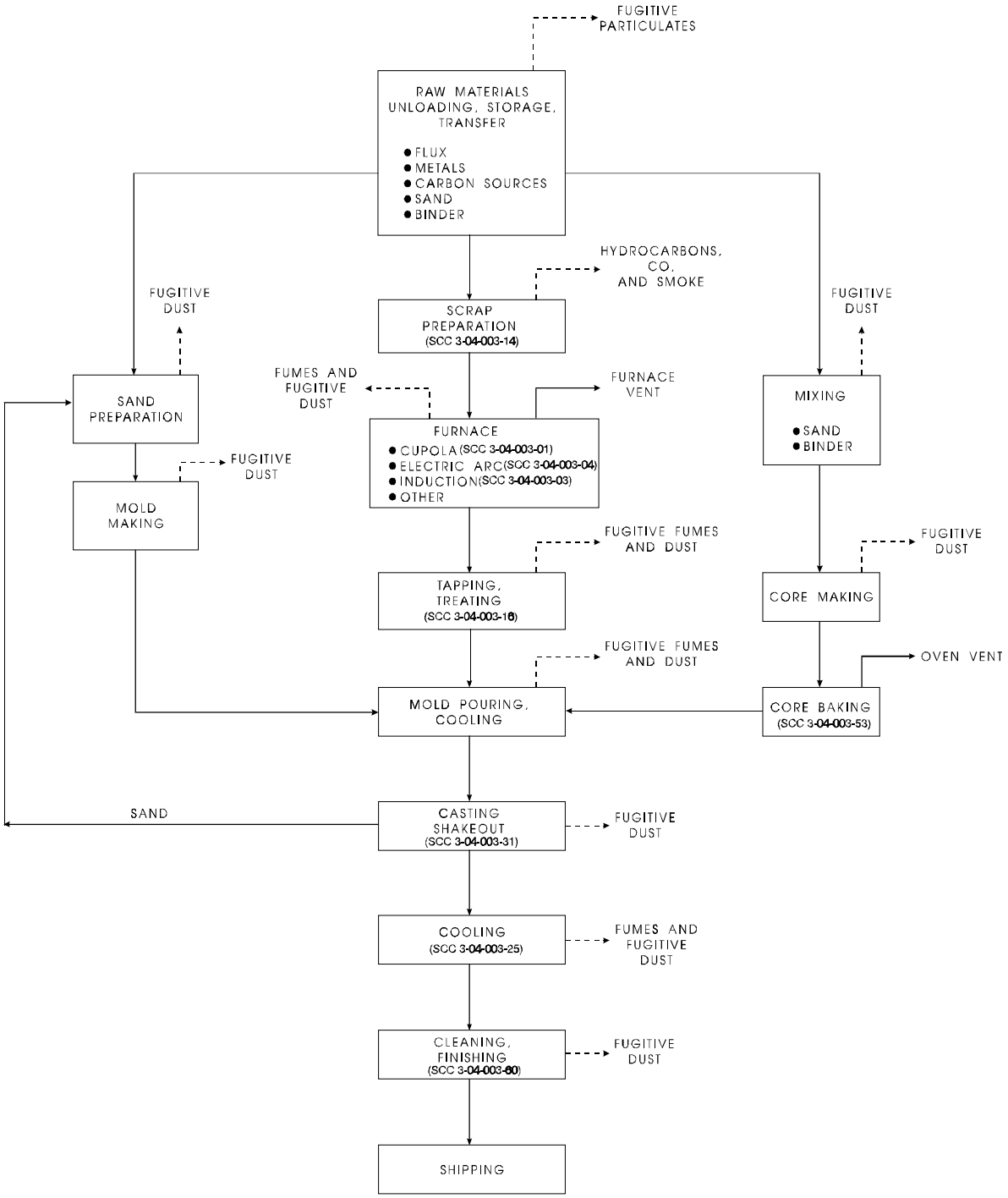

Figure 12.10-2. Emission points in a typical iron foundry.
(Source Classification Codes in parentheses.)

Table 12.10-2 (Metric Units). PARTICULATE EMISSION FACTORS FOR IRON FURNACES[a]

Process	Control Device	Total Particulate	EMISSION FACTOR RATING
Cupola (SCC 3-04-003-01)	Uncontrolled[b]	6.9	E
	Scrubber[c]	1.6	C
	Venturi scrubber[d]	1.5	C
	Electrostatic precipitator[e]	0.7	E
	Baghouse[f]	0.3	E
	Single wet cap[g]	4.0	E
	Impingement scrubber[g]	2.5	E
	High-energy scrubber[g]	0.4	E
Electric arc furnace (SCC 3-04-003-04)	Uncontrolled[h]	6.3	C
	Baghouse[j]	0.2	C
Electric induction furnace (SCC 3-04-003-03)	Uncontrolled[k]	0.5	E
	Baghouse[m]	0.1	E
Reverberatory (SCC 3-04-003-02)	Uncontrolled[n]	1.1	E
	Baghouse[m]	0.1	E

[a] Emission Factors are expressed in kg of pollutant/Mg of gray iron produced.
[b] References 1,7,9,10. SCC = Source Classification Code.
[c] References 12,15. Includes averages for wet cap and other scrubber types not already listed.
[d] References 12,17,19.
[e] References 8,11.
[f] References 12-14.
[g] References 8,11,29,30.
[h] References 1,6,23.
[j] References 6,23,24.
[k] References 1,12. For metal melting only.
[m] Reference 4.
[n] Reference 1.

Table 12.10-3 (English Units). PARTICULATE EMISSION FACTORS FOR IRON FURNACES[a]

Process	Control Device	Total Particulate	EMISSION FACTOR RATING
Cupola (SCC 3-04-003-01)	Uncontrolled[b]	13.8	E
	Scrubber[c]	3.1	C
	Venturi scrubber[d]	3.0	C
	Electrostatic precipitator[e]	1.4	E
	Baghouse[f]	0.7	E
	Single wet cap[g]	8.0	E
	Impingement scrubber[g]	5.0	E
	High energy scrubber[g]	0.8	E
Electric arc furnace (SCC 3-04-003-04)	Uncontrolled[h]	12.7	C
	Baghouse[j]	0.4	C
Electric induction furnace (SCC 3-04-003-03)	Uncontrolled[k]	0.9	E
	Baghouse[m]	0.2	E
Reverberatory (SCC 3-04-003-02)	Uncontrolled[n]	2.1	E
	Baghouse[m]	0.2	E

[a] Emission Factors expressed as lb of pollutant/ton of gray iron produced.
[b] References 1,7,9,10. SCC = Source Classification Code.
[c] References 12,15. Includes averages for wet cap and other scrubber types not already listed.
[d] References 12,17,19.
[e] References 8,11.
[f] References 12-14.
[g] References 8,11,29,30.
[h] References 1,6,23.
[j] References 6,23,24.
[k] References 1,12. For metal melting only.
[m] Reference 4.
[n] Reference 1.

Table 12.10-4 (Metric Units). CRITERIA GASEOUS AND LEAD EMISSION FACTORS FOR IRON FOUNDRIES[a]

Furnace Type	CO	EMISSION FACTOR RATING	SO_2	EMISSION FACTOR RATING	NO_x	EMISSION FACTOR RATING	VOC	EMISSION FACTOR RATING	Lead[b]	EMISSION FACTOR RATING
Cupola (SCC 3-04-003-01)										
Uncontrolled	73[c]	E	0.6S[d]	E	ND	NA	ND	NA	0.05-0.6	B
High energy scrubber	73	E	0.3S[d]	E	ND	NA	ND	NA	ND	NA
Electric arc[e] (SCC 3-04-003-04)	0.5-19	E	Neg	E	0.02-0.3	E	0.03-0.15	E	ND	NA
Electric induction[f] (SCC 3-04-003-03)	Neg	E	Neg	E	ND	NA	ND	NA	0.005-0.05	B
Reverberatory (SCC 3-04-003-02)	ND	NA	ND	NA	ND	NA	ND	NA	0.006-0.07	B

[a] Expressed as kg of pollutant/Mg of gray iron produced. SCC = Source Classification Code. Neg = negligible. ND = no data. NA = not applicable
[b] References 11,31,34.
[c] Reference 2.
[d] Reference 4. S = % sulfur in the coke. Assumes 30% of sulfur is converted to SO_2.
[e] Reference 4,6.
[f] References 8,11,29-30.

Table 12.10-5 (English Units). CRITERIA GASEOUS AND LEAD EMISSION FACTORS FOR IRON FOUNDRIES[a]

Furnace Type	CO	EMISSION FACTOR RATING	SO_2	EMISSION FACTOR RATING	NO_x	EMISSION FACTOR RATING	VOC	EMISSION FACTOR RATING	Lead[b]	EMISSION FACTOR RATING
Cupola (SCC 3-04-003-01)										
Uncontrolled	145[c]	E	1.2S[d]	E	ND	NA	ND	NA	0.1-1.1	B
High energy scrubber	145	E	0.6S[d]	E	ND	NA	ND	NA	ND	NA
Electric arc[e] (SCC 3-04-003-04)	1-37	E	Neg	E	0.04-0.6	E	0.06-0.3	E	ND	NA
Electric induction[f] (SCC 3-04-003-03)	Neg	E	Neg	E	ND	NA	ND	NA	0.009-0.1	B
Reverberatory (SCC 3-04-003-02)	ND	NA	ND	NA	ND	NA	ND	NA	0.012-0.14	B

[a] Expressed as lb of pollutant/ton of gray iron produced. SCC = Source Classification Code. Neg = negligible. ND = no data. NA = not applicable.
[b] References 11,31,34.
[c] Reference 2.
[d] Reference 4. S = % sulfur in the coke. Assumes 30% of sulfur is converted to SO_2.
[e] Reference 4,6.
[f] References 8,11,29-30.

Table 12.10-6 (Metric Units). PARTICULATE EMISSION FACTORS FOR ANCILLARY OPERATIONS AND FUGITIVE SOURCES AT GRAY IRON FOUNDRIES[a]

Process	Control Device	Total Emission Factor	EMISSION FACTOR RATING	Emitted To Work Environment	EMISSION FACTOR RATING	Emitted To Atmosphere	EMISSION FACTOR RATING
Scrap and charge handling, heating[b] (SCC 3-04-003-15)	Uncontrolled	0.3	E	0.25	E	0.1	E
Magnesium treatment[c] (SCC 3-04-003-21)	Uncontrolled	0.9	E	0.9	E	0.2	E
Refining[d] (SCC 3-04-003-22)	Uncontrolled	1.5-2.5	E				
Pouring, cooling[e] (SCC 3-04-003-18)	Uncontrolled	2.1	E				
Shakeout[f] (SCC 3-04-003-31)	Uncontrolled[c]	1.6	E				
Cleaning, finishing[b] (SCC 3-04-003-40)	Uncontrolled	8.5	E	0.15	E	0.05	E
Sand handling (in kg/Mg sand handled) (SCC 3-04-003-50)	Uncontrolled[c]	1.8	E				
	Scrubber[g]	0.023	D				
	Baghouse[h]	0.10	E				
Core making, baking[b] (SCC 3-04-003-19)	Uncontrolled	0.6	E	0.6	E	0.6	E

[a] Expressed as kg of pollutant/Mg of gray iron produced. SCC = Source Classification Code.
[b] Reference 4.
[c] Reference 1,4.
[d] Reference 35.
[e] References 1,3,25.
[f] Reference 1.
[g] References 12,27.
[h] Reference 12.

Table 12.10-7 (English Units). PARTICULATE EMISSION FACTORS FOR ANCILLARY OPERATIONS AND FUGITIVE SOURCES AT GRAY IRON FOUNDRIES[a]

Process	Control Device	Total Emission Factor	EMISSION FACTOR RATING	Emitted To Work Environment	EMISSION FACTOR RATING	Emitted To Atmosphere	EMISSION FACTOR RATING
Scrap and charge handling, heating[b] (SCC 3-04-003-15)	Uncontrolled	0.6	E	0.5	E	0.2	E
Magnesium treatment[c] (SCC 3-04-003-21)	Uncontrolled	1.8	E	1.8	E	0.4	E
Refining[d] (SCC 3-04-003-22)	Uncontrolled	3 - 5	E				
Pouring, cooling[e] (SCC 3-04-003-18)	Uncontrolled	4.2	E				
Shakeout[f] (SCC 3-04-003-31)	Uncontrolled[c]	3.2	E				
Cleaning, finishing[b] (SCC 3-04-003-40)	Uncontrolled	17	E	0.3	E	0.1	E
Sand handling (in kg/Mg sand handled) (SCC 3-04-003-50)	Uncontrolled[c] Scrubber[g] Baghouse[h]	3.6 0.046 0.20	E D E				
Core making, baking[b] (SCC 3-04-003-19)	Uncontrolled	1.1	E	1.1	E	1.1	E

[a] Expressed as lb of pollutant/ton of gray iron produced. SCC = Source Classification Code.
[b] Reference 4.
[c] Reference 1,4.
[d] Reference 35.
[e] References 1,3,25.
[f] Reference 1.
[g] References 12,27.
[h] Reference 12.

Table 12.10-8 (Metric Units). PARTICLE SIZE DISTRIBUTION DATA AND EMISSION FACTORS FOR GRAY IRON FOUNDRIES[a]

Source	Particle Size (µm)	Cumulative Mass % ≤ Stated Size[b]	Cumulative Mass Emission Factor (kg/Mg metal)	EMISSION FACTOR RATING
Cupola furnace[b] (SCC 3-04-003-01)				
Uncontrolled	0.5	44.3	3.1	C
	1.0	69.1	4.8	
	2.0	79.6	5.5	
	2.5	84.0	5.8	
	5.0	90.1	6.2	
	10.0	90.1	6.2	
	15.0	90.6	6.3	
		100.0	6.9	
Controlled by baghouse	0.5	83.4	0.33	E
	1.0	91.5	0.37	
	2.0	94.2	0.38	
	2.5	94.9	0.38	
	5.0	94.9	0.38	
	10.0	94.9	0.38	
	15.0	95.0	0.38	
		100.0	0.4	
Controlled by venturi scrubber[c]	0.5	56.0	0.84	C
	1.0	70.2	1.05	
	2.0	77.4	1.16	
	2.5	77.7	1.17	
	5.0	77.7	1.17	
	10.0	77.7	1.17	
	15.0	77.7	1.17	
		100.0	1.50	
Electric arc furnace[d] (SCC 3-04-003-04)				
Uncontrolled	1.0	13.0	0.8	E
	2.0	57.5	3.7	
	5.0	82.0	5.2	
	10.0	90.0	5.8	
	15.0	93.5	6.0	
		100.0	6.4	

Table 12.10-8 (cont.)

Source	Particle Size (μm)	Cumulative Mass % ≤ Stated Size[b]	Cumulative Mass Emission Factor (kg/Mg metal)	EMISSION FACTOR RATING
Pouring, cooling[b] (SCC 3-04-0030-18)				
Uncontrolled	0.5	—[d]	ND	D
	1.0	19.0	0.40	
	2.0	20.0	0.42	
	2.5	24.0	0.50	
	5.0	34.0	0.71	
	10.0	49.0	1.03	
	15.0	72.0	1.51	
		100.0	2.1	
Shakeout[b] (SCC 3-04-003-31)				
Uncontrolled	0.5	23.0	0.37	E
	1.0	37.0	0.59	
	2.0	41.0	0.66	
	2.5	42.0	0.67	
	5.0	44.0	0.70	
	10.0	70.0	1.12	
	15.0	99.9	1.60	
		100.0	1.60	

[a] Emission Factor expressed as kg of pollutant/Mg of metal produced. Mass emission rate data available in Tables 12.10-2 and 12.10-6 to calculate size-specific emission factors. SCC = Source Classification Code. ND = no data.
[b] References 13,21,22,25,26.
[c] Pressure drop across venturi: approximately 25 kPa of water.
[d] Reference 3, Exhibit VI-15. Averaged from data on 2 foundries. Because original test data could not be obtained, EMISSION FACTOR RATING is E.

Table 12.10-9 (English Units). PARTICLE SIZE DISTRIBUTION DATA AND EMISSION FACTORS FOR GRAY IRON FOUNDRIES[a]

Source	Particle Size (μm)	Cumulative Mass % ≤ Stated Size[b]	Cumulative Mass Emission Factor (lb/ton metal)	EMISSION FACTOR RATING
Cupola furnace[b] (SCC 3-04-003-01)				
Uncontrolled	0.5	44.3	6.2	C
	1.0	69.1	9.6	
	2.0	79.6	11.0	
	2.5	84.0	11.6	
	5.0	90.1	12.4	
	10.0	90.1	12.4	
	15.0	90.6	12.6	
		100.0	13.8	
Controlled by baghouse	0.5	83.4	0.66	E
	1.0	91.5	0.74	
	2.0	94.2	0.76	
	2.5	94.9	0.76	
	5.0	94.9	0.76	
	10.0	95.0	0.76	
	15.0	100.0	0.80	
Controlled by venturi scrubber[c]	0.5	56.0	1.68	C
	1.0	70.2	2.10	
	2.0	77.4	2.32	
	2.5	77.7	2.34	
	5.0	77.7	2.34	
	10.0	77.7	2.34	
	15.0	77.7	2.34	
		100.0	3.0	
Electric arc furnace[d] (SCC 3-04-003-04)				
Uncontrolled	1.0	13.0	1.6	E
	2.0	57.5	7.4	
	5.0	82.0	10.4	
	10.0	90.0	11.6	
	15.0	93.5	12.0	
		100.0	12.8	

Table 12.10-9 (cont.)

Source	Particle Size (µm)	Cumulative Mass % ≤ Stated Size[b]	Cumulative Mass Emission Factor (lb/ton metal)	EMISSION FACTOR RATING
Pouring, cooling[b] (SCC 3-04-003-18)				
Uncontrolled	0.5	—[d]	ND	D
	1.0	19.0	0.80	
	2.0	20.0	0.84	
	2.5	24.0	1.00	
	5.0	34.0	1.42	
	10.0	49.0	2.06	
	15.0	72.0	3.02	
		100.0	4.2	
Shakeout[b] (SCC 3-04-003-31)				
Uncontrolled	0.5	23.0	0.74	E
	1.0	37.0	1.18	
	2.0	41.0	1.32	
	2.5	42.0	1.34	
	5.0	44.0	1.40	
	10.0	70.0	2.24	
	15.0	99.9	3.20	
		100.0	3.20	

[a] Emission factors are expressed as lb of pollutant/ton of metal produced. Mass emission rate data available in Tables 12.10-3 and 12.10-7 to calculate size-specific emission factors. SCC = Source Classification Code. ND = no data.
[b] References 13,21-22,25-26.
[c] Pressure drop across venturi: approximately 102 inches of water.
[d] Reference 3, Exhibit VI-15. Averaged from data on 2 foundries. Because original test data could not be obtained, EMISSION FACTOR RATING is E.

backcharging, alloying, slag removal, and tapping operations. These emissions can escape into the furnace building or can be collected and vented through roof openings. Emission controls for melting and refining operations involve venting furnace gases and fumes directly to a control device. Canopy hoods or special hoods near furnace doors and tapping points capture emissions and route them to emission control systems.

12.10.3.2.1 Cupolas -

Coke burned in cupola furnaces produces several emissions. Incomplete combustion of coke causes carbon monoxide emissions and sulfur in the coke gives rise to sulfur dioxide emissions. High energy scrubbers and fabric filters are used to control particulate emissions from cupolas and electric arc furnaces and can achieve efficiencies of 95 and 98 percent, respectively. A cupola furnace typically has an afterburner as well, which achieves up to 95 percent efficiency. The afterburner is located in the furnace stack to oxidize carbon monoxide and burn organic fumes, tars, and oils.

Reducing these contaminants protects the particulate control device from possible plugging and explosion.

Toxic emissions from cupolas include both organic and inorganic materials. Cupolas produce the most toxic emissions compared to other melting equipment.

12.10.3.2.2 Electric Arc Furnaces -

During melting in an electric arc furnace, particulate emissions of metallic and mineral oxides are generated by the vaporization of iron and transformation of mineral additives. This particulate matter is controlled by high-energy scrubbers (45 percent efficiency) and fabric filters (98 percent efficiency). Carbon monoxide emissions result from combustion of graphite from electrodes and carbon added to the charge. Hydrocarbons result from vaporization and incomplete combustion of any oil remaining on the scrap iron charge.

12.10.3.2.3 Electric Induction Furnaces -

Electric induction furnaces using clean steel scrap produce particulate emissions comprised largely of iron oxides. High emissions from clean charge emissions are due to cold charges, such as the first charge of the day. When contaminated charges are used, higher emissions rates result.

Dust emissions from electric induction furnaces also depend on the charge material composition, the melting method (cold charge or continuous), and the melting rate of the materials used. The highest emissions occur during a cold charge.

Because induction furnaces emit negligible amounts of hydrocarbon and carbon monoxide emissions and relatively little particulate, they are typically uncontrolled, except during charging and pouring operations.

12.10.3.2.4 Refining -

Particulate emissions are generated during the refining of molten iron before pouring. The addition of magnesium to molten metal to produce ductile iron causes a violent reaction between the magnesium and molten iron, with emissions of magnesium oxides and metallic fumes. Emissions from pouring consist of metal fumes from the melt, and carbon monoxide, organic compounds, and particulate evolved from the mold and core materials. Toxic emissions of particulate, arsenic, chromium, halogenated hydrocarbons, and aromatic hydrocarbons are released in the refining process. Emissions from pouring normally are captured by a collection system and vented, either controlled or uncontrolled, to the atmosphere. Emissions continue as the molds cool. A significant quantity of particulate is also generated during the casting shakeout operation. These fugitive emissions are controlled by either high energy scrubbers or fabric filters.

12.10.3.3 Mold And Core Production -

The major pollutant emitted in mold and core production operations is particulate from sand reclaiming, sand preparation, sand mixing with binders and additives, and mold and core forming. Organics, carbon monoxide, and particulate are emitted from core baking and organic emissions from mold drying. Fabric filters and high energy scrubbers generally are used to control particulate from mold and core production. Afterburners and catalytic incinerators can be used to control organics and carbon monoxide emissions.

In addition to organic binders, molds and cores may be held together in the desired shape by means of a cross-linked organic polymer network. This network of polymers undergoes thermal decomposition when exposed to the very high temperatures of casting, typically 1400°C (2550°F). At these temperatures it is likely that pyrolysis of the chemical binder will produce a complex of free

radicals which will recombine to form a wide range of chemical compounds having widely differing concentrations.

There are many different types of resins currently in use having diverse and toxic compositions. There are no data currently available for determining the toxic compounds in a particular resin which are emitted to the atmosphere and to what extent these emissions occur.

12.10.3.4 Casting And Finishing -

Emissions during pouring include decomposition products of resins, other organic compounds, and particulate matter. Finishing operations emit particulates during the removal of burrs, risers, and gates, and during shot blast cleaning. These emissions are controlled by cyclone separators and fabric filters. Emissions are related to mold size, mold composition, sand to metal ratio, pouring temperature, and pouring rate.

References For Section 12.10

1. *Summary Of Factors Affecting Compliance By Ferrous Foundries, Volume I: Text*, EPA-340/1-80-020, U. S. Environmental Protection Agency, Washington DC. January 1981.

2. *Air Pollution Aspects Of The Iron Foundry Industry*, APTD-0806, U. S. Environmental Protection Agency, Research Triangle Park, NC. February 1971.

3. *Systems Analysis Of Emissions And Emission Control In The Iron Foundry Industry, Volume II: Exhibits*, APTD-0645, U. S. Environmental Protection Agency, Research Triangle Park, NC. February 1971.

4. J. A. Davis, *et al*, *Screening Study On Cupolas And Electric Furnaces In Gray Iron Foundries*, EPA Contract No. 68-01-0611, Battelle Laboratories, Columbus, OH. August 1975.

5. R. W. Hein, *et al*, *Principles Of Metal Casting*, McGraw-Hill, New York, 1967.

6. P. Fennelly and P. Spawn, *Air Pollution Control Techniques For Electric Arc Furnaces In The Iron And Steel Foundry Industry*, EPA-450/2-78-024, U. S. Environmental Protection Agency, Research Triangle Park, NC. June 1978.

7. R. D. Chmielewski and S. Calvert, *Flux Force/Condensation Scrubbing For Collecting Fine Particulate From Iron Melting Cupola*, EPA-600/7-81-148, U. S. Environmental Protection Agency, Cincinnati, OH, September 1981.

8. W. F. Hammond and S. M. Weiss, "Air Contaminant Emissions From Metallurgical Operations In Los Angeles County", presented at the Air Pollution Control Institute, Los Angeles, CA, July 1964.

9. *Particulate Emission Test Report On A Gray Iron Cupola At Cherryville Foundry Works, Cherryville, NC*, Department Of Natural And Economic Resources, Raleigh, NC, December 18, 1975.

10. J. W. Davis and A. B. Draper, *Statistical Analysis Of The Operating Parameters Which Affect Cupolas Emissions*, DOE Contract No. EY-76-5-02-2840.*000, Center For Air Environment Studies, Pennsylvania State University, University Park, PA, December 1977.

11. *Air Pollution Engineering Manual*, Second Edition, AP-40, U. S. Environmental Protection Agency, Research Triangle Park, NC, May 1973. Out of print.

12. Written communication from Dean Packard, Department Of Natural Resources, Madison, WI, to Douglas Seeley, Alliance Technology, Bedford, MA, April 15, 1982.

13. *Particulate Emissions Testing At Opelika Foundry*, Birmingham, AL, Air Pollution Control Commission, Montgomery, AL, November 1977 - January 1978.

14. Written communication from Minnesota Pollution Control Agency, St. Paul, MN, to Mike Jasinski, Alliance Technology, Bedford, MA, July 12, 1982.

15. *Stack Test Report, Dunkirk Radiator Corporation Cupola Scrubber*, State Department Of Environmental Conservation, Region IX, Albany, NY, November 1975.

16. *Particulate Emission Test Report For A Scrubber Stack For A Gray Iron Cupola At Dewey Brothers, Goldsboro, NC*, Department Of Natural Resources, Raleigh, NC, April 7, 1978.

17. *Stack Test Report, Worthington Corp. Cupola*, State Department Of Environmental Conservation, Region IX, Albany, NY, November 4-5, 1976.

18. *Stack Test Report, Dresser Clark Cupola Wet Scrubber, Orlean, NY*, State Department Of Environmental Conservation, Albany, NY, July 14 & 18, 1977.

19. *Stack Test Report, Chevrolet Tonawanda Metal Casting, Plant Cupola #3 And Cupola #4, Tonawanda, NY*, State Department Of Environmental Conservation, Albany, NY, August 1977.

20. *Stack Analysis For Particulate Emission, Atlantic States Cast Iron Foundry/Scrubber*, State Department Of Environmental Protection, Trenton, NJ, September 1980.

21. S. Calvert, *et al*, *Fine Particle Scrubber Performance*, EPA-650/2-74-093, U. S. Environmental Protection Agency, Cincinnati, OH, October 1974.

22. S. Calvert, *et al*, *National Dust Collector Model 850 Variable Rod Module Venturi Scrubber Evaluation*, EPA-600/2-76-282, U. S. Environmental Protection Agency, Cincinnati, OH, December 1976.

23. *Source Test, Electric Arc Furnace At Paxton-Mitchell Foundry, Omaha, NB*, Midwest Research Institute, Kansas City, MO, October 1974.

24. *Source Test, John Deere Tractor Works, East Moline, IL, Gray Iron Electric Arc Furnace*, Walden Research, Willmington, MA, July 1974.

25. S. Gronberg, *Characterization Of Inhalable Particulate Matter Emissions From An Iron Foundry, Lynchburg Foundry, Archer Creek Plant*, EPA-600/X-85-328, U. S. Environmental Protection Agency, Cincinnati, OH, August 1984.

26. *Particulate Emissions Measurements From The Rotoclone And General Casting Shakeout Operations Of United States Pipe & Foundry, Inc., Anniston, AL*, Black, Crow And Eidsness, Montgomery, AL, November 1973.

27. *Report Of Source Emissions Testing At Newbury Manufacturing, Talladega, AL*, State Air Pollution Control Commission, Montgomery, AL, May 15-16, 1979.

28. *Particulate Emission Test Report For A Gray Iron Cupola At Hardy And Newson, La Grange, NC*, State Department Of Natural Resources And Community Development, Raleigh, NC, August 2-3, 1977.

29. H. R. Crabaugh, *et al*, "Dust And Fumes From Gray Iron Cupolas: How Are They Controlled In Los Angeles County?" *Air Repair*, 4(3):125-130, November 1954.

30. J. M. Kane, "Equipment For Cupola Control", *American Foundryman's Society Transactions*, 64:525-531, 1956.

31. *Control Techniques For Lead Air Emissions*, 2 Volumes, EPA-450/2-77-012, U. S. Environmental Protection Agency, Research Triangle Park, NC, December 1977.

32. W. E. Davis, *Emissions Study Of Industrial Sources Of Lead Air Pollutants, 1970*, APTD-1543, U. S. Environmental Protection Agency, Research Triangle Park, NC, April 1973.

33. Emission Test No. EMB-71-CI-27, Office Of Air Quality Planning And Standards, U. S. Environmental Protection Agency, Research Triangle Park, NC, February 1972.

34. Emission Test No. EMB-71-CI-30, Office Of Air Quality Planning And Standards, U. S. Environmental Protection Agency, Research Triangle Park, NC, March 1972.

35. John Zoller, *et al*, *Assessment Of Fugitive Particulate Emission Factors For Industrial Processes*, EPA-450/3-78-107, U. S. Environmental Protection Agency, Research Triangle Park, NC, September 1978.

36. John Jeffery, *et al*, *Gray Iron Foundry Industry Particulate Emissions: Source Category Report*, EPA-600/7-86-054, U. S. Environmental Protection Agency, Cincinnati, OH, December, 1986.

37. *PM-10 Emission Factor Listing Developed By Technology Transfer*, EPA-450/4-022, U. S. Environmental Protection Agency, Research Triangle Park, NC, November 1989.

38. *Generalized Particle Size Distributions For Use In Preparing Size Specific Particulate Emission Inventories*, EPA-450/4-86-013, U.S. Environmental Protection Agency, Research Triangle Park, NC, July 1986.

39. *Emission Factors For Iron Foundries—Criteria And Toxic Pollutants*, EPA Control Technology Center, Research Triangle Park, EPA-600/2-90-044. August 1990.

40. *Handbook Of Emission Factors*, Ministry Of Housing, Physical Planning And Environment.

41. *Steel Castings Handbook, Fifth Edition*, Steel Founders Society Of America, 1980.

42. *Air Pollution Aspects of the Iron Foundry Industry*, APTD-0806 (NTIS PB 204 712), U. S. Environmental Protection Agency, NC, 1971.

43. *Compilation Of Air Pollutant Emissions Factors*, AP-42, (NTIS PB 89-128631), Supplement B, Volume I, Fourth Edition, U. S. Environmental Protection Agency, 1988.

44. M. B. Stockton and J. H. E. Stelling, *Criteria Pollutant Emission Factors For The 1985 NAPAP* Emissions Inventory*, EPA-600/7-87-015 (NTIS PB 87-198735), U. S. Environmental Protection Agency, Research Triangle Park, NC, 1987. (*National Acid Precipitation Assessment Program)

45. V. H. Baldwin Jr., *Environmental Assessment Of Iron Casting*, EPA-600/2-80-021 (NTIS PB 80-187545), U. S. Environmental Protection Agency, Cincinnati, OH, 1980.

46. V. H. Baldwin, *Environmental Assessment Of Melting, Inoculation And Pouring*, American Foundrymen's Society, 153:65-72, 1982.

47. Temple Barker and Sloane, Inc., *Integrated Environmental Management Foundry Industry Study, Technical Advisory Panel*, presentation to the U. S. Environmental Protection Agency, April 4, 1984.

48. N. D. Johnson, *Consolidation Of Available Emission Factors For Selected Toxic Air Pollutants*, ORTECH International, 1988.

49. A. A. Pope, *et al*., *Toxic Air Pollutant Emission Factors—A Compilation For Selected Air Toxic Compounds And Sources*, EPA-450/2-88-006a (NTIS PB 89-135644), U. S. Environmental Protection Agency, Research Triangle Park, NC, 1988.

50. F. M. Shaw, *CIATG Commission 4 Environmental Control: Induction Furnace Emission*, commissioned by F. M. Shaw, British Cast Iron Research Association, Fifth Report, Cast Metals Journal, 6:10-28, 1982.

51. P. F. Ambidge and P. D. E. Biggins, *Environmental Problems Arising From The Use Of Chemicals In Moulding Materials*, BCIRA Report, 1984.

52. C. E. Bates and W. D. Scott, *The Decomposition Of Resin Binders And The Relationship Between Gases Formed And The Casting Surface Quality—Part 2: Gray Iron*, American Foundrymen's Society, Des Plains, IL, pp. 793-804, 1976.

53. R. H. Toeniskoetter and R. J. Schafer, *Industrial Hygiene Aspects Of The Use Of Sand Binders And Additives*, BCIRA Report 1264, 1977.

54. *Threshold Limit Values And Biological Exposure Indices For 1989-1990*; In: Proceedings Of American Conference Of Governmental Industrial Hygienists, OH, 1989.

55. *Minerals Yearbook, Volume I*, U. S. Department Of The Interior, Bureau Of Mines, 1989.

56. *Mark's Standard Handbook For Mechanical Engineers*, Eighth Edition, McGraw-Hill, 1978.