IN-12
141

R. B. Jacko & Associates
Environmental Consulting Engineers
Air Quality Management

2530 Shagbark Road
West Lafayette, IN 47906
Phone (317) 743-1320

Quantification of the Atmospheric Emissions of Particulates, Toxic Metals and Selected Acid Gases

Downstream from the

Cupola Venturi Scrubber

at

Auburn Foundry
635 W. 11th Street
Auburn, Indiana

by

R. Scott Flack

and

Robert B. Jacko, Ph.D.,P.E.

Test Date: 5/29/91

IN-12
142

Executive Summary

On May 29, 1991, two consecutive emission tests performed on the venturi scrubber controlled cupola stack at Auburn Foundry resulted in the quantification of particulates, selected toxic metals and acid gases. During the test series, the cupola was operating at a process weight rate of 44.4 tons/hr with an average volumetric gas flow rate of 33,700 scfm and a relatively low venturi gas side pressure drop of 40 in-h_2.

The two test average particulate emission rate was 36.7 lb/hr which was about 84% of the allowable emission rate of 43.5 lb/hr per IAC 326 6-3. A similar test performed by this author on the same stack in 1986 indicated a particulate mass emission rate of 5.1 lb/hr with a scrubber pressure drop of nearly 110 in-h_2. The lower venturi scrubber pressure drop during the 1991 tests probably accounts for the scrubber's reduced performance.

Of the eighteen metals analyzed in the cupola exhaust particulate, nine appear on the Federal EPA Air Toxics list. The combined emission rate of these nine metals projected on an annual basis was 9.52 tons/yr with only three of the nine comprising 99% of the total. These three metals were manganese at 5.34 tons/yr, lead at 2.60 tons/yr and cadmium at 1.49 tons/yr. These metal emissions are probably directly related to the scrap charge composition and alloy additions to the melt.

Of the five acid gases analyzed in the cupola exhaust gas, two appear on the Federal EPA air toxics list. The combined emission rate of these five acid gases projected on an annual basis was 4.72 tons/yr with the two from the air toxics list comprising only 13.20% of the total or 0.62 tons/yr. The two acid gases were HF at 0.33 tons/yr and HCL at 0.29 tons/yr.

Additional comparisions of toxic metal and acid gas emissions will be made in a future report when additional sampling has been completed at the plant. At that time, the Indiana Air Toxics Regulation may be promulgated and direct comparisons to allowable emission levels can be made.

IN 72-
143

Introduction

On May 29, 1991, two consecutive EPA method 5 type emission tests were performed downstream of the high energy venturi scrubber on the Auburn Foundry cupola stack in Auburn, Indiana. These tests were conducted to assess the condition of the high energy venturi scrubber which had been modified since the particulate compliance tests performed by Dr. Robert Jacko at this same site in August of 1986. In addition, the tests were performed to gather toxic pollutant emission data as part of a continuing plant-wide survey of toxic air pollutants. The pollutant emissions quantified during this series of tests on the cupola scrubber included particulates, selected toxic metals and acid gases. This data will used in the future to determine compliance with federal and state air toxic regulations.

The stack gas samples were extracted by Dr. Robert Jacko and Mr. R. Scott Flack. Mr. Dann Hollenbeck, the Environmental Engineer at Auburn Foundry, was responsible for the sampling site preparation, coordination of the tests with production personnel and collecting process operating data.

Objectives

The purpose of these stack emission tests was to determine the mass emission rates of particulates and potential toxic air pollutants downstream of the Schneible venturi scrubber which controls the emissions from the cupola. The pollutants quantified using a method 5 sampling train included the following:

IN-72
144

Toxic Metals

Aluminum	Lead
Antimony	Magnesium
Arsenic	Manganese
Barium	Molybdenum
Beryllium	Nickel
Cadmium	Selenium
Chromium	Titanium
Copper	Zinc
Iron	Zirconium

Acid Gases

Hydrogen Fluoride
Hydrogen Chloride
Nitric Acid
Phosphoric Acid
Sulfuric Acid

Facility Description

The cupola at Auburn Foundry is a 76", water cooled cupola constructed by Modern Manufacturing Co. The design process weight rate for the unit is 40 tons of gray iron/hr. The particulate emissions from the cupola are controlled by a Schneible high energy venturi water scrubber currently operating near 40.0 inches of water pressure drop. During the series of particulate compliance tests in August 1986, prior to modifications to the cupola and scrubber system, the venturi scrubber operated near 110 inches of water pressure drop. After leaving the venturi scrubber, the hot cupola exhaust gas tangentially enters the base of the stack. Cyclonic flow predominates in the stack acting to remove large water droplets before the gas leaves the stack. Two perpendicular, 4' high flow straighteners oriented vertically one above the other were

inserted across the stack just below the roof line in order to eliminate the cyclonic flow for sampling purposes. Figure 1 shows an elevation view of the stack which depicts the location of the flow straighteners and the sampling ports.

Table 1 contains the cupola process weight rate and the scrubber pressure drop for each of the two stack tests. Appendix 1 contains the raw process data for the cupola along with additional operating parameters recorded for the scrubber.

Table 1: Process Weight Rates for the Cupola and Scrubber Pressure Drops Recorded During the Stack Tests on 5/29/91

Time of Day (Test No.)	Elapsed Time (hrs)	Process Weight Rate (tons/hr)	Scrubber Pressure Drop (in-water)
8:00 am-9:24 am (1)	1.40	41.73	39.0
10:41 am-12:21 pm (2)	1.67	46.97	39.8
Average		44.35	39.4

Note: The process weight rate reflects the rate of charging of all materials to the cupola. Each batch charge was composed of coke, silicon, limestone, manganese, casting returns, P-cast and scrap steel.

IN-12-146

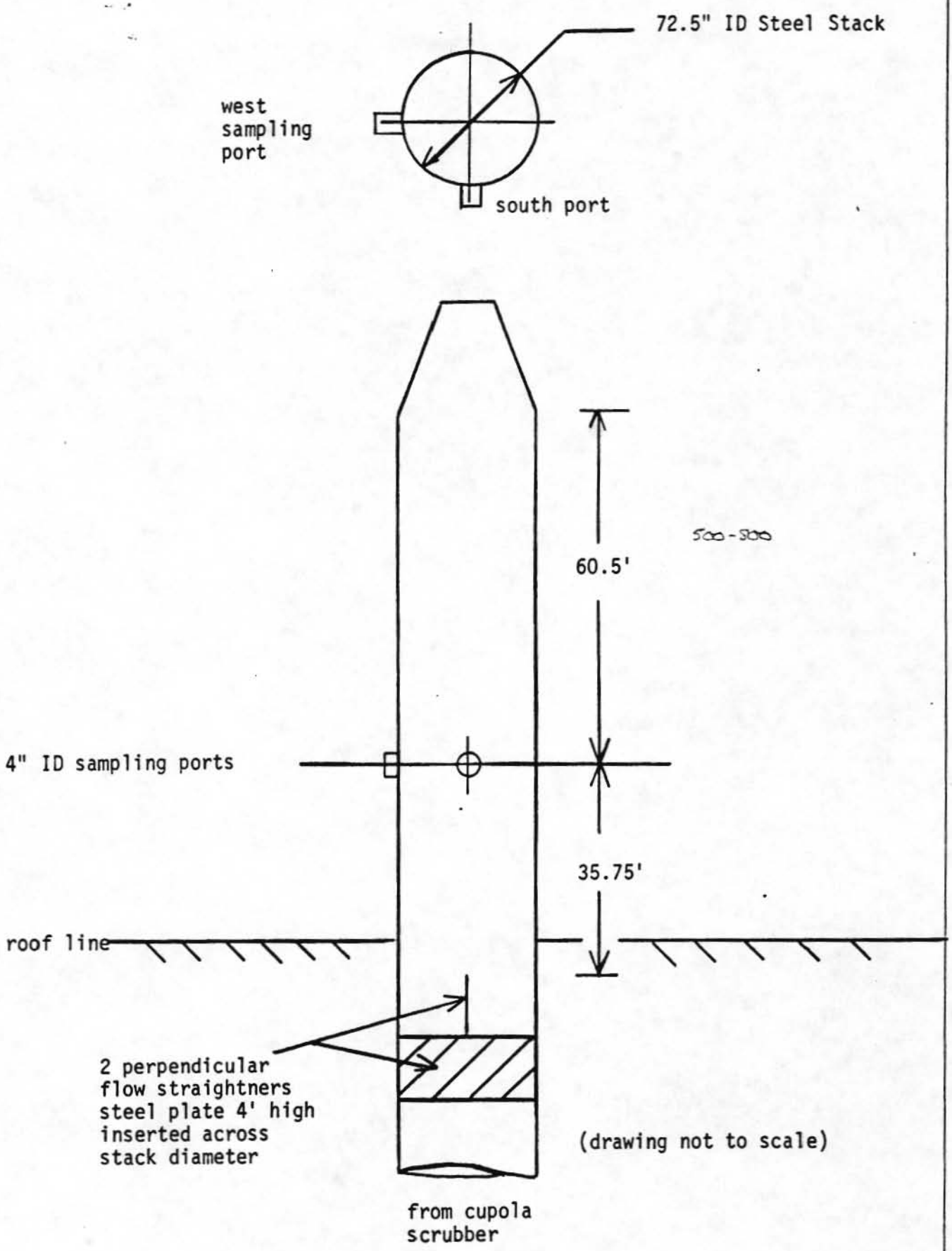

Figure 1: Elevation View of Auburn Foundry Cupola Scrubber Stack

Sampling Hardware and Methodology

The sampling procedures used throughout these tests were in accordance with those outlined in the Federal Register Vol. 36, number 247 on December 23, 1971 entitled: "Environmental Protection Agency - standards of Performance for New stationary Sources" and revisions published in the August 18, 1977 Federal Register, part II as well as others to date except where noted. Figure 2 is a schematic of the method 5 sampling train used to extract the stack gas samples. A 5'long glass lined heated probe together with a 0.3005" I.D. goose-neck sampling nozzle (SN L107), a co-located "S" type pitot tube (SN G5002) and stack temperature thermistor were used to traverse two perpendicular diameters of the cupola scrubber stack.

An Andersen control case (SN CC101) was used to extract the sample gas and measure the sample volumes and other necessary pressures and temperatures. Appendix 2 contains the calibration data for the sampling equipment. All of the calibrations were performed in the authors' laboratory in West Lafayette, Indiana.

Each method 5 sample case was assembled as follows. A 5" glass fiber filter (Whatman type 934-AH) was used in the front half of the sample case in order to collect particulates and toxic metals. The first and second impingers were each filled with 200 mls of distilled water to absorb the acid gases. The third impinger was left empty to serve as a mist trap. The condensate and rinses from the third impinger were combined with the contents and rinses from the first and second impingers for the acid gas analyses. Finally, the fourth impinger was charged

IN 72
148

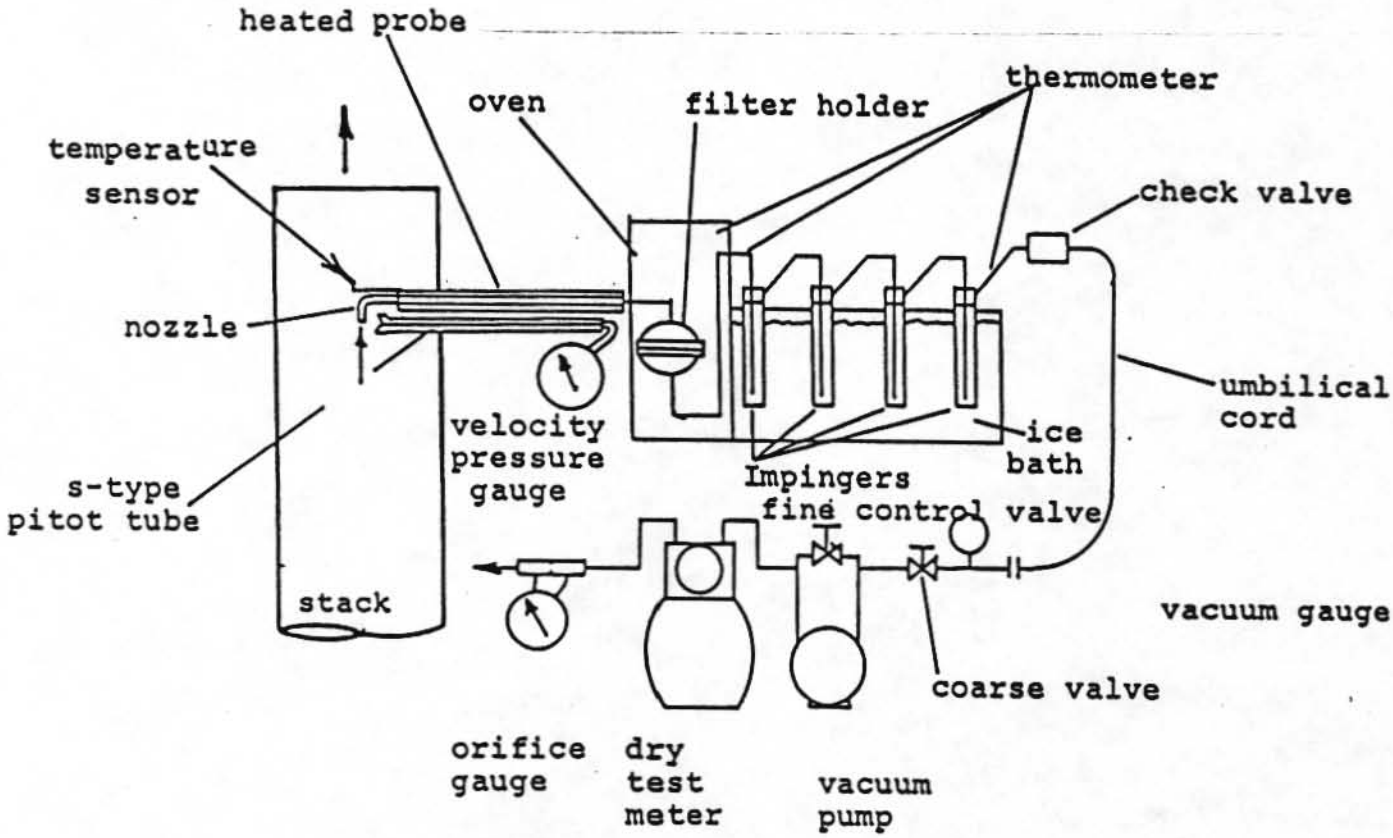

Figure 2: EPA Method 5 Sampling Train for Particulates, Metals and Acid Gases

with 200 grams of dried silica gel.

A Bacharach Fyrite kit was used to measure the oxygen and carbon dioxide content of the cupola scrubber stack gas. Sample gas was drawn into the Fyrite kit using a rubber squeeze bulb connected to a 4' coil of 1/4" O.D. aluminum tubing.

The horizontal sampling plane (refer to Figure 1) was located 35.75' (6.0 duct diameters) downstream from the flow straighteners inserted into the 72.5" I.D. cupola scrubber stack and 60.5' (10.0 diameters) upstream from the stack outlet. Access to the stack gas was provided via two 4" I.D. sampling ports located on the south and west faces of the stack. Per EPA method 1, twenty-four sampling traverse points (twelve per diameter) were selected. The distance from the stack inner wall to each traverse point was as follows:

Traverse Point	Distance from Stack Wall (inches)
1	1.5
2	4.9
3	8.6
4	12.8
5	18.1
6	25.8
7	46.7
8	54.3
9	59.7
10	63.9
11	67.6
12	71.0

Method 5 Sampling and Recovery Procedures

The method 5 sampling train was operated isokinetically for 72.0 minutes during the replicate tests. Per EPA method 5 procedures, at least 30 dscf of sample gas was collected during

each test. Appendix 3 contains copies of the original field data sheets for the two test runs.

At the completion of each test run, the sampling probe and nozzle were backwashed on-site using distilled acetone. The backwashes were stored in sealed polyethylene bottles. An acetone blank was prepared from the same bottle of acetone used for the probe backwashes.

The sample cases were recovered in the authors' lab in West Lafayette, Indiana. Each 5" sample case filter was desiccated and post-weighed using a Mettler M5 analytical balance with a resolution of 0.1 mg. The probe backwash from each run (and the blank) was also gravimetrically analyzed for particulate matter.

The filters and solid residue from each sample were analyzed for eighteen metals using atomic absorption spectroscopy by EMS Laboratories, Inc. in Indianapolis, Indiana. Appendix 4 contains a copy of the sample log sheet which accompanied the two samples and one blank which were hand delivered to EMS for the metals analyses. Appendix 5 contains copies of the analytical results from the metals analyses provided by EMS.

The contents from the first three impingers and their associated distilled water rinses from each sample case were measured volumetrically and stored in a sealed 1-liter polyethylene bottle for subsequent acid gas analyses. A blank composed of 200 mls of distilled water from the same batch of water used in the sample cases was also prepared for acid gas analyses. The three samples were shipped to Applied Research and Development Laboratory, Inc. (ARDL) in Mt. Vernon, Illinois for acid gas analyses. Ion chromatography was used to determine the

anion concentration associated with each of the five acids (see Objectives section). Appendix 6 contains a copy of the log sheet submitted with these samples. Appendix 7 contains a copy of the laboratory report provided by ARDL, Inc.

Results and Discussion

Tables 2 and 3 contain selected sampling and stack gas parameters from the two stack tests performed on the cupola scrubber stack. Reference to these tables shows that the isokinetic percentages were within the expected and desirable range of 100% ±10%. Also included in each of these tables are the stack gas sample volume, stack gas moisture percentage, oxygen and carbon dioxide contents, average stack gas temperature and the stack gas volumetric flow rate. Appendix 8 contains the supporting computer calculations for the data provided in Tables 2 and 3.

Particulate Emissions

Table 4 summarizes the particulate emissions measured downstream of the cupola scrubber. Reference to Table 4 indicates that the particulate mass emission rates ranged from 33.54 to 39.77 lbs/hr with an average of 36.66 lbs-particulate/hr. Appendix 8 contains the supporting calculations. These relatively high particulate mass emission rates correlate with our informal cupola stack opacity obervations during each stack test.

Per IAC 326 6-3, section 2, paragraph c, the allowable particulate emission rate for a cupola processing 44.35 tons/hr is 43.5 lbs-particulate/hr. Thus, the current average particulate emission rate of 36.66 lbs/hr from the cupola is 84.3% of the allowable standard.

Recall that the pressure drop across the venturi scrubber

Table 2: Selected Sampling and Stack Gas Parameters; Auburn Cupola Scrubber Stack, Run 1, 5/29/91

SAMPLING PARAMETERS
****

Control Case ID	CC101
Sample Case ID	SC101
Probe ID	G5002
CP, Pitot Tube Correction Factor	0.857
Nozzle Diameter, Inches	0.3005
TM, Avg. Meter Temperature, Rankine	553.94
Sampling Time, Minutes	72.00
VTOT,STD, Sample Vol at Standard Cond., Cu.Ft.	35.51
Stack Cross Sectional Area, Square Feet	28.67
PB, Barometric Pressure, Inches-Hg	29.05
I, Isokinetic Percentage	93.51

STACK PARAMETERS
****

CO2, Carbon Dioxide, Percent	11.00
O2, Oxygen, Percent	9.75
BWO, Moisture Percentage by Volume	28.29
MD, Molecular Weight Dry Basis	30.15
TS, Avg. Gas Temperature, Rankine	625.88
TS, Avg. Gas Temperature, Farenheit	165.88
PS, Absolute Static Pressure, Inches-Hg	29.05
VS, Gas Velocity, Ft/Sec	30.39
QS,STD, Vol. Flow Rate, Standard Conditions, SCFM	30726

Table 3: Selected Sampling and Stack Gas Parameters; Auburn Cupola Scrubber Stack, Run 2, 5/29/91

SAMPLING PARAMETERS
****

Control Case ID	CC101
Sample Case ID	SC102
Probe ID	G5002
CP, Pitot Tube Correction Factor	0.857
Nozzle Diameter, Inches	0.3005
TM, Avg. Meter Temperature, Rankine	568.79
Sampling Time, Minutes	72.00
VTOT,STD, Sample Vol at Standard Cond., Cu.Ft.	40.86
Stack Cross Sectional Area, Square Feet	28.67
PB, Barometric Pressure, Inches-Hg	29.05
I, Isokinetic Percentage	90.14

STACK PARAMETERS
****

CO2, Carbon Dioxide, Percent	10.75
O2, Oxygen, Percent	9.50
BWO, Moisture Percentage by Volume	27.70
MD, Molecular Weight Dry Basis	30.10
TS, Avg. Gas Temperature, Rankine	628.21
TS, Avg. Gas Temperature, Farenheit	168.21
PS, Absolute Static Pressure, Inches-Hg	29.05
VS, Gas Velocity, Ft/Sec	36.12
QS,STD, Vol. Flow Rate, Standard Conditions, SCFM	36681

IN-12
155

Table 4: Particulate Concentrations and Mass Emission Rates Measured Downstream of the Cupola Scrubber; 5/29/91

Run No.	Particulate Concentration (grains/dscf)	Particulate Mass Emission Rate (lb/hr)
1	0.1273	33.54
2	0.1265	39.77
Average	0.1269	36.66

note: dscf = dry standard cubic feet @ 68 F, 29.92 in-Hg

during the May 29, 1991 tests averaged approximately 40 inches of water. The venturi pressure drop during the 1986 tests performed by R.B. Jacko averaged nearly 110 inches of water. The particulate emission rate during the 1986 tests averaged only 5.1 lbs/hr with a cupola process weight average of 26.3 tons/hr. For the 1991 tests, the cupola processing rate did increase by almost 69% (44.35 tons/hr during the 1991 tests versus 26.3 tons/hr during the 1986 tests), but the particulate emissions downsteam of the scrubber increased nearly 619%. Because the scrubber is currently operating at a significantly lower pressure drop compared to 1986, the particulate control efficiency has dropped appreciably.

Toxic Metal Emissions

Table 5 summarizes the hourly mass emission rates and projected annual emission rates of eighteen metals quantified in the cupola scrubber exhaust during the two stack tests performed May 29, 1991. Appendix 5 contains a copy of the analytical results provided by EMS Laboratories, Inc. Appendix 8 contains the supporting computer generated calculations for the data presented in Table 5. The projected annual emission rate for each metal was calculated using the average hourly mass emission rate of each metal from the two test runs projected for 8760 hrs/yr (continuous operation of the cupola).

Note that for the metals which were either non-detectable or which had a higher mass of metal in the blank than in the sample (i.e. aluminum, barium and titanium for run 1 and aluminum and

Table 5: Hourly and Projected Annual Mass Emission Rates of Eighteen Metals Quantified in the Cupola Scrubber Exhaust Gas; 5/29/91

Metal	Hourly Mass Emission Rate (lb/hr)			Projected Annual Mass Emission Rate
	Run 1	Run 2	Average	(tons/yr)
Aluminum	<1.14E-03	<1.18E-03	<1.16E-03	<5.08E-03
Antimony *	2.40E-03	2.96E-03	2.68E-03	1.17E-02
Arsenic *	4.88E-04	5.42E-04	5.15E-04	2.26E-03
Barium	<1.14E-03	1.59E-02	8.52E-03	3.73E-02
Beryllium *	<1.14E-03	<1.18E-03	<1.16E-03	<5.08E-03
Cadmium *	4.34E-03	6.75E-01	3.40E-01	1.49E+00
Chromium *	1.13E-02	1.30E-02	1.22E-02	5.32E-02
Copper	2.17E-02	3.44E-02	2.81E-02	1.23E-01
Iron	1.56E+00	2.21E+00	1.89E+00	8.26E+00
Lead *	5.14E-01	6.75E-01	5.95E-01	2.60E+00
Magnesium	2.97E-01	3.55E-01	3.26E-01	1.43E+00
Manganese *	1.14E+00	1.30E+00	1.22E+00	5.34E+00
Molybdenum	<1.14E-03	<1.18E-03	<1.16E-03	<5.08E-03
Nickel *	2.51E-03	2.96E-03	2.74E-03	1.20E-02
Selenium *	7.31E-04	9.48E-04	8.40E-04	3.68E-03
Titanium	<1.14E-03	<1.18E-03	<1.16E-03	<5.08E-03
Zinc	7.26E-01	8.83E-01	8.05E-01	3.52E+00
Zirconium	<1.14E-03	<1.18E-03	<1.16E-03	<5.08E-03

"<" indicates that the sample was non-detectable for the metal or that the blank was greater than the sample. For these metals a "worst case" emission rate was calculated using the analytical detection limit, refer to Appendix 8.

* Denotes metal included on the air toxics list recently promulgated under the federal Clean Air Act Amendments. These metals will likely be included on Indiana's Air Toxic list soon to be promulgated.

Example Notation: 1.00E-03 = 0.00100

Note: The projected annual emission rate of each metal was calculated using the average hourly emission rate and assuming 8760 hrs/yr of cupola operation.

The total projected emission rate of the nine metals included on the federal air toxics list is: 9.52 tons/yr

titanium for run 2), the analytical detection limit was used to compute a "worst case" mass emission rate. These mass emission rates are prefaced with a "<" symbol to indicate that the true emission rate is less than the value given in Table 5. This treatment of non-detectable analytical results and data which would have resulted in negative mass emission rates (blank greater than sample) was done to obtain worst case comparisons to air toxics regulations.

The metals in Table 5 which have a "*" symbol associated with them are the metals which appear on the federal air toxics list recently promulgated under the new (Nov. '90) Clean Air Act Amendments. These metals will most likely appear on Indiana's future air toxic list, soon to be promulgated. Reference to Table 5 indicates that nine of the eighteen metals quantified in the cupola scrubber exhaust are on the federal air toxics list. The collective projected annual emission rate of the nine metals which appear on the federal air toxics list is 9.52 tons/yr. Of the nine metals, manganese contributed 5.34 tons/yr, followed by lead at 2.60 tons/yr and cadmium at 1.49 tons/yr. Together, these three metals accounted for 9.43 tons/yr (99%) of the projected annual emission rate of the nine regulated metals found in the cupola scrubber exhaust.

A more detailed comparison of the toxic metal emission rates from the cupola to the federal air toxics regulation and the future Indiana air toxics regulation will be made in an upcoming report. This is necessary because air toxic data from other sources at Auburn Foundry will have to be incorporated with the

cupola data in order to make plant-wide comparisons to the applicable air toxics regulations.

Acid Gas Emissions

Table 6 summarizes the hourly and projected annual mass emission rates of the five acid gases quantified in the cupola scrubber exhaust gas during the two stack tests performed May 29, 1991. As was the case with the toxic metals, the average hourly emission rate of each acid gas was multiplied by 8760 hrs/yr to calculate the projected annual emission rate of each acid gas. By assuming 8760 hrs/yr (continuous operation of the cupola), the "worst case" annual emission rates were determined.

Note that for the acid gases which were either non-detectable or which had a higher concentration of acid in the blank than in the sample, the analytical detection limit was used to compute a "worst case" mass emission rate. These mass emission rates are prefaced with a "<" symbol to indicate that the true emission rate is less than the value given in Table 6. This treatment of non-detectable analytical results and data which would have resulted in negative mass emission rates (blank greater than sample) was done to obtain worst case comparisons to air toxics regulations.

The acid gases (HF and HCl) in Table 6 which have a "*" symbol associated with them are the acid gases which appear on the federal air toxics list recently promulgated under the new Clean Air Act Amendments. These two acid gases will most likely appear on Indiana's future air toxic list, soon to be

IN-21
160

Table 6: Hourly and Projected Annual Mass Emission Rates of Five Acid Gases Quantified in the Cupola Scrubber Exhaust Gas; 5/29/91

Acid Gas	Hourly Mass Emission Rate (lb/hr)			Projected Annual Mass Emission Rate
	Run 1	Run 2	Average	(tons/yr)
Hydrogen Fluoride *	1.31E-01	<1.86E-02	7.48E-02	3.28E-01
Hydrogen Chloride *	1.10E-01	<2.53E-02	6.77E-02	2.96E-01
Nitric Acid	<9.07E-04	5.21E-02	2.65E-02	1.16E-01
Phosphoric Acid	3.84E-01	2.73E-01	3.29E-01	1.44E+00
Sulfuric Acid	3.90E-01	7.72E-01	5.81E-01	2.54E+00

"<" indicates that the sample was non-detectable for the acid or that the blank was greater than the sample. For these acid gases a "worst case" emission rate was calculated using the analytical detection limit, refer to Appendix 8.

* Denotes acid gas included on the air toxics list recently promulgated under the federal Clean Air Act Amendments. These acid gases will likely be included on Indiana's Air Toxics list soon to be promulgated.

Example Notation: 1.00E-03 = 0.00100

Note: The projected annual emission rate of each acid gas was calculated using the average hourly emission rate and assuming 8760 hrs/yr of cupola operation.

The total projected emission rate of the two acid gases included on the federal air toxics list is: 0.62 tons/yr

promulgated. The other three acid gases do not appear on the federal air toxics list; however, it is possible that Indiana may regulate them in the future.

Reference to Table 6 indicates that the projected annual emissions of HF and HCl from the cupola scrubber stack were 0.328 and 0.296 tons/yr respectively. The combined projected annual emission rate of HF and HCl (0.624 tons/yr) represents 13.2% of the total projected annual emission rate of all five acid gases (4.72 tons/yr). Additional comparisons of the acid gas data for the cupola scrubber stack to applicable air toxics regulations will be made in a future report.