IN-72
97

R. B. Jacko & Associates

Environmental Consulting Engineers
Air Quality Management

2530 Shagbark Road
West Lafayette, IN 47906
Phone (317) 743-1320

Particulate Compliance Emission Test on the Gray Iron Cupola Scrubber Stack at the

Auburn Foundry, Inc.
635 West 11th Street
Auburn, Indiana

By

R. Scott Flack

and

Robert B. Jacko, P.E., Ph.D.

Test Date: 4/18/96

FN-72-
98

Executive Summary

On April 18, 1996, a series of three EPA method 1-5 and 9 compliance particulate emission tests were performed on the cupola scrubber stack at the Auburn Foundry in Auburn, Indiana. The following table summarizes the particulate concentrations, mass emission rates and the cupola charge rates:

Run No.	Stack Gas Particulate Concentration	Particulate Mass Emission Rate	Cupola Charge Rate
	grains/dscf	lb/hr	tons/hr
1	0.0667	12.03	42.85
2	0.0643	12.86	40.50
3	0.0623	12.06	37.37
---	---	---	---
Average	0.0644	12.32	40.24

Note: dscf = dry standard cubic feet @ 68F, 29.92 in-Hg.

The three test average particulate emission rate of 12.32 lb/hr is only 28.9% of the allowable particulate emission limit of 42.58 lb/hr based on 326 IAC 6-3-2.

IN-12
99

Introduction

On April 18, 1996, three consecutive series of U.S. EPA methods 1-5 and 9 compliance emission tests for particulates and plume opacity were performed on the cupola scrubber stack at the Auburn Foundry in Auburn, Indiana. These tests were performed in order to demonstrate compliance with the particulate mass emission limit specified in 326 IAC 6-3-2 when the charging rate of the cupola is increased from 30 tons/hr to approximately 40 tons/hr.

Mr. R. Scott Flack and Mr. Timothy LaBreche of R.B. Jacko & Associates performed the stack tests on the cupola scrubber stack. Mr. Ouattara Fatogoma, a certified opacity reader, performed the plume opacity readings. Mr. Joseph VanCamp, Environmental Engineer at Auburn Foundry, was responsible for coordinating the sampling with production personnel and collecting the process data. Ms. Ann McIver, a test observer with the Office of Air Management at the Indiana Department of Environmental Management (IDEM), witnessed the stack tests.

Objectives

The purpose of these stack tests was to quantify the atmospheric particulate mass emission rate from the cupola scrubber stack.

Facility Description

The cupola at Auburn Foundry is a 76", water cooled cupola

IN72
100

constructed by Modern Manufacturing Co. In the past the cupola was operated at a maximum permitted capacity of 30 tons-charge/hr. Auburn Foundry is petitioning IDEM to re-permit the operation of the cupola at a level near 40 tons-charge/hr, provided that the cupola scrubber can maintain the particulate emissions below the limit set forth in 326 IAC 6-3-2.

The cupola particulate emissions are controlled by a Schneible high energy venturi wet scrubber which operates at approximately 60 inches of water pressure drop. The clean exhaust gases exit the scrubber and are discharged to the atmosphere via a 136' steel stack. Figure 1 depicts the cupola scrubber stack and the location of the sampling ports.

Table 1 contains the cupola charging rates and the scrubber pressure drop for each of the three stack test periods. Appendix 1 contains the raw process data for the cupola along with additional scrubber operating parameters.

Table 1 Cupola Charging Rates and Scrubber Pressure Drops Recorded During the Stack Tests on 4/18/96

Run No.	Production Record Period	Cupola Charge Rate (tons/hr)	Scrubber Pressure Drop (in-water)
1	7:41 to 8:55 am	42.85	61.8
2	10:36 to 11:44 am	40.50	61.8
3	13:13 to 14:28	37.37	61.5
Avg.		40.24	61.7

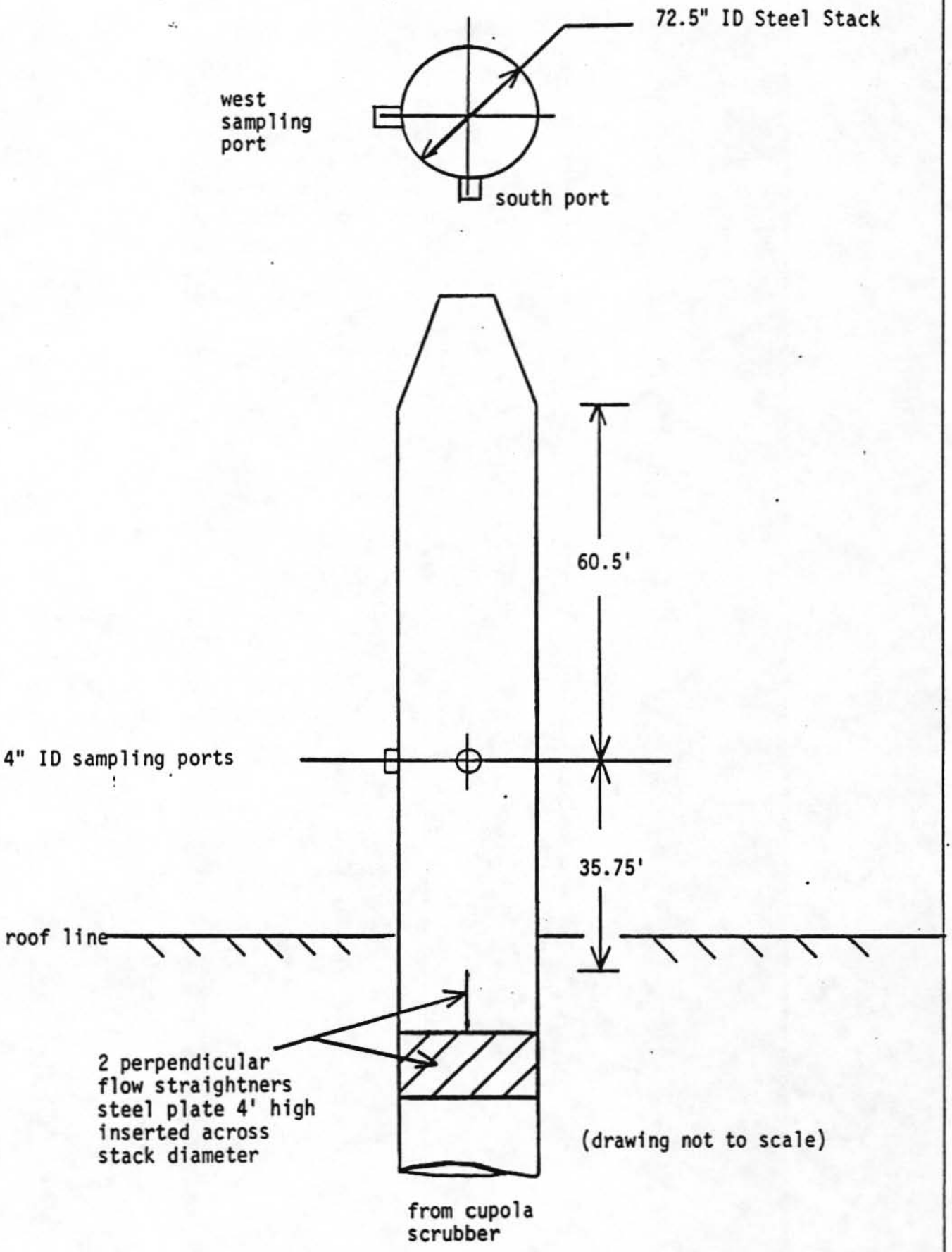

Figure 1: Elevation View of Auburn Foundry Cupola Scrubber Stack

IN-12
102

Sampling Methodology

The particulate mass emission rate tests (EPA methods 1-5) and the opacity observations (EPA method 9) were in accordance with those outlined in the Federal Register, Vol 36, number 247 of December 23, 1971 entitled: "Environmental Protection Agency - Standards of Performance for New Stationary Sources" and revisions published in the August 18, 1977 Federal Register, part II as well as others to date. Figure 2 contains the EPA method 5 sampling train used to extract the particulate samples.

The method 5 train was assembled as follows. A 6'long, glass lined and heat traced probe (S/N G5001) was used with a stainless steel 0.3673" inside diameter (S/N S105) sampling nozzle, co-located "S" type pitot tube and stack temperature thermistor. A Dwyer 0-2" H_2O liquid-filled inclined manometer was used in conjunction with the pitot tube to measure the stack gas velocity pressure and static pressure. A Bacharach Fyrite kit was used to measure the oxygen and carbon dioxide content of the stack gas. Refer to Appendix 2 for the sampling nozzle inside diameter measurements, "S" type pitot calibration data, stack thermistor calibration and the pre and post test dry gas meter (S/N CC102) and orifice meter calibration data.

A 5" diameter Whatman glass fiber filter (type 934-AH) was used in the front half of the sampling train. The first two 500 ml glass impingers each contained 100 ml of distilled water, the third was empty and the fourth contained 200 grams of silica gel.

Figure 1 shows the sampling plane location and sampling

IN-12
103

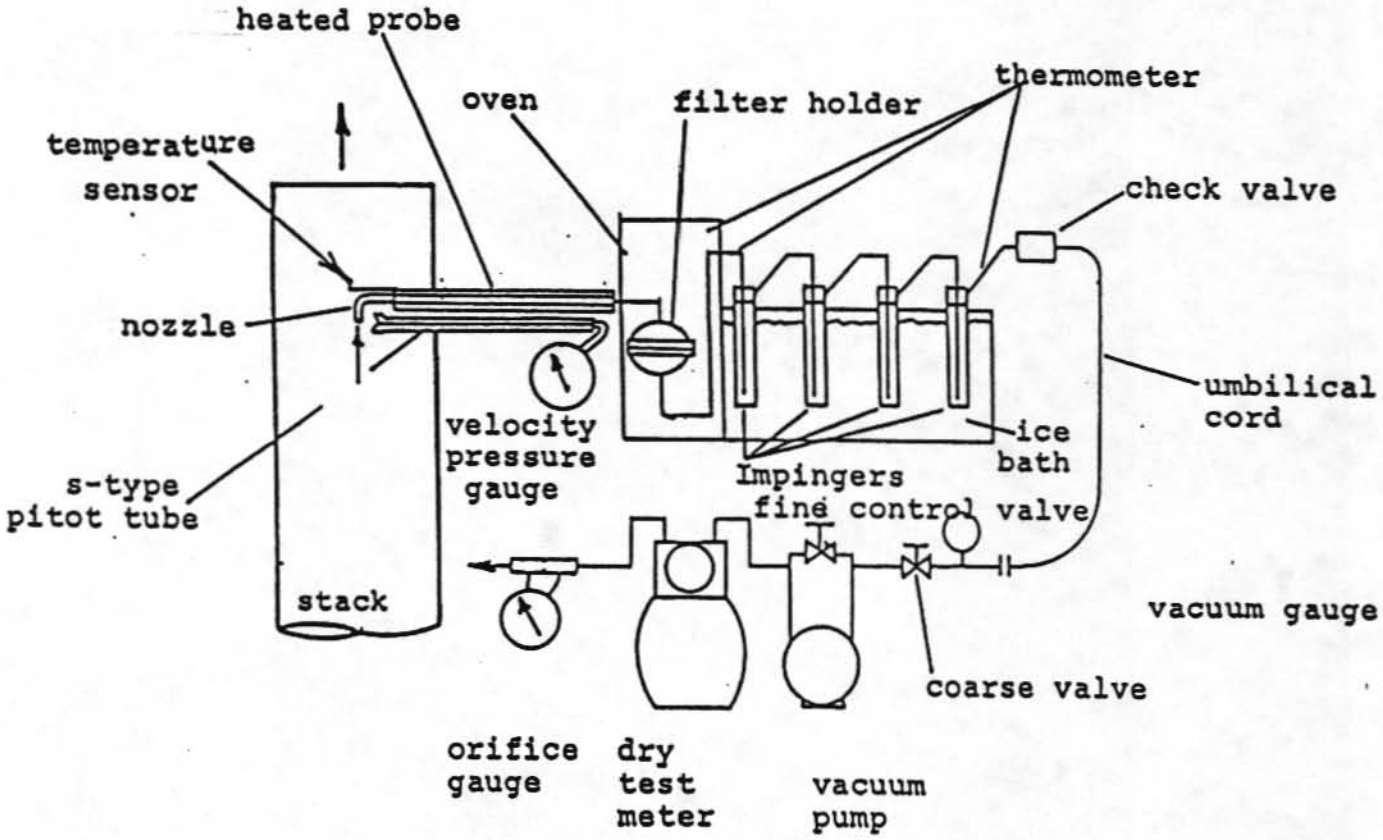

Figure 2 : EPA Method 5 Sampling Train for Particulates

ports. Per EPA method 1, ten traverse points were selected along each diameter. The distance to each traverse point from the inner stack wall was as follows:

Traverse Point	Distance from Inner Stack Wall (inches)
1	1.9
2	5.9
3	10.6
4	16.4
5	24.8
6	47.7
7	56.1
8	61.9
9	66.6
10	70.6

Per EPA method 5, isokinetic gas samples were collected for 60 minutes per test. At the completion of the sampling and leak checks, the probe and nozzle were backwashed on-site using distilled acetone. The backwash samples and 5" filters were analyzed gravimetrically for particulate weight gain using a Mettler M5 analytical balance (SN 19187) in R.B. Jacko & Associates' laboratory. Appendices 3 and 4 contain the method 5 field and laboratory data sheets, respectively.

Mr. Ouattara Fatogoma, a certified opacity reader, observed the cupola scrubber stack plume for 30 minutes per EPA method 9 simultaneously with each method 5 stack test. Appendix 5 contains Mr. Fatogoma's opacity observation data sheets.

Results and Discussion

Sampling and Stack Gas Parameters

Tables 2, 3, and 4 contain selected sampling and stack parameters from each of the three consecutive particulate emission tests. Note that the sample time, gas volume and the isokinetic percentage for each of the tests were well within the EPA requirements for method 5 tests. Required parameters are minimum 60 minute sample time, more than 30 dscf of sample volume and an isokinetic percentage of 100 $\pm$ 10%. Our values were 60 minutes, greater than 32 dscf and a three test average isokinetic percentage of 97.9%.

Reference to Tables 2 through 4 indicates that the cupola scrubber exhaust gas flow rates and temperatures were very stable during the test day. The stack gas volumetric flow rates ranged from 21,060 to 23,340 dscfm with a three test average of 22,324 dscfm. The stack gas temperatures ranged from 157.7 to 165.5 F with a three test average of 161.2 F.

Particulate Stack Gas Concentration and Mass Emission Rate

Table 5 summarizes the particulate concentrations and mass emission rates quantified at the scrubber stack. Appendix 6 contains the supporting computer generated calculations. Reference to Table 5 shows that the stack gas particulate concentrations were 0.0667, 0.0643 and 0.0623 grains/dscf, respectively for runs 1, 2 and 3 with a three test average of

IN-72
10b

Table 2 Selected Stack Gas and Sampling Parameters; Auburn Foundry Cupola Scrubber Stack, Run 1, 4/18/96

****

SAMPLING PARAMETERS
****

Control Case ID	CC102
Sample Case ID	SC103
Probe ID	G5001
CP, Pitot Tube Correction Factor	0.8164
Nozzle Diameter, Inches	0.3673
TM, Avg. Meter Temperature, Rankine	522.70
Sampling Time, Minutes	60.00
VTOT,STD, Sample Vol at Standard Cond., Cu.Ft.	32.58
Stack Cross Sectional Area, Square Feet	28.67
PB, Barometric Pressure, Inches-Hg	29.01
I, Isokinetic Percentage	100.55

STACK PARAMETERS
****

CO2, Carbon Dioxide, Percent	14.00
O2, Oxygen, Percent	8.00
BWO, Moisture Percentage by Volume	27.41
MD, Molecular Weight Dry Basis	30.56
TS, Avg. Gas Temperature, Rankine	617.70
TS, Avg. Gas Temperature, deg. F	157.70
PS, Absolute Static Pressure, Inches-Hg	29.01
VS, Gas Velocity, Ft/Sec	20.35
QS,STD, Vol. Flow Rate, Standard Conditions, dscfm	21060

IN-12
107

Table 3 Selected Stack Gas and Sampling Parameters; Auburn Foundry Cupola Scrubber Stack, Run 2, 4/18/96

****

SAMPLING PARAMETERS
****

Control Case ID	CC102
Sample Case ID	SC107
Probe ID	G5001
CP, Pitot Tube Correction Factor	0.8164
Nozzle Diameter, Inches	0.3673
TM, Avg. Meter Temperature, Rankine	539.15
Sampling Time, Minutes	60.00
VTOT,STD, Sample Vol at Standard Cond., Cu.Ft.	35.72
Stack Cross Sectional Area, Square Feet	28.67
PB, Barometric Pressure, Inches-Hg	29.01
I, Isokinetic Percentage	99.47

STACK PARAMETERS
****

CO2, Carbon Dioxide, Percent	13.00
O2, Oxygen, Percent	8.00
BWO, Moisture Percentage by Volume	26.54
MD, Molecular Weight Dry Basis	30.40
TS, Avg. Gas Temperature, Rankine	620.45
TS, Avg. Gas Temperature, deg. F.	160.45
PS, Absolute Static Pressure, Inches-Hg	29.01
VS, Gas Velocity, Ft/Sec	22.38
QS,STD, Vol. Flow Rate, Standard Conditions, dscfm	23340

IN-12
108

Table 4 Selected Stack Gas and Sampling Parameters; Auburn Foundry Cupola Scrubber Stack, Run 3, 4/18/96

****

SAMPLING PARAMETERS
****

Control Case ID	CC102
Sample Case ID	SC106
Probe ID	G5001
CP, Pitot Tube Correction Factor	0.8164
Nozzle Diameter, Inches	0.3673
TM, Avg. Meter Temperature, Rankine	544.38
Sampling Time, Minutes	60.00
VTOT,STD, Sample Vol at Standard Cond., Cu.Ft.	32.57
Stack Cross Sectional Area, Square Feet	28.67
PB, Barometric Pressure, Inches-Hg	29.01
I, Isokinetic Percentage	93.78

STACK PARAMETERS
****

CO2, Carbon Dioxide, Percent	12.50
O2, Oxygen, Percent	8.50
BWO, Moisture Percentage by Volume	26.40
MD, Molecular Weight Dry Basis	30.34
TS, Avg. Gas Temperature, Rankine	625.45
TS, Avg. Gas Temperature, deg. F.	165.45
PS, Absolute Static Pressure, Inches-Hg	29.02
VS, Gas Velocity, Ft/Sec	21.77
QS,STD, Vol. Flow Rate, Standard Conditions, dscfm	22571

IN-72
109

Table 5 Particulate Concentration and Mass Emission Rate at the Cupola Scrubber Stack, 4/18/96

Run No.	Stack Gas Particulate Concentration grains/dscf	Particulate Mass Emission Rate lb/hr
1	0.0667	12.03
2	0.0643	12.86
3	0.0623	12.06
Average	0.0644	12.32

Note: dscf = dry standard cubic feet @ 68F, 29.92 in-Hg.

0.0644 grains/dscf. The particulate mass emission rates were 12.03, 12.86 and 12.06 lb/hr with a three test average of 12.32 lb/hr. The average particulate emission rate of 12.32 lb/hr is only 28.9% of the allowable particulate emission limit of 42.58 lb/hr based on 326 IAC 6-3-2 and an average cupola charging rate of 40.24 tons/hr. This particulate emission rate limit is calculated using the following equation:

$$E = 55.0\ P^{0.11} - 40$$

where:

E = allowable particulate emission rate, lbs/hr (42.58)

P = cupola charging rate, tons/hr (40.24)

Plume Opacity

Appendix 5 contains the 30 minute duration opacity observations taken simultaneously during the particulate mass emission rate measurements. Note that all of the visible emissions observations were at the 5% level during all three 30 minute observation periods. These opacity observations are well below the 20% opacity limit that Auburn Foundry believes applies to the cupola scrubber stack, even though the limit is not explicitly stated in the current operating permit for the cupola.