Note: This is a reference cited in *AP 42, Compilation of Air Pollutant Emission Factors, Volume I Stationary Point and Area Sources.* AP42 is located on the EPA web site at www.epa.gov/ttn/chief/ap42/

The file name refers to the reference number, the AP42 chapter and section. The file name "ref02_c01s02.pdf" would mean the reference is from AP42 chapter 1 section 2. The reference may be from a previous version of the section and no longer cited. The primary source should always be checked.

RESEARCH TRIANGLE INSTITUTE

DRAFT COPY

RTI/1434/04-01S
November 1978

AP-42
5th ed.
Section 12.4
#7

ENVIRONMENTAL IMPACT OF FERROALLOY PRODUCTION
INTERIM REPORT—ASSESSMENT OF CURRENT DATA

by

C. W. Westbrook and D. P. Daugherty
Research Triangle Institute
Research Triangle Park, N.C. 27709

Contract No. 68-02-2630
RTI No. 41U-1434-4

Project Officer

L. G. Twidwell
Industrial Environmental Research Laboratory
Office of Energy, Minerals, and Industry
U.S. Environmental Protection Agency
Research Triangle Park, N.C. 27711

Prepared for
U.S. Environmental Protection Agency
Office of Research and Development
Washington, D.C. 20460

DISCLAIMER

This report has been reviewed by the Industrial Environmental Research Laboratory, U.S. Environmental Protection Agency, and approved for publication. Approval does not signify that the contents necessarily reflect the views and policies of the U.S. Environmental Protection Agency, nor does mention of trade names or commercial products constitute endorsement or recommendation for use.

DRAFT COPY

ACKNOWLEDGMENTS

This report presents information obtained in the first phase of a study being conducted by the Research Triangle Institute (RTI) for the Industrial Environmental Research Laboratory of the Environmental Protection Agency (EPA) under contract 68-02-2630. The EPA Project Officer is Dr. Larry G. Twidwell.

The project is being carried out in RTI's Energy and Environmental Research Division under the general direction of Dr. J. J. Wortman. The work is being done by members of the Process Engineering Department's Industrial Process Studies Section, Dr. Forest O. Mixon, Jr., Department Manager, Mr. Ben H. Carpenter, Section Head.

ABSTRACT

This report contains pertinent information gathered during the initial phase of an assessment of the ferroalloy industry. The report contains data on the status of the industry and changes during the decade, published survey and testing data used in developing environmental regulation, data on polycyclic organic materials produced in ferroalloy manufacture, emission data and other compliance information available from EPA Regional Offices, and environmental regulations and guidelines for the industry. Information is included for submerged arc production of calcium carbide and the electrolytic and the smelting and slag handling segments of the industry. Conclusions as to the adequacy of the information and suggestions for further research are made.

The information will be continually updated as the project continues. Some of the presented information may become outdated as a result of dicussions with industry representatives, plant visits, and testing at selected ferroalloy production facilities.

CONTENTS

		Page
Acknowledgments		iii
Abstract		iv
1.0	Summary and Conclusions	1
2.0	Introduction	3
3.0	Regulations	4
	3.1 General Provisions	5
	3.2 Air	14
	3.3 Water	18
	3.4 Land Disposal of Solid Wastes	24
4.0	Status of the Ferroalloy Industry	32
5.0	Published Information	53
	5.1 Submerged ARC Ferroalloy Production	53
	5.2 Calcium Carbide Manufacture	234
	5.3 Electrolytic Processes	248
	5.4 Information Relating To Polynuclear Aromatic Organic Emissions	261
6.0	Information Obtained From EPA Regional Files	294

1.0 CONCLUSIONS AND RECOMMENDATIONS

Data collected at this point in the project are sufficient to make several general conclusions and identify the major data gaps. A review of the data of Section 5.0 shows that detailed information is available for particulate mass emission rates from the furnaces, size distribution of particulates, and inorganic materials in these particulates. The corresponding data from EPA compliance files and discussions with industry representatives confirm that all segments of the industry are in the process of or have installed air pollution control equipment. The equipment being installed is almost exclusively baghouse filtration since this is the technique most applicable to the varying dust types and high gas volumes from the different products manufactured.

Detailed regulations have been developed for water discharges from the industry. These regulations restrict the discharge of typical parameters of general concern such as suspended solids, pH, thermal load, cyanide, and ammonia. Few segments of the industry are having any difficulty meeting the discharge regulations. In most cases, simple clarification and pH adjustment is sufficient. In a few cases chlorination is required for cyanide control. With the increasing use of baghouses for air pollution control, the number of facilities having process wastewater discharges is decreasing.

The industry typically has large storage piles of raw materials and waste materials (slags, flue dust, etc.) on site. The piles are generally not covered and little, if any, steps are taken to ensure that no leakage percolates to the underground aquifers. Waste storage areas, in some cases, are located near streams and rivers and could pose a threat during periods of heavy rain. At least one case is known where waste leaching or percolating has forced temporary shutdowns of public water treating facilities (Foote Mineral Co., New Johnsonville, Tennessee).

Data on organic emissions from the industry are extremely limited and of uncertain validity. The data suggest that organic material in general, and polycyclic organic material in particular, is emitted in small quantities from

open furnaces. Significantly larger amounts were emitted from sealed and mix-sealed furnaces (samples taken before the gas was flared or otherwise burned). Unfortunately, very few furnaces and product lines were sampled. In addition, the fluorescence analytical technique used for most samples is not necessarily indicative of the content of carcinogenic polycyclic organic compounds.

The data analyzed at this point in the project indicate that, for a Level 1 assessment, there is sufficient data on the quantities of particulate emissions, the size distribution of the particulates, and the inorganic composition of the particulate matter. Also, sufficient data exist on suspended solids, cyanide, and pH of aqueous discharges.

Insufficient data exist in the following areas: quantities of raw materials stored in the open and leachate quality; fugitive emissions from raw material handling; organic emissions, particularly polycyclic organic compounds, from furnace operations; composition of sludges and slags going to waste disposal (especially landfills) and particularly the organic content and composition; composition of scrubber effluents, especially with respect to organics, and polycyclic organics in particular.

To fill these data gaps, the following actions are recommended:

1. The industry should be surveyed to determine the amounts and types of material stored in the open or in landfills.
2. Dusts and sludges from emission control devices from a wide variety of furnace types and product lines should be analyzed for inorganic and organic content with emphasis on polycyclic organic material.
3. Aqueous effluent from scrubbers and runoff from storage piles should be analyzed for inorganic and organic content.
4. Complete characterization of furnace emissions from SiMn, 50-75 percent FeSi, Si metal, and CaC_2 production for open and mix-sealed furnaces, where appropriate, utilizing the Source Assessment Sampling System and Level 1 analytical methodology.
5. Tailing ponds from electrolytic operations should be analyzed especially for inorganics and evaluated for possible contamination of aquifers by runoff or percolation.

2.0 INTRODUCTION

This report contains information on available data for the U.S. ferroalloy industry obtained thus far in the performance of this contract. The purpose of the report is to show what information suitable for a multimedia environmental assessment is available and to identify the major data gaps. This information will be used to determine what further efforts are required to provide a good assessment of the environmental impact of the industry.

In preparing the report, it became clear that much information is published, especially by EPA sources. The information is, however, available through many different publications. Therefore, an attempt has been made to bring the most pertinent information together into a single document rather than merely providing references to the data.

Section 3.0 of the report contains the Federal regulations for discharges to air and water and guidelines for disposal of solid waste. Pertinent information on the production of ferroalloys is presented in Section 4.0. This information is not as complete as desired and will be supplemented as the project progresses. Section 5.0 gives detailed information, from published sources, on ferroalloy emissions. Section 6.0 contains information on particular producers which was in EPA regional offices.

3.0 REGULATIONS

Ferroalloy manufacturers must comply with regulations controlling pollutant discharges to air, water (surface discharge), and land (subsurface water contamination by leaching). The EPA regulations below form the nucleus of these controls. In some cases, state regulations are more stringent than those of EPA.

These regulations were developed based on extensive testing by EPA. The information used for these regulations is published in:

1. "Engineering and Cost Study of the Ferroalloy Industry," EPA-450/2-74-008, May 1974.
2. "Background Information for Standards of Performance: Electric Submerged Arc Furnaces for Production of Ferroalloys"
   Volume 1: Proposed Standards, EPA 450/2-74-018a, October 1974.
   Volume 2: Test Data Summary, EPA 450/2-74-018b, October 1974.
   Volume 3: Supplemental Information, EPA 450/2-74-018c, April 1976.
3. "Development Document for Interim Final Effluent Limitations Guidelines and Proposed New Source Performance Standards for the Electrolytic Ferroalloys Segment of the Ferroalloy Manufacturing Point Source Category," EPA 440/1-75-038a, February 1975.
4. "Development Document for Interim Final Effluent Limitations Guidelines and Proposed New Source Performance Standards for the Calcium Carbide Segment of the Ferroalloy Manufacturing Point Source Category," EPA 440/1-75-038, February 1975.
5. "Development Document for Effluent Limitations Guidelines and New Source Performance Standards for the Smelting and Slag Processing Segments of the Ferroalloy Manufacturing Point Source Category," EPA 440/1-74-008a, February 1974.

Some data from these reports as well as other sources are included in other Chapters of this report.

Subpart A—General Provisions

§ 60.1 Applicability.

Except as provided in Subparts B and C, the provisions of this part apply to the owner or operator of any stationary source which contains an affected facility, the construction or modification of which is commenced after the date of publication in this part of any standard (or, if earlier, the date of publication of any proposed standard) applicable to that facility.

§ 60.2 Definitions.

As used in this part, all terms not defined herein shall have the meaning given them in the Act:

(a) "Act" means the Clean Air Act (42 U.S.C. 1857 et seq., as amended by Public Law 91-604, 84 Stat. 1676).

(b) "Administrator" means the Administrator of the Environmental Protection Agency or his authorized representative.

(c) "Standard" means a standard of performance proposed or promulgated under this part.

(d) "Stationary source" means any building, structure, facility, or installation which emits or may emit any air pollutant and which contains any one or combination of the following:

(1) Affected facilities.

(2) Existing facilities.

(3) Facilities of the type for which no standards have been promulgated in this part.

[40 FR 58415, December 16, 1975]

(e) "Affected facility" means, with reference to a stationary source, any apparatus to which a standard is applicable.

(f) "Owner or operator" means any person who owns, leases, operates, controls, or supervises an affected facility or a stationary source of which an affected facility is a part.

(g) "Construction" means fabrication, erection, or installation of an affected facility.

(h) "Modification" means any physical change in, or change in the method of operation of, an existing facility which increases the amount of any air pollutant (to which a standard applies) emitted into the atmosphere by that facility or which results in the emission of any air pollutant (to which a standard applies) into the atmosphere not previously emitted.

[40 FR 58415, December 16, 1975]

(i) "Commenced" means, with respect to the definition of "new source" in section 111(a)(2) of the Act, that an owner or operator has undertaken a continuous program of construction or modification or that an owner or operator has entered into a contractual obligation to undertake and complete, within a reasonable time, a continuous program of construction or modification.

(j) "Opacity" means the degree to which emissions reduce the transmission of light and obscure the view of an object in the background.

(k) "Nitrogen oxides" means all oxides of nitrogen except nitrous oxide, as measured by test methods set forth in this part.

(l) "Standard conditions" means temperature of 20°C (68°F) and a pressure of 760 mm of Hg (29.92 in. of Hg).

(m) "Proportional sampling" means sampling at a rate that produces a constant ratio of sampling rate to stack gas flow rate.

(n) "Isokinetic sampling" means sampling in which the linear velocity of the gas entering the sampling nozzle is equal to that of the undisturbed gas stream at the sample point.

(o) "Startup" means the setting in operation of an affected facility for any purpose.

(p) "Shutdown" means the cessation of operation of an affected facility for any purpose.

(q) "Malfunction" means any sudden and unavoidable failure of air pollution control equipment or process equipment or of a process to operate in a normal or usual manner. Failures that are caused entirely or in part by poor maintenance, careless operation, or any other preventable upset condition or preventable equipment breakdown shall not be considered malfunctions.

(r) "One-hour period" means any 60 minute period commencing on the hour.

[40 FR 46250, October 6, 1975]

(s) "Reference method" means any method of sampling and analyzing for an air pollutant as described in Appendix A to this part.

[39 FR 20790, June 14, 1974]

(t) "Equivalent method" means any method of sampling and analyzing for an air pollutant which have been demonstrated to the Administrator's satisfaction to have a consistent and quantitatively known relationship to the reference method, under specified conditions.

(u) "Alternative method" means any method of sampling and analyzing for an air pollutant which is not a reference or equivalent method but which has been demonstrated to the Administrator's satisfaction to, in specific cases, produce results adequate for his determination of compliance.

(v) "Particulate matter" means any finely divided solid or liquid material, other than uncombined water, as measured by Method 5 of Appendix A to this part or an equivalent or alternative method

(w) "Run" means the net period of time during which an emission sample is collected. Unless otherwise specified, a run may be either intermittent or continuous within the limits of good engineering practice.

(x) "Six-minute period" means any one of the 10 equal parts of a one-hour period.

(y) "Continuous monitoring system" means the total equipment, required under the emission monitoring sections in applicable subparts, used to sample and condition (if applicable), to analyze, and to provide a permanent record of emissions or process parameters.

(z) "Monitoring device" means the total equipment, required under the monitoring of operations sections in applicable subparts, used to measure and record (if applicable) process parameters.

[40 FR 46250, October 6, 1975]

Reproduced by special permission from the *Environmental Reporter* copyright ©1977 by The Bureau of National Affairs, Washington, D.C.

(aa) "Existing facility" means, with reference to a stationary source, any apparatus of the type for which a standard is promulgated in this part, and the construction or modification of which was commenced before the date of proposal of that standard; or any apparatus which could be altered in such a way as to be of that type.

(bb) "Capital expenditure" means an expenditure for a physical or operational change to an existing facility which exceeds the product of the applicable "annual asset guideline repair allowance percentage" specified in the latest edition of Internal Revenue Service Publication 534 and the existing facility's basis, as defined by section 1012 of the Internal Revenue Code.

[40 FR 58415, December 16, 1975]

§ 60.3 Units and abbreviations.

[42 FR 37000, July 19, 1977]

Used in this part are abbreviations and symbols of units of measure. These are defined as follows:

(a) System International (SI) units of measure:

A—ampere
g—gram
Hz—hertz
J—joule
K—degree Kelvin
kg—kilogram
m—meter
m^3—cubic meter
mg—milligram—10^{-3} gram
mm—millimeter—10^{-3} meter
Mg—megagram—10^6 gram
mol—mole
N—newton
ng—nanogram—10^{-9} gram
nm—nanometer—10^{-9} meter
Pa—pascal
s—second
V—volt
W—watt
Ω—ohm
μg—microgram—10^{-6} gram

(b) Other units of measure:

Btu—British thermal unit
°C—degree Celsius (centigrade)
cal—calorie
cfm—cubic feet per minute
cu ft—cubic feet
dcf—dry cubic feet
dcm—dry cubic meter
dscf—dry cubic feet at standard conditions
dscm—dry cubic meter at standard conditions
eq—equivalent
°F—degree Fahrenheit
ft—feet
gal—gallon
gr—grain
g-eq—gram equivalent
hr—hour
in—inch
k—1,000
l—liter
lpm—liter per minute
lb—pound
meq—milliequivalent
min—minute
ml—milliliter
mol. wt.—molecular weight
ppb—parts per billion
ppm—parts per million
psia—pounds per square inch absolute
psig—pounds per square inch gage
°R—degree Rankine
scf—cubic feet at standard conditions
scfh—cubic feet per hour at standard conditions
scm—cubic meter at standard conditions
sec—second
sq ft—square feet
std—at standard conditions

(c) Chemical nomenclature:

CdS—cadmium sulfide
CO—carbon monoxide
CO_2—carbon dioxide
HCl—hydrochloric acid
Hg—mercury
H_2O—water
H_2S—hydrogen sulfide
H_2SO_4—sulfuric acid
N_2—nitrogen
NO—nitric oxide
NO_2—nitrogen dioxide
NO_x—nitrogen oxides
O_2—oxygen
SO_2—sulfur dioxide
SO_3—sulfur trioxide
SO_x—sulfur oxides

(d) Miscellaneous:

A.S.T.M.—American Society for Testing and Materials

§ 60.4 Address.

(a) All requests, reports, applications, submittals, and other communications to the Administrator pursuant to this part shall be submitted in duplicate and addressed to the appropriate Regional Office of the Environmental Protection Agency, to the attention of the Director, Enforcement Division. The regional offices are as follows:

Region I (Connecticut, Maine, New Hampshire, Massachusetts, Rhode Island, Vermont), John F. Kennedy Federal Building, Boston, Massachusetts 02203.

Region II (New York, New Jersey, Puerto Rico, Virgin Islands), Federal Office Building, 26 Federal Plaza (Foley Square), New York, N.Y. 10007.

Region III (Delaware, District of Columbia, Pennsylvania, Maryland, Virginia, West Virginia), Curtis Building, Sixth and Walnut Streets, Philadelphia, Pennsylvania 19106.

Region IV (Alabama, Florida, Georgia, Mississippi, Kentucky, North Carolina, South Carolina, Tennessee), Suite 300, 1421 Peachtree Street, Atlanta, Georgia 30309.

Region V (Illinois, Indiana, Minnesota, Michigan, Ohio, Wisconsin), 230 South Dearborn Street, Chicago, Illinois 60604.

Region VI (Arkansas, Louisiana, New Mexico, Oklahoma, Texas), 1600 Patterson Street, Dallas, Texas 75201.

Region VII (Iowa, Kansas, Missouri, Nebraska), 1735 Baltimore Street, Kansas City, Missouri 63108.

Region VIII (Colorado, Montana, North Dakota, South Dakota, Utah, Wyoming), 196 Lincoln Towers, 1860 Lincoln Street, Denver, Colorado 80203.

Region IX (Arizona, California, Hawaii, Nevada, Guam, American Samoa), 100 California Street, San Francisco, California 94111.

Region X (Washington, Oregon, Idaho, Alaska), 1200 Sixth Avenue, Seattle, Washington 98101.

(b) Section 111(c) directs the Administrator to delegate to each State, when appropriate, the authority to implement and enforce standards of performance for new stationary sources located in such State. All information required to be submitted to EPA under paragraph (a) of this section, must also be submitted to the appropriate State Agency of any State to which this authority has been delegated (provided, that each specific delegation may except sources from a certain Federal or State reporting requirement). The appropriate mailing address for those States whose delegation request has been approved is as follows:

(A) [reserved].

(B) State of Alabama, Air Pollution Control Division, Air Pollution Control Commission, 645 S. McDonough Street, Montgomery, Alabama 36104.

[41 FR 40467, September 20, 1976]

(C) [reserved].

D—Arizona

Pima County Air Pollution Control District, 151 West Congress Street, Tucson, AZ 85701.

[41 FR 53017, December 3, 1976]

(E) [reserved].

F—California:

Bay Area Air Pollution Control District, 939 Ellis Street, San Francisco, CA 94109.

Del Norte County Air Pollution Control District, Courthouse, Crescent City, CA 95531.

Fresno County Air Pollution Control District, 515 S. Cedar Avenue, Fresno, CA 93702.

Humboldt County Air Pollution Control District, 5600 S. Broadway, Eureka, CA 95501.

Kern County Air Pollution Control District, 1700 Flower Street (P.O. Box 997), Bakersfield, CA 93302.

Madera County Air Pollution Control District, 135 W. Yosemite Avenue, Madera, CA 93637.

Mendocino County Air Pollution Control District, County Courthouse, Ukiah, CA 95482.

Monterey Bay Unified Air Pollution Control District, 420 Church Street (P.O. Box 487) Salinas, CA 93901.

Northern Sonoma County Air Pollution Control District, 3313 Chanate Road, Santa Rosa, CA 95404.

Sacramento County Air Pollution Control District, 3701 Branch Center Road, Sacramento, CA 95827.

San Diego County Air Pollution Control District, 9150 Chesapeake Drive, San Diego, CA 92123.

San Joaquin County Air Pollution Control District, 1601 E. Hazelton Street (P.O. Box 2009) Stockton, CA 95201.

Santa Barbara County Air Pollution Control District, 4440 Calle Real, Santa Barbara, CA 93110.

Stanislaus County Air Pollution Control District, 820 Scenic Drive, Modesto, CA 95350.

Trinity County Air Pollution Control District, Box AJ, Weaverville, CA 96093.

Ventura County Air Pollution Control District, 625 E. Santa Clara Street, Ventura, CA 93001.

[41 FR 54757, December 15, 1976]

(G)—State of Colorado, Colorado Air Pollution Control Division, 4210 East 11th Avenue, Denver, Colorado 80220.

[40 FR 50718, October 31, 1975]

(H) State of Connecticut, Department of Environmental Protection, State Office Building, Hartford, Connecticut 06115.

[41 FR 11820, March 22, 1976]

(I) State of Delaware (for fossil fuel-fired steam generators; incinerators; nitric acid plants; asphalt concrete plants; storage vessels for petroleum liquids; and sewage treatment plants only): Delaware Department of Natural Resources and Environmental Control, Edward Tatnall Building, Dover, Del. 19901.

[43 FR 6770, February 16, 1978]

(J)-(K) [reserved].

(L) State of Georgia, Environmental Protection Division, Department of Natural Resources, 270 Washington Street, S.W., Atlanta, Georgia 30334.

[41 FR 24885, June 21, 1976]

(M) [reserved].

(N) State of Idaho, Department of Health and Welfare, Statehouse, Boise, Idaho. 83701. [40 FR 26677, June 25, 1975]

(O) [reserved].

(P) State of Indiana, Indiana Air Pollution Control Board, 1330 West Michigan Street, Indianapolis, Indiana 46206.

[41 FR 43148, September 30, 1976]

(Q) State of Iowa, Department of Environmental Quality, 3920 Delaware, P.O. Box 3326, Des Moines, Iowa 50316.

[41 FR 56806, December 30, 1976]

(R)- [reserved].

(S) Division of Air Pollution Control, Department for Natural Resources and Environmental Protection, U.S. 127, Frankfort, Ky. 40601.

[43 FR 3361, January 25, 1978]

(T) [reserved]

(U) State of Maine, Department of Environmental Protection, State House, Augusta, Maine 04330.

[40 FR 59729, December 30, 1975]

(V) [reserved].

(W) Massachusetts Department of Environmental Quality Engineering, Division of Air Quality Control, 600 Washington Street, Boston, Massachusetts 02111.

[41 FR 19633, May 13, 1976]

(X)—State of Michigan, Air Pollution Control Division, Michigan Department of Natural Resources, Stevens T. Mason Building, 8th Floor, Lansing, Michigan 48926

[41 FR 1913, January 13, 1976]

(Y) Minnesota Pollution Control Agency, Division of Air Quality, 1935 West County Road B-2, Roseville, Minn. 55113.

[43 FR 10, January 3, 1978]

(AA) [reserved].

(BB) State of Montana, Department of Health and Environmental Services, Cogswell Building, Helena, Mont. 59601.

[42 FR 44544, September 6, 1977]

(CC) Nebraska Department of Environmental Control, P.O. Box 94653, State House Station, Lincoln, Nebraska 68509.

[41 FR 56805, December 30, 1976]

(DD) [reserved].

(EE) New Hampshire Air Pollution Control Agency, Department of Health and Welfare, State Laboratory Building, Hazen Drive, Concord, New Hampshire 03301.

[41 FR 19633, May 13, 1976]

(FF)—State of New Jersey: New Jersey Department of Environmental Protection, John Fitch Plaza, P.O. Box 2807, Trenton, New Jersey 08625.

[42 FR 37386, July 21, 1977

(GG) [reserved].

(HH)—New York: New York State Department of Environmental Conservation, 50 Wolf Road, New York 12233, attention: Division of Air Resources.

[40 FR 48347, October 15, 1975]

(II) North Carolina Environmental Management Commission, Department of Natural and Economic Resources, Division of Environmental Management, P.O. Box 27687, Raleigh, North Carolina 27611. Attention: Air Quality Section.

[41 FR 56805, December 30, 1976]

(JJ)—State of North Dakota, State Department of Health, State Capitol, Bismarck, North Dakota 58501.

[41 FR 44859, October 13, 1976]

(KK) Ohio—

Medina, Summit and Portage Counties; Director, Air Pollution Control, 177 South Broadway, Akron, Ohio, 44308.

Stark County; Director, Air Pollution Control Division, Canton City Health Department, City Hall, 218 Cleveland Avenue SW, Canton, Ohio, 44702.

Butler, Clermont, Hamilton and Warren Counties; Superintendent, Division of Air Pollution Control, 2400 Beekman Street, Cincinnati, Ohio, 45214.

Cuyahoga County; Commissioner, Division of Air Pollution Control, Department of Public Health and Welfare, 2735 Broadway Avenue, Cleveland, Ohio, 44115.

Lorain County; Control Officer, Division of Air Pollution Control, 200 West Erie Avenue, 7th Floor, Lorain, Ohio, 44052.

Belmont, Carroll, Columbiana, Harrison, Jefferson, and Monroe Counties; Director, North Ohio Valley Air Authority (NOVAA), 814 Adams Street, Steubenville, Ohio, 43952.

Clark, Darke, Greene, Miami, Montgomery, and Preble Counties; Supervisor, Regional Air Pollution Control Agency (RAPCA), Montgomery County Health Department, 451 West Third Street, Dayton, Ohio, 45402.

Lucas County and the City of Rossford (in Wood County); Director, Toledo Pollution Control Agency, 26 Main Street, Toledo, Ohio 43605.

Adams, Brown, Lawrence, and Scioto Counties; Engineer-Director, Air Division, Portsmouth City Health Department, 740 Second Street, Portsmouth, Ohio, 45662.

Allen, Ashland, Auglaize, Crawford, Defiance, Erie, Fulton, Hancock, Hardin, Henry, Huron, Knox, Marion, Mercer, Morrow, Ottawa, Paulding, Putnam, Richland, Sandusky, Seneca, Van Wert, Williams, Wood (except City of Rossford), and Wyandot Counties; Ohio Environmental Protection Agency, Northwest District Office, 111 West Washington Street, Bowling Green, Ohio, 43402.

Ashtabula, Geauga, Lake, Mahoning, Trumbull, and Wayne Counties; Ohio Environmental Protection Agency, Northeast District Office, 2110 East Aurora Road, Twinsburg, Ohio, 44087.

Athens, Coshocton, Gallia, Guernsey, Highland, Hocking, Holmes, Jackson, Meigs, Morgan, Muskingum, Noble, Perry, Pike, Ross, Tuscarawas, Vinton, and Washington Counties; Ohio Environmental Protection Agency, Southeast District Office, Route 3, Box 603, Logan, Ohio, 43138.

Champaign, Clinton, Logan, and Shelby Counties; Ohio Environmental Protection Agency, Southwest District Office, 7 East Fourth Street, Dayton, Ohio, 45402.

Delaware, Fairfield, Fayette, Franklin, Licking, Madison, Pickaway, and Union Counties; Ohio Environmental Protection Agency, Central District Office, 369 East Broad Street, Columbus, Ohio, 43215.

[41 FR 55531, December 21, 1976]

(LL) [reserved].

(MM)—State of Oregon, Department of Environmental Quality, 1234 SW Morrison Street, Portland, Oregon 97205.

[41 FR 7750, February 20, 1976]

(NN) (a) City of Philadelphia: Philadelphia Department of Public Health, Air Management Services, 801 Arch Street, Philadelphia, Pennsylvania 19107.

[42 FR 6812, February 4, 1977]

(OO) [reserved].

(PP) State of South Carolina, Office of Environmental Quality Control, Department of Health and Environmental Control, 2600 Bull Street, Columbia, South Carolina 29201.

[42 FR 4124, January 24, 1977]

(QQ) State of South Dakota, Department of Environmental Protection, Joe Foss Building, Pierre, South Dakota 57501.

[41 FR 17549, April 27, 1976]

(RR), (SS) [reserved].

(TT)—State of Utah, Utah Air Conservation Committee, State Division of

Health, 44 Medical Drive, Salt Lake City, Utah 84113.

[41 FR 24124, June 15, 1976]

(UU)—State of Vermont, Agency of Environmental Protection, Box 489, Montpelier, Vermont 05602.

[42 FR 1214, January 6, 1977]

(VV) Commonwealth of Virginia, Virginia State Air Pollution Control Board, Room 1106, Ninth Street Office Building Richmond, Virginia 23219.

[41 FR 8346, February 26, 1976]

(WW) (i) Washington; State of Washington, Department of Ecology, Olympia, Washington 98504.

(ii) Northwest Air Pollution Authority, 207 Pioneer Building, Second and Pine Streets, Mount Vernon, Washington 98273.

(iii) Puget Sound Air Pollution Control Agency, 410 West Harrison Street, Seattle, Washington 98119.

(iv) Spokane County Air Pollution Control Authority, North 811 Jefferson, Spokane, Washington 99201.

(v) Southwest Air Pollution Control Authority, Suite 7601 H, NE Hazel Dell Avenue, Vancouver, Washington 98665.

[41 FR 4263, January 29, 1976]

(XX) [reserved].

(YY) Wisconsin—

Wisconsin Department of Natural Resources, P.O. Box 7921, Madison, Wisconsin 53707.

[42 FR 16778, March 30, 1977]

, State of Wyoming, Air Quality D. ..on of the Department of Environmental Quality, Hathaway Building, Cheyenne, Wyo. 82002.

[42 FR 46304, September 15, 1977]

(AAA), (BBB) [reserved].

(CCC)—U.S. Virgin Islands: U.S. Virgin Islands Department of Conservation and Cultural Affairs, P.O. Box 578, Charlotte Amalie, St. Thomas, U.S. Virgin Islands 00801.

[41 FR 34628, August 16, 1976]

(DDD) [reserved].

[39 FR 37987, October 25, 1974; 40 FR 18169, April 25, 1975; 40 FR 42194, September 11, 1975; 40 FR 45170, October 1, 1975]

§ 60.5 Determination of construction or modification.

(a) When requested to do so by an owner or operator, the Administrator will make a determination of whether action taken or intended to be taken by such owner or operator constitutes construction (including reconstruction) or modification or the commencement thereof within the meaning of this part.

(b) The Administrator will respond to any request for a determination under paragraph (a) of this section within 30 days of receipt of such request.

[40 FR 58415, December 16, 1975]

§ 60.6 Review of plans.

(a) When requested to do so by an owner or operator, the Administrator will review plans for construction or modification for the purpose of providing technical advice to the owner or operator.

(b) (1) A separate request shall be submitted for each construction or modification project.

(2) Each request shall identify the location of such project, and be accompanied by technical information describing the proposed nature, size, design, and method of operation of each affected facility involved in such project, including information on any requipment to be used for measurement or control of emissions.

(c) Neither a request for plans review nor advice furnished by the Administrator in response to such request shall (1) relieve an owner or operator of legal responsibility for compliance with any provision of this part or of any applicable State or local requirement, or (2) prevent the Administrator from implementing or enforcing any provision of this part or taking any other action authorized by the Act.

§ 60.7 Notification and recordkeeping.

(a) Any owner or operator subject to the provisions of this part shall furnish the Administrator written notification as follows:

(1) A notification of the date construction (or reconstruction as defined under § 60.15) of an affected facility is commenced postmarked no later than 30 days after such date. This requirement shall not apply in the case of mass-produced facilities which are purchased in completed form.

(2) A notification of the anticipated date of initial startup of an affected facility postmarked not more than 60 days nor less than 30 days prior to such date.

(3) A notification of the actual date of initial startup of an affected facility postmarked within 15 days after such date.

(4) A notification of any physical or operational change to an existing facility which may increase the emission rate of any air pollutant to which a standard applies, unless that change is specifically exempted under an applicable subpart or in § 60.14(e) and the exemption is not denied under § 60.14 (d) (4). This notice shall be postmarked 60 days or as soon as practicable before the change is commenced and shall include information describing the precise nature of the change, present and proposed emission control systems, productive capacity of the facility before and after the change, and the expected completion date of the change. The Administrator may request additional relevant information subsequent to this notice.

[40 FR 58415, December 16, 1975]

(5) A notification of the date upon which demonstration of the continuous monitoring system performance commences in accordance with § 60.13(c). Notification shall be postmarked not less than 30 days prior to such date.

(b) Any owner or operator subject to the provisions of this part shall maintain records of the occurrence and duration of any startup, shutdown, or malfunction in the operation of an affected facility; any malfunction of the air pollution control equipment; or any periods during which a continuous monitoring system or monitoring device is inoperative.

(c) Each owner or operator required to install a continuous monitoring system shall submit a written report of excess emissions (as defined in applicable subparts) to the Administrator for every calendar quarter. All quarterly reports shall be postmarked by the 30th day following the end of each calendar quarter and shall include the following information:

(1) The magnitude of excess emissions computed in accordance with § 60.13(h), any conversion factor(s) used, and the date and time of commencement and completion of each time period of excess emissions.

(2) Specific identification of each period of excess emissions that occurs during startups, shutdowns, and malfunctions of the affected facility. The nature and cause of any malfunction (if known), the corrective action taken or preventative measures adopted.

(3) The date and time identifying each period during which the continuous monitoring system was inoperative except for zero and span checks and the nature of the system repairs or adjustments.

(4) When no excess emissions have occurred or the continuous monitoring system(s) have not been inoperative, repaired, or adjusted, such information shall be stated in the report.

(d) Any owner or operator subject to the provisions of this part shall maintain a file of all measurements, including continuous monitoring system, monitoring device, and performance testing measurements; all continuous monitoring system performance evaluations; all continuous monitoring system or monitoring device calibration checks; adjustments and maintenance performed on these systems or devices; and all other information required by this part recorded in a permanent form suitable for inspection. The file shall be retained for at least two years following the date of such

measurements, maintenance, reports, and records.

[40 FR 46250, October 6, 1975]

(e) If notification substantially similar to that in paragraph (a) of this section is required by any other State or local agency, sending the Administrator a copy of that notification will satisfy the requirements of paragraph (a) of this section.

[40 FR 58415, December 16, 1975]

(Sec. 114 of the Clean Air Act as amended (42 U.S.C. 7414).)

§ 60.8 Performance tests.

(a) Within 60 days after achieving the maximum production rate at which the affected facility will be operated, but not later than 180 days after initial startup of such facility and at such other times as may be required by the Administrator under section 114 of the Act, the owner or operator of such facility shall conduct performance test(s) and furnish the Administrator a written report of the results of such performance test(s).

(b) Performance tests shall be conducted and data reduced in accordance with the test methods and procedures contained in each applicable subpart unless the Administrator (1) specifies or approves, in specific cases, the use of a reference method with minor changes in methodology, (2) approves the use of an equivalent method, (3) approves the use of an alternative method the results of which he has determined to be adequate for indicating whether a specific source is in compliance, or (4) waives the requirement for performance tests because the owner or operator of a source has demonstrated by other means to the Administrator's satisfaction that the affected facility is in compliance with the standard. Nothing in this paragraph shall be construed to abrogate the Administrator's authority to require testing under section 114 of the Act.

(c) Performance tests shall be conducted under such conditions as the Administrator shall specify to the plant operator based on representative performance of the affected facility. The owner or operator shall make available to the Administrator such records as may be necessary to determine the conditions of the performance tests. Operations during periods of startup, shutdown, and malfunction shall not constitute representative conditions for the purpose of a performance test nor shall emissions in excess of the level of the applicable emission limit during periods of startup, shutdown, and malfunction be considered a violation of the applicable emission limit unless otherwise specified in the applicable standard.

[42 FR 57125, November 1, 1977]

(d) The owner or operator of an affected facility shall provide the Administrator 30 days prior notice of the performance test to afford the Administrator the opportunity to have an observer present.

(e) The owner or operator of an affected facility shall provide, or cause to be provided, performance testing facilities as follows:

(1) Sampling ports adequate for test methods applicable to such facility.

(2) Safe sampling platform(s).

(3) Safe access to sampling platform(s).

(4) Utilities for sampling and testing equipment.

(f) Each performance test shall consist of three separate runs using the applicable test method. Each run shall be conducted for the time and under the conditions specified in the applicable standard. For the purpose of determining compliance with an applicable standard, the arithmetic means of results of the three runs shall apply. In the event that a sample is accidentally lost or conditions occur in which one of the three runs must be discontinued because of forced shutdown, failure of an irreplaceable portion of the sample train, extreme meteorological conditions, or other circumstances, beyond the owner or operator's control, compliance may, upon the Administrator's approval, be determined using the arithmetic mean of the results of the two other runs.

(Sec. 114 of the Clean Air Act as amended (42 U.S.C. 7416).)

§ 60.9 Availability of information.

The availability to the public of information provided to, or otherwise obtained by, the Administrator under this Part shall be governed by Part 2 of this chapter. (Information submitted voluntarily to the Administrator for the purposes of §§ 60.5 and 60.6 is governed by § 2.201 through § 2.213 of this chapter and not by § 2.301 of this chapter.)

[41 FR 36918, September 1, 1976]

(Sec. 114 of the Clean Air Act as amended (42 U.S.C. 7416).)

§ 60.10 State authority.

The provisions of this part shall not be construed in any manner to preclude any State or political subdivision thereof from:

(a) Adopting and enforcing any emission standard or limitation applicable to an affected facility, provided that such emission standard or limitation is not less stringent than the standard applicable to such facility.

(b) Requiring the owner or operator of an affected facility to obtain permits, licenses, or approvals prior to initiating construction, modification, or operation of such facility.

(Sec. 114 of the Clean Air Act as amended (42 U.S.C. 7416).)

§ 60.11 Compliance with standards and maintenance requirements.

(a) Compliance with standards in this part, other than opacity standards, shall be determined only by performance tests established by § 60.8.

(b) Compliance with opacity standards in this part shall be determined by conducting observations in accordance with Reference Method 9 in Appendix A of this part or any alternative method that is approved by the Administrator. Opacity readings of portions of plumes which contain condensed, uncombined water vapor shall not be used for purposes of determining compliance with opacity standards. The results of continuous monitoring by transmissometer which indicate that the opacity at the time visual observations were made was not in excess of the standard are probative but not conclusive evidence of the actual opacity of an emission, provided that the source shall meet the burden of proving that the instrument used meets (at the time of the alleged violation) Performance Specification 1 in Appendix B of this part, has been properly maintained and (at the time of the alleged violation) calibrated, and that the resulting data have not been tampered with in any way.

[42 FR 26205, May 23, 1977]

(c) The opacity standards set forth in this part shall apply at all times except during periods of startup, shutdown, malfunction, and as otherwise provided in the applicable standard.

(d) At all times, including periods of startup, shutdown, and malfunction, owners and operators shall, to the extent practicable, maintain and operate any affected facility including associated air pollution control equipment in a manner consistent with good air pollution control practice for minimizing emissions. Determination of whether acceptable operating and maintenance procedures are being used will be based on information available to the Administrator which may include, but is not limited to, monitoring results, opacity observations, review of operating and maintenance procedures, and inspection of the source.

(e)(1) An owner or operator of an affected facility may request the Administrator to determine opacity of emissions from the affected facility during the initial performance tests required by Sec. 60.8.

(2) Upon receipt from such owner or operator of the written report of the re-

sults of the performance tests required by § 60.8, the Administrator will make a finding concerning compliance with opacity and other applicable standards. If the Administrator finds that an affected facility is in compliance with all applicable standards for which performance tests are conducted in accordance with § 60.8 of this part but during the time such performance tests are being conducted fails to meet any applicable opacity standard, he shall notify the owner or operator and advise him that he may petition the Administrator within 10 days of receipt of notification to make appropriate adjustment to the opacity standard for the affected facility.

(3) The Administrator will grant such a petition upon a demonstration by the owner or operator that the affected facility and associated air pollution control equipment was operated and maintained in a manner to minimize the opacity of emissions during the performance tests; that the performance tests were performed under the conditions established by the Administrator; and that the affected facility and associated air pollution control equipment were incapable of being adjusted or operated to meet the applicable opacity standard.

(4) The Administrator will establish an opacity standard for the affected facility meeting the above requirements at a level at which the source will be able, as indicated by the performance and opacity tests, to meet the opacity standard at all times during which the source is meeting the mass or concentration emission standard. The Administrator will promulgate the new opacity standard in the FEDERAL REGISTER.

[39 FR 39872, November 12, 1974]

(Sec. 114 of the Clean Air Act as amended (42 U.S.C. 7416).)

§ 60.12 Circumvention.

No owner or operator subject to the provisions of this part shall build, erect, install, or use any article, machine, equipment or process, the use of which conceals an emission which would otherwise constitute a violation of an applicable standard. Such concealment includes, but is not limited to, the use of gaseous diluents to achieve compliance with an opacity standard or with a standard which is based on the concentration of a pollutant in the gases discharged to the atmosphere.

§ 60.13 Monitoring requirements.

(a) For the purposes of this section, all continuous monitoring systems required under applicable subparts shall be subject to the provisions of this section upon promulgation of performance specifications for continuous monitoring system under Appendix B to this part, unless:

(1) The continuous monitoring system is subject to the provisions of paragraphs (c)(2) and (c)(3) of this section, or

(2) otherwise specified in an applicable subpart or by the Administrator.

[43 FR 7572, February 23, 1978]

(b) All continuous monitoring systems and monitoring devices shall be installed and operational prior to conducting performance tests under § 60.8. Verification of operational status shall, as a minimum, consist of the following:

(1) For continuous monitoring systems referenced in paragraph (c)(1) of this section, completion of the conditioning period specified by applicable requirements in Appendix B.

(2) For continuous monitoring systems referenced in paragraph (c)(2) of this section, completion of seven days of operation.

(3) For monitoring devices referenced in applicable subparts, completion of the manufacturer's written requirements or recommendations for cnecking the operation or calibration of the device.

(c) During any performance tests required under § 60.8 or within 30 days thereafter and at such other times as may be required by the Administrator under section 114 of the Act, the owner or operator of any affected facility shall conduct continuous monitoring system performance evaluations and furnish the Administrator within 60 days thereof two or, upon request, more copies of a written report of the results of such tests. These continuous monitoring system performance evaluations shall be conducted in accordance with the following specifications and procedures:

(1) Continuous monitoring systems listed within this paragraph except as provided in paragraph (c)(2) of this section shall be evaluated in accordance with the requirements and procedures contained in the applicable performance specification of Appendix B as follows:

(i) Continuous monitoring systems for measuring opacity of emissions shall comply with Performance Specification 1.

(ii) Continuous monitoring systems for measuring nitrogen oxides emissions shall comply with Performance Specification 2.

(iii) Continuous monitoring systems for measuring sulfur dioxide emissions shall comply with Performance Specification 2.

(iv) Continuous monitoring systems for measuring the oxygen content or carbon dioxide content of effluent gases shall comply with Performance Specification 3.

(2) An owner or operator who, prior to September 11, 1974, entered into a binding contractual obligation to purchase specific continuous monitoring system components except as referenced by paragraph (c)(2)(iii) of this section shall comply with the following requirements:

(i) Continuous monitoring systems for measuring opacity of emissions shall be capable of measuring emission levels within ±20 percent with a confidence level of 95 percent. The Calibration Error Test and associated calculation procedures set forth in Performance Specification 1 of Appendix B shall be used for demonstrating compliance with this specification.

(ii) Continuous monitoring systems for measurement of nitrogen oxides or sulfur dioxide shall be capable of measuring emission levels within ±20 percent with a confidence level of 95 percent. The Calibration Error Test, the Field Test for Accuracy (Relative), and associated operating and calculation procedures set forth in Performance Specification 2 of Appendix B shall be used for demonstrating compliance with this specification.

(iii) Owners or operators of all continuous monitoring systems installed on an affected facility prior to October 6, 1975, are not required to conduct tests under paragraphs (c)(2)(i) and/or (ii) of this section unless requested by the Administrator.

(3) All continuous monitoring systems referenced by paragraph (c)(2) of this section shall be upgraded or replaced (if necessary) with new continuous monitoring systems, and the new or improved systems shall be demonstrated to comply with applicable performance specifications under paragraph (c)(1) of this section on or before September 11, 1979.

[42 FR 5936, January 31, 1977]

(d) Owners or operators of all continuous monitoring systems installed in accordance with the provisions of this part shall check the zero and span drift at least once daily in accordance with the method prescribed by the manufacturer of such systems unless the manufacturer recommends adjustments at shorter intervals, in which case such recommendations shall be followed. The zero and span shall, as a minimum, be adjusted whenever the 24-hour zero drift or 24-hour calibration drift limits of the applicable performance specifications in Appendix B are exceeded. For continuous monitoring systems measuring opacity of

emissions, the optical surfaces exposed to the effluent gases shall be cleaned prior to performing the zero or span drift adjustments except that for systems using automatic zero adjustments, the optical surfaces shall be cleaned when the cumulative automatic zero compensation exceeds four percent opacity. Unless otherwise approved by the Administrator, the following procedures, as applicable, shall be followed:

(1) For extractive continuous monitoring systems measuring gases, minimum procedures shall include introducing applicable zero and span gas mixtures into the measurement system as near the probe as is practical. Span and zero gases certified by their manufacturer to be traceable to National Bureau of Standards reference gases shall be used whenever these reference gases are available. The span and zero gas mixtures shall be the same composition as specified in Appendix B of this part. Every six months from date of manufacture, span and zero gases shall be reanalyzed by conducting triplicate analyses with Reference Methods 6 for SO_2, 7 for NO_x, and 3 for O_2 and CO_2, respectively. The gases may be analyzed at less frequent intervals if longer shelf lives are guaranteed by the manufacturer.

(2) For non-extractive continuous monitoring systems measuring gases, minimum procedures shall include upscale check(s) using a certified calibration gas cell or test cell which is functionally equivalent to a known gas concentration. The zero check may be performed by computing the zero value from upscale measurements or by mechanically producing a zero condition.

(3) For continuous monitoring systems measuring opacity of emissions, minimum procedures shall include a method for producing a simulated zero opacity condition and an upscale (span) opacity condition using a certified neutral density filter or other related technique to produce a known obscuration of the light beam. Such procedures shall provide a system check of the analyzer internal optical surfaces and all electronic circuitry including the lamp and photodetector assembly.

(e) Except for system breakdowns, repairs, calibration checks, and zero and span adjustments required under paragraph (d) of this section, all continuous monitoring systems shall be in continuous operation and shall meet minimum frequency of operation requirements as follows:

(1) All continuous monitoring systems referenced by paragraphs (c)(1) and (c)(2) of this section for measuring opacity of emissions shall complete a minimum of one cycle of sampling and analyzing for each successive ten-second period and one cycle of data recording for each successive six-minute period.

[42 FR 5936, January 31, 1977]

(2) All continuous monitoring systems referenced by paragraph (c)(1) of this section for measuring oxides of nitrogen, sulfur dioxide, carbon dioxide, or oxygen shall complete a minimum of one cycle of operation (sampling, analyzing, and data recording) for each successive 15-minute period.

(3) All continuous monitoring systems referenced by paragraph (c)(2) of this section, except opacity, shall complete a minimum of one cycle of operation (sampling, analyzing, and data recording) for each successive one-hour period.

(f) All continuous monitoring systems or monitoring devices shall be installed such that representative measurements of emissions or process parameters from the affected facility are obtained. Additional procedures for location of continuous monitoring systems contained in the applicable Performance Specifications of Appendix B of this part shall be used.

(g) When the effluents from a single affected facility or two or more affected facilities subject to the same emission standards are combined before being released to the atmosphere, the owner or operator may install applicable continuous monitoring systems on each effluent or on the combined effluent. When the affected facilities are not subject to the same emission standards, separate continuous monitoring systems shall be installed on each effluent. When the effluent from one affected facility is released to the atmosphere through more than one point, the owner or operator shall install applicable continuous monitoring systems on each separate effluent unless the installation of fewer systems is approved by the Administrator.

(h) Owners or operaters of all continuous monitoring systems for measurement of opacity shall reduce all data to six-minute averages and for systems other than opacity to one-hour averages for time periods under § 60.2 (x) and (r) respectively. Six-minute opacity averages shall be calculated from 24 or more data points equally spaced over each six-minute period. For systems other than opacity, one-hour averages shall be computed from four or more data points equally spaced over each one-hour period. Data recorded during periods of system breakdowns, repairs, calibration checks, and zero and span adjustments shall not be included in the data averages computed under this paragraph. An arithmetic or integrated average of all data may be used. The data output of all continuous monitoring systems may be recorded in reduced or nonreduced form (e.g. ppm pollutant and percent O_2 or lb/million Btu of pollutant). All excess emissions shall be converted into units of the standard using the applicable conversion procedures specified in subparts. After conversion into units of the standard, the data may be rounded to the same number of significant digits used in subparts to specify the applicable standard (e.g., rounded to the nearest one percent opacity).

(i) After receipt and consideration of written application, the Administrator may approve alternatives to any monitoring procedures or requirements of this part including, but not limited to the following:

[41 FR 35185, August 20, 1976]

(1) Alternative monitoring requirements when installation of a continuous monitoring system or monitoring device specified by this part would not provide accurate measurements due to liquid water or other interferences caused by substances with the effluent gases.

(2) Alternative monitoring requirements when the affected facility is infrequently operated.

(3) Alternative monitoring requirements to accommodate continuous monitoring systems that require additional measurements to correct for stack moisture conditions.

(4) Alternative locations for installing continuous monitoring systems or monitoring devices when the owner or operator can demonstrate that installation at alternate locations will enable accurate and representative measurements.

(5) Alternative methods of converting pollutant concentration measurements to units of the standards.

(6) Alternative procedures for performing daily checks of zero and span drift that do not involve use of span gases or test cells.

(7) Alternatives to the A.S.T.M. test methods or sampling procedures specified by any subpart.

(8) Alternative continuous monitoring systems that do not meet the design or performance requirements in Performance Specification 1, Appendix B, but adequately demonstrate a definite and consistent relationship between its measurements and the measurements of opacity by a system complying with the requirements in Performance Specification 1. The Administrator may require that such demonstration be performed for each affected facility.

(a) Alternative monitoring requirements when the effluent from a single affected facility or the combined effluent from two or more affected facilities are

released to the atmosphere through more than one point.

(Sec. 114 of the Clean Air Act as amended (42 U.S.C. 7414).)

§ 60.14 Modification.

(a) Except as provided under paragraphs (d), (e) and (f) of this section, any physical or operational change to an existing facility which results in an increase in the emission rate to the atmosphere of any pollutant to which a standard applies shall be considered a modification within the meaning of section 111 of the Act. Upon modification, an existing facility shall become an affected facility for each pollutant to which a standard applies and for which there is an increase in the emission rate to the atmosphere.

(b) Emission rate shall be expressed as kg/hr of any pollutant discharged into the atmosphere for which a standard is applicable. The Administrator shall use the following to determine emission rate:

(1) Emission factors as specified in the latest issue of "Compilation of Air Pollutant Emission Factors," EPA Publication No. AP-42, or other emission factors determined by the Administrator to be superior to AP-42 emission factors, in cases where utilization of emission factors demonstrate that the emission level resulting from the physical or operational change will either clearly increase or clearly not increase.

(2) Material balances, continuous monitor data, or manual emission tests in cases where utilization of emission factors as referenced in paragraph (b)(1) of this section does not demonstrate to the Administrator's satisfaction whether the emission level resulting from the physical or operational change will either clearly increase or clearly not increase, or where an owner or operator demonstrates to the Administrator's satisfaction that there are reasonable grounds to dispute the result obtained by the Administrator utilizing emission factors as referenced in paragraph (b)(1) of this section. When the emission rate is based on results from manual emission tests or continuous monitoring systems, the procedures specified in Appendix C of this part shall be used to determine whether an increase in emission rate has occurred. Tests shall be conducted under such conditions as the Administrator shall specify to the owner or operator based on representative performance of the facility. At least three valid test runs must be conducted before and at least three after the physical or operational change. All operating parameters which may affect emissions must be held constant to the maximum feasible degree for all test runs.

(c) The addition of an affected facility to a stationary source as an expansion to that source or as a replacement for an existing facility shall not by itself bring within the applicability of this part any other facility within that source.

(d) A modification shall not be deemed to occur if an existing facility undergoes a physical or operational change where the owner or operator demonstrates to the Administrator's satisfaction (by any of the procedures prescribed under paragraph (b) of this section) that the total emission rate of any pollutant has not increased from all facilities within the stationary source to which appropriate reference, equivalent, or alternative methods, as defined in § 60.2 (s), (t) and (u), can be applied. An owner or operator may completely and permanently close any facility within a stationary source to prevent an increase in the total emission rate regardless of whether such reference, equivalent or alternative method can be applied, if the decrease in emission rate from such closure can be adequately determined by any of the procedures prescribed under paragraph (b) of this section. The owner or operator of the source shall have the burden of demonstrating compliance with this section.

(1) Such demonstration shall be in writing and shall include: (i) The name and address of the owner or operator.

(ii) The location of the stationary source.

(iii) A complete description of the existing facility undergoing the physical or operational change resulting in an increase in emission rate, any applicable control system, and the physical or operational change to such facility.

(iv) The emission rates into the atmosphere from the existing facility of each pollutant to which a standard applies determined before and after the physical or operational change takes place, to the extent such information is known or can be predicted.

(v) A complete description of each facility and the control systems, if any, for those facilities within the stationary source where the emission rate of each pollutant in question will be decreased to compensate for the increase in emission rate from the existing facility undergoing the physical or operational change.

(vi) The emission rates into the atmosphere of the pollutants in question from each facility described under paragraph (d)(1)(v) of this section both before and after the improvement or installation of any applicable control system or any physical or operational changes to such facilities to reduce emission rate.

(vii) A complete description of the procedures and methods used to determine the emission rates.

(2) Compliance with paragraph (d) of this section may be demonstrated by the methods listed in paragraph (b) of this section, where appropriate. Decreases in emissions resulting from requirements of a State implementation plan approved or promulgated under Part 52 of this chapter will not be acceptable. The required reduction in emission rate may be accomplished through the installation or improvement of a control system or through physical or operational changes to facilities including reducing the production of a facility or closing a facility.

(3) Emission rates established for the existing facility which is undergoing a physical or operational change resulting in an increase in the emission rate, and established for the facilities described under paragraph (d)(1)(v) of this section shall become the baseline for determining whether such facilities undergo a modification or are in compliance with standards.

(4) Any emission rate in excess of that rate established under paragraph (d)(3) of this section shall be a violation of these regulations except as otherwise provided in paragraph (e) of this section. However, any owner or operator electing to demonstrate compliance under this paragraph (d) must apply to the Administrator to obtain the use of any exemptions under paragraphs (e)(2), (e)(3), and (e)(4) of this section. The Administrator will grant such exemption only if, in his judgment, the compliance originally demonstrated under this paragraph will not be circumvented or nullified by the utilization of the exemption.

(5) The Administrator may require the use of continuous monitoring devices and compliance with necessary reporting procedures for each facility described in paragraph (d)(1)(iii) and (d)(1)(v) of this section.

(e) The following shall not, by themselves, be considered modifications under this part:

(1) Maintenance, repair, and replacement which the Administrator determines to be routine for a source category, subject to the provisions of paragraph (c) of this section and § 60.15.

(2) An increase in production rate of an existing facility, if that increase can be accomplished without a capital expenditure on the stationary source containing that facility.

(3) An increase in the hours of operation.

(4) Use of an alternative fuel or raw material if, prior to the date any standard under this part becomes applicable to that source type, as provided by § 60.1, the existing facility was designed to accommodate that alternative use. A facility shall be considered to be designed to accommodate an alternative fuel or raw material if that use could be accomplished under the facility's construction specifications, as amended, prior to the change. Conversion to coal required for energy considerations, as specified in section 119(d)(5) of the Act, shall not be considered a modification.

(5) The addition or use of any system or device whose primary function is the reduction of air pollutants, except when an emission control system is removed or is replaced by a system which the Administrator determines to be less environmentally beneficial.

(6) The relocation or change in ownership of an existing facility.

(f) Special provisions set forth under an applicable subpart of this part shall supersede any conflicting provisions of this section.

(g) Within 180 days of the completion of any physical or operational change subject to the control measures specified in paragraphs (a) or (d) of this section, compliance with all applicable standards must be achieved.

§ 60.15 Reconstruction.

(a) An existing facility, upon reconstruction, becomes an affected facility, irrespective of any change in emission rate.

(b) "Reconstruction" means the replacement of components of an existing facility to such an extent that:

(1) The fixed capital cost of the new components exceeds 50 percent of the fixed capital cost that would be required to construct a comparable entirely new facility, and

(2) It is technologically and economically feasible to meet the applicable standards set forth in this part.

(c) "Fixed capital cost" means the capital needed to provide all the depreciable components.

(d) If an owner or operator of an existing facility proposes to replace components, and the fixed capital cost of the new components exceeds 50 percent of the fixed capital cost that would be required to construct a comparable entirely new facility, he shall notify the Administrator of the proposed replacements. The notice must be postmarked 60 days (or as soon as practicable) before construction of the replacements is commenced and must include the following information:

(1) Name and address of the owner or operator.

(2) The location of the existing facility.

(3) A brief description of the existing facility and the components which are to be replaced.

(4) A description of the existing air pollution control equipment and the proposed air pollution control equipment.

(5) An estimate of the fixed capital cost of the replacements and of constructing a comparable entirely new facility.

(6) The estimated life of the existing facility after the replacements.

(7) A discussion of any economic or technical limitations the facility may have in complying with the applicable standards of performance after the proposed replacements.

(e) The Administrator will determine, within 30 days of the receipt of the notice required by paragraph (d) of this section and any additional information he may reasonably require, whether the proposed replacement constitutes reconstruction.

(f) The Administrator's determination under paragraph (e) shall be based on:

(1) The fixed capital cost of the replacements in comparison to the fixed capital cost that would be required to construct a comparable entirely new facility;

(2) The estimated life of the facility after the replacements compared to the life of a comparable entirely new facility;

(3) The extent to which the components being replaced cause or contribute to the emissions from the facility; and

(4) Any economic or technical limitations on compliance with applicable standards of performance which are inherent in the proposed replacements.

(g) Individual subparts of this part may include specific provisions which refine and delimit the concept of reconstruction set forth in this section.

Subpart B—Adoption and Submittal of State Plans for Designated Facilities

[40 FR 53340, November 17, 1975]

§ 60.20 Applicability.

The provisions of this subpart apply to States upon publication of a final guideline document under § 60.22(a).

§ 60.21 Definitions.

Terms used but not defined in this subpart shall have the meaning given them in the Act and in subpart A:

(a) "Designated pollutant" means any air pollutant, emissions of which are subject to a standard of performance for new stationary sources but for which air quality criteria have not been issued, and which is not included on a list published under section 108(a) or section 112(b)(1)(A) of the Act.

(b) "Designated facility" means any existing facility (see § 60.2(aa)) which emits a designated pollutant and which would be subject to a standard of performance for that pollutant if the existing facility were an affected facility (see § 60.2(e)).

(c) "Plan" means a plan under section 111(d) of the Act which establishes emission standards for designated pollutants from designated facilities and provides for the implementation and enforcement of such emission standards.

(d) "Applicable plan" means the plan, or most recent revision thereof, which has been approved under § 60.27(b) or promulgated under § 60.27(d).

(e) "Emission guideline" means a guideline set forth in subpart C of this part, or in a final guideline document published under § 60.22(a), which reflects the degree of emission reduction achievable through the application of the best system of emission reduction which (taking into account the cost of such reduction) the Administrator has determined has been adequately demonstrated for designated facilities.

(f) "Emission standard" means a legally enforceable regulation setting forth an allowable rate of emissions into the atmosphere, or prescribing equipment specifications for control of air pollution emissions.

(g) "Compliance schedule" means a legally enforceable schedule specifying a date or dates by which a source or category or sources must comply with specific emission standards contained in a plan or with any increments of progress to achieve such compliance.

(h) "Increments of progress" means steps to achieve compliance which must be taken by an owner or operator of a designated facility, including:

(1) Submittal of a final control plan for the designated facility to the appropriate air pollution control agency;

(2) Awarding of contracts for emission control systems or for process modifications, or issuance of orders for the purchase of component parts to accomplish emission control or process modification.

(3) Initiation of on-site construction or installation of emission control equipment or process change;

(4) Completion of on-site construction or installation of emission control equipment or process change; and

(5) Final compliance.

(Sec. 114 of the Clean Air Act as amended (42 U.S.C. 7414).)

Subpart Z—Standards of Performance for Ferroalloy Production Facilities

[41 FR 18498, May 4, 1976]

§ 60.260 Applicability and designation of affected facility.

[42 FR 37936, July 25, 1977]

(a) The provisions of this subpart are applicable to the following affected facilities: electric submerged arc furnaces which produce silicon metal, ferrosilicon, calcium silicon, silicomanganese zircon-

Reproduced by special permission from the *Environmental Reporter* copyright ©1977 by The Bureau of National Affairs, Washington, D.C.

ium, ferrochrome silicon, silvery iron, high-carbon ferrochrome, charge chrome, standard ferromanganese, silicomanganese, ferromanganese silicon, or calcium carbide; and dust-handling equipment.

(b) Any facility under paragraph (a) of this section that commences construction or modification after October 21, 1974, is subject to the requirements of this subpart.

§ 60.261 Definitions.

As used in this subpart, all terms not defined herein shall have the meaning given them in the Act and in subpart A of this part.

(a) "Electric submerged arc furnace" means any furnace wherein electrical energy is converted to heat energy by transmission of current between electrodes partially submerged in the furnace charge.

(b) "Furnace charge" means any material introduced into the electric submerged arc furnace and may consist of, but is not limited to, ores, slag, carbonaceous material, and limestone.

(c) "Product change" means any change in the composition of the furnace charge that would cause the electric submerged arc furnace to become subject to a different mass standard applicable under this subpart.

(d) "Slag" means the more or less completely fused and vitrified matter separated during the reduction of a metal from its ore.

(e) "Tapping" means the removal of slag or product from the electric submerged arc furnace under normal operating conditions such as removal of metal under normal pressure and movement by gravity down the spout into the ladle.

(f) "Tapping period" means the time duration from initiation of the process of opening the tap hole until plugging of the tap hole is complete.

(g) "Furnace cycle" means the time period from completion of a furnace product tap to the completion of the next consecutive product tap.

(h) "Tapping station" means that general area where molten product or slag is removed from the electric submerged arc furnace.

(i) "Blowing tap" means any tap in which an evolution of gas forces or projects jets of flame or metal sparks beyond the ladle, runner, or collection hood.

(j) "Furnace power input" means the resistive electrical power consumption of an electric submerged arc furnace as measured in kilowatts.

(k) "Dust-handling equipment" means any equipment used to handle particulate matter collected by the air pollution control device (and located at or near such device) serving any electric submerged arc furnace subject to this subpart.

(l) "Control device" means the air pollution control equipment used to remove particulate matter generated by an electric submerged arc furnace from an effluent gas stream.

(m) "Capture system" means the equipment (including hoods, ducts, fans, dampers, etc.) used to capture or transport particulate matter generated by an affected electric submerged arc furnace to the control device.

(n) "Standard ferromanganese" means that alloy as defined by A.S.T.M. designation A99–66.

(o) "Silicomanganese" means that alloy as defined by A.S.T.M. designation A483–66.

(p) "Calcium carbide" means material containing 70 to 85 percent calcium carbide by weight.

(q) "High-carbon ferrochrome" means that alloy as defined by A.S.T.M. designation A101–66 grades HC1 through HC6.

(r) "Charge chrome" means that alloy containing 52 to 70 percent by weight chromium, 5 to 8 percent by weight carbon, and 3 to 6 percent by weight silicon.

(s) "Silvery iron" means any ferrosilicon, as defined by A.S.T.M. designation 100–69, which contains less than 30 percent silicon.

(t) "Ferrochrome silicon" means that alloy as defined by A.S.T.M. designation A482–66.

(u) "Silicomanganese zirconium" means that alloy containing 60 to 65 percent by weight silicon, 1.5 to 2.5 percent by weight calcium, 5 to 7 percent by weight zirconium, 0.75 to 1.25 percent by weight aluminum, 5 to 7 percent by weight manganese, and 2 to 3 percent by weight barium.

(v) "Calcium silicon" means that alloy as defined by A.S.T.M. designation A495–64.

(w) "Ferrosilicon" means that alloy as defined by A.S.T.M. designation A100–69 grades A, B, C, D, and E which contains 50 or more percent by weight silicon.

(x) "Silicon metal" means any silicon alloy containing more than 96 percent silicon by weight.

(y) "Ferromanganese silicon" means that alloy containing 63 to 66 percent by weight manganese, 28 to 32 percent by weight silicon, and a maximum of 0.08 percent by weight carbon.

§ 60.262 Standard for particulate matter.

(a) On and after the date on which the performance test required to be conducted by § 60.8 is completed, no owner or operator subject to the provisions of this subpart shall cause to be discharged into the atmosphere from any electric submerged arc furnace any gases which:

(1) Exit from a control device and contain particulate matter in excess of 0.45 kg/MW-hr (0.99 lb/MW-hr) while silicon metal, ferrosilicon, calcium silicon, or silicomanganese zirconium is being produced.

(2) Exit from a control device and contain particulate matter in excess of 0.23 kg/MW-hr (0.51 lb/MW-hr) while high-carbon ferrochrome, charge chrome, standard ferromanganese, silicomanganese, calcium carbide, ferrochrome silicon, ferromanganese silicon, or silvery iron is being produced.

(3) Exit from a control device and exhibit 15 percent opacity or greater.

(4) Exit from an electric submerged arc furnace and escape the capture system and are visible without the aid of instruments. The requirements under this subparagraph apply only during periods when flow rates are being established under § 60.265(d).

(5) Escape the capture system at the tapping station and are visible without the aid of instruments for more than 40 percent of each tapping period. There are no limitations on visible emissions under this subparagraph when a blowing tap occurs. The requirements under this subparagraph apply only during periods when flow rates are being established under § 60.265(d).

(b) On and after the date on which the performance test required to be conducted by § 60.8 is completed, no owner or operator subject to the provisions of this subpart shall cause to be discharged into the atmosphere from any dust-handling equipment any gases which exhibit 10 percent opacity or greater.

§ 60.263 Standard for carbon monoxide.

(a) On and after the date on which the performance test required to be conducted by § 60.8 is completed, no owner or operator subject to the provisions of this subpart shall cause to be discharged into the atmosphere from any electric submerged arc furnace any gases which contain, on a dry basis, 20 or greater volume percent of carbon monoxide. Combustion of such gases under conditions acceptable to the Administrator constitutes compliance with this section. Acceptable conditions include, but are not limited to, flaring of gases or use of gases as fuel for other processes.

§ 60.264 Emission monitoring.

(a) The owner or operator subject to the provisions of this subpart shall install, calibrate, maintain and operate a continuous monitoring system for measurement of the opacity of emissions discharged into the atmosphere from the control device(s).

(b) For the purpose of reports required under § 60.7(c), the owner or operator shall report as excess emissions all six-minute periods in which the average opacity is 15 percent or greater.

(c) The owner or operator subject to the provisions of this subpart shall submit a written report of any product change to the Administrator. Reports of product changes must be postmarked not later than 30 days after implementation of the product change.

(Sec. 114 of the Clean Air Act as amended (42 U.S.C. 7414).)

§ 60.265 Monitoring of operations.

(a) The owner or operator of any electric submerged arc furnace subject to the provisions of this subpart shall maintain daily records of the following information:

(1) Product being produced.

(2) Description of constituents of furnace charge, including the quantity, by weight.

(3) Time and duration of each tapping period and the identification of material tapped (slag or product.)

(4) All furnace power input data obtained under paragraph (b) of this section.

(5) All flow rate data obtained under paragraph (c) of this section or all fan motor power consumption and pressure drop data obtained under paragraph (e) of this section.

(b) The owner or operator subject to the provisions of this subpart shall install, calibrate, maintain, and operate a device to measure and continuously record the furnace power input. The furnace power input may be measured at the output or input side of the transformer. The device must have an accuracy of ±5 percent over its operating range.

(c) The owner or operator subject to the provisions of this subpart shall install, calibrate, and maintain a monitoring device that continuously measures and records the volumetric flow rate through each separately ducted hood of the capture system, except as provided under paragraph (e) of this section. The owner or operator of an electric submerged arc furnace that is equipped with a water cooled cover which is designed to contain and prevent escape of the generated gas and particulate matter shall monitor only the volumetric flow rate through the capture system for control of emissions from the tapping station. The owner or operator may install the monitoring device(s) in any appropriate location in the exhaust duct such that reproducible flow rate monitoring will result. The flow rate monitoring device must have an accuracy of ±10 percent over its normal operating range and must be calibrated according to the manufacturer's instructions. The Administrator may require the owner or operator to demonstrate the accuracy of the monitoring device relative to Methods 1 and 2 of Appendix A to this part.

(d) When performance tests are conducted under the provisions of § 60.8 of this part to demonstrate compliance with the standards under §§ 60.262(a)(4) and (5), the volumetric flow rate through each separately ducted hood of the capture system must be determined using the monitoring device required under paragraph (c) of this section. The volumetric flow rates must be determined for furnace power input levels at 50 and 100 percent of the nominal rated capacity of the electric submerged arc furnace. At all times the electric submerged arc furnace is operated, the owner or operator shall maintain the volumetric flow rate at or above the appropriate levels for that furnace power input level determined during the most recent performance test. If emissions due to tapping are captured and ducted separately from emissions of the electric submerged arc furnace, during each tapping period the owner or operator shall maintain the exhaust flow rates through the capture system over the tapping station at or above the levels established during the most recent performance test. Operation at lower flow rates may be considered by the Administrator to be unacceptable operation and maintenance of the affected facility. The owner or operator may request that these flow rates be reestablished by conducting new performance tests under § 60.8 of this part.

(e) The owner or operator may as an alternative to paragraph (c) of this section determine the volumetric flow rate through each fan of the capture system from the fan power consumption, pressure drop across the fan and the fan performance curve. Only data specific to the operation of the affected electric submerged arc furnace are acceptable for demonstration of compliance with the requirements of this paragraph. The owner or operator shall maintain on file a permanent record of the fan performance curve (prepared for a specific temperature) and shall:

(1) Install, calibrate, maintain, and operate a device to continuously measure and record the power consumption of the fan motor (measured in kilowatts), and

(2) Install, calibrate, maintain, and operate a device to continuously measure and record the pressure drop across the fan. The fan power consumption and pressure drop measurements must be synchronized to allow real time comparisons of the data. The monitoring devices must have an accuracy of ±5 percent over their normal operating ranges.

(f) The volumetric flow rate through each fan of the capture system must be determined from the fan power consumption, fan pressure drop, and fan performance curve specified under paragraph (e) of this section, during any performance test required under § 60.8 of this part to demonstrate compliance with the standards under §§ 60.262(a)(4) and (5). The owner or operator shall determine the volumetric flow rate at a representative temperature for furnace power input levels of 50 and 100 percent of the nominal rated capacity of the electric submerged arc furnace. At all times the electric submerged arc furnace is operated, the owner or operator shall maintain the fan power consumption and fan pressure drop at levels such that the volumetric flow rate is at or above the levels established during the most recent performance test for that furnace power input level. If emissions due to tapping are captured and ducted separately from emissions of the electric submerged arc furnace, during each tapping period the owner or operator shall maintain the fan power consumption and fan pressure drop at levels such that the volumetric flow rate is at or above the levels established during the most recent performance test. Operation at lower flow rates may be considered by the Administrator to be unacceptable operation and maintenance of the affected facility. The owner or operator may request that these flow rates be reestablished by conducting new performance tests under § 60.8 of this part. The Administrator may require the owner or operator to verify the fan performance curve by monitoring necessary fan operating parameters and determining the gas volume moved relative to Methods 1 and 2 of Appendix A to this part.

(g) All monitoring devices required under paragraphs (c) and (e) of this section are to be checked for calibration annually in accordance with the procedures under § 60.13(b).

(Sec. 114 of the Clean Air Act as amended (42 U.S.C. 7414).)

§ 60.266 Test methods and procedures.

(a) Reference methods in Appendix A of this part, except as provided in § 60.8(b), shall be used to determine compliance with the standards prescribed in § 60.262 and § 60.263 as follows:

(1) Method 5 for the concentration of particulate matter and the associated moisture content except that the heating systems specified in paragraphs 2.1.2 and 2.1.4 of Method 5 are not to be used when the carbon monoxide content of the gas stream exceeds 10 percent by volume, dry basis.

(2) Method 1 for sample and velocity traverses.

(3) Method 2 for velocity and volumetric flow rate.

(4) Method 3 for gas analysis, including carbon monoxide.

(b) For Method 5, the sampling time for each run is to include an integral number of furnace cycles. The sampling

time for each run must be at least 60 minutes and the minimum sample volume must be 1.8 dscm (64 dscf) when sampling emissions from open electric submerged arc furnaces with wet scrubber control devices, sealed electric submerged arc furnaces, or semi-enclosed electric submerged arc furnaces. When sampling emissions from other types of installations, the sampling time for each run must be at least 200 minutes and the minimum sample volume must be 5.7 dscm (200 dscf). Shorter sampling times or smaller sampling volumes, when necessitated by process variables or other factors, may be approved by the Administrator.

(c) During the performance test, the owner or operator shall record the maximum open hood area (in hoods with segmented or otherwise moveable sides) under which the process is expected to be operated and remain in compliance with all standards. Any future operation of the hooding system with open areas in excess of the maximum is not permitted.

(d) The owner or operator shall construct the control device so that volumetric flow rates and particulate matter emissions can be accurately determined by applicable test methods and procedures.

(e) During any performance test required under §60.8 of this part, the owner or operator shall not allow gaseous diluents to be added to the effluent gas stream after the fabric in an open pressurized fabric filter collector unless the total gas volume flow from the collector is accurately determined and considered in the determination of emissions.

(f) When compliance with §60.263 is to be attained by combusting the gas stream in a flare, the location of the sampling site for particulate matter is to be upstream of the flare.

(g) For each run, particulate matter emissions, expressed in kg/hr (lb/hr), must be determined for each exhaust stream at which emissions are quantified using the following equation:

$$E_n = C_s Q_s$$

where:

E_n = Emissions of particulate matter in kg/hr (lb/hr).

C_s = Concentration of particulate matter in kg/dscm (lb/dscf) as determined by Method 5.

Q_s = Volumetric flow rate of the effluent gas stream in dscm/hr (dscf/hr) as determined by Method 2.

(h) For Method 5, particulate matter emissions from the affected facility, expressed in kg/MW-hr (lb/MW-hr) must be determined for each run using the following equation:

$$E = \frac{\sum_{n=1}^{N} E_n}{p}$$

where:

E = Emissions of particulate from the affected facility, in kg/MW-hr (lb/MW-hr).

N = Total number of exhaust streams at which emissions are quantified.

E_n = Emission of particulate matter from each exhaust stream in kg/hr (lb/hr), as determined in paragraph (g) of this section.

p = Average furnace power input during the sampling period, in megawatts as determined according to § 60.265 (b).

(Sec. 114 of the Clean Air Act as amended (42 U.S.C. 7414).)

ENVIRONMENTAL PROTECTION AGENCY
EFFLUENT GUIDELINES FOR FERROALLOY MANUFACTURING

(40 CFR 424; 39 FR 6806, February 22, 1974; Amended 39 FR 17841, May 21, 1974; 40 FR 8030, February 24, 1975)

Title 40—Protection of the Environment

CHAPTER I—ENVIRONMENTAL PROTECTION AGENCY

SUBCHAPTER N—EFFLUENT GUIDELINES AND STANDARDS

PART 424—FERROALLOY MANUFACTURING POINT SOURCE CATEGORY

Subpart A—Open Electric Furnaces With Wet Air Pollution Control Devices Subcategory

§ 424.10 Applicability; description of the open electric furnaces with wet air pollution control devices subcategory.

The provisions of this subpart are applicable to discharges resulting from the smelting of ferroalloys in open electric furnaces with wet air pollution control devices. This subcategory includes those electric furnaces of such construction or configuration that the furnace off-gases are burned above the furnace charge level by air drawn into the system. After combustion the gases are cleaned in a wet air pollution control device, such as a scrubber, an electrostatic precipitator with water or other aqueous sprays, etc. The provisions of this subpart are not applicable to noncontact cooling water or to those electric furnaces which are covered, closed, sealed, or semi-covered and in which the furnace off-gases are not burned prior to collection (regulated in Subpart B).

§ 424.11 Specialized definitions.

For the purpose of this subpart:

(a) Except as provided below, the general definitions, abbreviations and methods of analysis set forth in 40 CFR 401 shall apply to this subpart.

(b) The term "Mwh" shall mean megawatt hour(s) of electrical energy consumed in the smelting process (furnace power consumption).

§ 424.12 Effluent limitations guidelines representing the degree of effluent reduction attainable by the application of the best practicable control technology currently available.

(a) In establishing the limitations set forth in this section, EPA took into account all information it was able to collect, develop and solicit with respect to factors (such as age and size of plant, raw materials, manufacturing processes, products produced, treatment technology available, energy requirements and costs) which can affect the industry subcategorization and effluent levels established. It is, however, possible that data which would affect these limitations have not been available and, as a result, these limitations should be adjusted for certain plants in this industry. An individual discharger or other interested person may submit evidence to the Regional Administrator (or to the State, if the State has the authority to issue NPDES permits) that factors relating to the equipment or facilities involved, the process applied, or other such factors related to such discharger are fundamentally different from the factors considered in the establishment of the guidelines. On the basis of such evidence or other available information, the Regional Administrator (or the State) will make a written finding that such factors are or are not fundamentally different for that facility compared to those specified in the Development Document. If such fundamentally different factors are found to exist, the Regional Administrator or the State shall establish for the discharger effluent limitations in the NPDES permit either more or less stringent than the limitations established herein, to the extent dictated by such fundamentally different factors. Such limitations must be approved by the Administrator of the Environmental Protection Agency. The Administrator may approve or disapprove such limitations, specify other limitations, or initiate proceedings to revise these regulations.

(b) The following limitations establish the quantity or quality of pollutants or pollutant properties, controlled by this section, which may be discharged by a point source subject to the provisions of this subpart after application of the best practicable control technology currently available:

Effluent characteristic	Effluent limitations	
	Maximum for any 1 day	Average of daily values for 30 consecutive days shall not exceed—
	Metric units kg/Mwh	
TSS	0.319	0.160
Chromium total	.006	.003
Chromium VI	.0006	.0003
Manganese total	.064	.032
pH	Within the range 6.0 to 9.0	
	English units lb/Mwh	
TSS	0.703	0.352
Chromium total	.014	.007
Chromium VI	.0014	.0007
Manganese total	.141	.070
pH	Within the range 6.0 to 9.0	

§ 424.13 Effluent limitations guidelines representing the degree of effluent reduction attainable by the application of the best available technology economically achievable.

The following limitations establish the quantity or quality of pollutants or pollutant properties, controlled by this section, which may be discharged by a point source subject to the provisions of this subpart after application of the best available technology economically achievable:

Reproduced by special permission from the *Environmental Reporter* copyright ©1975 by The Bureau of National Affairs, Washington, D.C.

Effluent characteristic	Effluent limitations: Maximum for any 1 day	Effluent limitations: Average of daily values for 30 consecutive days shall not exceed—
	Metric units kg/Mwh	
TSS	0.024	0.012
Chromium total	.0008	.0004
Chromium VI	.00008	.00004
Manganese total	.008	.0039
pH	Within the range 6.0 to 9.0	
	English units lb/Mwh	
TSS	0.052	0.026
Chromium total	.0017	.0009
Chromium VI	.0002	.0001
Manganese total	.017	.0086
pH	Within the range 6.0 to 9.0	

§ 424.14 [Reserved]

§ 424.15 Standards of performance for new sources.

The following standards of performance establish the quantity or quality of pollutants or pollutant properties, controlled by this section, which may be discharged by a new source subject to the provisions of this subpart:

Effluent characteristic	Effluent limitations: Maximum for any 1 day	Effluent limitations: Average of daily values for 30 consecutive days shall not exceed—
	Metric units kg/Mwh	
TSS	0.024	0.012
Chromium total	.0008	.0004
Chromium VI	.00008	.00004
Manganese total	.008	.0039
pH	Within the range 6.0 to 9.0	
	English units lb/Mwh	
TSS	0.052	0.026
Chromium total	.0017	.0009
Chromium VI	.0002	.0001
Manganese total	.017	.0086
pH	Within the range 6.0 to 9.0	

§ 424.16 Pretreatment standards for new sources.

The pretreatment standards under section 307(c) of the Act for a source within the open electric furnaces with wet air pollution control devices subcategory, which is a user of a publicly owned treatment works (and which would be a new source subject to section 306 of the Act, if it were to discharge pollutants to the navigable waters), shall be the standard set forth in Part 128 of this chapter except that, for the purpose of this section, § 128.133 of this chapter shall be amended to read as follows:

In addition to the prohibitions set forth in 40 CFR 128.131, the pretreatment standard for incompatible pollutants introduced into a publicly owned treatment works shall be the standard of performance for new sources specified in 40 CFR 424.15; provided that, if the publicly owned treatment works which receives the pollutants is committed, in its NPDES permit, to remove a specified percentage of any incompatible pollutant, the pretreatment standard applicable to users of such treatment works shall, except in the case of standards providing for no discharge of pollutants, be correspondingly reduced in stringency for that pollutant.

Subpart B—Covered Electric Furnaces and Other Smelting Operations With Wet Air Pollution Control Devices Subcategory

§ 424.20 Applicability; description of the covered electric furnaces and other smelting operations with wet air pollution control devices subcategory.

The provisions of this subpart are applicable to discharges resulting from the smelting of ferroalloys in covered electric furnaces or other smelting operations, not elsewhere included in this part, with wet air pollution control devices. This subcategory includes those electric furnaces of such construction or configuration (known as covered, closed, sealed, semi-covered or semi-closed furnaces) that the furnace off-gases are not burned prior to collection and cleaning, and which off-gases are cleaned after collection in a wet air pollution control device such as a scrubber, 'wet' baghouse, etc. This subcategory also includes those nonelectric furnace smelting operations, such as exothermic (i.e., aluminothermic or silicothermic) smelting, ferromanganese refining, etc., where these are controlled for air pollution by wet air pollution control devices. This subcategory does not include noncontact cooling water or those furnaces which utilize dry dust collection techniques, such as dry baghouses.

§ 424.21 Specialized definitions.

For the purpose of this subpart:

(a) Except as provided below, the general definitions, abbreviations and methods of analysis set forth in Part 401 of this chapter shall apply to this subpart.

(b) The term "Mwh" shall mean megawatt hour(s) of electrical energy consumed in the smelting process (furnace power consumption).

§ 424.22 Effluent limitations guidelines representing the degree of effluent reduction attainable by the application of the best practicable control technology currently available.

(a) In establishing the limitations set forth in this section, EPA took into account all information it was able to collect, develop and solicit with respect to factors (such as age and size of plant, raw materials, manufacturing processes, products produced, treatment technology available, energy requirements and costs) which can affect the industry subcategorization and effluent levels established. It is, however, possible that data which would affect these limitations have not been available and, as a result, these limitations should be adjusted for certain plants in this industry. An individual discharger or other interested person may submit evidence to the Regional Administrator (or to the State, if the State has the authority to issue NPDES permits) that factors relating to the equipment or facilities involved, the process applied, or other such factors related to such discharger are fundamentally different from the factors considered in the establishment of the guidelines. On the basis of such evidence or other available information, the Regional Administrator (or the State) will make a written finding that such factors are or are not fundamentally different for that facility compared to those specified in the Development Document. If such fundamentally different factors are found to exist, the Regional Administrator or the State shall establish for the discharger effluent limitations in the NPDES permit either more or less stringent than the limitations established herein, to the extent dictated by such fundamentally different factors. Such limitations must be approved by the Administrator of the Environmental Protection Agency. The Administrator may approve or disapprove such limitations, specify other limitations, or initiate proceedings to revise these regulations.

(b) The following limitations establish the quantity or quality of pollutants or pollutant properties, controlled by this section, which may be discharged by a point source subject to the provisions of this subpart after application of the best practicable control technology currently available:

Effluent characteristic	Effluent limitations: Maximum for any 1 day	Effluent limitations: Average of daily values for 30 consecutive days shall not exceed—
	Metric units kg/Mwh	
TSS	0.419	0.209
Chromium total	.008	.004
Chromium VI	.0008	.0004
Manganese total	.084	.042
Cyanide total	.004	.002
Phenols	.008	.004
pH	Within the range 6.0 to 9.0	
	English units lb/Mwh	
TSS	0.922	0.461
Chromium total	.018	.009
Chromium VI	.0018	.0009
Manganese total	.184	.092
Cyanide total	.009	.005
Phenols	.013	.009
pH	Within the range 6.0 to 9.0	

Provided, however, That for nonelectric furnace smelting processes, the units of effluent limitations set forth in this section shall be read as "kg/kkg of product" rather than "kg/Mwh," and the limitations (except for pH) shall be 3.3 times those listed in the table in this section (or, for English units, "lb/ton of product" rather than "lb/Mwh," and the limitations (except for pH) shall be three times those listed in the table).

[39 FR 17841, May 21, 1974]

§ 424.23 Effluent limitations guidelines representing the degree of effluent reduction attainable by the application of the best available technology economically achievable.

The following limitations establish the quantity or quality of pollutants or pollutant properties, controlled by this section, which may be discharged by a point source subject to the provisions of this subpart after application of the best available technology economically achievable:

Effluent characteristic	Effluent limitations: Maximum for any 1 day	Effluent limitations: Average of daily values for 30 consecutive days shall not exceed—
	Metric units kg/Mwh	
TSS	0.032	0.016
Chromium total	.001	.0005
Chromium VI	.0001	.00005
Manganese total	.011	.005
Cyanide total	.0005	.0003
Phenols	.0004	.0002
pH	Within the range 6.0 to 9.0	
	English units lb/Mwh	
TSS	0.071	0.035
Chromium total	.002	.0012
Chromium VI	.0002	.0001
Manganese total	.023	.012
Cyanide total	.001	.0006
Phenols	.0009	.0005
pH	Within the range 6.0 to 9.0	

Provided, however, That for nonelectric furnace smelting processes, the units of effluent limitations set forth in this section shall be read as "kg/kkg of product" rather than "kg/Mwh," and the limitations (except for pH) shall be 3.3 times those listed in the table in this section (or, for English units, "lb/ton of product" rather than "lb/Mwh," and the limitations (except for pH) shall be three times those listed in the table).

[39 FR 17841, May 21, 1974]

§ 424.24 [Reserved]

§ 424.25 Standards of performance for new sources.

The following standards of performance establish the quantity or quality of pollutants or pollutant properties, controlled by this section, which may be discharged by a new source subject to the provisions of this subpart:

Effluent characteristic	Effluent limitations: Maximum for any 1 day	Effluent limitations: Average of daily values for 30 consecutive days shall not exceed—
	Metric units kg/Mwh	
TSS	0.032	0.016
Chromium total	.001	.0005
Chromium VI	.0001	.00005
Manganese total	.011	.005
Cyanide total	.0005	.0003
Phenols	.0004	.0002
pH	Within the range 6.0 to 9.0	
	English units lb/Mwh	
TSS	0.071	0.035
Chromium total	.002	.0012
Chromium VI	.0002	.0001
Manganese total	.023	.012
Cyanide total	.001	.0006
Phenols	.0009	.0005
pH	Within the range 6.0 to 9.0	

Provided, however, That for nonelectric furnace smelting processes, the units of effluent limitations set forth in this section shall be read as "kg/kkg of product" rather than "kg/Mwh," and the limitations (except for pH) shall be 3.3 times those listed in the table in this section (or, for English units, "lb/ton of product" rather than "lb/Mwh," and the limitations (except for pH) shall be three times those listed in the table).

[39 FR 17841, May 21, 1974]

§ 424.26 Pretreatment standards for new sources.

The pretreatment standards under section 307(c) of the Act for a source within the covered electric furnaces and other smelting operations with wet air pollution control devices subcategory, which is a user of a publicly owned treatment works (and which would be a new source subject to section 306 of the Act, if it were to discharge pollutants to the navigable waters), shall be the standard set forth in Part 128 of this chapter, except that, for the purpose of this section, § 128.133 of this chapter, shall be amended to read as follows:

In addition to the prohibitions set forth in 40 CFR 128.131, the pretreatment standard for incompatible pollutants introduced into a publicly owned treatment works shall be the standard of performance for new sources specified in 40 CFR 424.25; provided that, if the publicly owned treatment works which receives the pollutants is committed, in its NPDES permit, to remove a specified percentage of any incompatible pollutant, the pretreatment standard applicable to users of such treatment works shall, except in the case of standards providing for no discharge of pollutants, be correspondingly reduced in stringency for that pollutant.

Subpart C—Slag Processing Subcategory

§ 424.30 Applicability; description of the slag processing subcategory.

The provisions of this subpart are applicable to discharges resulting from slag processing, wherein (1) the residual metallic values in the furnace slag are recovered via concentration for return to the furnace, or (2) the slag is "shotted" for other further use.

§ 424.31 Specialized definitions.

For the purpose of this subpart:

(a) Except as provided below, the general definitions, abbreviations and methods of analysis set forth in Part 401 of this chapter shall apply to this subpart.

§ 424.32 Effluent limitations guidelines representing the degree of effluent reduction attainable by the application of the best practicable control technology currently available.

(a) In establishing the limitations set forth in this section, EPA took into account all information it was able to collect, develop and solicit with respect to factors (such as age and size of plant, raw materials, manufacturing processes, products produced, treatment technology available, energy requirements and costs) which can affect the industry subcategorization and effluent levels established. It is, however, possible that data which would affect these limitations have not been available and, as a result, these limitations should be adjusted for certain plants in this industry. An individual discharger or other interested person may submit evidence to the Regional Administrator (or to the State, if the State has the authority to issue NPDES permits) that factors relating to the equipment or facilities involved, the process applied, or other such factors related to such discharger are fundamentally different from the factors considered in the establishment of the guidelines. On the basis of such evidence or other available information, the Regional Administrator (or the State) will make a written finding that such factors are or are not fundamentally different for that facility compared to those specified in the Development Document. If such fundamentally different factors are found to exist, the Regional Administrator or the State shall establish for the discharger effluent limitations in the NPDES permit either more or less stringent than the limitations established herein, to the extent dictated by such fundamentally different factors. Such limitations must be approved by the Administrator of the Environmental Protection Agency. The Administrator may approve or disapprove such limitations, specify other limitations, or initiate proceedings to revise these regulations.

(b) The following limitations establish the quantity or quality of pollutants or pollutant properties, controlled by this section, which may be discharged by a point source subject to the provisions of this subpart after application of the best practicable control technology currently available:

Effluent characteristic	Effluent limitations: Maximum for any 1 day	Effluent limitations: Average of daily values for 30 consecutive days shall not exceed—
	Metric units kg/kkg processed	
TSS	2.659	1.330
Chromium total	.053	.026
Manganese total	.532	.266
pH	Within the range 6.0 to 9.0	
	English units lb/ton processed	
TSS	5.319	2.659
Chromium total	.106	.053
Manganese total	1.064	.532
pH	Within the range 6.0 to 9.0	

§ 424.33 Effluent limitations guidelines representing the degree of effluent reduction attainable by the application of the best available technology economically achievable.

The following limitations establish the quantity or quality of pollutants or pollutant properties, controlled by this section, which may be discharged by a point source subject to the provisions of this subpart after application of the best available technology economically achievable:

Effluent characteristic	Effluent limitations: Maximum for any 1 day	Effluent limitations: Average of daily values for 30 consecutive days shall not exceed—
	Metric units kg/kkg processed	
TSS	0.271	0.136
Chromium total	.0054	.0027
Manganese total	.054	.027
pH	Within the range 6.0 to 9.0	
	English units lb/ton processed	
TSS	0.542	0.271
Chromium total	.011	.0054
Manganese total	.108	.054
pH	Within the range 6.0 to 9.0	

§ 424.34 [Reserved]

§ 424.35 Standards of performance for new sources.

The following standards of performance establish the quantity or quality of pollutants or pollutant properties, controlled by this section, which may be discharged by a new source subject to the provisions of this subpart:

Effluent characteristic	Effluent limitations: Maximum for any 1 day	Effluent limitations: Average of daily values for 30 consecutive days shall not exceed—
	Metric units kg/kkg processed	
TSS	0.271	0.136
Chromium total	.0064	.0027
Manganese total	.054	.027
pH	Within the range 6.0 to 9.0	
	English units lb/ton processed	
TSS	0.542	0.271
Chromium total	.011	.0054
Manganese total	.108	.054
pH	Within the range 6.0 to 9.0	

§ 424.36 Pretreatment standards for new sources.

The pretreatment standards under section 307(c) of the Act for a source within the slag processing subcategory, which is a user of a publicly owned treatment works (and which would be a new source subject to section 306 of the Act, if it were to discharge pollutants to the navigable waters), shall be the standard set forth in Part 128 of this chapter, except that, for the purpose of this section, § 128.133 of this chapter, shall be amended to read as follows:

In addition to the prohibitions set forth in 40 CFR 128.131, the pretreatment standard for incompatible pollutants introduced into a publicly owned treatment works shall be the standard of performance for new sources specified in 40 CFR 424.35; provided that, if the publicly owned treatment works which receives the pollutants is committed, in its NPDES permit, to remove a specified percentage of any incompatible pollutant, the pretreatment standard applicable to users of such treatment works shall, except in the case of standards providing for no discharge of pollutants, be correspondingly reduced in stringency for that pollutant.

Subpart D—Covered Calcium Carbide Furnaces With Wet Air Pollution Control Devices Subcategory

[40 FR 8030, February 24, 1975]

§ 424.40 Applicability; description of the covered calcium carbide furnaces with wet air pollution control devices subcategory.

The provisions of this subpart are applicable to discharges resulting from the production of calcium carbide in covered electric furnaces which use wet air pollution control devices. This subcategory includes those electric furnaces of such construction or configuration (known as covered, closed, sealed, semi-covered or semi-closed furnaces) that the furnace off-gases are not burned prior to collection and cleaning, and which off-gases are cleaned after collection in a wet air pollution control device such as a scrubber, 'wet' baghouse, etc. This subcategory does not include noncontact cooling water or those furnaces which utilize dry dust collection techniques, such as dry baghouses.

§ 424.41 Specialized definitions.

For the purpose of this subpart:

(a) Except as provided below, the general definitions, abbreviations and methods of analysis set forth in 40 CFR Part 401 shall apply to this subpart.

§ 424.42 Effluent limitations guidelines representing the degree of effluent reduction attainable by the application of the best practicable control technology currently available.

In establishing the limitations set forth in this section, EPA took into account all information it was able to collect, develop and solicit with respect to factors (such as age and size of plant, raw materials, manufacturing processes, products produced, treatment technology available, energy requirements and costs) which can affect the industry subcategorization and effluent levels established. It is, however, possible that data which would affect these limitations have not been available and, as a result, these limitations should be adjusted for certain plants in this industry. An individual discharger or other interested person may submit evidence to the Regional Administrator (or to the State, if the State has the authority to issue NPDES permits) that factors relating to the equipment or facilities involved, the process applied, or other such factors related to such discharger are fundamentally different from the factors considered in the establishment of the guidelines. On the basis of such evidence or other available information, the Regional Administrator (or the State) will make a written finding that such factors are or are not fundamentally different for that facility compared to those specified in the Development Document. If such fundamentally different factors are found to exist, the Regional Administrator or the State shall establish for the discharger effluent limitations in the NPDES permit either more or less stringent than the limitations established herein, to the extent dictated by such fundamentally different factors. Such limitations must be approved by the Administrator of the Environmental Protection Agency. The Administrator may approve or disapprove such limitations, specify other limitations, or initiate proceedings to revise these regulations. The following limitations establish the quantity or quality of pollutants or pollutant properties, controlled by this section, which may be discharged by a point source subject to the provisions of this subpart after application of the best practicable control technology currently available:

Effluent characteristic	Effluent limitations: Maximum for any one day	Effluent limitations: Average of daily values for thirty consecutive days shall not exceed—
	(Metric units) kg/kkg of product	
TSS	0.380	0.190
Total Cyanide	0.0056	0.0028
pH	Within the range 6.0 to 9.0.	
	(English units) lb/1000 lb of product	
TSS	0.380	0.190
Total Cyanide	0.0056	0.0028
pH	Within the range 6.0 to 9.0.	

§ 424.43 Effluent limitations guidelines representing the degree of effluent reduction attainable by the application of the best available technology economically achievable.

The following limitations establish the quantity or quality of pollutants or pollutant properties, controlled by this section, which may be discharged by a point source subject to the provisions of this subpart after application of the best available technology economically achievable:

Effluent characteristic	Effluent limitations: Maximum for any one day	Effluent limitations: Average of daily values for thirty consecutive days shall not exceed—
	(Metric units) kg/kkg of product	
TSS	0.22	0.11
Total Cyanide	0.0056	0.0028
pH	Within the range 6.0 to 9.0.	
	(English units) lb/1000 lb of product	
TSS	0.22	0.11
Total Cyanide	0.0056	0.0028
pH	Within the range 6.0 to 9.0.	

Subpart E—Other Calcium Carbide Furnaces Subcategory

[40 FR 8030, February 24, 1975]

§ 424.50 Applicability; description of the other calcium carbide furnaces subcategory.

The provisions of this subpart are applicable to discharges resulting from the production of calcium carbide in those covered furnaces which do not utilize wet air pollution control methods. Covered calcium carbide furnaces using wet air pollution control devices are regulated in Subpart D. Open (uncovered) calcium carbide furnaces are regulated in Part 415, inorganic chemicals manufacturing point source category (39 FR 9612).

§ 424.51 Specialized definitions.

For the purpose of this subpart:

(a) Except as provided below, the general definitions, abbreviations and methods of analysis set forth in 40 CFR Part 401 shall apply to this subpart.

§ 424.52 Effluent limitations guidelines representing the degree of effluent reduction attainable by the application of the best practicable control technology currently available.

In establishing the limitations set forth in this section, EPA took into account all information it was able to collect, develop and solicit with respect to factors (such as age and size of plant, raw materials, manufacturing processes, products produced, treatment technology available, energy requirements and costs) which can affect the industry subcategorization and effluent levels established. It is, however, possible that data which would affect these limitations have not been available and, as a result, these limitations should be adjusted for certain plants in this industry. An individual discharger or other interested person may submit evidence to the Regional Administrator (or to the State, if the State has the authority to issue NPDES permits) that factors relating to the equipment or facilities involved, the process applied, or other such factors related to such discharger are fundamentally different from the factors considered in the establishment of the guidelines. On the basis of such evidence or other available information, the Regional Administrator (or the State) will make a written finding that such factors are or are not fundamentally different for that facility compared to those specified in the Development Document. If such fundamentally different factors are found to exist, the Regional Administrator or the State shall establish for the discharger effluent limitations in the NPDES permit either more or less stringent than the limitations established herein, to the extent dictated by such fundamentally different factors. Such limitations must be approved by the Administrator of the Environmental Protection Agency. The Administrator may approve or disapprove such limitations, specify other limitations, or initiate proceedings to revise these regulations. The following limitations establish the quantity or quality of pollutants or pollutant properties, controlled by this section, which may be discharged by a point source subject to the provisions of this subpart after application of the best practicable control technology currently available: there shall be no discharge of process waste water pollutants to navigable waters.

§ 424.53 Effluent limitations guidelines representing the degree of effluent reduction attainable by the application of the best available technology economically achievable.

The following limitations establish the quantity or quality of pollutants or pollutant properties, controlled by this section, which may be discharged by a point source subject to the provisions of the best available technology economically achievable: there shall be no discharge of process waste water pollutants to navigable waters.

Subpart F—Electrolytic Manganese Products Subcategory

[40 FR 8030, February 24, 1975]

§ 424.60 Applicability; description of the electrolytic manganese products subcategory.

The provisions of this subpart are applicable to discharges resulting from the manufacture of electrolytic manganese products such as electrolytic manganese metal or electrolytic manganese dioxide.

§ 424.61 Specialized definitions.

For the purpose of this subpart:

(a) Except as provided below, the general definitions, abbreviations and methods of analysis set forth in 40 CFR Part 401 shall apply to this subpart.

§ 424.62 Effluent limitations guidelines representing the degree of effluent reduction attainable by the application of the best practicable control technology currently available.

In establishing the limitations set forth in this section, EPA took into account all information it was able to collect, develop and solicit with respect to factors (such as age and size of plant, raw materials, manufacturing processes, products produced, treatment technology available, energy requirements and costs) which can affect the industry subcategorization and effluent levels established. It is, however, possible that data which would affect these limitations have not been available and, as a result, these limitations should be adjusted for certain plants in this industry. An individual discharger or other interested person may submit evidence to the Regional Administrator (or to the State, if the State has the authority to issue NPDES permits) that factors relating to the equipment or facilities involved, the process applied, or other such factors related to such discharger are fundamentally different from the factors considered in the establishment of the guidelines. On the basis of such evidence or other available information, the Regional Administrator (or the State) will make a written finding that such factors are or are not fundamentally different for that facility compared to those specified in the Development Document. If such fundamentally different factors are found to exist, the Regional Administrator or the State shall establish for the discharger effluent limitations in the NPDES permit either more or less stringent than the limitations established herein, to the extent dictated by such fundamentally different factors. Such limitations must be approved by the Administrator of the Environmental Protection Agency. The Administrator may approve or disapprove such limitations, specify other limitations, or initiate proceedings to revise these regulations.

(a) The following limitations establish the quantity or quality of pollutants or pollutant properties, controlled by this section, which may be discharged by a point source subject to the provisions of this subpart producing electrolytic manganese after application of the best practicable control technology currently available:

Effluent characteristic	Effluent limitations: Maximum for any one day	Effluent limitations: Average of daily values for thirty consecutive days shall not exceed—
(Metric units) kg/kkg of product		
TSS	6.778	3.389
Manganese	2.771	1.356
Ammonia-N	40.667	20.334
pH	Within the range 6.0 to 9.0.	
(English units) lb/1000 lb of product		
TSS	6.778	3.389
Manganese	2.771	1.356
Ammonia-N	40.667	20.334
pH	Within the range 6.0 to 9.0.	

(b) The following limitations establish the quantity or quality of pollutants or pollutant properties, controlled by this section, which may be discharged by a point source subject to the provisions of this subpart producing electrolytic manganese dioxide after application of the best practicable control technology currently available:

Effluent characteristic	Effluent limitations: Maximum for any one day	Effluent limitations: Average of daily values for thirty consecutive days shall not exceed—
(Metric units) kg/kkg of product		
TSS	1.762	0.881
Manganese	0.705	0.352
Ammonia-N	10.574	5.287
pH	Within the range 6.0 to 9.0.	
(English units) lb/1000 lb of product		
TSS	1.762	0.881
Manganese	0.705	0.352
Ammonia-N	10.574	5.287
pH	Within the range 6.0 to 9.0.	

§ 424.63 Effluent limitations guidelines representing the degree of effluent reduction attainable by the application of the best available technology economically achievable.

(a) The following limitations establish the quantity or quality of pollutants or pollutant properties, controlled by this section, which may be discharged by a point source subject to the provisions of this subpart producing electrolytic manganese after application of the best available technology economically achievable:

Effluent characteristic	Effluent limitations: Maximum for any one day	Effluent limitations: Average of daily values for thirty consecutive days shall not exceed—
(Metric units) kg/kkg of product		
TSS	3.389	1.695
Manganese	0.678	0.339
Ammonia-N	6.778	3.389
pH	Within the range 6.0 to 9.0.	
(English units) lb/1000 lb of product		
TSS	3.389	1.695
Manganese	0.678	0.339
Ammonia-N	6.778	3.389
pH	Within the range 6.0 to 9.0.	

(b) The following limitations establish the quantity or quality of pollutants or pollutant properties, controlled by this section, which may be discharged by a point source subject to the provisions of this subpart producing electrolytic manganese dioxide after application of the best available technology economically achievable:

Effluent characteristic	Effluent limitations: Maximum for any one day	Effluent limitations: Average of daily values for thirty consecutive days shall not exceed
(Metric units) kg/kkg of product		
TSS	0.881	0.441
Manganese	0.176	0.088
Ammonia-N	1.762	0.881
pH	Within the range 6.0 to 9.0.	
(English units) lb/1000 lb of product		
TSS	0.881	0.441
Manganese	0.176	0.088
Ammonia-N	1.762	0.881
pH	Within the range 6.0 to 9.0.	

Subpart G—Electrolytic Chromium Subcategory

[40 FR 8030, February 24, 1975]

§ 424.70 Applicability; description of the electrolytic chromium subcategory.

The provisions of this subpart are applicable to discharges resulting from the manufacture of chromium metal by the electrolytic process. They are not applicable to discharges resulting from the manufacture of chromium metal by aluminothermic or other methods.

§ 424.71 Specialized definitions.

For the purpose of this subpart:

(a) Except as provided below, the general definitions, abbreviations and methods of analysis set forth in 40 CFR Part 401 shall apply to this subpart.

§ 424.72 Effluent limitations guidelines representing the degree of effluent reduction attainable by the application of the best practicable control technology currently available.

In establishing the limitations set forth in this section, EPA took into account all information it was able to collect, develop and solicit with respect to factors (such as age and size of plant, raw materials, manufacturing processes, products produced, treatment technology available, energy requirements and costs) which can affect the industry subcategorization and effluent levels established. It is, however, possible that data which would affect these limitations have not been available and, as a result, these limitations should be adjusted for certain plants in this industry. An individual discharger or other interested person may submit evidence to the Regional Administrator (or to the State, if the State has the authority to issue NPDES permits) that factors relating to the equipment or facilities involved, the process applied, or other such factors related to such discharger are fundamentally different from the factors considered in the establishment of the guidelines. On the basis of such evidence or other available information, the Regional Administrator (or the State) will make a written finding that such factors are or are not fundamentally different for that facility compared to those specified in the Development Document. If such fundamentally different factors are found to exist, the Regional Administrator or the State shall establish for the discharger effluent limitations in the NPDES permit either more or less stringent than the limitations established herein, to the extent dictated by such fundamentally different factors. Such limitations must be approved by the Administrator of the Environmental Protection Agency. The Administrator may approve or disapprove such limitations, specify other limitations, or initiate proceedings to revise these regulations. The following limitations establish the quantity or quality of pollutants or pollutant properties, controlled by this section, which may be discharged by a point source subject to the provisions of this subpart after application of the best practicable control technology currently available:

Effluent characteristic	Effluent limitations: Maximum for any one day	Effluent limitations: Average of daily values for thirty consecutive days shall not exceed—
(Metric units) kg/kkg of product		
TSS	5.276	2.638
Manganese	2.111	1.055
Chromium	0.106	0.053
Ammonia-N	10.553	5.276
pH	Within the range of 6.0 to 9.0.	
(English units) lb/1000 lb of product		
TSS	5.276	2.638
Manganese	2.111	1.055
Chromium	0.106	0.053
Ammonia-N	10.553	5.276
pH	Within the range 6.0 to 9.0.	

§ 424.73 Effluent limitations guidelines representing the degree of effluent reduction attainable by the application of the best available technology economically achievable.

The following limitations establish the quantity or quality of pollutants or pollutant properties, controlled by this section, which may be discharged by a point source subject to the provisions of this subpart after application of the best available technology economically achievable:

Effluent characteristic	Effluent limitations: Maximum for any one day	Effluent limitations: Average of daily values for thirty consecutive days shall not exceed—
(Metric units) kg/kkg of product		
TSS	2.649	1.324
Manganese	0.530	0.265
Chromium	0.053	0.027
Ammonia-N	5.297	2.649
pH	Within the range 6.0 to 9.0.	
(English units) lb/1000 lb of product		
TSS	2.649	1.324
Manganese	0.530	0.265
Chromium	0.053	0.027
Ammonia-N	5.297	2.649
pH	Within the range 6.0 to 9.0.	

excreta, and secretions obtained from patients or laboratory animals) and disposable fomites (any substance that may harbor or transmit pathogenic organisms) attendant thereto; (3) surgical operating room pathologic specimens and disposable fomites attendant thereto and similar disposable materials from outpatient areas and emergency rooms.

(q) "Municipal solid wastes" means normally, residential and commercial solid wastes generated within a community.

(r) "Open burning" means burning of solid wastes in the open, such as in an open dump.

(s) "Open dump" means a land disposal site at which solid wastes are disposed of in a manner that does not protect the environment, are susceptible to open burning, and are exposed to the elements, vectors, and scavengers.

(t) "Plans" means reports and drawings, including a narrative operating description, prepared to describe the facility and its proposed operation.

(u) "Residue" means all the solids that remain after completion of thermal processing, including bottom ash, fly ash, and grate siftings.

(v) "Responsible agency" means the organizational element that has the legal duty to ensure that owners, operators, or users of facilities comply with these guidelines.

(w) "Sanitary Landfill" means a land disposal site employing an engineered method of disposing of solid wastes on land in a manner that minimizes environmental hazards by spreading the solid wastes in thin layers, compacting the solid wastes to the smallest practical volume, and applying and compacting cover material at the end of each operating day.

(x) "Sludge" means the accumulated semiliquid suspension of settled solids deposited from wastewaters or other fluids in tanks or basins. It does not include solids or dissolved material in domestic sewage or other significant pollutants in water resources, such as silt, dissolved or suspended solids in industrial wastewater effluents, dissolved materials in irrigation return flows or other common water pollutants.

(y) "Solid wastes" means garbage, refuse, sludges, and other discarded solid materials resulting from industrial and commercial operations and from community activities. It does not include solids or dissolved material in domestic sewage or other significant pollutants in water resources, such as silt, dissolved or suspended solids in industrial wastewater effluents, dissolved materials in irrigation return flows or other common water pollutants.

(z) "Special wastes" means nonhazardous solid wastes requiring handling other than that normally used for municipal solid waste.

(aa) "Thermal processing" means processing of waste material by means of heat.

(bb) "Vector" means a carrier, usually an arthropod, that is capable of transmitting a pathogen from one organism to another.

Subpart B—Requirements and Recommended Procedures

§ 240.200 Solid wastes accepted.

§ 240.200–1 Requirement.

In consultation with the responsible agencies, the owner/operator shall determine what wastes shall be accepted and shall identify any special handling required. In general, only wastes for which the facility has been specifically designed shall be accepted; however, other wastes may be accepted if it has been demonstrated to the responsible agency that they can be satisfactorily processed within the design capability of the facility or after appropriate facility modifications.

§ 240.200–2 Recommended procedures: Design.

(a) In addition to the residential and commercial wastes normally processed at municipal-scale incinerators, certain special wastes might be considered for processing. These include: Certain bulky wastes (e.g., combustible demolition and construction debris, tree stumps, large timbers, furniture, and major appliances), digested and dewatered sludges from waste water treatment facilities, raw sewage sludges, and septic tank pumpings.

(b) If the facility is designed to handle special wastes, special areas should be provided where appropriate for storage while they await processing.

§ 240.200–3 Recommended procedures: Operations.

(a) Storage areas for special wastes should be clearly marked.

(b) Facility personnel should be thoroughly trained in any unusual handling required by acceptance of Special Wastes.

§ 240.201 Solid wastes excluded.

§ 240.201–1 Requirement.

Using information provided to them by the waste generator/owner, the responsible agency and the facility owner/operator shall jointly determine specific wastes to be excluded and shall identify them in the plans. The generator/owner of excluded wastes shall consult with the responsible agency in determining an alternative method of disposal for excluded wastes. The criteria used in considering whether a waste is unacceptable shall include the facility's capabilities, alternative methods available, the chemical and biological characteristics of the waste, environmental and health effects, and the safety of personnel. Disposal of pesticides and pesticide containers shall be consistent with the Federal Environmental Pesticides Control Act of 1972 (Pub. L. 92–516) and recommended procedures promulgated thereunder.

§ 240.201–2 Recommended procedures: Design.

(a) Provision for storing, handling, and removing hazardous or excluded wastes inadvertently left at the facility should be considered in design.

(b) Examples of wastes which should be considered for exclusion from the facility include: Hazardous wastes, very large carcasses, automobile bodies, dewatered sludges from water treatment plants, and industrial process wastes.

§ 240.201–3 Recommended procedures: Operations.

(a) Regular users of the facility should be given a list of excluded materials. The list should also be displayed prominently at the facility entrance. If a regular user persists in making unacceptable deliveries, he should be barred from the installation and reported to the responsible agency.

(b) The operating plan should specify the procedures and precautions to be taken if unacceptable wastes are delivered to the facility or are improperly left there. Operating personnel should be thoroughly trained in such procedures.

§ 240.202 Site selection.

§ 240.202–1 Requirement.

Site selection and utilization shall be consistent with public health and welfare, and air and water quality standards and adaptable to appropriate land-use plans.

§ 240.202–2 Recommended procedures: Design.

(a) Whenever possible, thermal processing facilities should be located in areas zoned for industrial use and having adequate utilities to serve the facility.

(b) The site should be accessible by permanent roads leading from the public road system.

(c) Environmental factors, climatological conditions, and socioeconomic factors should be given full consideration as selection criteria.

§ 240.202–3 Recommended procedures: Operations.

Not applicable.

§ 240.203 General design.

§ 240.203–1 Requirement.

A plan for the design of new facilities or modifications to existing facilities shall be prepared or approved by a professional engineer. A list of major considerations and the rationale for the decision on each consideration shall be approved by the responsible agency prior to authorization for construction. This information shall remain available for review.

§ 240.203–2 Recommended procedures: Design.

(a) The types, amounts (by weight and volume), and characteristics of all solid wastes expected to be processed should be determined by survey and analysis. The gross calorific value of the solid wastes to be processed should be determined to serve as a basis for design.

(b) Resource recovery in the form of heat utilization or direct recovery of materials should be considered in the design.

(c) The facility should be designed to be compatible with the surrounding area, easy to maintain, and consistent with the land use of the area.

(d) Employee convenience facilities

and plant maintenance facilities should be provided. Adequate lighting should be provided throughout the facility.

(e) The corrosive and erosive action of once-through and recirculated process waters should be controlled either by treating them or by using materials capable of withstanding the adverse effects of the waters.

(f) Facility design capacity should consider such items as waste quantity and characteristics, variations in waste generation, equipment downtime, and availability of alternate storage, processing, or disposal capability.

(g) Facility systems and subsystems should be designed to assure standby capability in the event of breakdown. Provision for standby water and power should also be considered.

(h) Instrumentation should be provided to determine such factors as: The weight of incoming and outgoing materials (the same scale system may be used for both); total combustion airflow rates; underfire and overnre airflows and the quantitative distribution of each; selected temperatures and pressures in the furnace, along gas passages, in the particluate collection device, and in the stack; electrical power and water consumption of critical units; and rate of operation. The smoke density, the concentration of carbon monoxide, or the concentration of hydrocarbons in the stack gases should be monitored. Measurement of the pH should be considered for effluent waters. Continuously recording instrumentation should be used as much as possible.

(i) Audible signals should be provided to alert operating personnel of critical operating unit malfunctions.

(j) Sampling capability should be designed into the facility so that each process stream can be sampled, and the utilities required to do so should be close at hand. The sampling sites should be so designed that personnel can sample safely without interfering with normal plant operations.

(k) A laboratory should be included in the design, or provision should be made for laboratory analyses to be performed by an outside source acceptable to the responsible agency.

§ 240.203–3 Recommended procedures: Operations.

Not applicable.

§ 240.204 Water quality.

§ 240.204–1 Requirement.

All waters discharged from the facility shall be sufficiently treated to meet the most stringent of applicable water quality standards, established in accordance with or effective under the provisions of the Federal Water Pollution Control Act, as amended.

§ 240.204–2 Recommended procedures: Design.

(a) Effluent waters should not be discharged indiscriminately. Consideration should be given to onsite treatment of process and waste waters before discharge.

(b) Recirculation of process waters should be considered.

§ 240.204–3 Recommended procedures: Operations.

(a) When monitoring instrumentation indicates excessive discharge contamination, appropriate adjustments should be made to lower the concentrations to acceptable levels.

(b) In the event of an accidental spill, the local regulatory agency should be notified immediately.

§ 240.205 Air quality.

§ 240.205–1 Requirement.

Emissions shall not exceed applicable existing emission standards established by the U.S. Environmental Protection Agency (as published in Parts 52, 60, 61 and 76 of this chapter) under the authority of the Clean Air Act, as amended, or State or local emission standards effective under that Act, if the latter are more stringent.

§ 240.205–2 Recommended procedures: Design.

(a) These requirements should be met by using appropriate air pollution control technology.

(b) All emissions, including dust from vents, should be controlled.

§ 240.205–3 Recommended procedures: Operations.

When monitoring instrumentation indicates excessive emissions, appropriate adjustments should be made to lower the emission to acceptable levels.

§ 240.206 Vectors.

§ 240.206–1 Requirement.

Conditions shall be maintained that are unfavorable for the harboring, feeding, and breeding of vectors.

§ 240.206–2 Recommended procedures: Design.

Thermal processing facilities should be designed for ease of cleaning. Areas favorable for breeding of vectors should be avoided.

§ 240.206–3 Recommended procedures: Operations.

(a) A housekeeping schedule should be established and maintained. As a minimum the schedule should provide for cleaning the tipping and residue areas as spillages occur, emptying the solid waste storage area at least weekly, and routinely cleaning the remainder of the facility.

(b) Solid waste and residue should not be allowed to accumulate at the facility for more than one week.

§ 240.207 Aesthetics.

§ 240.207–1 Requirement.

The incinerator facility shall be designed and operated at all times in an aesthetically acceptable manner.

§ 240.207–2 Recommended procedures: Design.

The facility should be designed so that it is physically attractive. The tipping, residue discharge, and waste salvage areas should be screened from public view, and the grounds should be landscaped.

§ 240.207–3 Recommended procedures: Operations.

(a) A routine housekeeping and litter removal schedule should be established and implemented so that the facility regularly presents a neat and clean appearance.

(b) Solid wastes that cannot be processed by the facility should be removed from the facility at least weekly. Open burning or open dumping of this material should be prohibited.

§ 240.208 Residue.

§ 240.208–1 Requirement.

Residue and other solid waste products resulting from a thermal process shall be disposed of in an environmentally acceptable manner. Where land disposal is employed, practices must be in conformance with the U.S. Environmental Protection Agency's Guidelines for the Land Disposal of Solid Wastes. Unwanted residue materials remaining after the recovery operation shall be disposed of in a manner which protects the environment. Where land disposal is employed, practices must be in conformance with the U.S. Environmental Protection Agency's Guidelines for the Land Disposal of Solid Wastes.

§ 240.208–2 Recommended procedures: Design.

Thermal processing facilities should be so designed as to allow for removal from the site of residue or other solids in a manner that protects the environment.

§ 240.208–3 Recommended procedures: Operations.

(a) The furnace operator should visually observe the quality of the bottom ash at least twice per shift and record in the operating log the estimated percentage of unburned combustibles.

(b) If residue or fly ash is collected in a wet condition, it should be drained of free moisture. Transportation of residue and fly ash should be by means that prevent the loads from sifting, falling, leaking, or blowing from the container.

§ 240.209 Safety.

§ 240.209–1 Requirement.

Incinerators shall be designed, operated, and maintained in a manner to protect the health and safety of personnel associated with the operation of the facility. Pertinent provisions of the Occupational Safety and Health Act of 1970 (Pub. L. 91–596) and regulations promulgated thereunder shall apply.

§ 240.209–2 Recommended procedures: Design.

(a) Attention should be given to the safety of operators and vehicles through the provision of safety devices.

(b) Fire control equipment should be provided.

(c) Methods and/or equipment for removal of an injured person from the storage pit should be available.

§ 240.209–3 Recommended procedures: Operations.

(a) Detailed procedures should be developed for operation during such emer-

gency situations as power failure, air or water supply failure, equipment breakdowns, and fire. These procedures should be posted in prominent locations, implemented by the staff as required, and upgraded and revised periodically.

(b) Approved respirators or self-contained breathing apparatus should be available at convenient locations. Their use should be reviewed periodically with facility personnel. Information on this type equipment can be obtained from the Appalachian Laboratory for Occupational Respiratory Disease, National Institute for Occupational Safety and Health, Morgantown, West Virginia.

(c) Training in first aid practices and emergency procedures should be given all personnel.

(d) Personal safety devices such as hard hats, gloves, safety glasses, and footwear should be provided for facility employees.

(e) If a regular user or employee persistently poses a safety hazard he should be barred from the facility and reported to the responsible agency.

§ 240.210 General operations.

§ 240.210–1 Requirement.

The thermal processing facility shall be operated and maintained in a manner that assures it will meet the design requirements. An operations manual describing the various tasks to be performed, operating procedures, and safety precautions for various areas of the facility shall be developed and shall be readily available for reference by plant personnel.

§ 240.210–2 Recommended procedures: Design.

Not applicable.

§ 240.210–3 Recommended procedures: Operations.

(a) The facility supervisor should be experienced in the operation of the type of facility designed or, in the case of an innovated design, be adequately trained by responsible personnel in the operation of the facility.

(b) Alternate and standby disposal and operating procedures should be established for implementation during emergencies, air pollution episodes, and shutdown periods.

(c) Upon completion of facility construction, provision should be made for instruction of the staff in proper operation and maintenance procedures.

(d) A routine maintenance schedule should be established and followed.

(e) As-built engineering drawings of the facility should be provided at the conclusion of construction of the facility. These should be updated to show modifications by the owner as changes are made and should be readily available. A schematic showing the relationships of the various subsystems should also be available.

(f) Key operational procedures should be prominently posted.

(g) Equipment manuals, catalogs, spare parts lists, and spare parts should be readily available at the facility.

(h) Training opportunities for facility operating personnel should be provided.

§ 240.211 Records.

§ 240.211–1 Requirement.

The owner/operator of the thermal processing facility shall provide records and monitoring data as required by the responsible agency.

§ 240.211–2 Recommended procedures: Design.

Continuously recording instrumentation should be used as much as possible.

§ 240.211–3 Recommended procedures: Operations.

(a) Extensive monitoring and recordkeeping should be practiced during the first 12 to 18 months of operation of a new or renovated facility, during periods of high air pollution, and during periods of upset conditions at the facility.

(b) During other periods of more normal operation of the facility, less extensive monitoring and record keeping may be practiced if approved by the responsible agency.

(c) Operating records should be kept in a daily log and should include as a minimum:

(1) The total weight and volume (truck capacities may be used for volume determination) of solid waste received during each shift, including the number of loads received, the ownership or specific identity of delivery vehicles, the source and nature of the solid wastes accepted.

(2) Furnace and combustion chamber temperatures recorded at least every 60 minutes and as changes are made, including explanations for prolonged, abnormally high and low temperatures.

(3) Rate of operation, such as grate speed.

(4) Overfire and underfire air volumes and pressure and distribution recorded at least every 60 minutes and as changes are made.

(5) Weights of bottom ash, grate siftings, and fly ash, individually or combined, recorded at intervals appropriate to normal facility operation.

(6) Estimated percentages of unburned material in the bottom ash.

(7) Water used on each shift for bottom ash quenching and scrubber operation. Representative samples of process waters should be collected and analyzed as recommended by the responsible agency.

(8) Power produced and utilized each shift. If steam is produced, quality, production totals and consumption rates should be recorded.

(9) Auxiliary fuel used each shift.

(10) Gross calorific value of daily representative samples of bottom ash, grate siftings, and fly ash. (Sampling time should be varied so that all shifts are monitored on a weekly basis.)

(11) Emission measurements and laboratory analyses required by the responsible agency.

(12) Complete records of monitoring instruments.

(13) Problems encountered and methods of solution.

(d) An annual report should be prepared which includes at least the following information:

(1) Minimum, average, and maximum daily volume and weight of waste received and processed, summarized on a monthly basis.

(2) A summary of the laboratory analyses including at least monthly averages.

(3) Number and qualifications of personnel in each job category; total manhours per week; number of State certified or licensed personnel; staffing deficiencies; and serious injuries, their cause and preventive measures instituted.

(4) An identification and brief discussion of major operational problems and solutions.

(5) Adequacy of operation and performance with regard to environmental requirements, the general level of housekeeping and maintenance, testing and reporting proficiency, and recommendations for corrective actions.

(6) A copy of all significant correspondence, reports, inspection reports, and any other communications from enforcement agencies.

(e) Methodology for evaluating the facility's performance should be developed. Evaluation procedures recommended by the U.S. Environmental Protection Agency should be used whenever possible (see bibliography).

APPENDIX—RECOMMENDED BIBLIOGRAPHY

1. The Solid Waste Disposal Act as amended; Title II of Public Law 89–272, 89th Cong., S. 306, Oct. 20, 1965; Pub. L. 91–512, 91st Cong., H.R. 11833, Oct. 26, 1970. Washington, U.S. Government Printing Office, 1971. 14 p. Reprinted 1972.

2. Seven incinerators; evaluation, discussions, and authors' closure. [Washington, U.S. Environmental Protection Agency, 1971. 40 p.] (Includes discussions and authors' closure for "An evaluation of seven incinerators" by W. C. Achinger and L. E. Daniels.)

3. DeMarco, J., D. J. Keller, J. Leckman, and J. L. Newton. Municipal-scale incinerator design and operation. Public Health Service Publication No. 2012. Washington, U.S. Government Printing Office, 1973. 98 p.

4. Occupational Safety and Health Act of 1970; Pub. L. 91–596, 91st Cong., S. 2193, Dec. 29, 1970. Washington, U.S. Government Printing Office, 1972.

5. Control techniques for particulate air pollutants. Publication AP–51. U.S. Department of Health, Education, and Welfare, National Air Pollution Control Administration, 1969.

6. Zausner, E. R. An accounting system for incinerator operations. Public Health Service Publication No. 2032. Washington, U.S. Government Printing Office, 1970. 17 p.

7. Achinger, W. C., and J. J. Giar, Testing manual for solid waste incinerators. [Cincinnati], U.S. Environmental Protection Agency, 1973. [372 p., loose-leaf.] [Open-file report, restricted distribution.]

8. Nader, J. S., W. Carter, and F. Jaye. Performance Specifications for Stationary Source Monitoring Systems. NTIS PB. 230 934/AS (1974).

PART 241—GUIDELINES FOR THE LAND DISPOSAL OF SOLID WASTES

AUTHORITY: Sec. 209(a) of the Solid Waste Disposal Act of 1965 (Pub. L. 89–272) as amended by the Resource Recovery Act of 1970 (Pub. L. 91–512).

Subpart A—General Provisions

§ 241.100 Scope.

(a) The guidelines are generally ap-

plicable to the land disposal of all solid waste materials. However, the guidelines do not apply to hazardous, agricultural, and mining wastes because of the lack of sufficient information upon which to base recommended procedures. Concerning the specific practice of land disposal of milled solid wastes, EPA guidance is contained in a position statement issued in November 1972.

(b) The requirement sections contained herein delineate minimum levels of performance required of any solid waste land disposal site operation. The recommended procedures sections are presented to suggest preferred methods by which the objectives of the requirements can be realized.[1] The recommended procedures are based on the practice of sanitary landfilling municipal solid waste: Normally, residential, and commercial solid waste generated within a community. Sanitary landfilling is the most widely applied environmentally acceptable land disposal method. If techniques other than the recommended procedures are used, or wastes other than municipal solid wastes are disposed, it is the obligation of the proposed facility's owner and operator to demonstrate to the responsible agency in advance by means of engineering calculations and data that the techniques employed will satisfy the requirements.

(c) Pursuant to section 211 of the Solid Waste Disposal Act, as amended, these guidelines are mandatory for Federal agencies. In addition, they are recommended to State, interstate, regional, and local government agencies for use in their activities.

(d) These guidelines are intended to provide for environmentally acceptable land disposal site operations. The guidelines do not establish new standards but set forth requirements and recommended procedures to ensure that the design, construction, and operation of both existing and future land disposal sites meet the health and environmental standards for the area in which they are located. The guidelines are intended to apply equally to all solid waste generated by Federal agencies, regardless of whether processed or disposed of on or off Federal property; and solid waste generated by non-Federal entities, but processed or disposed of on Federal property. However, in the case of many Federal facilities such as Post Offices, military recruiting stations, and other offices, local community solid waste processing and disposal facilities are utilized, and processing and disposal is not within the management control of the Federal agency. Thus, implementation of the guidelines can be expected only in those situations where the Federal agency is able to exercise direct management control over the processing and disposal operations. However, every effort must be made by the responsible agency, where offsite facilities are utilized, to attain processing and disposal facilities that are in compliance with the guidelines. Where non-Federal generated solid waste is processed and disposed of on Federal land and/or facilities, those facilities and/or sites must be in compliance with these guidelines. Determination of compliance to meet the requirements of the guidelines rests with the responsible agency, and they have the authority to determine how such compliance may occur.

[40 FR 5159, February 5, 1975]

§ 241.101 Definitions.

As used in these guidelines:

(a) "Cell" means compacted solid wastes that are enclosed by natural soil or cover material in a land disposal site.

(b) "Cover material" means soil or other suitable material that is used to cover compacted solid wastes in a land disposal site.

(c) "Daily cover" means cover material that is spread and compacted on the top and side slopes of compacted solid waste at least at the end of each operating day in order to control vectors, fire, moisture, and erosion and to assure as aesthetic appearance.

(d) "Final cover" means cover material that serves the same functions as daily cover but, in addition, may be permanently exposed on the surface.

(e) "Free moisture" means liquid that will drain freely by gravity from solid materials.

(f) "Groundwater" means water present in the saturated zone of an aquifer.

(g) "Hazardous wastes" means any waste or combination of wastes which pose a substantial present or potential hazard to human health or living organisms because such wastes are nondegradable or persistent in nature or because they can be biologically magnified, or because they can be lethal, or because they may otherwise cause or tend to cause detrimental cumulative effects.

(h) "Infectious waste" means: (1) Equipment, instruments, utensils, and fomites of a disposable nature from the rooms of patients who are suspected to have or have been diagnosed as having a communicable disease and must, therefore, be isolated as required by public health agencies; (2) laboratory wastes, such as pathological specimens (e.g. all tissues, specimens of blood elements, excreta, and secretions obtained from patients or laboratory animals) and disposable fomites (any substance that may harbor or transmit pathogenic organisms) attendant thereto; (3) surgical operating room pathologic specimens and disposable fomites attendant thereto and similar disposable materials from outpatient areas and emergency rooms.

(i) "Intermediate cover" means cover material that serves the same functions as daily cover, but must resist erosion for a longer period of time, because it is applied on areas where additional cells are not to be constructed for extended periods of time.

(j) "Leachate" means liquid that has percolated through solid waste and has extracted dissolved or suspended materials from it.

(k) "Municipal solid wastes" means normally, residential, and commercial solid waste generated within a community.

(l) "Open burning" means burning of solid wastes in the open, such as in an open dump.

(m) "Open dump" means a land disposal site at which solid wastes are disposed of in a manner that does not protect the environment, is susceptible to open burning, and is exposed to the elements, vectors, and scavengers.

(n) "Plans" means reports and drawings, including a narrative operating description, prepared to describe the land disposal site and its proposed operation.

(o) "Residue" means all the solids that remain after completion of thermal processing, including bottom ash, fly ash, and grate siftings.

(p) "Responsible agency" means the organizational element that has the legal duty to ensure that owners, operators or users of land disposal sites comply with these guidelines.

(q) "Runoff" means the portion of precipitation that drains from an area as surface flow.

(r) "Salvaging" means the controlled removal of waste materials for utilization.

(s) "Sanitary landfill" means a land disposal site employing an engineered method of disposing of solid wastes on land in a manner that minimizes environmental hazards by spreading the solid wastes in thin layers, compacting the solid wastes to the smallest practical volume, and applying and compacting cover material at the end of each operating day.

(t) "Scavenging" means uncontrolled removal of solid waste materials.

(u) "Sludge" means the accumulated semiliquid suspension of settled solids deposited from wastewaters or other fluids in tanks or basins. It does not include solids or dissolved material in domestic sewage or other significant pollutants in water resources, such as silt, dissolved or suspended solids in industrial wastewater effluents, dissolved materials in irrigation return flows or other common water pollutants.

(v) "Solid wastes" means garbage, refuse, sludges, and other discarded solid materials resulting from industrial and commercial operations and from community activities. It does not include solids or dissolved material in domestic sewage or other significant pollutants in water resources, such as silt, dissolved or suspended solids in industrial wastewater effluents, dissolved materials in irrigation return flows or other common water pollutants.

(w) "Vector" means a carrier, usually an arthropod, that is capable of transmitting a pathogen from one organism to another.

(x) "Water table" means the upper water level of a body of groundwater.

(y) "Working face" means that portion of the land disposal site where solid wastes are discharged and are spread and compacted prior to the placement of cover material.

Subpart B—Requirements and Recommended Procedures

§ 241.200 Solid wastes accepted.

§ 241.200–1 Requirement.

In consultation with the responsible agencies the owner/operator shall de-

[1] Further guidance may be found in the EPA publication, "Sanitary Landfill Design and Operation," which served as a basis for the development of these guidelines.

termine what wastes shall be accepted and shall identify any special handling required. In general, only wastes for which the facility has been specifically designed shall be accepted; however, other wastes may be accepted if it has been demonstrated to the responsible agency that they can be satisfactorily disposed with the design capability of the facility or after appropriate facility modifications.

§ 241.200–2 Recommended procedures: Design.

The plans should specify the procedures to be employed for wastes requiring special handling.

§ 241.200–3 Recommended procedures: Operations.

(a) Routine sanitary landfill techniques of spreading and compacting solid wastes and placing cover material at the end of each operating day should be used to dispose of municipal solid wastes.

(b) Certain bulky wastes, such as automobile bodies, furniture, and appliances may be salvaged in a controlled manner at a point other than the working face. Otherwise, they should be crushed on solid ground and then pushed onto the working face near the bottom of the cell. Other bulky items, such as demolition and construction debris, tree stumps, and large timbers, should be pushed onto the working face near the bottom of the cell.

(c) Procedures for disposing of dead animals have been established by law in most States, and the operation should comply accordingly. In most cases, small carcasses should be placed on the working face with other municipal solid wastes and covered immediately. In the absence of applicable State laws, large carcasses should be placed in a pit and provided with a cover of compacted soil or other suitable material to encourage runoff of precipitation.

(d) Water treatment plant sludges containing no free moisture and digested or heat treated waste water treatment plant sludges containing no free moisture should be placed on the working face along with municipal solid wastes and covered with soil or municipal solid wastes. The quantities accepted should be determined by operational problems encountered at the working face.

(e) Incinerator and air pollution control residues containing no free moisture should be incorporated into the working face and covered at such intervals as necessary to prevent them from becoming airborne.

§ 241.201 Solid wastes excluded.

§ 241.201–1 Requirement.

Using information supplied by the waste generator/owner, the responsible agency and the disposal site owner/operator shall jointly determine specific wastes to be excluded and shall identify them in the plans. The generator/owner of excluded wastes shall consult with the responsible agency in determining an alternative method of disposal for excluded wastes. The criteria used in considering whether a waste is unacceptable shall include the hydrogeology of the site, the chemical and biological characteristics of the waste, alternative methods available, environmental and health effects, and the safety of personnel. Disposal of pesticides and pesticide containers shall be consistent with the Federal Environmental Pesticides Control Act of 1972 (Pub. L. 92–516) and recommended procedures and regulations promulgated thereunder.

§ 241.201–2 Recommended procedures: Design.

Under certain circumstances it may be necessary to accept special wastes at land disposal sites. The following special wastes require specific approval of the responsible agency for acceptance at the site: Hazardous wastes, infectious institutional wastes, bulk liquids and semi-liquids, sludges containing free moisture, highly flammable or volatile substances, raw animal manure, septic tank pumpings, raw sewage sludge, and certain industrial process wastes. Where the use of the disposal site for such wastes is planned, a special assessment is required of the following items: The site characteristics, nature and quantities of the waste, and special design and operations precautions to be implemented to insure environmentally safe disposal.

§ 241.201–3 Recommended procedures: Operations.

Regular users of the land disposal site should be provided with a list of the materials to be excluded. The list should also be displayed prominently at the site entrance. If a regular user persists in making unacceptable deliveries, he should be barred from the site and reported to the responsible agency.

§ 241.202 Site selection.

§ 241.202–1 Requirement.

Site selection and utilization shall be consistent with public health and welfare, and air and water quality standards and adaptable to appropriate land-use plan.

§ 241.202–2 Recommended procedures: Design.

(a) The hydrogeology of the site should be evaluated in order to design site development in a manner to protect or minimize the impact on groundwater resources. Unacceptable hydrogeologic conditions may be altered to render the site acceptable, but all alterations should be detailed in the plans. Precipitation, evapotranspiration, and other climitological conditions should be considered in site selection and design.

(b) Characteristics of on-site soil should be evaluated with respect to their effects on site operations, such as vehicle maneuverability and use as cover material.

(c) Environmental factors, climatological conditions, and socioeconomic factors should be given full consideration as selection criteria.

(d) The site should be accessible to vehicles which the site is designed to serve by all-weather roads leading from the public road system; temporary roads should be provided as needed to deliver wastes to the working face.

(e) The site should not be located in an area where the attraction of birds would pose a hazard to low-flying aircraft.

§ 241.202–3 Recommended procedures: Operations.

Not Applicable.

§ 241.203 Design.

§ 241.203–1 Requirement.

Plans for the design, construction, and operation of new sites or modifications to existing sites shall be prepared or approved by a professional engineer. The plans shall be submitted to the responsible agency for review and, if warranted, approval.

§ 241.203–2 Recommended procedures: Design.

(a) The types and quantities of all solid wastes expected to be disposed of at the facility should be determined by survey and analysis to form a basis for design.

(b) Site development plans should be prepared or approved by a professional engineer and should include: The various design factors addressed elsewhere in the guidelines, as well as:

(1) Initial and final topographies at contour intervals of 5 feet or less.

(2) Land use and zoning within one-quarter mile of the site including location of all residents, buildings, wells, water courses, arroyos, rock outcroppings, roads, and soil or rock borings. All airports within the vicinity of the site should be identified to aid in assessing the potential hazard of birds to aircraft.

(3) Location of all utilities within 500 feet of the site.

(4) Employee convenience and equipment maintenance facilities.

(5) Narrative descriptions, with associated drawings, indicating site development and operation procedures.

(c) Plans should describe the projected use of the completed land disposal site. In addition to maintenance programs and provisions, where necessary, for monitoring and controlling decomposition gases and leachate, the plans should address the following ultimate use criteria:

(1) *Cultivated area.* The major concern if the completed site is to be cultivated is that the integrity of the final cover not be disturbed by agricultural cultivation activities. In this regard, a sufficient depth of cover material to allow cultivation and to support vegetation should be applied in addition to that recommended for final cover.

(2) *Structures.* It is not recommended practice to construct major structures on a completed land disposal site. If major

structures are to be built near a completed land disposal site, a professional engineer should approve their design and construction including provision for protection against potential hazards of solid waste decomposition gases.

§ 241.203–3 Recommended procedures: Operations.

Not applicable.

§ 241.204 Water quality.

§ 241.204–1 Requirement.

The location, design, construction, and operation of the land disposal site shall conform to the most stringent of applicable water quality standards established in accordance with or effective under the provisions of the Federal Water Pollution Control Act, as amended. In the absence of such standards, the land disposal site shall be located, designed, constructed and operated in such a manner as to provide adequate protection to ground and surface waters used as drinking water supplies.

§ 241.204–2 Recommended procedures: Design.

(a) Plans should include:

(1) Current and projected use of water resources in the potential zone of influence of the land disposal site.

(2) Groundwater elevation and movement and proposed separation between the lowest point of the lowest cell and the predicted maximum water table elevation.

(3) Potential interrelationship of the land disposal site, local aquifers, and surface waters based on historical records or other sources of information.

(4) Background and initial quality of water resources in the potential zone of influence of the land disposal site.

(5) Proposed location of observation wells, sampling stations, and testing program planned, when appropriate.

(6) Description of soil and other geologic material to a depth adequate to allow evaluation of the water quality protection provided by the soil and other geologic material.

(7) Provision for surface water runoff control to minimize infiltration and erosion of cover material.

(8) Potential of leachate generation and proposed control systems, where necessary, for the protection of ground and surface water resources.

(b) If a land disposal site is located in a flood plain, it should be protected against at least the 50-year design flood by impervious dikes and other appropriate means to prevent the floodwaters from contacting municipal solid waste.

§ 241.204–3 Recommended procedures: Operations.

(a) Surface water courses and runoff should be diverted from the land disposals site (especially from the working face) by means such as trenches, conduits, and proper grading. The land disposal site should be constructed and graded so as to promote rapid surface water runoff without excessive erosion. Regrading should be done as required during construction and after completion to avoid ponding of precipitation and to maintain cover material integrity.

(b) Siltation or retention basins or other approved methods of retarding runoff should be used where necessary to avoid stream siltation or flooding problems due to excessive runoff.

(c) Leachate collection and treatment systems should be used where necessary to protect ground and surface water resources.

(d) Municipal solid wastes and leachate therefrom should not be allowed to contact ground or surface water so as to impair the water's use.

§ 241.205 Air quality.

§ 241.205–1 Requirement.

The design, construction, and operation of the land disposal site shall conform to applicable ambient air quality standards and source control regulations established under the authority of the Clean Air Act, as amended, or State or local standards effective under that Act, if the latter are more stringent.

§ 241.205–2 Recommended procedures: Design.

Plans should include an effective dust control program.

§ 241.205–3 Recommended procedures: Operations.

(a) Open burning of municipal solid waste should be prohibited.

(b) Dust control measures should be initiated as necessary to protect the health and safety of facility personnel, nearby residents, and persons using the facility.

§ 241.206 Gas control.

§ 241.206–1 Requirement.

Decomposition gases generated within the land disposal site shall be controlled on site, as necessary, to avoid posing a hazard to occupants of adjacent property.

§ 241.206–2 Recommended procedures: Design.

Plans should assess the need for gas control and indicate the location and design of any vents, barriers, or other control measures to be provided.

§ 241.206–3 Recommended procedures: Operations.

(a) Decomposition gases should not be allowed to migrate laterally from the land disposal site to endanger occupants of adjacent properties. They should be vented to the atmosphere directly through the cover material, cutoff trenches, or ventilation systems in such a way that they do not accumulate in explosive or toxic concentrations, especially within structures. (Information on the limits of flammability of gases is available in such references as the "Handbook of Chemistry and Physics," 54th ed. CRC Press, Inc., Cleveland, 1973.)

(b) Decomposition gases should not be allowed to concentrate in a manner that will pose an explosion or toxicity hazard.

§ 241.207 Vectors.

§ 241.207–1 Requirement.

Conditions shall be maintained that are unfavorable for the harboring, feeding, and breeding of vectors.

§ 241.207–2 Recommended procedures: Design.

Plans should include contingency programs for vector control, and the operator should be prepared at all times to implement those procedures.

§ 241.207–3 Recommended procedures: Operations.

Vector control contingency programs should be implemented when necessary to prevent or rectify vector problems.

§ 241.208 Aesthetics.

§ 241.208–1 Requirement.

The land disposal site shall be designed and operated at all times in an aesthetically acceptable manner.

§ 241.208–2 Recommended procedures: Design.

Plans should include an effective litter control program.

§ 241.208–3 Recommended procedures: Operations.

(a) Portable litter fences or other devices should be used in the immediate vicinity of the working face and at other appropriate locations to control blowing litter. At the end of each operating day, or more often as required, litter should be removed from the fences and incorporated into the cell being used. Alternatively, the litter may be containerized for disposal on the next operating day.

(b) Wastes that are easily moved by wind should be covered, as necessary, to prevent their becoming airborne and scattered.

(c) On-site vegetation should be cleared only as necessary. Natural windbreaks, such as green belts, should be maintained where they will improve the appearance and operation of the land disposal site. Buffer strips should be planted and/or berms constructed as necessary to screen the working force from nearby residences or major roadways.

(d) Salvage operations should be conducted in such a manner as to not detract from the appearance of the land disposal site. Salvaged material should be removed from the land disposal site frequently enough to maintain aesthetic acceptability.

§ 241.209 Cover material.

§ 241.209–1 Requirement.

Cover material shall be applied as necessary to minimize fire hazards, infiltration of precipitation, odors, and blowing litter; control gas venting and vectors; discourage scavenging; and provide a pleasing appearance.

§ 241.209–2 Recommended procedures: Design.

Plans should specify:

(a) Cover material sources and soil classifications (Unified Soil Classification System or U.S. Department of Agriculture Classification System).

(b) Surface grades and side slopes needed to promote maximum runoff, without excessive erosion, to minimize infiltration.

(c) Procedures to promote vegetative growth as promptly as possible to combat erosion and improve appearance of idle and completed areas.

(d) Procedures to maintain cover material integrity, e.g., regarding and recovering.

§ 241.209–3 Recommended procedures: Operations.

(a) Daily cover should be applied regardless of weather; sources of cover material should, therefore, be accessible on all operating days. The thickness of the compacted daily cover should not be less than 6 inches.

(b) Intermediate cover should be applied on areas where additional cells are not to be constructed for extended periods of time; normally, one week to one year. The thickness of the compacted intermediate cover should not be less than 1 foot.

(c) Final cover should be applied on each area as it is completed or if the area is to remain idle for over one year. The thickness of the compacted final cover should not be less than 2 feet.

§ 241.210 Compaction.

§ 241.210–1 Requirement.

In order to conserve land disposal site capacity, thereby preserving land resources, and to minimize moisture infiltration and settlement, municipal solid waste and cover material shall be compacted to the smallest practicable volume.

§ 241.210–2 Recommended procedures: Design.

(a) Arrangements should be made and indicated in the plans whereby substitute equipment will be available to provide uninterrupted service during routine equipment maintenance periods or equipment breakdowns.

(b) An equipment maintenance facility should be provided onsite, or appropriate contract arrangements should be made to receive such service.

(c) Equipment manuals, catalogs, and spare parts lists should be compiled and readily available onsite.

§ 241.210–3 Recommended procedures: Operations.

(a) Municipal solid waste handling equipment should on any operating day be capable of performing the following functions:

(1) Spread the solid waste accepted in layers no more than 2 feet thick while confining it to the smallest practicable area;

(2) Compact the spread solid wastes to the smallest practicable volume (several such compacted layers will form a cell); and

(3) Place, spread, and compact the cover material over the cell at least by the end of each day's operation.

(b) A preventive maintenance program should be employed to maintain equipment in operating order.

(c) An operating manual describing the various tasks that must be performed during a typical shift should be available to employees for reference.

§ 241.211 Safety.

§ 241.211–1 Requirement.

The land disposal site shall be designed, constructed, and operated in such a manner as to protect the health and safety of personnel associated with the operation. Pertinent provisions of the Occupational Safety and Health Act of 1970 (Pub. L. 91–596) and regulation promulgated thereunder shall apply.

§ 241.211–2 Recommended procedures: Design.

A manual describing safety precautions and procedures to be employed should be developed.

§ 241.211–3 Recommended procedures: Operations.

(a) A safety manual should be available for use by employees, and they should be instructed in application of its procedures.

(b) Personal safety devices such as hard hats, gloves, safety glasses, and footwear should be provided to facility employees.

(c) Safety devices, including but not limited to such items as rollover protective structures, seatbelts, audible reverse warning devices, and fire exinguishers should be provided on all equipment used to spread and compact solid wastes or cover material at the facility.

(d) Provisions should be made to extinguish any fires in wastes being delivered to the site or which occur at the working face or within equipment or personnel facilities.

(e) Communications equipment should be available on site for emergency situations.

(f) Scavenging should be prohibited at all times to avoid injury and to prevent interference with site operations.

(g) Access to the site should be controlled and should be by established roadways only. The site should be accessible only when operating personnel are on duty. Large containers may be placed at the site entrance so that users can conveniently deposit waste after hours. The containers and the areas around them should be maintained in a sanitary and litter-free condition.

(h) Traffic signs or markers should be provided to promote an orderly traffic pattern to and from the discharge area, maintain efficient operating conditions, and, if necessary, restrict access to hazardous areas. Drivers of manually discharging vehicles should not hinder operation of mechanically discharging vehicles. Vehicles should not be left unattended at the working face or along traffic routes. If a regular user persistently poses a safety hazard, he should be barred from the site and reported to the responsible agency.

§ 241.212 Records.

§ 241.212–1 Requirement.

The owner/operator of the land disposal site shall maintain records and monitoring data to be provided, as required, to the responsible agency.

§ 241.212–2 Recommended procedures: Design.

Where appropriate, plans should prescribe methods to be used in maintaining records and monitoring the environmental impact of the land disposal site. Information on recording and monitoring requirements should be obtained from the responsible agency.

§ 241.212–3 Recommended procedures: Operations.

(a) Records should be maintained covering at least the following:

(1) Major operational problems, complaints, or difficulties.

(2) Qualitative and quantitative evaluation of the environmental impact of the land disposal site, with regard to the effectiveness of gas and leachate control, including results of: (i) Leachate sampling and analyses; (ii) gas sampling and analyses; (iii) ground and surface water quality sampling and analyses upstream and downstream of the site.

(3) Vector control efforts.

(4) Dust and litter control efforts.

(5) Quantitative measurements of the solid wastes handled. This should be accomplished through routine or periodic utilization of scales and topographic surveys of the site.

(6) Description of solid waste materials received, identified by source of materials.

(b) Upon completion of the site, a detailed description, including a plat, should be recorded with the area's land recording authority. The description should include general types and locations of wastes, depth of fill, and other information of interest to potential landowners.

APPENDIX—RECOMMENDED BIBLIOGRAPHY

1. Banta, J., ET AL. Sanitary landfill; manual of engineering practices, No. 39. American Society of Civil Engineers, 1959.

2. Black, C. A., D. D. Evans, J. L. White, L. E. Ensminger, F. E. Clark, and R. C. Dinauer, EDS. Methods of soil analysis. Pt. 1. Physical and mineralogical properties, including statistics of measurement and sampling. Madison, Wis., American Society of Agronomy, Inc., 1965.

3. Black, R. J. Sanitary landfill . . . an answer to a community problem; a route to a community asset. Public Health Service Publication No. 1012. Washington, U.S. Government Printing Office, 1970. [8 p.].

4. Bjornson, B. F., H. D. Pratt, and K. S. Littig. Control of domestic rats & mice. Public Health Service Publication No. 563. Washington, U.S. Government Printing Office, 1956. Revised 1960, 1968. Reprinted [Bureau of Solid Waste Management] 1970. 41 p.

5. Brashares, W. C., and R. M. Golden. Occupational Safety and Health Act. Special

4.0 STATUS OF THE FERROALLOY INDUSTRY

The information contained in this Section was obtained from The Ferroalloys Association, Mineral Facts and Problems (Tables 1-9), 1975, and The Minerals Yearbook, 1975 (Tables 10-18). Information on the Industry is current to 1977; 1978 is not complete as yet but will be supplemented as the project continues.

THE FERROALLOYS ASSOCIATION
1612 K Street, N.W.
Washington, D. C. 20006
(202) 659-4131

August 15, 1978

ENVIRONMENTAL CONTROL COSTS AND INVESTMENT

Capital Expenditures (Millions of Dollars)

	All Expenditures	Air Pollution	Water Pollution
1970-1974	181	74	2
1975	109	46	1
1976	65	28	2
1977	41	13	11

Pollution Control Costs

	Millions of Dollars		Millions KWHrs.	
	Pollution Control	Industry Sales	Pollution Control	Industry Total
1975	25	680	400	8,224
1976	27	772	512	8,935
1977	33	780	548	8,923

THE FERROALLOYS ASSOCIATION

January 17, 1977

ANALYSIS OF THE U.S. FERROALLOY PRODUCTION CAPACITY

An analysis of the U.S. ferroalloy production capacity was made.

Year	No. Furnaces	Furnace Size: Small 0-10 MW	Medium 10-20 MW	Large 20 MW & Over	Total MW
1972	144	90 (634 MW)	45 (611 MW)	9 (287 MW)	1532
1977(1)	113	32 (250 MW)	51 (756 MW)	30 (840 MW))	1846

A further analysis of the 1977 data shows that normally 1173 MW of capacity is used for silicon products, 334 MW for manganese, with the remaining 339 MW devoted to chromium alloys.

Using the same designation as above for furnace size, a breakdown shows:

	Silicon Products	Manganese Products	Chromium Products
Small	11	10	11
Medium	30	12	9
Large	22	4	4
Total Fces.	63	26	24

(1) Includes all U.S. furnaces presently available or under construction.

TABLE 1. PRODUCERS OF FERROALLOYS IN THE UNITED STATES IN 1974

Producer	Plant location	Product[1]	Type of furnace
FERROALLOYS EXCEPT FERROPHOSPHORUS			
Airco Alloys and Carbide, a division of Airco, Inc	Calvert City, Ky	FeCr, FeCrSi, FeMn, FeSi, SiMn.	Electric.
	Charleston, S.C		
	Mobile, Ala		
	Niagara Falls, N.Y		
Bethlehem Steel Corp	Johnstown, Pa	FeMn	Blast.
Chromium Mining & Smelting Co	Woodstock, Tenn	FeCr, FeSi, FeCrSi	Electric.
Climax Molybdenum Co., a division of Amax Inc	Langeloth, Pa	FeMo	Aluminothermic.
Diamond Shamrock Corp	Kingwood, W. Va	Mn	Electric.
	Cambridge, Ohio	FeB, FeCb, FeTi, FeV, FeSi, silvery iron, other.[2]	Do.
	Graham, W. Va		
Foote Mineral Co	Keokuk, Iowa		
	Vancoram, Ohio		
	Wenatchee, Wash		
Hanna Nickel Smelting Co	Riddle, Oreg	FeNi	Electric.
Interlake Steel Corp	Beverly, Ohio	FeCr, FeCrSi, FeSi, SiMn.	Do.
	Selma, Ala		
Kawecki Beryico Industries	Springfield, Oreg	Si	Electric.
Kawecki Chemical Co	Easton, Pa	FeCb	Aluminothermic
Molybdenum Corp. of America	Washington, Pa	FeMo, FeW, FeCb, FeB	Electric and aluminothermic.
New Jersey Zinc Co	Palmerton, Pa	Spin	Electric.
Ohio Ferro-Alloys Corp	Brilliant, Ohio	FeCr, FeSi, FeB, FeMn, SiMn, other.[2]	Do.
	Philo, Ohio		
	Powhatan, Ohio		
Reading Alloys	Robesonia, Pa	FeCb, FeV	Aluminothermic.
Shieldalloy Corp	Newfield, N.J	FeV, FeTi, FeB, FeCb, NiCb, CrMo, other.[2]	Do.
Tennessee Alloys Corp	Bridgeport, Ala	FeSi	Electric.
	Kimball, Tenn		
Tenn-Tex Alloy Corp. of Houston	Houston, Tex	FeMn, SiMn	Do.
Union Carbide Corp	Alloy, W. Va	FeB, FeCr, FeCrSi, FeCb, FeSi, FeMn, FeTi, FeW, FeV, SiMn, other.[2]	Do.
	Ashtabula, Ohio		
	Marietta, Ohio		
	Niagara Falls, N.Y		
	Portland, Oreg		
	Sheffield, Ala		
U.S. Steel Corp	McKeesport and Clairton, Pa	FeMn	Blast.
Woodward Iron Co	Woodward, Ala	FeSi, FeMn, SiMn	Electric.
	Rockwood, Tenn		
FERROPHOSPHORUS			
FMC Corp	Pocatello, Idaho	FeP	Electric.
Hooker Chemical Corp	Columbia, Tenn	FeP	Do.
Mobil Chemical Co	Nichols, Fla	FeP	Do.
Monsanto Chemical Co	Columbia, Tenn	FeP	Do.
	Soda Springs, Idaho		
Stauffer Chemical Co	Tarpon Springs, Fla	FeP	Do.
	Mt. Pleasant, Tenn		
	Silver Bow, Mont		
Tennessee Valley Authority	Muscle Shoals, Ala	FeP	Electric.

[1] CrMo=chromium molybdenum. FeB=ferroboron. FeCb=ferrocolumbium. FeCr=ferrochromium. FeMn=ferromanganese. FeMo=ferromolybdenum. FeNi=ferronickel. FeP=ferrophosphorus. FeSi=ferrosilicon. FeTi=ferrotitanium. FeV=ferrovanadium. FeW=ferrotungsten. NiCb=nickel columbium. Si=silicon metal. SiMn=silicomanganese. Spin=spiegeleisen.

[2] Includes zirconium alloys, ferrosilicon magnesium, calcium silicon, and miscellaneous ferroalloys.

TABLE 2. FERROALLOYS PRODUCED AND SHIPPED FROM FURNACES IN THE UNITED STATES

	1973				1974			
	Production		Shipments		Production		Shipments	
	Gross weight (short tons)	Alloy element contained (average percent)	Gross weight (short tons)	Value (thousand dollars)	Gross weight (short tons)	Alloy element contained (average percent)	Gross weight (short tons)	Value (thousand dolalrs)
Ferromanganese[1]	683,075	78.8	779,459	136,907	544,361	78.6	573,877	162,082
Silicomanganese	183,702	66.3	195,956	39,439	196,140	65.3	192,180	56,713
Ferrosilicon[2]	1,012,807	53.2	1,062,829	258,120	905,247	54.6	922,965	346,320
Chromium alloys:								
Ferrochromium:								
High carbon	241,667	66.8	261,624	73,055	230,037	66.4	226,728	92,273
Low carbon	88,085	69.4	104,329	45,988	87,263	73.2	93,355	71,095
Ferrochromium Silicon	80,788	36.8	89,799	26,743	110,718	38.1	112,192	56,273
Other alloys[3]	16,306	43.9	16,816	10,788	16,642	44.2	17,208	11,903
Total	426,846	60.8	472,568	156,574	444,660	60.9	449,483	231,544
Ferrotitanium	1,784	39.9	2,176	2,417	1,323	43.3	1,215	1,474
Ferrophosphorus	129,646	16.5	143,257	7,681	100,174	18.1	125,265	9,024
Ferrocolumbium	1,167	64.1	2,758	15,316	1,174	65.1	1,278	7,898
Other[4]	80,928	39.0	96,799	104,088	64,366	39.2	65,291	107,713
Grand Total	2,519,955	60.0	2,755,802	720,542	2,257,445	60.4	2,331,554	922,768

[1] Includes briquets and fused-salt electrolytic.
[2] Includes silicon metal, silvery pig, and inoculant-type alloys.
[3] Includes chromium briquets, chromium metal, exothermic chromium additives, and other miscellaneous chromium alloys.
[4] Includes ferroboron and other complex boron additive alloys, ferronickel, ferromolybdenum, ferrotungsten, ferrovanadium, spiegeleisen, ferrozirconium, and other miscellaneous alloys.

TABLE 3. CONSUMPTION OF FERROALLOYS AS ADDITIVES IN THE UNITED STATES, BY END USE, 1974 (SHORT TONS OF ALLOYS)

Alloy	Stainless steels	Other alloy steels	Carbon steels	Tool steels	Cast irons	Superalloys	Alloys (excludes alloy steels and superalloys)	Other uses[1]	Total
Ferromanganese[2]	21,304	226,189	865,562	2,762	27,241	817	21,630	3,355	1,168,860
Silicomanganese	12,643	44,103	100,750	16	10,677	90	3,645	5,242	177,166
Silicon alloys[3]	37,167	99,514	187,839	3,408	524,494	585	81,693	53,202	987,902
Ferrotitanium[4]	2,386	959	1,065	W	108	779	2,080	34	7,421
Ferrophosphorus[5]	25	1,551	12,924	W	5,705	----	320	76	20,601
Ferroboron	11	260	30	----	22	W	71	2	396
Total	73,536	372,586	1,168,170	6,186	568,247	2,271	109,439	61,911	2,362,346

W Withheld to avoid disclosing individual company confidential date; included in "Other uses."
[1] Includes unspecified uses.
[2] Includes spiegeleisen, manganese metal, and briquets.
[3] Includes silicon metal, silvery iron, and inoculant alloys.
[4] Includes other forms such as scrap titanium metal.
[5] Includes other phosphorus materials.

TABLE 4. CONSUMPTION OF END USE OF FERROALLOYS AS ALLOYING ELEMENTS IN THE UNITED STATES IN 1974 (SHORT TONS OF ALLOYS)

Alloy	Stainless steels	Other alloy steels	Carbon steels	Tool steels	Cast irons	Superalloys	Alloys (excludes alloy steels and superalloys)	Other uses[1]	Total
Ferrochromium[2]	265,710	58,185	2,606	4,872	7,163	11,987	5,348	4,069	359,940
Ferromolybdenum[3]	1,064	1,283	238	606	1,814	332	401	88	5,826
Ferrotungsten[4]	71	123	----	701	----	64	47	2	1,008
Ferrovanadium[5]	38	4,182	787	936	47	50	28	8	6,076
Ferrocolumbium	256	883	506	10	W	474	16	40	2,185
Ferronickel	36,519	6,953	----	----	417	590	1,171	3	45,663
Total	303,658	71,619	4,137	7,125	9,441	13,497	7,011	4,210	420,698

W Withheld to avoid disclosing individual company confidential data; included in "Other uses."
[1] Includes unspecified uses.
[2] Includes other chromium ferroalloys and chromium metal.
[3] Includes calcium molybdate but not molybdenum oxide.
[4] Includes melting base self-reducing tungsten.
[5] Includes other vanadium-carbon-iron ferroalloys.

TABLE 5. U.S. EXPORTS OF FERROALLOYS

Alloys	1972		1973		1974	
	Quantity (short tons)	Value (thousand dollars)	Quantity (short tons)	Value (thousand dollars)	Quantity (short tons)	Value (thousand dollars)
Ferrocerium and alloys	101	610	55	286	96	503
Ferrochromium	12,861	4,342	15,164	5,091	7,245	3,764
Ferromanganese	6,842	1,512	8,574	2,137	7,011	2,204
Ferromolybdenum	454	1,163	1,112	3,151	2,047	7,094
Ferrophosphorus	1,179	111	19,030	773	3,677	408
Ferrosilicon	7,367	2,196	15,984	4,051	6,575	3,338
Ferrotungsten	11	85	6	50	10	215
Ferrovanadium	269	1,256	1,416	8,734	1,335	7,863
Ferroalloys, n.e.c	15,557	8,495	22,328	9,485	18,172	12,186
Total	44,641	19,770	83,669	33,758	46,168	37,575

TABLE 6. U.S. IMPORTS FOR CONSUMPTION OF FERROALLOYS AND FERROALLOY METALS

Alloy	1973			1974		
	Gross weight (short tons)	Content (short tons)	Value (thousand dollars)	Gross weight (short tons)	Content (short tons)	Value (thousand dollars)
Chromium metal	2,690	(1)	6,080	1,959	(1)	5,397
Ferrocerium and other cerium alloys	19	(1)	127	26	(1)	303
Ferrochromium:						
Containing 3 percent or more carbon	112,197	69,534	18,253	116,156	71,317	33,132
Containing less than 3 percent carbon	43,344	30,224	16,922	45,411	30,762	22,124
Ferromanganese:						
Containing less than 1 percent carbon	1,939	1,595	810	4,163	3,494	1,660
Containing over 1 percent and less than 4 percent carbon	46,243	37,496	10,919	42,827	34,804	15,468
Containing 4 percent or more carbon	342,185	264,776	41,579	384,224	289,575	71,292
Ferronickel	89,780	25,700	70,532	102,430	33,425	115,649
Ferrosilicon:						
8–60 percent silicon	23,979	7,257	3,657	28,762	8,480	6,269
60–80 percent silicon	75,519	55,750	17,364	112,556	83,615	59,305
80–90 percent silicon	396	343	47	289	243	164
Over 90 percent silicon	39	38	19	624	587	611
Ferrosilicon-chromium	13,037	(1)	3,127	7,549	(1)	2,044
Ferrosilicon-manganese (Mn content)	44,759	30,061	6,367	67,752	44,718	20,634
Ferrotitanium and ferrosilicon titanium	256	(1)	178	2,296	(1)	3,123
Ferrotungsten and ferrosilicon tungsten	696	553	3,105	505	404	3,029
Ferrovanadium	277	196	1,174	216	139	1,120
Ferrozirconium	1,249	(1)	627	813	(1)	553
Ferroalloys n.e.c.[2]	2,246	(1)	6,719	2,445	(1)	7,161
Manganese metal	2,452	(1)	1,100	2,505	(1)	1,376
Silicon metal (less than 99.7 percent silicon	7,939	7,588	3,509	5,508	5,422	5,810
Base metal alloys[3]				16,577	(1)	12,341
Total	811,241	XX	212,215	945,593	XX	388,565

XX Not applicable.
[1] Not recorded.
[2] Principally ferrocolumbium.
[3] Principally silicon metal of 94 to 97 percent silicon.

TABLE 7. FERROALLOY SUPPLY-DEMAND RELATIONSHIPS FOR MANGANESE, SILICON, AND CHROMIUM ALLOYS ONLY, 1969-74[1]

(1,000 SHORT TONS OF CONTAINED METAL)

	1969	1970	1971	1972	1973	1974[2]
World ferroalloy production:						
United States:						
Manganese alloys	805	780	706	727	660	451
Chromium alloys	261	257	216	221	271	273
Silicon alloys	471	530	448	543	578	503
Total	1,537	1,567	1,370	1,491	1,509	1,227
Rest of world	5,970	7,103	6,955	7,633	8,595	8,763
World total	7,507	8,670	8,325	9,124	10,104	9,990
Components of U.S. supply:						
Domestic mines[3]	475	550	496	570	567	515
Secondary chromium	72	57	50	60	80	85
Net Government releases:						
Chromium	80	71	42	55	48	----
Manganese	50	140	118	218	274	338
Imports manganese alloys	239	236	212	305	341	376
Industry, stocks, manganese alloys, Jan. 1	190	147	150	97	186	150
Total U.S. supply, manganese	1,290	1,303	1,186	1,347	1,461	1,315
Imports, chromium alloys	42	26	56	96	102	107
Industry stocks, chromium alloys, Jan. 1	37	30	33	50	54	29
Total U.S. supply, chromium	492	441	397	482	555	494
Imports, silicon alloys	17	11	13	30	71	109
Industry stocks, silicon alloys, Jan. 1	69	76	66	63	60	26
Total U.S. supply, silicon	557	617	527	628	709	638
Distribution of U.S. supply:						
Stocks reported Dec. 31st:						
Manganese alloys (Producers only)	147	150	97	186	150	75
Chromium alloys	30	33	50	54	24	15
Silicon alloys	76	66	63	60	37	32
Exports:						
Manganese alloys	1	16	3	5	6	5
Chromium alloys	16	18	6	8	9	5
Silicon alloys	4	26	15	4	9	4
Industrial demand:						
Manganese alloys	1,142	1,137	1,086	1,156	1,292	1,235
Chromium alloys	456	390	341	420	522	474
Silicon alloys	477	525	449	561	653	602
Ferroalloys total	2,075	2,052	1,876	2,137	2,537	2,311
U.S. demand pattern:						
Transportation	474	455	469	486	584	540
Construction	473	467	421	462	543	530
Machinery	359	356	321	364	471	450
Fabricated metal products	163	175	165	165	220	240
Electrical	96	101	90	113	121	116
Oil and gas industries	86	89	89	92	116	115
Other	438	428	291	431	461	310
Total	2,089	2,071	1,846	2,113	2,516	2,311

[1] World statistics incomplete prior to 1969.
[2] Preliminary.
[3] Only silica raw materials after 1969.

TABLE 8. FERROALLOY PRICES FOR BULK QUANTITIES, DECEMBER 1973 AND 1974

Ferroalloy	Grade and percent	Dollars per pound	
		December 1973	December 1974[2]
Ferrochromium	Charge chromium, 64–67 chromium	[1]0.20	0.50-0.53
Do	Low carbon-0.05 max.; 67–73 chromium	[1].33	.83
Ferrocolumbium	55–60 columbium	[1]4.12	4.12
Ferromanganese	Standard; 78 manganese	.0893	.187
Silicomanganese	3 max. carbon; 66 manganese, 19 silicon	.1123	.215
Spiegeleisen	19–21 manganese; 2 silicon	.0442	.091
Ferromolybdenum	65 molybdenum	[1]2.21	3.19
Ferronickel	Domestic, 50 nickel	[1]1.38	1.97
Ferrophosphorus	19–23 phosphorus	.0536	.067
Ferrosilicon	50 silicon	[1].15/.0.165	.33
Ferrotitanium	70 titanium, low carbon	[1]1.44	1.44
Ferrotungsten	76–80 tungsten; low molybdenum	[1]4.60	7.10
Ferrovanadium	70–75 vanadium	[1]4.19	5.55

[1] Contained significant element only; otherwise per pound of alloy.
[2] Prices as quoted in American Metal Market.

TABLE 9. WORLD FERROALLOY PRODUCTION 1973; CAPACITY PROJECTIONS FOR MANGANESE, SILICON, AND CHROMIUM ALLOYS ONLY, 1974-85

(Thousand short tons metallurgical ores and alloys)

	1973 Production		1974 Estimated capacity		1980 Estimated capacity		1985 Estimated capacity	
	Ores[1]	Alloys	Ores	Alloys	Ores	Alloys	Ores	Alloys
North America:								
United States	1,260A	2,307	1,480	2,500	1,600	2,900	1,800	3,100
Canada	465A	290	500	350	750	500	1,050	700
Mexico	265B	85	290	150	600	500	800	500
Total	1,990	2,682	2,250	3,000	2,950	3,900	3,650	4,300
South America:								
Argentina	95B	60	160	100	200	200	200	400
Brazil	2,100C	153	2,300	400	4,000	800	4,500	1,000
Chile	40B	50	100	60	300	200	450	300
Other	----A	30	95	60	170	100	320	200
Total	2,235	327	3,655	620	4,670	1,300	5,470	1,900
Europe:								
Belgium-Luxembourg	----A	126	100	250	100	250	150	350
Czechoslovakia	80A	136	100	180	310	200	350	250
France	325A	952	400	1,200	400	1,100	350	1,100
Germany, West	250A	705	250	800	400	800	400	900
Italy	70A	182	100	350	250	450	250	500
Norway	400A	720	700	800	780	900	800	1,000
Poland	120A	310	150	400	200	450	200	500
Spain	310B	265	400	300	700	400	800	500
Sweden	120A	245	150	300	180	350	200	400
United Kingdom	----A	200	----	350	100	350	150	400
U.S.S.R.	8,100C	[2]2,305	9,500	3,000	11,000	3,600	13,000	4,200
Yugoslovia	50A	154	75	200	125	300	150	400
Other	275A	176	350	280	380	300	380	400
Total	10,100	6,919	12,275	8,410	15,285	9,450	17,180	10,900
Africa:								
Gabon	1,870B	----	2,000	----	2,600	----	3,100	----
Ghana	300B	----	350	----	250	----	250	----
Rhodesia, S.	300D	54	800	60	800	200	900	300
S. Africa, Rep. of	2,820C	561	2,600	700	3,500	1,200	4,500	1,600
Zaire	455B	----	500	----	600	----	700	----
Other	160C	----	230	----	[3]570	----	770	----
Total	6,205	615	6,480	760	8,320	1,400	10,220	1,900
Asia:								
India	815C	182	1,010	300	1,215	400	1,425	500
Japan	540A	2,080	600	2,500	600	2,500	600	2,500
Peoples Rep. of China	880B	[e]350	1,020	400	1,240	800	2,000	1,200
Middle East	120C	----	200	----	750	300	850	500
Turkey	617C	10	700	10	800	30	800	35
Indonesia	----	----	----	----	350	200	800	500
Other	----	40	70	40	210	100	240	100
Total	3,032	2,672	3,600	3,600	3,270	5,525	6,715	5,335
Oceania: Australia	2,016B	94	2,200	100	2,600	400	3,000	700
World total	25,678	13,309	30,470	16,160	39,350	20,950	46,245	25,700

[e] Estimate.
[1] Shippable ore. Code: A=principally silicon raw materials. B=manganese and silicon raw materials. C=chromium and manganese raw materials. D=principally chromite raw materials.
[2] Upper Volta manganese ore starting 1978–79; includes also manganese ore from Morocco; chromite from Malagasy Republic.

TABLE 10. GOVERNMENT INVENTORY OF FERROALLOYS (STOCKPILE GRADE), DECEMBER 31, 1975 (THOUSAND SHORT TONS)

Alloy	National stockpile	Supplemental stockpile	Total[1]
Ferrochromium:			
High-carbon	126	276	403
Low-carbon	128	191	319
Ferrochromium-silicon	26	33	58
Ferrocolumbium (contained columbium)	0.5	--	0.5
Ferromanganese:			
High-carbon	30	578	607
Medium-carbon	29	--	29
Ferromolybdenum (contained molybdenum)	0.1	--	0.1
Ferrotungsten (contained tungsten)	1	--	1
Silicomanganese	24	--	24

[1]Data may not add to totals shown because of independent rounding.

TABLE 11. FERROALLOYS PRODUCED AND SHIPPED FROM FURNACES IN THE UNITED STATES[1]

	1974[r]				1975			
	Production		Shipments		Production		Shipments	
	Gross weight (short tons)	Alloy element contained (average percent)	Gross weight (short tons)	Value (thousands)	Gross weight (short tons)	Alloy element contained (average percent)	Gross weight (short tons)	Value (thousands)
Ferromanganese[2]	544,361	78	573,877	$162,082	575,809	79	556,131	$222,522
Silicomanganese	196,140	65	192,181	57,014	143,262	66	126,418	53,913
Ferrosilicon[3]	931,852	56	927,070	356,965	790,860	55	709,937	321,470
Chromium alloys:								
Ferrochromium:								
High-carbon	220,923	67	226,728	92,284	117,643	67	116,357	78,483
Low-carbon	87,263	72	93,111	71,096	53,973	70	43,325	56,489
Ferrochromium-silicon	98,974	36	100,652	50,935	51,992	37	41,306	27,527
Other alloys[4]	28,386	52	28,748	17,242	25,209	48	22,495	15,048
Total	435,546	60	449,239	231,557	248,817	59	223,483	177,547
Ferrophosphorus	106,486	20	133,185	9,061	102,896	21	96,006	10,927
Ferrocolumbium	1,174	65	1,279	7,899	615	65	481	3,549
Other[5]	67,942	--	68,710	111,617	64,195	--	55,639	116,809
Grand total	2,283,501	--	2,345,541	936,195	1,926,454	--	1,768,095	906,737

[r]Revised.

[1]Does not include alloys consumed in the making of other ferroalloys.

[2]Includes fused-salt electrolytic low carbon ferromanganese ("massive manganese").

[3]Includes silicon metal, silvery iron, and inoculant type alloys.

[4]Includes chromium briquets, chromium metal, exothermic chromium additives, and other miscellaneous chromium alloys.

[5]Includes ferroboron and other complex boron additive alloys, ferromolybdenum, ferronickel, ferrotitanium, ferrotungsten, ferrovanadium, ferrozirconium, spiegeleisen, and other miscellaneous alloys.

TABLE 12. PRODUCERS OF FERROALLOYS IN THE UNITED STATES IN 1975

Producer	Plant locations	Products[1]	Type of furnace
Airco, Inc., Airco Alloys Div.	Calvert City, Ky Charleston, S.C. Mobile, Ala Niagara Falls, N.Y.	FeCr, FeCrSi, FeMn, FeSi, SiMn.	Electric
Alabama Alloy Co., Inc.	Bessemer, Ala	FeSi	Do.
AMAX Inc., Climax Molybdenum Co. Div.	Langeloth, Pa	FeMo	Metallothermic
Bethlehem Steel Corp.	Johnstown, Pa	FeMn	Blast
Chromasco Ltd., Chromium Mining & Smelting Corp. Div.	Woodstock, Tenn	FeCr	Electric
Diamond Shamrock Corp., Chemetals Div.	Kingwood, W. Va.	FeMn	Fused salt electrolytic.
Englehard Minerals & Chemical Corp.:			
Minerals and Chemicals Div.	Strasburg, Va	FeV	Metallothermic
Philipp Brothers Div. Roane Electric Furnace Co., Inc.	Rockwood, Tenn	FeMn, FeSi, SiMn	Electric
Foote Mineral Company Ferroalloys Div.	Cambridge, Ohio Graham, W. Va. Keokuk, Iowa	FeCrSi, FeSi, FeV, silvery pig iron, other[2]	Do.
Gulf & Western Industries, Inc. New Jersey Zinc Co. Div.	Palmerton, Pa	Spin	Do.
Hanna Mining Co.:			
Hanna Nickel Smelting Co.	Riddle, Oreg.	FeNi, FeSi	Do.
Silicon Div	Wenatchee, Wash	FeSi, Si	Do.

See footnotes at end of table.

TABLE 12 (continued)

Producer	Plant locations	Products[1]	Type of furnace
Interlake Inc., Globe Metallurgical Div.	Beverly, Ohio Selma, Ala	FeCr, FeCrSi, FeSi, Si, SiMn	Do.
International Minerals and Chemical Corp. Industrial Minerals Div.:			
Tennessee Alloys Corp	Bridgeport, Ala	FeSi	Do.
Tennessee Metallurgical Corp.	Kimball, Tenn	FeSi	Do.
Kawecki Berylco Industries, Inc.:			
National Metallurgical Corp. Div.	Springfield, Oreg	Si	Do.
Penn Rare Metals Div.	Revere, Pa	FeCb	Metallothermic
Metallurg, Inc., Shieldalloy Corp.	Newfield, N.J.	FeB, FeCb, FeTi FeV, other[2]	Do.
Molycorp, Inc.	Washington, Pa	FeB, FeMo, FeW.	Metallothermic
Ohio Ferro-Alloys Corp.	Brilliant, Ohio Philo, Ohio Powhatan, Ohio	FeB, FeMn FeSi, Si SiMn.	Electric
Pennzoil Company, Duval Sierrita Corp.	Sahuarita, Arix	FeMo	Metallothermic
Reactive Metals and Alloys Corp.	West Pittsburg, Pa	FeSi, FeTi, other[2]	Electric
Reading Alloys, Inc.	Robesonia, Pa	FeCb, FeV	Metallothermic
Reynolds Metals Company	Sheffield, Ala	Si	Electric
Sandgate Corp., Tenn-Tex Alloy Corp of Houston (leased to Union Carbide Corp.)	Houston, Tex	FeMn, SiMn	Do.

See footnotes at end of table.

TABLE 12 (continued)

Producer	Plant locations	Products[1]	Type of furnace
Sara Corp., Satralloy, Inc. Div.	Steubenville, Ohio	FeCr, FeCrSi FeMn	Do.
Union Carbide Corp., Metals Div.	Alloy, W. Va. Ashtabula, Ohio Marietta, Ohio Niagara Falls, N.Y. Portland, Oreg Sheffield, Ala	FeB, FeCr FeCrSi, FeMn, FeSi, FeV, FeW, Si, Simn, other[2]	Do.
United States Steel Corp	McKeesport, Pa	FeMn	Blast
Ferrophosphorus:			
FMC Corporation, Mineral Products Div.	Pocatello, Idaho	FeP	Electric.
Mobil Oil Corp., Mobile Chemical Co. Div.	Nichols, Fla	FeP	Do.
Monsanto Company, (Monsanto Industrial Chemicals Co.)	Columbia, Tenn Soda Springs, Idaho	FeP	Do
Occidental Petroleum Corp., Hooker Chemical Div. Hooker Chemicals & Plastics Corp.	Columbia, Tenn	FeP	Do.
Stauffer Chemical Co., Industrial Chemical Div.	Mt. Pleasant, Tenn Silver Bow, Mont Tarpon Springs, Fla	FeP	Do.
Tennessee Valley Authority	Muscle Shoals, Ala	FeP	Do.

[1]FeMn, ferromanganese including spiegeleisen and manganese metal: SiMn, silicomanganese, FeMn, ferromanganese; FeMo, ferromolybdenum; FeNi, ferronickel, FeP, ferrophosphorus, FeSi, reffosilicon; Feti, ferrotitanium; FeV, ferrovandadium; Si, Silicon metal; SiMn, Silicomanganese; Spln, spiegeleisen.

[2]Includes specialty silicon alloys, zirconium alloys, and miscellaneous ferroalloys.

TABLE 13. CONSUMPTION BY END USE OF FERROALLOYS AS ADDITIVES IN THE UNITED STATES IN 1975[1] (SHORT TONS OF ALLOYS)

End use	FeMn	SiMn	FeSi	FeTi	FeP	FeB
Steel:						
Carbon	688,241	97,285	141,651	804	9,890	326
Stainless and heat-resisting	10,617	5,808	18,793	1,117	29	18
Other alloy	174,568	37,472	76,656	838	1,298	377
Tool	2,046	15	2,261	W	--	--
Total Steel[2]	875,472	140,580	239,361	2,759	11,217	721
Cast irons	24,582	12,033	346,801	96	4,351	13
Superalloys	628	W	424	585	--	W
Alloys (excluding alloy steels and superalloys)	14,432	3,788	53,452	1,548	201	57
Miscellaneous and unspecified	3,064	4,158	43,203	182	406	2
Total	918,178	160,559	683,241	5,170	16,175	793
Percent of 1974	79	91	e75	70	79	200

e Estimate.

W = Withheld to avoid disclosing individual company confidential data; included in "Miscellaneous and unspecified."

[1] FeMn, ferromanganese including spiegeleisen and manganese metal; SiMn, silicomanganese; FeSi, ferrosilicon including silicon metal, silvery pig iron, and inoculant alloys; FeTi, ferrotitanium including such other forms as scrap titanium metal; FeP, ferrophosphorus including other phosphorus materials; FeB, ferroboron, including other boron materials.

[2] Except for data withheld and for unspecified included under "Miscellaneous and unspecified."

TABLE 14. CONSUMPTION BY END USE OF FERROALLOYS AND ALLOYING ELEMENTS IN THE UNITED STATES IN 1975[1]
(SHORT TONS OF CONTAINED ELEMENTS)

End use	FeCr	FeMo	FeW	FeV	FeCb	FeNi
Steel:						
Carbon	3,743	232	--	818	400	--
Stainless and heat-resisting	119,038	666	43	20	198	17,255
Other alloy	53,041	1,175	34	3,344	728	6,662
Tool	2,547	301	283	413	6	--
Total Steel[2]	178,369	2,374	360	4,590	1,332	23,917
Cast irons	6,462	1,562	2	53	--	509
Superalloys	8,585	151	39	20	180	186
Alloys (excluding alloy steels and superalloys)	4,637	413	52	29	19	708
Miscellaneous and unspecified	3,346	72	--	11	49	5
Total	201,399	4,572	453	4,703	1,580	25,326
Percent of 1974	56	78	45	77	72	55

[1]FeCr, ferrochromium including other chromium ferroalloys and chromium metal; FeMo, ferromolybdenum including calcium molybdate; FeW, ferrotungsten including melting base self-reducing tungsten; FeV, ferrovanadium including other vanadium-carbon-iron ferroalloys; FeCb, ferrocolumbium including small amounts of ferrotantalum-columbium under "Miscellaneous and unspecified," FeNi, ferronickel.

[2]Except for unspecified included under "Miscellaneous and unspecified."

TABLE 15. U.S. EXPORTS OF FERROALLOYS

Alloy	1973 Quantity (short tons)	1973 Value (thousands)	1974 Quantity (short tons)	1974 Value (thousands)	1975 Quantity (short tons)	1975 Value (thousands)
Ferrocerium and alloys	55	$ 286	6	$ 503	50	$ 300
Ferrochromium	15,164	5,091	7,245	r3,765	13,218	9,075
Ferromanganese	8,574	2,137	7,001	2,204	32,487	10,743
Ferromolybdenum	1,112	3,151	2,047	7,094	1,121	4,798
Ferrophosphorus	19,030	773	3,677	408	437	57
Ferrosilicon	15,984	4,051	6,575	3,338	39,712	15,732
Ferrotungsten	6	50	10	215	17	137
Ferrovanadium	1,416	8,734	1,335	7,863	1,018	7,952
Ferroalloys, n.e.c.	22,328	9,485	18,172	12,186	8,970	9,886
Spiegeleisen	1,063	103	547	80	335	208
Total	84,732	33,861	46,715	r37,656	97,365	58,888

rRevised.

TABLE 16. U.S. IMPORTS FOR COMSUMPTION OF FERROALLOYS AND FERROALLOY METALS

Alloy	1974[r] Gross weight (short tons)	1974[r] Content (short tons)	1974[r] Value (thousands)	1975 Gross weight (short tons)	1975 Content (short tons)	1975 Value (thousands)
Chromium alloys:						
Ferrochromium containing 3% or more carbon	116,158	71,319	$ 33,134	257,567	158,055	$135,014
Ferrochromium containing less than 3% carbon	46,527	31,502	22,790	61,242	39,933	55,589
Ferrosilicon-chromium	7,553	(1)	2,045	4,136	(1)	2,041
Total chromium alloys	170,238	XX	57,969	322,945	XX	192,671
Manganese alloys:						
Ferromanganese containing less than 1% carbon	4,165	3,493	1,660	2,786	2,355	2,496
Ferromanganese containing over 1% and less than 4% carbon	42,829	34,803	15,467	34,195	27,893	19,841
Ferromanganese containing 4% or more carbon	374,228	289,578	71,299	360,231	276,402	106,044
Ferrosilicon-manganese (Mn content)	67,751	44,720	20,632	54,723	35,156	22,989
Total manganese alloys	488,978	372,594	109,058	451,935	341,806	151,370
Ferosilicon:						
8% to 60% silicon	28,762	8,480	6,269	15,329	6,182	9,010
60% to 80% silicon	112,556	83,616	59,305	54,026	40,265	32,000
80% to 90% silicon	289	243	165	825	682	764
Over 90% silicon	842	792	762	257	236	176
Total ferrosilicon	142,449	93,131	66,501	70,437	47,365	41,950
Ferronickel	102,430	33,425	87,255	65,046	20,699	67,818
Other ferroalloys:						
Ferrocerium and other cerium alloys	29	(1)	238	17	(1)	187
Ferromolybdenum	41	29	140	2	2	10
Ferrophosphorus	--	--	--	1	(1)	2
Ferrotitanium and ferrosilicon titanium	2,296	(1)	3,122	536	(1)	1,125
Ferrotungsten and ferrosilicon tungsten	505	404	3,029	256	209	2,542
Ferrovanadium	223	144	1,142	179	137	1,435
Ferrozirconium	850	(1)	575	548	(1)	416

See footnotes at end of table.

TABLE 16 (continued)

Alloy	1974[r] Gross weight (short tons)	1974[r] Content (short tons)	1974[r] Value (thousands)	1975 Gross weight (short tons)	1975 Content (short tons)	1975 Value (thousands)
Other ferroalloys: (con.)						
Ferroalloys, n.e.c.[2]	2,490	(1)	$ 7,417	1,745	(1)	$ 6,433
Total other ferroalloys	6,434	XX	15,663	3,284	XX	12,150
Metals:						
Chromium	1,960	(1)	5,388	1,629	(1)	6,630
Manganese	2,506	(1)	1,379	4,378	(1)	4,041
Silicon (less than 99.7% silicon	5,508	5,422	5,809	3,710	3,654	2,705
Base metal alloys[3]	16,577	(1)	12,341	3,980	(1)	3,531
Total	937,075	XX	361,363	927,344	XX	482,866

[r]Revised.

XX = Not applicable.

[1]Not recorded.

[2]Principally ferrocolumbium.

[3]Principally silicon metal, commercial purity.

TABLE 17. 1976 FERROALLOY PRICES FOR BULK QUANTITIES

Alloy	Price in 1975[1] Beginning	Price in 1975[1] Yearend
Charge chromium (66% to 70%)	$ 0.48 - 0.57	$ 0.50
Low-carbon ferrochromium, 0.05% maximum carbon	0.83 - 1.20	0.92 - 1.20
Standard 78% ferromanganese, dollars per long ton of alloy	440	440
Low-carbon ferromanganese, 0.1% maximum carbon	0.595	0.545
Ferromolybdenum, power	3.19	3.50
Ferronickel	1.97	2.16
Ferrosilicon, 50%	0.335	0.325
Ferrosilicon, 75%	0.385	0.365

[1]Per pound contained, except as noted otherwise.

Source: Metals Week.

TABLE 18. FERROALLOYS: WORLD PRODUCTION, BY COUNTRY AND FURNACE TYPE (THOUSAND SHORT TONS)

Country[1] and furnace type	1973	1974	1975
Blast furnace[2]			
Europe:			
Czechoslovakia	80	37	e40
France	600	588	475
Germany, West[3]	405	483	341
Hungary	20	79	101
Italy	72	83	e65
Poland	142	147	e150
Portugal	1	--	--
U.S.S.R.	1,098	1,093	e1,140
United Kingdom	176	100	92
Africa: South Africa, Republic of	64	45	e65
Asia:			
Korea, Republic of[4]	29	38	23
Thailand[4]	--	9	1
Electric Furnace[5]			
North America:			
Canada[2]	221	273	176
Mexico	90	89	95
United States[2]	2,520	2,284	1,926
South America:			
Argentina	48	54	e55
Brazil	188	238	279
Chile	12	16	15
Colombia	--	(6)	(6)
Peru	--	1	1
Uruguay	(6)	(6)	(6)
Venezuela	1	2	2
Europe:			
Austria	r7	7	e7
Belgium	122	144	112
Bulgaria	49	50	e55
Czechoslovakia	134	140	139
Finland	44	58	44
France	r490	495	437
Germany, West	292	312	283
Hungary	11	12	e14
Italy	191	191	199
Norway	r829	964	961
Poland	172	173	174
Portugal	r10	12	e11
Spain[7]	265	293	314

See footnotes at end of table.

TABLE 18 (continued)

Country[1] and furnace type	1973	1974	1975
Sweden	249	236	[e]230
Switzerland[e]	23	23	28
Yugoslavia	170	209	216
Africa:			
Egypt	4	[e]4	5
South Africa, Republic of	[r]547	653	[e]760
Asia:			
India	195	212	192
Japan	2,243	2,499	2,358
Taiwan[e]	15	30	26
Turkey[e]	10	10	10
Oceania: Australia[2 8]	84	84	62
Total	[r]11,873	12,465	11,674

[e]Estimate.

[p]Preliminary.

[r]Revised.

[1]In addition to the countries listed, the People's Republic of China and North Korea are known to produce ferroalloys, but output of these materials are included in estimates for pig iron in the iron and steel chapter, therefore they have been omitted here to avoid duplication, East Germany also is known to produce ferroalloys but it is not clear from source publications whether output has been included together with that of pig iron in the iron and steel chapter. Also Greece, Luxembourg and Southern Rhodesia may produce ferroalloys and output, if any, is also included with pig iron; and Southern Rhodesia may produce ferroalloys and output, if any, is also included with pig iron in the iron and steel chapter.

[2]Blast furnace ferroalloys production by Australia, Belgium, Canada, and the United States included under electric furnace output.

[3]Blast furnace ferromanganese, ferrosilicon and spiegeleisen only; other blast furnace ferroalloys are included with pig iron production in the iron and steel chapter.

[4]Includes electric furnace ferroalloys, if any are produced.

[5]In addition to the countries listed, the United Kingdom and the U.S.S.R. are known to have produced electric furnace ferroalloys and Romania may have produced some electric furnace ferroalloys, but output is not reported and no basis for estimation is available.

[6]Less than ½ unit.

[7]May include small quantities of blast furnace ferroalloys, if any are produced.

[8]Year ended November 30 of year stated.

5.0 PUBLISHED INFORMATION

The purpose of this section is to abstract and condense information generally available from various sources into one document. As such, most of the information has been taken verbatim from the literature. Other comments have been added where necessary to aid in the understanding of the information presented.

This section is primarily devoted to the submerged arc process; however, sections are included on calcium carbide manufacture and electrolytic production of manganese and chromium.

5.1 SUBMERGED ARC FERROALLOY PRODUCTION

Data in this section are segregated, in so far as possible, by published source.

EPA 450/2-74-018a

Processes or Facilities and Their Emissions

1. The Electric Submerged-Arc Furnace Production Process

A typical flow diagram of ferroalloy production is shown in Figure I-1. The major source of pollution is the electric submerged-arc (ESA) furnace which performs the smelting operation. The furnace (Figure I-2) consists of a hearth lined with a high-temperature refractory which has holes to permit tapping (or draining) of metal and slag. The furnace shell and its hood or cover components are fabricated from steel. These are water cooled to protect them from the heat of the process. Above the hearth are three carbon electrodes vertically suspended in a triangular formation. Although these electrodes may be prebaked or of the self-baking, in situ Soderberg type, the trend is to use the Soderberg electrodes.

Electrodes extend three to five feet into the charge materials. Three-phase current arcs through the charge material from electrode to electrode. The charge melts as the electrical energy is converted to heat.

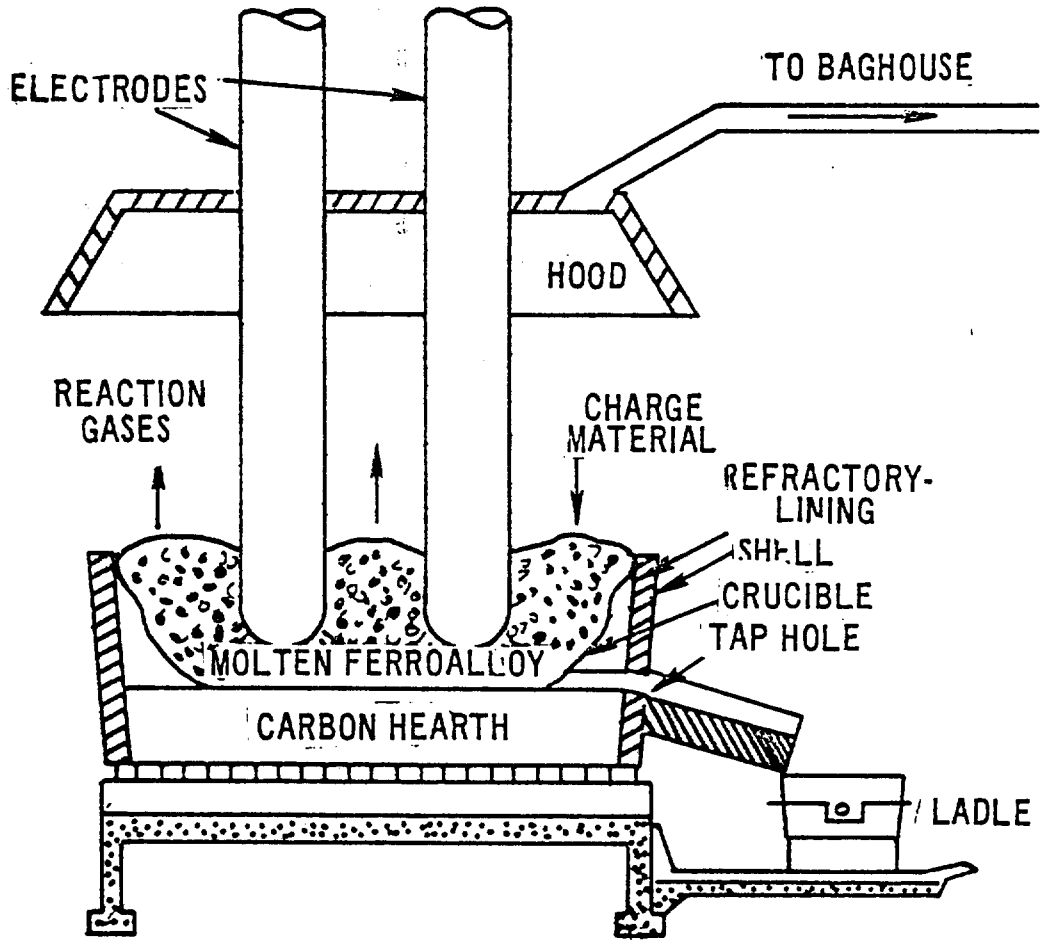

Figure I-2. Submerged-arc furnace for ferroalloy production.

Coke added to the furnace chemically reacts with the oxygen in the metal oxides to form carbon monoxide and reduce the ores to base metal. Large quantities of byproduct carbon monoxide are formed. These reaction gases entrain particulate matter and carry them from the furnace.

Power is applied continuously to the ESA furnace. Feed materials may be charged continuously or intermittently. Molten ferroalloy and slag are intermittently tapped into ladles from ports in the lower furnace wall. (Furnaces producing calcium carbide may be intermittently or continuously tapped.) From the ladles, the melt is poured into molds or casting machines. After the product cools and solidifies, it is crushed, sized, loaded and shipped to customers.

2. Emissions from ESA furnaces

A study of emissions from the United States ferroalloy industry by EPA and The Ferroalloys Association was completed in 1973. During this study, which began before promulgation of the Clean Air Act Amendments of 1970, EPA measured emissions from several ferroalloy furnaces and collected samples of emissions for chemical analysis from open furnaces producing ferrochrome-silicon, silicomanganese, and high-carbon ferrochrome. (Open, semi-enclosed, and sealed furnaces are described in Chapter III of this document.) In addition, metals analyses were performed on samples of manganese ore, chrome ore, and ferromanganese slag used as charge material for a silicomanganese furnace.

No significant concentrations of sulfur dioxide were found in the exhaust gases from five furnaces tested by EPA. SO_2 concentrations ranged from 1 to 17 ppm and emissions did not exceed 7 pounds per hour.[10]

A significant amount of carbon monoxide gas is formed as a byproduct of the ESA reduction process. Depending on the type of furnace, this gas is either burned at the surface of the charge material or captured by the emission control system. If the latter, it may be flared at the stack of the collection device or used for fuel or other chemical processes.

No nitrogen oxides are formed during the carbon reduction of oxidic ores.

Particulate matter emissions, the major pollutant in this industry, may vary from 150 to 2,000 pounds per hour from an uncontrolled ESA furnace. The actual rate depends on:[11]

- The type of alloy produced.
- Choice and size of raw materials.
- Operating techniques.
- Existence of a furnace shutdown or start-up condition.

Chemical analyses of samples of particulate emissions revealed no significant amounts of heavy metals such as mercury, beryllium, cadmium, or arsenic.[12] The physical properties and quantities of particulate matter emitted generally depend upon the alloy being produced, but the particle size is usually below 2 microns. The mass median diameter (the diameter at which 50 percent of the particles by weight are smaller and 50 percent are larger) of emissions from open furnaces producing ferrochrome silicon, silicomanganese, and high-carbon ferrochrome has been measured by EPA as between 0.66 to 1.7 microns.[13]

The type of alloy produced affects the quantity of uncontrolled emissions. Uncontrolled particulate matter emissions from open furnaces tested by EPA (excluding tap fumes) varied from 25 to 144 pounds per megawatt-hour of power consumption for furnaces producing ferrochrome silicon and silicon metal. The uncontrolled particulate matter emission rate will also vary for different grades of a given product. For instance, the rate of uncontrolled emissions will increase with increasing silicon content of the product, so that a furnace will emit more particulate matter when producing 75 percent than when producing 50 percent ferrosilicon.

The type and size of raw material also affects the emission rate. A porous charge promotes uniform gas distribution and furnace operating stability. Very fine materials may promote channelization of gas flow through the furnace charge, and bridging and nonuniform descent of charge materials. Collapse of a bridged area causes a momentary surge of gas which results in unstable furnace operation. Another factor which influences furnace operation and emissions is the volatile content of the charge material, including moisture and undesirable chemicals.

The design of the furnace and its power consumption affect the rate of uncontrolled emissions. A covered or sealed furnace without control is reported to generate less emissions than an equivalent open furnace without control.[14] Uncontrolled emissions from a furnace producing a given alloy

are related to furnace production, which is a function of power consumption.[15] [16]

Differences in operating techniques can also significantly affect the uncontrolled emissions from a furnace.[16] Operation at higher voltages requires the electrodes to be positioned higher, resulting in increased emissions. Poor placement of mix or insufficient feed rate of the mix increases emissions through the open, annular areas around the electrodes of a semi-enclosed furnace. Manufacture of silicon metal requires stoking of the charge to break up crust, permitting uniform evolution of reaction gases, and preventing violent jets of gas emanating from the furnace reaction zone. Emissions can vary depending upon the frequency and adequacy of stoking.

Furnace shutdowns may be caused by broken electrodes, water leaks, tap hole problems, utility failures, and many other reasons. Upon startup after short shutdown periods, uncontrolled emissions return to normal levels in a time period approximately equal to the length of interruption. When starting up a new furnace or one which has been shut down for a long time period, heavier-than-normal uncontrolled emissions may occur for a period varying from a few days to several weeks.

Emissions from existing ferroalloy furnaces are restricted by State regulations. These are all of the process weight type and most are the result of State implementation plans developed pursuant to Section 110 of the Clean Air Act, as amended. Since production rate is a function of the product being manufactured, allowable emissions must be calculated for the particular alloy being produced. For example, allowable emissions from a 30-megawatt furnace located in Ohio producing calcium carbide, silicomanganese, and ferromanganese are about 29, 32, and 46 pounds per hour respectively (0.97 to 1.5 pounds per megawatt-hour furnace power consumption).[17] It is doubtful that these regulations can be attained without control of tapping fumes. Consequently, it would appear that with proper enforcement, the State regulations will require installation of control systems that will minimize emissions during the tapping operation.

[EPA 450/2-74-018a, continued]

III. EMISSION CONTROL TECHNOLOGY

Air pollution from the electric submerged-arc furnace is minimized by good capture of fumes at the furnace and use of an appropriate particulate matter collection device. The three different furnace configurations--open, semi-enclosed, and sealed--strongly affect the efficiency of air pollution control. In each type, the hood or cover above the furnace not only collects emissions but also protects the furnace superstructure and electrode column components. The three types of furnaces and common control devices are discussed below. Emissions from controlled furnaces of each of three types are discussed and compared in Chapter VI, Data to Substantiate a Standard.

A. Open Furnace

The open furnace (Figure III-1) has a water-cooled canopy hood, normally located 6 to 8 feet above the furnace crucible rim. This large opening between the furnace crucible and hood permits large quantities of ambient air to be drawn into the air pollution control system diluting the furnace off-gas by as much as 50 to 1.[18] As the air combines with the hot furnace gases, it combusts the carbon monoxide generated in the furnace. Gas volumes from this type of system range from 100,000 to 400,000 standard cubic feet per minute (scfm).[19] Gas volume can be reduced by decreasing the opening between the furnace and hood. This may be done by adding a skirt to the hood or with chain curtains (lengths of chain hung in close proximity around the perimeter of the hood).

Gas cleaning devices used on open ferroalloy furnaces include high-energy venturi scrubbers, electrostatic precipitators, and fabric filters.

1. Venturi Scrubbers Applied to Open Furnaces

Several designs of venturi scrubbers are used in the United States, but the one most common on open furnaces is the flooded-disc type. Because the particulate matter concentration is relatively low (the result of copious dilution air) and a high proportion of the particulate is submicron,

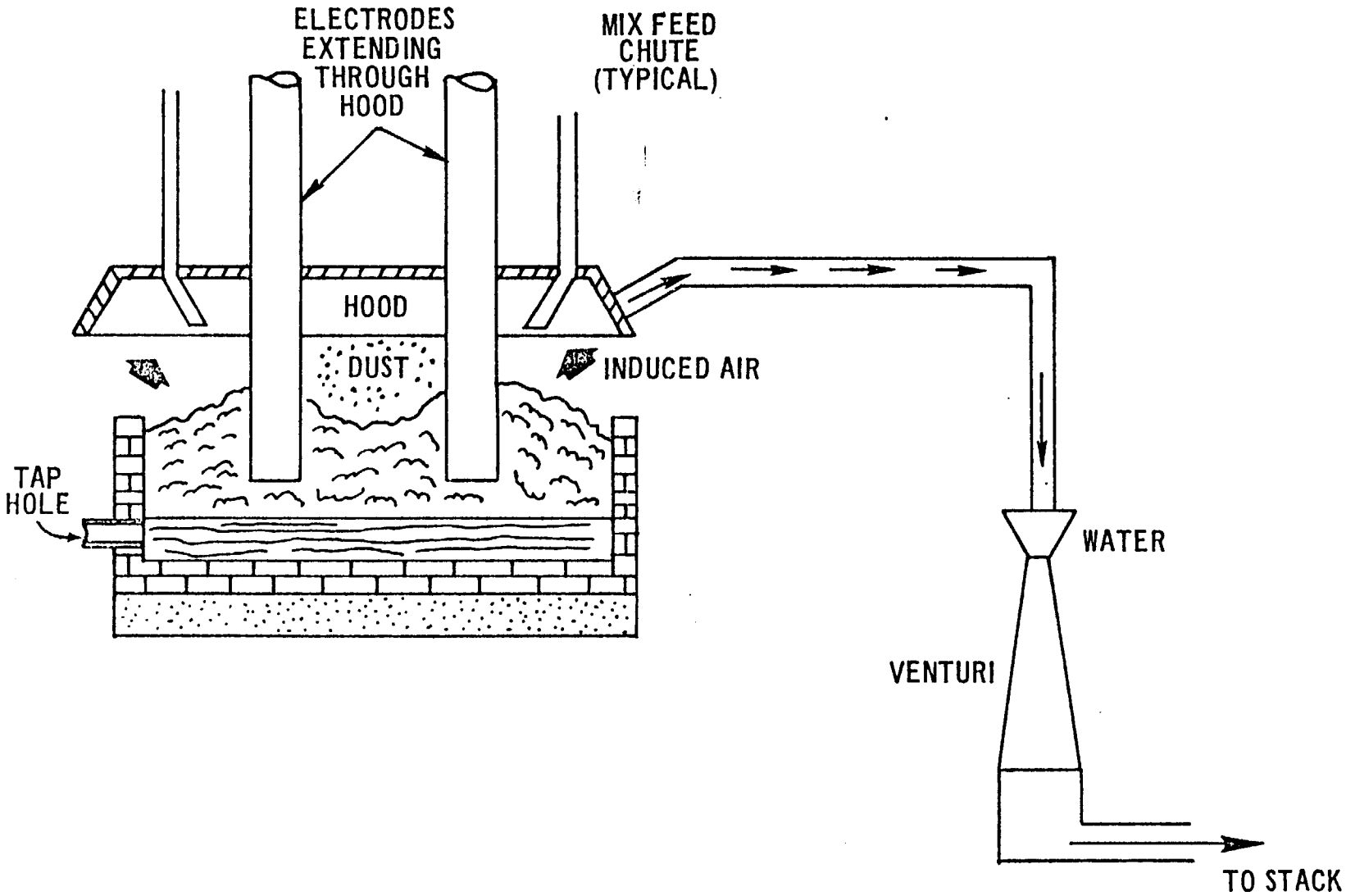

Figure III-1. Open furnace controlled by a venturi scrubber.

these scrubbers must operate with very high pressure losses of 60 to 80 inches water gauge to achieve removal efficiencies of 96 to 99 percent. The venturi scrubber for an open 30-megawatt furnace producing silicomanganese requires 2,500 horsepower for the fan alone. The power required to operate these high-energy scrubbers is equivalent to approximately 10 percent of the power requirements for the furnace itself.[20] [21]

2. Electrostatic Precipitators Applied to Open Furnaces

Only two modern electrostatic precipitators are operating on ferroalloy furnaces in the United States. Both are installed on open furnaces producing chrome alloys.

Most fumes from ferroalloy furnaces do not have proper electrical resistivity for satisfactory precipitator operation unless the gases are humidified and conditioned with agents such as ammonia, or their temperatures are maintained above 500°F.

3. Fabric Filters Applied to Open Furnaces

Fabric filter collectors, also referred to as baghouses or bag filters, are frequently used with open furnaces. The most common type used in the United States is pressurized (fan on the inlet) and exhausts through an open top or monitor. Open grates at the bottom of the baghouse permit cooling by natural convection. Radiant coolers or dilution with cool, ambient air is used if the gas must be cooled before it enters the baghouse. Cooling with water sprays is much less common. Both felted and woven fabrics of many different materials have been used. Cleaning of the bags may be done by either reverse air or mechanical shaking. Air-to-cloth ratios vary between 1.2 and 2 actual cubic feet per minute (acfm) per square foot of cloth area. Because the particulate matter has both a high proportion of submicron particles and high electrostatic charge, the pressure drop across the filter fabric is relatively high, 10 to 18 inches of water.

B. The Semi-Enclosed Furnace

The semi-enclosed furnace (Figure III-2) has a water-cooled cover which contains gas and fume generated in the furnace. These emissions are drawn from beneath the cover through one or more ducts to a gas cleaning device. The cover completely seals the furnace except for annular spaces around the three electrodes through which raw material is charged. The

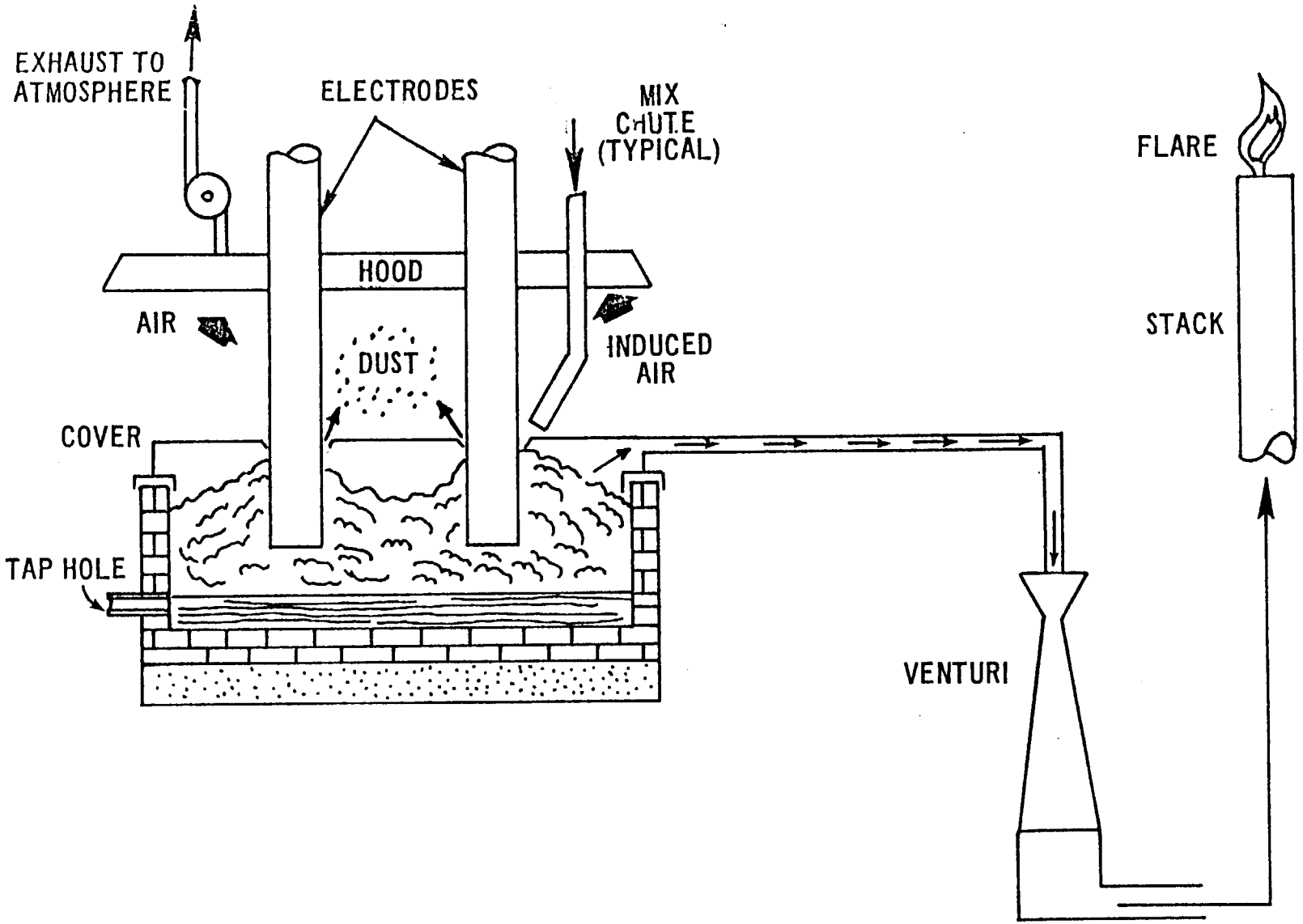

Figure III-2. Semi-enclosed furnace controlled by a venturi scrubber.

feed material only partially closes the annuli and emissions still pass through them. These leaks could be eliminated or minimized in two ways. The air pollution control system could be designed to maintain a negative pressure within the furnace or the emissions could be captured and controlled by hoods around the electrodes.

Because very little air enters a semi-enclosed furnace, the gases from the furnace are rich in carbon monoxide and can be used as fuel.

Semi-enclosed furnaces have not been used to produce silicon metal or alloys containing over 75 percent silicon because of inability to stoke the furnace. Stoking is necessary to prevent crusting and bridging of the charge, and "blows" during production of high-silicon alloys. Crusting and bridging prevent uniform descent of the charge into the furnace and blows may damage the furnace components. "Blows" are jets of extremely hot gas that originate in the high-temperature reaction zone in the vicinity of the electrode tips, and emerge around the electrodes at high velocity.

1. Wet Scrubbers Applied to Semi-Enclosed Furnaces

Wet scrubbers are the most common air pollution control devices applied to semi-enclosed ferroalloy furnaces. Both multistage centrifugal scrubbers and venturi scrubbers are used. Centrifugal scrubbers are generally limited to a maximum air flow of about 2,800 acfm, sufficient for a medium-size semi-enclosed furnace.[22] For larger furnaces, parallel centrifugal scrubbers or a venturi scrubber are used. Depending on the product being made, centrifugal scrubbers may have efficiencies of up to 99 percent; venturi scrubber efficiencies are higher. Pressure losses of up to 80 inches of water are common in venturi scrubbers controlling emissions from semi-enclosed furnaces. Power and water requirements are generally higher for venturis than for centrifugal scrubbers.

Emissions from two semi-enclosed furnaces were measured by EPA. One was a 40 to 50 megawatt furnace which produces 50 percent ferrosilicon and is controlled by a venturi scrubber. The other is a 24 megawatt calcium carbide furnace controlled by a centrifugal scrubber. During these tests, large amounts of dust were emitted from the annular openings at the electrodes. These emissions were not controlled and so reduced the overall control efficiency. Emissions from the scrubber on the furnace producing ferrosilicon

averaged 0.078 pound per Mw-hr (3.6 pounds per hour); however, measurements of fugitive emissions from around the electrodes indicated a total emission rate of about 390 pounds per hour. Emissions from the calcium carbide furnace scrubber averaged 0.017 pound per Mw-hr (0.40 pound per hour); however, measurements of fugitive and tap emissions which were uncontrolled indicated a total emission rate of about 4.0 pounds per Mw-hr (96 pounds per hour) for this furnace. Obviously, the emissions from the electrode ports are of major concern in a semi-enclosed furnace.

2. Electrostatic Precipitators and Fabric Filters Applied to Semi-Enclosed Furnaces.

No known semi-enclosed furnaces are serviced by electrostatic precipitators or fabric filters. Fabric filters, and an electrostatic precipitator in series with venturi scrubbers have been used on sealed furnaces in Japan. The similarity in emissions from semi-enclosed and sealed furnaces seems to imply that these control devices could also be used on semi-enclosed furnaces. However, the semi-enclosed furnace has a less positive seal. Air leaks through the annuli at the electrodes may increase the danger of explosion. This could prevent use of fabric filters or electrostatic precipitators.

C. The Sealed Furnace

The tops of sealed furnaces (Figure III-3) have water-cooled covers which prevent escape of any emissions from treatment by the air pollution control system. Packing is used to seal around the electrodes and charging chutes. No other openings are required since the furnaces are not generally stoked. They are operated with a slight positive pressure to prevent leakage of air into the furnace. The furnace exhaust gas, predominantly carbon monoxide, can be used as fuel.

Because no air enters the furnace, gas volumes to the control device are minimal and can be as little as 2 to 5 percent of that from an open furance of equivalent size. The very low gas volumes result in much lower mass of particulate matter emissions from a controlled sealed furnace than from an equivalent, well-controlled open furnace.

Sealed furnaces have not yet been used to produce silicon metal or alloys containing over 75 percent silicon because of inability to stoke the

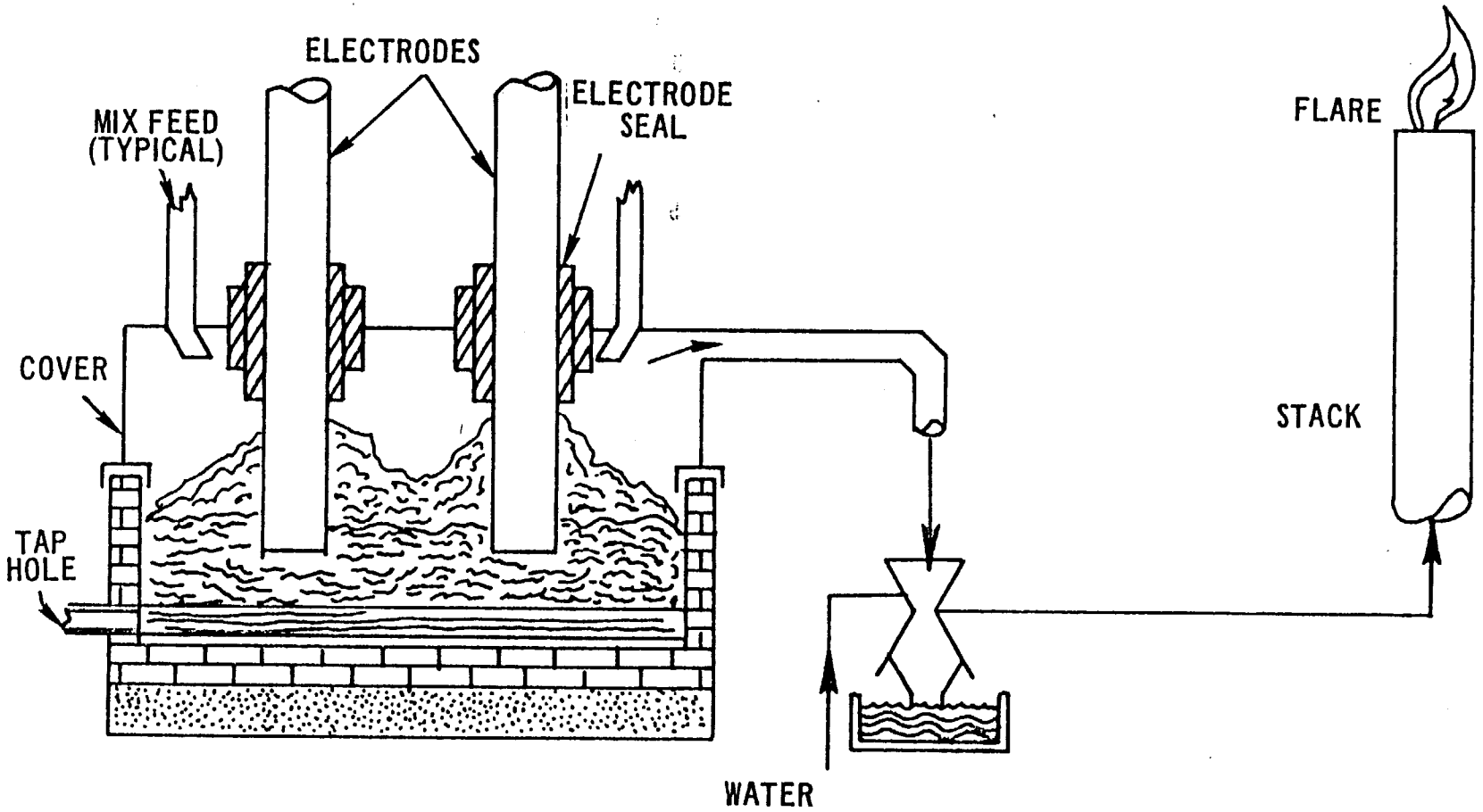

Figure III-3. Sealed furnace controlled by venturi scrubber.

furnace. Stoking is necessary to prevent crusting and bridging of the charge, and "blows" during production of high-silicon alloys.

1. Wet Scrubbers Applied to Sealed Furnaces

Wet scrubbers are the most common device used to control air pollution from sealed furnaces. Both multistage centrifugal and venturi scrubbers are used. Their efficiency and energy requirements for control of sealed furnaces are similar to those for semi-enclosed furnaces.

2. Fabric Filters Applied to Sealed Furnaces

Only one sealed ferroalloy furnace is known to use a fabric filter for air pollution control. The baghouse is a closed suction type cleaned by reverse gas flow. Air-to-cloth ratio is about 1.5 actual cubic feet per minute per square foot of cloth area. Gas from the furnace is cooled in radiant coolers before entering the baghouse. When necessary, additional cooling is obtained by running water over the surface of the radiant coolers.

3. Electrostatic Precipitators Applied to Sealed Furnaces

No applications are known in which electrostatic precipitators alone are used with sealed ferroalloy furnaces. However, systems consisting of two venturi scrubbers and a wet electrostatic precipitator, all in series, have been used to control emissions from three sealed ferroalloy furnaces in Japan. The venturi scrubbers serve as precleaners and gas conditioners and operate at relatively low pressure drops (about 36 inches of water total). The precipitator removes about 97 percent (according to EPA tests) of the particulate remaining in the gas stream after the scrubbers.

D. Control of Fumes During Tapping

Best systems of emission reduction for ferroalloy furnaces of all types include capture and control of tapping fumes. A hood system must be used over the tap hole and ladle to capture and direct tapping fume to a gas cleaning device. The gas cleaning device may be common to that controlling the furnace fume, or a separate fabric filter or wet scrubber.

Efficient capture of tapping fumes has been difficult. One new hood design encloses the ladle during tapping and can be retracted when tapping is complete. When in place, it provides access to the tap hole. This allows the hood to be in place to capture fume generated when the tap hole

is burned open with an oxygen lance, and also allows the tap hole to be rodded during the tap to keep it open. This system provides very good capture of the tapping emissions.

[EPA 450/2-74-018a, continued]

IV. ENVIRONMENTAL EFFECTS

A. Impact on Air Pollution

The objective of standards of performance under Section 111 of the Act, as amended, is to prevent new air pollution problems from developing by requiring affected facilities to use the best systems of emission reduction available at a cost and within a time that is reasonable. These standards pertain directly to emissions from the facility and are only indirectly related to ambient air quality. Attainment and maintenance of national ambient air quality standards is specifically covered by State implementation plans as provided under Section 110 of the Act. Nevertheless, the impact of a new submerged arc ferroalloy furnace on local ambient air quality should be closely investigated. Such an investigation necessarily depends upon many specific factors such as topography, meteorological conditions, proximity of other sources of pollution and the mass of pollutants emitted from all sources in the local area. As an illustrative example, maximum ground-level concentrations of particulate matter were estimated for emissions from five hypothetical sources employing the control systems of interest using an atmospheric dispersion model. These estimates are shown in Table IV-1 for these hypothetical point sources - control system cases. Differing source configurations and surrounding terrain can cause significantly different results. The maximum concentrations were estimated for 24-hour and 1-year averaging periods for particulate matter. These averaging periods were selected to permit direct comparison with the ambient air quality standard for particulate matter. Comparison of these maximum ground-level concentration estimates with the national ambient air quality standard will not necessarily indicate whether or not the standard (NAAQS) will be met unless there is an estimate of background concentration arising from natural and manmade sources available for the specific site. Cases 1 and 3 are based on emissions from a furnace operating in compliance with a

Table IV-1. Estimated Ground Level Particulate Concentrations Caused by Submerged Arc Ferroalloy Furnaces for Various Downwind Distances

Case	Furnace Size, Type, and Product	Control Device	Emission Rate, g/sec	Averaging Times	Estimated Ground Level Particulate Concentration at Specified Distance from Source, $\mu g/m^3$			
					0 Km.	0.3 Km	2.0 Km	20 Km
1	25 Mw, Open, Silicon Metal	Baghouse with Monitor Discharge	2.2	24 hrs.	3000	400	40	4
				1 yr.	400	50	4	0.2
2	25 Mw, Open, Silicon Metal	Baghouse with Monitor Discharge	3.2	24 hrs.	4000	600	60	6
				1 yr.	600	80	6	0.2
3	30 Mw, Open, SiMn	Baghouse with Monitor Discharge	4.0	24 hrs.	6000	800	80	8
				1 yr.	700	100	7	0.3
4	30 Mw, Open, SiMn	Baghouse with Monitor Discharge	1.9	24 hrs.	3000	400	40	4
				1 yr.	300	50	3	0.1
5	30 Mw, Sealed, SiMn	Venturi Scrubber with a 24 meter high stack and flare	0.6	24 hrs.	400	120	11	1
				1 yr.	60	14	1	0.04

typical State process weight regulation. Cases 2 and 4 are based on allowable emissions according to the proposed standards of performance (Chapter II) and Case 5 is based on emissions of 0.07 Kg/Mw-hr, Alternative No. 1, Chapter VIII (Alternative Standards).

The dispersion estimates were made using a Gaussian point source dispersion model developed by Meteorology Laboratory of EPA.

Because the pollutants emit from a monitor (no stack) on a baghouse in Cases 1 through 4, aerodynamic downwash is a chronic problem, particularly when wind speeds exceed 2 or 3 meters per second (mps). At very low wind speeds the plume may rise, although probably not more than 20 meters.

Many of the nation's ferroalloy plants are in valleys in hilly country such as West Virginia and eastern Ohio. Since it was readily available, and the topography and climate are similar to West Virginia and eastern Ohio, one year of hourly wind and surface stability data for Harrisburg, Pennsylvania, was used for the calculations.

Maximum concentrations were estimated immediately downwind of the source, and for distances of 0.3, 2 and 20 kilometers downwind. Because of downwash, the overall maximum concentrations were likely to occur just to the lee of the emissions point. The 24-hour values are estimates of typical high concentrations during any given year. Note that the 24-hour primary national ambient air quality standard (NAAQS) for particulate (260 $\mu g/m^3$) may be exceeded at distances of 0.2 to 1.0 kilometers downwind, depending on the source. The annual NAAQS (75 $\mu g/m^3$) may also be exceeded, although not as far downwind and perhaps not at all when a sealed furnace is used (Case 5).

As an indication of the degree of air pollution reduction achieved by control systems on submerged arc ferroalloy furnaces, the emission rates in Table IV-1 for controlled furnaces can be compared with estimate uncontrolled emission rates of 270 grams per second (39 Kg/Mw-hr) for an open, 25 Mw silicon furnace, and 190 grams per second (23 Kg/Mw-hr) for an open, 30 Mw silicomanganese furnace.

Installation of systems to provide the best air pollution control technology on all new plants will minimize the increase in emissions from growth of the ferroalloy industry. By promulgating standards of performance,

there will be no incentive for a plant to locate in a State which has less stringent standards. Without uniform standards of performance such an indirect inducement by State and local agencies could create concentrations of industry and result in significant deterioration of local air quality.

B. Impact on Water Pollution

The control of air pollution from a ferroalloy plant need not affect water pollution problems at all since fabric filter air pollution control systems require no water. Scrubbers and electrostatic precipitators with wet gas conditioners are potential major sources of water pollution. Although up to 3,500 gallons of water per Mw-hr may be circulated through a scrubber serving an open furnace, normally the water is clarified and recirculated. As a result, the volume of actual wastewater is much less and is only that required to carry the sediment from the clarifier. Because of the much larger volumes of exhaust gas from open furnaces, scrubbers serving them have much larger water requirements than those for semi-enclosed or sealed furnaces. This, of course, necessitates a larger water treatment system for scrubber-equipped open furnaces.

The Environmental Protection Agency promulgated water effluent limitations for the ferroalloy industry on February 22, 1974 (39 FR 6806).[23] For new electric ferroalloy furnaces, the standard limits discharges of water pollutants to levels attained by the "best available technology economically achievable." Typically, chemical treatment, clarifier-flocculators, sand filters, and recirculation would be required to meet the water effluent standards for electric ferroalloy furnaces if scrubbers are used.

C. Impact on Solid Waste Pollution

Increased recovery of particulate matter normally emitted to the atmosphere with the exhaust gases from a furnace can only increase the amount of solid waste for disposal. This increased quantity of solid waste is a function of the efficiency, not the type of the control device. Selection of the type of device will determine if particulate is collected as a wet or dry mass. Although the dry product from a fabric filter may be more prone to re-entrainment than the sludge from a clarifier, it can easily be wetted or pelletized to minimize wind losses during handling.

The domestic industry usually disposes of the collected material as landfill. When this method is used, practices similar to proper sanitary landfill technology may be followed. The principles set forth in EPA's Land Disposal of Solid Wastes Guidelines (CFR Title 40 of Chapter 1, Part 241) may be used as guidance for acceptable land disposal techniques. If hazardous materials are to be disposed of, landfill sites should be selected to prevent horizontal or vertical migration of this contaminant to surface or ground waters. Where geologic conditions may not reasonably ensure this, adequate precautions such as impervious liners should be taken to ensure long-term protection to the environment. The location of solid hazardous materials disposed of in this manner should be permanently recorded in the appropriate office of the legal jurisdiction in which the site is located.

Although most of the dust captured is hauled to a landfill site, other dispositions are possible. In some foreign ferroalloy plants, the dust captured by the control system is pelletized or sintered and returned to the furnace as feed. Some of the dust captured by baghouses serving an open 75 percent ferrosilicon furnace is sold for manufacture of fireproof building materials.

D. Energy Considerations

Because gas volumes from open furnaces are large, power requirements for the air pollution control system are generally high. A typical open furnace control system has a fan of 1,400 to 4,500 horsepower.[24] A venturi scrubber on an open furnace uses approximately 10 percent of the total power supplied to the furnace. Fabric filters or electrostatic precipitators generally require less power since they operate with lower pressure losses. One type of venturi scrubber (by Aeronetics)* is being used on a small, open silicomanganese furnace. It utilizes heat from the furnace exhaust gas and needs comparatively little external power, only about 10 percent of that needed by a conventional venturi type.

---

*References to commercial products are not to be considered in any sense an endorsement of the product by the Government.

Semi-enclosed and sealed furnaces have much lower gas emission rates than open furnaces. Hence, the power requirements for their control systems are usually much lower than those for open furnaces. For example, a control system on a closed furnace would typically need a fan of 100 to 400 horsepower.[25] It is obvious that not only do control systems on closed furnaces require only about 10 percent of the power of those on open furnaces, but the power plant emissions to provide that power are also commensurately less.

The exhaust gases from sealed and semi-enclosed furnaces are rich in carbon monoxide and have significant value. Twenty to 35 percent of the power fed to the furnace can be recovered from the heat of combustion of the gases,[26] which have been used for chemical synthesis and as fuel for dryers, plant boilers, and other process equipment.

Collection and control of tapping fumes are the only areas in which a standard of performance may increase power consumption over present practice, and even this increase is slight. Efficient collection of tap fumes will require 20,000 to 60,000 cfm. If separate collectors or fans are used, they need operate only during tapping and can be shut off at other times to save power. Although relatively few furnaces now have control systems for tap fumes, in many cases these will be necessary to meet requirements of State implementation plans.

[EPA 450/2-74-018a, continued]

VI. DATA TO SUBSTANTIATE A STANDARD

A. Concentration and Mass Data

Results of emission measurements conducted by EPA and other data on emissions from controlled ferroalloy furnaces are shown in Figures VI-1 through VI-6. Brief descriptions of each facility for which emission data were obtained and tables summarizing the data are in a separate document, Background Information for Standards of Performance: Electric Submerged-Arc Furnaces for the Production of Ferroalloys Volume 2, Test Data Summary.

Figures VI-1 and VI-2 show results of measurements of particulate matter emissions from sealed ferroalloy furnaces. Data for Furnaces A1, A2, B, S, R, and K were obtained by EPA on tests conducted in Norway and Japan. Furnaces A1 and A2 are the same. During runs designated A1, only one venturi scrubber was operated, whereas during runs designated A2, a second one was put in service, providing two separate but identical venturi scrubbers operated in parallel. Data for Furnaces D, E, F, I, J, and H are results of tests conducted by Japanese companies using the Japan Industrial Standard Test Method.[41] This Method specifies use of a filter with at least 99 percent collection efficiency. The test method used to obtain emission data on Furnace G, a Russian facility, is unknown.[42]

Average particulate matter emissions from sealed furnaces ranged from 0.002 gr/dscf to 0.032 gr/dscf and from 0.002 lb/Mw-hr to 0.036 lb/Mw-hr, not including tapping fume. Fugitive emissions escaped at the electrode seals of Furnace K during the tests. These emissions could not be measured quantitatively; however, other sealed furnaces were observed to operate with no fugitive fumes at the electrode seals.

Two semi-enclosed Furnaces (C and P) were tested by EPA. Data from these tests are shown in Figures VI-3 and VI-4. Outlet loadings from the control devices of Furnaces C and P averaged 0.030 gr/dscf and 0.058 gr/dscf (0.017 lb/Mw-hr and 0.078 lb/Mw-hr) respectively, not including tapping

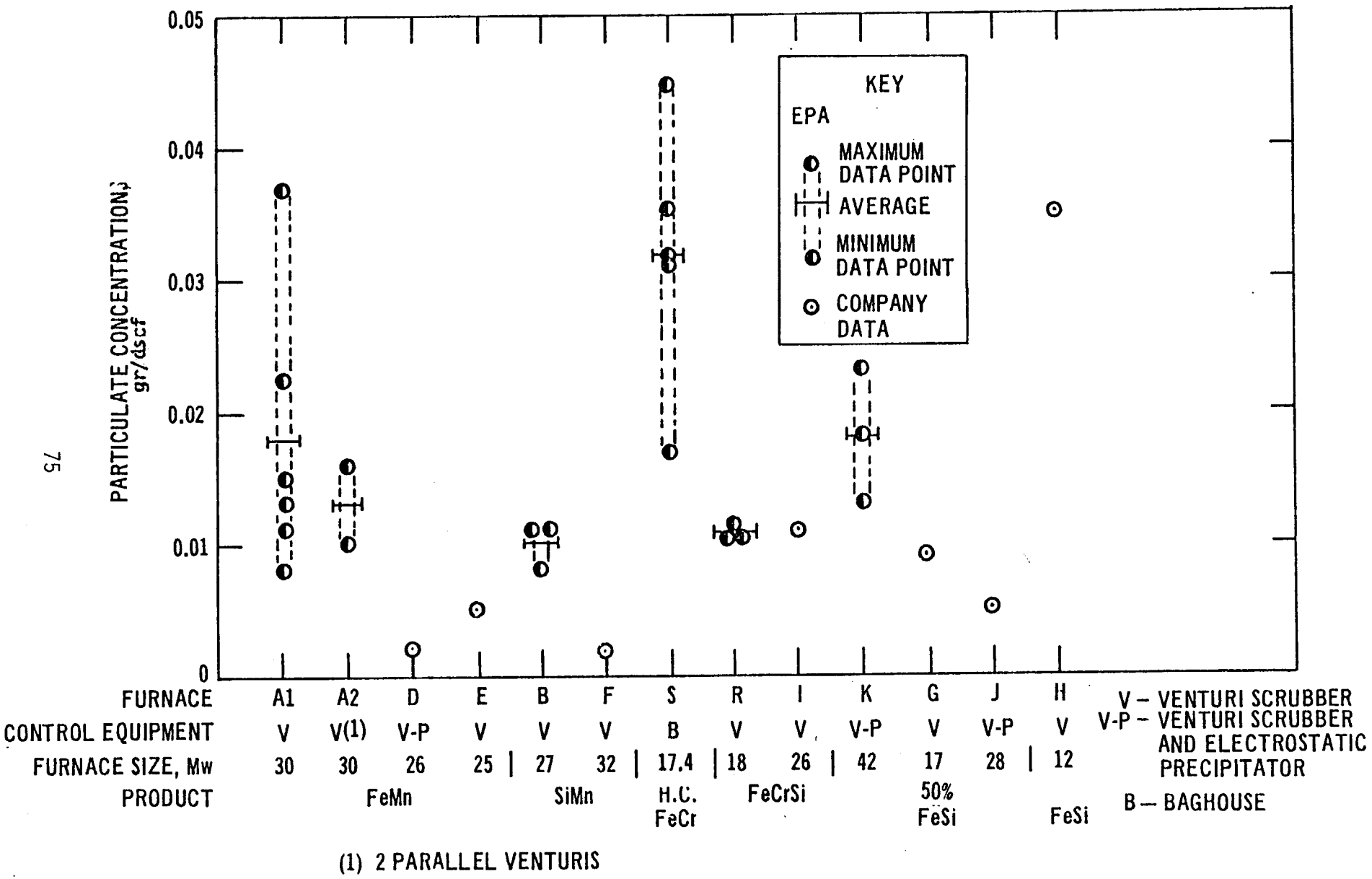

Figure VI-1. Particulate concentrations in control system exhaust from sealed electric submerged-arc furnaces producing ferroalloys.

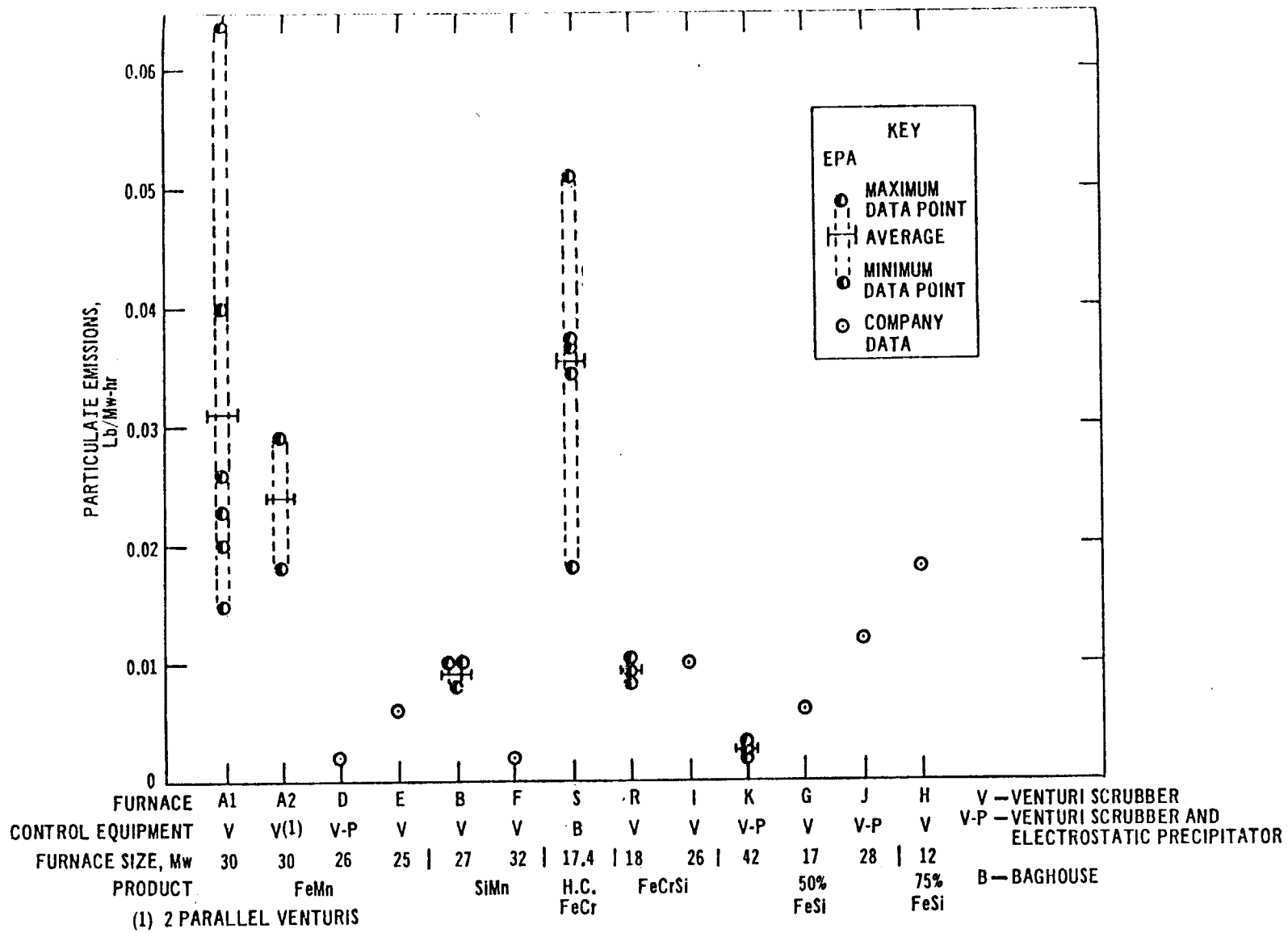

Figure VI-2. Particulate emissions (excluding tapping fumes and fugitive fumes) from sealed electric submerged-arc furnaces producing ferroalloys.

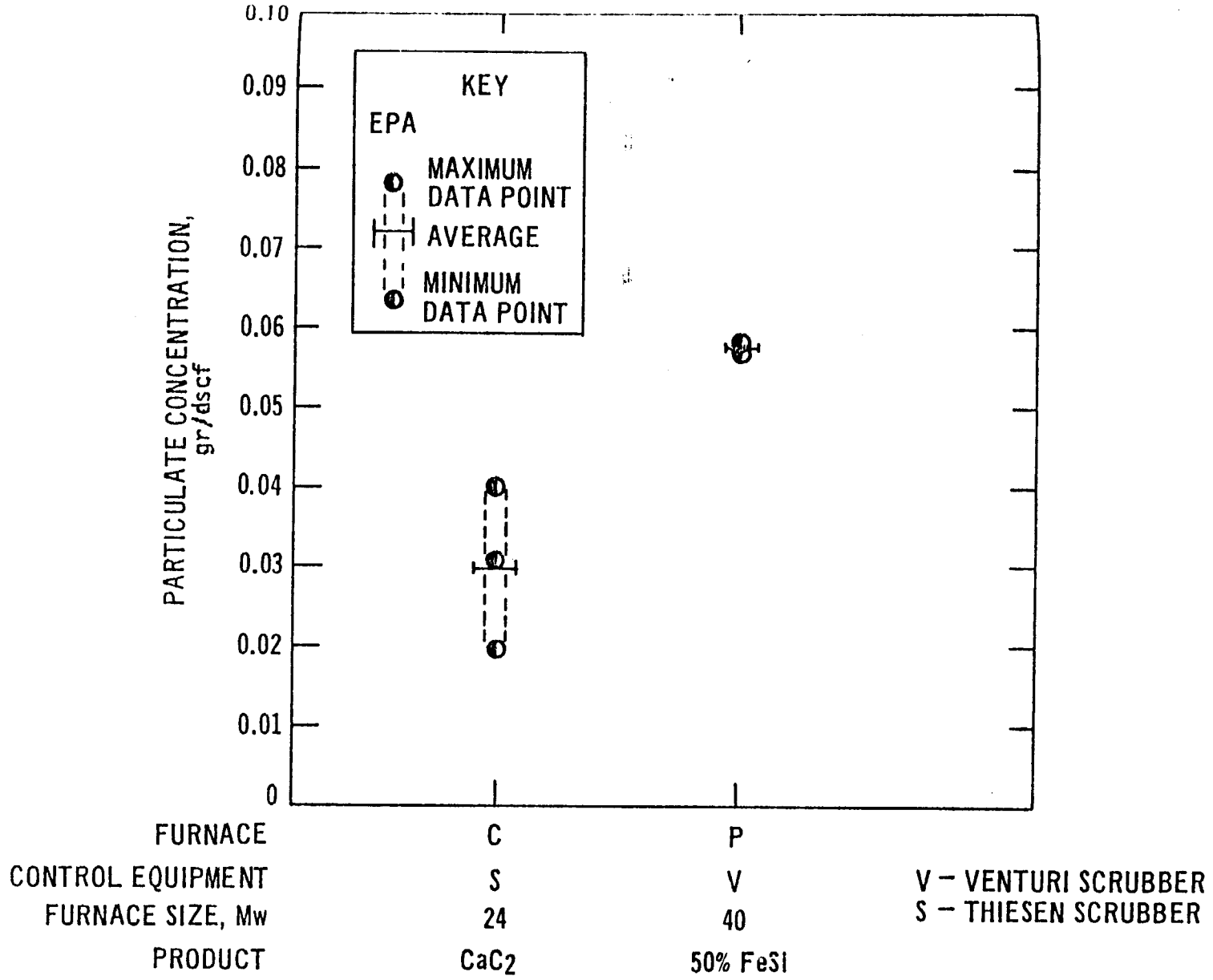

Figure VI-3. Particulate concentrations in control system exhaust from semi-enclosed electric submerged-arc furnaces producing ferroalloys.

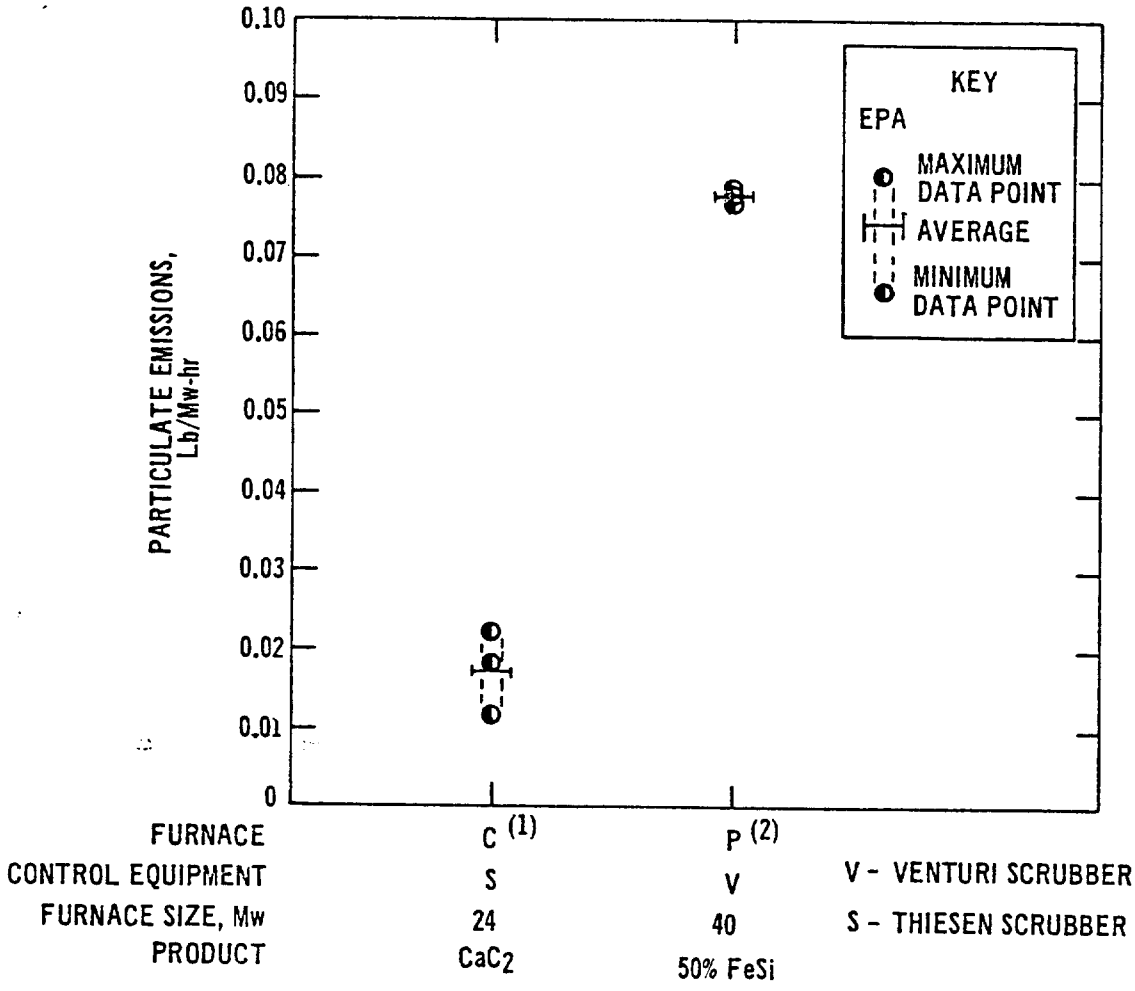

(1) DOES NOT INCLUDE 48.2 lb/hr UNCONTROLLED FUGITIVE FUMES FROM AROUND THE ELECTRODES.

(2) DOES NOT INCLUDE 388 lb/hr UNCONTROLLED FUGITIVE FUMES FROM AROUND THE ELECTRODES.

Figure VI-4. Particulate emissions (excluding tapping fumes and fugitive fumes) from semi-enclosed electric submerged-arc furnaces producing ferroalloys.

emissions or those which emanate from the annular openings around the electrodes. Particulate matter emissions from around the electrodes were measured as 48 lb/hr (2.0 lb/Mw-hr) for Furnace C and 390 lb/hr (8.3 lb/Mw-hr) for Furnace P.

Emissions from the spaces around the electrodes of semi-enclosed furnaces are much greater than controlled emissions from the control device. Hoods and ducts could conceivably be installed to capture fumes from the spaces around the electrodes and send them to a control device. If a control device with 99 percent overall efficiency had been used on these emissions for the furnaces tested, total emissions (excluding those from tapping) would have been 0.037 lb/Mw-hr and 0.16 lb/Mw-hr for Furnaces C and P respectively. These values are well below typical emissions from controlled open furnaces.

Emission data obtained by EPA on open ferroalloy furnaces are shown in Figures VI-5 and VI-6. Furnaces U and O are in Japan. L1, L2, and L3 are the same furnace for which the energy loss across the venturi scrubber was 57, 47, and 37 inches water gauge, respectively. Average emissions ranged from 0.0010 gr/dscf to 0.079 gr/dscf, or from 0.035 lb/Mw-hr to 1.5 lb/Mw-hr. Where noted, the data in Figures VI-5 and VI-6 include fume captured in a tapping hood and ducted to the furnace control device. Capture efficiency for these tapping hoods was estimated as 20 percent for Furnace N and 80 percent for Furnaces T and U. Estimated capture efficiencies of the furnace hoods ranged from 95 to 100 percent.

The data presented in Figures VI-1, 3, and 5 present a wide variation in particulate matter concentrations, but no correlation with furnace configuration can be drawn because data for all three types of furnaces have similar variations and span roughly the same range of values. From this, one can conclude that a standard restricting the concentration of particulate matter is not a good choice since it cannot mandate the sealed furnace, which obviously provides better overall emission control. The data show that mass emissions in terms of lb/Mw-hr do vary significantly with the type of furnace. Mass emissions from semi-enclosed furnaces with uncontrolled emissions from the annular spaces around the electrodes are highest. Open furnaces with efficient control have the next highest emissions.

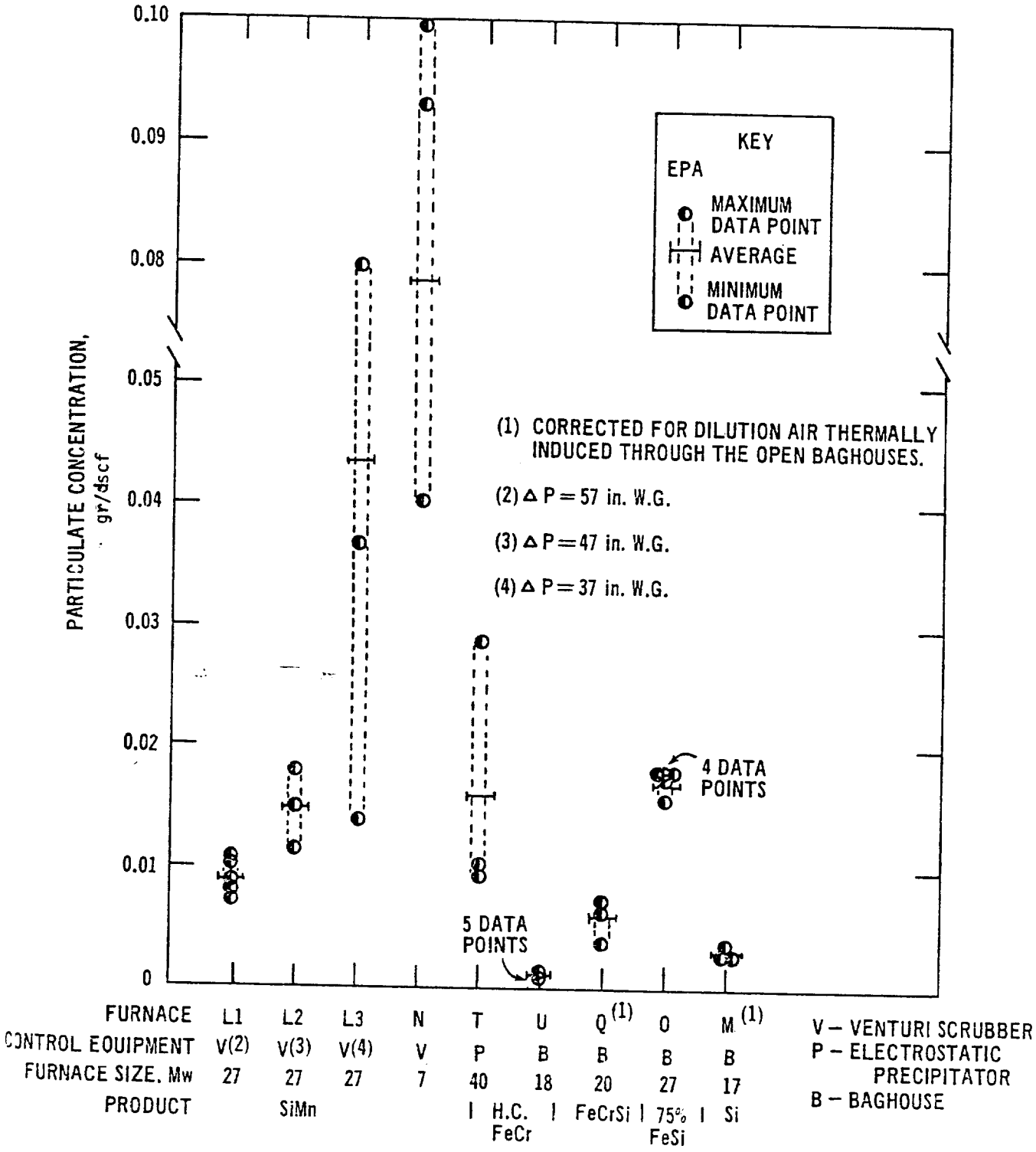

Figure VI-5. Particulate concentrations in control system exhaust from open electric submerged-arc furnaces producing ferroalloys.

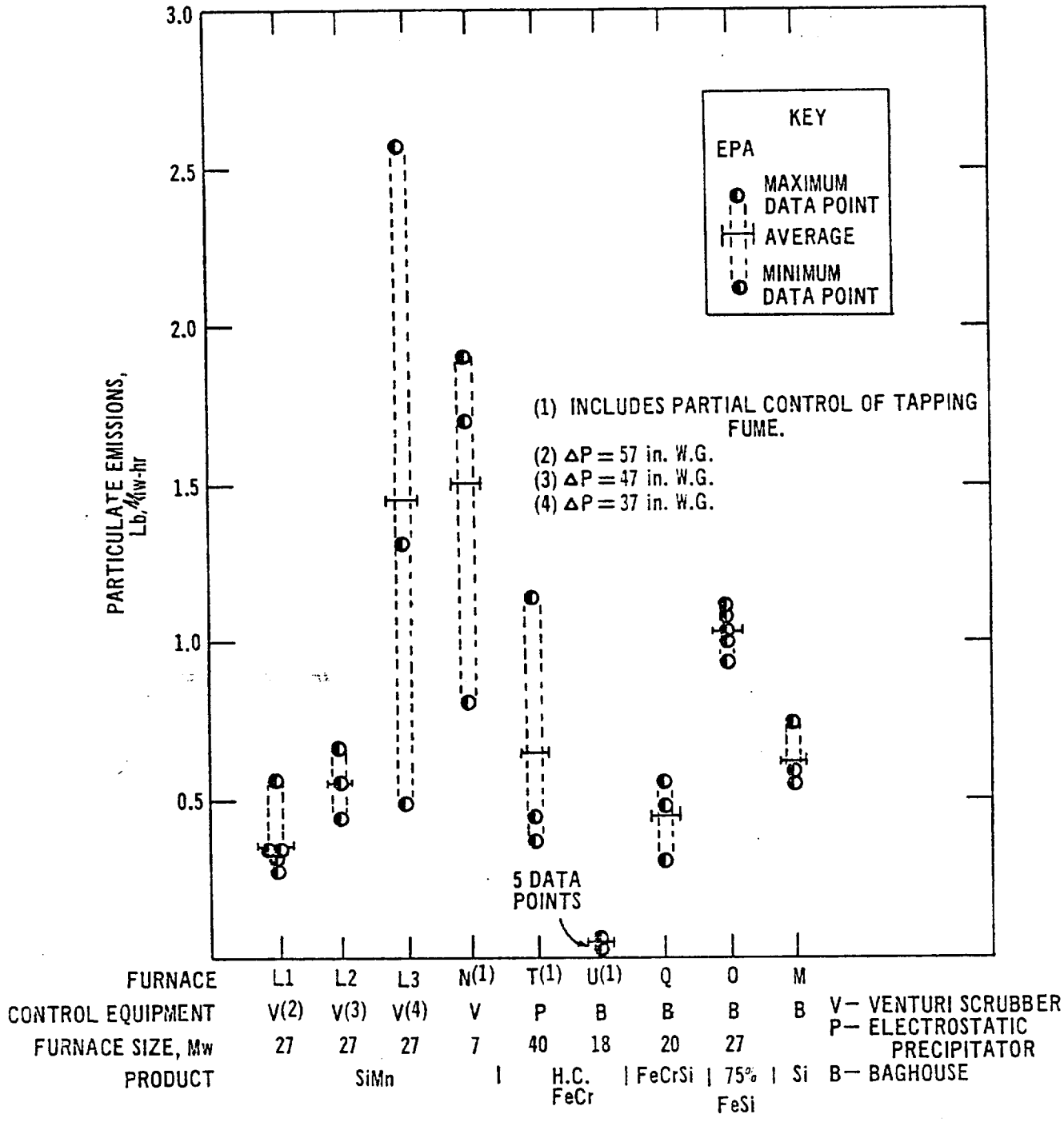

Figure VI-6. Particulate emissions from open electric submerged-arc furnaces producing ferroalloys.

Sealed furnaces have the lowest mass emissions and emissions from semi-enclosed furnaces which capture and efficiently control electrode emissions appear to be intermediate between open and sealed furnaces.

No measurement was made of emissions from a tapping operation with an independent control system because none was found from which they could be measured with reasonable accuracy. They were measured at three furnaces where the tapping hoods exhausted directly into the atmosphere without control. Average uncontrolled tapping emission rates were 48 lb/hr for Furnace C, 53 lb/hr for Furnace L, and 82 lb/hr for Furnace P for the duration of tapping. Furnace C is continuously tapped. If tapping emission rates for Furnaces L and P were averaged over the entire furnace cycle instead of only the tapping period, tapping emission rates would be reduced to about 18 lb/hr and 16 lb/hr, respectively. Capture efficiency of the tapping hood was very good on Furnace C and was estimated as 75 percent on Furnace P. Hood capture efficiency was not estimated for Furnace L. At other plants, tapping hoods with apparent 100 percent capture efficiency have been observed.

Based on measurements of emissions from furnaces where tapping emissions are not controlled and observation of furnaces which very effectively capture tapping emissions, calculation methods have been used to determine the equivalent emissions from a furnace at which tapping emissions are captured and ducted to an efficient control device. To determine the effect of including tapping fumes, a conservatively high value of 150 lb/hr of uncontrolled tapping emissions was assumed. If these are completely captured and enter a control device with 99 percent efficiency, emissions from tapping a 30-Mw, continuously tapped furnace would be 0.05 lb/Mw-hr. Continuously tapped furnaces are not common except for calcium carbide.

EPA-450/2-74-018b

INTRODUCTION

This report summarizes the source test results and visible emission measurements cited in Background Information for Standards of Performance: Electric Submerged Arc Furnaces for Production of Ferroalloys, Volume 1, Proposed Standards. This volume describes the tested facilities (their operating conditions, characteristics of the exhaust gas streams, and deviations from prescribed test procedures) and summarizes the results of the particulate matter and carbon monoxide tests.

Facilities are identified by the same coding used in Volume 1. For example, Table 1 summarizes results of the August 1972 tests of an electric submerged arc furnace producing ferromanganese, Facility A1. These same results are also plotted as Furnace A1 in Figure VI-1 of Volume 1.

Many of the tests summarized herein were conducted using EPA Reference Method 5 for determination of particulate matter from stationary sources. In these cases additional measurements were made to evaluate materials that condense and are collected in the impingers as the gases are cooled. In the summaries, the "probe and filter catch" is the particulate emission measurement used in the figures in Volume 1, and is the basis of the standard. The "total catch" includes the probe and filter catch plus material collected in the impingers.

The other known test method used, the Japanese Industrial Standard Test Method, does not use impingers.* Particulate matter is collected on a filter having a collection efficiency of 99 percent. In this sense, the particulate catch is analogous to the "probe and filter catch" of EPA Reference Method 5.

Note: Any reference in this report to commercial products by name does not constitute an endorsement of the product by the Environmental Protection Agency.

*Japanese Industrial Standard Association, "Methods of Measuring Dust Content in Stack Gas," JIS Z 8808-1970.

Summary of Test Data

A program was undertaken by EPA to evaluate the best particulate matter control techniques available for controlling emissions from electric submerged arc (ESA) furnaces producing ferroalloys and calcium carbide. The data obtained serve as the basis for standards of performance for ferroalloy furnaces being proposed under Section 111 of the Clean Air Act as amended. Fourteen ESA furnaces with air pollution control were tested using EPA Method 5 for determination of particulate matter. These data are supported by reported emission data from seven additional electric submerged arc furnace facilities. Visible emission data were obtained for two additional ESA furnaces with air pollution control. Additional background information was available from the EPA-TFA joining study of atmospheric emissions from the ferroalloy industry.

Of the fourteen controlled furnaces tested using Method 5, seven were open furnaces, two were semi-enclosed, and five were sealed. A variety of control systems were used on these furnaces. Data reported by ferroalloy producers represent emissions from wet scrubber or wet scrubber and electrostatic precipitator control systems.

All data are graphed for visual comparison in Figures 1 through 6.

Description of Facilities

A1. Sealed electric submerged arc furnace producing ferromanganese, 30-MW design capacity, equipped with two identical, parallel, three-stage Warkaus venturi systems. Only one of the parallel venturi systems was operated during this test series. Water flowrate to the venturi was approximately 225 gallons per minute. Water was not recirculated to the scrubber. No fan is used for the venturi system. Aspiration of gases is provided by water injection at the venturi. Average furnace power input during the test periods was 26 MW. Tested by EPA using Method 5 with the single exception that the probe was not heated.

A2. Sealed electric submerged arc furnace producing ferromanganese. This is the same facility as A1 except tests were performed with both the parallel venturi systems operating. Average furnace power input during the test periods was 27 MW. Tested by EPA using Method 5 with the single exception that the probe was not heated.

B. Sealed electric submerged arc furnace, producing silicomanganese, 27-MW design capacity, equipped with a venturi type gas conditioner followed by a series venturi scrubber. The gas conditioning venturi operated at about 2 inches of water pressure drop. The second (series) venturi operated at a pressure drop of approximately 50 inches of water. River water was used for the scrubbers and was not recirculated. Combined water flowrate to both venturis was estimated as 355 gallons per minute. Average furnace power input during the test periods was 23 MW. Tested by EPA using Method 5 with the single exception that the probe was not heated.

C. Semi-enclosed electric submerged arc furnace producing calcium carbide, 24-MW design capacity, equipped with a Buffalo Forge centrifugal type scrubber. Scrubber water flowrate was 450 gallons per minute. Average furnace power input during the test periods was 23.8 MW. Tested by EPA using Method 5 with the exception that sampling was performed at only one point (stack center). Fumes emitted from the annular spaces around the electrodes are captured by secondary hoods and emitted uncontrolled to the atmosphere. These emissions were measured using EPA Method 5 except that sampling times were less than 2 hours. Tapping fumes are also captured in a hood to be emitted uncontrolled to the atmosphere. The tapping fumes were measured using EPA Method 5 except that only one traverse direction was used and sampling times were less than 2 hours.

D. Sealed electric submerged arc furnace producing ferromanganese, 25-MW design capacity, equipped with two identical parallel venturi systems followed by a common series 25,000 kilovolt wet electrostatic precipitator. One of the two parallel venturi systems is normally operated while the other is used as a standby system. Each of the parallel venturi systems consists of a primary and secondary venturi scrubber in series. Pressure drop across each venturi is approximately 10 inches of water and water flowrate to each venturi is 160 gallons per minute. Tested by the company using the Japanese Industrial Standard test method.

E. Sealed electric submerged-arc furnace producing ferromanganese. Average furnace power input is 25 MW. The air pollution control system consists of six parallel shaft kilns each followed by series venturi scrubbers which then manifold the gas stream in common to series Thiesen scrubber followed by a series demister. Pressure drop across each venturi

is approximately 12 inches of water. Tested by the company using the Japanese Industrial Standard test method.

F. Sealed electric submerged arc furnace producing silicomanganese. Average furnace power input is 29 MW. The air pollution control system and test method are identical to those for Furnace E.

G. Closed top electric submerged-arc furnace for the production of 45 percent ferrosilicon. Calculated furnace size is 17 MW.* The air pollution control system consists of a wet inclined duct, a scrubber, and an atomizing pipe with a 3.5 inch diameter throat. Total system water flowrate is 185 gallons per minute at a system pressure drop of 80 inches of water. Test method is unknown.

H. Sealed electric submerged-arc furnace for the production of 75 percent ferrosilicon. Average furnace power input is 12 MW. The furnace is equipped with two parallel venturi scrubbers followed by a common series mist eliminator. Total water flowrate is approximately 500 gallons per minute and the pressure drop across each venturi is approximately 12 inches of water. Tested by the company using the Japanese Industrial Standard test method.

I. Sealed electric submerged-arc furnace for the production of ferrochrome silicon. The furnace is designed for operation at 26 MW, and is equipped with two series venturi scrubbers followed by a mist eliminator. Total pressure drop across both venturi scrubbers is approximately 58 inches of water. Total water flowrate to both venturi scrubbers is approximately 400 gallons per minute. Tested by the company using the Japanese Industrial Standard test method.

J. Sealed electric submerged-arc furnace for the production of 50 percent ferrosilicon. The furnace is designed for operation at 25 MW, and is equipped with two series venturi scrubbers followed by a series mist eliminator and a series wet electrostatic precipitator. Water flowrate to each venturi and to the electrostatic precipitator is approximately 100 gallons per minute.

---

*Dobrayakov, G. G., Serebryakov, M. Z., and Rychkov, V. P., "Operation of a Gas Cleaning System on a Closed Top Electric Furnace," Steel in the U.S.S.R., page 2, May 1971.

Pressure drops across the first and second venturi are approximately 12 and 24 inches of water, respectively. Tested by the company using the Japanese Industrial Standard test method.

K. Sealed electric submerged-arc furnace producing 50 percent ferrosilicon. The furnace is designed to operate at 42 MW. During testing, the furnace operated at an average of 31 MW. The air pollution control system is the same type as for furnace J. Tested by EPA using Method 5 with the exception that only the filter was heated.

L1. Open electric submerged-arc furnace producing silicomanganese. Furnace load during the tests averaged 25.1 MW. The air pollution control system consists of a hood and two parallel venturi scrubbers exhausting to a single stack. Venturi pressure drop was 57 inches water gauge. Between 1,160 and 1,260 gallons per minute of scrubber water was supplied to each scrubber. Tested by EPA using Method 5 except that sampling was done only on one stack diameter and two of 18 traverse points could not be reached by the probe.

L2. The same furnace and test method as in L1 above. Scrubber pressure drop was 47 inches water gauge and average furnace power load was 27.3 MW during these tests.

L3. The same furnace and test method as in L1 and L2 above. Scrubber pressure drop was 37 inches water gauge and average furnace power load was 27.5 MW during these tests.

M. Open 17-MW, Packet-type electric submerged-arc furnace producing silicon metal. The air pollution control system consists of three parallel open pressure baghouses having monitor discharges. Samples were collected using four EPA Method 5 particulate trains operated simultaneously, each measuring emissions from 1/4 of the baghouse monitor area. Three of these areas were sampled at 6 "traverse" points, while the fourth was only sampled at 2 "traverse" points because of unavailability of a longer probe. Sampling was not isokinetic. Because of a leak in one bag in one compartment, test results for the train using only two traverse points were high and were omitted. Each baghouse has open grates at the tube sheet level to allow ambient air to circulate and cool the bags. Air thermally induced through these grates was measured in every other compartment of all three baghouses

using rotary vane anemometers, and total induced air flow was estimated. Total inlet gas flow from the furnace to the three baghouses was also measured. Five percent of the total inlet gas flow was found to result from leakage of fume from a second silicon furnace past a closed damper into the control system. Particulate matter emissions for each run were obtained as the product of the average grain loading resulting from emissions from the one baghouse and the total gas flow to the three baghouses.

N. Open 7- to 9-MW nominal capacity electric submerged-arc silicomanganese furnace. Furnace load during the tests was 7.2 MW. The air pollution control system consists of a furnace hood, a tapping hood having an estimated capture efficiency of 20 percent, and an Aeronetics scrubber. Fume from both the furnace and tapping hood is discharged through the scrubber. Scrubbing water was supplied at 82 gallons per minute. Tested by EPA using Method 5 except that only 24 traverse points were used instead of 36 as called for by standard criteria.

O. Open 36-MW nominal capacity electric submerged-arc furnace producing 75 percent ferrosilicon. During testing, the furnace load averaged 22.3 MW. The air pollution control system consists of a hood, settling chamber, and closed pressure bag filter with three stacks. Tested by EPA using Method 5 except that the probe and filter were not heated. Sampling was performed on one stack only, and air flows were measured on the other two stacks. Total emissions were calculated as the product of particulate concentrations as determined on one stack and total air flow to the baghouse.

P. Semi-enclosed 40- to 50-MW nominal capacity electric submerged-arc furnace producing 50 percent ferrosilicon. Average furnace load during the tests was 46.5 MW. Air pollution control is achieved using two parallel venturi scrubbers operating at pressure drops of 70-80 inches water gauge. Water flow rates are 302 gallons per minute and 422 gallons per minute to the two scrubbers, respectively. Both scrubbers exhaust to a common stack where the gas is flared. Tested by EPA using Method 5 except that the probe and filter were not heated and separate test trains were used for traverses along each of the two axes. Fumes emitted through the annular spaces around the electrodes are captured by a secondary hood and passed directly to the atmosphere. These fumes were measured using EPA Method 5.

Tapping fumes are also caught in a hood to be emitted uncontrolled to the atmosphere. The tapping fumes were measured using EPA Method 5 except that only one traverse direction was used. Tests of the fumes emitted through the annular spaces around the electrodes and from tapping were conducted about 5 months before tests of the emissions from the venturi scrubbers' exhaust stack.

Q. Open electric submerged-arc furnace producing ferrochrome silicon. The furnace load was 20 MW during the tests. Air pollution control is by a hood, spark arrestor, indirect air cooler, and an open pressure baghouse with a monitor discharge. Tested by EPA using Method 5 except that sampling was not isokinetic, and samples were obtained simultaneously by three trains, each evenly spaced along the length of the monitor and each sampling at one point throughout the test.

R. Sealed 26-MW nominal capacity electric submerged-arc furnace producing ferrochrome silicon. During tests, the average furnace load was 18.6 MW. Two venturi scrubbers and a wet cyclone in series provide air pollution control. Venturi pressure drops are about 8 and 80 inches water gauge, respectively, for the first and second venturis. Tested by EPA using Method 5 except that the probe was not heated, the filter was heated only during runs 2 and 3, and it was necessary to split the test train by fastening the filter holder to the end of the probe and connecting the filter to the impingers with a flexible tube.

S. Sealed electric submerged arc furnace producing high carbon ferrochrome. The average furnace load during the tests was 18.0 MW. A closed suction baghouse and flare are used for air pollution control. Tested using EPA Method 5 except that the probe and filter were not heated.

T. Open 40-MW nominal capacity electric submerged-arc furnace producing high carbon ferrochrome. The average furnace load during the tests was 32.7 MW. The air pollution control system consists of a furnace hood, a separate tapping hood having an estimated collection efficiency of 80 percent, a gas conditioning tower, and a 78,000 volt electrostatic precipitator. Fume from both the furnace and tapping hood is discharged through the precipitator. Tested by EPA using Method 5.

U. Tightly hooded open furnace producing high carbon ferrochrome. During tests, the furnace power load averaged 15.0 MW. The air pollution control system consists of the furnace hood, an efficient tapping hood, and a closed pressure bag filter with three stacks. Fumes from both the furnace and the tapping hood are exhausted to the bag filter. Tested by EPA using Method 5. Sampling was performed on one stack only, and air flows were measured on the other two stacks. Total emissions were calculated as the product of particulate concentration as measured on one stack and total air flow through all three stacks.

V. Open 20-MW nominal capacity electric submerged-arc furnace producing silicomanganese. Only visible emission readings were obtained at this facility. The average furnace load during the readings was about 18 MW. The air pollution control system consists of a hood, a separate tapping hood, and an open pressure baghouse having a monitor discharge. Fume from both the furnace and tapping hood is discharged through the baghouse.

W. Open 19- to 21-MW electric submerged-arc furnace producing silicon metal. Only visible emission readings were obtained at this facility. The average furnace load during the readings was about 19.5 MW. The air pollution control system consists of a hood, a separate tapping hood, a set of hairpin gas coolers, and an open pressure baghouse having a monitor discharge. Fume from the tapping hood is discharged beneath the furnace hood where it is captured and conducted to the baghouse with the rest of the fume.

[EPA-450/2-74-018b, continued]

FACILITY V
SUMMARY OF RESULTS
(Visible emissions only)

Visible emissions were read at this facility on February 26, 1974.

Visible emissions from the baghouse monitor did not exceed 25 percent opacity, but visible emissions occurred quite steadily at 5 to 15 percent opacity throughout the 6 hours of readings. These relatively high visible emissions (for a baghouse) are attributed to numerous small leaks in the bags. The baghouse was inspected, and several minor bag leaks were found. Two compartments were quite dusty on the clean side, and a third was noticeably so.

Visible emissions from the roof monitor of the building reached a maximum of 15 percent opacity, but were greater than 0 percent opacity for less than 8 minutes during the 6-hour observation.

The furnace hood was observed for about 1½ hours, and furnace hood capture efficiency was consistently estimated as 100 percent.

Two tapping periods were observed, and visible emissions that escaped the tap hood were read. During the first tap period, the hood was moved away twice for unknown reasons; first, for about 45 seconds during the second minute of the tap, and, secondly, for about 45 seconds during the thirteenth minute of the tap. During the first tap, visible emissions escaping the tapping hood ranged from 25 to 60 percent opacity during the first 2 minutes while the tapping hood was in place. Thereafter, visible emissions did not exceed 20 percent opacity (one reading) and were 0 percent opacity most of the time. The tapping hood was in place throughout the second tap. During the second tap, maximum visible emissions escaping the tapping hood did not exceed 15 percent opacity, and were 0 percent opacity most of the time.

References 13 and 18.

[EPA-450/2-74-018b, continued]

FACITLITY W
SUMMARY OF RESULTS
(Visible emissions only)

Visible emissions were read at this facility on February 22, 1974.

Visible emissions from the baghouse monitor were observed for 6 hours, but during this time there were several periods when weather conditions or fume from uncontrolled furnaces made reading visible emissions impossible. During the time readings were possible, visible emissions from the baghouse monitor did not exceed 10 percent opacity and were 0 percent opacity most of the time. When visible emissions did occur, they were localized at one end of the baghouse monitor. On inspection of the baghouse, some leaking bags were observed. Eight bags in two compartments were replaced while the observations were being made.

An uncontrolled furnace existed in the same building as the controlled furnace. Visible emissions from the building roof monitor probably result from tapping the uncontrolled furnace or from pouring of the alloy. Visible emissions from the building monitor were observed at up to 20 percent opacity, but the building monitor was obscured most of the time by dust from uncontrolled furnaces.

The furnace hood was observed for 30 minutes, and the furnace hood capture efficiency was estimated to be 100 percent.

The tapping hood was observed for part of one tap, and it appeared to achieve complete collection of the tapping fume.

References 13 and 19.

[EPA-450/2-74-018b, continued]

REFERENCES

1. Kelly, Winton E., EPA, "Emissions from Electric-Arc Ferroalloy Furnaces at [Facilities A1, A2, and B]," June, 1973, EMB Project No. 72-PC-15.
2. Emission Test Report for Facilities C and P., prepared for EPA by Resources Research, Inc., Contract No. CPA 70-81. June, 1972. Test No. FA-7.
3. Durkee, Kenneth R., EPA, International Trip Report, "Survey of Japanese Ferroalloy Furnaces," August 9, 1973.
4. Dobryakov, G. G., Serebryakov, M. Z., and Rychkov, V. P., "Operation of a Gas Cleaning System on a Closed Top Electric Furnace," Steel in the U.S.S.R., page 2, May 1971.
5. "Air Pollution Emission Test, Part I," for Facility K, June 1974. EMB Report No. 73-FEA-07.
6. Emission Test Report for Facilities L1, L2, and L3, prepared for EPA by Resources Research, Inc., Contract No. CPA 70-81. Test No. FA-2.
7. Emission Test Report for Facility M, prepared for EPA by Resources Research, Inc., Contract No. CPA 70-81, Test No. FA-5.
8. Emission Test Report for Facility N, prepared for EPA by Resources Research, Inc., Contract No. 70-81, Test No. FA-6.
9. "Air Pollution Emission Test" for Facility O, June 1974, EMB Report No. 73-FEA-5.
10. Emission Test Report for Retest of Facility P, prepared for EPA by TRW Transportation and Environmental Operations, Contract No. 68-02-0235, EMB Test No. 72-PC-14.
11. Emission Test Report for Facility Q, prepared for EPA by Resources Research, Inc., Contract No. 70-81, Test No. FA-3.
12. Seiffert, Randy D., EPA, "Trip Report for Visit to [Facility Q]," March 13, 1974.
13. Letter and attachments from Lawrence Katzman, Walden Research Division of Abcor, Inc., to Randy D. Seiffert, EPA, March 12, 1974,
14. "Air Pollution Emission Test" for Facility R, June 1974, EMB Report No. 73-FEA-08.
15. "Air Pollution Emission Test" for Facility S, June 1974, EMB Report No. 73-FEA-09.
16. Emission Test Report for Facility T, prepared for EPA by Resources Research, Inc., Contract No. 70-81, Test No. FA-4.
17. "Air Pollution Emission Test" for Facility U, June 1974, EMB Report No. 73-FEA-10.

18. Seiffert, Randy D., EPA, "Trip Report for Contractor Visible Emission Readings at [Facility V]," March 13, 1974.

19. Seiffert, Randy, D., EPA, "Trip Report for Visit to [Facility W]," March 13, 1974.

CODE KEY

EPA-450/2-74-008	EPA-450/2-74-018b, Volume 2
A	
B	
C	L1, L2, L3
D	Q
E	T
F	M
G	N
H	P
J	C
K	A, (CSL-11), A_2 (CSL-13)
L	B
	K - Yokage Iron
	O - Kureba Sutetsu
	R - Neppon Koban K.K.
	S - Shawa Denko K.D.
	U - Awamura Metal Ind., Ltd
	V
	W Unknown

Efficiencies of control devices cannot be used very well to compare losses from furnace to furnace because of the differences in furnace sizes. The most equitable comparison is based on the amount of loss related to furnace energy input. Using pounds per megawatt-hour as an emission rate unit, the lowest emission rates for the gas cleaning system were those from the scrubbers serving the four covered furnaces. For covered furnaces, the rates ranged from 0.01 lb/Mw-hr for a venturi serving a SiMn furnace to 0.08 lb/Mw-hr for a venturi serving a 50 percent FeSi furnace. For open furnaces, the emissions rates from the gas cleaning system ranged from 0.33 lb/Mw-hr for a venturi serving a large SiMn furnace to 1.48 lb/Mw-hr for a venturi serving a small SiMn furnace. The emissions from the two baghouse systems tested on open furnaces were 0.42 lb/Mw-hr for FeCrSi and 0.94 lb/Mw-hr for silicon.

Fugitive fumes escaping from the mix seals on Furnaces H and J were measured. (These losses are not shown in Table VI-14.) The measured mix seal losses from Furnace H (50 percent FeSi) varied from 136 to 569 lb/hr (3 to 13.5 lb/Mw-hr). The measured loss from the mix seals on Furnace J (calcium carbide) varied from 44 to 50 lb/hr (1.8 to 2.2 lb/Mw-hr). These measured losses from the mix seals were somewhat higher than the ranges reported in questionnaire data, particularly for the 50 percent FeSi furnace (see Table VI-6). During the test, the furnace did not appear to operate smoothly at all times, and this may have resulted in heavier-than-normal emissions.

Uncontrolled tapping losses were measured from Furnaces C, H and J. Losses from Furnace J producing CaC_2 (continuous tapping) varied from 45 to 54 lb/hr. Losses from Furnace H producing 50 percent FeSi varied from 18 to 30 pounds per tapping period (12 to 17 minutes). Losses from Furnace C producing SiMn varied from 17 to 59 pounds per tapping period (28 to 32 minutes). On Furnaces D, E, and G, the tapping stations were served by the primary air pollution control systems.

Except for periods when there were visible emissions of approximately 10 percent opacity from the electrostatic precipitator serving Furnace E, no emissions were visible from any of the control systems tested under normal operating conditions. The uncontrolled fume emissions from the mix

seals of furnace H caused visible stack emissions in the range of 20 to 60 percent opacity, but during short periods of rough furnace operation the visible emissions were as high as 100 percent. These readings were taken on a random basis. Visible emissions from the electrode seals on the two furnaces in Norway were normally less than 10 percent opacity at the furnace area; at times there were no visible emissions. Visible emissions from all furnaces without tap fume control varied during the tapping cycle from 10 to 100 percent.

Temperatures of furnace gas entering the air pollution control devices varied depending on furnace hooding and the extent of precooling. The temperature of the gas stream entering a conditioning tower preceding an electrostatic precipitator (Furnace E) varied from 429 to 492°F during the EPA tests. Temperature of the gas stream entering a venturi scrubber on an open silicomanganese furnace (Furnace C) varied from 541 to 645°F.

Occasionally, the power may be turned off a semi-enclosed furnace for a short period and the cover doors opened to permit stoking. Totally enclosed furnaces in foreign installations have been found to be rarely if ever stoked. The frequency of stoking in a covered furnace is dependent upon the furnace operating conditions, the type of product, the quality of material, feed preparation, and furnace design.

Nine tests by EPA show that total particulate losses from two semi-enclosed furnaces equipped with scrubbers are higher than the losses from five well-controlled open furnaces and are considerably higher than those from two totally enclosed furnaces equipped with scrubbers. The particulates in the fugitive fumes from the mix seals of the two semi-enclosed furnaces tested averaged 342 lb/hr and 58 lb/hr respectively. The weight of particulates represented a computed loss of 8.7 percent and 6.7 percent of the total particulates generated in open furnaces of the same size and products based on the emission factors. A reduction in the fugitive fumes from the two semi-enclosed furnaces tested is required to meet the control equipment performance measured in the other seven EPA tests. Emission reduction may be accomplished by one or more of several methods; improved furnace operation, more advance design, or the use of secondary emission control.

In a covered furnace design using a shaft kiln, 80-90 percent of the dust containing 32.5 percent of MnO from a HC ferromanganese furnace is reported to be retained in the furnace feed mixture and returned to the furnace.[26]

Cleaned gas from covered ferroalloy or calcium carbide furnaces has significant value as fuel if the gas can be used within a reasonable distance of the furnace. Fuel value of the gas, based on the cost of an equivalent amount of coal, may exceed $100,000 per year for a moderate-sized ferroalloy furnace.

Retrofitting an open furnace to a covered furnace generally cannot be done without completely rebuilding it to include additional head room, which provides space for the cover itself. In addition, head room is required so that the electrode suspension mechanism may be raised to provide working space over the cover. The mixture supply system also requires increased head room since the mixture flows by gravity into the furnace, and the chutes need to be clear of the electrodes. Usually, self-baking electrodes are used for covered furnaces, and ample head room is needed to provide a working area for installing the metal electrode shells and an overhead crane for handling electrode materials.

Present knowledge indicates the various known control methods are not each broadly applicable to controlling emissions from the manufacture of all products. Existing controls result in the accumulation of substantial amounts of wastes in the form of either dusts or drained slurries. Without proper disposal, the dry dusts can be entrained by wind, and the drainage from slurries can become a water pollution problem. With the advent of new source performance standards and the increasingly stringent levels of control generally required under the Clean Air Act Amendments of 1970, the problem of handling and disposing of collected dusts can become more acute.

The technology of covered furnaces is applicable to the manufacture of almost all products except some high-silicon ferroalloys. However, the use of covered furnaces for different product lines has been noted to vary to some extent from country to country; in Japan, for example, covered furnaces have been used to produce silicon alloys containing up to 75 percent silicon.

A worldwide evaluation should be made of furnace designs, operating techniques, manufacturing limitations and capabilities, control technology, and economic factors. The goal of such an evaluation would be to determine the extent to which covered furnaces can be applied to the manufacture of high-silicon alloys.

[The following tables from EPA 450/2-74-008, VI-I through E-26, not all inclusive, are presented without the accompanying text since they are basically self-explanatory. These tables contain a wealth of information and deserve careful examination.]

Table VI-1. TYPICAL FURNACE FUME CHARACTERISTICS[17]

Fume characteristics	Furnace product: 50% FeSi	SMZ[a]	SiMn[b]	SiMn[b]	FeMn	HC FeCr	Chrome ore-lime melt	Mn ore-lime melt[b]
Furnace type	Open	Open	Covered	Covered	Open	Covered	Open	Open
Fume shape	Spherical, sometimes in chains	Spherical, sometimes in chains	Spherical	Spherical	Spherical	Spherical	Spherical and irregular	Spherical and irregular
Fume size, microns								
Maximum	0.75	0.8	0.75	0.75	0.75	1.0	0.50	2.0
Most particles	0.05 to 0.3	0.05 to 0.3	0.2 to 0.4	0.2 to 0.4	0.05 to 0.4	0.1 to 0.4	0.05 to 0.2	0.2 to 0.5
X-ray diffraction	← All fumes were primarily amorphous →							
Primary	FeSi	Fe_3O_4	Mn_3O_4	Quartz	Mn_3O_4	Spinel	Spinel	CaO
Trace constituents	$FeSi_2$	Fe_2O_3	MnO	SiMn	MnO	Quartz		
		Quartz	Quartz	Spinel	Quartz			
		SiC						
Chemical analysis, percent								
SiO_2	63 to 88	61.12	15.68	24.60	25.48	20.96	10.86	3.28
FeO		14.08	6.75	4.60	5.96	10.92	7.48	1.22
MgO		1.08	1.12	3.78	1.03	15.41	7.43	0.96
CaO		1.01	-	1.58	2.24	-	15.06	34.24
MnO		6.12	31.35	31.92	33.60	2.84	-	12.34
Al_2O_3		2.10	5.55	4.48	8.38	7.12	4.88	1.36
LOI[d]		-	23.25	12.04	-	-	13.86	11.92
Total Cr as Cr_2O_3		-	-	-	-	29.27[c]	14.69	-
SiC		1.82	-	-	-	-	-	-
ZrO_2		1.26	-	-	-	-	-	-
PbO		-	0.47	-	-	-	-	0.98
Na_2O		-	-	2.12	-	-	1.70	2.05
BaO		-	-	-	-	-	-	1.13
K_2O		-	-	-	-	-	-	13.08

[a] Si - 60 to 65%; Mn - 5 to 7%; Zr - 5 to 7%

[b] Manganese fume analyses in particular are subject to wide variations, depending on the ores used.

[c] Fumes from open furnace contain less chrome oxide.

[d] LOI is loss on ignition at 1000°C.

Table VI-3. PRODUCTION AND EMISSION FACTORS FOR UNCONTROLLED OPEN FURNACES[16]

Product	Production factors		Emission factors		
	Electrical Energy, mw-hr/ton product (average)	Ratio, tons charge/ ton product (average)	Particulates, lb/ton product	Particulates, lb/ton charge	Particulates, lb/mw-hr
Silicon alloys					
CaSi	11.8	3.9	1343	344	114
Si	14.0	4.9	1200[a]	245[a]	86[a]
SMZ	8.8	4.5	No data[b]	No data[b]	No data[b]
(65-75%)FeSi	8.8	4.5	915	203	104
50% FeSi	5.0	2.5	446	179	89
Silvery iron (15-22% FeSi)	2.6	1.8	116	64	45
Manganese alloys					
FeMnSi	5.4	4.3	315	73	58
SiMn	4.4	3.1	219	71	50
(HC) FeMn	2.4	3.0	335	84	62
Mn ore/lime melt	1.6	3.5	133	38	83
Chrome alloys					
FeCrSi	7.4	3.4	831	244	112
(HC) FeCr and charge chrome	4.2	4.0	335	84	62
Cr ore/lime melt	1.2	1.2	11	9	9
Other					
CaC_2	2.6	1.6	No data[b]	No data[b]	No data[b]

[a]Questionnaire data not conclusive. Numbers presented are estimates by the ferroalloy industry.

[b]No uncontrolled particulate emission reported in questionnaires.

Table VI-4. POTENTIAL PARTICULATE EMISSIONS (1971)

Product	Production, net tons[a]	Uncontrolled emission factors, lb/ton alloy	Potential emission, tons/yr
Silicon alloys			
CaSi	10,309	1,343[b]	6,900
Silicon metal	88,888	1,200[c]	53,300
65-90% FeSi	109,951	673[c]	37,000
50% FeSi	377,403	446[b]	84,200
Silvery iron (15-22% FeSi)	94,801	116[c]	4,700
			186,100
Chrome alloys			
FeCrSi	66,685	831[b]	27,700
HC FeCr	113,664	335[b]	19,000
LC FeCr	96,611	60[d]	2,900
			49,600
Manganese alloys			
HC FeMn	266,376	335[b]	44,600
LC FeMn	106,019	133[b]	7,000
FeMnSi	44,818	315[b]	7,000
SiMn	150,383	219[b]	16,500
			75,100
Other			
CaC_2	625,000[e]	100[c]	31,200
Totals	2,150,910		342,000

[a]Price-Waterhouse data.

[b]Emission factors determined from questionnaire data.

[c]Estimates.

[d]Emission occurring from ladle reactions.

[e]Department of Commerce, Census Bureau.

Table VI-5. RANGES OF UNCONTROLLED PARTICULATE EMISSIONS FROM OPEN FURNACES[16]

Product	No. of open furnaces reported[a]	Range of emissions	
		gr/scf	lb/mw-hr
Silicon alloys			
CaSi	3	0.33 to 0.91	111 to 115
Silicon	12	0.15 to 1.1	21 to 323
65-75% FeSi	6	0.16 to 0.25	40 to 191
50% FeSi	12	0.30 to 1.3	20 to 324
SMZ	1	0.36	25
Silvery iron (15-22% FeSi)	4	0.30 to 0.7	20 to 70
Manganese alloys			
FeMnSi	1	1.0	58
SiMn	12	0.17 to 4.0	43 to 147
HC FeMn	4	0.05 to 4.0	14 to 191
Mn ore/lime melt	4	NR[b]	NR
Chrome alloys			
FeCrSi	15	1.05 to 1.86	42 to 180
HC FeCr	3	1.07 to 1.60	62 to 117
Charge chrome	3	NR	NR
Cr ore/lime melt	6	0.1 to 0.5	5 to 15
Other			
CaC_2	None	--	--

[a]Includes emission data from open furnaces equipped with control devices. (Inlet data only to control devices)

[b]NR - none reported.

Table VI-7. RANGES OF PARTICULATE EMISSIONS REPORTED FOR SEMI-COVERED FURNACES WITH MIX SEALS[16]

No. of furnaces reported	Product	Mix seal losses		Scrubber inlet			Total scrubber inlet and mix seal losses		Scrubber outlet		
		gr/scf	lb/hr	gr/scf	lb/hr	lb/mw-hr	lb/hr[a]	lb/mw-hr	gr/scf	lb/hr	lb/mw-hr
7	50% FeSi	0.04 to 0.27	14 to 115	5 to 22	160 to 680	8 to 44	421 to 795	11 to 51	0.08	5	0.13[b]
3	65-75% FeSi	0.1 to 0.25	44 to 110	20 to 22	343 to 750	36 to 50	389 to 860	41 to 58	0.3 to 0.4	5.2 to 13.7	0.5 to 0.9[c]
4	SiMn	0.4 to 0.6	222 to 462	6 to 20	87 to 320	9 to 36	309 to 588	52 to 65	NR	NR[d]	NR
6	FeMn	0.05 to 0.4	16 to 278	4 to 30	58 to 515	10 to 74	208 to 592	36 to 81	NR	NR	NR
3	HC FeCr	0.12 to 0.15	41 to 50	20	353	29 to 35	394 to 403	34 to 39	NR	NR	NR
6	CaC_2	0.05 to 0.1	34 to 55	15 to 25	210 to 450	22 to 30	399 to 505	23 to 33	0.13	21	0.21[c]

[a]Low and high figures are not necessarily a total of previous columns.

[b]High-energy venturi scrubber.

[c]Centrifugal scrubbers.

[d]NR - not reported.

Table VI-8. AVERAGE EXHAUST-SYSTEM GAS VOLUMES FROM SEMI-ENCLOSED FURNACES[16]

Product	Number of furnaces reported	Range of furnace sizes, mw	Type of control system	No. of control systems.	Gases from fugitive exhaust system,[a] scfm/mw	Gases from air pollution control system, scfm/mw
HC FeMn	7	5.9 to 13	Scrubber	7	8,600	220
65-75% FeSi	3	9.5 to 15	Scrubber	3	4,000	210
SiMn	4	6 to 9.5	Scrubber	4	10,000	200
HC FeCr	4	10 to 25	Scrubber	3	3,750	190
50% FeSi	7	11.3 to 38.5	Scrubber	7	2,650	180
CaC_2	6	8.5 to 20.8	Scrubber	6	3,360	140

[a]Fugitive fumes are considered to be those fumes which are not collected by the primary air pollution control system and excludes tapping fumes.

Table VI-9. AVERAGE EXHAUST-SYSTEM GAS VOLUMES FROM OPEN FURNACES[16]

Product	Number of furnaces reported, controlled & uncontrolled	Range of furnace sizes, mw	Type of control system	No. of control systems	Gases from uncontrolled exhaust system, scfm/mw	Gases from air pollution control system, scfm/mw
Silicon alloys						
Silicon	12	7 to 16	Baghouse	3	31,600	16,800
CaSi	3	8.7 to 12.5	NR[a]	-	29,200	-
75% FeSi	6	9 to 30	Baghouse	1	11,500	18,600
50% FeSi	12	7 to 35	Baghouse	1	10,700	9,200
SMZ	1	10	NR	-	5,700	-
Silvery iron (15-22% FeSi)	4	7.5 to 20	NR	-	9,700	-
Manganese alloys						
FeMnSi	1	18	Baghouse	1	NR	6,700
SiMn	12	5 to 25	Baghouse	2	28,000	12,200
			Scrubber	3	-	4,800
HC FeMn	4	6.3 to 9.3	Baghouse	1	86,400	13,200
			Scrubber	1	-	5,500
Mn ore/lime melt	4	7 to 18.5	Baghouse	1	NR	8,100
Chrome alloys						
FeCrSi	15	10 to 22	Scrubber	1	11,500	3,400
HC FeCr and Charge chrome	6	7 to 25	Scrubber	1	10,000	4,800
Cr ore/lime melt	6	7.3 to 16	NR	+	4,100	-

[a] NR-none reported.

Table VI-13. SUMMARY OF PRODUCTION DATA DURING EPA TESTS

Furnace designation	Type of furnace: Open	Type of furnace: Covered	Product	Average operating load during test, mw	Average Production factors: Charge ratio, tons/ton alloy (average)	Average Production factors: Electrical energy, mw-hr per ton alloy (average)	Product, ton/hr[a]	Charge, ton/hr[a]
A	X		FeCrSi	10	3.4	7.4	1.35	4.6
B	X		Cr ore/ lime melt	9	1.2	1.2	7.5	9.0
C	X		SiMn	27	3.1	4.4	6.15	19.0
D	X		FeCrSi	21	3.4	7.4	2.85	9.7
E	X		FeCr (HC)	33	4.0	4.2	7.85	31.5
F	X		Si	17	4.9	14.0	1.21	5.9
G	X		SiMn	7.2	3.1	4.4	1.63	5.1
H		X[b]	50% FeSi	44	2.5	5.0	8.80	22.0
J		X[b]	CaC_2	23	1.6	2.6	8.85	14.2
K		X[c]	FeMn	27	3.0	2.4	11.25	33.8
L		X[c]	SiMn	23	3.1	4.4	5.23	16.2

[a]Tons product and tons charge per hour based on average production factors.

[b]Covered furnace with mix seals.

[c]Totally enclosed furnace.

Table VI-14. SUMMARY OF EPA FERROALLOY FURNACE EMISSION TESTS

Furnace designation	Type of furnace: Open	Type of furnace: Covered	Type of control	Product	Volume of gas to control system, scfm(dry)	Inlet particulate loading[a]: gr/scf	Inlet particulate loading[a]: lb/Mw-hr	Outlet particulate emissions[a]: lb/Mw-hr	Outlet particulate emissions[a]: gr/scf	Outlet particulate emissions[a]: lb/hr	Outlet particulate emissions[a]: lb/ton product	Outlet particulate emissions[a]: lb/ton charge	Controlled-stack visible emissions, % opacity during test	Efficiencies: Control equipment efficiency only, %	Efficiencies: Estimated overall collecting efficiency, %
A	X		None	FeCrSi	159,150	0.21	29	--	--	--	--	--	80-100[b]	0	0
B	X		None	Cr ore/ lime melt	41,200	0.16	6	--	--	--	--	--	80-100[b]	0	0
C	X		Venturi	SiMn	115,000	1.2	40	0.33	0.01	8.9	1.45	0.47	0	99.2	99.1[c]
D	X		Baghouse	FeCrSi	178,000[d]	0.35	25	0.42	0.003	8.8	3.01	0.91	0	98.3	98.1
E	X		Precipi-tator	HC, FeCr	156,000	0.93	39	0.64	0.016	21.0	2.70	0.67	0-10	98.4	98.0
F	X		Baghouse	Si	391,000[d]	0.70	144	0.94	0.003[e]	16.3	13.50	2.76	0	99.1	96.0[c]
G	X		Venturi	SiMg	15,500	1.7	28	1.48	0.08[f]	10.6	6.50	2.08	0[g]	94.5	94.0
H		X	Venturi	50% FeSi	7,613[h]	60[i]	89[i]	0.08	0.06[j]	3.7	0.42	0.17	0[j]	99.9[i]	91.0[c]
J		X	Scrubber[k]	CaC_2	1,585[h]	50	29	0.02	0.03	3.4	0.04	0.03	0	99.9[i]	94.0[c]
K		X	Venturi	HC, FeMn	5,322[h]	37[i]	62[i]	0.024	0.013	0.6	0.06	0.02	0	99.9[i]	> 99.1[c]
L		X	Venturi	SiMn	2,417[h]	56[i]	50[i]	0.01	0.01	0.2	0.10	0.03	0	99.9[i]	> 99.1[c]

[a] Based on front half of EPA sampling train; collected at control equipment inlet and outlet.

[b] Uncontrolled exhaust system.

[c] Does not include tapping losses.

[d] Does not include dilution air into baghouse.

[e] Includes dilution air into baghouse.

[f] Tight open hood (Aeronetics scrubber system).

[g] Long prevailing water vapor plume from scrubber; by time plume disappeared, plume had been diluted and no visible emission was noted.

[h] Collected gases from under the furnace cover.

[i] No inlet tests were made. Figures are based on production and emission factors.

[j] This concentration is before flare. Without flaring, visible emissions are 20-30%; no emissions are visible when gas is flared.

[k] Buffalo Forge scrubber.

Table VI-15. COMPARISON OF EPA TEST RESULTS AND QUESTIONNAIRE DATA

(lb/ton product)

Furnace	Product	Control system	Type of furnace	EPA test results[a]		Questionnaire data	
				Inlet	Outlet	Inlet	Outlet
A	Ferrochrome-silicon	None	Open	231[b]	-	831[b]	14.1[c]
B	Cr ore/lime melt	None	Open	7.8[b]	-	11[b]	-
C	Silicomanganese	Scrubber	Open	178	1.63	219	3.3
D	Ferrochrome-silicon	Baghouse	Open	223	7.67	831	NR[d]
E	HC ferrochrome	ESP	Open	138	2.53	335	e
F	Silicon metal	Baghouse	Open	1945	14.7	1200[2]	NR
G	Silicomanganese	Scrubber	Open	140	7.05	219	3.3
H	50% Ferrosilicon	Venturi scrubber	Semi-enclosed	No Test	0.42	446	0.65
		Canopy hood for fugitive dust	Semi-enclosed	-	17.6[b]	-	23.7[b]
J	Calcium carbide	Centrifugal scrubber	Semi-enclosed	76.6[f]	0.06	-	0.55
		Canopy hood for fugitive dust	Semi-enclosed	-	7.02[b]	-	9.0[b]
K	C Ferromanganese	Venturi scrubbers	Totally enclosed	No test	0.07	-	NR
L	Silicomanganese	Venturi scrubbers	Totally enclosed	No test	0.10	-	NR

[a] Based on front half of EPA sampling train.

[b] Uncontrolled exhaust system.

[c] Only data were for a scrubber.

[d] None reported.

[e] No data - ESP installed after questionnaire survey.

[f] Test based on samples collected of suspended solids in scrubber water outlet.

[g] Questionnaire data not conclusive. Number presented is an estimate of the ferroalloy industry.

Table VI-17. PARTICLE-SIZE DATA FROM EPA TESTS[23]

Furnace designation	Furnace	Product	Collection device	Sampling point	No. of tests	Mass median diameter, microns	Standard geometric deviation, microns
A	Open	FeCrSi	None	Furnace outlet	3	0.66	1.90
C	Open	SiMn	High-energy scrubber	Scrubber outlet	8	0.43	2.74
C	Open	SiMn	High-energy scrubber	Inlet	6	1.16	2.16
C	Open	SiMn	None at taphole	Taphole fumes	4	1.49	3.91
D	Open	FeCrSi	Baghouse	Baghouse outlet	7	0.93	3.38
D	Open	FeCrSi	Baghouse	Inlet	9	0.98	5.00
E	Open	HC FeCr	ESP	ESP outlet	5	1.51	4.04
E	Open	HC FeCr	ESP	ESP inlet	6	1.72	4.72

Table VI-18. CHEMICAL ANALYSIS OF SAMPLES (percent)

Product	FeCrSi	FeCrSi			SiMn					SiMn	Cr ore/ lime melt	HC FeCr		FeMn	50% FeSi	Si
Furnace designation	A	D			C					L	B	E		K	H	F
Furnace type	Open	Open			Open					Semi-enclosed	Open	Open		Semi-enclosed	Semi-enclosed	Open
Sample/sample point	Furnace	Baghouse inlet	Baghouse outlet	Chrome ore	Scrubber stack outlet	Scrubber water outlet	Tapping	Mn pre charge[a]	FeMn slag charge[a]	Scrubber stack outlet	Furnace	ESP conditioning tower inlet	ESP collected dust	Scrubber stack outlet	Scrubber stack outlet	Baghouse outlet
Analytical method	b	b	b	c	b	c	b	c	c	c	b	B	c	c	c	c
Chemical constituent																
SiO_2	73.7	76.4	d	8.6	d	0.095	d	14.0	14.0	d	10.3	15.0	17.2	--	d	d
Mn	0.07	0.05	0.1	0.1	14.3	0.07	21.8	d	d	1.0	0.11	0.18	0.2	3.47	--	0.002
Cr	1.41	0.44	< 0.4	30.0	0.07	e	0.1	0.01	0.115	< 0.013	15.3	14.0	4.0	< 0.008	--	0.002
Fe	0.34	0.60	1.0	5.0	0.5	0.004	1.0	3.5	9.0	< 0.064	5.2	3.66	1.9	0.21	--	0.016
Al	0.10	0.37	8.0	7.0	0.7	0.01	0.7	3.5	4.0	--	0.55	6.33	5.0	--	--	0.10
Ca	--	0.43	4.0	0.35	0.6	0.016	0.4	0.3	0.2	< 0.33	10.7	0.27	0.3	5.08	--	0.06
Mg	7.70	5.40	0.6	10.0	1.6	0.02	0.6	0.25	0.25	< 0.33	7.5	8.9	15.0	2.08	4.0	0.03
Na	--	0.23	12.7	0.01	34.5	0.055	0.05	0.35	0.3	1.64	--	4.22	15.0	1.04	40.0	0.03
Zn	0.69	0.35	0.6	< 0.02	0.7	e	0.3	< 0.02	< 0.01	< 0.044	2.8	0.93	0.5	1.39	0.4	0.003
K	--	0.25	0.9	< 0.05	23.4	0.1	6.0	2.0	1.5	2.30	--	5.95	10.0	1.46	74.0	0.17
Pb	< 0.001	--	--	< 0.01	--	f	--	< 0.01	< 0.01	0.002	0.006	--	0.1	0.113	--	0.001
Ba	--	< 0.4	< 0.4	--	--	--	--	--	--	--	--	0.11	--	< 0.03	2.0	--
Tl	--	< 0.8	--	--	--	--	--	--	--	--	--	--	--	--	--	--
Hg	< 0.05	--	--	g	--	g	--	g	g	--	< 0.05	--	g	--	--	--
Cd	< 0.005	--	--	< 0.01	--	g	--	< 0.01	< 0.01	< 0.004	0.002	--	0.01	0.19	--	f
Be	< 0.001	--	--	e	--	g	--	f	< 0.001	f	< 0.001	--	e	g	--	g
V	< 0.03	--	--	0.05	--	g	--	0.03	0.06	< 0.013	< 0.03	--	0.006	< 0.011	--	f
As	--	--	--	< 0.02	e	--	--	< 0.02	--	< 0.044	--	--	0.02	< 0.027	--	< 0.002

[a]Average of two samples.
[b]Atomic absorption method.
[c]Optical emission spectrography method.
[d]Not determined. Major constituent over 25%.
[e]Less than 2 ppm.
[f]Less than 5 ppm.
[g]Less than 1 ppm.

Table VI-19. REPORTED EMISSION DATA AND RELATED INFORMATION FOR WELL-CONTROLLED JAPANESE SUBMERGED-ARC FURNACES

Furnace	Type furnace	Electrode seals	Product	Furnace size, mw	Feed pre-treatment	Air pollution control equipment	Volume of gas, scfmX1000	Reported Measured emissions	
								gr/scf	lb/mw/hr
1	Totally enclosed	Yes	75% FeSi	12	None	Venturi	1.3	0.035	0.03
2	Totally enclosed	Yes	HC Fe	32	a	Venturi-ESP	3.7	0.002	0.003
3	Totally enclosed	Yes	HC FeCr	17	b	Baghouse	2.5	--	--
4	Open	No	FeNi	15	c	Baghouse	--	--	--
5	Totally enclosed	Yes	FeCrSi	26	d	Venturi	3.1	0.010	0.01
6	Totally enclosed	Yes	SiMn	35	a	Venturi & Theisen	4.3	--	--
7	Totally enclosed	Yes	HC FeMn	25	a	Venturi & Theisen	4.3	--	--
8	Open	No	75% FeSi	28	None	Baghouse	180.0	<0.03	<1.5
9	Totally enclosed	Yes	50% FeSi	36	e	Venturi-ESP	--	0.001	0.002
10	Totally enclosed	Yes	50% FeSi	57	e	Venturi-ESP	7.4	0.001	0.002
11	Totally enclosed	Yes	HC FeMn	15	None	Rotoclone	--	--	--
12	Totally enclosed	Yes	SiMn	32	None	Venturi & Theisen	2.9	0.002	0.002
13	Totally enclosed	Yes	HC FeMn	29	None	Venturi & Theisen	3.7	0.001	0.004
14	Totally enclosed	Yes	SiMn	32	None	Venturi & Theisen	2.9	--	--
15	Open	Yes	HC FeCr	20	None	Baghouse	66.5	0.02	0.57

[a] Cokes and ores dried and screened.

[b] Ores and coke dried, crushed, and pelletized. Pellets are then dried, pre-reduced, and charged hot (900°C) into furnace.

[c] Ores pre-reduced.

[d] Cokes crushed and dried. Ores crushed and screened.

[e] Ores and cokes sized, sintered, and pelletized; units use iron ore as a feed material in place of scrap steel.

Table VIII-2. FACTORS FOR PROCESS WEIGHTS AND FERROALLOY PRODUCTION RELATED TO FURNACE KILOWATT CAPACITY

1	2	3	4	5	6	7
	Charge weight, lb/lb alloy		Furnace load, KW-hr/lb alloy			
Product	Range	Approximate average	Range	Approximate average	Product, lb/Mw-hr	Charge weight, lb/Mw-hr
Silvery iron	1.7-1.9	1.8	1.2-1.4	1.3	770	1380
50% FeSi	2.3-2.5	2.5	2.4-2.5	2.5	400	1000
65-75% FeSi	4.3-4.5	3.6	4.2-4.5	4.4	227	1020
Silicon metal	4.6-5.0	4.9	6.0-8.0	7.0	144	700
SMZ	4.3-4.5	4.5	4.2-4.5	4.4	227	1020
CaSi	3.8-4.0	3.9	5.7-6.1	5.9	170	660
HC FeMn	2.9-3.3	3.0	1.0-1.2	1.2	834	2500
SiMn	2.7-3.3	3.1	2.0-2.3	2.2	454	1410
FeMnSi	4.2-4.4	4.3	2.4-3.0	2.7	370	1590
Mn ore/lime melt	3.2-3.6	3.5	0.6-1.0	0.8	1350	4280
Chg Cr	3.7-4.1	4.0	2.0-2.2	2.1	476	1900
HC FeCr	3.7-4.1	4.0	2.0-2.2	2.1	476	1900
Cr ore/lime melt		1.2	0.5-0.7	0.6	1670	2000
FeCrSi	3.2-3.6	3.4	3.6-3.8	3.7	270	920
Ca carbide	1.5-1.7	1.6	1.3-1.4	1.3	770	1230

Table IX-11. MODEL FURNACE PARAMETERS

Parameter	Product				
	HC FeMn	SiMn	50% FeSi	HC FeCr	CaC_2
Power rating, mw	30	30	30	30	30
Product rate,[a] tons/yr.	99,000	44,000	47,500	51,000	91,000
Gas volume from totally enclosed furnace,[b] scfm	5,000	5,000	6,000	5,000	4,000
Gas volume from open furnace,[b] acfm @ 400°F	350,000	350,000[c]	450,000	250,000	200,000
Tapping fume gas volume from all furnace types, acfm @ 150°F[d]	60,000	60,000	60,000	60,000	60,000

[a]At 90 percent of full capacity.

[b]The gas volumes represent typical values obtained from the industry survey questionnaires.

[c]Assumed to be the same as for HC FeMn since the furnace may be designed to produce either product.

[d]The figures shown for the tap fume collection are additive to the open furnace volume, based on an open furnace configuration with the collection hood 5 to 7 feet above the furnace deck.

Table IX-16. COMPARISON OF CAPITAL AND ANNUAL COSTS FOR AN OPEN AND A TOTALLY ENCLOSED HC FeMn AND SiMn FURNACE PRODUCING HC FeMn OR SiMn (1971)

Cost item	Open furnace	Totally enclosed furnace
Comparison of total capital costs[a]		
Basic furnace and associated process equipment	$8,500,000	$ 8,500,000
Incremental furnace cost	--	1,400,000
Incremental feed pretreatment	--	3,000,000
Air pollution control systems	3,500,000	2,100,000
	$12,000,000	$15,000,000
Comparison of control equipment costs		
Capital costs[a]		
Primary system	$ 3,500,000	$ 1,700,000
Taphole system	(included in above)	400,000
Incremental furnace cost	--	1,400,000
	$ 3,500,000	$ 3,500,000
Annual costs		
Operating cost	$ 143,000	$ 135,000
Maintenance (6%)	210,000	210,000
Capital recovery (at 8% interest)	409,000[d]	390,000[c]
Administration (2%)	70,000	70,000
Taxes and insurance (2%)	70,000	70,000
	$ 902,000	$ 875,000
Annual cost per ton[b] **($/ton)**		
HC FeMn	9.11	8.84[e]
SiMn	20.50	19.89[e]

[a]Letter from Mr. D. J. MacIntyre, Manager, Environmental Affairs, Union Carbide Canada Limited. March 9, 1973.

[b]Based on 30 mw for HC FeMn and 34 mw for SiMn, both at 90% operating rate.

[c]Depreciation lives: 10 years - furnace cover, 15 years - pollution control system 20 years - incremental furnace costs.

[d]Depreciation life: 15 years.

[e]This does not include the annualized investment cost or operating cost of the incremental feed pretreatment equipment. The ferroalloy industry has indicated that the total manufacturing cost per ton of product is about equal for both the open furnace with control and the totally enclosed furnace with control and feed preparation.

Table A-4. PARTICULATE EMISSION CONCENTRATIONS AND RATES TO ATMOSPHERE FROM CONTROLLED TEST POINTS

Furnace	Sample number	Type of control	Probe and filter		Impinger		Total per sample point (includes water residue)		Total into atmosphere		Efficiency %
			gr/scf	lb/hr	gr/scf	lb/hr	gr/scf	lb/hr	gr/scf	lb/hr	
C	5	Scrubber 57" PD	0.010	10.0	0.007	6.1	0.017	16.1	0.02	16.1	
	6	Scrubber 57" PD	0.007	6.8	0.004	3.7	0.011	10.5	0.01	10.5	
	7	Scrubber 57" PD	0.011	11.2	0.001	1.6	0.012	12.8	0.01	12.8	
	8	Scrubber 57" PD	0.008	8.1	0.002	1.6	0.010	9.7	0.01	9.7	99.0
	10	Scrubber 57" PD	0.009	8.4	0.002	1.5	0.011	9.9	0.01	9.9	97.5
	12	Scrubber 47" PD	Sample	discarded			—	—			
	14	Scrubber 47" PD	0.015	15.2	0.002	2.0	0.017	17.2	0.02	17.2	99.0
	16	Scrubber 47" PD	0.018	17.7	0.002	1.7	0.020	19.4	0.02	19.4	99.0
	18	Scrubber 47" PD	0.011	11.8	0.002	1.8	0.013	13.6	0.01	13.6	99.4
	20	Scrubber 37" PD	0.0138	13.5	0.0006	0.6	0.0144	14.1	0.01	14.1	98.1
	22	Scrubber 37" PD	0.037	35.4	0.008	7.3	0.045	42.7	0.05	42.7	96.4
	24	Scrubber 37" PD	0.080	70.6	0.005	4.5	0.085	75.1	0.09	75.1	95.2
D	29N	Baghouse[a]	0.0035	11.5	0.008	28.3	0.012	39.8			
	29C	Baghouse[a]	0.0042	13.8	0.010	30.5	0.014	44.3	0.01	37.9	98.0
	29S	Baghouse[a]	0.0023	7.6	0.007	21.9	0.009	29.5			
	31N	Baghouse[a]	0.0038	12.5	0.008	27.2	0.012	39.7			
	31C	Baghouse[a]	0.0028	9.2	0.007	23.0	0.010	32.2	0.01	32.5	95.0
	31S	Baghouse[a]	0.0020	6.6	0.006	19.0	0.008	25.6			
	33N	Baghouse[a]	0.0023	7.6	0.004	12.8	0.006	20.4			
	33C	Baghouse[a]	0.0014	4.6	0.004	11.5	0.005	16.1	0.005	18.1	98.9
	33S	Baghouse[a]	0.0016	5.3	0.003	12.4	0.005	17.7			
E	35	Precipitator	0.029	36.3	0.002	3.1	0.031	39.4	0.03	39.4	97.2
	37	Precipitator	0.009	12.5	0.003	3.2	0.012	15.7	0.01	15.7	98.6
	39	Precipitator	0.010	14.2	0.003	3.0	0.013	17.2	0.01	17.2	98.8
F	42E	Baghouse[b]	0.007	4.2	0.007	2.4	0.014	6.6			
	42EC	Baghouse[b]	0.0032	1.9	0.002	0.6	0.005	2.5	0.01	11.2	99.1
	42WC	Baghouse[b]	0.0015	0.9	0.0005	0.2	0.002	1.1			
	42W	Baghouse[b]	0.0019	0.9	0.0001	0.1	0.002	1.0			
	44E	Baghouse[b]	0.0067	5.2	0.004	1.6	0.011	6.8			
	44EC	Baghouse[b]	0.0014	1.0	0.003	1.3	0.004	2.3	0.01	13.9	98.5
	44WC	Baghouse[b]	0.0023	1.4	0.002	1.1	0.004	2.5			
	44W	Baghouse[b]	0.0014	0.9	0.003	1..	0.004	2.3			
	47E	Baghouse[b]	0.0026	1.5	0.001	0.6	0.004	2.1			
	47EC	Baghouse[b]	0.0018	1.1	0.004	2.4	0.006	3.5	0.01	10.2	99.1
	47WC	Baghouse[b]	0.0017	1.0	0.002	1.3	0.004	2.3			
	47W	Baghouse[b]	0.0015	0.9	0.002	1.4	0.004	2.3			
G	49	Scrubber	0.040	5.8	0.009	1.3	0.049	7.1	0.05	7.1	97.6
	51	Scrubber	0.093	12.4	0.008	1.0	0.101	13.4	0.10	13.4	93.2
	53	Scrubber	0.102	13.6	0.005	0.6	0.107	14.2	0.11	14.2	92.6
H	54	Scrubber	0.668	67.0	0.188	19.0	0.856	86.1	0.86	86.1	
	55	Scrubber					0.115	11.2	0.12	11.2	
	56	Scrubber					0.085	8.3	0.09	8.3	
J	64	Scrubber					0.043	0.6	0.04	0.6	
	65	Scrubber					0.031	0.4	0.03	0.4	
	66	Scrubber					0.034	0.5	0.03	0.5	

[a] Three samplers used during each run designated N, C, and S. Total emissions are based on results of each sample. Total for each run is the average of N, C, and S.

[b] Four samplers used during each run designated E, EC, WC, and W. Each sampler covers emissions from two compartments. Total emissions for each test run are the summation of the results of E, EC, WC, and W.

Table A-5. PARTICULATE LOSSES FROM THE FUGITIVE FUME HOOD[a]

Furnace	Sample number	Probe and filter		Impinger		Total per sample point		Total into atmosphere	
		gr/scf	lb/hr	gr/scf	lb/hr	gr/scf	lb/hr	gr/scf	lb/hr
H	57N	0.095	40.6	0.008	3.6	0.103	44.2		
	57C	Sample rejected - glass probe broke						0.11	293.0[b]
	57S	0.110	45.5	0.015	6.0	0.125	51.5		
	58N	0.423	186.1	0.028	12.2	0.451	198.3		
	58C	0.337	157.7	0.016	7.2	0.353	164.9	0.47	602.5
	58S	0.565	225.4	0.035	13.9	0.600	239.3		
	59N	0.054	22.3	0.061	25.1	0.115	47.4		
	59C	0.358	159.9	0.064	28.6	0.422	188.5	0.43	516.5
	59S	0.740	275.5	0.014	5.1	0.754	280.6		
	60N	0.078	36.0	0.033	15.5	0.111	51.5		
	60C	0.077	36.8	0.031	14.4	0.108	51.2	0.13	169.1
	60S	0.163	63.3	0.008	3.1	0.171	66.4		
J	67NE	0.161	15.8	0.003	0.4	0.164	16.2		
	67NW	0.037	20.4	0.004	2.1	0.041	22.5	0.09	69.0[c]
	67SE	Sample rejected - glass probe broke							
	67SW	0.050	29.2	0.002	1.1	0.052	30.3		
	68NE	0.079	8.1	0.007	0.8	0.086	8.9		
	68NW	0.018	9.5	0.001	0.7	0.019	10.2	0.05	64.0
	68SE	0.046	13.2	0.005	1.4	0.051	14.6		
	68SW	0.029	15.7	0.015	8.5	0.044	24.2		
	69NE	0.079	9.1	0.007	0.7	0.086	9.8		
	69NW	0.021	10.8	0.003	1.7	0.024	12.5	0.05	68.5
	69SE	0.037	9.9	0.001	0.5	0.038	10.4		
	69SW	0.039	20.1	0.030	15.7	0.069	35.8		

[a]Fumes not captured by air pollution scrubber system.

[b]Fugitive fume hood discharges uncontrolled fumes to atmosphere through three stacks. Total into atmosphere is summation of samples N, C, and S. Total of 293 lb/hr would be higher if sample 57C were added.

[c]Fugitive fume hood discharges uncontrolled fumes to atmosphere through four stacks. Total into atmosphere is summation of samples NE, NW, SE, and SW. Total of 69 lb/hr would be higher if sample 67SE were added.

Table A-6. PARTICULATE EMISSION CONCENTRATIONS AND RATES TO ATMOSPHERE FROM TAPPING

Furnace	Sample number	Probe, cyclone, and filter		Impingers		Total per sample point		Total tapping loss from furnace	
		gr/scf	lb/tap	gr/scf	lb/tap	gr/scf	lb/tap	gr/scf	lb/tap
C	26E	0.036	11.5	0.001	0.20	0.037	11.7		
	26W	0.128	37.6	0.032	9.60	0.160	47.2	0.098	58.9[a]
	27E	0.025	7.5	0.003	0.80	0.028	8.3		
	27W	0.048	12.8	0.022	5.60	0.070	18.4	0.049	26.7[a]
	28E	0.028	7.9	0.003	0.80	0.031	8.7		
	28W	0.017	4.4	0.016	4.10	0.033	8.5	0.032	17.2[a]
H	61	0.372	28.5	0.016	0.50	0.387	29.0	0.387	29.0
	62	0.206	13.9	0.081	6.50	0.287	20.4	0.287	20.4
	63	0.347	17.9	0.004	0.20	0.351	18.1	0.351	18.1
J	70	0.207	52.4[b]	0.004	1.20[b]	0.211	53.6[b]	0.211	53.6[b]
	71	0.190	47.2[b]	0.012	3.00[b]	0.202	50.2[b]	0.202	50.2[b]
	72	0.188	44.4[b]	0.003	0.80[b]	0.191	45.2[b]	0.191	45.2[b]

[a]Sum of two tapping stacks serving one tapping station.

[b]Emissions on lb/hr basis (tapping continuous).

Table A-13. FURNACE GAS VOLUMES

Product	Average megawatts (test period)	Type of furnace, O-open C-closed	Temperature, °F	Gas volume, acfm
FeCrSi	9.8	O	280	196,000
FeCrSi	9.3	O	261	202,000
Cr ore lime melt	7.2	O	123	47,000
Cr ore lime melt	7.2	O	154	49,000
SiMn	23	O	599	224,000
SiMn	28	O	674	203,000
SiMn	27.5	O	607	215,000
SiMn	28	O	631	216,000
SiMn	27.5	O	633	230,000
SiMn	27.5	O	629	232,000
SiMn	28	O	655	205,000
SiMn	27	O	654	199,000
SiMn	27.5	O	541	192,000
FeCrSi	20	O	331	273,000
FeCrSi	22	O	323	271,000
FeCrSi	20	O	336	282,000
FeCr (HC)	33	O	460	295,000
FeCr (HC)	34	O	470	297,000
FeCr (HC)	34	O	445	310,000
Si	17	O	300	595,000
Si	17	O	300	630,000
Si	17	O	310	590,000
Si	17	O	307	590,000
SiMn	7.8	O	1133	51,300
SiMn	7.8	O	1100	51,400
SiMn	7.8	O	1106	51.700
FeSi (50%)	42	C	a	7,600[b]
FeSi (50%)	41	C	a	7,600[b]
FeSi (50%)	45	C	a	7,600[b]
CaC_2	24	C	a	1,443[b]
CaC_2	23.8	C	a	1,443[b]
CaC_2	23.5	C	a	1,443[b]

a No. test conducted at inlet.

b Volumes (scfm) based on outlet test.

Table C-1. OPACITY OF EMISSIONS REPORTED FROM EPA TESTS (%)

Furnace	Test run	Product	Type of furnace	Uncontrolled fumes: Outlet of furnace exhaust system point 2	Uncontrolled fumes: Outlet of tapping exhaust system points 3+8	Uncontrolled fumes: Outlet of fugitive fume exhaust system point 6	Controlled fumes: Type of control equipment	Controlled fumes: Degree fumes captured est. %	Controlled fumes: Percent opacity of uncaptured fumes at roof monitor-points 1+5	Controlled fumes: Percent opacity of control equipment outlet-points 4+7
A	1	FeCrSi	O	100	b		None			
	2			50 to 100	b					
B	1	Cr ore/ lime melt	O	50 to 100	b	100[c]	None			
	2			50 to 100	b	100[c]				
C	1	SiMn	O				Venturi(57"PD)	99	0	0
	2						Venturi(57"PD)		0	0
	3						Venturi(57"PD)		0	0
	4						Venturi(57"PD)		0	0
	5						Venturi(57"PD)		0	0
	7						Venturi(47"PD)	99	0	0
	8						Venturi(47"PD)		0	0
	9						Venturi(47"PD)		0	0
	10						Venturi(37"PD)	99	0	< 10
	11						Venturi(37"PD)		0	< 10
	12						Venturi(37"PD)		0	< 10
D	1	FeCrSi	O				Baghouse	99	0	0
	2						Baghouse		0	0
	3						Baghouse		0	0
E	1	HC FeCr	O				Precipitator	99		< 5
	2						Precipitator			5 to 20
	3						Precipitator			5 to 20
F	1	Silicon	O		100		Baghouse	95 to 99	10 to 20	0
	2				100		Baghouse		10 to 20	0
	3				100		Baghouse		10 to 20	0
G	1	SiMn	O		10 to 80		Venturi	99	0	0
	2				10 to 80			99	0	0
	3				10 to 80			99	0	0
H	1	50% FeSi	C			10 to 100	Venturi	85	See point 6	0
	2					10 to 100	Venturi		See point 6	0
	3					10 to 100	Venturi		See point 6	0
J	1	CaC_2	C			10 to 100	Scrubber			0
	2					10 to 100	Scrubber			0
	3					10 to 100	Scrubber			0
K	1	FeMn	C		100[d]		Venturi	100	0	0
	2				100[d]		Venturi		0	0
	3				100[d]		Venturi		0	0
	4				100[d]		Venturi		0	0
	5				100[d]		Venturi		0	0
L	1	SiMn	C		100[d]		Venturi	100	0	0
	2				100[d]		Venturi		0	0
	3				100[d]		Venturi		0	0

[a] O = open, C = closed.

[b] Tapping fumes vented to main uncontrolled exhaust system.

[c] Uncaptured fumes escaping through roof monitor.

[d] No exhaust system at tapping point.

Table C-1. OPACITY OF EMISSIONS REPORTED FROM QUESTIONNAIRE DATA

Questionnaire no.	Product	Uncontrolled fumes: Outlet of furnace exhaust system	Uncontrolled fumes: Outlet of tapping exhaust system	Uncontrolled fumes: Fugitive fumes exhaust system	Controlled fumes: Type of control	Controlled fumes: Control equipment outlet
82		80 to 100	No data reported.			
85		80 to 100				
46		20 to 80				
44		20 to 80				
45		20 to 80				
64	HC FeMn			0 to 20	BF[4] scrubber	
65				20 to 40	BF scrubber	
66				35	BF scrubber	
70				10 to 50	BF scrubber	
71				5 to 30	BF scrubber	
73				5 to 25	BF scrubber	
83				0 to 10	BF scrubber	
6		20 to 60				
15		20 to 60				
103	Gs-75% FeSi			40 to 60	BF scrubber	
79				20 to 40	BF scrubber	
84				20 to 40	BF scrubber	
68	50% FeSi			5 to 10	BF scrubber	
72				15 to 30	BF scrubber	
91				25	BF scrubber	
60				10 to 20	BF scrubber	
55				10 to 20	BF scrubber	
54				10 to 25	BF scrubber	
59				10 to 20	Venturi scrubber	
8		10				
91		80 to 100				
47		20 to 80				
52	SiMn			20 to 40	BF scrubber	
5		20 to 60				
7		20 to 60				
10		20 to 60				
11		20 to 60				
13		20 to 60				
14		20 to 60				
44				20 to 40	BF scrubber	
74				20 to 60	BF scrubber	
76					Venturi scrubber	0
80	FeCrSi	80 to 100				
90					Venturi	0 to 20
67	FeCr			20 to 30	BF scrubber	
69				20 to 40	BF scrubber	
75				20 to 30	BF scrubber	
77					Venturi scrubber	0
43	CaC_2			20 to 40	BF scrubber	
46				10 to 35	BF scrubber	
47				20 to 40	BF scrubber	
61				20 to 40	BF scrubber	
62				10 to 35	BF scrubber	
48				10	BF scrubber	
3	LC & MC FeMn	5 to 50				
104	CrOre/lime melt	60 to 80				
93	SiMn2	60 to 80				

[4]BF scrubber = Buffalo Forge scrubber.

Table E-3.
METALS ANALYSIS OF PARTICULATES
(FURNACES A & B)

Sample #	Ca	Cr	Mn	Cd	Pb	Hg[a]	Be	V	Mg	Fe	Zn	Al	SiO_2
25W-1[b]	--	2.11	0.059	0.002	0.0013	<0.05	<0.001	<0.03	4.7	0.45	1.68	<0.02	72.1
25W-2	--	0.74	0.065	<0.0003	<0.0008	"	"	"	7.8	0.18	0.43	0.18	81.4
25W-2	--	1.68	0.081	"	0.0012	"	"	"	7.2	0.37	1.56	0.079	74.4
25W-2	--	0.94	0.056	0.0007	<0.0008	"	"	"	6.5	0.30	0.44	0.050	76.3
25W-2	--	1.22	0.028	<0.0003	"	"	"	"	7.1	0.44	0.39	<0.02	72.9
25E-1	--	2.08	0.104	0.0005	0.0008	"	"	"	7.6	0.43	0.84	0.11	70.5
25E-1	--	1.66	0.079	"	<0.0008	"	"	"	11.3	0.40	0.50	0.11	67.5
25E-1	--	1.82	0.084	0.0004	"	"	"	"	11.9	0.39	0.52	0.16	66.6
25E-2	--	1.15	0.064	<0.0003	"	"	"	"	8.2	0.22	0.78	0.14	75.7
25E-2	--	1.86	0.087	"	"	"	"	"	6.7	0.42	0.53	0.21	77.1
25E-2	--	0.96	0.071	"	"	"	"	"	8.1	0.24	0.42	0.095	75.2
25E-2[c]	--	0.68	0.037	0.0005	"	"	"	"	5.1	0.27	0.30	0.024	SPILLED
6E-1[d]	10.6	12.4	0.107	0.003	0.0067	"	"	"	7.6	4.9	3.9	0.59	12.2
6E-2	10.7	18.1	0.102	0.0018	0.0043	"	"	"	7.3	5.4	1.6	0.50	8.3

[a] Only the acid leach sample was analyzed. Hg would be lost during fusion.
[b] Sample designations preceded by 25 are from Furnace A (FeCrSi furnace).
[c] Part of the sample was lost due to a spill. The results here, therefore, represent only what was present in the acid leach.
[d] Sample designations preceded by 6 are from Furnace B (chrome ore/lime melt furnace).

Table E-6. OPTICAL EMISSION ANALYSES (WT%)

Sample No.	Si	Mg	Al	Fe	Cr	Zn	Ca	Na	Ni	Mn	V	Cu	Co	Ti	B	Pb
25W-1[a]	40	4	2	1	1	1	0.2	0.8	0.005	0.05	<0.005	<0.001	0.001	0.001	0.005	0.03
25W-2	40	6	2	1	1	0.2	0.1	0.4	0.005	0.05	<0.005	<0.001	0.001	0.001	0.005	0.01
25W-2	40	6	2	1	1	0.4	0.2	0.6	0.005	0.05	<0.005	<0.001	0.001	0.002	0.005	0.01
25W-2	40	6	2	1	1	0.4	0.1	0.4	0.005	0.05	<0.005	<0.001	0.001	0.001	0.005	0.01
25W-2	40	6	2	1	1	0.4	0.2	0.6	0.005	0.05	<0.005	<0.001	0.001	0.001	0.01	0.01
25E-1	40	6	2	1	1	1	0.2	0.8	0.005	0.05	<0.005	<0.001	0.001	0.002	0.01	0.01
25E-1	40	10	2	1	1	0.4	0.2	0.8	0.005	0.05	<0.005	<0.001	0.001	0.002	0.02	0.01
25E-1	40	6	2	0.5	1	0.4	0.2	0.8	0.005	0.05	<0.005	<0.001	0.001	0.002	0.005	0.01
25E-1	40	8	3	0.5	1	0.4	0.2	0.4	0.005	0.05	<0.005	<0.001	0.001	0.002	0.005	0.01
25E-2	40	6	2	1	1	0.4	0.2	0.4	0.005	0.05	<0.005	<0.001	0.001	0.002	0.005	0.01
25E-2	40	6	2	1	1	0.4	0.1	0.6	0.005	0.05	<0.005	<0.001	0.001	0.001	0.005	0.01
25E-2	40	4	2	1	1	0.4	0.2	0.4	0.005	0.05	<0.005	<0.001	0.001	0.001	0.02	0.01
6E-1[b]	3	10	3	10	10	2	20	1.0	0.3	0.05	<0.03	<0.001	0.03	0.03	0.005	0.05
6E-2	3	10	2	10	10	3	20	1.0	0.3	0.05	<0.03	<0.001	0.03	0.03	0.005	0.05

Note: Values of Major Elements ± 30% of Reported Value.

Elements listed below not detected. The limits of detection are given.

Hg	200 PPM
As	200 PPM
Te	200 PPM
Sb	50 PPM
Be	2 PPM
Cd	100 PPM

[a]Sample designations preceded by 25 are from a ferrochromesilicon furnace (Furnace A).

[b]Sample designations preceded by 6 are from a chrome ore/lime melt furnace (Furnace B).

Table E-10. OPTICAL EMISSION SPECTROGRAPHY[a, b]

	Hg	Be	Cd	As	V	Mn	Ni	Sb	Cr	Zn	Cu	Pb	Se	B	Li	Ag	Sn	Fe	Sr	Na	K	Ca	Si	Mg	Al	P
-51 Scrubber Water Test A-2	<0.01	<0.02	< 0.8	< 2.	<0.6	830.	< 0.2	< 0.8	0.8	< 2.	0.3	3.	--	0.8	8.	<0.02	< 0.8	8.	0.8	830.	1660.	83.	415.	250.	83.	--
-52 Scrubber Water Test A-3	<0.01	<0.02	< 0.7	< 2.	<0.5	740.	0.3	< 0.7	0.7	2.	0.4	4.	--	1.	4.	<0.02	< 0.7	37.	0.7	370.	1110.	150.	370.	150.	75.	--
-53 Scrubber Water Test B-1	<0.01	<0.01	< 0.7	< 2.	<0.6	660.	< 0.1	< 0.7	0.7	< 1.	0.3	3.	--	0.4	3.	<0.01	< 0.7	20.	0.7	660.	1000.	120.	330.	200.	66.	--
-54 Scrubber Water Test B-2	<0.01	<0.02	< 0.7	< 2.	<0.5	740.	< 0.1	< 0.7	0.7	2.	0.7	5.	--	0.7	4.	<0.02	< 0.7	50.	0.7	740.	1110.	150.	370.	150.	75.	--
-55 Scrubber Water Test B-3	<0.01	<0.01	< 0.5	< 1.	0.3	500.	0.5	< 0.5	3.	1.	1.	4.	--	0.5	3.	<0.01	< 0.5	50.	1.	250.	750.	200.	250.	175.	175.	--
-56 Scrubber Water Test C-1	<0.01	<0.01	< 0.5	< 1.	<0.3	550.	0.2	< 0.5	1.	1.	0.5	3.	--	0.5	4.	<0.01	< 0.5	17.	0.5	550.	825.	175.	250.	175.	55.	--
-57 Scrubber Water Test C-2	<0.01	<0.02	< 0.9	< 2.	<0.6	930.	0.6	< 0.9	2.	2.	1.	5.	--	1.	7.	<0.02	< 0.9	65.	2.	470.	930.	370.	930.	280.	190.	--

[a]Results in ppm of as-received sample except where otherwise designated.

b. OPEN SILICON CARBIDE FURNACE

Table E-13. ELEMENTAL ANALYSIS OF PARTICULATE MATTER COLLECTED AT OUTLET AND INLET OF A BAGHOUSE SERVING A FERROCHROMESILICON FURNACE (atomic absorption)

Sample	Element wt%												
	Na	K	Mn	Fe	Zn	Cr	Ca	Mg	Al	Ba	Ti	SiO_2	Insoluble[b] Residue
ABE-M Stack Sample	12.7	0.9	0.1	1.0	0.6	<.4	4.0	0.6	8.0	<4.	<8.	a	
ABD-M Inlet Duct Sample	0.23	0.25	0.054	0.10	0.32	0.46	0.59	5.28	0.38	<.4	<.8	76.8	11,5
	0.22	0.25	0.050	0.08	0.37	0.42	0.27	5.59	0.35			76.0	13.2

[a] No SiO_2 quantitative results were determined for this sample which was a composite of three filters and their condensable particulate samples. The sample was known in advance to be predominantly SiO_2.

[b] The residue that seemed to defy attempts at dissolution was analyzed on the electron beam X-ray micro-analyzer and found to be primarily (~50%) platinum (from the platinum crucibles used) with lesser amounts of aluminum, sodium, and fluorine. The latter group of elements probably are evidence of incomplete digestion in the hot acid steps conducted early in the analysis-separation scheme.

Table E-14. OPTICAL EMISSION SPECTROGRAPHY[a, b]

	Hg	Be	Cd	As	V	Mn	Ni	Sb	Cr	Zn	Cu	Pb	Se	B	Li	Ag	Sn	Fe	Sr	Na	K	Ca	Si	Mg	Al	P
B-58 Chrome Ore Turk 2331	<1.	<2.	<100.	<200.	500.	1000.	1000.	<100.	30.%	<200.	<20.	<100.	--	<20.	<40.	<2.	<100.	5.%	<100.	100.	<500.	3000.	4.%	10.%	7.%	--
B-59 Chrome Ore Turk 2238	<1.	<2.	<100.	<200.	500.	1000.	1000.	<100.	30.%	<200.	<20.	<100.	--	<20.	<40.	<2.	<100.	5.%	<100.	100.	<500.	4000.	4.%	10.%	7.%	-

[a]Results in ppm of as-received sample except where otherwise designated.

b. OPEN ELECTRIC CHROMIUM SILICON FURNACE

Table E-14 (continued). METAL AND OTHER ANALYSES OF COLLECTED PARTICULATES FROM FURNACE D

(μg/sample)

Determinations requested: anions, water insolubles, organic material, trace metals, pH

Type analyses: VAS, OES

	Sample designation							
	B272	B273	B274	B275	B276	B277	B278	B279
Mg	5000	15,000	10	12,000	5	4000	30	<1
Bi	5	2	<1	<1	<1	<1	<1	<1
Co	1	1	<1	3	<1	5	10	<1
Ge	<3	<3	<3	<3	<3	<3	<3	<3
Mo	3	<1	<1	<1	<1	<1	<1	<1
Ti	20	3	<1	1	3	5	5	1
Zr	3	<1	<1	<1	<1	<1	<1	<1
Ba	50	20	<1	10	2	50	2	<1
Al	2000	1000	10	1200	40	1200	60	<3
SO_4	< 500	24,000	< 500	22,000	6800	<500	10,000	<500
Cl	30	1000	<20	60	<20	<20	<20	20
NH_4	<30	120	70	700	1000	<30	750	<30
NO_3	< 100	200	100	100	<100	<100	100	<100
Water insoluble	223,000	191,700	3500	41,300	2200	121,500	None	None
Organic	16,500	2000	1400	2000	1000	4000	1000	400
pH	6.2	6.1	5.4	4.5	3.2	6.3	2.7	5.3

Table E-15. METAL AND OTHER ANALYSES OF COLLECTED PARTICULATES FROM FURNACE D

(μg/sample)

Determinations requested: anions, water insolubles, organic material, trace metals, pH

Type analysis: VAS, OES

	Sample designation							
	B272	B273	B274	B275	B276	B277	B278	B279
Be	<0.1	<0.1	<0.1	<0.1	<0.1	<0.1	<0.1	<0.1
Cd	<5	<5	<5	<5	<5	<5	<5	<5
As	10	<10	<10	<10	<10	<10	<10	<10
V	3	<1	<1	<1	<1	<1	<1	<1
Mn	100	200	<1	200	10	80	10	<1
Ni	30	30	<1	30	2	5	2	<1
Sb	<5	<5	<5	<5	<5	<5	<5	<5
Cr	1000	1000	<1	600	3	600	10	<1
Zn	150	300	<10	50	10	30	20	<10
Cu	10	10	<1	7	5	5	7	<1
Pb	200	300	<5	300	5	30	5	<5
B	3	3	1	3	1	5	1	<1
Li	<5	<5	<5	5	<5	<5	<5	<5
Ag	3	1	<0.1	0.1	<0.1	1	0.1	<0.1
Sn	30	10	<5	10	5	20	5	<5
Fe	700	300	5	300	20	300	50	1
Sr	<5	<5	<5	<5	<5	<5	<5	<5
Na	1000	2000	<10	800	100	300	100	<10
K	2000	2000	<10	1000	30	800	30	<10
Ca	150	700	20	400	100	200	200	<1
Si	100,000	50,000	200	40,000	200	120,000	200	5

Table E-16. QUALITATIVE ELECTRON BEAM X-RAY MICROANALYSIS AND ATOMIC ABSORPTION RESULTS FROM SAMPLE COLLECTED AT PRECIPITATOR INLET DUCT (FURNACE E)[b].

Sample CD-M	Cr	Mn	Mg	Fe	Al	Ca	Ba	Na	K	Zn	Cl	S	SiO_2	O	C	Ti
Electron Beam	H	L	H	M	M	L	-	M	M	L	H	L	H	H	L	T
Atomic Absorption	14.0	0.18	8.90	3.66	6.33	0.27	0.11	4.22	5.95	0.93	a	a	15.0	a	a	a

H = high >10%

M = medium 1-10%

L = low 0.1-1%

T = trace ~<0.1%

[a] Quantitative atomic absorption analyses were not performed.

b. OPEN AC FERROCHROME FURNACE

TABLE E-18. OPEN SILICON METAL FURNACE

Element	Identification No.[a] -165	-166,-167,-168,-169	-170	-171	-172	-188	-189	-190	-191	-192
Be	<1.	<5.	<0.1	<0.1	<0.1	<0.1	<0.1	<0.1	<0.1	<0.1
Cd	<50.	<200.	<5.	<5.	<5.	<5.	<2.	<5.	<5.	<5.
As	<90.	<500.	<10.	<10.	<10.	<10.	<20.	<10.	<10.	<10.
V	<30.	<50.	<1.	<1.	<1.	<1.	<5.	<1.	<1.	<1.
Mn	600.	500.	5.	30.	6.	15.	30.	4.	10.	<1.
Ni	600.	<25.	2.	20.	5.	15.	<5.	<1.	<1.	<1.
Sb	<50.	<250.	<5.	<5.	<5.	<5.	<20.	<5.	<5.	<5.
Cr	250.	<50.	1.	4.	5.	15.	6.	4.	<1.	<1.
Zn	300.	<500.	30.	20.	<10.	60.	20.	100.	30.	<10.
Cu	170.	50.	1.	1.	2.	5.	T<2.	2.	1.	0.5
Pb	90.	150.	<5.	12.	12.	10.	<10.	25.	5.	<5.
Se	-	-	-	-	-	-	-	-	-	-
B	30.	90.	1.	<1.	3.	1.	500.	20.	<1.	1.
F	-	-	-	-	-	-	-	-	-	-
Li	<300.	<1,300.	<30.	<30.	<30.	<30.	-	<30.	<30.	<30.
Ag	1.	<5.	1.	0.1	<0.1	0.3	-	<0.1	0.3	<0.1
Sn	150.	250.	15.	15.	15.	<5.	<6.	<5.	<5.	<5.
Fe	1,400.	500.	8.	40.	20.	70.	100.	30.	40.	10.
Sr	<30.	<150.	<5.	<5.	<5.	<5.	30.	<5.	<5.	<5.
Na	100.	<500.	10.	20.	<10.	30.	300.	40.	50.	<10.
K	700.	5,000.	10.	40.	60.	<10.	1,700.	<1.	20.	<10.
Ca	900.	100.	20.	1,200.	100.	15.	600.	15.	200.	10.
Si	140,000.	700,000.	3,000.	1,200.	14,000.	700.	-	1,200.	150.	150.
Mg	300.	1,000.	10.	40.	40.	25.	300.	15.	20.	2.
Bi	<10.	<50.	<1.	<1.	<1.	<1.	<6.	<1.	<1.	<1.
Co	<10.	<50.	1.	20.	<1.	<1.	<6.	<1.	<1.	<1.
Ge	<30.	<150.	<5.	<5.	<5.	<5.	-	<5.	<5.	<5.
Mo	50.	<50.	<1.	<1.	<1.	<1.	<2.	<1.	<1.	<1.
Ti	90.	<50.	1.	<1.	3.	1.	<2.	1.	<1.	<1.
Sm	-	-	-	-	-	-	-	-	-	-
Te	<90.	<500.	<10.	<10.	<10.	<10.	-	<10.	<10.	<10.
Th	<90.	<500.	<10.	<10.	<10.	<10.	-	<10.	<10.	<10.
Zr	<10.	<50.	<1.	<1.	<1.	<1.	-	<1.	<1.	<1.
Ba	25.	70.	<1.	3.	1.	10.	-	10.	1.	5.
Al	900.	5,000.	20.	40.	50.	40.	1,000.	25.	50.	3.
$SO_4^=$	<500.	<500.	<500.	36,000.	<500.	<500.	<500.	<500.	17,900.	<500.
Cl^-	1,500.	<1,000.	110.	<40.	40.	<50.	800.	140.	<40.	40.
NO_3^-	400.	400.	<100.	800.	<100.	500.	500.	300.	1,100.	<100.
NH_4^+	200.	100.	130.	490.	<30.	<30.	<30.	90.	550.	<30.
Organic[b]	22,000.	17,000.	5,200.	-	-	3,800.	2,400.	13,800.	-	-
H_2O Insol.	480,000.	2,210,000.	19,200	-	--	<1,000.	197,200.	10,100.	-	-
pH	-	-	-	2.2	4.1	-	-	-	2.4	3.8

[a] Identification Number is 72-001-XXX.
[b] Acetone soluble organic material.
- = Not sought.

Table E-22. CHEMICAL ANALYSIS OF PARTICULATES FROM FURNACE H - COVERED 50% FeSi FURNACE

REPORT OF ANALYSIS
TRACE ELEMENTS
ppm - for solid samples
ug/ml - for liquid samples

Ident No.	Hg	Be	Cd	As	V	Mn	Ni	Sb	Cr	Zn	Cu	Pb	Se	B	F	Li	Ag	Sn	Fe	Sr	Na	K	Ca	Si	Mg	Ba
133		<0.4	53	53	<9	445	90	53	178	3560	178	445		178		<250	445	2[illegible]	1425	9	1780	2225	625	8900	890	35
134		<4	<40	<400	<120	200	<40	<400	<120	6000	<40	200		36000			<40	<120	2000	2000	600000	180000	450000	MAJOR	120000	12000
135		<2	<94	235	<25	472	142	<94	49	235	142	1180		235		<700	9	172	2360	9	700	142	1180	11800	235	24
136																										
137		<26	<1000	<1580	<460	158	263	<1000	526	1000	1000	263		263		<300	52	526	2630	<100	2630	1000	1580	52600	1000	<26[illegible]
POSSIBLE FILTER BLANK a		<4	<40	<400	<120	200	<40	<400	<120	2000	<40	<200		4000			<40	<120	2000	2000	200000	40000	200000	MAJOR	2000	4000

Analysis Method: 1-NAA, 2-SSMS, 3-OES, 4-AA, 5-ASV, 6-XRF, and 7-other

Comments: a BLANK VALUES SELECTED FROM PREVIOUS OTHER DATA AND GIVEN TO INDICATE POSSIBLE BLANK LEVELS (FILTER SAMPLE ONLY NUMBER 134). BLANK NOT SUBTRACTED

Other Analysis - Use Table B to fill analysis requested (above each column)

Mark (x) for specific analysis requested

Ident No.	$SO_4^=$	CL^-	NO_3^-	NH_4^+	pH	ORGANICS	WATER INSOLUBLES b
133	<0.5 mg	0.41 mg	0.30 mg	<0.02 mg	6.3	29.9 mg	47.7 mg
134	<0.5	0.25	<0.2	<0.08	8.6	58.8	94.1
135	<0.5	<0.05	<0.05	<0.02	5.7	12.1	15.0
136							
137	<0.5	<0.05	<0.05	<0.02	5.8	3.3	3.3
Analyst							
Method							

Comments: b WATER INSOLUBLES INCLUDE ORGANIC MATERIAL. No BLANKS HAVE BEEN SUBTRACTED FROM THESE RESULTS.

Table E-24. CHEMICAL ANALYSIS OF PARTICULATE EMISSIONS FROM FURNACE K - CLOSED FeMn FURNACE

REPORT OF ANALYSIS
TRACE ELEMENTS
ppm - for solid samples
ug/ml - for liquid samples

Ident No.	Hg	Be	Cd	As	V	Mn	Ni	Sb	Cr	Zn	Cu	Pb	Se	B	F	Li	Ag	Sn	Fe	Sr	Na	K	Ca	Si	Mg	Ba
3147		<0.3	153	153	19	3700	370	<77	933	7400	153	740		148		<533	110	74	5550	37	18500	740	7300	18500	5330	110
148		<19	<796	11130	<193	1930	193	<796	193	11130	1340	385		3850		<5330	19	193	11530	77	19233	15385	96153	96153	13346	385
149		<19	<796	<1130	<193	115	193	<796	193	11130	<193	385		193		<5330	<19	<193	796	<77	1930	796	796	96150	873	<193
150		<3	<135	<190	<30	630	30	<135	30	135	30	63		63		<943	30	30	630	<13	943	135	313	63900	350	<30
151 [a]		<3	1793	<177	<50	13300	<17	477	<50	3865	<17	533		<3600		—	<17	<50	1330	<50	6650	9300	73300	—	13300	<130

Analysis Method: 1-NAA, 2-SSMS, 3-OES, 4-AA, 5-ASV, 6-XRF, and 7-other

Comments: [a] FILTER 3151 CORRECTED FOR BLANK

Other Analysis - Use Table B to fill analysis requested (above each column)

Mark (x) for specific analysis requested

Ident No.	$SO_4^=$	Cl^-	NO_3^-	NH_4^+	pH	ORGANICS	WATER INSOLUBLES [b]			
3147	<0.5 mg	0.66 mg	0.2 mg	<0.03 mg	6.9	18.2 mg	20.6 mg			
148	<0.5	0.03	0.6	<0.03	6.4	<0.5	<0.5			
149	<0.5	0.03	<0.1	<0.03	5.8	1.4	1.8			
150	<0.5	0.03	<0.1	<0.03	6.5	7.0	9.4			
151	<0.5	0.64	<0.1	<0.1	7.0	40.8	316.4			
Analyst										
Method										

Comments: [b] INCLUDES ORGANICS

Table E-26. CHEMICAL ANALYSIS OF PARTICULATE EMISSIONS FROM FURNACE L - CLOSED SiMn FURNACE

REPORT OF ANALYSIS
TRACE ELEMENTS
ppm - for solid samples
ug/ml - for liquid samples

Ident No.	Hg	Be	Cd	As	V	Mn	Ni	Sb	Cr	Zn	Cu	Pb	Se	B	F	Li	Ag	Sn	Fe	Sr	Na	K	Ca	Si	Mg	Ba
3162		<2	90	135	<23	2250	135	<90	90	450	90	225		135		<675	23	45	1126	14	1126	225	1126	22500	450	45
163		<22	<900	2270	<227	2270	900	<900	455	900	900	455		6500		<6500	45	227	68150	90	22730	4545	11360	22730	2270	900
164		<35	<1540	<2300	<385	770	<385	<1540	<385	1540	<385	230		385		<11540	38	<385	19230	154	3850	3075	1540	38400	1540	<385
165		<4	<155	3875	<39	1940	78	<155	78	388	<39	155		233		<1162	39	39	1940	<15	1940	233	1940	19350	233	<37
166		<4	1886	<377	<113	56600	<37	<377	<113	18810	<37	1130		<5660		—	<37	<113	[illegible]	[illegible]	[illegible]	[illegible]	[illegible]		[illegible]	<383

Analysis Method: 1-NAA, 2-SSMS, 3-OES, 4-AA, 5-ASV, 6-XRF, and 7-other

Comments: FILTER (3166) CORRECTED FOR BLANK

Other Analysis - Use Table B to fill analysis requested (above each column)

Mark (x) for specific analysis requested

Ident No.	$SO_4^=$	Cl^-	NO_3^-	NH_4^+	pH	ORGANICS	WATER INSOLUBLES	*		
3162	<0.5 mg	<0.03 mg	<0.1 mg	<0.03 mg	6.8	14.3 mg	16.2 mg			
163	<0.5	0.14	<0.1	<0.03	7.3	2.4	2.5			
164	<0.5	<0.03	<0.1	<0.03	6.0	0.8	0.8			
165	<0.5	<0.03	<0.1	<0.03	6.8	5.6	6.1			
166	<0.5	0.64	0.4	<0.1	7.2	5.0	98.4			
Analyst										
Method										

Comments:

* INCLUDES ORGANICS

EPA 440/1-74-008a, WATER POLLUTION

PRODUCTION PROCESS

The ferroalloy manufacturing processes are listed below with the product groups manufactured by each process.

Submerged-arc furnace process -	Silvery iron
	50% Ferrosilicon
	65-75% Ferrosilicon
	Silicon metal
	Silicon-manganese-zirconium
	High-carbon (HC) ferromanganese
	Silicomanganese
	Ferromanganese silicon
	Charge chrome
	HC ferrochromium
	Ferrochrome silicon
	Calcium carbide
Exothermic process -	Low-carbon (LC) ferrochromium
	LC ferromanganese
	Medium-carbon (MC) ferromanganese
	Chromium metal
	Titanium, Vanadium and Columbium Alloys
Electrolytic process -	Chromium metal
	Manganese metal
Vacuum furnace process -	LC ferrochromium
Induction furnace process -	Magnesium ferrosilicon
	Ferrotitanium

Ferroalloy production in submerged-arc furnaces consists of raw materials preparation and handling, smelting, and product sizing and handling as shown in Figure 1.

RAW MATERIALS PREPARATION AND HANDLING

The mineralogy of individual ores used by the ferroalloys industry is highly technical and specialized. The ores must be analyzed and carefully evaluated to identify any undesirable elements. Careful evaluation of the ore is essential not only with regard to costs, including government tariffs,

since ores are commonly sold on the basis of contained metal or metallic oxide, but also with regard to freight charges to ferroalloy plants. Other considerations in the purchase of ores are their physical characteristics, ease of reduction, and analytical specifications necessary to meet customer requirements.

The molten alloy from the carbon reduction of the ore accumulates at the base of the electrodes in the furnace. The molten alloy is periodically removed through a tap-hole placed to drain the metal from the hearth of the furnace.

FERROSILICON PRODUCTION

Quartz and quartzite are the minerals mostly used for smelting ferrosilicon. The ores should contain not less than 98 percent SiO_2 and the lowest possible content of alumina, magnesium oxide, calcium oxide, and phosphorous. The reducing agent usually used is coke; other reducing agents are coal, petroleum coke, and charcoal. The reducing agent should have minimum ash and phosphorous content. The iron-containing substance should be clean, carbon steel scrap or pelletized iron ore; the chromium and phosphorous contents should be low. These requirements preclude the use of stainless scrap and cast iron scrap.

A material balance for the production of 50% ferrosilicon is typically as shown in Table 10.

TABLE 10. MATERIAL BALANCE FOR 50% FERROSILICON
(% of material charged)

Input		Output	
Quartzite	47.2	Alloy	41.8
Coke	27.4	Volatilized	58.2
Steel Shavings	24.5		
Electrode Mass	0.9		
	100.0		100.0

The charge materials for the production of silicon metal should contain no iron. Petroleum coke or charcoal is used as the reducing agent and pre-baked carbon electrodes are generally used. Power consumption increases

with increasing silicon content of the product from 50% FeSi to silicon metal.

Ferrosilicon is usually smelted in three-phase electric furnaces which may be rated at over 40 MW. Modern ferrosilicon furnaces are equipped with continuous self-baking electrodes and automated charging machinery. The electrodes are sheet steel cylinders that are filled with the electrode paste, made of a mixture of anthracite, coke, and other carbonaceous substances with a mixture of coal tar and pitch used as a binder. The electrode is consumed during the furnace reduction process and is periodically slipped into the furnace to compensate for its consumption.

The charge materials are prepared in charge yards, transported by conveyors to the proportioning floor, and distributed among the furnace hoppers. From the hoppers the charge is fed into the furnace charge holes. During the production of ferrosilicon, the furnace operates continuously and the metal is tapped as it accumulates. Six to eight tappings per shift are made. After tapping is finished as indicated by the appearance of flame at the tap hole, plugs consisting of electrode mass or a mixture of fire clay and coke dust are rammed in.

FERROMANGANESE PRODUCTION

Electric furnaces similar to those used for the production of ferrosilicon are used to produce ferromanganese. When ferromanganese is produced from its ores, iron, manganese, silicon, phosphorous, and sulfur are reduced and complex iron and manganese carbides are formed. Smelting is continuous with metal and/or slag being tapped every 2-4 hours.

Ferromanganese is produced in the electric furnace by either the flux process or the self-fluxing process. The self-fluxing process is commonly used in the United States. In the flux process, lime is introduced in the charge; MnO, which forms silicates with the silicon in the ore and coke dust ash, is displaced by calcium oxide, reducing losses of manganese to the slag. Phosphorous in the ore is mostly reduced and passes into the alloy. Up to 90% of the phosphorous in the ore can be reduced; the reduced phosphorous partially evaporates and escapes from the furnace while 60% of the total phosphorous in the charge passes into the alloy. Of the total sulfur

introduced in the charge, 1% passes into the alloy, 40-45% passes into the slag, and 55% escapes with the gases. The normal charge produces high-carbon ferromanganese by the flux method as in Table 11. The charge-to-alloy ratio is about 4.0.

TABLE 11. HC FERROMANGANESE CHARGE MATERIALS--FLUX METHOD
(% by weight)

Manganese ore	64.7
Coke	18.0
Limestone	16.8
Electrode mass	0.5
	100.0

In the self-fluxing method of producing ferromanganese, little or no lime is introduced in the charge; the slag is subsequently used to smelt silicomanganese. By this method, 60% of the manganese in the ore passes into the alloy, 8-10% escapes, and 30-32% passes into the slag; 70% of the manganese in the slag is extracted when silicomanganese is subsequently produced from the slag.

The normal charge to produce HC ferromanganese by the self-fluxing method is shown in Table 12. Of the charged materials, 30.9% pass into the alloy, 29.5% pass into the slag, and 39.6% escape as gas and dust. The gas contains 65-70% CO.

TABLE 12. HC FERROMANGANESE CHARGE MATERIALS - SELF-FLUXING METHOD
(% by weight)

Manganese ore (48% Mn)	74.8
Lime	4.6
Coke	20.0
Electrode mass	0.6
	100.0

Medium-carbon and low-carbon ferromanganese differ from high-carbon ferromanganese by their reduced carbon contents and are produced by a special process. Production in an electric furnace is usually by the silicothermic

reduction method. The charge for MC ferromanganese is composed of silicomanganese, manganese ore, and lime, as shown in Table 13. The charge-to-alloy ratio is about 3.5.

TABLE 13. MC FERROMANGANESE CHARGE
(% by weight)

Manganese ore	43.6
Lime	24.3
Silicomanganese (20% Si, 65% Mn)	31.2
Electrode mass	0.9
	100.0

A similar charge would be used to produce LC ferromanganese, but using silicomanganese with a higher silicon, lower carbon content (ferromanganese-silicon).

SILICOMANGANESE PRODUCTION

Silicomanganese is also produced in electric submerged-arc furnaces. The charge is continuously loaded and slag and metal are tapped 3 to 4 times during an 8-hour shift. Silicomanganese may be smelted from manganese ore, from self-fluxing slag from ferromanganese production, or from a combination of both.

A typical charge to produce silicomanganese is shown in Table 14.

TABLE 14. SILICOMANGANESE CHARGE MATERIALS
(% by weight)

Manganese slag	27.9
Manganese ore	27.9
Coal or coke	17.3
Lime	15.6
Recycle scrap	11.3
	100.0

Low-phosphorous silicomanganese is produced in a manner similar to that above except that no manganese ore is used in the charge, only manganese slag.

FERROCHROMIUM PRODUCTION

Ferrochromium is produced in several grades differing mainly in carbon content. Careful selection of chrome ores is important in producing each of the several grades of alloy.

HC Ferrochromium Smelting

In the production of HC ferrochromium, the chromium and iron oxides contained in the ore are reduced by a carbonaceous reducing agent. HC ferrochromium is smelted continuously; the charge materials are fed in small portions, keeping the furnace full while metal and slag are tapped about every 1½ to 2 hours. Smelting of HC FeCr requires higher voltages and higher power loadings than are used for most other ferroalloys.

A typical charge for the production of HC ferrochromium, normally 60-68% chromium, is shown in Table 15. The charge-to-alloy ratio is about 4.0.

TABLE 15. CHARGE MATERIALS FOR HC FERROCHROMIUM
(% by weight)

Chromium ore	72.4
Coke	14.7
Quartzite	6.6
Bauxite flux	5.5
Electrode mass	0.8
	100.0

The charge elements pass into the smelting products as shown in Table 16.

TABLE 16. RAW MATERIAL COMPONENTS TO SMELTING PRODUCTS FOR HC FeCr

Element	% in total charge		
	to alloy	to slag	loss
Chromium	90	6	4
Iron	98	2	-
Silicon	15	80	5
Phosphorous	60	20	20
Sulfur	10	30	60

Ferrochromesilicon Smelting

Ferrochromesilicon is generally produced by the direct method. In the direct method, chromium ore and quartzite are reduced by coke. The process is carried out in arc furnaces similar to those used in the production of ferrosilicon.

EXOTHERMIC PROCESSES

The exothermic process using silicon or aluminum, or a combination of the two, is used to a lesser extent than the submerged-arc process. In the exothermic process the silicon or aluminum combines with oxygen of the charge, generating considerable heat and creating temperatures of several thousand degrees in the reaction vessel. The exothermic process is generally used to produced higher grade alloys with low carbon content. Low-carbon and medium-carbon ferrochromium and low-carbon or medium-carbon ferromanganese are produced by silicon reduction. A flow diagram of a typical silicon reduction process for manufacturing LC ferrochromium is shown in Figure 4. First, chromium ore and lime are fused together in a furnace to form a chromium ore/lime melt. Second, a known amount of the melt is poured into the No. 1 reaction ladle followed by a known quantity of an intermediate molten ferrochromesilicon previously produced in a No. 2 ladle. The reaction in the No. 1 ladle is a rapid reduction of the chrome from its oxide and the formation of LC ferrochromium and a calcium silicate slag.

Since the slag from ladle No. 1 still contains recoverable chromium oxide, a second silicon reduction is made in the No. 2 ladle with molten ferrochromesilicon directly from the submerged-arc furnace. The reaction in the No. 2 ladle produces the intermediate ferrochromesilicon used in the No. 1 ladle reaction. LC and MC ferromanganese are produced by a similar practice using a silicon-bearing manganese alloy for reduction.

The reaction in these ladles from the silicon reduction results in a strong agitation of the molten bath and a rise in temperature. The elevated temperature and agitation produces emissions for about 5 minutes per heat that have similar characteristics to the emissions from submerged-arc furnaces.

ALUMINUM REDUCTION

Aluminum reduction is used to produce chromium metal, ferrotitanium, ferrovanadium and ferrocolumbium. Although aluminum is a more expensive reductant than carbon or silicon, the products are purer. Mixed aluminothermal-silicothermal processing is used for the production of ferromolybdenum and ferrotungsten. Usually such alloys are produced by exothermic reactions initiated by an external heat source and carried out in open vessels. The high-temperature reaction of aluminum reduction produces emissions for a limited time similar to those by silicon reduction.

SLAG PROCESSING

Some of the electric-arc smelting processes produce slag along with the ferroalloy product. These are:

Low-carbon ferrochromesilicon
High-carbon ferrochromium
High-carbon ferromanganese
Silicomanganese

These slags may contain metal entrapped in the slag which is recovered by crushing and separation of the slag and metal by a wet sink-float process, called slag concentration. The slag tines are also separated from the heavier particles so that a secondary product is slag of such size that it is usable for road building and similar purposes. This process is usually applied to ferrochromium slags for recovery of chromium which is re-charged to the furnace.

Another method of recovering metal values from manganese slag is to "shot" the slag, then use the slag as the raw material for electrolytic production of the metal. Rapid quenching of the molten slag in a large volume of flowing water produces a small-sized particle (shot) which can be readily leached with acid to produce the electrolyte solution for electrolytic manganese production.

EMISSIONS FROM SUBMERGED-ARC FURNACES

Since the quantity and composition of the emission from ferroalloy furnaces have a major impact upon the potential for water pollution in those plants using wet air pollution control devices, some discussion of such

emissions is appropriate. The conventional submerged-arc furnace utilizes carbon reduction of metallics in the oxide ores, and continuously produces large quantities of hot carbon monoxide which can be greater by weight than the metallic product. The CO gas venting from the top of the furnace carries fume from high-temperature regions of the furnace and entrains the finer sized constituents of the mix.

In an open furnace, all CO and other combustibles in the furnace gas burn with induced air at the top of the charge, resulting in a large volume of high-temperature gas. In a covered furnace, most or all of the CO and other gases are withdrawn from the furnace without combustion.

Properties and quantities of emitted particulates depend upon the alloy being produced. Except for ejected mix particles from the furnace, the fume size is generally below 2 microns (μ) and ranges from 0.1 to 1.0μ with a geometric mean of 0.3 to 0.6 depending upon the ferroalloy produced. In some cases, agglomeration does occur, and the effective particle size may be larger. Grain loadings and flowrates are dependent upon the type of furnace and hooding. Open submerged-arc furnaces have high flowrates and moderate grain loadings, while covered furnaces have moderate flowrates and generally high grain loadings. In the dry state, the collected emissions are very light and the bulk density varies from 64.1 to 480.6 kg/m^3 (4 to 30 lb/ft^3).

Silicon alloys produce a gray fume containing a high percentage of primarily amorphous silicon dioxide (SiO_2) (Ref. 5). Some tars and carbon are present arising from the coal, coke, or wood chips used in the charge. Ferrochrome-silicon furnaces produce an SiO_2 emission similar to a ferrosilicon operation with some additional chromium oxides. Manganese operations produce a brown emission, which analyses indicate to be largely a mixture of SiO_2 and manganese oxides. The emissions from chromium furnaces contain SiO_2, MgO and some iron and chromium oxides.

Chemical analysis of the fumes indicate their composition to be similar to oxides of the product being produced. Typical chemical analyses are given in Table 17.

TABLE 17. TYPICAL FURNACE FUME CHARACTERISTICS[5]

Furnace product	50% FeSi	SMZ[a]	SiMn[b]	SiMn[b]	FeMn	HC FeCr	Chrome ore-lime melt	Mn ore-lime melt
Furnace type	Open	Open	Covered	Covered	Open	Covered	Open	Open
Fume shape	Spherical, sometimes in chains	Spherical, sometimes in chains	Spherical	Spherical	Spherical	Spherical	Spherical and irregular	Spherical and irregular
Fume size characteristics, microns								
Maximum	0.75	0.8	0.75	0.75	0.75	1.0	0.50	2.0
Most particles	0.05 to 0.3	0.05 to 0.3	0.2 to 0.4	0.2 to 0.4	0.05 to 0.4	0.1 to 0.4	0.05 to 0.2	0.2 to 0.5
X-ray diffraction	All fumes were primarily amorphous							
Trace constituents	FeSi $FeSi_2$	Fe_3O_4 Fe_2O_3 Quartz SiC	Mn_3O_4 MnO Quartz	Quartz SiMn Spinel	Mn_3O_4 MnO Quartz	Spinel Quartz	Spinel	CaO
Chemical Analysis, %								
SiO_2	63 to 88[3]	61.12	15.68	24.60	25.48	20.96	10.86	3.28
FeO		14.08	6.75	4.60	5.96	10.92	7.48	1.22
MgO		1.08	1.12	3.78	1.03	15.41	7.43	0.96
CaO		1.01	--	1.58	2.24	--	15.06	34.24
MnO		6.12	31.35	31.92	33.60	2.84	--	12.34
Al_2O_3		2.10	5.55	4.48	8.38	7.12	4.88	1.36
LOI		--	23.25	12.04	--	--	13.86	11.92
TCr as Cr_2O_3		--	--	--	--	29.27	14.69	--
SiC		1.82	--	--	--	--	--	--
ZrO_2		1.26	--	--	--	--	--	--
PbO		--	0.47	--	--	--	--	0.98
Na_2O		--	--	2.12	--	--	1.70	2.05
BaO		--	--	--	--	--	--	1.13
K_2O		--	--	--	--	--	--	13.08

[a] Si - 60 to 65%; Mn - 5 to 7%; Zr - 5 to 7%

[b] Manganese fume analyses in particular are subject to wide variations, depending on the ores used.

EMISSIONS FROM EXOTHERMIC PROCESSES

Oxide fumes similar in physical characteristics to those from the submerged-arc furnace are emitted from the reaction ladle or furnace while the reducing agent is being charged during alumino- or silicothermic reduction. This emission is due to strong agitation of the molten bath and the rapid temperature rise. The reaction may take from 5-15 minutes per heat, and the heat cycle is about 1½ to 2 hours. Therefore, atmospheric emissions from the exothermic reactions take place during about 10 percent of the cycle.

The quantity of emissions from the exothermic reactions ranges from 9.08 to 18.6 kg (20-40 lb) of particulates per ton of ferroalloys produced. The total tonnage of ferroalloys made by the exothermic process amounts to 10 to 15 percent of the total ferroalloys production in the United States.

OPERATING VARIABLES AFFECTING EMISSIONS

Because of the complexity of the heavy mechanical and electrical equipment associated with a modern submerged-arc furnace, close supervision and maintenance are required to prevent frequent furnace shutdowns. The furnaces are designed to operate continuously to maintain satisfactory metallurgical and thermal equilibria.

Normal furnace shutdowns on an annual basis may average three to ten percent of the operating time and are caused by a wide variety of situations. There can be electrode installations, maintenance, repair of water leaks at electrode contact plates, mix chute failures, furnace hood or cover failures, taphole problems, electrical or other utility failures, crane failures, ladle or chill problems or curtailments of service by the power companies. In general, furnace interruptions are relatively short in duration and usually are not more than several hours. Following such interruptions, the furnace usually returns to normal operation with normal emissions in a period of time approximately equal to the length of the interruption.

Greater-than-normal emissions occur after returning power to the furnace following a lengthy interruption caused by a major furnace operational problem. These problems may include electrode failure that makes it necessary to dig out an electrode stub or to bake at a reduced load for self-baking

electrodes, serious mixture blows of the furnace, metallurgical problems that require a furnace burndown to return it to normal operations, serious water leaks that flood the furnace with water, furnace hearth failure, major taphole problems, transformer or major electrical system failures, etc. When starting up a new furnace or one with a cleaned out hearth, as well as a furnace with a cold hearth after a long shutdown, heavier-than-normal emissions may last up to a week before the furnace operates in an optimum manner.

* * * * * * * * * * * * * * *

Air pollution is the major pollution problem in this industry. Much of the water pollution problem is created by solving air pollution problems with wet air pollution control devices such as scrubbers. Since the only water pollution potential from an electric furnace, which is either uncontrolled or controlled with a dry air pollution control system (such as a baghouse), is that from cooling water, there is no justification for including these furnaces with those having wet systems, since any standard which would be fair to the 'wet' furnaces, would be excessively permissive to the 'dry' ones, and vice versa. For this reason, the categorization selected is partially based upon the type of air pollution control equipment, i.e., wet or dry.

Although another breakdown might be made based upon the types of wet air pollution control equipment such as high energy scrubbers, disintegrator scrubbers, electrostatic precipitators with water sprays, etc., this would unnecessarily multiply the number of categories and have too small an effect upon the total pollutant load from this industry to be warranted.

Production Processes

The various production processes vary markedly in their ability to pollute water, and this provides an additional basis for categorization. This basis consists of the differential in raw waste loads and concentrations between the slag processing operations and the electric furnace and exothermic processes. The electric furnace and exothermic processes are dry by nature, although water is used for cooling and possibly for air pollution abatement. The plant survey data obtained at an exothermic operation using wet air pollution control methods indicate that the water use per ton (when divided

by 3) is of the same order of magnitude as that of covered electric furnaces (per mwhr), and the exothermic operations were therefore included with the covered electric furnaces.

Although not properly a ferroalloy production process, slag processing is performed at many plants to recover the residual metal values left in the slag after the smelting, and helps reduce the solid waste load somewhat at these plants. This process is intrinsically different from the other production processes, inasmuch as it is inherently 'wet', and therefore merits a separate category. Additionally, the 'building block' approach, such as is used for establishing the allowable plant effluents herein, requires a separate category since all plants do not use such a process and the magnitude of the potential wasteload is substantial.

Furnace Types

The types of smelting furnaces were found to provide a basis for categorization in conjunction with consideration of water uses and other factors. The differences between open and covered or sealed electric smelting furnaces are significant insofar as they relate to the raw waste loads and the pollutants present and air pollution control technologies available for use. The off-gas volumes from the two types of furnaces may vary by a factor of 50 between the two types of furnaces, and cyanides are present in scrubber waters from the covered types, but not from the open type. The water uses for wet air pollution control devices may be quite different due to the differences in the off-gas volumes. Person's (5) published data show a difference in water circulation with venturi scrubbers by a factor of 24 between open and covered furnaces. The final volume of water flowing from the scrubbers on open or covered furnaces may not vary significantly; the plant survey data indicate, in fact, that the differences are not great and are probably more dependent on scrubber type than furnace type. The recirculation of water at the venturi scrubbers on open furnaces must be regarded as a part of the wastewater treatment methods and is so specified when effluent limitations for such sources are determined.

Additionally, dry dust collectors are widely used on open furnaces, and are more common than wet collectors. The converse is true with covered

furnaces. There are only two known examples of dry dust collectors being installed on covered or sealed furnaces, while the vast majority utilize wet air pollution controls.

Raw Materials

Depending on the product produced, the raw materials for the smelting operations vary principally in the types of ores and the proportions of the materials in the charge. For example, the charge for the HC ferromanganese consists of manganese ore, coke, and limestone, while the charge for HC ferrochromium consists of chromium ore, coke, quartzite and bauxite flux. There are no differences, however, in the raw materials used in the production of 50% ferrosilicon, whether it is produced in an open or covered furnace, although the covered furnace feed materials may require pretreatment. There are, of course, substantial differences in the charge into electric furnaces and the feed to slag processing operations.

TABLE 18. PRODUCTION AND EMISSION DATA FOR FERROALLOY FURNACES

Product	Uncontrolled Particulate Emissions				Electric Energy		Ratio of Charge to Product Weight
	kg/kkg alloy	lbs/ton alloy	kg/mwhr	lb/mwhr	mwhr/kkg alloy	mwhr/ton alloy	
Silvery iron	58	116	20.4	45	2.9	2.6	1.8
50% FeSi	223	446	40.4	89	5.5	5.0	2.5
65-75% FeSi	458	915	47.2	104	9.7	8.8	4.5
Si Metal	500-1000	1000-2000	33-65	72-144	15.4	14.0	4.9
SMZ	No data	No data	No data	No data	9.7	8.8	4.5
Mn ore/lime melt	67	133	37.7	83	1.8	1.6	3.5
CaSi	672	1343	51.7	114	13.0	11.8	3.9
HC FeMn	168	335	28.1	62	2.6	2.4	3.0
SiMn	110	219	22.7	50	4.9	4.4	3.1
FeMnSi	158	315	26.3	58	6.0	5.4	4.3
FeCrSi	416	831	50.8	112	8.2	7.4	3.4
Chg Cr	168	335	28.1	62	4.6	4.2	4.0
HC FeCr	168	335	28.1	62	4.6	4.2	4.0
Cr ore/lime melt	6	11	4.1	9	1.3	1.2	1.2

[EPA 440/1-74-008a, continued]

WASTE CHARACTERIZATION

The waste characteristics to be determined may be considered on the basis of the industry categories and the various water uses as follows:

1. Water for Wet Air Pollution Control Devices
   a. Electric Furnace Smelting
      i. Disintegrator-type Scrubbers
      ii. High Energy Scrubbers
      iii. Electrostatic Precipitator Spray Towers
      iv. Steam/Hot Water Scrubbers
   b. Exothermic Smelting Processes
2. Sanitary Uses, Boiler Feed, Air Conditioning, etc.
3. Slag Processing Uses

PUBLISHED DATA SOURCE CHARACTERIZATIONS

A total of 2,329,630 kkgs (2,568,500 tons) of ferroalloys were produced in 1967, using 11,206 million kw-hrs. of electric energy according to the 1967 Census of Manufactures. Of the total energy used, 3,354 million kw-hrs were generated by ferroalloy plants. Assuming miscellaneous losses and other uses of 15 percent, an average use of 4,089 kw-hrs per kkg (3,709 kw-hrs per ton of alloy in terms of furnace power is indicated.

Total water intake for S.I.C. 3313 plants was 1128.7×10^9 liters (298.2×10^9 gals.) per year according to the 1967 Census of Manufactures while gross water use was 1212.3×10^9 liters (320.3×10^9 gals.). Intake for cooling was 381.5×10^9 liters (100.8×10^9 gals.). Assuming that all water recirculation and reuse was for cooling, cooling water use was 465.2×10^9 liters (122.9×10^9 gals.). Cooling water use of 199,679 liters per kkg (47,849 gal. per short ton) of alloy, or 48.8 liters (12.9 gals.) per kw-hrs. of furnace power is indicated.

The 1967 Census of Manufactures indicates a water use of 701.4×10^9 liters (185.3×10^9 gals.) of water in generating the aforementioned 3,354 million kw-hrs. of electric energy in-plant. The indicated use of 203.9 liters (55.2 gals.) per kw-hrs. is about equal to the 1964 thermal electric power plant use of 215 liters (56.8 gals.) per kw-hr. (Final Report, EPA Contract 68-01-0196). Assuming losses and other uses at 15 percent, a water use of 245.6 liters (64.9 gals.) per kw-hr. of furnace power is indicated for in-plant power generation.

The 1967 census data indicate a use of 40.9×10^9 liters (10.8×10^9 gals.) per year for sanitary, boiler feed, air conditioning, and other minor uses and plant employment of 8,700. At 378.5 liters (100 gals.) per capita per day, 250 days per employee per year, sanitary use would have been 825×10^6 liters (218×10^6 gals.) per year; air conditioning use was 757×10^6 liters (200×10^6 gals.) per year. These uses total 4.28 liters (1.13 gals.) per kw-hr. of furnace power, assuming losses and other uses at 15 percent.

Person's data (5) indicate the water use in high energy scrubbers on open furnaces as 113.6 1/sec (1,800 gpm) for each of three furnaces producing FeCrSi, SiMn, and HC FeCr and rated at 25, 30 and 30 mw, respectively. At an assumed operating load of 75% with 95% operating time, the indicated water use is 1,226,340 liters (324,000 gals.) per 60.6 mw-hrs., or 20,238 liters (5,347 gals.) per mw-hr. of furnace power.

Person's data further indicated an average use of 5.5 1/sec (87.5 gpm) for a high energy scrubber on a semi-closed 45 mw 50% FeSi furnace. At 95% operating time and 75% operating load, the indicated water use is 620.7 liters (164 gals.) per mw-hr. of furnace power.

According to Retelsdorf, et al. (6) an electrostatic precipitator installed on a 20 mw ferrochromesilicon furnace uses water in a spray tower preceding the precipitator at the rate of about 9,084 liters (2,400 gals.) per hour. This indicates a use of 635.9 liters (168 gals.) per mw-hr. of furnace power at 95% operating time and 75% operating load. About 10-15% of the water used is discharged from the bottom of the spray tower, the remainder being evaporated into the gas stream. These data indicate about 556.4 liters (147 gals.) of water per mw-hr. of furnace power evaporated in the gas stream.

From the above data and those given in Section III, some limited calculations of waste characteristics may be made.

Assuming that 556 liters (147 gals.) of water per mw-hr. of furnace power is evaporated in the gas streams from open furnaces using wet air pollution control devices and that such evaporation in the case of covered furnaces is in proportion to the gas volume, the effluent volumes expected would be as follows:

High energy scrubbers (open furnace) = 19,682 l/mw-hr (5200 gal/mw-hr)
High energy scrubbers (covered furnace) = 609 l/mw-hr (161 gal/mw-hr)
Electrostatic precipitator = 79.5 l/mw-hr (21 gal/mw-hr)

On the basis of the data given in Section III on production processes, compositions of raw materials, and compositions of products and byproducts, the following constituents/parameters appear to be those potentially present in waste water:

Acidity	Columbium	Potassium
Alkalinity	Cyanide	Radioactivity
Aluminum	Dissolved Solids	Silica
Ammonia	Iron	Sulfates
Barium	Magnesium	Suspended Solids
B. O. D.	Manganese	Temperature
Calcium	Molybdenum	Titanium
Chromates	pH	Vanadium
Chromium	Phosphates	Zirconium

WASTE CHARACTERIZATIONS FROM DISCHARGE PERMIT DATA

Waste constituents/parameter listed as present in discharge permit applications for the plants in S.I.C. 3313 are as follows:

Algicides	Fluorides	Sodium
Aluminum	Hardness	Solids
Ammonia	Iron	Sulfate
Barium	Magnesium	Sulfite
Boron	Manganese	Surfactants
Chloride	Nitrate	Titanium
Chromium	Oil and Grease	Turbidity
Color	Organic N	Zinc
Copper	Phosphorous	

Additionally, pH and temperature are given as waste parameters.

WASTE CHARACTERIZATIONS FROM PLANT SURVEY DATA

Waste characteristics were determined where possible from the plant survey data for various specific waste producing sources. These data, of course, apply to the particular units operating as they were during the sampling period and represent the type of result to be expected during the actual operation. To the extent possible, reasons for variations are explained.

WASTE CHARACTERIZATION - OPEN ELECTRIC FURNACES WITH WET AIR POLLUTION CONTROL DEVICES

The data from Plant D provide raw waste loads for open submerged-arc furnaces in which the offgases are scrubbed with steam/hot water scrubbers as shown in Table 21.

TABLE 21. RAW WASTE LOADS-OPEN CHROMIUM ALLOY AND FERROSILICON FURNACES WITH STEAM/HOT WATER SCRUBBERS

Constituent	kg/mwhr	lbs/mwhr
Suspended Solids	8.2	18.1
Manganese	.005	0.010
Cr, total	.003	0.007
Cr, bex.	.002	0.004
	l/mwhr	gals/mwhr
Flow	2,691	711

The data from Plant E provide an additional raw waste load for an open electric furnace using a venturi scrubber, as shown in Table 22.

TABLE 22. RAW WASTE - HIGH ENERGY SCRUBBER ON OPEN ELECTRIC FURNACE

Constituent	kg/mwhr	lbs/mwhr
Suspended Solids	23.74	52.29
Manganese	10.06	22.15
Chromium (Total)	0.002	0.005
	l/mwhr	gals/mwhr
Flow	6,382	1,686

The data from Plant C providing raw waste loads for open submerged-arc furnaces in which the off-gases are conditioned in a spray tower preceding an electrostatic precipitator are shown in Table 23.

TABLE 23. RAW WASTE LOADS-OPEN CHROMIUM ALLOY FURNACES WITH ELECTROSTATIC PRECIPITATORS

Constituent	kg/mwhr	lbs/mwhr
Suspended Solids	.289	0.636
Manganese	.0012	0.0026
Chromium, total	.0016	0.0036
	l/mwhr	gals/mwhr
Flow	84.0	22.2

Although the data as given in Table 23 for water flow agree quite well with that predicted (84.0 vs 79.5 l/mwhr) (22.2 vs 21 gal/mwhr), and the flow rate from the steam/hot water scrubbers cannot be compared with anything, the values for flow from the high energy scrubber are about one-third of that predicted. However, the flow from the high energy scrubber does not take into account recirculation of the scrubber water which is done at the scrubber prior to clarification and which may account for the difference.

WASTE CHARACTERIZATION-COVERED ELECTRIC FURNACES WITH WET AIR POLLUTION CONTROL DEVICES

The data from Plant B provide information on the waste water from disintegrator scrubbers operating on covered furnaces producing silicon alloys. Raw waste loads of suspended solids and cyanides are given in Table 24 on the basis of the furnace power during the 16-hour sampling periods.

TABLE 24. RAW WASTE LOADS FOR COVERED FURNACES WITH DISINTEGRATOR SCRUBBERS

	Suspended Solids		Cyanides		Flow	
Product	kg/mwhr	lbs/mwhr	kg/mwhr	lbs/mwhr	l/mwhr	gal/mwhr
SiMnZr	20.1	44.3	.0338	.0745	8270	2185
75% FeSi	39.2	86.3	--	--	8967	2369
50% FeSi	5.1	11.3	.0001	.0002	8823	2331
75% FeSi	6.8	15.0	.0139	.0307	7562	1998

The data for the second furnace in Table 24 probably represent reliable data, since at 75% particulate removal efficiency the suspended solids load is somewhat higher than those given in the EPA air pollution study (Ref. 32) data. The remaining data in Table 24 indicate suspended solids loads much lower than would be expected from the air emissions data. This could have occurred due to poor functioning of the scrubbers (as evidenced by the lower temperature of the effluent water and observations of visible stack emissions, sometimes very heavy). Another possible explanation is that the samples may have been taken in a region where water sprays are used to suppress foaming, and could, therefore, have been diluted.

The data from Plant C provides raw waste load data for a sealed silicomanganese furnace where the off-gases are scrubbed in a spray tower and a disintegrator scrubber. These data are shown in Table 25.

TABLE 25. RAW WASTE LOADS-SEALED SILICOMANGANESE FURNACE WITH DISINTEGRATOR SCRUBBER

Constituent	kg/mwhr	lb/mwhr
Suspended Solids	16.6	36.6
Phenol	.009	.019
Cyanide, total	.044	.098
Cyanide, free	.011	.024
Chromium, total	.0004	0.001
Manganese	4.858	10.70
	l/mwhr	gals/mwhr
Flow	10,863	2,870

The data from Plant E also provide data on scrubber raw waste water loads from covered furnaces equipped with high energy and disintegrator scrubbers.

TABLE 26. RAW WASTE LOAD-COVERED FURNACES WITH SCRUBBERS

Constituent	kg/mwhr	lbs/mwhr
Susp. Solids	4.01	8.83
Phenol	0.002	0.004
Cyanide (Total)	0.007	0.015
Manganese	0.016	0.034
Chromium (Total)	0.002	0.004
	l/mwhr	gals/mwhr
Flow	9,746	2,575

The data from Plant H provide data on the raw waste loads from alumino-thermic production of chromium alloys in which the offgases are treated in a combination wet scrubber and baghouse and are given in Table 27.

TABLE 27. RAW WASTE LOADS-ALUMINOTHERMIC SMELTING WITH COMBINATION WET SCRUBBERS AND BAGHOUSE

Constituent	kg/kkg	lb/ton
Suspended Solids	3.6	7.1
Phenol	0	0
Cyanide (Total)	0	0
Cyanide (Free)	0	0
Manganese	0.0005	0.001
Chromium (Total)	2.98	5.95
Chromium (Hex.)	0.95	1.90
	l/kkg	gals/ton
Flow	26,332	6,310

Since open furnaces produce greater volumes of gas than do covered furnaces, and since water usage in wet scrubbers is generally a function of gas volume treated, it was expected that open furnace scrubbers would have higher water usages than covered furnace scrubbers. Contrary to expectations, the covered furnaces which were surveyed had water uses higher than those of open furnaces using high energy scrubbers. This may be because water use in disintegrator scrubbers is higher, for a particular gas volume, than the water use in high energy scrubbers. Most of the covered furnaces surveyed used disintegrator, rather than high energy scrubber, and the water

use on that equalled 9572 l/mwhr (2529 qal/mwhr), so it would seem that this explanation may not always be valid.

WASTE CHARACTERIZATION - SLAG PROCESSING

The data from Plant E provide information on the raw waste loads from slag processing operations. That from slag concentrating is shown in Table 28.

TABLE 28. RAW WASTE LOADS-SLAG CONCENTRATION PROCESS

Constituent	kg/kkg	lb/ton
Suspended Solids	46.0	91.9
Manganese	.245	.489
Chromium, (Total)	.109	.217
	l/kkg	gals/ton
Flow	48,259	12,750

No raw waste load can be calculated directly for the slag shotting process, since tonnage figures were not given. However, an estimate for tonnage can be made from production figures. The charge to alloy ratio is 3:1 for HC FeMn, meaning that three tons of charge materials are required to produce one ton of alloy. Assuming no losses, this means that two tons of slag and particulates are produced for every ton of alloy. The emission factor of HC FeMn is 335 lb/ton product, so the slag produced is two tons minus 335 lbs = 3665 lb/ton alloy. This figure times operating load divided by the electrical energy required per ton of alloy gives us an hourly production figure for slag of 24,452 lb/hr. This divided into the water flow rate gives a water use of 8,588 gal/ton processed, a suspended solids raw waste load of 15.5 lb/ton, and a manganese load of 3.87 lb/ton.

SELECTION OF POLLUTANT PARAMETERS

Pollutant parameters have been selected by industry categories on the basis of those which originate in the production processes in significant amounts and for which control and treatment technologies are reasonably available. The parameters for each category have also been selected so as to be the minimum number which will insure control. The pollutant parameters selected are shown by category in Table 29.

TABLE 29. POLLUTANT PARAMETERS FOR INDUSTRY CATEGORIES

Parameters	Industry Category		
	I	II	III
Suspended Solids	X	X	X
pH	X	X	X
Total Chromium	X	X	X
Hexavalent Chromium	X	X	-
Total Cyanide	-	X	-
Manganese	X	X	X
Phenol	-	X	-

Although effluent flow volumes are not specified in the recommended guidelines, its measurement and control is implicit in attaining the pollutant effluent loads specified. Flow, of course, is a basic parameter in that its magnitude indicates the degree of recirculation and reuse practiced and the degree to which water conservation is utilized. Additionally, flow measurements will be necessary for calculating treated waste loads for monitoring purposes.

Oil is not here considered as a parameter because it was found in lower concentrations in the raw waste than were allowable by the proposed guidelines. Additionally, oil is not associated with the process itself, but only appears as leaks from machinery, etc. At the levels detectable by the NPDES test methods, oil would be visible as a light sheen, and the plant would realize that there was an oil leakage somewhere.

Suspended solids are primary pollutants resulting from wet air pollution control devices and slag processing. Suspended solids concentrations may range up to 7600 mg/l. The pH determination in conjunction with metals determinations indicates that excessive free acidity or alkalinity has been neutralized after chromate reduction and precipitation, or cyanide destruction.

Chromium, mangaense, iron, zinc, and aluminum are the principal metals originating in the production processes. Manganese concentrations may be as high as 1576 mg/l, while the maximum chromium concentrations found were 8.36 mg/l from an electrostatic precipitator spray tower and 121 mg/l from

an exothermic chromium smelting operation. Hexavalent chromium is additionally included because it may be harmful at low levels.

Cyanide is not oxidized in the reducing atmospheres of covered furnaces and appears in the waste water. It must be considered in view of the potential danger as with hexavalent chromium.

Phenols evidently originate from electrode binding materials and are considered because of the taste-and-color producing potential of even low concentrations of such compounds. They principally appear in the waste water from covered furnaces, although very small quantities may be present in that from open furnaces. It would seem that phenols are oxidized in open furnaces, but not in the reducing atmosphere of covered furnaces. Because they are evidently oxidized in open furnaces, phenols are not considered as a pollutant parameter for Category I.

Phosphate was originally considered as a pollutant parameter because it was present in some quantity in the wastewaters at a few plants. Examination of the data base for this pollutant, however, convinces us that it is generally present in fairly low concentrations in the raw waste, and drops out during treatment (even the rudimentary treatment given at some plants) to levels allowable by the proposed guidelines. Therefore, phosphate was dropped as a parameter after consideration of the costs of monitoring for a pollutant which will probably never exceed the guidelines.

The pollutant parameters chosen have been those which appeared in significant concentrations from the sampling and analysis conducted during the plant surveys, and are those parameters amenable to control. Other parameters such as dissolved solids, chlorides and sulfates appear in effluents, but largely result from neutralization, softener regeneration, and water reuse; they are thus a result of treatment and contained in the raw waste, particularly iron, zinc, aluminum, and lead are part of the solids generated in the smelting furnaces. Plant survey data indicate that they are controlled if suspended solids concentrations are controlled.

CONTROL AND TREATMENT TECHNOLOGY

The water pollution control and treatment technology used in the ferroalloy industry has generally been sedimentation in lagoons, some of which are very large. The 8 plants which were surveyed in the course of the

present study cover the full range of processes used in the industry and the various levels of control and treatment technology.

By far the most serious pollution problem to the industry has been that of air pollution. Air pollution abatement has been a major concern of the industry and has involved most of the expenditures for pollution control. Air pollution control systems installed, being built, or planned are generally capable of meeting existing state regulations; in cases where controls have been installed for 5 years or more, such controls were adequate to meet then-existing regulations, but may be marginal insofar as newer regulations are concerned.

The plants surveyed are classified in Table 30 in terms of the industry categorization given previously.

TABLE 30. CHARACTERISTICS OF SURVEYED PLANTS

Plant	Category	Processes and Water Uses and Air Controls
A		Baghouses being built, recirculated cooling water
B	II	Disintegrator scrubbers, once-through cooling water use
C	II	Sealed furnace, disintegrator scrubbers, recirculated cooling water and scrubber water
D	I	Steam/hot water scrubbers, recirculation of cooling and scrubber water
E	I,II,III	Disintegrator scrubbers, venturi scrubbers, once-through water use, slag processing
F		Baghouse/no air controls, recirculated cooling water
G	I,III	Electrostatic precipitators with water sprays, recirculated cooling water, slag processing
H	II	Exothermic process, wet scrubbers and baghouse

The treatment and control technologies available for this industry's waste water may be grouped as follows for the principal waste parameters:

Suspended Solids: Water recirculation, lagoons, clarifier-flocculators, and filters

pH: Neutralization

Chromium: Hexavalent chromium reduction, precipitation, sedimentation

Cyanide: Alkaline chlorination, ozonation

Manganese: Neutralization of acid salts, precipitation, sedimentation

Phenol: Biological oxidation, breakpoint chlorination, activated carbon

Water recirculation can be used to initially reduce the volume of water to be treated for suspended solids removal. Lagoons and clarifier-flocculators can achieve effluent concentrations of 25 mg/l, when well operated. Lagoons are less expensive in capital and operating costs, but require much more land area. Sand filters achieve effluent concentrations of 10-15 mg/l and are little more expensive than clarifier-flocculators.

Neutralization is, of course, simply a matter of adding an acid or a base to achieve a neutral pH. This is most efficiently done with chemical feed pumps controlled by a pH instrument. A caustic or sulfuric acid solution can be used and pH controlled to within ± 0.2 of the desired pH.

Hexavalent chromium is reduced almost instantaneously at pH levels below 2.5 by sulfur dioxide. The pH is then raised with lime to about pH 8.2 and the reduced chromium is settled out. With proper operation, the hexavalent chromium should be completely reduced. The effluent concentration of total chromium depends upon good pH control and adequate sedimentation. Cyanide is oxidized rapidly to the less harmful form of cyanate at a pH of 10.5 by alkaline chlorination. Cyanate is oxidized to CO_2 and N_2 by continued chlorination at a pH of about 7.0 and a reaction time of about 60 minutes. Ozonation is an alternate method for the destruction of cyanide.

Manganese and iron, to the extent they are present as dissolved salts, are removed by neutralization of the acid salts, at a pH above 9.5 for manganese and above about 8 for iron. This is followed by precipitation and sedimentation. Ferrous hydroxide, in particular, forms a gelatinous precipitate which settles slowly. Sufficiently high pH, adequate sedimentation, and oxidation is required for low effluent concentrations.

Phenol can be oxidized biologically or chemically by chlorine and chlorine dioxide (Ref. 34). Chlorine dioxide must, of course, be generated on-site. Phenol can also be removed by absorption on activated carbon. Biological oxidation may be unfeasible for this industry with its generally low BOD levels, although it may be usable if nutrients are added. Activated

carbon absorption is also possible as a treatment techique, as is breakpoint chlorination.

The treatment processes discussed here are conventional. There does not appear to be any particular need for more advanced treatment methods. The main problems are the reduction of wastewater volumes requiring treatment to the minimum, design of adequately sized facilities (particularly for suspended solids removal), proper operation (preferably with instrumental control), and operator training.

The choice of air pollution control technology is of importance in affecting waste water volumes. Most open furnaces are utilizing dry baghouse and, of course, produce no wastewater effluent from this source.

There are only two known examples in the world of dry dust collectors being used on sealed or covered furnaces, neither of which is in the United States. The vast majority of covered furnaces use wet scrubbers; few open furnaces use wet systems. Some operations (such as exothermic) may require the use of such novel air systems as a wet baghouse.

Where a dash is shown under net concentration in Tables 31-89, except for those tables for intake water, no analysis was made for that parameter. Where a zero is shown under net concentration, but the maximum, minimum and average concentrations are represented by dashes, the parameter concentrations found were below the detectable limit for that parameter. In other cases where the net concentration is zero, it is because the average concentration is the same as or less than that of the intake water.

The test methods used for the constituents of the waters are as follows: pH - Standard Method No. 221, Aluminum, Chromium, Iron (Total), Lead, Manganese, and Zinc - Standard Method No. 129 (Atomic Absorption), Cyanide - Standard Method Nos. 207A, 207C, Phenol - Standard Method Nos. 22A, 22B, and 22D, Phosphate - Standard Method No. 223E, and Suspended Solids - Standard Method No. 148C. With the exception of the test procedure for suspended solids, the tests used are identical with those specified for use for monitoring under the NPDES system (38 C.F.R., Part 136). The test for suspended solids gives results within the experimental error of the NPDES test method. 'Standard Method' refers to methods contained in "Standard Methods for

Examination of Water and Wastewater," Thirteenth Edition, 1971, American Public Health Association.

PLANT A

This plant was built in 1952 with five 10 mw submerged-arc open furnaces; at the time of our visit, three of these furnaces were still operating. A 35 mw furnace was built in 1968, and a 20 mw furnace is currently under construction. The large furnace produces 50-85 percent base alloys, and a rare earth silicide. Chromium alloys have been produced in the past. No wet air pollution controls are used; baghouses are being installed. The water use system is as shown in Figure 7.

All plant water is supplied from wells and the furnace cooling water is recirculated. The No. 1 cooling tower was built in 1952 and serves the three 10 mw furnaces. It is being automated and modified to include softeners and strainers, similar to the No. 2 cooling tower. The No. 2 cooling tower was built in 1968 to serve the 35 mw furnace. Proprietary treatment chemicals and sulfuric acid are used in each system. Blowdown from the No. 1 tower is manual and from No. 2 tower is automatically controlled by total solids levels. A softener is used in the No. 2 tower system with bulk salt used as a regenerant. Recirculated flow in the No. 1 tower system is 227 l/sec (3600 gpm) and can be increased to 341 l/sec (5400 gpm) if required by cooling needs. Recirculation flow in the No. 2 tower system is 284 l/sec (4500 gpm). The total furnace power during the sampling period was 48.1 mw. The cooling water use was thus 38.2 liters (10.1 gals.) per kwhr. Other furnaces exist in the plant, but have not been recently operated, and there are no plans to reactivate them. The treatment facilities consist only of a settling lagoon insofar as removal of constituents from the cooling tower blowdown and miscellaneous yard drainage is concerned.

A storm sewer had been installed to bypass storm run off originating in the hills behind the plant. This has reduced the wet weather flow through the treatment lagoon.

Summarized data from the plant survey are shown for various sampling points as designated in Figure 7 in Tables 31 through 35. The temperature drop across cooling tower No. 1 was determined to be 6.7°C (12°F). The operating power on the furnaces served by this tower during the sampling period was 21.9 mw.

TABLE 31. ANALYTICAL DATA -SPA- PLANT A
LAGOON INFLUENT

Constituent	Concentrations, mg/l (except as noted) Minimum	Maximum	Average	Net Average
Suspended Solids	50	440	183	170
Total Chromium	0.01	0.01	0.01	0.01
Hexavalent Chromium	-	-	-	-
Total Cyanide	-	-	-	0
Free Cyanide	-	-	-	0
Manganese	1.08	1.08	1.08	0.76
Oil	1.8	6.4	4.3	3.5
Iron	0.99	1.78	1.39	1.36
Zinc	0.07	0.07	0.07	0.03
Aluminum	0.33	0.33	0.33	0.33
Phenol	0.07	1.00	0.40	0.06
Phosphate	1.29	3.09	2.42	2.34
Lead	-	-	-	0
pH (units)	5.4	7.6	6.7	-

Average Flow = 6.7 l/sec. (106 gpm)

TABLE 32. ANALYTICAL DATA -SPL- PLANT A
LAGOON EFFLUENT

Constituents	Concentrations, mg/l (except as noted) Minimum	Maximum	Average	Net Average
Suspended Solids	20	440	73	60
Total Chromium	-	0.01	-	0
Hexavalent Chromium	-	-	-	0
Total Cyanide	-	-	-	0
Free Cyanide	-	-	-	0
Manganese	0.91	1.15	1.07	0.75
Oil	1.4	58.6	25.9	25.1
Iron	1.71	2.06	1.85	1.82
Zinc	0.05	0.06	0.05	0.01
Aluminum	-	-	-	0
Phenol	0.34	0.71	0.49	0.15
Phosphate	1.01	1.35	1.12	1.84
Lead	-	-	-	0
pH (units)	5.7	7.6	7.0	

Average Flow = 6.7 l/sec. (106 gpm)
Average Temperature = 13.3°C (56°F)

TABLE 33. ANALYTICAL DATA -SPC- PLANT A
COOLING TOWER #2

Constituent	Concentrations, mg/l (except as noted) Minimum	Maximum	Average	Net Average
Suspended Solids	34	38	36	23
Total Chromium	-	-	-	0
Hexavalent Chromium	-	-	-	0
Total Cyanide	-	-	-	0
Free Cyanide	-	-	-	0
Manganese	0.32	0.32	0.32	0
Oil	0.4	1.0	0.7	0
Iron	0.23	0.36	0.30	0.27
Zinc	0.03	0.08	0.05	0.01
Aluminum	-	-	-	0
Phenol	0.04	0.57	0.22	0
Phosphate	5.26	5.79	5.47	5.39
Lead	-	-	-	0
pH (units)	6.9	7.8	7.3	

Average Flow = l/sec. (gpm)

TABLE 34. ANALYTICAL DATA -SPD- PLANT A
COOLING TOWER #1

Constituents	Concentrations, mg/l (except as noted) Minimum	Maximum	Average	Net Average
Suspended Solids	14	500	183	170
Total Chromium	-	-	-	0
Hexavalent Chromium	-	-	-	0
Total Cyanide	-	-	-	0
Free Cyanide	-	-	-	0
Manganese	0.53	0.53	0.53	0.21
Oil	0.4	0.8	0.6	0
Iron	0.34	0.38	0.36	0.33
Zinc	0.03	0.055	0.039	0
Aluminum	-	-	-	0
Phenol	0.07	0.57	0.31	0
Phosphate	4.47	5.26	4.83	4.75
Lead	-	-	-	0
pH (units)	6.6	8.3	7.4	

Average Flow = 1.55 l/sec. (24.6 gpm)
Average Temperature = 15.6°C (60°F)

TABLE 35. ANALYTICAL DATA -SPL- PLANT A
WELL WATER

Constituent	Concentrations, mg/l (except as noted) Minimum	Maximum	Average	Net Average
Suspended Solids	8	16	13	-
Total Chromium	-	-	-	-
Hexavalent Chromium	-	-	-	-
Total Cyanide	-	-	-	-
Free Cyanide	-	-	-	-
Manganese	0.32	0.32	0.32	-
Oil	0.6	1.0	0.8	-
Iron	-	0.06	0.03	-
Zinc	0.022	0.07	0.044	-
Aluminum	-	-	-	-
Phenol	0.30	0.41	0.34	-
Phosphate	-	0.14	0.08	-
Lead	-	-	-	-
pH (units)	6.9	7.7	7.3	-

Average Flow = l/sec. (gpm)

PLANT B

This plant has been operating since 1939 and has four covered submerged-arc furnaces producing 50 percent ferrosilicon, 75 percent ferrosilicon and silicon-manganese-zirconium (SMZ). These furnaces have a total rating of 71.0 mw and operated during the plant survey period at 54.3 mw. The water and waste water system for the plant is shown in Figure 8.

The four covered furnaces use cooling water on a once-through basis and the sewage by the 350 employees is treated at an on-site plant. The total effluent is 30,282 cu. m/day (8 mgd). Water is drawn from a surface source.

The fumes from the four furnaces are scrubbed using seven Buffalo Forge (disintegrator) scrubbers, each using 15.78 l/sec (250 gpm) of water. During the plant survey, one furnace had only one scrubber, each of the other furnaces had 2 scrubbers; a second scrubber was being installed on the first furnace. The scrubber water is combined at a lift station where lime and chlorine are added to oxidize the cyanides produced in the covered furnace. The scrubber water then flows through 2 lagoons in series totaling 30.5 acres in area and providing 5-6 days retention. The flow then goes to a clariflocculator where lime and a flocculant are added for improved sedimentation. The clariflocculator underflow is returned to the first lagoon and the clariflocculator effluent is treated with chlorine, lime being added if necessary, to destroy residual cyanides. The clariflocculator overflow effluent then passes through 2 additional lagoons in series totaling 3.2 acres in area. The treated scrubber water is then combined with cooling water, sewage plant effluent, and yard drainage and flows through a final lagoon 0.25 acres in area. The cooling water temperature averages 8.33°C (15°F) above ambient. (The plant states that the average temperature rise of the cooling water is 4-5.5°C (7-20°F).)

The total plant effluent was determined by measurements over a rectangular weir and the sewage plant effluent was measured by bucket and stopwatch. The yard drainage flow was estimated. The furnace cooling water flow was determined by difference and checked by a calculated chloride balance. The discharge permit data for this plant indicated a cooling water flow of 378.6 l/sec (6,000 gpm) and recirculation of some of this water. There is no chloride buildup and a low temperature increment in this system. The plant

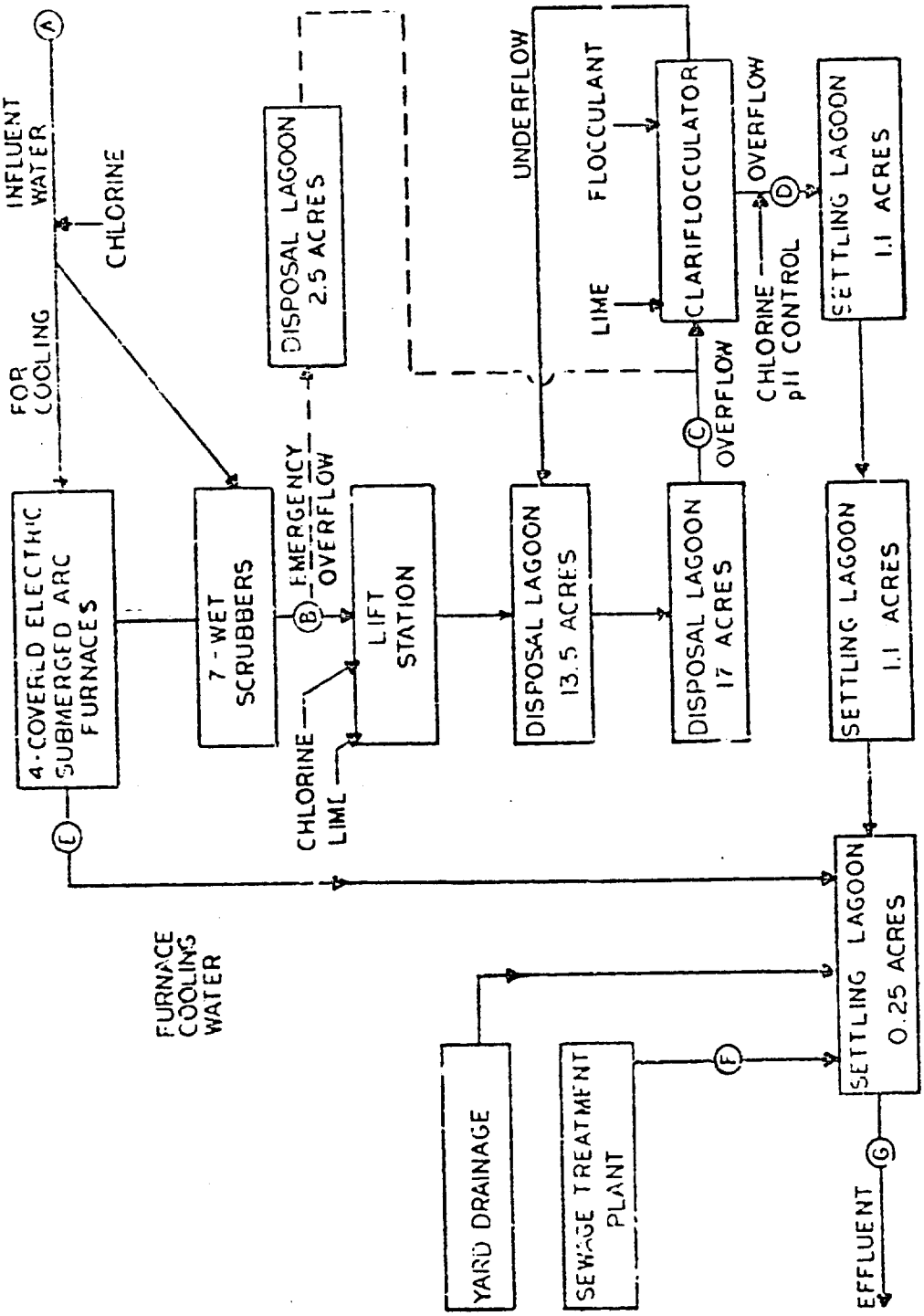

Figure 8. Plant B Water and Wastewater Systems.

states that there is no evaporation associated with recirculation, which is done to increase water velocity in cooling passages. This recirculation may account for some of the difference between discharge permit data and that found during the plant survey. In light of the low temperature increment, however, it is doubtful that 43 percent of the cooling water is recirculated and the flow obtained during the plant survey was judged to be correct.

The total operating loads on the furnaces during the sampling was 54.3 mw. Summarized analytical data are shown for the sampling points as designated in Figure 8 in Tables 36 through 42.

TABLE 36. ANALYTICAL DATA -SPA- PLANT B
INTAKE WATER

Constituents	Concentrations, mg/l (except as noted) Minimum	Maximum	Average	Net Average
Suspended Solids	4	38	20	-
Total Chromium	-	-	-	-
Hexavalent Chromium	-	-	-	-
Total Cyanide	-	0.016	0.005	-
Free Cyanide	-	-	-	-
Manganese	0.018	0.018	0.018	-
Oil	0.4	1.5	0.8	-
Iron	1.31	1.37	1.34	-
Zinc	0.02	0.02	0.02	-
Aluminum	-	-	-	-
Phenol	-	-	-	-
Phosphate	0.23	0.23	0.23	-
Lead	-	-	-	-
pH (units)	6.5	7.7	6.9	-

Average Flow = 353 l/sec. (5,600 gpm)

TABLE 37. ANALYTICAL DATA -SPL- PLANT B
WET SCRUBBERS

Constituent	Concentrations, mg/l (except as noted) Minimum	Maximum	Average	Net Average
Suspended Solids	968	2,242	1,555	1,535
Total Chromium	-	-	-	0
Hexavalent Chromium	-	-	-	0
Total Cyanide	1.18	3.28	2.49	2.48
Free Cyanide	0.20	1.57	1.04	1.03
Manganese	15.9	38.6	24.0	24.0
Oil	2.4	7.6	4.5	3.7
Iron	6.1	8.9	7.8	6.5
Zinc	1.46	3.10	2.10	2.08
Aluminum	0.69	1.29	0.99	0.99
Phenol	5.62	9.05	7.27	7.27
Phosphate	0.54	2.25	1.11	0.88
Lead	1.43	1.96	1.71	1.71
pH (units)	6.2	6.4	6.3	

Average Flow = 126 l/sec. (2,000 gpm)

TABLE 38. ANALYTICAL DATA -SPC- PLANT B
THICKENER INLET

Constituents	Concentrations, mg/l (except as noted) Minimum	Maximum	Average	Net Average
Suspended Solids	70	96	83	63
Total Chromium	-	-	-	-
Hexavalent Chromium	-	-	-	0
Total Chromium	0.15	0.36	0.22	0.21
Free Cyanide	0.15	0.36	0.22	0.21
Manganese	2.58	2.97	2.84	2.82
Oil	0.6	2.2	1.2	0.4
Iron	0.79	1.14	0.95	0
Zinc	0.94	1.08	1.01	0.99
Aluminum	-	0.29	0.19	0.19
Phenol	0.43	0.44	0.43	0.43
Phosphate	0.45	0.54	0.51	0.28
Lead	-	-	-	0
pH (units)	6.3	6.9	6.6	

Average Flow = 126 l/sec. (2,000 gpm)

Table 39. ANALYTICAL DATA -SPD- PLANT B
THICKENER OVERFLOW

Constituent	Concentrations, mg/l (except as noted) Minimum	Maximum	Average	Net Average
Suspended Solids	8	86	56	36
Total Chromium	-	0.01	-	0
Hexavalent Chromium	-	-	-	0
Total Cyanide	0.15	0.34	0.21	0.20
Free Cyanide	0.15	0.34	0.21	0.20
Manganese	0.88	0.93	0.90	0.88
Oil	1.2	3.0	2.2	1.4
Iron	0.41	0.50	0.47	0
Zinc	0.38	0.39	0.38	0.36
Aluminum	-	-	-	0
Phenol	0.49	0.51	0.50	0.50
Phosphate	0.27	0.54	0.41	0.18
Lead	-	0.05	0.03	0.03
pH (units)	8.2	9.6	9.0	

Average Flow = 126 l/sec. (2,000 gpm)

TABLE 40. ANALYTICAL DATA -SPL- PLANT B
COOLING WATER

Constituents	Concentrations, mg/l (except as noted) Minimum	Maximum	Average	Net Average
Suspended Solids	4	22	11	0
Total Chromium	-	-	-	0
Hexavalent Chromium	-	-	-	0
Total Cyanide	0.006	0.061	0.025	0.020
Free Cyanide	-	-	-	0
Manganese	0.025	0.025	0.025	0.007
Oil	0.6	0.8	0.7	0
Iron	1.20	1.34	1.27	0
Zinc	0.014	0.044	0.044	0.024
Aluminum	0.47	0.47	0.47	0.47
Phenol	-	-	-	0
Phosphate	0.22	0.22	0.22	0
Lead	-	-	-	0
pH (units)	6.7	8.5	7.9	

Average Flow = 217 l/sec. (3,400 gpm)

TABLE 41. ANALYTICAL DATA -SPF- PLANT B
SEWAGE PLANT EFFLUENT

Constituent	Concentrations, mg/l (except as noted) Minimum	Maximum	Average	Net Average
Suspended Solids	20	48	32	12
Total Chromium	0.01	0.01	0.01	0.01
Hexavalent Chromium	-	-	-	0
Total Cyanide	-	-	-	0
Free Cyanide	-	-	-	0
Manganese	1.52	1.52	1.52	1.50
Oil	1.0	2.6	2.0	1.2
Iron	0.33	1.31	0.82	0
Zinc	0.11	0.11	0.11	0.09
Aluminum	0.33	0.33	0.33	0.33
Phenol	-	-	-	0
Phosphate	6.31	6.31	6.31	6.08
Lead	-	-	-	0
pH (units)	6.6	7.6	7.2	

Average Flow = 1.0 l/sec. (16 gpm)

TABLE 42. ANALYTICAL DATA -SPG- PLANT B
TOTAL PLANT DISCHARGE

Constituents	Concentrations, mg/l (except as noted) Minimum	Maximum	Average	Net Average
Suspended Solids	10	70	35	15
Total Chromium	-	0.02	0.01	0.01
Hexavalent Chromium	-	-	-	-
Total Cyanide	0.006	0.030	0.020	0.015
Free Cyanide	0.006	0.020	0.010	0.010
Manganese	0.20	0.22	0.21	0.19
Oil	1.0	2.6	1.6	0.8
Iron	0.24	0.28	0.27	0
Zinc	0.08	0.11	0.09	0.07
Aluminum	0.22	0.35	0.30	0.30
Phenol	0.11	0.12	0.12	0.12
Phosphate	0.30	0.33	0.31	0.08
Lead	-	-	-	0
pH (units)	8.1	9.2	8.5	

Average Flow = 350 l/sec. (5,556 gpm)
Average Temperature = 20.8°C (69.4°F)

PLANT C

This plant was built in 1967 and has a single sealed furnace rated at 33 mw. The principal product is silicomanganese.

The water use and waste treatment system is shown in Figure 9. The furnace offgases are scrubbed in a spray tower and a low energy (Dingler) scrubber. Water is recycled and reused in both the scrubber system and the furnace cooling water system; the latter incorporates a cooling tower. Makeup for the scrubber system is attained from blowdown from the cooling water system. The scrubber effluent is treated with potassium permanganate to oxidize the cyanides and a flocculant aid to improve sedimentation in the thickener to which all of the scrubber water flows. The thickener overflow is recycled to the scrubbers and the underflow is treated in a series of 2 lagoons. The effluent of these lagoons and the cooling tower blowdown are combined and flow through 2 additional lagoons in series. The sanitary sewage is treated in a package-type plant and allowed to settle in a small lagoon before being combined with the industrial waste water for discharge. The cooling tower recirculation rate is 163 l/sec. (2580 gpm). The temperature drop across the cooling tower is 14°C (25.2°F).

Summarized analytical data are shown for the designated sampling points in Tables 43 throgh 49.

TABLE 43. ANALYTICAL DATA -SPA- PLANT C
WELL WATER

Constituent	Concentrations, mg/l (except as noted)			
	Minimum	Maximum	Average	Net Average
Suspended Solids	-	2	1	-
Total Chromium	-	-	-	-
Hexavalent Chromium	-	-	-	-
Total Cyanide	-	-	-	-
Free Cyanide	-	-	-	-
Manganese	0.013	0.017	0.016	-
Oil	-	0.4	0.2	-
Iron	0.51	0.51	0.51	-
Zinc	0.021	0.029	0.026	
Aluminum	-	-	-	-
Phenol	-	-	-	-
Phosphate	-	-	-	-
Lead	-	-	-	-
pH (units)	6.9	7.5	7.2	-

Average Flow = 50.4 l/sec. (800 gpm)

TABLE 44. ANALYTICAL DATA -SPB- PLANT C
COOLING TOWER BLOWDOWN

Constituents	Concentrations, mg/l (except as noted) Minimum	Maximum	Average	Net Average
Suspended Solids	40	50	45	44
Total Chromium	-	-	-	0
Hexavalent Chromium	-	-	-	0
Total Cyanide	1.37	3.81	2.21	2.21
Free Cyanide	-	-	-	-
Manganese	49	56	52	52
Oil	0.6	1.2	0.9	0.7
Iron	0.51	0.68	0.57	0.06
Zinc	3.32	3.40	3.35	3.32
Aluminum	-	-	-	-
Phenol	0.14	0.24	0.19	0.19
Phosphate	0.23	0.95	0.50	0.50
Lead	-	-	-	-
pH (units)	7.6	7.8	7.7	

Average Flow = 3.1 l/sec. (49 gpm)
Average Temperature = 36°C (96.8°F)

TABLE 45. ANALYTICAL DATA -SPC- PLANT C
SPRAY TOWER SUMP

Constituent	Concentrations, mg/l (except as noted) Minimum	Maximum	Average	Net Average
Suspended Solids	1,280	2,076	1,529	1,528
Total Chromium	0.04	0.04	0.04	0.04
Hexavalent Chromium	-	-	-	-
Total Cyanide	2.46	5.39	4.08	4.08
Free Cyanide	0.49	1.29	0.99	0.99
Manganese	271	608	447	447
Oil	2.0	4.4	3.5	3.3
Iron	3.02	7.91	5.12	4.61
Zinc	18.9	21.4	20.6	20.6
Aluminum	38	38	38	38
Phenol	0.70	0.98	0.79	0.79
Phosphate	4.54	5.23	4.77	4.77
Lead	1.17	4.00	3.00	3.00
pH (units)	7.6	8.5	8.1	

Average Flow = 69.3 l/sec. (1,100 gpm)
Average Temperature = 48°C (118.4°F)

TABLE 46. ANALYTICAL DATA -SPD- PLANT C
THICKENER UNDERFLOW

Constituents	Concentrations, mg/l (except as noted) Minimum	Maximum	Average	Net Average
Suspended Solids	8,158	39,012	24,397	24,396
Total Chromium	-	-	-	-
Hexavalent Chromium	-	-	-	-
Total Cyanide	1.99	4.90	3.33	3.33
Free Cyanide	0.54	0.89	0.68	0.68
Manganese	-	-	-	-
Oil	-	-	-	-
Iron	-	-	-	-
Zinc	-	-	-	-
Aluminum	-	-	-	-
Phenol	-	-	-	-
Phosphate	-	-	-	-
Lead	-	-	-	-
pH (units)	8.4	8.9	8.6	

Average Flow = 1.6 l/sec. (25 gpm)
Average Temperature = 45°C (113°F)

TABLE 47. ANALYTICAL DATA -SPL- PLANT C
SEWAGE PLANT EFFLUENT

Constituent	Concentrations, mg/l (except as noted) Minimum	Maximum	Average	Net Average
Suspended Solids	2	8	6	5
Total Chromium	-	-	-	0
Hexavalent Chromium	-	-	-	0
Total Cyanide	-	-	-	0
Free Cyanide	-	-	-	0
Manganese	3.5	6.3	5.0	5.0
Oil	1.0	1.6	1.3	1.1
Iron	0.42	0.47	0.44	0
Zinc	0.181	0.181	0.181	0.155
Aluminum	-	-	-	0
Phenol	0.04	0.29	0.17	0.17
Phosphate	-	-	-	-
Lead	-	-	-	0
pH (units)	5.2	7.0	6.1	

Average Flow = 0.06 l/sec. (1 gpm)
Average Temperature = 19.3°C (66.7°F)

TABLE 48. ANALYTICAL DATA -SPF- PLANT C
SLUDGE LAGOON EFFLUENT

Constituents	Concentrations, mg/l (except as noted) Minimum	Maximum	Average	Net Average
Suspended Solids	106	312	188	187
Total Chromium	-	-	-	0
Hexavalent Chromium	-	-	-	0
Total Cyanide	1.85	2.41	2.15	2.15
Free Cyanide	0.32	1.08	0.77	0.77
Manganese	65	97	75.5	75.5
Oil	1.4	2.4	1.9	1.7
Iron	1.11	1.64	1.30	0.79
Zinc	1.93	3.11	2.51	2.48
Aluminum	9.4	11.1	10.0	10.0
Phenol	0.15	0.36	0.23	0.23
Phosphate	1.52	2.23	1.82	1.82
Lead	-	0.77	0.50	0.50
pH (units)	7.3	7.7	7.5	

Average Flow = 6.22 l/sec. (98.6 gpm)

TABLE 49. ANALYTICAL DATA -SPG- PLANT C
THICKENER OVERFLOW

Constituent	Concentrations, mg/l (except as noted) Minimum	Maximum	Average	Net Average
Suspended Solids	100	252	181	180
Total Chromium	-	-	-	0
Hexavalent Chromium	-	-	-	0
Total Cyanide	5.01	6.43	5.60	5.60
Free Cyanide	0.73	1.12	0.90	0.90
Manganese	51	82	71	71
Oil	2.8	4.0	3.4	3.2
Iron	0.27	0.43	0.38	0
Zinc	1.06	2.80	1.73	1.70
Aluminum	4.1	9.4	6.2	6.2
Phenol	0.47	0.86	0.64	0.64
Phosphate	1.02	4.0	2.05	2.05
Lead	-	0.80	0.49	0.49
pH (units)	7.2	7.7	7.5	

Average Flow = 67.7 l/sec. (1,075 gpm)

PLANT D

This plant has open submerged-arc furnaces which produce ferrochromium, ferrosilicon, blocking chrome, and ferromanganese. Three of the furnaces are rated at 5.5 mw and the fourth at 16.5 mw.

These furnaces are equipped with a new type of dust-removal system utilizing waste heat from the furnace to provide the energy for gas scrubbing without the use of exhaust fans. This system has recently been installed on four ferroalloy furnaces. The reaction gas passed through a heat exchanger, a nozzle, and a separator. The heat from the reaction gases is transferred to the water in the heat exchanger, increasing the temperature of the water to about 177-204°C (350-400°F) and the water pressure to about 21 kg/sq cm (300 psi). As the heated water is expanded through the nozzle of the scrubber, partial flashing occurs, and the remaining liquid is atomized. Thus, a two-phase mixture of steam and small droplets leaves the nozzle at high velocity. The reaction gas from the furnace is entrained by this high velocity, two-phase mixture, and in the subsequent mixing, the reaction gas is scrubbed and cleaned. At the same time, the action of the gases leaving the nozzle aspirates the reaction gases from the furnace and propels them through the system. The mixture of steam, gas, and water droplets entrained with the collected particulates from the gas passes through a separator after discharge from the mixing section. The water and dust are removed from the gas-steam mixture; the gas leaves the separator through the stack, and the water and dust are discharged from the separator to a waste water treatment system. Chemicals and other treatment are applied to settle the solids and other contaminants from the water, and the fluid slurry is discharged to settling ponds. This system is illustrated in Figure 10. The water is then filtered, softened, and returned to a pump for recycling to the heat exchanger. Makeup water is added to replace any losses.

The water flow diagram is shown in Figure 11. The clarifiers consist of 3 inclined, tube-type clarifier-flocculators in parallel. The filters are 3 deep-bed sand filters in parallel; backwash on the filters is controlled by a continuously reading turbidimeter. The softener is a fluidized moving-bed ion exchange unit, rated at 38 l/sec. (600 gpm). The particular softener design is claimed to minimize resin attrition to less than 1 percent per year and to minimize rinsewater requirements.

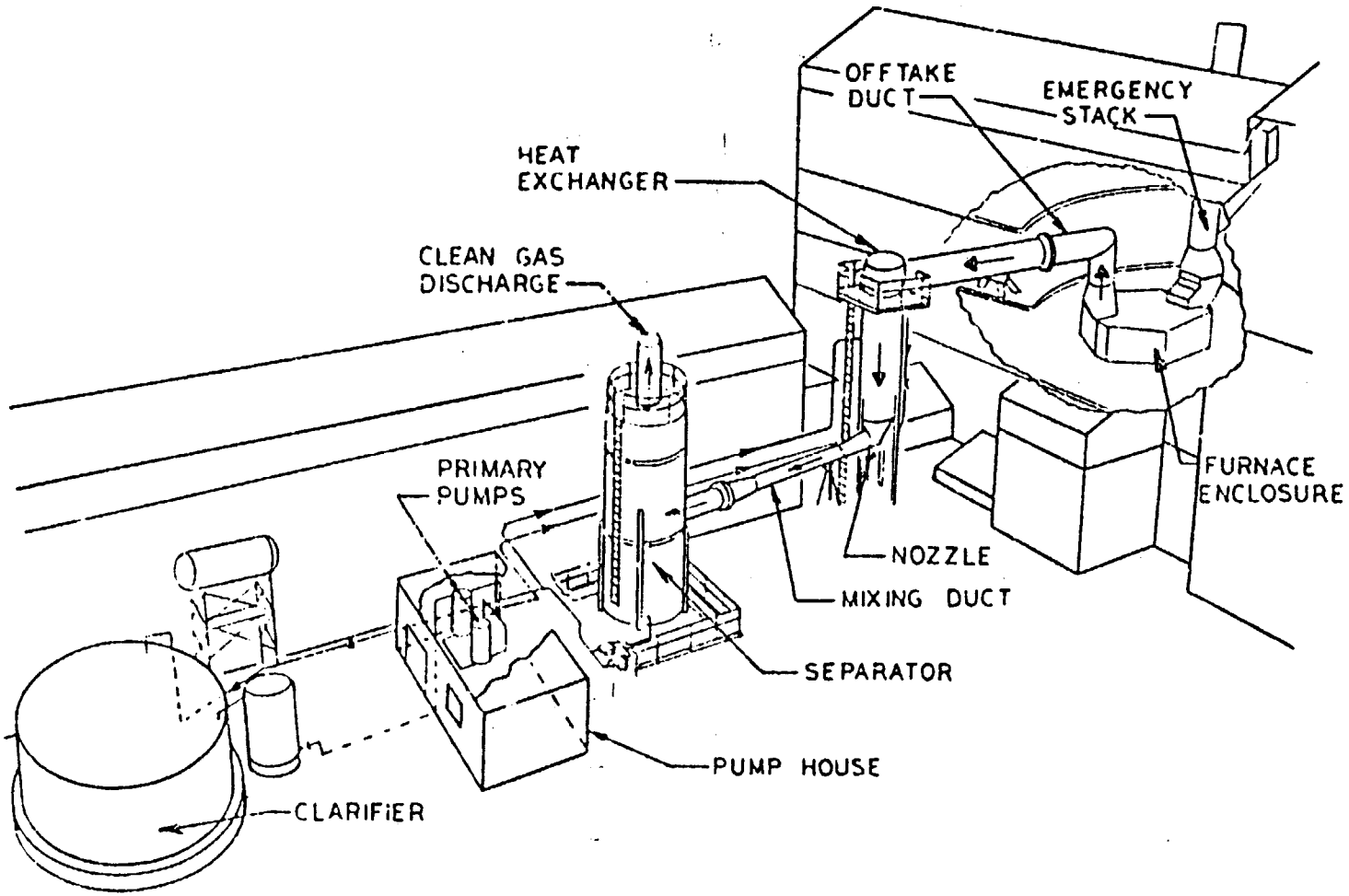

Figure 10. Steam, Hot Water Scrubbing System.

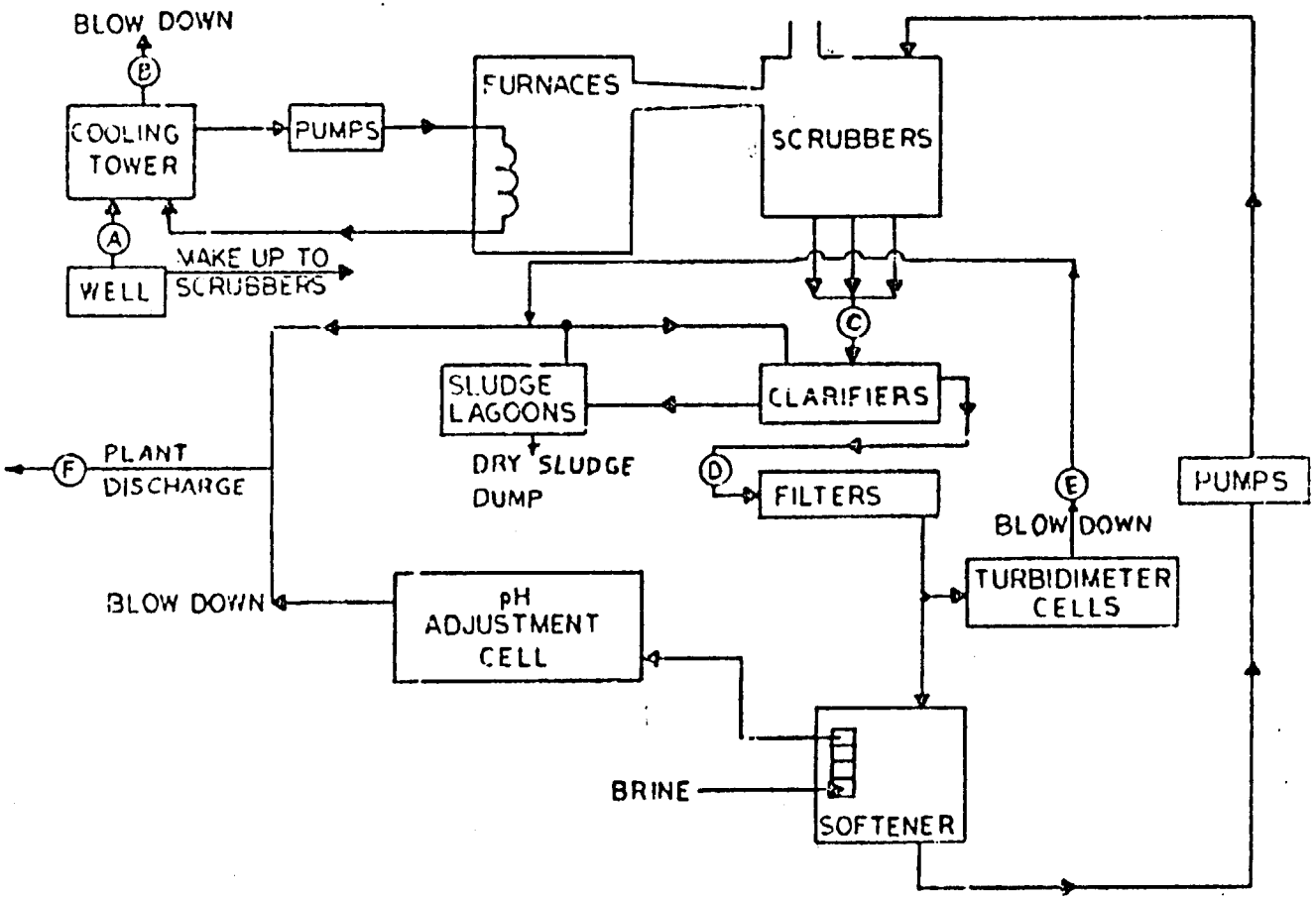

Figure 11. Plant D Water and Wastewater Systems.

The recirculation rate at the cooling tower is 284 l/sec. (4500 gpm), and the blowdown rate is 1.3 percent, or 3.7 l/sec. (58.5 gpm). The temperature change across the tower is 7.2°C (13°F).

During the sampling period, 2 of the small furnaces were operating as was the largest furnace. The products produced were blocking chromium, ferrochromium, and 50 percent ferrosilicon. The average daily power consumption on the furnaces totaled 695.5 mwhr.

Summarized analytical data for various sampling points as designated in Figure 11 are shown in Tables 50 through 55.

TABLE 50. ANALYTICAL DATA -SPA- PLANT D
WELL WATER

Constituents	Concentrations, mg/l (except as noted)			
	Minimum	Maximum	Average	Net Average
Suspended Solids	10	16	13	-
Total Chromium	-	-	-	-
Hexavalent Chromium	-	-	-	-
Total Cyanide	-	-	-	-
Free Cyanide	-	-	-	-
Manganese	0.20	0.20	0.20	-
Oil	-	-	-	-
Iron	2.24	2.30	2.27	-
Zinc	0.026	0.026	0.026	-
Aluminum	-	-	-	-
Phenol	-	-	-	-
Phosphate	0.02	0.04	0.03	-
Lead	-	-	-	-
pH (units)	6.1	7.9	6.7	-

Average Flow = 16.3 l/sec. (259 gpm)

TABLE 51. ANALYTICAL DATA -SPB- PLANT D
COOLING TOWER BLOWDOWN

Constituent	Concentrations, mg/l (except as noted) Minimum	Maximum	Average	Net Average
Suspended Solids	10	28	19	6
Total Chromium	-	-	-	0
Hexavalent Chromium	-	-	-	0
Total Cyanide	0.007	0.007	0.007	0.007
Free Cyanide	-	-	-	-
Manganese	0.09	0.14	0.11	0
Oil	0.2	0.2	0.2	0.2
Iron	3.08	3.15	3.10	0.83
Zinc	0.059	0.077	0.069	0.043
Aluminum	0.7	0.7	0.7	0.7
Phenol	-	-	-	-
Phosphate	1.95	2.77	2.54	2.51
Lead	-	-	-	0
pH (units)	6.2	7.8	6.8	

Average Flow = 0.38 l/sec. (6 gpm)

TABLE 52. ANALYTICAL DATA -SPC- PLANT D
SLURRY BLEND TANK

Constituents	Concentrations, mg/l (except as noted) Minimum	Maximum	Average	Net Average
Suspended Solids	768	7,644	3,070	3,057
Total Chromium	0.10	3.37	1.24	1.24
Hexavalent Chromium	0.06	1.85	0.68	0.68
Total Cyanide	-	0.062	0.031	0.031
Free Cyanide	-	0.020	0.018	0.018
Manganese	0.60	4.06	1.89	1.69
Oil	-	1.3	0.70	0.70
Iron	2.47	60.	27.9	25.6
Zinc	11.2	34.	25.1	25.1
Aluminum	10.8	103.	58.6	58.6
Phenol	0.03	0.48	0.24	0.24
Phosphate	0.45	6.95	3.95	3.92
Lead	0.68	4.4	3.03	3.03
pH (units)	8.7	9.3	9.0	

Average Flow = 21.6 l/sec. (343.5 gpm)

Table 53. ANALYTICAL DATA -SPL- PLANT D
CONTINUOUS BLOWDOWN

Constituent	Concentrations, mg/l (except as noted) Minimum	Maximum	Average	Net Average
Suspended Solids	8	102	38	25
Total Chromium	-	2.24	0.46	0.46
Hexavalent Chromium	-	-	-	-
Total Cyanide	-	0.014	0.005	0.005
Free Cyanide	-	-	-	-
Manganese	0.05	0.60	0.25	0.05
Oil	0.2	1.6	1.0	1.0
Iron	0.39	0.77	0.57	0
Zinc	0.173	0.325	0.175	0.149
Aluminum	-	0.6	0.2	0.2
Phenol	0.02	0.30	0.12	0.12
Phosphate	0.04	0.10	0.06	0.03
Lead	-	-	-	0
pH (units)	7.1	11.1	9.6	

Average Flow = 6.3 l/sec. (100 gpm)

TABLE 54. ANALYTICAL DATA -SPD- PLANT D
FILTER SUPPLY TANK

Constituents	Concentrations, mg/l (except as noted) Minimum	Maximum	Average	Net Average
Suspended Solids	68	134	112	99
Total Chromium	0.25	0.43	0.31	0.31
Hexavalent Chromium	-	-	-	-
Total Cyanide	0.020	0.029	0.024	0.024
Free Cyanide	-	-	-	-
Manganese	0.42	1.23	0.78	0.58
Oil	0.3	1.6	1.1	1.1
Iron	1.53	6.15	3.15	0.88
Zinc	0.288	2.51	1.24	1.21
Aluminum	0.7	1.8	1.3	1.3
Phenol	-	0.23	0.12	0.12
Phosphate	0.01	0.18	0.07	0.04
Lead	-	0.42	0.14	0.14
pH (units)	9.1	10.3	9.7	

Average Flow = 19.2 l/sec. (305 gpm)

TABLE 55. ANALYTICAL DATA -SPF- PLANT D
PLANT DISCHARGE

Constituent	Concentrations, mg/l (except as noted) Minimum	Maximum	Average	Net Average
Suspended Solids	60	532	186	173
Total Chromium	0.54	1.35	0.87	0.87
Hexavalent Chromium	0.138	0.215	0.177	0.177
Total Cyanide	0.014	0.030	0.025	0.025
Free Cyanide	-	-	-	-
Manganese	0.81	3.25	1.81	1.61
Oil	0.4	0.61	0.54	0.54
Iron	1.06	7.83	3.79	1.52
Zinc	0.592	3.79	2.03	2.00
Aluminum	-	-	-	0
Phenol	-	0.05	0.02	0.02
Phosphate	-	0.10	0.06	0.03
Lead	-	0.63	0.21	0.21
pH (units)	8.4	9.6	8.9	

Average Flow = 9.8 l/sec. (155 gpm)

PLANT E

This plant has been operating since 1951 and has principally two areas where wastewater other than cooling waters are generated and discharged. These two areas contain electric arc furnaces and electrolytic cells, respectively.

There are seven covered and two open submerged-arc furnaces where 50 percent ferrosilicon, silicomanganese, standard and medium carbon ferromanganese, and high carbon ferrochromium are produced. This area also contains metals refining and slag shotting operations. These furnaces have a total rating of 126 mw and operated during the survey period at 82 mw.

The nine furnaces use cooling water on a once-through basis. The sanitary sewage is treated at an on-site plant and discharges with the cooling water. The total plant effluent is 1.16×10^6 cu. m/day (305.5 mgd), the majority of which is cooling water from the plant's power generating station.

The water and wastewater systems for the plant are shown in Figure 12. Also shown in this figure are the sampling points used during the survey.

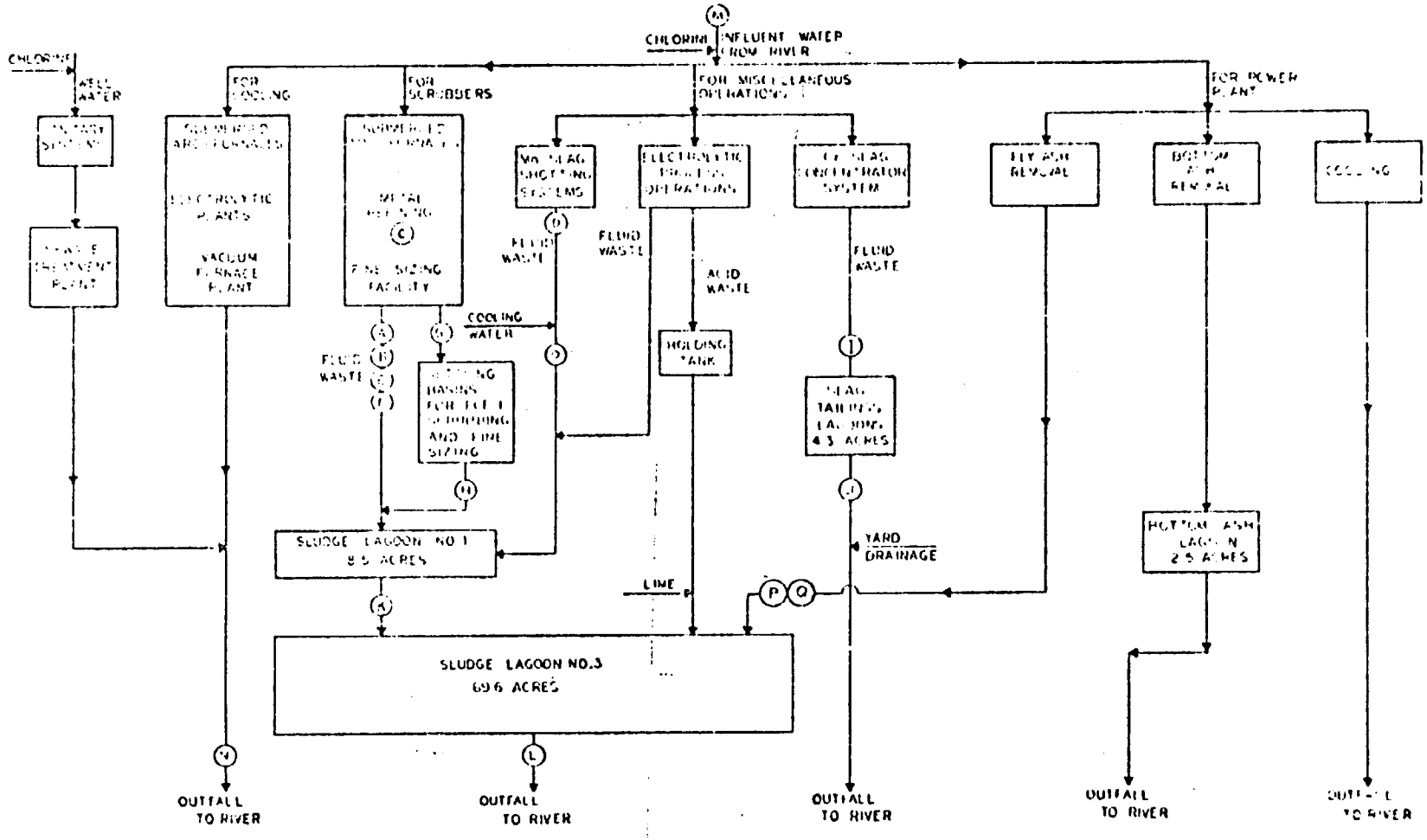

Figure 12. Plant E Water and Wastewater Systems.

The fumes from the furnaces are scrubbed with either venturi or disintegrator type scrubbers. There are five venturi and 12 disintegrator type scrubbers available for the nine furnaces. The scrubbers use between 22-32 l/sec. (350-500 gpm) of the water when operating. The metals refining operation also utilizes a venturi scrubber. The scrubber water flows via a common line to the first of two lagoons operated in series. The lagoons have a combined surface area of 78 acres. The wash water from the electrolytic operations mixes with the scrubber wastewater before entering the lagoons.

The acid wastewater from the electrolytic operations flows to the second of these lagoons where a hydrated lime slurry is also added as a neutralizing agent. This second lagoon also receives the effluent from the flyash removal system at the power plant. The effluent from the second lagoon flows to the receiving stream.

A wastewater discharge from the slag concentrator flows to a separate 4.3 acre tailings lagoon and then to the receiving stream.

Summarized analytical data for sampling points as designated in Figure 12 are shown in Tables 56 through 72. The 1971 average temperature increase in cooling water temperatures over inlet was 3.9°C (7°F).

TABLE 56. ANALYTICAL DATA -SPA- PLANT E
FURNACE A SCRUBBER DISCHARGE

Constituent	Concentrations, mg/l (except as noted)			
	Minimum	Maximum	Average	Net Average
Suspended Solids	210	342	261	228
Total Chromium	0.01	0.01	0.01	0
Hexavalent Chromium	-	-	-	0
Total Cyanide	-	-	-	0
Free Cyanide	-	-	-	0
Manganese	54	54	54	54
Oil	1.2	1.2	1.2	1.2
Iron	5.26	5.26	5.26	4.68
Zinc	18	18	18	18
Aluminum	4.45	4.45	4.45	3.78
Phenol	-	-	-	0
Phosphate	-	-	-	0
Lead	1.79	1.79	1.79	1.79
pH (units)	7.0	7.1	7.0	

Average Flow = 28.4 l/sec. (450 gpm)

TABLE 57. ANALYTICAL DATA -SPL- PLANT E
FURNACE B SCRUBBER DISCHARGE

Constituents	Concentrations, mg/l (except as noted) Minimum	Maximum	Average	Net Average
Suspended Solids	381	426	373	340
Total Chromium	0.09	0.09	0.09	0.09
Hexavalent Chromium	-	-	-	-
Total Cyanide	0.87	0.87	0.37	0.87
Free Cyanide	-	-	-	-
Manganese	256	256	256	256
Oil	1.6	1.6	1.6	1.6
Iron	18.0	18.0	18.0	17.4
Zinc	48	48	48	48
Aluminum	13.0	13.0	13.0	12.3
Phenol	0.22	0.22	0.22	0.22
Phosphate	-	-	-	0
Lead	5.6	5.6	5.6	5.6
pH (units)	6.4	6.9	6.7	

Average Flow = 25.2 l/sec. (400 gpm)

TABLE 58. ANALYTICAL DATA -SPC- PLANT E
METALS REFINING SCRUBBER DISCHARGE

Constituent	Concentrations, mg/l (except as noted) Minimum	Maximum	Average	Net Average
Suspended Solids	874	1,674	1,204	1,171
Total Chromium	0.06	0.06	0.06	0
Hexavalent Chromium	-	-	-	-
Total Cyanide	-	-	-	0
Free Cyanide	-	-	-	0
Manganese	597	597	597	597
Oil	1.2	1.2	1.2	1.2
Iron	1.82	1.82	1.82	1.24
Zinc	0.46	0.46	0.46	0.44
Aluminum	0.87	0.87	0.87	0.20
Phenol	-	-	-	0
Phosphate	-	-	-	0
Lead	-	-	-	0
pH (units)	7.8	8.7	8.2	

Average Flow = 22.1l/sec. (350 gpm)

TABLE 59. ANALYTICAL DATA -SPD- PLANT E
SLAG SHOTTING WASTEWATER

Constituents	Concentrations, mg/l (except as noted) Minimum	Maximum	Average	Net Average
Suspended Solids	132	302	217	184
Total Chromium	0.03	0.03	0.03	0
Hexavalent Chromium	-	-	-	-
Total Cyanide	-	-	-	0
Free Cyanide	-	-	-	0
Manganese	54	54	54	54
Oil	1.2	1.2	1.2	1.2
Iron	0.28	0.28	0.28	0
Zinc	0.13	0.13	0.13	0.11
Aluminum	10.5	10.5	10.5	9.8
Phenol	-	-	-	0
Phosphate	-	-	-	0
Lead	-	-	-	0
pH (units)	7.3	7.4	7.5	

Average Flow = 110.3 l/sec. (1,750 gpm)
(about 20 run/hr)

TABLE 60. ANALYTICAL DATA -SPL- PLANT E
FURNACE C SCRUBBER DISCHARGE

Constituent	Concentrations, mg/l (except as noted) Minimum	Maximum	Average	Net Average
Suspended Solids	264	364	317	284
Total Chromium	0.57	0.57	0.57	0.41
Hexavalent Chromium	-	-	-	-
Total Cyanide	0.16	0.16	0.16	0.16
Free Cyanide	-	-	-	-
Manganese	21.9	21.9	21.9	21.4
Oil	1.8	1.8	1.8	1.8
Iron	3.19	3.19	3.19	2.61
Zinc	8.7	8.7	8.7	8.7
Aluminum	7.1	7.1	7.1	6.4
Phenol	0.09	0.09	0.09	0.09
Phosphate	0.32	0.32	0.32	0.32
Lead	0.26	0.26	0.26	0.26
pH (units)	7.3	7.3	7.3	

Average Flow = 50.4 l/sec. (800 gpm)

TABLE 61. ANALYTICAL DATA -SPF- PLANT E
FURNACE D SCRUBBER DISCHARGE

Constituents	Concentrations, mg/l (except as noted) Minimum	Maximum	Average	Net Average
Suspended Solids	268	414	343	310
Total Chromium	0.10	0.10	0.10	0
Hexavalent Chromium	-	-	-	-
Total Cyanide	0.96	0.96	0.96	0.96
Free Cyanide	-	-	-	-
Manganese	4.22	4.22	4.22	3.73
Oil	1.6	1.6	1.6	1.6
Iron	4.00	4.00	4.00	3.42
Zinc	3.00	3.00	3.00	2.98
Aluminum	1.68	1.68	1.68	1.01
Phenol	0.15	0.15	0.15	0.15
Phosphate	0.50	0.50	0.50	0.50
Lead	1.03	1.03	1.03	1.03
pH (units)	4.4	4.4	4.4	

Average Flow = 50.4 l/sec. (800 gpm)

TABLE 62. ANALYTICAL DATA -SPG- PLANT E
FURNACE E SCRUBBER DISCHARGE

Constituent	Concentrations, mg/l (except as noted) Minimum	Maximum	Average	Net Average
Suspended Solids	3,244	4,140	3,753	3,720
Total Chromium	0.50	0.50	0.50	0.34
Hexavalent Chromium	-	-	-	-
Total Cyanide	-	-	-	0
Free Cyanide	-	-	-	0
Manganese	1,576	1,576	1,576	1,576
Oil	-	-	-	-
Iron	6.94	6.94	6.94	6.36
Zinc	51	51	51	51
Aluminum	178	178	178	177
Phenol	0.09	0.09	0.09	0.09
Phosphate	-	-	-	0
Lead	11.7	11.7	11.7	11.7
pH (units)	8.6	8.7	8.6	

Average Flow = 44.1 l/sec. (700 gpm)

TABLE 63. ANALYTICAL DATA -SPH- PLANT E
FURNACE E SCRUBBER SETTLING BASIN DISCHARGE

Constituents	Concentrations, mg/l (except as noted) Minimum	Maximum	Average	Net Average
Suspended Solids	3,348	11,364	6,080	6,047
Total Chromium	0.17	0.17	0.17	0.01
Hexavalent Chromium	-	-	-	-
Total Cyanide	-	-	-	0
Free Cyanide	-	-	-	0
Manganese	1,322	1,322	1,322	1,322
Oil	1.0	1.0	1.0	1.0
Iron	7.4	7.16	7.16	6.58
Zinc	89	89	89	89
Aluminum	170	176	176	177
Phenol	-	-	-	0
Phosphate	-	-	-	0
Lead	9.1	9.1	9.1	9.1
pH (units)	8.5	8.6	8.6	

Average Flow = 44.1 l/sec. (700 gpm)

TABLE 64. ANALYTICAL DATA -SPI- PLANT E
SLAG CONCENTRATOR WASTEWATER

Constituent	Concentrations, mg/l (except as noted) Minimum	Maximum	Average	Net Average
Suspended Solids	856	872	864	831
Total Chromium	2.04	2.01	2.04	1.88
Hexavalent Chromium	-	-	-	0
Total Cyanide	-	0.013	0.007	0.007
Free Cyanide	-	-	-	-
Manganese	4.39	4.81	4.60	4.11
Oil	0.2	2.2	1.2	1.2
Iron	5.8	14.6	10.2	9.6
Zinc	0.22	0.22	0.22	0.20
Aluminum	10.7	10.7	10.7	10.0
Phenol	-	-	-	0
Phosphate	-	-	-	0
Lead	-	-	-	0
pH (units)	6.1	6.2	6.2	

Average Flow = 107.11/sec. (1,700 gpm)

TABLE 65. ANALYTICAL DATA -SPJ- PLANT E
SLAG TAILINGS POND DISCHARGE

Constituents	Concentrations, mg/l (except as noted) Minimum	Maximum	Average	Net Average
Suspended Solids	46	90	62	29
Total Chromium	0.02	0.16	0.09	0
Hexavalent Chromium	-	-	-	0
Total Cyanide	0.006	0.006	0.006	0.006
Free Cyanide	-	-	-	-
Manganese	0.95	1.26	1.08	0.59
Oil	-	-	-	0
Iron	1.14	1.54	1.32	0.74
Zinc	0.032	0.058	0.048	0.026
Aluminum	0.72	1.13	0.86	0.19
Phenol	0.25	0.25	0.25	0.25
Phosphate	-	-	-	0
Lead	-	-	-	0
pH (units)	6.2	6.9	6.4	

Average Flow = 107.1 l/sec. (1,700 gpm)

TABLE 66. ANALYTICAL DATA -SPK- PLANT E
LAGOON #3 INFLUENT

Constituent	Concentrations, mg/l (except as noted) Minimum	Maximum	Average	Net Average
Suspended Solids	32	972	183	150
Total Chromium	0.55	1.2	0.77	0.61
Hexavalent Chromium	0.190	0.205	0.198	0.198
Total Cyanide	-	-	-	0
Free Cyanide	-	-	-	0
Manganese	24.4	26.1	25.4	24.9
Oil	0.4	0.4	0.4	0.4
Iron	0.86	1.49	1.28	0.70
Zinc	4.22	7.90	5.55	5.53
Aluminum	1.44	2.60	2.04	1.37
Phenol	-	-	-	0
Phosphate	-	-	-	0
Lead	-	0.06	0.04	0.04
pH (units)	6.7	7.0	6.8	

Average Flow = 447.3 l/sec. (7,100 gpm)

TABLE 67. ANALYTICAL DATA -SPL- PLANT E
LAGOON #3 EFFLUENT

Constituents	Concentrations, mg/l (except as noted) Minimum	Maximum	Average	Net Average
Suspended Solids	2	30	15	0
Total Chromium	0.08	0.08	0.08	0
Hexavalent Chromium	-	-	-	-
Total Cyanide	-	0.008	0.005	0.005
Free Cyanide	-	-	-	0
Manganese	86	93	91	91
Oil	-	0.4	0.2	0.2
Iron	0.27	0.43	0.35	0
Zinc	0.22	0.46	0.34	0
Aluminum	0.11	0.21	0.15	0
Phenol	-	-	-	0
Phosphate	-	2.73	0.9	0.9
Lead	-	-	-	0
pH (units)	7.0	7.2	7.2	

Average Flow = 632.8 l/sec. (10,045 gpm)

TABLE 68. ANALYTICAL DATA -SPH- PLANT E
INTAKE RIVER WATER

Constituent	Concentrations, mg/l (except as noted) Minimum	Maximum	Average	Net Average
Suspended Solids	24	38	33	-
Total Chromium	0.16	0.16	0.16	-
Hexavalent Chromium	-	-	-	-
Total Cyanide	-	-	-	-
Free Cyanide	-	-	-	-
Manganese	0.49	0.49	0.49	-
Oil	-	0.2	-	-
Iron	0.54	0.62	0.58	-
Zinc	0.022	0.022	0.022	-
Aluminum	0.67	0.67	0.67	-
Phenol	-	-	-	-
Phosphate	-	-	-	-
Lead	-	-	-	-
pH (units)	7.2	7.2	7.2	

Average Flow = 13,366 l/sec. (212,150 gpm)

TABLE 69. ANALYTICAL DATA -SPN- PLANT E
COOLING WATER DISCHARGE

Constituent	Concentrations, mg/l (except as noted) Minimum	Maximum	Average	Net Average
Suspended Solids	90	176	125	92
Total Chromium	6.6	6.6	6.6	6.4
Hexavalent Chromium	-	-	-	0
Total Cyanide	-	0.014	0.005	0.005
Free Cyanide	-	-	-	-
Manganese	0.053	4.61	1.58	1.09
Oil	-	0.4	0.3	0.3
Iron	3.42	32.	15.0	14.4
Zinc	0.045	0.045	0.045	0.023
Aluminum	4.28	4.28	4.28	3.51
Phenol	-	-	-	0
Phosphate	1.98	1.98	1.98	1.98
Lead	-	-	-	0
pH (units)	3.8	7.2	5.4	

Average Flow = 3,571 l/sec. (56,680 gpm)

TABLE 70. ANALYTICAL DATA -SPO- PLANT E
COMBINED SLAG SHOTTING & COOLING WATER DISCHARGE

Constituent	Concentrations, mg/l (except as noted) Minimum	Maximum	Average	Net Average
Suspended Solids	148	192	170	137
Total Chromium	0.02	0.02	0.02	0.02
Hexavalent Chromium	-	-	-	-
Total Cyanide	-	-	-	0
Free Cyanide	-	-	-	0
Manganese	19.1	19.1	19.1	18.6
Oil	1.0	1.0	1.0	1.0
Iron	3.72	3.72	3.72	3.14
Zinc	0.049	0.049	0.049	0.027
Aluminum	4.95	4.95	4.95	4.28
Phenol	-	-	-	0
Phosphate	-	-	-	0
Lead	-	-	-	0
pH (units)	7.5	7.5	7.5	

Average Flow = 50.4 l/sec. (800 gpm)

TABLE 71. ANALYTICAL DATA -SPP- PLANT E
FLY ASH INFLUENT TO LAGOON

Constituents	Concentrations, mg/l (except as noted) Minimum	Maximum	Average	Net Average
Suspended Solids	1,246	20,156	7,667	7,634
Total Chromium	-	-	-	-
Hexavalent Chromium	-	-	-	-
Total Cyanide	-	-	-	-
Free Cyanide	-	-	-	-
Manganese	-	-	-	-
Oil	-	-	-	-
Iron	-	-	-	-
Zinc	-	-	-	-
Aluminum	-	-	-	-
Phenol	-	-	-	-
Phosphate	-	-	-	-
Lead	-	-	-	-
pH (units)		6.6	7.0	6.7

Average Flow = 70.9 l/sec. (1,125 gpm)

TABLE 72. ANALYTICAL DATA -SPQ- PLANT E
FLY ASH INFLUENT TO LAGOON

Constituent	Concentrations, mg/l (except as noted) Minimum	Maximum	Average	Net Average
Suspended Solids	510	5,200	2,209	2,176
Total Chromium	-	-	-	-
Hexavalent Chromium	-	-	-	-
Total Cyanide	-	-	-	-
Free Cyanide	-	-	-	-
Manganese	-	-	-	-
Oil	-	-	-	-
Iron	-	-	-	-
Zinc	-	-	-	-
Aluminum	-	-	-	-
Phenol	-	-	-	-
Phosphate	-	-	-	-
Lead	-	-	-	-
pH (units)	6.6	6.8	6.7	

Average Flow = 70.9 l/sec. (1,125 gpm)

PLANT F

This plant utilizes seven electric arc furnaces to produce a product line including 50 percent ferrosilicon, low carbon ferrochromesilicon, high carbon ferrochromium, low carbon ferrochromium and silicon metal. The furnaces range in size from 10 mw to 36 mw with a collective capacity of 142 mw. No wet air pollution devices are used; baghouses have been installed on some furnaces. The water use system is as shown in Figure 13.

All plant water is supplied from wells and the furnace cooling water is recirculated. Blowdown from all three cooling towers is automatically controlled by total solids levels. Blow rate in the cooling tower serving 4 furnaces with a capacity of 51 mw is 76 l/sec (1200 gpm). Bleed-off from this unit is 5 l/sec (80 gpm) or 6.6 percent of the recirculating flow. Another cooling tower serving a 20 mw furnace has a flow rate of 50 l/sec (800 gpm) and a bleed-off of 1 l/sec (20 gpm) or 2.5 percent of the recirculating flow. Two additional furnaces with a capacity of 65 mw are served by a 316 l/sec (500 gpm) recirculating flow and a bleed-off of 13 l/sec (200 gpm) or 4 percent of the flow. Water treatment in the cooling system consists of a chromate based proprietary compound and algaecides.

Except for the overflow from septic tanks and isolated roof drains, the cooling system bleed-off is the major source of the plant discharge. Yard drainage resulting from surface run-off is collected and transfered to a small off-site lagoon. Under normal conditions there is no discharge from the lagoon as accumulated waste water either evaporates or drains through the lagoon bottom.

With 6 furnaces operating during the sampling period at 92.8 mw, the cooling water use was thus 17.15 l/kwhr (4.53 gal/kwhr). A limited number of samples were collected at this plant and the analytical data are summarized in Tables 73 through 75. The temperature drop across the cooling tower is 5.6°C (10°F).

A slag concentration process is used at this plant which utilizes water on a completely closed recirculation system, the only discharge is blowdown to a closed lagoon i.e., a lagoon with no outlet. This process was not operating at the time of our visit. The plant reports the blowdown rate to be 1.58 l/sec (1500 gpm).

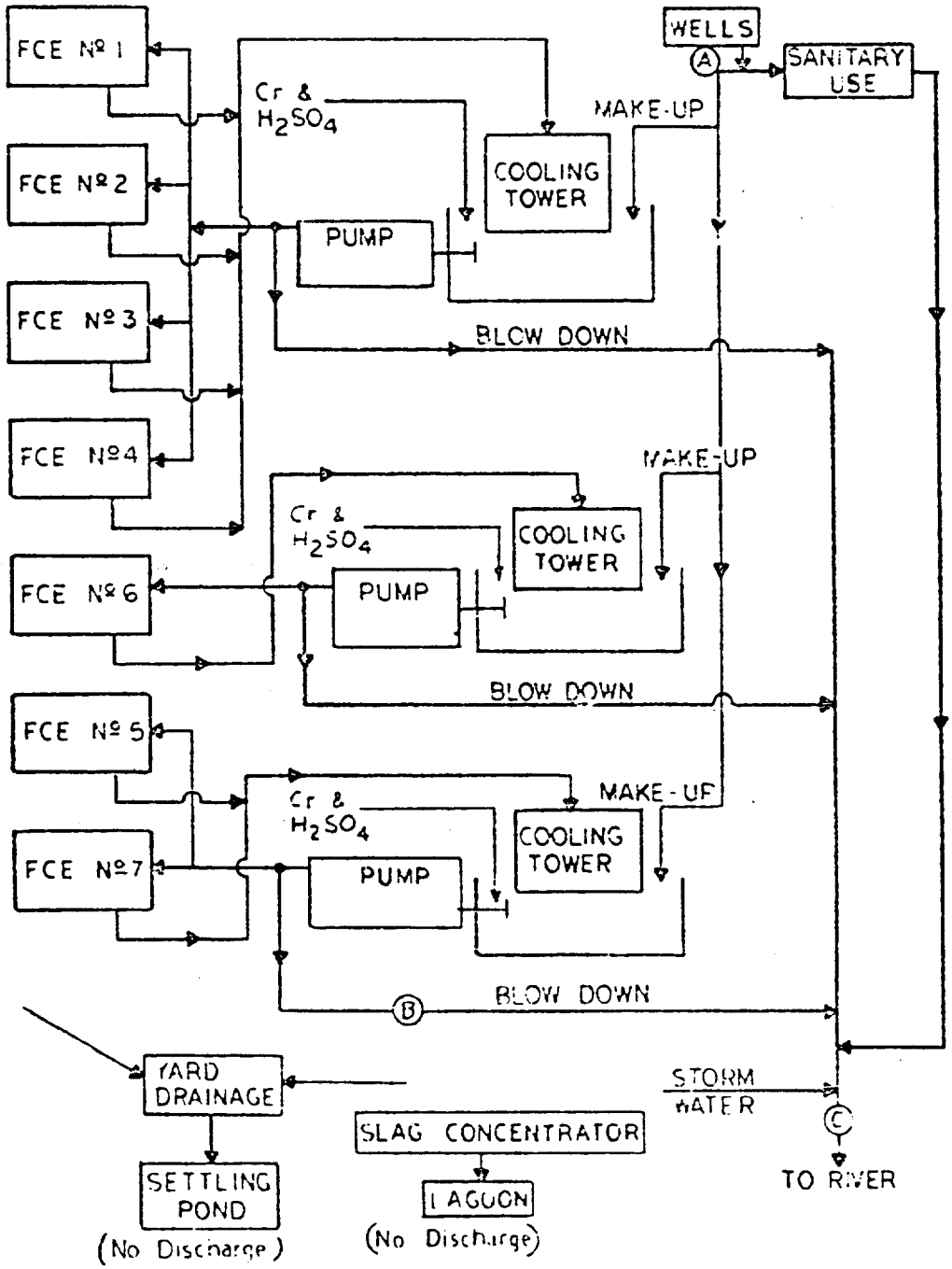

Figure 13. Plant F Water and Wastewater Systems.

TABLE 73. ANALYTICAL DATA -SPA- PLANT F
INTAKE WATER

Constituents	Concentrations, mg/l (except as noted) Minimum	Maximum	Average	Net Average
Suspended Solids	17	17	17	-
Total Chromium	0.01	0.01	0.01	-
Hexavalent Chromium	-	-	-	-
Total Cyanide	-	-	-	-
Free Cyanide	-	-	-	-
Manganese	0.026	0.026	0.026	-
Oil	1.0	1.0	1.0	-
Iron	-	-	-	-
Zinc	0.008	0.008	0.008	-
Aluminum	-	-	-	-
Phenol	-	-	-	-
Phosphate	-	-	-	-
Lead	-	-	-	-
pH (units)	7.3	7.3	7.3	

Average Flow = 25.2 l/sec. (400 gpm)

TABLE 74. ANALYTICAL DATA -SPB- PLANT F
COOLING TOWER BLOWDOWN

Constituent	Concentrations, mg/l (except as noted) Minimum	Maximum	Average	Net Average
Suspended Solids	14	14	14	0
Total Chromium	10.8	10.8	10.8	10.8
Hexavalent Chromium	0.015	0.015	0.015	-
Total Cyanide	-	-	-	0
Free Cyanide	-	-	-	0
Manganese	0.093	0.093	0.093	0.067
Oil	1.4	1.4	1.4	0.4
Iron	0.11	0.11	0.11	0.11
Zinc	6.98	6.98	6.98	6.97
Aluminum	-	-	-	0
Phenol	-	-	-	0
Phosphate	-	-	-	0
Lead	-	-	-	0
pH (units)	5.9	5.9	5.9	

Average Flow = 12.6 l/sec. (200 gpm)

TABLE 75. ANALYTICAL DATA -SPC- PLANT F
PLANT DISCHARGE

Constituent	Concentrations, mg/l (except as noted) Minimum	Maximum	Average	Net Average
Suspended Solids	14	14	14	0
Total Chromium	13.6	13.6	13.6	13.6
Hexavalent Chromium	0.008	0.008	0.008	-
Total Cyanide	0.010	0.010	0.010	0.010
Free Cyanide	-	-	-	-
Manganese	0.370	0.370	0.370	0.344
Oil	4.2	4.2	4.2	3.2
Iron	0.58	0.58	0.58	0.58
Zinc	6.98	6.98	6.98	6.97
Aluminum	0.67	0.67	0.67	0.67
Phenol	-	-	-	0
Phosphate	-	-	-	0
Lead	-	-	-	0
pH (units)	6.5	6.5	6.5	

Average Flow = 20.8 l/sec. (330 gpm)

PLANT G

This plant has two 35 mw open furnaces which produce ferrochromium and a slag concentration operation. At times ferrochromesilicon is produced here. The water flow diagram for the plant is shown in Figure 14. Air pollution control is by means of electrostatic precipitators which are preceded by spray towers. The gases from the furnaces are conditioned by the water sprays in the towers in order to improve the performance of the precipitators; ammonia is added to the spray water.

The water supply is purchased city water and originates from wells. The cooling water used on the furnaces is recirculated through a cooling tower at the rate of 316 l/sec. (500 gpm). The spray towers remove a portion of the particulates from the furnace gases prior to the precipitators; the resultant slurry passes through settling basins near the furnaces and then a lagoon which has been excavated from a slag pile.

The slag concentrator is a sink-float process in which slag fines are separated from larger, usable slag particles and in turn from recoverable metal. The products are thus slag for sale and metal for reuse; the waste is a slurry of slag fines. The waste stream is treated in 2 small lagoons in series prior to discharge to a stream.

Plant production has been reported at 245 kkgs (270 short tons) of alloy per day. Reference 32 indicates a factor of 4.2 mwhr per ton, i.e., a furnace load of 1,134 mwhr per day. Analytical data are summarized in Tables 76 through 81 for sampling locations designated in Figure 14.

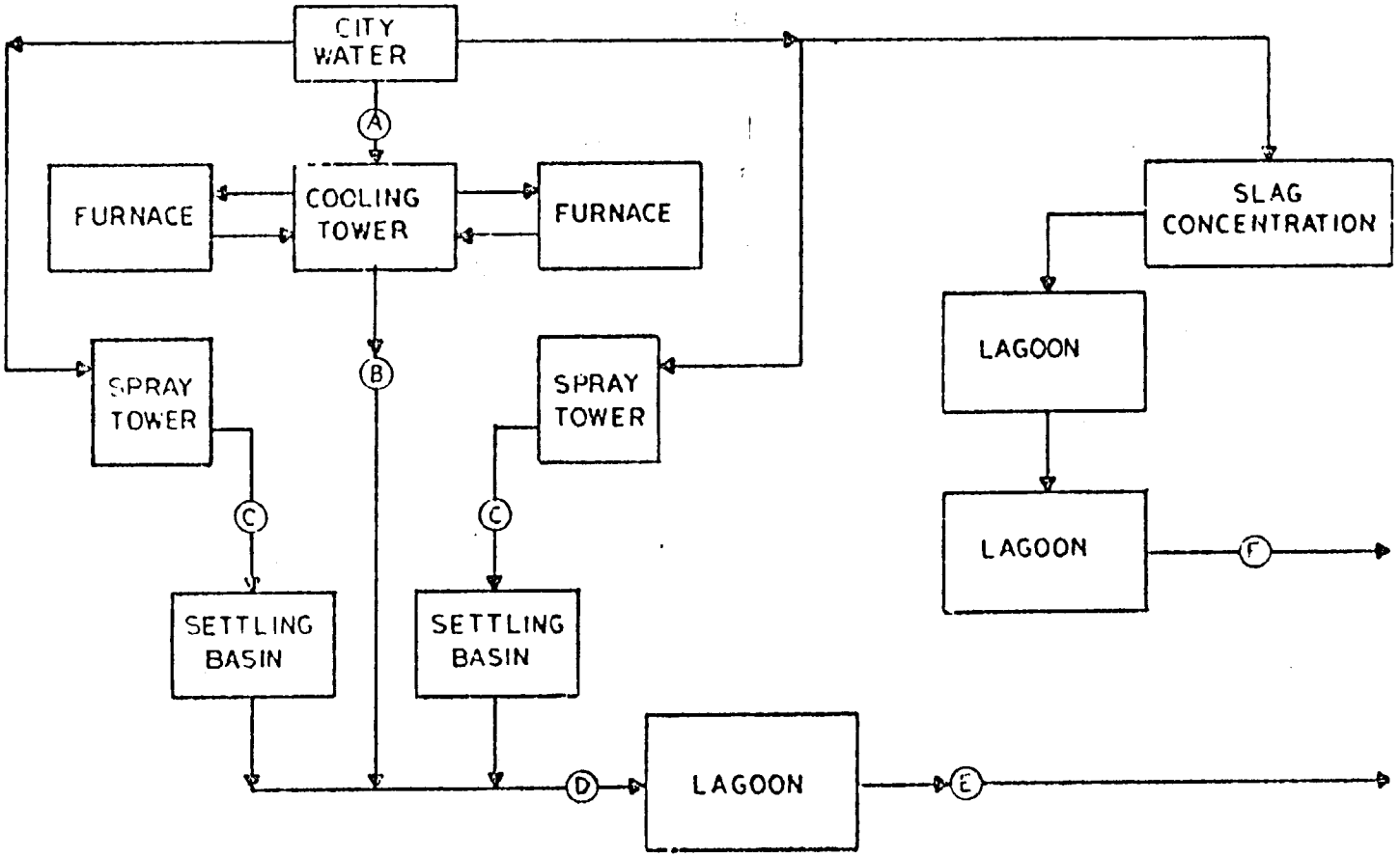

Figure 14. Plant G Water and Wastewater Systems.

TABLE 76. ANALYTICAL DATA -SPA- PLANT G
INTAKE CITY WATER

Constituent	Concentrations, mg/l (except as noted) Minimum	Maximum	Average	Net Average
Suspended Solids	-	-	-	-
Total Chromium	-	-	-	-
Hexavalent Chromium	-	-	-	-
Total Cyanide	-	-	-	-
Free Cyanide	-	-	-	-
Manganese	0.030	0.030	0.030	-
Oil	0.2	0.2	0.2	-
Iron	0.13	0.14	0.13	-
Zinc	0.159	0.159	0.159	-
Aluminum	-	-	-	-
Phenol	-	-	-	-
Phosphate	-	-	-	-
Lead	-	-	-	-
pH (units)	6.9	7.9	7.3	

Average Flow = 20.5 l/sec. (325 gpm)

TABLE 77. ANALYTICAL DATA -SPB- PLANT G
COOLING TOWER BLOWDOWN

Constituent	Concentrations, mg/l (except as noted) Minimum	Maximum	Average	Net Average
Suspended Solids	18	40	25	25
Total Chromium	3.23	3.35	3.31	3.31
Hexavalent Chromium	1.43	1.57	1.49	1.49
Total Cyanide	-	-	-	0
Free Cyanide	-	-	-	0
Manganese	0.094	0.094	0.094	0.064
Oil	0.2	0.4	0.3	0.1
Iron	0.19	0.46	0.32	0.19
Zinc	0.52	0.71	0.65	0.491
Aluminum	0.98	0.98	0.98	0.98
Phenol	-	-	-	0
Phosphate	0.05	0.15	0.12	0.12
Lead	-	-	-	0
pH (units)	7.3	8.4	8.0	

Average Flow = 1.6 l/sec. (25 gpm)

TABLE 78. ANALYTICAL DATA -SPC- PLANT G
SPRAY TOWER DISCHARGE

Constituent	Concentrations, mg/l (except as noted) Minimum	Maximum	Average	Net Average
Suspended Solids	4,134	6,104	4,980	4,873
Total Chromium	2.66	8.36	4.76	4.76
Hexavalent Chromium	-	0.49	0.32	0.32
Total Cyanide	-	-	-	0
Free Cyanide	-	-	-	0
Manganese	1.68	14.0	8.15	8.12
Oil	0.2	0.6	0.3	0.1
Iron	1.77	3.50	2.58	2.45
Zinc	0.75	5.28	2.45	2.29
Aluminum	4.34	23.0	11.28	11.28
Phenol	-	-	-	0
Phosphate	0.01	0.02	0.02	0.02
Lead	-	-	-	0
pH (units)	7.3	8.6	8.1	

Average Flow = 1.1 l/sec. (17.5 gpm)

TABLE 79. ANALYTICAL DATA -SPD- PLANT
SETTLING BASIN EFFLUENT

Constituents	Concentrations, mg/l (except as noted) Minimum	Maximum	Average	Net Average
Suspended Solids	204	1,898	784	784
Total Chromium	3.48	7.44	5.29	5.29
Hexavalent Chromium	-	-	-	0
Total Cyanide	-	-	-	0
Free Cyanide	-	-	-	0
Manganese	2.89	3.81	3.33	3.30
Oil			0.4	0.2
Iron	1.27	5.87	2.95	2.82
Zinc	2.67	6.83	4.75	4.59
Aluminum	7.8	29.0	21.9	21.9
Phenol	-	-	-	0
Phosphate			0.03	0.03
Lead	-	-	-	0
pH (units)	7.7	8.9	8.3	

Average Flow = 3.8 l/sec. (60 gpm)

TABLE 80. ANALYTICAL DATA -SPE- PLANT G
PLANT DISCHARGE

Constituent	Concentrations, mg/l (except as noted) Minimum	Maximum	Average	Net Average
Suspended Solids	96	104	101	101
Total Chromium	2.26	2.81	2.52	2.52
Hexavalent Chromium	-	-	-	0
Total Cyanide	-	-	-	0
Free Cyanide	-	-	-	0
Manganese	0.87	1.45	1.20	1.17
Oil	0.4	2.0	1.1	0.9
Iron	0.45	0.83	0.60	0.47
Zinc	0.35	1.15	0.84	0.68
Aluminum	1.60	3.49	2.57	2.57
Phenol	-	-	-	0
Phosphate	0.01	0.01	0.04	0.04
Lead	-	-	-	0
pH (units)	8.0	8.2	8.1	

Average Flow = 3.8 l/sec. (60 gpm)

TABLE 81. ANALYTICAL DATA -SPF- PLANT G
SLAG PROCESSING DISCHARGE

Constituents	Concentrations, mg/l (except as noted) Minimum	Maximum	Average	Net Average
Suspended Solids	26	2,894	1,250	1,250
Total Chromium	0.55	4.54	2.61	2.61
Hexavalent Chromium	0.16	0.45	0.30	0.30
Total Cyanide	-	-	-	0
Free Cyanide	-	-	-	0
Manganese	0.50	10.8	4.14	4.11
Oil	0.8	1.0	1.0	0.8
Iron	0.98	5.33	4.38	4.25
Zinc	0.088	3.36	1.65	1.49
Aluminum	0.27	37.0	14.1	14.1
Phenol	-	-	-	0
Phosphate	-	-	-	0
Lead	-	-	-	0
pH (units)	8.4	9.5	8.9	

Average Flow = 0.66 l/sec. (10.4 gpm)

PLANT H

Chromium metal is produced at this plant by an aluminothermic process using chromium oxide produced by the exothermic reaction of wood flour and sodium dichromate. The production of chromium oxide is not considered here.

The off-gases from the aluminothermic process are cleaned in a unique "wet baghouse" system shown in Figure 15. Water sprays and a wet dynamic scrubber precede the baghouse and an air heater which raises the gas temperature above the dewpoint to prevent bag clogging. The bags are cleaned by water sprays between each batch-type operation and are dried prior to the next cycle. The wastewater effluent contains suspended solids and hexavalent chromium as the principal pollutants.

The wastewater is treated batchwise in a series of rubber lined lagoons as shown in Figure 16. There are three reduction basins in which each treat one batch of wastewater from the baghouse. Treatment time as measured from the filling of the basin to discharge of treated wastewater to the sludge lagoon should take approximately two hours. Two 56,775 liters (15,000 gallon) tanks are provided for treatment flexibility and storage.

Sufficient sulfuric acid addition capacity is provided to lower the wastewater pH to about 3.0. At maximum conditions, the daily sulfuric acid requirements are expected to be 454 kg/day (1,000 lbs/day).

Sulfur dioxide added to the wastewater through chlorine-type sulfonators is the reducing agent for the treatment process. The theoretical reduction of chromium requires approximately .5 kg (1 lb.) of sulfur dioxide for every kg (2 lb.) of chromates (CrO_3) to be reduced. On a daily basis, 136 kg (300 lb.) of SO_2 is required.

Upon completion of chemical reduction, sodium hydroxide is added to the basin to raise the pH to form an insoluble chromium hydroxide from the reduced chrome. Approximately 36 kg/day (80 lb/day) of sodium hydroxide is required under maximum flow conditions.

Diffused air agitation is provided to completely mix the reduction basin and to prevent the settling of precipitated solids before the waste water is released to the sludge lagoons. The air supply capacity was based on providing 0.054 cu. m/hr/gal. (0.5 cu. ft./hr/gal.) of waste water to be mixed.

The rubber-lined sludge lagoons have an approximate volume of 1,741,100 liters (460,000 gallons) when gravity flow is used from the reduction basins to the lagoons. Pumping the treated wastewater, however, could theoretically utilize the full 3.5 m (11 ft.) depth of the lagoon and would almost triple their capacity. Currently, gravity flow is used, but provisions have been made for the later addition of pumps if needed.

Sludge production is expected to approach 454 kg/day (1,000 lb/day). Approximately six months of sludge storage is provided before removal would be required. This storage capacity will allow for 180 days of continuous operation at the maximum flow and chromium concentrations.

Analytical data from the plant survey are summarized in Tables 82 through 89 for sampling points indicated in Figure 16. The measured temperature rise of the cooling water was 6°C (10.0°F). The cooling pond is designed for a maximum rise of 2.78°C (5°F), and is 61 m X 67 m (200 ft. X 220 ft.).

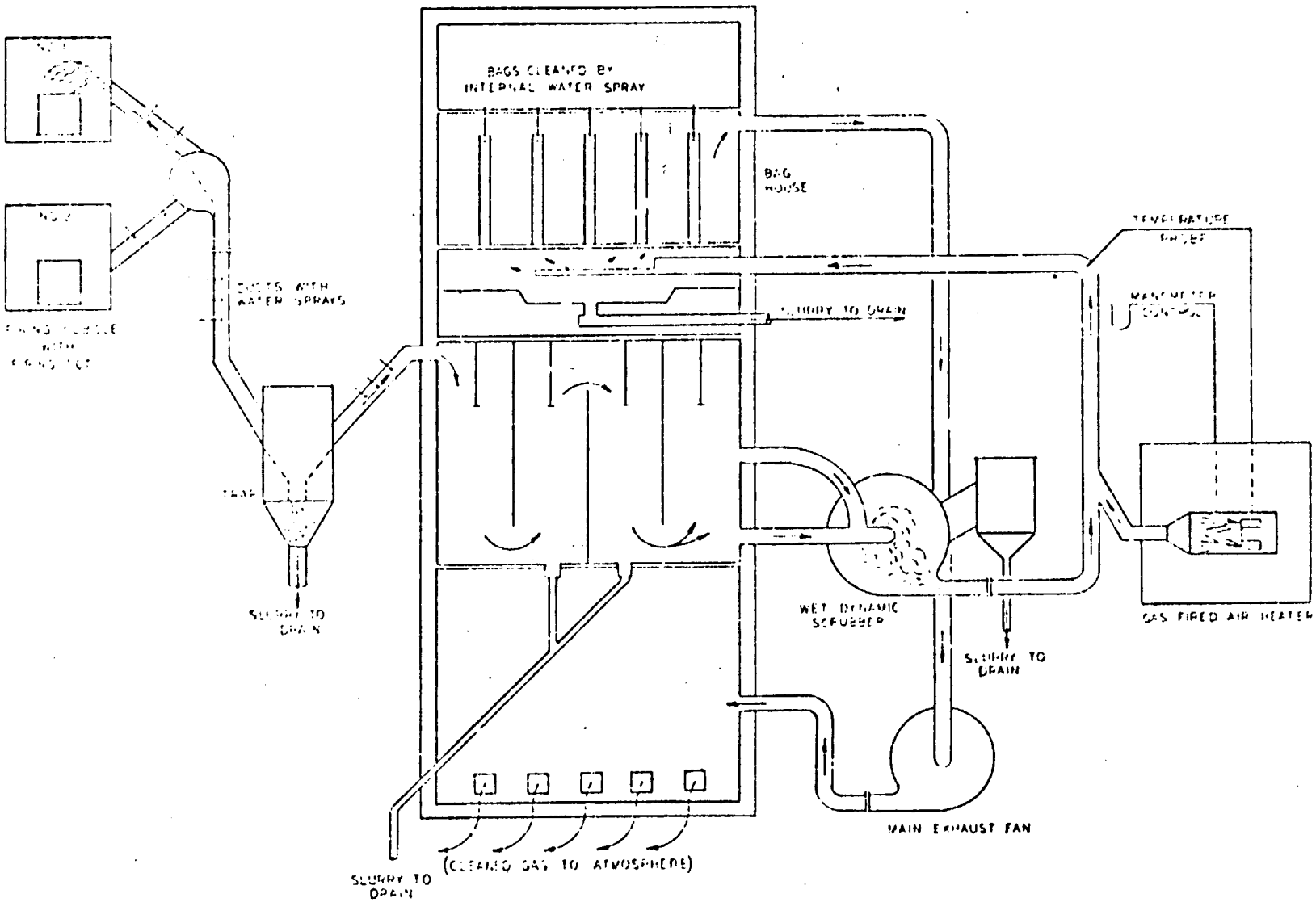

Figure 15. Diagram of "Wet Baghouse" System.

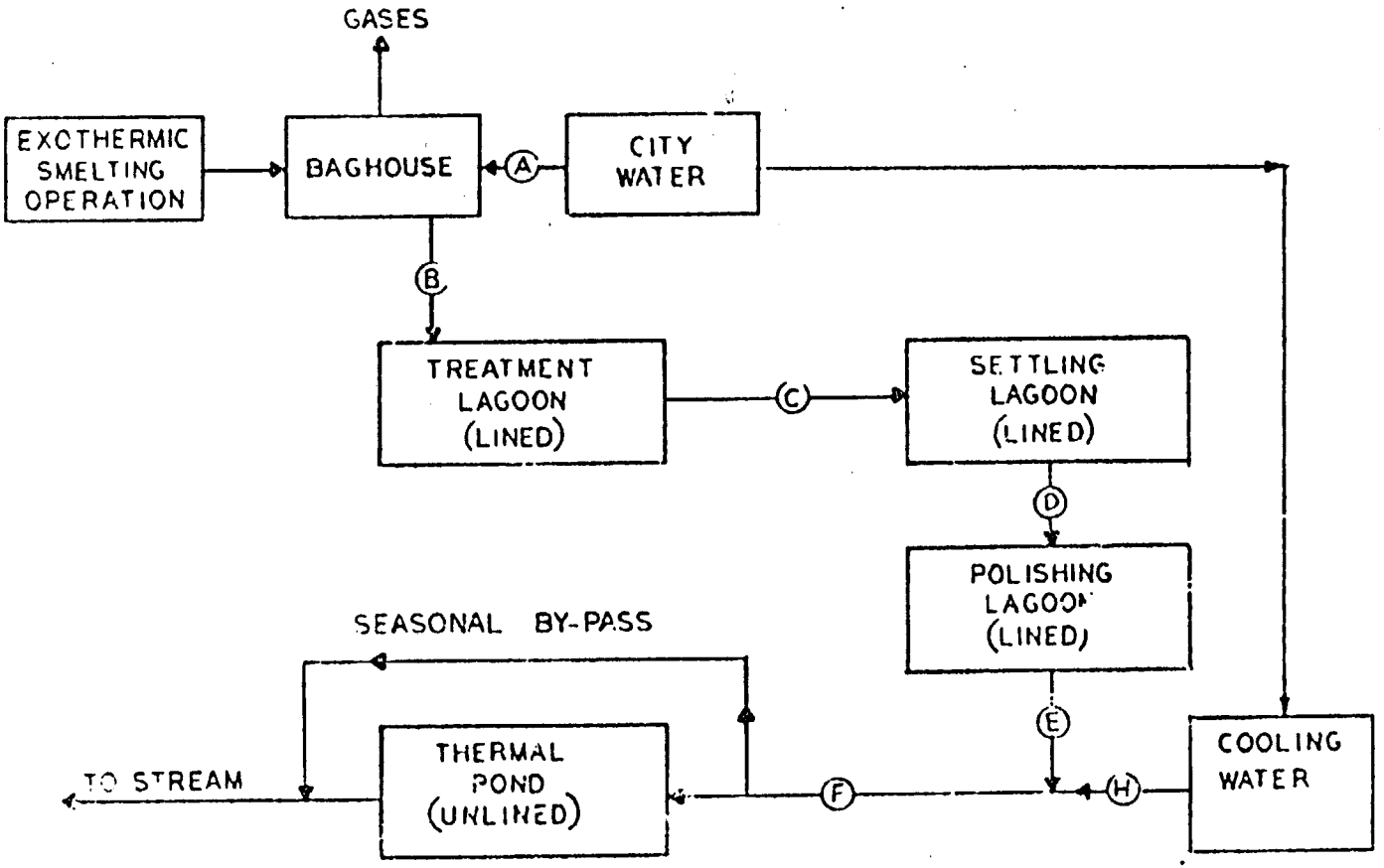

Figure 16. Plant H Water and Wastewater Systems.

TABLE 82. ANALYTICAL DATA -SPA- PLANT H
INTAKE CITY WATER

Constituent	Concentrations, mg/l (except as noted) Minimum	Maximum	Average	Net Average
Suspended Solids	-	-	-	-
Total Chromium	-	-	-	-
Hexavalent Chromium	-	-	-	-
Total Cyanide	-	-	-	-
Free Cyanide	-	-	-	-
Manganese	0.026	0.026	0.026	-
Oil	-	-	-	-
Iron	0.22	0.29	0.25	-
Zinc	0.016	0.016	0.016	-
Aluminum	-	-	-	-
Phenol	-	-	-	-
Phosphate	-	-	-	-
Lead	-	-	-	-
pH (units)	5.6	5.7	5.6	

Average Flow = 28.4 l/sec. (450 gpm)

TABLE 83. ANALYTICAL DATA -SPB- PLANT H
BAGHOUSE WASTEWATER DISCHARGE

Constituents	Concentrations, mg/l (except as noted) Minimum	Maximum	Average	Net Average
Suspended Solids	106	220	136	136
Total Chromium	101	121	112	112
Hexavalent Chromium	17	44	37	37
Total Cyanide	-	-	-	0
Free Cyanide	-	-	-	0
Manganese	0.040	0.051	0.048	0.022
Oil	1.2	2.6	1.8	1.8
Iron	0.04	0.04	0.04	0
Zinc	0.002	0.003	0.002	0
Aluminum	-	-	-	0
Phenol	-	-	-	0
Phosphate	-	-	-	0
Lead	-	-	-	0
pH (units)	12.3	12.4	12.3	

Average Flow = 100,303 l/day (26,500 gal/day)

TABLE 84. ANALYTICAL DATA -SPC- PLANT H
TREATED BAGHOUSE WASTEWATER

Constituent	Concentrations, mg/l (except as noted) Minimum	Maximum	Average	Net Average
Suspended Solids	674	748	713	713
Total Chromium	114	114	114	114
Hexavalent Chromium	0.047	0.363	0.162	0.162
Total Cyanide	-	-	-	0
Free Cyanide	-	-	-	0
Manganese	0.41	0.73	0.54	0.51
Oil	0.8	2.0	1.3	1.3
Iron	2.64	3.73	3.27	3.01
Zinc	0.90	1.53	1.27	1.25
Aluminum	127	130	129	129
Phenol	-	-	-	0
Phosphate	0.41	0.50	0.46	0.46
Lead	-	-	-	0
pH (units)	4.7	6.2	5.4	

Average Flow = 100,303 l/day (26,500 gal/day)

TABLE 85. ANALYTICAL DATA -SPD- PLANT H
SETTLING LAGOON DISCHARGE

Constituents	Concentrations, mg/l (except as noted) Minimum	Maximum	Average	Net Average
Suspended Solids	58	70	66	66
Total Chromium	17.9	18.3	18.1	18.1
Hexavalent Chromium	0.189	0.213	0.208	0.208
Total Cyanide	-	-	-	0
Free Cyanide	-	-	-	0
Manganese	0.70	0.70	0.70	0.67
Oil	3.4	3.4	3.4	3.4
Iron	0.24	0.42	0.32	0.06
Zinc	0.77	0.77	0.77	0.75
Aluminum	31	31	31	31
Phenol	-	-	-	0
Phosphate	0.05	0.05	0.05	0.05
Lead	-	-	-	0
pH (units)	4.9	4.9	4.9	

Average Flow = l/sec. (gpm)

TABLE 86. ANALYTICAL DATA -SPE- PLANT H
POLISHING LAGOON DISCHARGE

Constituent	Concentrations, mg/l (except as noted) Minimum	Maximum	Average	Net Average
Suspended Solids	10	56	38	38
Total Chromium	7.13	7.56	7.40	7.40
Hexavalent Chromium	0.214	0.261	0.245	0.245
Total Cyanide	-	-	-	0
Free Cyanide	-	-	-	0
Manganese	0.92	0.92	0.92	0.89
Oil	4.0	4.0	4.0	4.0
Iron	0.17	0.17	0.17	0
Zinc	0.44	0.44	0.44	0.42
Aluminum	15.3	15.3	15.3	15.3
Phenol	-	-	-	0
Phosphate	0.05	0.05	0.05	0.05
Lead	-	-	-	0
pH (units)	5.2	5.2	5.2	

Average Flow = 0.32 l/sec. (5 gpm)

TABLE 87. ANALYTICAL DATA -SPF- PLANT H
PLANT DISCHARGE

Constituents	Concentrations, mg/l (except as noted) Minimum	Maximum	Average	Net Average
Suspended Solids	-	22	6	6
Total Chromium	0.37	0.81	0.57	0.57
Hexavalent Chromium	0.024	0.090	0.057	0.057
Total Cyanide	-	0.016	0.009	0.009
Free Cyanide	-	0.016	0.009	0.009
Manganese	0.22	0.40	0.32	0.29
Oil	2.0	4.0	2.7	1.8
Iron	0.27	0.34	0.29	0
Zinc	0.023	0.074	0.048	0.032
Aluminum	-	-	-	0
Phenol	-	-	-	0
Phosphate	0.05	0.05	0.05	0.04
Lead	-	-	-	0
pH (units)	5.2	6.1	5.7	

Average Flow = 18.9 l/sec. (300 gpm)

TABLE 88. ANALYTICAL DATA -SPG- PLANT H
PLANT WELL WATER

Constituent	Concentrations, mg/l (except as noted) Minimum	Maximum	Average	Net Average
Suspended Solids	-	-	-	-
Total Chromium	-	-	-	-
Hexavalent Chromium	-	-	-	-
Total Cyanide	-	-	-	-
Free Cyanide	-	-	-	-
Manganese	0.037	0.037	0.037	-
Oil	4.6	4.6	4.6	-
Iron	0.52	0.57	0.55	-
Zinc	0.011	0.011	0.011	-
Aluminum	-	-	-	-
Phenol	-	-	-	-
Phosphate	0.05	0.05	0.05	-
Lead	-	-	-	-
pH (units)	5.2	5.3	5.3	

Average Flow = 3.01 l/sec. (48 gpm)

TABLE 89. ANALYTICAL DATA -SPE- PLANT H
COOLING WATER

Constituents	Concentrations, mg/l (except as noted) Minimum	Maximum	Average	Net Average
Suspended Solids	40	40	40	40
Total Chromium	0.44	0.44	0.44	0.44
Hexavalent Chromium	0.38	0.38	0.38	0.38
Total Cyanide	-	-	-	0
Free Cyanide	-	-	-	0
Manganese	1.45	1.45	1.45	1.42
Oil	2.2	2.2	2.2	2.2
Iron	1.49	1.49	1.49	1.24
Zinc	0.060	0.060	0.060	0.044
Aluminum	0.27	0.27	0.27	0.27
Phenol	-	-	-	0
Phosphate	-	-	-	0
Lead	-	-	-	0
pH (units)	6.0	6.0	6.0	

Average Flow = 18.6 l/sec. (295 gpm)

In Figure 17, a waste treatment scheme is shown in which all of the waste constituents for which guidelines have been developed can be reduced to minimal concentrations. Not all waste streams will contain all constituents and appropriate modifications of this general scheme can be made to reduce costs.

The first step consists of raising the pH of the waste stream to about 11 and the addition of sufficient chlorine to maintain a free residual, followed by sedimentation. In this step, phenol is oxidized, cyanide is oxidized to cyanate, and manganese is precipitated as the hydroxide. In the second step, additional chlorine is added and the pH is lowered to 7.0 by a suitable acid. With a reaction time of 60 minutes, the cyanate is oxidized to CO_2 and N_2. In the third step, the pH is lowered to 2.5 and sulfur dioxide is added. Allowing a reaction time of 30 minutes, the hexavalent chromium is reduced to trivalent. The fourth step consists of raising the pH to 8.2, adding a polyelectrolyte, and allowing sedimentation. At this point, the trivalent chromium will be removed and final clarification accomplished. With a sufficiently low overflow rate and addition of flocculants in sufficient quantities, an effluent solids concentration of 25 mg/l of suspended solids can be attained and metals reduced to low levels.

Sand filtration of the final clarifier effluent, with backwash returned to the clarifier, can reduce suspended solids concentrations to 15 mg/l or less. After filtration, the water may be recycled back to the scrubbers.

Obviously, not all plants will require the entire treatment system. For example, plants (such as B or C) producing only manganese or only silicon products in covered furnaces, will require only the first, second and fourth (excluding raising the pH to 8.2) steps of the treatment scheme for removal/destruction of cyanide, phenols, manganese and suspended solids. A plant which specializes in chromium products using open furnaces, would require only the third and fourth steps for reduction of hexavalent chromium and removal of the trivalent and suspended solids. For those plants which produce a variety of products, an alternative solution may be the segregation of wastes and installation of the various treatment modules for chromium reduction, cyanide destruction, etc., to be utilized in series or parallel as required to achieve the proper results. This might result in considerable economies over treatment of all wastes for all parameters.

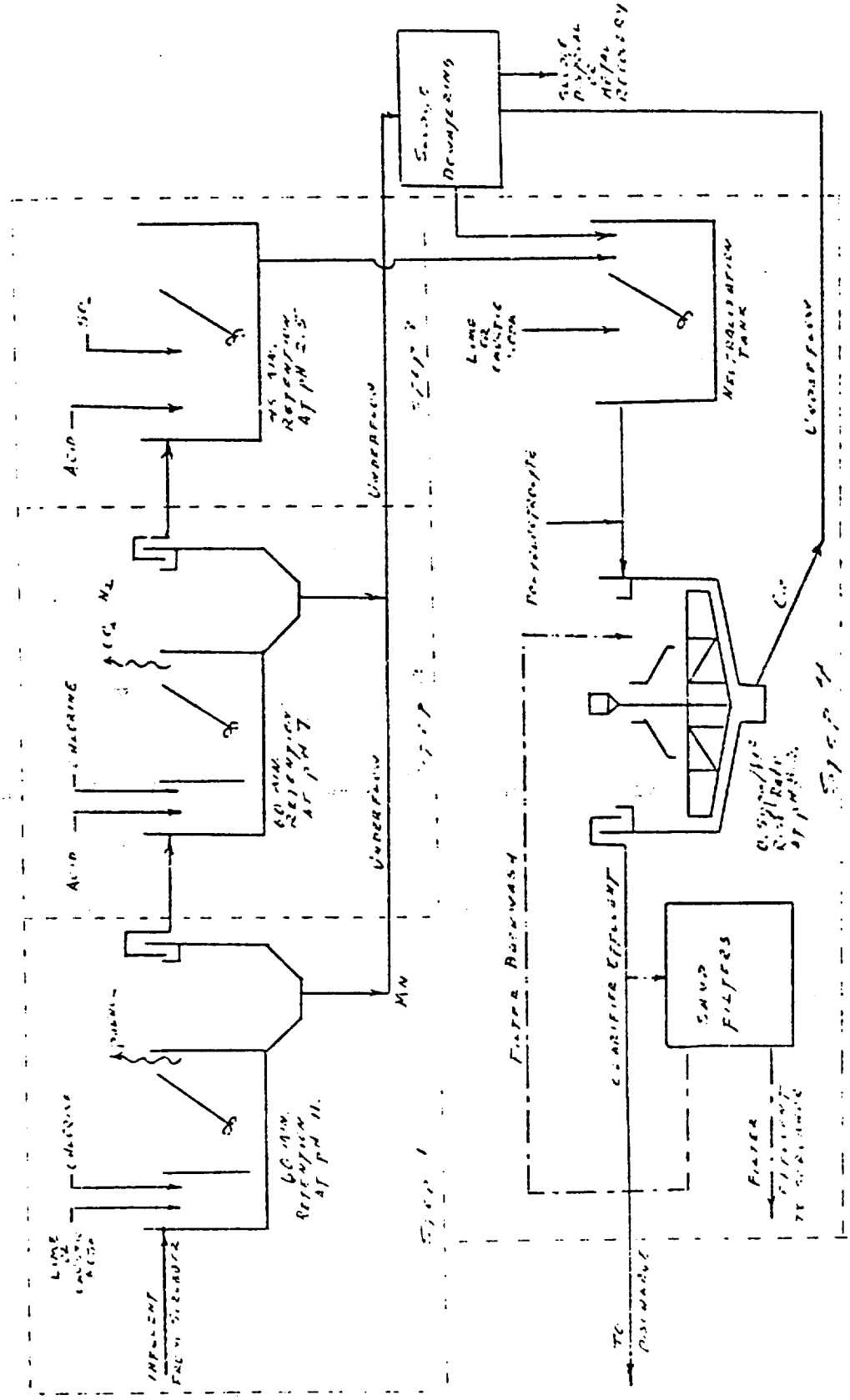

Figure 17. Diagram of Wastewater Treatment System.

Some plants which do not have any particular problem with metals or cyanides may be able to use a system similar to that in practice at Plant E, i.e., the addition of flyash from a nearby power station to scrubber waste water, followed by settling. The average suspended solids concentration reached by this system was 15 mg/l. It may be useful to some plants to operate such a system, using existing lagoons, to meet the 1977 standards.

Another alternative solution for 1977 might be the conversion of once-through systems to recirculation, with only the blowdown treated for removal of metals (obviously, recirculated water would need to be treated for removal of suspended solids). Since less chemicals would be required for treatment, in addition to smaller tanks, etc., this might result in some savings over the costs estimated in Section VIII.

Some plants may be able to meet the 1977 guidelines simply by modifying their present treatment system somewhat, while some other plants (such as G) seem to meet all the 1977 pollutant load requirements for scrubber waste water. For example, both plants C and D appear to meet all but one of the 30 day average pollutant load requirements for 1977 (manganese and suspended solids, respectively). Plant C should be able to meet fully the 1977 pollutant load standards by some additional treatment for manganese removal prior to clarification. Plant D may be able to rectify the suspended solids load by using more of their clarification capacity (one of their three clarifiers was not operating at the time of our visit), or by making the flow into the clarifiers more quiescent (which may have caused improper distribution of the inlet water), or by backwashing the sand filter more frequently.

Plant B apparently meets all 1977 pollutant load standards but that for suspended solids (in spite of using water on a once-through basis). It is possible that the suspended solids level after the final two settling lagoons (which was not checked) may presently be low enough to meet the standards, but possibly some additional clarification might be necessary. Plant E probably meets the 1977 standard for suspended solids (since the concentration at the outfall was 15 mg/l).

The treatment system as shown in Figure 17 is not utilized in toto in any one plant in the industry. However, the modules which comprise the sytem are in use in this, or similar, industries.

Plant P, studied as part of the Alloy and Stainless Steel Industry (Ref. 33), utilizes a treatment system for hexavalent chromium reduction, neutralization and clarification almost identical to that shown in steps 3 and 4 of Figure 17. This system had an average influent concentration of about 18 mg/l total chromium and 16 mg/l hexavalent chromium. After treatment, the average concentrations were 0.10 and less than 0.01 mg/l, respectively. This sytem was operating on a continuous basis. Plant S of the Iron and Steel Industry study (Ref. 35), achieved an average suspended solids concentration of 22 mg/l after clarification of scrubber water from a B.O.F. Plant B achieved concentrations of 0.22 mg/l cyanide after alkaline chlorination, while the phenol level was reduced to 0.50 mg/l. Plant D demonstrates the use of alkaline precipitation of metals and the use of sand filters, although not in a completely optimum manner. The treatment scheme shown may be thought to be based upon the components of all these systems, although as discussed above, any particular plant may not find it necessary to utilize the entire system.

Other treatment methods in use in the industry appear to be relatively ineffective for some constituents. For examples, the relatively high concentrations of suspended solids in the treated water from the clarifier and the sand filter at Plant D have already been discussed, along with suggestions as to the cause for such concentrations. Although flyash treatment appears to work well for removal of suspended solids, as utilized at Plant E, the same treatment has little or no effect on the content of metals found in the effluent. Although the potassium permanganate used at Plant C might be expected to oxidize the cyanide as well as some of the manganese, such was not the case, since the cyanide and manganese concentrations in the overflow were almost as high as in the raw waste. It is possible that higher dosages may more effectively oxidize these wastes, but the cost of such treatment would almost certainly be higher than chlorination. Although the cyanide destruction system was fairly ineffective, this plant stood out in the recirculation and reuse of water from scrubbers and cooling. Some of the blowdown from the cooling tower was used as makeup water for the scrubber system, and 97 percent of the scrubber water was recirculated, the only blowdown being the clarifier underflow.

The control and treatment technologies which have been identified herein are identified as applicable to the various industry categories in Table 90.

Table 90. CONTROL AND TREATMENT TECHNOLOGIES BY CATEGORY

Category	Treatment Technology	Description
I	1	Chemical treatment, clarifier-flocculators, recirculation at the scrubber
	2	Chemical treatment, clarifier-flocculators, sand filters and process water recirculation
II	1	Chemical treatment, clarifier-flocculators
	2	Chemical treatment, clarifier-flocculators, sand filters and process water recirculation
III	1	Clarifier-flocculators, chemical treatment (if necessary)
	2	Clarifier-flocculators, chemical treatment (if necessary), process water recirculation

It should be noted that with the exception of the slag processing operations, the raw waste loads and final effluent loads have been calculated in terms of mwhr as the production basis. This was done for the following reasons, after examining the other possible basis (kg (tons):

1. Uncontrolled emission factors (upon which the raw waste loads depend), are more uniform over the various types of products when expressed as kg (lb)/mwhr, rather than as kg/kkg (lb/ton).

2. Power usage is already such a large factor in production costs (about 30 percent) that an increase in power consumption so that the permissible effluent discharge would be higher is very unlikely.

3. Power usage is very well monitored at the furnace itself, usually with a continuous automatic recording device.

4. Furnaces are commonly referred to in the industry as '10 mw' or '35 mw', rather than '50 ton' or 150 ton', as is common practice in the steel industry.

5. The tonnage which may be produced for a given power consumption is fairly wide (factor of 10) and depends on the product, and numerous products can be produced in a given furnace. Use of kg/kkg (lb/ton) as limitations would involve the permit writer in writing a permit with

many different conditions. The reader may refer to Table 18 for comparisons of power usage per ton for various products.

Aggregate raw waste loads, representing for some parameters such as chromium and manganese the maximum load which might be expected in the waste, are shown in Tables 91 through 93. The manganese concentrations, for example, would probably only be encountered at these levels from a furnace producing manganese products.

The loads were calculated from flows and concentrations as follows:

load (kg/kkg (lb/ton)) = mass flow rate of water (kg(lb)/hr) x concentration = (10^6 x furnace power (mw))

load (kg/kkg (lb/ton)) = mass flow rate of water (kg(lb/hr) x concentration = (amount processed (kkg(tons)/hr) x 10^6)

Furnace power may be calculated by dividing the number of megawatt-hours used in the furnace in a 24 hour period by 24 hours.

Tables 91-93, describing raw waste and treated effluent loads, have been constructed on the following bases:

Category I - Open Electric Furnaces with Wet Air Pollution Control Devices.

Raw Waste Load - Flow based upon the total water flow in the scrubber (113.6 l/sec (1800 gpm)) rather than effluent water flow at Plant E, sample point G from the scrubber (44.2 l/sec (700 gpm). Concentrations of suspended solids and manganese at that sample point adjusted accordingly to compensate for increased flow. Chromium concentrations taken from Plant G, sample point G.

Treatment Level 1 - concentrations shown are those achievable by the treatment system as shown in Figure 17, less the sand filter and recirculation portions and are generally somewhat higher than those at Plant D, sample point E. Loads are based upon concentrations shown and a water use of 6382 l/mwhr (1686 gal/mwhr).

Treatment Level 2 - Concentrations based on entire treatment system as shown in Figure 17, including the sand filter and recirculation, and are generally somewhat higher than those at Plant D, sample point E. These levels would require better operation of the treatment system than was necessary in Level 1. Loads based upon blowdown rate of 783 l/mwhr (207 gal/mwhr).

Category II - Covered Electric Furnaces and Other Smelting Operations with Wet Air Pollution Control Devices.

Raw Waste Load - Concentrations and loads as at Plant B, sample point B, except that chromium concentrations are taken from Plant G, sample point C,

TABLE 92. INDUSTRY CATEGORY II
COVERED ELECTRIC FURNACES AND OTHER SMELTING OPERATIONS
WITH WET AIR POLLUTION CONTROL DEVICES

	Raw Waste Load			Level I Effluent 30 Day Average			Level I Effluent 24 hr. Maximum			Level II Effluent 30 Day Average			Level II Effluent 24 hr. Maximum		
	kg/mwhr	lb/mwhr	mg/l	kg/mwhr	lb/mwhr	mg/l	kg/mwhr	lb/mwhr	mg/l	kg/mwhr	lb/mwhr	mg/l	kg/mwhr	lb/mwhr	mg/l
Suspended Solids	13.02	28.67	1555	0.209	0.461	25	0.419	0.922	50	0.016	0.035	15	0.032	0.071	30
Total Chromium	0.040	0.088	4.76	0.004	0.009	0.5	0.008	0.018	1.0	0.0005	0.0012	0.5	0.001	0.002	1.0
Hexavalent Chromium	0.003	0.006	0.32	0.0004	0.0009	0.05	0.0008	0.0018	0.1	0.00005	0.0001	0.05	0.0001	0.0002	0.10
Total Cyanide	0.021	0.046	2.49	0.002	0.005	0.25	0.004	0.009	0.5	0.0003	0.0006	0.25	0.0005	0.001	0.5
Manganese	3.74	8.24	447	0.042	0.092	5.0	0.084	0.184	10	0.005	0.012	5	0.011	0.023	10
Phenol	0.061	0.134	7.27	0.004	0.009	0.5	0.006	0.013	0.7	0.0002	0.0005	0.2	0.0004	0.0009	0.4

	Raw Waste Load		Level I Effluent		Level II Effluent	
	gal/mwhr	l/mwhr	gal/mwhr	l/mwhr	gal/mwhr	l/mwhr
Flow	2210	8365	2210	8365	280	1060

	Value	Value	Value
pH	6.0-9.0	6.0-9.0	6.0-9.0

TABLE 93. INDUSTRY CATEGORY III
SLAG PROCESSING

	Raw Waste Load			Level I Effluent						Level II Effluent					
				30 Day Average			24 hr. Maximum			30 Day Average			24 hr. Maximum		
	kg/kkg processed	lb/ton processed	mg/l	kg/kkg processed	lb/ton processed	mg/l	kg/kkg processed	lb/ton processed	mg/l	kg/kkg processed	lb/ton processed	mg/l	kg/kkg processed	lb/ton processed	mg/l
Suspended Solids	40.0	91.9	804	1.330	2.659	25	2.659	5.319	50	0.136	0.271	25	0.271	0.542	50
Total Chromium	0.109	0.217	2.04	0.026	0.053	0.5	0.053	0.106	1	0.0027	0.0054	0.5	0.0054	0.011	1
Manganese	2.87	5.74	54	0.266	0.532	5	0.532	1.064	10	0.027	0.054	5	0.054	0.108	10

	Value	Value	Value
pH	6.2	6.0-9.0	6.0-9.0

	l/kkg	gal/ton	l/kkg	gal/ton	l/kkg	lb/ton
Flow	53,100	12,750	53,100	12,750	5419	1300

and manganese concentrations taken from Plant C, sample point C. Loads calculated from Plant B, sample point B, flow.

Treatment Level 1 - Concentrations same as for Category I, treatment level 1, except that cyanide and phenol concentrations are based upon those found at Plant B, sample point D. Loads in kg (lb)/mwhr were calculated using the flows found at Plant B, sample point D.

Treatment Level 2 - Concentrations same as for Category I, treatment level 2, with cyanide concentration based on Plant P, sample point D. Loads in kg (lb)/mwhr based on 1060 l (280 gal)/mwhr being blown down from the recirculation system.

Note: Loads for exothermic and other nonelectric furnace smelting operations based on water usage three times higher (per ton) than for electric furnaces (per mwhr)

Category III - Slag processing

Raw Waste Load - Maximum of Plant B, sample point I, or sample point D.

Treatment Level 1 - Based on use of clarifier-flocculators.

Treatment Level 2 - Based on recirculation of process water after precipitation of fine suspended solids in clarifier-flocculators. Loads based on a blowdown rate of 5419 l/kkg (1300 gal/ton).

The 24-hour maximums are generally twice the 30 day averages and based upon maximum concentrations found at exemplary plants, or those which might be attained during system upsets or the like. In the case of phenol, the limitations are 1.5 times the 30 day average.

STARTUP AND SHUTDOWN PROBLEMS

There have been no problems of consequence identified in connection with the startup or shutdown of production facilities insofar as waste water control and treatment is concerned. As often as not, scrubber water continues to flow during such periods. There might be some upsets in undersized lagoons or clarifiers used in once-through systems if the water flow is abruptly started after a shutdown. Proper operating procedures can easily handle such occurrences and there would be little or no effect in sufficiently large facilities.

Loss of power can effect most of the treatment systems such as chemicals addition for flocculation, cyanide destruction, or chromium reduction-precipitation. In such cases, however, the production process also will stop and little effect on waste water treatment would result.

TEST REPORT 72-PC-15

INTRODUCTION

Under the Clean Air Act of 1970, as amended, the Environmental Protection Agency is charged with the establishment of performance standards for stationary sources which may contribute significantly to air pollution. A performance standard is based on the best emission reduction systems which have been shown to be technically and economically feasible.

In order to set realistic performance standards, accurate data on pollutant emissions must be gathered from the stationary source category under consideration.

Elkem A/S Porsgrunn Elektrometallurgiske (PEA) in Porsgrunn, Norway, was designated as a well-controlled stationary source in the Ferroalloy industry and was thereby selected by OAP for an emission testing program. Testing was conducted on Furnaces 10 and 11 by OAP personnel during August 14-25, 1972.

Furnace 10(L) is a totally enclosed 39 megavolt-ampere (MVA) electric submerged-arc furnace producing silico-manganese. Air pollution control equipment consists of two series venturi scrubbers operating at a total pressure drop of 52 inches of water.

Furnace 11(K) is a totally enclosed 45.6 megavolt-ampere (MGA) electric submerged-arc furnace producing high carbon ferromanganese (FeMn). It is equipped with two parallel Warkaus Venturi scrubber systems for control of the furnace emissions.

Samples were collected after the control devices of each furnace. In the case of Furnace 11, sampling was conducted while one of the dual control systems was in operation (which is normal operation) and also while both systems were operating. The pollutants sampled were filterable and total particulate matter. The carrier gas was analyzed to determine the average stack gas molecular weight. The collected particulates from representative tests were analyzed for trace metals, anion, cations, pH, and ultimate content of carbon, hydrocarbon, and nitrogen.

SUMMARY AND DISCUSSION OF RESULTS

OAP personnel collected a total of fourteen (14) samples for particulate analysis and fourteen (14) integrated bag samples for Orsat analysis of the carrier gas.

Six (6) of the samples were collected downstream of "B" scrubber system when it alone was serving Furnace No. 11. Two tests were then performed when both the "A" and "B" scrubber systems were operating. (Figure IV-1) During these two runs, simultaneous samples were collected downstream of the control systems. Four (4) samples were collected downstream of the scrubber system serving Furnace 10. All sampling was scheduled such that one or more complete furnace tap cycles were included in the sampling period. A furnace tap cycle includes the time period from the start of a metal tap until the start of the next metal tap.

The results of particulate testing are summarized in Tables III-I through III-3. The results of testing on the Furnace 11 "B" scrubber system are presented in Table III-1. The particulate loading in the cleaned gas, based on the full train, ranged from 0.0098 to 0.0392 grains/DSCF*, with an average of 0.0196 grains/DSCF. The stack gas flow rate was relatively consistent during this series of six tests, with an average flow rate of 5321 DSCF/min. Combining this with the dust loadings yield particulate emission rates ranging from 0.455 to 1.83 lb/hr with an average of 0.896 lbs/hr, based on the full train. In order to relate the mass emission rate to a process parameter, the average furnace power loading was determined for each test period. The average furnace loads ranged from 26 to 27 megawatts. Using this factor, the average mass emission on a process load basis ranged from 0.0169 to 0.0678 lb/MW-hr, with an average of 0.0337 lb/MW-hr based on the full train. The particulate collected in the impinger portion of the train averaged 9% of the total catch.

The results of testing while the "A" and "B" systems were operating simultaneously is given in Table III-2. Plant personnel attempted to evenly divide the flow between the two scrubber systems, but the split obtained was approximately 70% through the "B" system and 30% through the "A" system. The

---

* 70°F, 29.92" Hg, dry

TABLE III-1. SUMMARY OF PARTICULATE EMISSIONS,
FCE NO. 11 WITH SINGLE CONTROL SYSTEM

Run No.	B1	B2	B3	B4	B5	B6	Average
Date	8/16/72	8/16/72	8/17/72	8/17/72	8/18/72	8/18/72	---
Percent Isokinetic	98.0	97.3	104.3	102.8	102.4	102.1	---
Volume of Gas Sampled (DSCF)	163.61	173.29	182.77	180.81	171.07	204.24	---
Avg. Fce Load (MW)	26	27	27	26	26	27	---
Stack Flow Rate (DSCFM)	5121	5463	5377	5394	5121	5453	5321
(NM^3/HR)	8077	8617	8481	8508	8077	8601	8393
Particulates, Probe & Filter							
mg	248.3	416.7	179.8	128.4	148.4	113.2	---
grains/DSCF	0.0234	0.0370	0.0151	0.0110	0.0134	0.0085	0.0181
grains/CF @ stack cond.	0.0227	0.0358	0.0083	0.0105	0.0129	0.0082	0.0164
lb/hr	1.03	1.73	0.696	0.508	0.588	0.397	0.825
lb/MW-HR	0.0396	0.0641	0.0258	0.0195	0.0226	0.0147	0.0310
grams/NM^3	0.0589	0.0932	0.0380	0.0277	0.0338	0.0214	0.0455
grams/hour	476	803	322	236	273	184	382
Particulates, Total							
mg	268.1	441.0	195.7	144.4	164.2	129.7	---
grains/DSCF	0.0252	0.0392	0.0165	0.0123	0.0148	0.0098	0.0196
grains/CF @ stack cond.	0.0245	0.0379	0.0091	0.0118	0.0143	0.0094	0.0178
lb/hr.	1.11	1.83	0.757	0.572	0.651	0.455	0.896
lb/MW hr	0.0427	0.0678	0.280	0.0220	0.0250	0.0169	0.0337
grams/NM^3	0.0635	0.0987	0.0416	0.0310	0.0373	0.0247	0.0495
grams/hr.	513	850	353	264	301	212	416
% Impinger Catch	7.20	5.46	8.06	11.2	9.68	12.7	9.0

TABLE III-2. SUMMARY OF PARTICULATE EMISSION,
FCE NO. 11 WITH DUAL CONTROL SYSTEM

Run No.	B7	A7	Total	B8	A8	Total	Average Total
Date	8/20/72	8/20/72	---	8/21/72	8/21/72	---	---
Percent Isokinetic	91.5	100.8	---	98.6	99.9	---	---
Volume of Gas Sampled (DSCF)	302.77	251.33	554.10	260.98	232.48	493.46	---
Avg Fce Load (MW)	27	27	27	27	27	27	---
Stack Flow Rate (DSCFM)	3757	1896	5653	3695	1769	5464	5558
(NM^3/HR)	5926	2990	8916	5828	2790	8613	8764
Particulates, Probe & Filter							
mg	444.0	65.1	509.1	212.5	90.8	303.3	---
grains/DSCF	0.0226	0.0040	0.0164*	0.0125	0.0060	0.0104*	0.0134*
grains/CF @ stack cond.	0.0216	0.0038	---	0.0121	0.0059	---	---
lb/hr	0.728	0.065	0.793	0.396	0.091	0.487	0.640
lb/MW-HR	0.0270	0.0024	0.0294	0.0147	0.0034	0.0181	0.0238
grams/NM^3	0.0569	0.0100	0.0412	0.0315	0.0151	0.0262	0.0337
grams/hour	337	30	367	184	42	226	296
Particulates, Total							
mg	464.8	76.9	541.7	221.7	99.9	321.6	---
grains/DSCF	0.0236	0.0047	0.0173*	0.0131	0.0066	0.0110*	0.0142*
grains/CF @ stack cond.	0.0225	0.0045	---	0.0127	0.0064	---	---
lb/hr.	0.762	0.077	0.839	0.413	0.100	0.513	0.676
lb/MW-hr	0.0282	0.0029	0.0311	0.0153	0.0037	0.0190	0.0250
grams/NM^3	0.0594	0.0118	0.0434	0.0330	0.0166	0.0277	0.0356
grams/hr.	352	35	387	192	46	238	314
% Impinger Catch	4.46	15.6	---	3.87	9.0	---	8.24

* Weighted to correct for unequal flows in each system.

total gas flow (sum of the flows from the "A" and "B" stacks) during these two tests was approximately the same as the flow from the "B" stack during the first six tests.

The average equivalent particulate loading for the total emission (weighted to correct for the different flow rate in each system) was 0.0142 grains/DSCF. The average total mass emission rate was 0.676 lb/hr. During this series of tests, Furnace 11 was operating at an average of 27 megawatts. Thus, a mass emission on a process basis was 0.025 lb/MW-hr. Again the above data are based on the total particulate catch. The portion of the particulate collected in the impinger train averaged 8.2%.

When the two modes of operation for the control systems serving furnace 11 are compared, the dual mode of operation yielded lower total emissions to the atmosphere. The average particulate loading was reduced by 28 percent, the mass emission rate was reduced by 25 percent, and the process load mass emission rate was reduced by 26 percent. However it should be noted that except for Runs B-1 and B-2, the results for the different modes are essentially the same.

During the entire series of tests on Furnace 11, there were no periods of abnormal operation observed. The test data reflect what are considered normal process and operational variations.

The results of testing on Furnace 10 are presented in Table III-3. The average particulate loading based on the full train in the clean gas was 0.0107 grains/DSCF. The mass emission rate averaged 0.22 lb/hr. During the test period, Furnace 10 was operating at 22.5 to 23 megawatts. Using these values, the mass emission rate on a process load basis averaged 0.0097 lb/MW-hr. The averages given above are based on tests C9 and C10 only. During the last hour of test C11 and throughout C12, it was observed that particulate of an entirely different nature was being collected. After test C12 had been completed, it was learned from plant personnel that a fan downstream of the control system, but upstream of the sampling location had begun to vibrate abnormally. This would have caused the particulate matter deposited on the inside of the blower housing and ductwork to be shaken loose and entrained into the gas stream. This fan was replaced after test C12. Based on this

TABLE III-3. SUMMARY OF PARTICULATE EMISSIONS, FCE NO. 10

Run No.	C9	C10	C11	C12	Average
Date	8/23/72	8/23/72	8/24/72	8/24/72	
Percent Isokinetic	105.3	107.4	105.0	104.3	
Volume of Gas Sampled (DSCF)	200.53	216.14	207.58	98.46	
Avg. Fce Load (MW)	23	22.5	23.0	---	
Stack Flow Rate (DSCFM)	2339	2488	2425	2315	2413
(NM^3/HR)	3689	3924	3825	3651	3806
Particulates, Probe & Filter					
mg	147.4	113.7	149.6	331.5	
grains/DSCF	0.0113	0.0081	0.0111	0.0518	0.0097
grains/CF @ stack cond.	0.0105	0.0074	0.0109	0.0473	0.0090
lb/hr	0.227	0.173	0.231	1.03	0.200
lb/MW-HR	0.0099	0.0077	0.0100	---	0.0088
grams/NM^3	0.0285	0.0204	0.0280	0.130	0.0244
grams/hour	105	80	107	475	92
Particulates, Total					
mg	161.6	126.7	167.1	342.9	
grains/DSCF	0.0124	0.0090	0.0124	0.0536	.0107
grains/CF @ stack cond.	0.0115	0.0082	0.0114	0.0489	.0098
lb/hr.	0.240	0.193	0.258	1.06	0.221
lb/MW hr.	0.0108	0.0086	0.0112	---	0.0097
grams/NM^3	0.0290	0.0207	0.0287	0.1350	0.0248
grams/hr.	107	81	110	493	94
% Impinger Catch	8.79	10.3	10.5	3.32	9.0

* Runs C11 and C12 not included in averages. See discussion.

information, the results of tests C11 and C12 are considered to represent an abnormal condition and not representative of usual operation.

Excluding this portion of the test period, there were no other abnormal conditions observed. The data collected during Runs C9 and C10 are considered representative of normal process and operational variations.

The results of the analysis of the carrier gas that were conducted simultaneously with each particulate sample are given in Table III-4. The volumetric percentages of carbon dioxide and oxygen were determined by Orsat procedures, and the remainder of the carrier gas was assumed to be carbon monoxide and nitrogen. The results of this analysis were used to calculate the average molecular weight of the stack gas. The results of the analysis of the particulates collected during tests B1, B3, B4, C9, and C10 are presented in Appendix C. The analysis procedures are outlined in the Appendix.

TABLE III-4

SUMMARY OF GASEOUS TESTING

	Run No.	Gas Composition (Vol %, Dry) CO_2	O_2	$CO + N_2$ (assumed to be remainder)
Fce No. 11	B1	42.9	0.29	56.2
	B2	42.0	0.6	57.4
	B3	39.6	0.6	59.8
	B4	41.1	0.6	58.3
	B5	42.6	0.8	56.6
	B6	40.5	0.5	59.0
	B7	38.6	1.3	60.1
	A7	38.1	0.9	61.0
	B8	38.8	0.9	60.2
	A8	37.6	1.0	61.4
Fce No. 10	C9	13.4	0.4	86.2
	C10	13.2	0.4	86.4
	C11	13.3	0.9	85.8
	C12	12.4	0.4	87.2

PROCESS DESCRIPTION AND OPERATION

A. General Furnace Description

The submerged arc electric furnace consists of a high temperature refractory-lined hearth with a tap hole arrangement at levels as appropriate for intermittent metal and slag tapping. The outer furnace shell and cover components are fabricated from steel and are air and water cooled. Over the hearth, there are three vertically suspended carbon electrodes arranged in a delta formation. These carbon electrodes are submerged three to five feet into the furnace charge and convert electrical energy to heat energy. The metallic oxide ores are reduced by the carbonacious material in the charge in this high temperature reaction zone. Since a limited amount of oxygen is available, large quantities of carbon monoxide are produced by the oxidation of the carbonacious materials. In addition, large quantities of other gases are formed by the reduction of the oxide ores. These gases entrain particulates at the high temperature interior regions of the furnace and also entrain furnace charge material particles in the upper areas of the furnace.

The furnace charge materials and their pretreatment vary depending on the quality of raw materials used and the ferroalloy being produced. No pretreatment (such as drying, sintering, crushing, etc.) of the furnace charge materials was being performed for either furnace tested at Elkem A/S PEA.

B. Furnace No. 11

A schematic diagram of Fce 11 is shown in Figure IV-1.

Furnace 11 is rated at 30 megawatts maximum power. High carbon ferromanganese was being produced in the furnace. During the test periods, the furnace was operating at approximately 26-27 megawatts. This is 85-90 percent of the maximum rated power load. The average megawatt load during each test period is given in Table IV-1.

TABLE IV-1. POWER LOADS, FCE NO. 11

Run No.:	B-1	B-2	B-3	B-4	B-5	B-6	B7-A7	B8-A8
Avg. MW Load:	26	27	27	26	26	27	27	27

The various furnace charge constituents are conveyed from the raw storage area to one (or more) of 16 storage bins. Proper amounts of each material are then weighed into four mixing bins. The contents of these bins are fed by vibratory feeders onto a belt conveyer which directs the materials to one of 12 bins directly above the furnace. The furnace is charged by gravity feed from these bins. The entire mixing and charging process is automated. A typical furnace charge batch is given in Table IV-2.

TABLE IV-2. TYPICAL FURNACE CHARGE BATCH, FCE NO. 11

Material	Weight (kg)	Percent
Coke (Germany)	285	9.1
Coke (Norway)	160	5.1
Coke (England)	50	1.6
Ore (South Africa)	300	9.5
Amapa (Brazilian ore)	860	27.3
Mamatwan (ore)	650	20.7
Takorade (Ghana ore)	440	14.0
Carbonate (Ghana)	300	9.5
Quartz	70	2.2
Conveyor mixture (ore + coke)	30	1.0
TOTAL	3145	100.0

The complete tapping cycle for Furnace 11 covered a duration of 4½ to 5 hours. Two hours after a slag tap, a metal tap was performed. This was followed approximately 2½ hours later by another slag tap. Testing by EPA was performed for periods of 4½ to 5 hours such that the complete furnace cycle

would be included. The typical product (metal) analysis of the ferromanganese produced in Furnace 11 during the test periods, and the average metal production during the test periods is given in Table IV-3.

TABLE IV-3. METAL PRODUCTION RATES AND ANALYSIS, FCE 11

Run No.:	B-1 to B-6 (8/12-8/19/72)	B-7,A-7 to B-8, A-8 (8/20-21/72)
Production Rate:	235 tons/day (metric)	244 tons/day (metric)

Product Analysis:

Component	%
Mn	78.40
Fe	14.00
Si	0.19
C	6.80
P	0.17

The air pollution control system consists of two parallel three-stage Warkaus Venturi gas cleaning systems. This system is rather unique since it operates without the use of fans to provide draft. Aspiration of gases is provided by water injection at the venturis. Water injection pressures for all stages were reported as approximately 400 psi and approximate water flow rates during the test periods were as follows:

Venturi B-1	250 gpm
Venturi B-2	200 gpm
Venturi B-3	225 gpm
Total Water Flow	675 gpm

Water for the injection systems was obtained from a nearby river and was not recirculated to the scrubbers. The dirty scrubber water was treated and the

collected solids were separated by a vacuum filter before discharge back into the river. The "A" venturi system water pressures and flow rates were identical to those of the "B" system.

Elkem personnel normally operate one system and use the second as a standby. Six tests were performed by EPA to determine the particulate emissions from FCE 11 downstream of the control system when only the "B" venturi system was in operation. The "A" system was physically disconnected from the furnace. Two tests were performed by EPA when both venturi systems were in operation. For these two tests, plant personnel attempted to evenly divide the gas flow to the two systems by adjustment of regulators in the exit stacks. Results for all tests are presented in the summary of particulate emissions section.

After scrubbing, the exiting stack gases were flared. The opacity was less than 10 percent after the flare.

C. Furnace 10

A schematic diagram of Furnace 10 is shown in Figure IV-2.

Furnace 10 is rated as 27 megawatts maximum power load. Silicomanganese was being produced in this furnace during testing. The average power load during testing was 23 MW. This is 85 percent of maximum capacity. The average power load during each test period is given in Table IV-4.

TABLE IV-4. POWER LOADS, FCE 10

Run No.:	C-9	C-10	C-11	C-12
Avg MW:	23	22.5	23.0	--

The data from test C12 is not considered representative of the controlled emissions. A fan located downstream of the dust collection system and upstream of the EPA sampling location malfunctioned and began shaking loose the particulate accumulations inside the fan housing and ductwork. This was first noted by the EPA test team when particulate of a different nature accumulated on the outside of the test probe during the latter portion of the C11 test. Therefore, the test data resulting from the test C11 is also considered to be biased toward the high side.

The furnace charge mixing and feeding system is essentially the same as that described for Furnace 11. A typical furnace charge batch for silicomanganese production is given in Table IV-5.

TABLE IV-5. TYPICAL FURNACE CHARGE BATCH, FCE 10

Component	Weight (kg)	Percent
Quartz	280	11.8
FeMn Slag	1200	50.6
Ore (South Africa)	400	16.8
Dolomite	70	2.9
Metal Remelt	120	5.1
Coke (Norway)	150	6.3
Coke (Germany)	155	6.5
TOTAL	2375	100.0

Furnace 10 is operated on an approximately 2½ hours tapping cycle. Tapping was accomplished as a combined metal and slag tap. Separation was accomplished by a manual skimming of the slag from the ladle. Testing was conducted for approximately 5 hours such that 2 furnace cycles would be covered.

The typical product analysis and production rate during testing is given in Table IV-6.

TABLE IV-6. METAL PRODUCTION RATES AND ANALYSIS, FCE 10

Run No: C-9, C-10 (8/23/72) C-11 (8/24/72)
SiMn Production: 103 tons/day (metric) 107 tons/day (metric)
Production Analysis:

Component	Percent
Mn	68.30
Fe	11.30
Si	19.30
C	0.88

The air pollution control system consists of two venturi scrubbers in series. Draft was provided by two 100 HP fans in series. The first venturi was essentially used as a gas conditioner and was operated at a pressure drop of 2 inches of water. The second venturi was operated at a pressure drop of approximately 50 inches of water. The combined scrubber water flow rate to both venturi scrubbers was estimated as 355 gpm. Water for the scrubbers is obtained from a nearby river and is not recycled to the scrubbers. The dirty scrubber water is treated in a system similar to that used on Furnace 11 before discharge.

5.2 CALCIUM CARBIDE MANUFACTURE

EPA 440/1-75/038

At the time of publication of this information (1975), there were four producers of CaC_2:

Airco, Inc., Airco Alloys and Carbide Division:

Louisville, Kentucky - 150,000 tons annually, covered furnace

Calvert City, Kentucky - 325,000 tons annually, covered furnace

Midwest Carbide Corp:

Keokuk, Iowa - 30,000 tons annually, covered furnace

Pryor, Oklahoma - 50,000 tons annually, open furnace

Pacific Carbide and Alloys Co.:

Portland, Oregon - 20,000 tons annually, open furnace

Union Carbide Corp. Ferroalloys Division:

Ashtabula, Ohio - 228,000 tons annually, covered furnace

In the production of calcium carbide by the electric arc furnace process, the only source of process water pollutants is the use of wet air pollution control devices such as scrubbers. The sources of air pollution are thus of importance. Particulates are emitted from coke drying, crushing, grinding and sizing of the furnace operations. The particulate emissions from the drying, crushing and sizing operations are generally handled in dry collectors such as baghouses or cyclones. Dry collection is also used for the fumes from the furnace tapping and emissions from the electrode areas in a covered furnace. Wet scrubbers may be used to handle the gases from the furnace reaction.

Since the emissions from the furnace have a major impact upon the potential for water pollution in those plants using wet air pollution control devices, some discussion of such emissions is appropriate. The submerged-arc furnace utilizes carbon reduction of lime, and continuously produces large quantities of hot carbon monoxide. The CO gas venting from the top of the furnace carries fumes from high-temperature regions of the furnace and entrains the finer sized constituents of the mix.

In an open furnace, all CO and other combustibles in the furnace gas burn with induced air at the top of the charge, resulting in a large volume of high-temperature gas. In a covered furnace, most or all of the CO and other gases are withdrawn from the furnace without combustion.

Except for ejected mix particles from the furnace the fume size is generally below two microns. Grain loadings and flowrates are dependent upon the furnace type and hooding. Open submerged-arc furnaces have high flowrates and moderate grain loadings, while closed furnaces have moderate flowrates and generally high grain loadings.

The quantity of emissions from calcium carbide submerged-arc furnaces will vary up to several times the normal emission level over a period of one to three percent of the operating time due to major furnace interruptions and, to a lesser extent, because of normal interruptions. The quantity and type of emissions are also dependent on the presence of fines in the feed. Fine materials promote bridging and non-uniform descent of the charge which may cause gas channels to develop. The collapse of a bridge causes a momentary burst of gases. A porous charge will promote uniform gas distribution and decrease bridging. For some locations economics dictates the use of raw materials with more fines or with more volatile matter than desirable. An example of this is the operation of an open furnace when using petroleum coke as a raw material which has a greater amount of fines than metallurgical coke. Use of an open furnace, however, allows the charge to be 'stoked', thereby breaking up bridges.

Process Description

Calcium oxide and dried metallurgical or petroleum coke are reacted in an electric-arc furnace. The calcium carbide product is tapped as a liquid from the furnace, then air cooled, crushed, screened, packaged and shipped. The process wastes are airborne dusts from the coke drier, screening and packaging operations and the furnace off-gases. The process reaction is:

$$CaO + 3C \rightarrow CaC_2 + CO$$

For every metric ton (1.1 short tons) of carbide produced, about 310 cubic meters (11,000 cubic feet) (15°C) of furnace gas is evolved; the gas analyzes 75-85 percent carbon monoxide, 5-12 percent hydrogen and the remainder is nitrogen, oxygen, carbon dioxide and methane.

There are two basic types of furnaces used for the process--open and covered; the types of coke used, either metallurgical or petroleum, are dependent on furnace type. The open furnaces use petroleum coke for reaction and burn the furnace gases with air at the surface of the charge. These furnaces have a large volume of burned gases which must be handled by an air pollution control system. The covered furnaces use metallurgical coke for reaction and either burn the furnace off-gases in a combustion chamber to eliminate the carbon monoxide or scrub the gases and pipe the carbon monoxide to another operation to recover the fuel value. In all cases, particulate emissions are the major pollution problem from the coke drier, furnace and crushing-screening operations. The coke drying crushing-screening operations dust emissions are handled by bag-filter collectors from which 15 to 50 percent of the dusts can be recycled and the remainder goes to land storage. Four of the five plants are currently operating in this fashion. The fifth plant uses dry collection on the crushing-screening operations and does not operate a coke drier at the present time. When coke drying is practiced at this plant, it is planned to combine the drier vent gases with furnace gases and control the emissions with the existing venturi scrubbers.

The major source of particulate emissions are from the furnace gases. The types of air pollution control equipment used for the furnace gases vary with the type of furnace and whether or not carbon monoxide is recovered.

The best practicable control technology currently available for existing point sources is as follows, by category:

Category I: Covered Furnaces with Wet Air Pollution Control Devices - physical/chemical treatment to reduce suspended solids and harmful pollutants; and

Category II: Other Furnaces - use of dry air pollution devices.

The effluent limitations to be achieved by July 1, 1977 are based on the pollution reduction attainable using those treatment technologies as presently practiced by the average of the best plants in the categories. The 30 day average effluent limitations corresponding to BPCTCA are as follows for Category I:

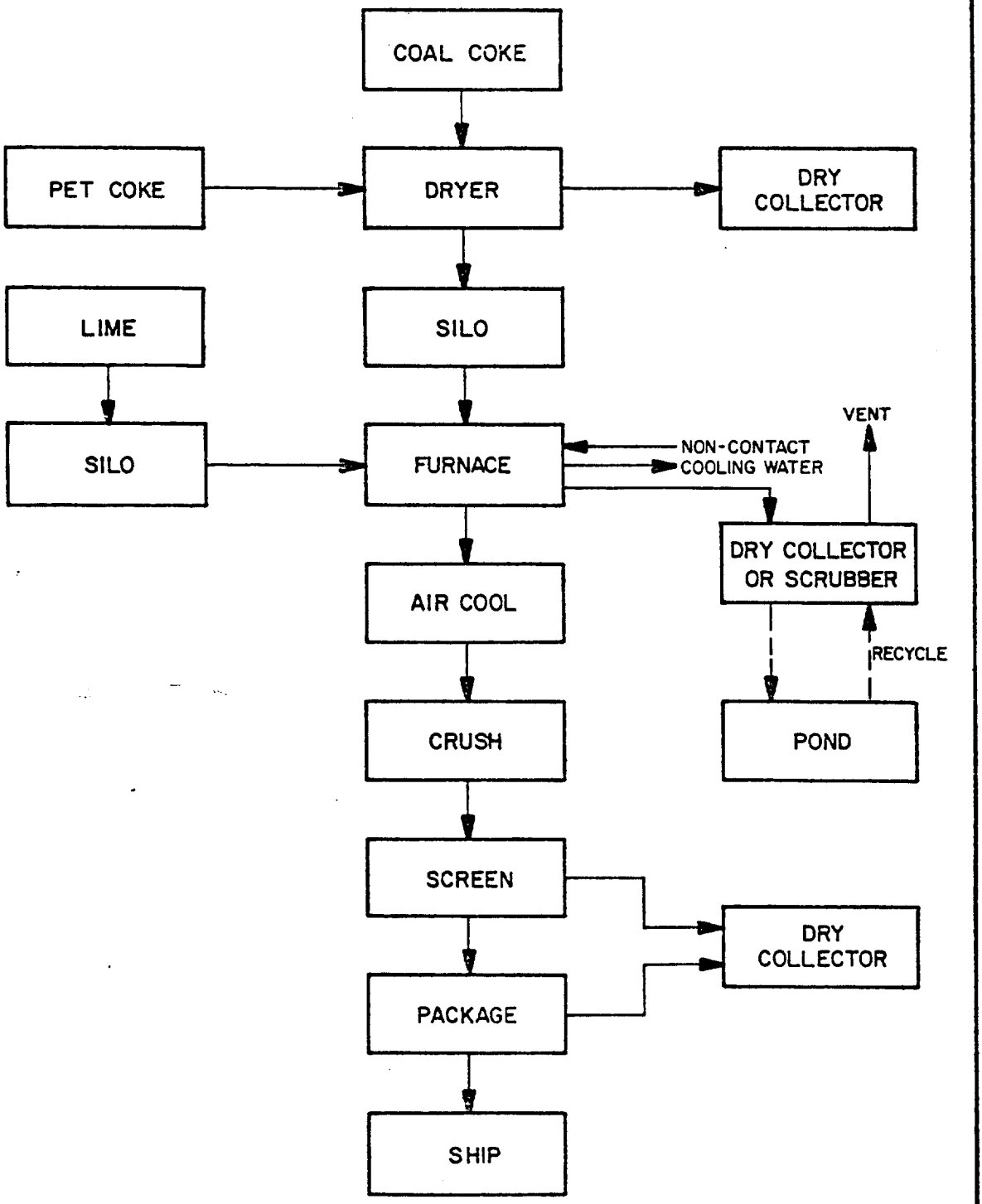

FIGURE 2

OPEN FURNACE CALCIUM CARBIDE PROCESS FLOW DIAGRAM

pollutant parameter	kg/kkg (lb/1000 lb)
suspended solids	0.190
total cyanide	0.0028
pH	6.0-9.0

For Category II, the effluent limitation is no discharge of process wastewater.

The best available technology economically achievable for existing point sources is as follows, by category:

I Scrubber effluent treated by physical/chemical treatment to reduce harmful pollutants followed by clarification and polish filtration to reduce suspended solids; and

II Same as BPCTCA

The effluent limitations to be achieved by July 1, 1983 are based on the pollution reduction attainable using those treatment technologies as presently practiced by the best plants in the categories along with transfer of technology from the inorganic chemicals industry. The 30 day average effluent limitations corresponding to BPCTCA are as follows for Category I:

pollutant parameter	kg/kkg (lb/1000 lb)
suspended solids	0.11
total cyanide	0.0028
pH	6.0-9.0

For Category II, the effluent limitation is no discharge of process wastewater.

The best available demonstrated control technology for new sources is as follows, by category:

I Recirculation of scrubbers wastewater, blowdown treated by physical/chemical treatment to reduce harmful pollutants followed by clarification and polish filtration to reduce suspended solids; and

II Same as BPCTCA

The new source performance standards are based upon the best available demonstrated control technology, process, operating methods, or other

alternatives, which are applicable to new sources. For Category I, the 30 day average effluent limitations for new sources are as follows:

pollutant parameter	kg/kkg (lb/1000 lb)
suspended solids	0.020
total cyanide	0.0005
pH	6.0-9.0

Furnace Type

The differences between open and covered furnaces are significant as they relate to the raw waste loads from the process, particularly the presence or absence of carbon monoxide in the furnace gases. The furnace gas volumes from the two types may vary by a factor of 20 and the water used for wet air pollution control devices varies significantly in terms of hydraulic load due to the differences in gas volumes. In general, covered furnace operations tend to recover and utilize the carbon monoxide in the furnace gas, while open furnace operations burn the carbon monoxide to carbon dioxide in the process.

Raw Materials

Plants in the western part of the U.S. use petroleum coke while those in the east and midwest use metallurgical coke. The use of a specific type of coke dictates the type of furnace used. Operations with petroleum coke are carried out in open furnaces due to the small sized particles characteristic of the material. Use of an open furnace is necessary due to the amount of particle emissions and eruptions from the furnace charge. All furnaces using metallurgical coke are covered.

Wastewater Constituents

With the exception of non-contact cooling water, the only water used in the process is for wet air pollution devices. Suspended solids are the largest single constituent of the process wastewater, and result from removal of particulates from the furnace gases. Cyanides are generated in significant concentrations only in covered furnaces. The wastewater constituents are due to the differences between open and covered furnaces together with wet air pollution control devices.

Water Uses

Water is used in the process for two purposes--cooling water and air pollution control devices. The cooling water is non-contact and can be once-through or recirculated via a cooling tower. Associated with this water there may be water used for water treatment regeneration and cooling tower blowdown. Water is also used for air pollution control equipment for wet scrubbing.

Air Pollution Control Equipment

Air pollution control is the primary pollution problem in this industry. The water pollution problem is created by solving air pollution problems with wet air pollution control devices. When a dry air pollution control system (such as a baghouse) is used, or when emissions are uncontrolled, there is no process wastewater discharge.

Treatment Technology

The only plant in the other carbide furnaces category which utilizes a wet air pollution control device is recycling all wastewater and therefore has no discharge. However, the only plant in the covered furnaces category presently using wet scrubbers does discharge treated scrubber wastewater.

Non-Contact Cooling Water

The non-contact cooling water in the industry is generally of two types. The first type is recycled cooling water which is cooled by cooling towers or spray ponds. The second type is once-through cooling water whose source is generally a river, lake or tidal estuary, and this water is usually returned to the source from which it was taken. The quantity of cooling water for plants in this industry ranges from 40,000 to 80,000 liters per metric ton (9600 to 19,200 gallons per ton), or about 80 percent of the total water usage. At the present time, there is believed to be no excessive thermal load resulting from ferroalloys plants.

Air Scrubber and Contact Wash Water

This water comes under the heading of process water because it comes into direct contact with the raw material, reactants and product when used for wet scrubbing the furnace gases. The water usage varies in volume depending on the type of scrubber employed. A high energy venturi scrubber on an open furnace uses approximately 35,000 liters of water per metric ton

(8,400 gallons per ton). A high energy venturi scrubber on a covered furnace uses as little as 1300 liters of water per metric ton (312 gallons per ton). Another form of contact wash water is that found in use in evaporative coolers, which are sometimes used to cool the burned furnace gas before entering a bag house. All of this water is consumed in evaporation and none would be discharged.

Miscellaneous Water Uses

These water uses vary widely among the plants with general usage for safety showers and eye wash stations, sanitary uses, and storm run-off. The resultant streams are either not contaminated or only slightly contaminated with wastes. The general practice is to discharge such streams without treatment except for sanitary waste. In instances where process residues collect where they can be washed away by storm waters, as for example dusts on the exterior of process buildings, storm run-off can constitute a contamination problem.

Auxiliary Process Water

This water is used in moderate quantities by the typical plant for auxiliary operations such as ion exchange regenerants, and make-up water to cooling towers with a resultant cooling tower blowdown. The water effluents from these operations are generally low in quantity but highly concentrated in waste materials.

The waste effluent from recycled cooling water would be water treatment chemicals and the cooling tower blowdown which generally is discharged with the cooling water. The only waste effluent from once-through cooling water would be water treatment chemicals which are generally discharged with the cooling water. The cooling water tower blowdown may contain phosphates, nitrates, nitrites, sulfates, and chromates.

The water treatment chemicals may consist of alum, hydrated lime, or alkali metal ions (sodium or potassium) arising from ion exchange processes. Regeneration of the ion exchange units is generally accomplished with sodium chloride or sulfuric acid depending upon the type of unit employed.

PROCESS WASTE CHARACTERIZATION

In this section the following information is given:

- -- a short description of the differences in the processes at the plants studied and pertinent flow diagrams;
- -- water consumption data;
- -- specific plant waste effluents found and the post-process treatments used to produce them;
- -- significant differences from plant data where found in verification measurements.

Plants Surveyed

The four producers of calcium carbide constitute 100 percent of the United States production of this chemical.

Raw Waste Loads

The main process reaction generates no by-product raw waste material. Process raw wastes are generated by the coke drier, furnace gas scrubbing, and packaging operations. The average values are given for the two open furnace plants below:

Waste Material	Plant 454 kg/kkg (lb/1000 lb)	Plant 455 kg/kkg (lb/1000 lb)
coke dust	none	50
furnace stack dust	135	85
packing dust	unknown	10
hydrated lime and coke	112.5	---

Plant 454 does not operate a coke drier but does landfill some coke spillage along with off grade calcium carbide after "airslaking" to hydrated lime. Plant 455 recycles up to 50 percent of the fines to the furnace and landfills the remainder.

The average raw waste loads from the covered furnace plants are given below:

Waste Material	Plant 451 kg/ (lb/ kkg 1000 lb)	Plant 452 kg/ (lb/ kkg 1000 lb)	Plant 453 kg/ (lb/ kkg 100 lb)
coke dust	20	30.3	3.9
furnace stack dust	23	28	37.5
packing dust	unknown	unknown	31.
cyanide (total)	0.203	none	none

The packing dusts from these three plants are recycled to the operation and go out with the product.

Wet Scrubber Raw Waste Loads

Samples of scrubber raw wastes were analyzed by the contractor with the following results:

Constituent	Plant 451 concentration (mg/l)	Calculated kg/ (lb/ kkg 1000 lb)
TSS	3750	28.2
TDS	302	2.3
Cyanide (total)	27	0.203
Iron	14.2	0.11
Silica (SiO_2)	2.9	0.02
Calcium	397	2.98
Flow (gal/ton)	1800	
	Plant 454	
TSS	4740	166.
TDS	2640	92.5
Cyanide	--	---
Iron	22.7	0.80
Silica (SiO_2)	0.24	0.0084
Calcium	2570	90.1
Flow (gal.ton)	8400	

Air Pollution Control Equipment

The following is a summary of the types of air pollution equipment found in use or planned for furnace off-gas emission control. The use of wet scrubbers is more prevalent with covered furnaces than with open.

Open Furnace Operation

Furnace Gas Air Pollution Equipment	Plant 455	Plant 454
dry bag filters	installed and operating	none in use but considering for future
venturi high energy wet scrubber	none	presently in use

Covered Furnace Operation

Furnace Gas Air Pollution Equipment	Plant 451	Plant 452	Plant 453
venturi wet scrubber	none	planned installation 1974	none
evaporative cooler and dry bag filter	none	presently in use	planned installation 1974
disintegrator scrubbers	presently in use	none	none

Plant 453 currently vents and flares all furnace gases.

The Airco plant at Calvert City, Kentucky which is currently not operating, is a covered furnace operation which presently uses no air pollution control equipment, but Airco sources indicate that a venturi wet scrubber installation is projected for that plant when it comes back on stream.

The venturi high energy scurbbers have been the most recent wet scrubbers to be installed in the calcium carbide plants. A high energy venturi scrubber on an open furnace uses approximately 35,000 liters of water per metric ton (8,400 gallons per ton). The same installation on a covered furnace uses as little as 1,300 liters of water per metric ton (312 gallons per ton). Most venturi designs allow recirculation of scrubbing solutions, such that the water consumption is reduced to that evaporated plus that contained in the blowdown of the concentrated solids stream.

A disintegrator type of scrubber is used by one of the plants surveyed. This type of scrubber has the advantage of producing only a slight pressure

head in the off-gas line, but capacity limitations and large water and power consumption make it uneconomical for most new furnace installations.

The use of an evaporative cooler and dry bag collector has definite advantages in that there is no waste water effluent from the system. The water sprays used to cool the gas are totally evaporated. The main disadvantage of this system is that the carbon monoxide must be burned before entering the system.

Plant Water Use

Water is used in these plants for non-contact cooling and gas scrubbing. The various modes of water consumption at the plants are:

Open Furnace Operation

	liters/metric ton (gal/ton)	
Consumption	Plant 454	Plant 455
non-contact cooling	41,700 (10,000)	49,900 (12,000)
scrubbers	35,000 (8,400)	none

Plant 455 recirculates water through a cooling tower, while plant 454 uses once through cooling water.

Covered Furnace Operation

Consumption	Plant 451	Plant 452	Plant 453
non-contact cooling	40,000 (9,600)	54,600 (13,100)	80,000 (19,000)
scrubbers	7,500 (1,800)		

Plants 452 and 453 recirculate water through a cooling tower, while plant 451 uses cooling water for other operations in the complex before discharging. Plant 452 is currently installing a wet scrubber which will have a planned water consumption of 1300 liters per metric ton (312 gal/ton).

Wastewater Treatment

Plant 455 has no process waste water due to dry collection methods. Plant 454 totally recycles the venturi scrubber water through two settling ponds. This system has been in operation for over two years. Plant 452 has no process waste water because it is presently cleaning only burned gases by dry methods. Plant 452 is currently installing a wet scrubber and

is planning to treat the blowdown from the recycled scrubber water by clarification and neutralization. Plant 453 has no scrubber waste water, since no gases are cleaned. Plant 451 is a ferroalloy complex which treats its wastewater in a treatment system using chlorination, clarification, and neutralization.

Plant Effluents

Plants 452, 453, 454, and 455 presently do not discharge process waste water. They do discharge non-contact cooling water and water treatment streams. Plant 454, using total recycle of the venturi scrubber water, indicated some discharge of pond water during periods of unusual rain fall. Plant 452 is planning to discharge the blowdown of its proposed scrubber along with cooling tower blowdown to a municipal sewer.

The average combined discharges of plant 451 (ferroalloy complex) are given as follows:

Wastewater Constituents	Concentration (mg/l)		
	outfall 001	outfall 002	intake
TSS	24	25	29
TDS	255	324	247
BOD	none	none	none
COD	15	18	12
pH	8.3	8.3	8.3
Cyanide	0.065	0.005	0.005
Phenols	0.100	0.050	0.050
Hardness (total)	139	147	130
Chloride	47	90	36
Fluoride	0.70	0.52	0.22
Sulfate	26	45	22
Iron	2.331	2.565	1.863
Copper	0.090	0.090	0.090
Chromium	0.030	0.030	0.030
Manganese	0.176	0.166	0.166
Arsenic	0.010	0.010	0.010
Mercury	0.001	0.001	0.001
Lead	0.005	0.005	0.005

These discharges, on a gross basis, are from a combined series of plant operations and are presently diluted with cooling water prior to discharge.

5.3 ELECTROLYTIC PROCESSES

EPA-440/1-75-038a

Electrolytic processes are used to produce high purity manganese and chromium. At the time the data in this Section were published, there were four electrolytic operations: Kerr-McGee Chemical Corp.; Prairie Chemical Co.; Foote Mineral Co., New Johnsonville, Tennessee; and Union Carbide Corp., Ferroalloys Division, Marietta, Ohio.

Electrolytic Manganese

Manganese may be produced by the electrolysis of an electrolyte extracted from manganese ore or manganese-bearing ferroalloy slag. Manganese ores contain close to 50 percent manganese. Slag from an electric furnace producing ferromanganese normally contains 10 percent manganese but this percentage can be increased by adjusting the furnace operating conditions. Both have proven to be suitable raw materials for the electrolytic process. A flow sheet of the process for the preparation of electrolytic manganese is given in Figure 1. The process can be considered primarily a four-step operation: 1) roasting the ore, 2) leaching the roasted ore, 3) purifying the leach liquor, and 4) electrolysis.

(1) Roasting. The ore is roasted to convert the manganese oxides present to MnO, while the iron is left as Fe_3O_4 which is less soluble than the lower oxides of iron in the sulfuric acid used for leaching.

(2) Leaching. The ground and roasted ore is leached with recycled anolyte from the electrolytic cell, which is principally ammonium sulfate with some sulfuric acid and manganous sulfate. The concentration of the leach is adjusted by addition of ammonium sulfate and sulfuric acid. Overall extraction of manganese from the roasted ore is 98-99 percent. On neutralization, iron and aluminum hydroxides are precipitated and take down with them most of the molybdenum, arsenic, and silica. The solution is then clarified and filtered.

(3) Purifying the leach liquor. The neutral leach liquor contains some iron, arsenic, copper, zinc, lead, nickel, cobalt, and molybdenum, which must be removed before electrolysis. Removal is accomplished by treatment with hydrogen sulfide gas or ammonium sulfide and filtration of

Figure 1.
ELECTROLYTIC MANGANESE FLOWSHEET

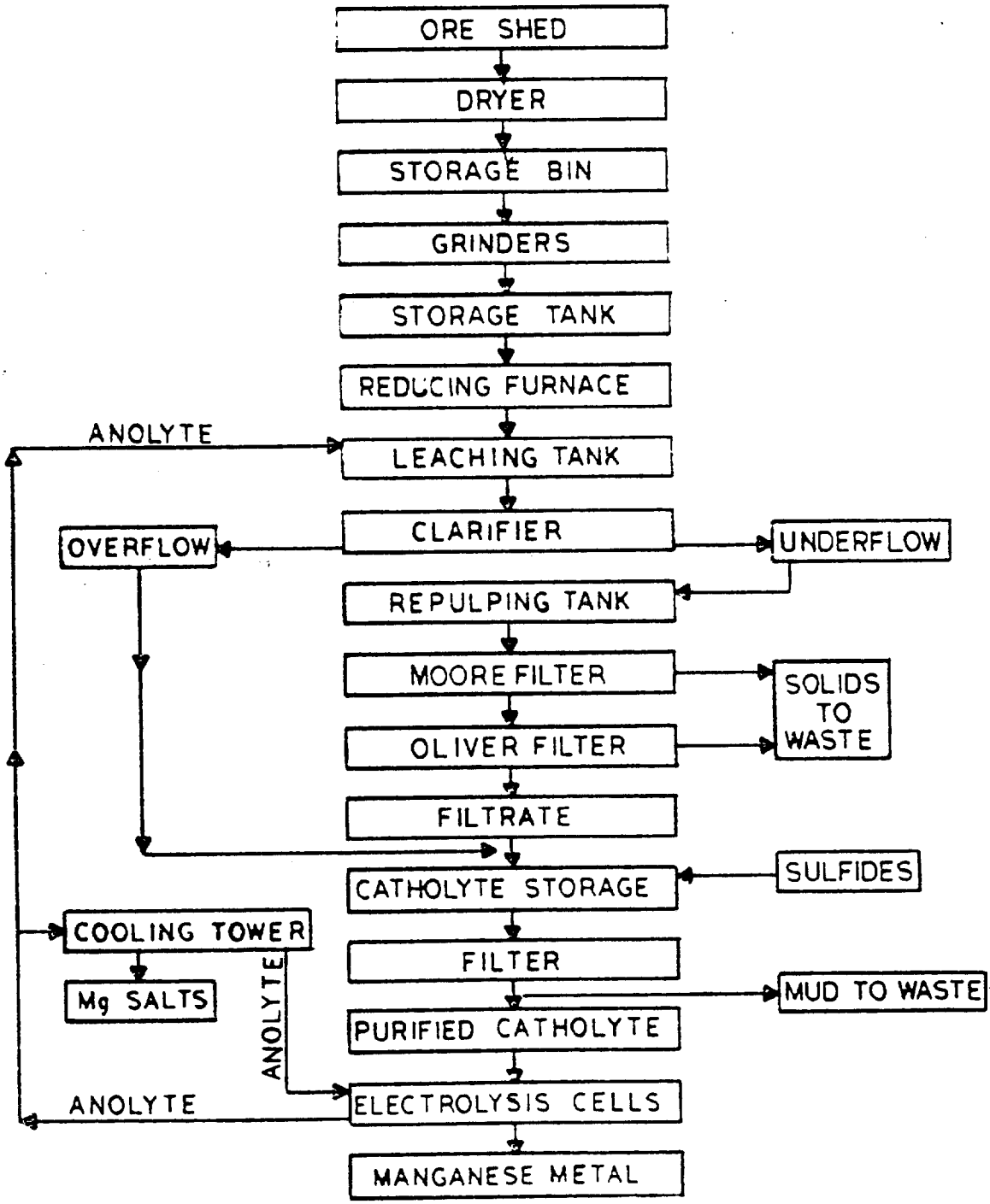

the liquor to remove the sulfides. A small amount of manganese is lost in this step.

(4) Electrolysis. The purified solution for electrolysis enters the cathode compartment, where manganese is plated on the cathode, flows through the diaphragm into the anode compartment from which it is discharged. It may then be recycled for leaching of the ore or slag.

Manganese Dioxide

One process for the production of manganese dioxide is the roasting of pyrolusite ore. It may also be prepared synthetically by electrolysis of manganese sulfate in a sulfuric acid solution. Only the latter method will be considered further herein.

The ore is crushed, ground, mixed with Bunker 'C' oil and roasted, which converts higher oxides to soluble MnO. In a leaching tank, spent electrolyte solution and make-up sulfuric acid leach the roasted ore. Insoluble sludge separates out from the leach solution on filters. The crude leach solution is next treated with barium sulfide to remove cobalt and nickel impurities as insoluble sulfides. CaO is added for neutralization and the sulfide sludge is removed.

Part of the sludge recycles back to the sulfide treatment tank to recover any manganese that may have precipitated with the impurities. Iron is removed (along with sulfur, arsenic, and organics) by air oxidation and the iron sludge is filtered out. The filtrate is used as the feed solution for the electrolytic cells.

MnO_2 deposits on anodes in the electrolytic cells, and after separation from the anodes, the MnO_2 is ground and the fine material is washed in a thickening tank, filtered and dried. The manganese dioxide is then ready for packing and shipment.

Electrolytic Chromium

The most readily available and cheapest source for electrolytic chromium, free from many extraneous elements, is high carbon ferrochromium produced in the electric furnace. This alloy is readily soluble in sulfuric acid.

Ferrochromium is fed to a leach tank where it is dissolved in a mixture of reduced anolyte, chromium alum mother liquor and make-up sulfuric acid.

During the reaction a large volume of hydrogen is liberated and a ventilating system, necessary to maintain hydrogen concentration below explosive limits, exhausts the gases to a scrubber.

After leaching, the slurry is fed into a holding tank where cold mother liquor, coming from the ferrous ammonium sulfate crystallization, is added to cool the batch. Undissolved solids are separated from the solution and this residue is washed with water and discarded. The solution resulting from washing the leach residue is used to dissolve the crude iron sulfate. Ammonium sulfate is added to this solution and ferrous ammonium sulfate crystals are then separated on a vacuum filter and dried in a rotary drier. This can be sold as a fertilizer for its ammonia content. The filtrate is advanced to a conditioning tank, where the chromium is converted to a non-alum-forming modification by holding at elevated temperatures for several hours. The conditioned liquor is then pumped into a crystallizer and the temperature is reduced. Crude iron sulfate crystals which are formed during this cooling period are separated from the mother liquor on a vacuum filter.

The conditioned liquor is clarified and sent to the aging circuit. About 80 percent of the chromium is stripped as alum from the aging circuit. The crystal slurry is filtered and washed; the filtrate is pumped to the leach circuit and the washed chromium-alum crystals are dissolved in hot water to produce cell feed. Cell feed is supplied continuously to the operating cells where it is mixed with a stream of circulating catholyte. Excess catholyte is withdrawn from the circulating stream and pumped back into the aging circuit. Anolyte is treated with sulfur dioxide to reduce the chromic acid to trivalent chromium and then returned to the start of the ferrochomium leaching circuit. The electrolytic cells are covered and strongly ventilated to reduce the ambient hydrogen and hexavalent chromium concentrations in the cell room.

Cathodes are withdrawn from the cells periodically and the plated metal is stripped, crushed and washed with hot water in a classifier to remove soluble salts.

The process flow diagram for the production of electrolytic chromium is shown in Figure 2.

Figure 2.
FLOW SHEET FOR ELECTROLYTIC CHROMIUM

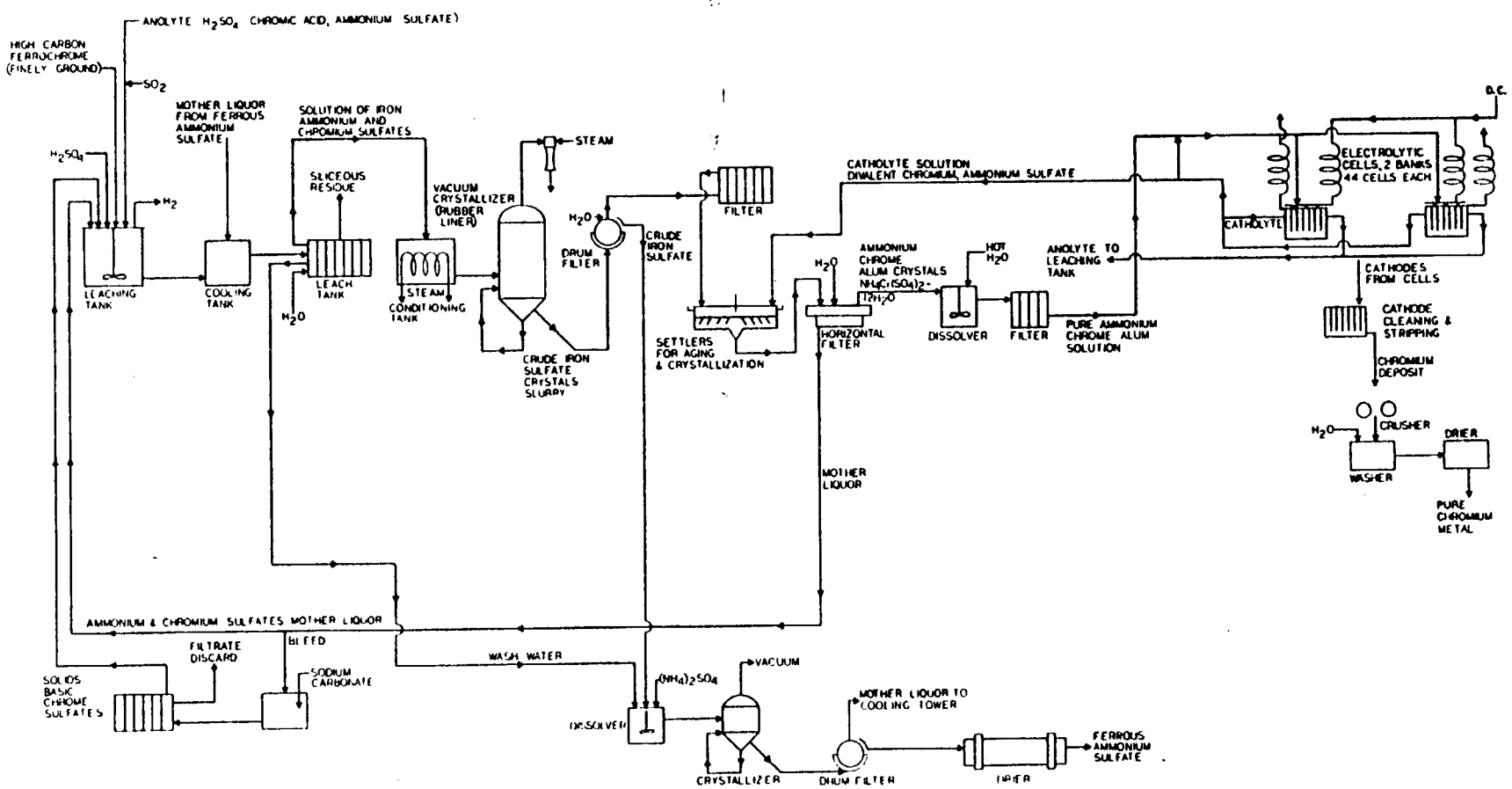

WASTE CHARACTERIZATION

Water is used extensively in the electrolytic ferroalloys industry--for preparing the electrolyte, washing the plated metal, filter residue transport, non-contact cooling, etc.

Electrolytic Manganese

There are three plants presently producing electrolytic manganese. All are approximately equal in size at about 9000 kkg (10,000 tons) annual production. Both of the older plants hydraulically transport filter residues from the electrolyte preparation processes to tailings ponds. Plant B collects and hauls the filter muds. Plants B and C use ore as their feedstock, while Plant A uses slag produced during the smelting of ferromanganese in electric furnaces.

In the electrolytic manganese industry, the waste waters may be classed as either "strong" or "weak." The "strong" wastewaters contain some electrolyte and may also carry filter residues from electrolyte preparation. As a result, they may contain several thousand mg/l of suspended solids, manganese, ammonia and sulfate.

The "weak" wastewaters, however, result primarily from washdowns and other miscellaneous uses. Compared to the strong wastewaters, they are very much lower in concentration. A comparison of the strong and weak wastewaters is found below for Plants A and B.

	Strong Wastewater		Weak Wastewater	
	Plant A mg/l	Plant B mg/l	Plant A mg/l	Plant B mg/l
Suspended Solids	55,300	85	144	9
Manganese	6,700	1,061	128	21.7
Ammonia-N	4,208	3,733	148	16
Sulfate	35,524	7,100	900	73
pH	7.3	2.7	5.1	7.3
Flow (gal/ton)	3820	6000	32,500	6400

The raw waste loads for these plants are as follows, in kg/kkg (lb/1000 lb):

	Plant A			Plant B		
	'Strong'	'Weak'	Total	'Strong'	'Weak'	Total
Suspended Solids	881.1	19.5	900.6	2.13	.24	2.37
Manganese	106.8	17.4	124.2	26.55	.58	27.13
Ammonia-N	67.0	20.1	87.1	93.42	.43	93.83
Sulfate	566.0	122.0	688.0	177.68	1.95	179.63

Wastewater treatment at all three plants depends highly on lagoons. Plant A discharges the strong manganese wastes with a lime slurry for neutralization into a large 30 ha (70 ac) settling lagoon. The weak wastewater, after mixing with other plant wastewaters, is also discharged into this lagoon.

Plant B discharges the strong wastewater to a large pond, where after settling and evaporation by sprays, the wastewater is recycled to the plant for use as primary washwater and other miscellaneous uses. The weak wastewaters are usually discharged directly to a stream, although a dissolved solids monitor may divert the discharge to the evaporation pond, should the dissolved solids level exceed a preset limit.

Plant C diverts their weak wastewaters into a pond. These consist mostly of washwaters from the manganese production. Prior to the pond, they are mixed with wastes from the production of other materials at the plant. The strong wastewaters (also mixed with other plant wastes) flow to another tailings pond, where after some aeration, they enter an oxidation pond, after which they join the weak wastewater mixture and are discharged.

Figures 3, 4 and 5 show the wastewater flow diagrams at Plant A, B and C.

Manganese Dioxide

The raw waste from the production of manganese dioxide at Plant A is as follows:

Figure 3
Plant A
Water and Wastewater Systems

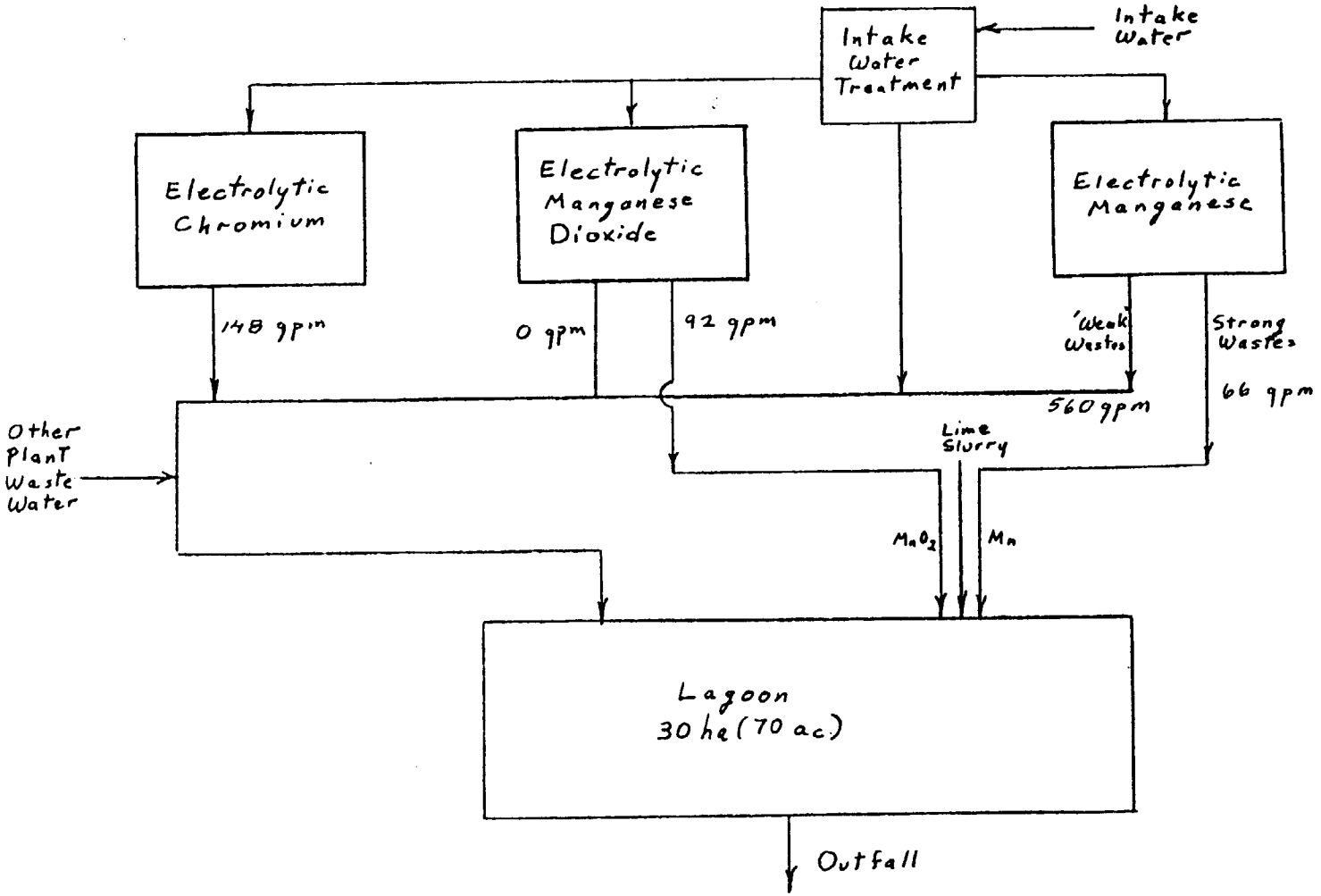

Figure 9
Plant B
Water and Wastewater Systems

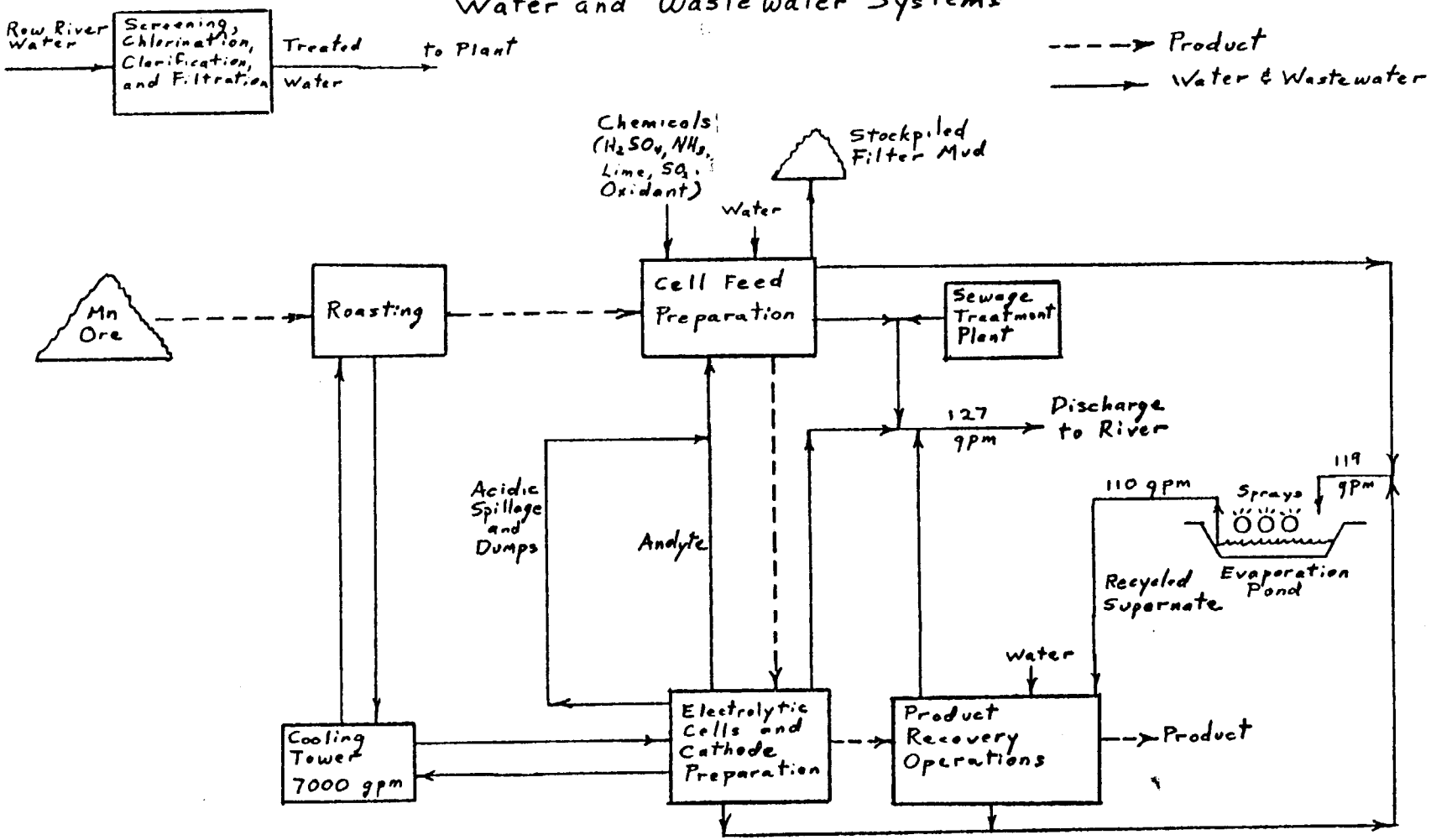

Figure 5

Plant C
Water and Wastewater Systems

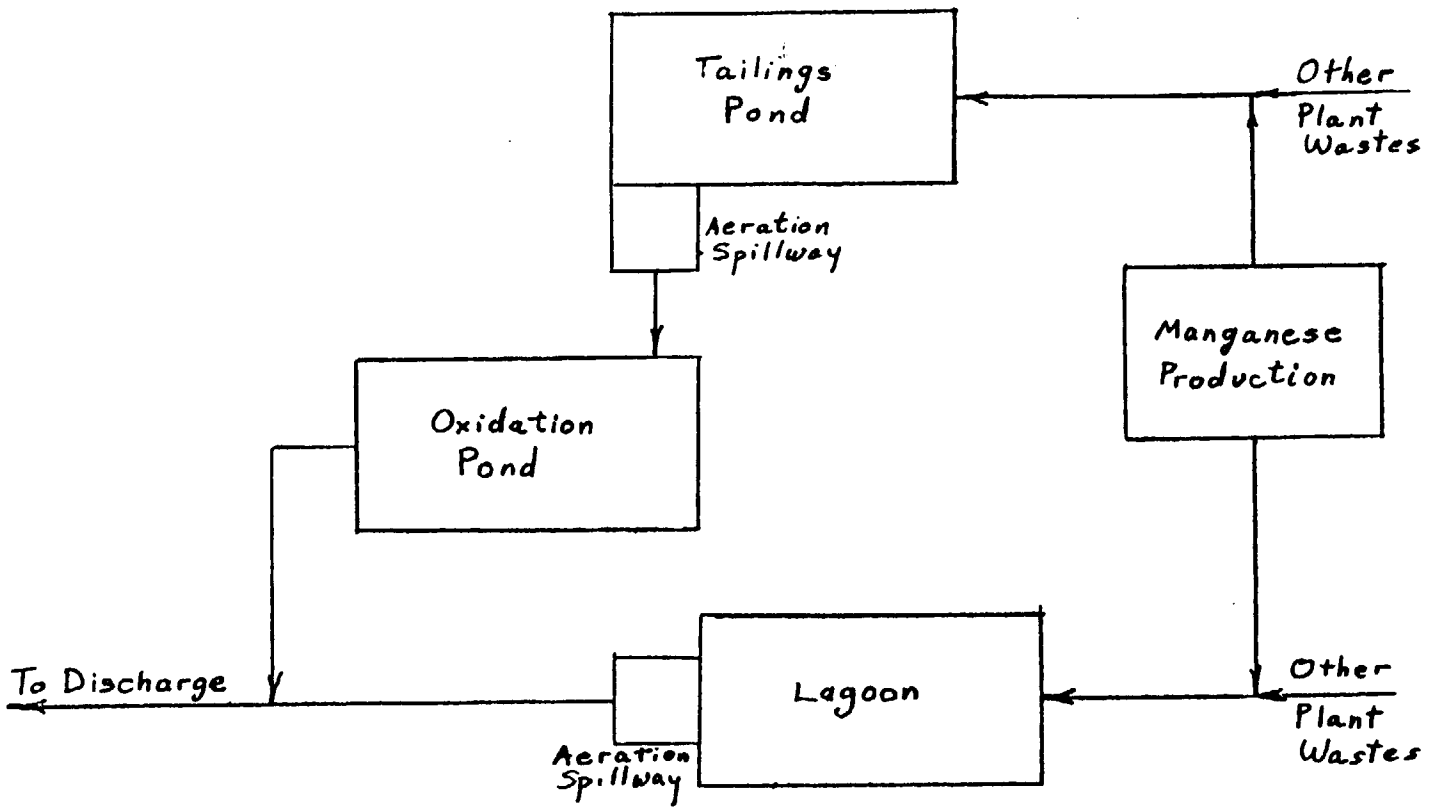

	Concentration (mg/l)	Raw Waste Load kg/kkg (lb/1000 lb)
Suspended Solids	22,505	770.5
Manganese	3,158	108.3
Ammonia-N	75	2.7
pH (units)	4.1	
Flow (gal/ton)		8207

Treatment of the wastewater is identical to that for the strong wastewaters from electrolytic manganese production at Plant A.

Electrolytic Chromium

Plant A produces this commodity, as does Plant D. The raw waste from chromium production at Plant A is as follows:

	Concentration (mg/l)	Raw Waste Load kg/kkg (lb/1000 lb)
Suspended Solids	290	30.5
Chromium	1764	186.1
Iron	4492	473.8
Manganese	52	5.5
Ammonia-N	1076	113.5
pH (units)	2.9	
Flow (gal/ton)		25,285

Plant A crystallizes and sells ferrous ammonium sulfate to a fertilizer company. During the times that the FAS cannot be sold, it is not crystallized and becomes part of the raw waste. The data reported above reflect the latter condition. Treatment at Plant A for this waste stream is identical to that for the weak electrolytic manganese wastewater.

The conventional process at Plant D is altered in that the solution from the leach filter goes first to the aging and crystallizing settlers through a cooler then to the steam conditioning tank and thence through the remainder of the process; additionally, some of the mother liquor from the horizontal filter can be returned to the steam conditioning tank or to the leaching tank. This modification reportedly produces a better, drier crude

ferrous ammonium sulfate which can be used as-is. Residue from the leach filter is trucked to storage as a damp sludge, condensate from the vacuum crystallizer is reused, ammonium sulfate is sold or given away in the crude without recrystallization, and the filter effluents are minimal. The wastewater effluent from Plant D was expected to be .06 l/sec or less (1 gpm or less) due mainly to spills and washups. All such wastewaters must be pumped from the plant sumps. Treatment is lime neutralization followed by 3 settling basins in series. The batch discharge is slightly larger than expected and is equivalent to 6245 l/kkg (1500 gal/ton) of product. Plant C reports only one batch discharge during the period from mid-March to mid-June of this year. Additionally, it is estimated that a thousand gallons per day was lost by solar evaporation. It is hoped that experimental work by a fertilizer company will result in the crude ferrous ammonium sulfate being salable as a micro-nutrient for plants at $15 - $20 per kkg. This material is reported to be an excellent fertilizer for roses, rhododendrons and azaleas. However, due to the relatively small amount produced, the plant feels that independent marketing would be very difficult and expensive.

Treated Wastes

Because the electrolytic waste at Plant A and C are extensively commingled with other plant wastes, no absolute value for the treated wastes at these plants can be given. Analytical data for the lagoon discharge at Plant A are as follows, in mg/l:

Suspended solids	15
Manganese	91
Chromium	0.08
pH	7.2

The treated discharge at Plant B is simply the discharge of the weak wastewater, as shown below.

Parameter	Concentration (mg/l)	Waste Load (kg/kkg) (lg/1000 lb)
Suspended Solids	9	0.24
Manganese	21.7	0.58
Ammonia-N	16	0.43
pH	7.3	

5.4 INFORMATION RELATING TO POLYNUCLEAR AROMATIC ORGANIC EMISSIONS

Memoranda in this section were obtained from EPA-IERL files. Some samples taken during EPA's background work to establish Standards of Performance were also analyzed in different laboratories for organic content. Unfortunately the samples were taken by EPA Method 5 rather than the source assessment sampling system and were analyzed, in some cases, by techniques that may be inaccurate by an order of magnitude or more.

Ferroalloy Sample Analyses - Preliminary Results February 5, 1975

R. C. McCrillis
Mettallurgical Processes Section, CSL

Don Goodwin, Director
Emission Standards & Engineering Division
THROUGH: Director, Control Systems Laboratory
Chief, Gas Cleaning & Metallurgical Processes Branch
Chief, Metallurgical Processes Section

As a result of Dr. Burchard's memo to you of January 29, 1974 and subsequent meetings involving members of your staff and the undersigned, a number of samples from emission tests on ferroalloy furnaces were transferred from ESED to CSL. The purpose of this transfer was to provide CSL with samples of ferroalloy furnace emissions for detailed physical and chemical analysis without the expense of mounting an extensive field sampling program. The purpose of this memo is to report to you the results of analyses performed thus far. You should realize that these are preliminary results subject to further verification. I did not want to delay this memo any longer since these data may be significant to ESED's current efforts to establish Standards of Performance for the ferroalloy industry.

A complete inventory of all the samples received thus far from your staff is attached as Table 1. The notation in the left hand margin (CSL-1, -2, etc) indicates the identifying number given to the composited samples. All results will refer to these composited sample numbers.

The initial group of samples selected for analysis contained CSL-2, 4, 5, 9, and 11. The Contractor (Battelle) was requested to analyze the composited samples by spark source mass spectrometry (SSMS) for metallic elements and by a combination of liquid chromatograph and spectrofluorimetry to screen for polynuclear aromatic hydrocarbons (PNA's).

I subsequently agreed with Battelle's suggestion that metal analyses were to be made on each of the composited probe, filter, and impinger samples for each run. The SSMS data is presented as Table 2.

For the hydrocarbon analysis, the probe work, filter catch, and impinger solutions from each run were combined into one composite sample in methylene chloride and subjected to quantitative liquid chromatography on an alumina

column. The result indicates the general order of magnitude concentration of PNA's present. The spectrofluorimeter was calibrated for benz(a)pyrene by means of several determinations of 20 to 1200 ng of pure benz(a)pyrene using an identical procedure to that employed for the unknown samples. Using this calibration, the total PNA's in the five samples were estimated as shown in Table 3 while Table 4 gives the sample weight data utilized in making the analytical calculations. Note that this screening technique is designed only to indicate the presence (or absence) of PNA's and a rough order of magnitude estimate of the quantity.

Comparison of the metal analyses with those presented in the report "Engineering and Cost Study of the Ferroalloy Industry" for similar samples from the same furnaces indicated general agreement. Therefore, no further metal analyses were contemplated. As you can see, however, the hydrocarbon screening analysis indicated a significant concentration of PNA's in CSL-11. It was, therefore, decided to perform a more detailed hydrocarbon analysis on this one sample only.

In accordance with this decision, Battelle was instructed to analyze CSL-11 by gas chromatographic-mass spectrographic (GC-MS) techniques. Simultaneously the Bureau of Mines was requested to analyze a portion of the sample by high resolution mass spectrometer (HRMS).

The results of these analyses are presented in Table 5 (GC-MS) and 6 & 7 (HRMS). As you can see, these data confirm the presence of a substantial concentration of PNA's including 8 of the 9 precise masses associated with the 14 PNA's having 2-, 3-, and 4-star ratings in the NAS 1972 Handbook.

These results dictated the need for analysis of additional emission samples from closed furnaces. Accordingly, CSL-7, -12, and -13 were selected for analysis. Preliminary results, from the initial hydrocarbon screening, should be available in a week or so. If the preliminary results are positive, then GC-MS and HRMS analyses will be ordered, in which case final results should be available by mid-April.

CSL-11 was obtained downstream of the scrubber (but upstream of the flare) serving a closed furnace while the other four were samples of emissions from open furnaces. In every case known the off-gases from closed furnaces are either flared or used as a fuel elsewhere in the plant. The exact effect of this combustion process on the PNA's is unknown. Since none of the

samples from open furnaces showed such high levels of PNA's, one would expect that burning the CO rich gas, such as occurs above an open furnace, would eliminate most of these compounds. It should be recognized, however, that even though the concentrations of these carcinogenic compounds may be reduced to 10-30 ppm by combusting the CO as in the case of the open furnaces, this amount might still prove to be objectionable.

The sample coding is as follows:

Code	Sample No.		Type Furnace
CSL-1	72-001	101 through 108	Open
CSL-2	72-001	114 through 118 and 178-187	Open
CSL-3	72-001	1001 through 1011	Open
CSL-4	72-001	1012 through 1617	Open
CSL-5	72-001	223 through 227 and 233 through 247	Semi-sealed
CSL-6	72-001	267 through 271 and 276 through 280	Semi-sealed
CSL-7	72-003	009 through 119 and 127 through 131	Semi-sealed
CSL-8	72-001	300 through 324 and 330 through 339	Semi-sealed
CSL-9	72-001	345 through 349 355 through 359 365 through 369	Semi-sealed
CSL-10	72-001	340 through 344 350 through 354 360 through 364	Semi-sealed
CSL-11	72-003	152 through 176	Sealed
CSL-12	72-003	207 through 211	Sealed
CSL-13	72-003	152 through 176 182 through 196	Sealed

TABLE 1

INVENTORY FERROALLOY SAMPLES

Sample No.	Test No.	Date	Type Sample	Beaker/ Filter No.	Mass~mg	Sampling Location	Furnace	Comments
72-001-101	ABD-1	1/17/72	probe wash	1	525.6	Baghouse inlet	F	Product: SILICON METAL
102			filter	39	1818.3	"		Samples taken in common duct
103			filter	35	1095.6	"		serving 3 baghouses in parallel
104			filter	34	1069.6	"		
105			filter	38	528.1	"		
106			imp. wash	17	23.9	"		
107			imp. H_2O	61	26.9	"		
108			C-E extract.	65	3.3	"		
109	AEE-1	1/17/72	probe wash	5	31.9	Baghouse outlet		3 baghouses in parallel. Samples
110			filter	17	5.2	"		taken in roof monitors of one
111			imp. wash	21	16.5	"		baghouse.
112			H_2O	49	5.2	"		
113			C-E extract.	37	.8	"		
114	ECE-1	1/17/72	probe wash	11	43.9	Baghouse outlet		
115			filter	23	15.9	"		
116			imp. wash	27	16.9	"		
117			H_2O	55	2.7	"		
118			C-E extract.	43	-0-	"		
125	AWE-1	1/17/72	filter	26		Baghouse outlet		
130	ABD-2	1/18/72	filter	28	926.5	Baghouse inlet		Samples taken in common duct
131			filter	36	650.4	"		serving 3 baghouses in parallel
132			filter	29	522.1	"		
133			filter	25	983.4	"		
143	ECE-2	1/18/72	filter	24	25.8	Baghouse inlet		3 baghouses in parallel. Samples
145			H_2O	56	22.8	"		taken in roof monitors of one
146			C-E extract.	44	-0-	"		baghouse.
147	WCE-2	1/18/72	probe wash	9	21.7	Baghouse inlet		3 baghouses in parallel. Samples
148			filter	21	25.9	"		taken in roof monitors in one
149			imp. wash	25	17.7	"		baghouse.
150			H_2O	53	20.4	"		
151			C-E extract.	41	-0-	"		

INVENTORY FERROALLOY SAMPLES

Sample No.	Test No.	Date	Type Sample	Beaker/ Filter No.	Mass-mg	Sampling Location	Furnace	Comments
72-001-156	AWE-2	1/18/72	C-E extract.	47	-0-	Baghouse outlet	F	3 baghouses in parallel. Samples taken in roof monitors of one baghouse.
158	ABD-3	1/20/72	filter	31	725.6	Baghouse inlet		Samples taken in common duct serving 3 baghouses in parallel.
159			filter	27	1196.4	"		
160			filter	33	1117.3	"		
161			filter	26	932.3	"		
162			imp. wash	19	21.9	"		
163			H_2O	63	-0-	"		
164			C-E extract.	67	3.7	"		
174	AEE-3	1/20/72	filter	19	30.8	Baghouse outlet		3 baghouses in parallel. Samples taken in roof monitors of one baghouse.
175			imp. wash	23	16.5	"		
176			H_2O	51	5.0	"		
177			C-E extract.	39	0.1	"		
178	ECE-3	1/20/72	probe wash	13	14.0	Baghouse outlet		3 baghouses in parallel. Samples taken in roof monitors of one baghouse.
179			filter	25	18.4	"		
180			imp. wash	29	18.3	"		
181			H_2O	57	55.7	"		
182			C-E extract.	45	2.7	"		
183	WCE-3	1/20/72	probe wash	10	10.5	Baghouse outlet		3 baghouses in parallel. Samples taken in roof monitors of one baghouse.
184			filter	22	18.9	"		
185			imp. wash	26	19.1	"		
186			H_2O	54	18.0	"		
187			C-E extract.	42	-0-	"		
193	-		filter blank					
195	-		C-E blank					

INVENTORY FERROALLOY SAMPLES

Sample No.	Test No.	Date	Type Sample	Beaker/ Filter No.	Mass-mg	Sampling Location	Furnace	Comments
1001	CSD-1	2/1/72	probe wash	121	2106.6	Scrubber inlet	G	PRODUCT: SiMn - 18.5% Si, 1.5%
1002			filter	204	2239.6			C, 66.0%. Some of loose particu-
1003			filter	205	1906.5			late lost in transit
1004			filter	203	2626.8			" " " " " "
1005			filter	202	752.7			" " " " " "
1006			imp. H_2O	137	98.4			
1007			C-E extract	136	28.0			
1008			acetone after	122	27.8			
1009			sil. gel	NA				
1010			H_2O blank	131	-0-			
1011			acetone blank	127	0.3			
1012	CSE-1	2/1/72	probe wash	115	11.9	Scrubber exhaust		
1013			filter	090	109.5			
1014			imp. H_2O	130	12.1			
1015			C-E extract.	129	5.1			
1016			acetone after	116	8.6			
1617			sil. gel	NA				

INVENTORY FERROALLOY SAMPLES

Sample No.	Test No.	Date	Type Sample	Beaker/ Filter No.	Mass-mg	Sampling Location	Furnace	Comments
72-001-197	SHE-1	2/15/72	probe wash	2	28.7	South duct from	H	PRODUCT: 50% FeSi
198	"	"	filter	1	238.4	fugitive fume		Fumes vented directly
199	"	"	imp. wash	36	9.1	hood.		to atmosphere.
200	"	"	imp. H_2O	116	4.8			
201	"	"	C-E extract.	81	7.0			
202	NHE-1	2/15/72	probe wash	9	67.9	North duct from		
203	"	"	filter	9	356.1	fugitive fume		
204	"	"	imp. wash	43	8.9	hood.		
205	"	"	imp. water	123	25.9			
206	"	"	C-E extract.	88	2.7			
207	SHE-2	2/16/72	probe wash	3	293.0	South duct from		
208	"	"	filter	3	533.6	fugitive fume		
209	"	"	filter	2	294.9	hood.		
210	"	"	imp. wash	37	16.5			
211	"	"	imp. H_2O	117	4.7			
212	"	"	C-E extract.	82	26.9			
213	CHE-2	2/16/72	probe wash	6	76.6	Center duct from		
214	"	"	filter	6	889.7	fugitive fume		
215	"	"	imp. wash	40	8.8	hood.		
216	"	"	imp. H_2O	121	4.9			
217	"	"	C-E extract.	85	6.2			
218	NHE-2	2/16/72	probe wash	10	235.5	North duct from		
219	"	"	filter	10	1257.9	fugitive fume		
220	"	"	imp. wash	44	17.0	hood.		
221	"	"	imp. H_2O	124	4.8			
222	"	"	C-E extract.	89	1.2			
223	SHE-3	2/16/72	probe wash	4	202.2	South duct from		
224	"	"	filter	4	1660.1	fugitive fume		
225	"	"	imp. wash	38	9.2	hood.		
226	"	"	imp. H_2O	118	5.0			
227	"	"	C-E extract.	83	2.6			

INVENTORY FERROALLOY SAMPLES

Sample No.	Test No.	Date	Type Sample	Beaker/ Filter No.	Mass~mg	Sampling Location	Furnace	Comments
72-001-228	CHE-3	2/16/72	probe wash	7	87.2	Center duct from	H	Fumes vented directly to
229	"	"	filter	7	629.0	fugitive fume		atmosphere.
230	"	"	imp. wash	41	25.0	hood.		
231	"	"	imp. H_2O	122	50.5			
232	"	"	C-E extract	86	-0-			
233	NHE-3	2/16/72	probe wash	11	134.4	North duct from		
234	"	"	filter	11	1005.5	fugitive fume		
235	"	"	imp. wash	45	4.7	hood.		
236	"	"	imp. H_2O	125	4.8			
237	"	"	C-E extract.	90	2.2			
238	SHE-4	2/16/72	probe wash	5	67.9	South duct from		
239	"	"	filter	5	361.7	fugitive fume		
240	"	"	imp. wash	39	4.7	hood.		
241	"	"	imp. H_2O	119	5.0			
242	"	"	C-E extract.	84	0.7			
243	CHE-4	2/16/72	probe wash	8	50.7	Center duct from		
244	"	"	filter	8	125.5	fugitive fume		
245	"	"	imp. wash	42	9.7	hood.		
246	"	"	imp. H_2O	NA				
247	"	"	C-E extract.	87	0.9			
248	NHE-4	2/16/72	probe wash	12	49.7	North duct from		
249	"	"	filter	12	169.4	fugitive fume		
250	"	"	imp. wash	46	5.3	hood.		
251	"	"	imp. H_2O	126	4.9			
252	"	"	C-E extract.	91	0.9			
258	ATE-1	2/17/72	probe wash	13	13.7	Tapping hood duct.		
259	"	"	filter	13	158.4			
260	"	"	imp. wash	47	6.6			
261	"	"	imp. H_2O	127	-0-			
262	"	"	C-E extract.	92	0.7			

INVENTORY FERROALLOY SAMPLES

Sample No.	Test No.	Date	Type Sample	Beaker/ Filter No.	Mass~mg	Sampling Location	Furnace	Comments
72-001-263	ASE-2	2/17/72	probe wash	17	77.2	Furnace cover	H	Kerosine injected into gas stream
264	"	"	filter	17	3.2	scrubber exhaust.		ahead of scrubber. Filter placed
265	"	"	imp. H_2O	131	1.9	↓		after silica gel. ↓
266	"	"	C-E extract.	96	22.1			
267	ATE-2	2/17/72	probe wash	14	7.0	Tapping hood duct.		Fumes vented directly to atmos-
268	"	"	filter	14	81.6			phere.
269	"	"	imp. wash	48	34.3	↓		↓
270	"	"	imp. H_2O	128	-0-			
271	"	"	C-E extract.	93	0.2			
272	ASE-3	2/18/72	probe wash	18	69.5	Furnace cover		Kerosine injected into gas stream
273	"	"	filter	18	4.4	scrubber exhaust.		ahead of scrubber. Filter placed
274	"	"	imp. H_2O	132	2.7	↓		after silica gel. ↓
275	"	"	C-E extract.	97	24.8			
276	ATE-3	2/18/72	probe wash	15	18.7	Tapping hood duct.		Fumes vented directly to atmos-
277	"	"	filter	15	175.8			phere.
278	"	"	imp. wash	49	2.4	↓		↓
279	"	"	imp. H_2O	129	-0-			
280	"	"	C-E extract.	94	0.1			
281	-	2/18/72	acetone blank	1				
282	-	"	water blank	115				
283	-	"	C-E blank	80				
284	-	"	filter blank	36				
72-003-109	CSE-2	7/18/72	probe wash	2	26.3	Scrubber exhaust	H	Retests of scrubber exhaust
110	"	"	filter	1	81.9			without kerosine injection.
111	"	"	imp. wash	9	7.7	↓		Normal EPA train. CO flared
112	"	"	imp. H_2O	24	-0-			at stack.
113	"	"	C-E extract.	15	2.6			↓
115	DSE-2	7/18/72	probe wash	5	8.2			
116	"	"	filter	4	79.5			
117	"	"	imp. wash	12	6.7			
118	"	"	imp. H_2O	27	-0-			
119	"	"	C-E extract.	18	1.8	↓	↓	

INVENTORY FERROALLOY SAMPLES

Sample No.	Test No.	Date	Type Sample	Beaker/ Filter No.	Mass~mg	Sampling Location	Furnace	Comments
72-003-127	DSE-3	7/19/72	probe wash	6	26.4	Scrubber exhaust	H	Retests of scrubber exhaust without kerosine injection. Normal EPA train. CO flared at stack.
128	"	"	filter	(275,277) 5	245.0	↓	↓	↓
129	"	"	imp. wash	13	11.0			
130	"	"	imp. H_2O	28	0.9			
131	"	"	C-E extract	21	8.2			
72-001-285	SWH-1	2/22/72	probe wash	19	73.0	Southwest fugitive fume hood duct.	J	PRODUCT: 80-85% grade CaC_2 Fumes vented directly to atmosphere.
286	"	"	filter	19	104.3	↓	↓	↓
287	"	"	imp. wash					
288	"	"	imp. H_2O	133				
289	"	"	C-E extract.	98	0.9			
290	NEH-1	2/22/72	probe wash	24	75.7	Northeast fugitive fume hood duct.		
291	"	"	filter	24	337.2	↓	↓	
292	"	"	imp. wash	56	7.6			
293	"	"	imp. H_2O	138	1.3			
294	"	"	C-E extract	103	-0-			

INVENTORY FERROALLOY SAMPLES

Sample No.	Test No.	Date	Type Sample	Beaker/ Filter No.	Mass~mg	Sampling Location	Furnace	Comments
72-001-295	NWH-1	2/22/72	probe wash	27	57.2	Northwest fugitive		Fumes vented directly to atmos-
296	"	"	filter	27	70.5	fume hood duct.		phere.
297	"	"	imp. wash	59	6.5			
298	"	"	imp. H_2O	141	6.5			
299	"	"	C-E extract.	106	0.4			
300	SWH-2	2/23/72	probe wash	20	44.8	Southwest fugitive		
301	"	"	filter	20	50.4	fume hood duct.		
302	"	"	imp. wash	52	50.7			
303	"	"	imp. H_2O	134	-0-			
304	"	"	C-E extract.	99	0.8			
305	SEH-2	2/23/72	probe wash	22	28.8	Southeast fugitive		
306	"	"	filter	22	39.9	fume hood duct.		
307	"	"	imp. wash	54	3.6			
308	"	"	imp. H_2O	136	1.7			
309	"	"	C-E extract.	101	2.2			
310	NEH-2	2/23/72	probe wash	25	58.0	Northeast fugitive		
311	"	"	filter	25	146.1	fume hood duct.		
312	"	"	imp. wash	57	10.7			
313	"	"	imp. H_2O	139	7.4			
314	"	"	C-E extract.	104	-0-			
315	NWH-2	2/23/72	probe wash	28	27.4	Northeast fugitive		
316	"	"	filter	28	32.0	fume hood duct.		
317	"	"	imp. wash	60	4.6			
318	"	"	imp. H_2O	142	-0-			
319	"	"	C-E extract.	107	-0-			
320	SWH-3	2/23/72	probe wash	21	53.2	Southwest fugitive		
321	"	"	filter	21	69.2	fume hood duct.		
322	"	"	imp. wash	53	17.8			
323	"	"	imp. H_2O	135	64.7			
324	"	"	C-E extract.	100	12.8			

Sample No.	Test No.	Date	Type Sample	Beaker/ Filter No.	Mass~mg	Sampling Location	Furnace	Comments
72-001-325	SEH-3	2/23/72	probe wash	23	32.0	Southeast fugitive fume hood duct.	J	Fumes vented directly to atmosphere.
326	"	"	filter	23	54.8			
327	"	"	imp. wash	55	3.9			
328	"	"	imp. H_2O	137	-0-			
329	"	"	C-E extract.	102	-0-			
330	NEH-3	2/23/72	probe wash	26	51.2	Northeast fugitive fume hood duct.		
331	"	"	filter	26	158.4			
332	"	"	imp. wash	58	13.4			
333	"	"	imp. H_2O	140	4.3			
334	"	"	C-E extract.	105	-0-			
335	NWH-3	2/23/72	probe wash	29	38.5	Northwest fugitive fume hood duct.		
336	"	"	filter	29	31.4			
337	"	"	imp. wash	61	10.5			
338	"	"	imp. H_2O	143	-0-			
339	"	"	C-E extract.	108	-0-			
340	BSE-1	2/23/72	probe wash	33	26.7	Furnaces cover scrubber exhaust.		CO rich gas used as fuel in lime kiln when possible, otherwise flared.
341	"	"	filter	33	71.4			
342	"	"	imp. wash	65	6.7			
343	"	"	imp. H_2O	147	-0-			
344	"	"	C-E extract.	112	-0-			
345	BTE-1	2/23/72	probe wash	30	140.6	Tapping hood duct.		Fumes vented directly to atmosphere.
346	"	"	filter	30	395.4			
347	"	"	imp. wash	62	11.2			
348	"	"	imp. H_2O	144	0.8			
349	"	"	C-E extract.	109	0.1			
350	BSE-2	2/24/72	probe wash	34	8.6	Furnace cover scrubber exhaust.		CO rich gas used as fuel in lime kiln when possible, otherwise flared.
351	"	"	filter	34	35.7			
352	"	"	imp. wash	66	24.5			
353	"	"	imp/ H_2O	148	-0-			
354	"	"	C-E extract.	113	-0-			

INVENTORY FERROALLOY SAMPLES

Sample No.	Test No.	Date	Type Sample	Beaker/ Filter No.	Mass-mg	Sampling Location	Furnace	Comments
72-001-355	BTE-2	2/24/72	probe wash	31	63.6	Tapping hood duct.	J	Fumes vented directly to atmosphere.
356	"	"	filter	31	417.4			
357	"	"	imp. wash	63	25.5			
358	"	"	imp. H_2O	145	4.7			
359	"	"	C-E extract.	110	0.5			
360	BSE-3	2/24/72	probe wash	35	4.8	Furnace cover scrubber exhaust		CO rich gas used as fuel in lime kiln when possible, otherwise flared.
361	"	"	filter	35	64.6			
362	"	"	imp. wash	67	6.8			
363	"	"	imp. H_2O	149	-0-			
364	"	"	C-E extract.	114	-0-			
365	BTE-3	2/24/72	probe wash	32	89.8	Tapping hood duct.		Fumes vented directly to atmosphere.
366	"	"	filter	32	376.0			
367	"	"	imp. wash	64	9.2			
368	"	"	imp. H_2O	146	-0-			
369	"	"	C-E extract.	111	-0-			
72-003-152	B-2	8/16/72	probe wash	3-152	89.1	B Scrubber Outlet	K	PRODUCT: FeMn - 78.4% Mn; 14% Fe; 6.8% C Only scrubber B in operation.
153	"	"	imp. H_2O	3-153	3.0			
154	"	"	C-E extract.	3-154	3.1			
155	"	"	imp. wash	3-155	18.2			
156	"	"	filter	3-156	327.6			
167	B-5	8/18/72	probe wash	3-167	15.2	B Scrubber Outlet	K	Only scrubber B in operation.
168	"	"	imp. H_2O	3-168	2.6			
169	"	"	C-E extract.	3-169	1.7			
170	"	"	imp. wash	3-170	11.5			
171	"	"	filter	3-171	133.2			
172	B-6	8/18/72	probe wash	3-172	9.0	B Scrubber Outlet	K	Only scrubber B in operation.
173	"	"	imp. H_2O	3-173	2.1			
174	"	"	C-E extract.	3-174	2.7			
175	"	"	imp. wash	3-175	11.7			
176	"	"	filter	3-176	104.2			
177	B-7	8/20/72	probe wash	3-177	10.9	B Scrubber Outlet		Scrubbers A & B operating in parallel. Scrubber B handling about 70% of total flow.
178	"	"	imp. H_2O	3-178	4.1			
179	"	"	C-E extract.	3-179	3.1			
180	"	"	imp. wash	3-180	13.6			
181	"	"	filter	3-181	433.1			

INVENTORY FERROALLOY SAMPLES

Sample No.	Test No.	Date	Type Sample	Beaker/ Filter No.	Mass~mg	Sampling Location	Furnace	Comments
72-003-182	A-7	8/20/72	probe wash	3-182	8.5	A Scrubber Outlet	K	Scrubbers A & B operating in parallel. Scrubber A handling about 30% of total flow.
183			imp. H_2O	3-183	-0-			
184			C-E extract.	3-184	0.5			
185			imp. wash	3-185	11.5			
186			filter	3-186	56.6			
187	B-8	8/21/72	probe wash	3-187	12.3	B Scrubber Outlet		Scrubbers A & B operating in parallel. Scrubber B handling about 70% of total flow.
188			imp. H_2O	3-188	0.8			
189			C-E extract.	3-189	0.8			
190			imp. wash	3-190	7.6			
191			filter	3-191	200.2			
192	A-8	8/21/72	probe wash	3-192	11.6	A Scrubber Outlet		Scrubbers A & B operating in parallel. Scrubber A handling about 30% of total flow.
193			imp. H_2O	3-193	1.1			
194			C-E extract.	3-194	0.2			
195			imp. wash	3-195	7.8			
196			filter	3-196	79.2			
72-003-207	C-11	8/24/72	probe wash	3-207	34.5	No. 2 Scrubber Outlet	L	PRODUCT: SiMn - 68.3% Mn; 19.3% Si, 11.3% Fe Particulate visibly different from previous runs. An exhaust fan started to vibrate excessively, causing reentrainment of particulate accumulations inside fan housing and ductwork. Scrubbers No.'s 1 & 2 in series.
208			imp. H_2O	3-208	2.2			
209			C-E extract.	3-209	1.2			
210			imp. wash	3-210	14.1			
211			filter	3-211	115.1			
212	C-12	8/24/72	probe wash	3-212	219.6	No. 2 Scrubber Outlet		
213			imp. H_2O	3-213	2.3			
214			C-E extract.	3-214	2.1			
215			imp. wash	3-215	7.3			
216			filter	3-216	111.9			
			3" blank filter	72-603			K&L	
			3" blank filter	72-604			K&L	
			3" blank filter	72-605			K&L	
			3" blank filter	72-606			K&L	

INVENTORY FERROALLOY SAMPLES

Sample No.	Test No.	Date	Type Sample	Beaker/ Filter No.	Mass~mg	Sampling Location	Furnace	Comments
			4" blank filter	72-609			K&L	
			4" blank filter	72-610			K&L	
			4" blank filter	72-611			K&L	
			4" blank filter	72-612			K&L	

TABLE 2. MASS SPECTROGRAPHIC ANALYSIS OF COMPOSITED FERROALLOY SAMPLES (PPMW)
(DATA FOR FILTERS ARE BLANK CORRECTED)

Element	CSL-2			CSL-4			CSL-5			CSL-9			CSL-11		
	Filter	Probe	Impinger	Filter	Probe	Impinger	Filter	Probe	Impinger	Filter	Probe	Impinger	Filter	Probe	Impinger
Li	30	10	30	100	10	20	20	30	30	5	5	3	5	0.5	20
Be	0.3	0.02	0.05	0.1	0.1	0.01	0.1	0.05	0.1	0.05	0.1	<0.02	0.3	<0.03	0.05
B	1000	50	200	(a)	200	200	30	50	500	100	30	200	2000	3	200
F	200	10	2	<100(a)	10	10	50	30	20	300	50	30	300	<1	5
Na	1%	2000	1%	(a)	2000	3000	1000	300	1%	1000	200	1000	2000	100	5000
Mg	1%	2000	5000	2%	3000	3000	1%	1000	2%	5%	2%	1000	3%	<20	1000
Al	1%	1000	2000	(a)	1000	1000	1%	200	5000	1%	5000	300	5%	5	200
Si	30%	1%	3%	(a)	2%	2%	30%	2%	5%	10%	10%	3%	5000	5000	5%
P	100	50	300	50	50	100	200	100	1000	20	20	50	100	20	50
S	500	1000	3%	2000	200	300	1000	200	3%	200	200	500	5000	5	200
Cl	2000	3000	500	3000	2000	2000	500	300	300	500	500	2000	5000	100	500
K	5000	1%	1%	5%	2%	1000	2%	5000	~3%	200	300	2000	1000	100	1%
Ca	3%	1000	1%	2%	3000	3%	2%	2000	10%	~50%	70%	3%	30%	200	1%
Sc	<1	<1	<1	<2	<1	<1	3	<3	<3	<1	<0.3	<1	10	<3	<3
Ti	<30	<1	<1	<30	500	300	30	<20	1000	<3	50	<30	2000	<20	<20
V	5	2	10	2	10	2	10	10	20	0.5	3	2	100	<0.3	5
Cr	300	300	200	100	1000	300	300	30	300	100	100	30	200	<20	<20
Mn	1000	1000	3000	20%	1%	5000	3%	1000	3%	1000	1000	200	2%	200	2000
Fe	1000	3000	3000	500	2000	1000	10%	3000	3%	1%	1%	1000	5000	30	10
Co	<3	3	50	10	3	500	5	<1	5000	<1	2	300	5	<1	<1
Ni	500	3000	300	<30	300	100	500	<2	100	30	<10	<10	<10	<5	<5
Cu	100	1000	1000	100	300	200	3000	500	5000	30	10	100	50	30	100
Zn	1000	5000	3000	3000	1000	500	2000	3000	5000	20	20	100	5000	2000	1000
Ga	2	<2	<2	10	2	2	20	<2	3	0.5	<2	<2	10	<2	<2
Ge	<3	<10	<10	<3	<10	<10	10	<10	<3	<3	<3	<30	<3	<20	<10
As	20	3	5	10	3	10	300	50	30	1	50	300	500	100	3000
Se	<5	<10	<10	<10	<5	<20	<5	<10	<10	<5	<10	<10	20	<10	<10
Br	10	100	100	50	100	100	50	100	100	10	20	100	30	3	30
Rb	300	20	20	300	50	10	300	100	50	3	10	<5	50	0.5	20
Sr	500	20	50	500	30	30	1000	50	200	200	300	100	200	<5	<5
Y	<0.5	<0.5	0.5	<0.5	0.5	<0.5	<0.5	<0.5	10	<0.2	<1	<2	20	<2	<2

TABLE 2. (CONTINUED)

Element	CSL-2			CSL-4			CSL-5			CSL-9			CSL-11		
	Filter	Probe	Impinger	Filter	Probe	Impinger	Filter	Probe	Impinger	Filter	Probe	Impinger	Filter	Probe	Impinger
Zr	30	<5	<5	50	<5	<10	3	<5	50	<1	3	<10	30	<20	<20
Nb	<0.2	<5	<2	<0.3	<2	<5	0.5	<2	3	0.3	<0.3	<2	0.5	<2	<2
Mo	5	20	3	<3	3	<3	20	<10	20	2	<1	<20	30	<10	<10
Ru	<0.5	<10	<3	<0.5	<3	<10	<2	<10	<10	<0.5	<1	<5	<0.5	<10	<10
Rh	<0.2	<3	<1	<0.5	<1	<2	<0.5	<2	<2	<0.2	<0.5	<2	<1	<2	<2
Pd	<2	<5	<3	<2	<3	<3	<3	<2	<1	<2	<2	<2	<2	<1	<2
Ag	3	<10	<2	10	3	<3	10	<3	3	<0.1	<1	<3	3	<3	<3
Cd	2	<10	20	30	5	20	10	5	30	<2	<3	<10	5000	30	20
In	<2	<2	<5	<2	<2	<2	<5	<2	<20	<1	<0.5	<5	<3	<2	<2
Sn	10	1000	1000	20	30	300	2000	1000	2000	3	50	500	10	20	50
Sb	10	<3	3	30	3	5	1000	300	100	1	10	30	20	<3	<3
Te	<0.5	<5	<3	30	<1	<1	30	<20	2	<0.5	<1	<3	20	<2	<20
I	2	5	5	3	5	10	10	20	5	2	2	20	300	3	5
Cs	5	<3	<1	30	<1	<3	20	<3	<1	0.3	<1	<3	10	<3	<3
Ba	1%	50	500	2%	300	50	500	100	500	100	500	300	500	2	100
La	1	0.5	500	2	2	3	2	<1	5	1	2	<3	20	<3	<3
Ce	1	<5	<3	1	<2	<2	3	<5	10	0.5	5	<3	50	<3	<3
Pr	0.3	<1	<1	<0.5	<1	<1	0.2	<3	3	<0.2	0.3	<3	10	<3	<3
Nd	<0.5	<3	<2	<1	<2	<2	<1	<3	3	<0.5	2	<10	20	<3	<3
Sm	<0.5	<10	<5	<2	<5	<5	<0.5	<20	<2	<0.5	<5	<10	5	<20	<20
Eu	<2	<2	<2	<2	<2	<2	<2	<5	<2	<0.5	<5	<5	2	<5	<5
Cd	<1	<1	<1	<3	<1	<1	<0.5	<3	<3	<0.3	<1	<3	<3	<3	<3
Tb	<1	<3	<1	<1	<1	<1	<0.2	<1	<1	<0.1	<0.3	<1	<0.5	<1	<1
Dy	<5	<3	<3	<2	<3	<3	<0.5	<20	<5	<0.3	<1	<10	<3	<3	<10
Ho	<0.5	<3	<2	<0.3	<1	<3	<0.2	<10	<1	<0.2	<0.3	<3	<0.3	<10	<10
Er	<0.5	<3	<1	<0.5	<1	<2	<0.3	<10	<1	<0.3	<1	<10	<1	<10	<20
Tm	<1	<1	<0.3	<0.5	<0.3	<0.3	<0.1	<3	<0.3	<0.1	<0.3	<1	<0.5	<3	<3
Yb	<1	<3	<1	<0.5	<1	<1	<0.5	<20	<2	<0.5	<1	<3	<2	<20	<20
Lu	<1	<3	<1	<1	<1	<3	<0.1	<3	<0.3	<0.1	<0.5	<3	<1	<5	<5
Hf	<2	<20	<5	<2	<5	<5	<0.3	<20	<1	<0.3	<2	<20	<1	<20	<20
Ta	<2	<5	<20	<1	<20	<20	<0.1	<3	<30	<0.1	<3	<10	<0.5	<5	<10
W	<0.5	<30	<2	3	<1	<3	2	<50	3	<0.3	1	<20	2	<10	<30

(continued)

TABLE 2. (CONTINUED)

Element	CSL-2			CSL-4			CSL-5			CSL-9			CSL-11		
	Filter	Probe	Impinger	Filter	Probe	Impinger	Filter	Probe	Impinger	Filter	Probe	Impinger	Filter	Probe	Impinger
Re	<0.5	<10	<2	<0.2	<2	<3	<0.2	<3	<0.5	<0.2	<1	<5	<0.5	<10	<10
Os	<1	<50	<3	<0.3	<10	<10	<0.5	<50	<1	<0.3	<2	<50	<0.3	<20	<50
Ir	<0.5	<5	<2	<0.5	<2	<5	<0.3	<20	<0.5	<0.2	<2	<20	<0.3	<5	<20
Pt	<0.5	<3	<3	<0.3	<3	<3	<0.3	<3	<0.3	<0.3	<2	<10	<0.5	<10	<10
Au	<0.3	<1	<1	<0.3	<1	<1	<0.1	<1	<1	<0.1	<0.5	<3	<0.2	<3	<3
Hg	0.5	<20	<3	<0.3	10	<3	1	<30	3	<0.3	<2	<20	<0.3	<20	<50
Tl	2	<2	0.5	50	<2	<2	2	<2	<2	<0.2	<2	<5	100	<5	<5
Pb	300	2000	500	1000	300	500	3000	1%	1000	3	20	50	2000	30	300
Bi	5	<3	1	20	3	<3	300	1000	5	<0.3	<1	<5	2	<3	<3
Th	<0.2	<10	<1	<0.2	<1	<1	<0.2	<10	<1	<0.2	<1	<5	<2	<3	<10
U	<0.2	<10	<1	<0.2	<1	<2	<0.2	<10	<1	<0.2	<1	<5	<2	<3	<10

TABLE 3. POLYNUCLEAR AROMATIC HYDROCARBON CONTENT OF COMPOSITED FERROALLOY SAMPLES

Sample	Total PNA's	Sample Wt, g	ppm PNA
CSL-2	4,000 ng	0.152	26
CSL-4	1,400 ng	0.109	13
CSL-5	42,000 ng	1.996	21
CSL-9	4,000 ng	0.858	5
CSL-11	24.0 mg	0.895	27,000

TABLE 4. WEIGHTS OF ANALYZED SAMPLES, GRAMS

	Probe	Filter	Impinger	Total
CSL-2	0.0646	0.0308	0.0563	0.1517
CSL-4	0.0167	0.0717	0.0204	0.1088
CSL-5	0.2033	1.7450	0.0475	1.9958
CSL-9	0.2083	0.5963	0.0538	0.8584
CSL-11	0.0504	0.8200	0.0250	0.8954

TABLE 5

PNA'S DETERMINED IN FERROALLOY

SAMPLE CSL-11

PNA	Mass Spectrum	Weight Found (mg)
Methylnaphthalenes	41,45	0.1
Biphenyl	56	0.7
Dimethylnaphthalenes	71,75	0.3
Acenaphthalene	87	2.7
Dihydrofluorene	109	5.9
Fluorene	140	6.6
Methyldihydrofluorene	152	1.2
Methyldihydrofluorene	164	1.7
2-Methylfluorene	199	0.4
1-Methylfluorene	208	0.2
Dimethyldihydrofluorene	215	0.3
Hexahydroanthracene	234	3.3
Anthracene, phenanthrene	254	66
Methylanthracene	293	<0.1
Hexahydromethylanthracenes	293,307	<0.1
2-Methylanthracene	320	4.3
4.5-Methylenephenanthrene	329	2.6
1-Methylanthracene	336	0.8
Aceanthrylene	351	1.6
Dimethylanthracenes	392,407	0.4
Fluoranthene	428	43
Dihydrobenz (a or b) fluorene	449	3.5
Pyrene	459	30
Dihydrobenz (c) fluorene	469	1.7
Methyldihydropyrene	484	0.8
Methyl pyrenes, fluoranthenes	499	1.7
Ditto	505	1.6
"	528	2.0
"	513	1.3
"	543	1.3
Benz (c) phenanthrene	596	3.6
Hexahydrochrysene	596	3.9
Benz (a) anthracene, chrysene	626	21
Methylbenzanthracenes, methyl chrysenes	644	1.3
Ditto	659	0.5
"	665	2.1
Dodecahydrobenzanthracene	673	0.7
Dodecahydrobenzchrysene	677	0.8
Benz (k and b) fluoranthenes	728	28
Benz (j) fluoranthene	735	2.9
Benzpyrenes	750	15.7
Perylene	759	2.5
Indeno (1,2,3-cd) pyrene	855	6.6
Benz (ghi) perylene	887	5.7
Total		280 mg

Table 6. High resolution mass spectrometric data for select carcinogenic PNA's - Sample CSL-11

m/e	Formula	Relative concentration[a/]	Possible Compounds
228	$C_{18}H_{12}$	12	Benzo(c)phenanthrene
252	$C_{20}H_{12}$	17	Benzo(b)fluoranthene Benzo(j)fluoranthene Benzo(a)pyrene
254	$C_{20}H_{14}$	1	Benz(j)aceanthrylene (cholanthrene)
256	$C_{20}H_{16}$	<1	7,12-Dimethylbenz(a)anthracene
267	$C_{20}H_{13}N$	<.1	Dibenzo(c,g)carbazole
268	$C_{21}H_{16}$	<.1	3-Methylcholanthrene
278	$C_{22}H_{14}$	3	Dibenz(a,b)anthracene
279	$C_{21}H_{13}N$	--[b/]	Dibenz(a,j)acridine Dibenz(a,b)acridine
302	$C_{24}H_{14}$	1	Dibenzo(a,b)pyrene Dibenzo(a,i)pyrene Dibenzo(b,def)chrysene
		Additional PNA's - major components	
178	$C_{14}H_{10}$	14	Anthracene/phenanthrene
202	$C_{16}H_{10}$	17	Pyrene/fluoranthene

a/ Only relative concentrations available at this time.

b/ Not detected.

Table 7. Mass spectrometric analysis for PNA's in Sample CSL-11.

Structural type, including Alkyl derivatives	Wt.%
Naphthalenes	0.06
Acenaphthylenes/Fluorenes	.11
Acenaphthenes	.04
Anthracenes/Phenanthrenes	.63
Phenyl naphthalenes	.21
Methylene phenanthrene	.02
4-rings, peri condensed	.83
4-rings, cata condensed	.54
5-rings, peri condensed	.71
5-rings, cata condensed	.10
6-rings, peri condensed	.19
Binaphthyls	.13
Methylene chrysene	.02
6-rings, cata condensed	.01
7-rings, peri condensed	.01
Total	3.6

a/ Weight percent in solvent as submitted.

February 24, 1975

Dr. William B. Kuykendall
Process Measurement Section
Particulate and Chemical Processes Branch
National Environmental Research Center
Research Triangle Park
North Carolina 27711

Dear Dr. Kuykendall:

Further to our telephone conversation on February 20, I am writing to confirm our preliminary POM screening data for the ferroalloy samples CSL-7, CSL-12, and CSL-13. The former two samples were shipped directly to Dr. R. E. Heffelfinger, and I collected CSL-13 on my last visit with Dr. McCrillis at the NERC last month.

The individual components of each sample were dissolved in methylene chloride, composited and divided into two equal portions, one portion of each sample was reduced to a volume of about 1.0 ml and then subjected to a Rosen-type separation in order to isolate the POM species. The three fractions were analyzed by fluorescence spectroscopy and the total POM measured as "anthracene equivalent". Our earlier studies of this nature had used "benz(a)pyrene equivalent", but following subsequent GC-MS analysis of CSL-11, and comparisons of the fluorescence yields for benz(a)pyrene and anthracene, it was quickly apparent that "anthracene equivalent" fluorescence measurements would lead to somewhat better precision. The majority of POM's present were more similar to anthracene than benz(a)pyrene, as regards fluorescence yield.

The fluorescence results for the total POM measurements on the three samples may be very simply expressed:

Sample	Total POM mg (Anthracene Equivalent)
CSL-7	3.3
CSL-12	7.3
CSL-13	195

For comparison, the last Norwegion "closed" ferroalloy plant sample (CSL-11) was shown to have approximately 24 mg POM benz(a)pyrene equivalent), although subsequent GC-MS analysis increased this by slightly greater than one order of magnitude (280 mg).

We should be interested to know if all of these samples were from "closed" systems, or just the last one. In any event, all of the values seem disturbingly high!

I am shipping a portion of each of these samples to Dr. Sharkey as you requested, and will indicate the precise fraction of the total which his sample represents, probably very close to 50%. Meanwhile, we look forward to your reaction to the above data. If you do decide to go ahead with the GC-MS analysis, we would look primarily for the 8 NAS carcinogens, but could also include complete quantification of all other major PNA's at no additional cost. This work could hopefully be completed within two weeks of your authority to proceed.

I look forward to hearing from you.

Sincere regards,

Peter W. Jones
Staff Chemist
Organic and Structural Chemistry Section
PWJ:lm
cc: Dr. L. D. Johnson
Dr. R. McCrillis

Table 2. Mass spectrometric analysis for PNA's in Sample CSL-7.

Major structural types, including alkyl derivatives	Wt.%
Naphthalenes	1.5
Acenaphthylenes/Fluorenes	2.0
Acenaphthenes	1.8
Anthracenes/Phenanthrenes	7.3
Phenyl naphthalenes	6.2
4-rings, peri condensed	18.6
4-rings, cata condensed	14.6
5-rings, peri condensed	19.3
5-rings, cata condensed	6.0
6-rings, peri condensed	14.6
Binaphthyls	5.8
6-rings, cata condensed	0.7
7-rings, peri condensed	1.6
Total	100.

August 19, 1974

Dr. William B. Kuybendal
Control Systems Laboratory
National Environmental Research Center
Environmental Protection Agency
Research Triangle Park, North Carolina 27711

Dear Dr. Kuybendal:

Contract 68-02-1409
Task 1

Enclosed are the results of analyses of composites of samples obtained from the Ferro-alloy industry using the EPA Method 5 train.

The composites, consisting of approximately 15 components including probe, filter, and impinger collections from each of 5 runs, carried EPA's identification as follows:

CSL- 2 - F - Si
CSL- 4 - G - SiMn
CSL- 5 - H - 50% FeSi
CSL-9 - J - CaC_2
CSL-11. - K - FeMn

The composites were analyzed by spark source mass spectrometry (SSMS) for metallic elements and by a combination of liquid chromatography and spectrofluorimetry for polynuclear aromatic hydrocardons (PNA's).

With the agreement of the task officer, metals analyses were made on each of the composited probe, filter, and impinger samples for each run. It was agreed that for control considerations it is beneficial to separate analytical data of the front half (probe and filter) from the back half (impinger) of the EPA Method 5 train. In addition, it is beneficial analytically to carry out separate analyses on the probe and filter because of large analytical interferences from the filter.

The analyses results for metals in probe, filter, and impinger for each composite are shown in Table 1.

These SSMS data are estimated to be repeatable within factors of 1/2 to 2 and are estimated to be accurate within a factor of 1/3 to 3 of the true value.

As noted in Table 1 the data from the filters samples have been corrected for blank. For one sample (CSL-4 filter) the blank level for a few elements was about equal to the amount of those elements found in the sample. Thus concentrations for those elements could not be estimated.

For the hydrocarbon analysis, the probe work, filter catch, and impinger solutions from each run were combined into one composite sample in methylene chloride and subjected to quantitative liquid chromatography on an alumina column.

Each sample was subjected to quantitative liquid chromatography on an aluminia column. Following elution of the aliphatic hydrocarbons with 25 ml petroleum ether, the sample was eluted with successive aliquots of 25 ml of 20 percent methylene chloride in petroleum ether. The second and third such fraction would contain the PNA's that was present; these fractions were combined. This sample was evaporated with a stream of nitrogen to a volumn of about 2 ml prior to spectrofluorimetric analysis.

A portion of each sample was transferred to a quartz cuvette, diluted to 3 ml in methylene chloride, and placed in a Turner Model 210 for spectrofluorimetric quantitation using excitation of 3500 ± 50 A and emission of 4100 ± 50 A. The spectrofluorimeter was calibrated for benz(a)pyrene by means of several determinations of 20 to 1200 ng of pure benz(a)pyrene using an identical procedure to that employed for the unknown samples. Using this calibration, the total PNA's in the five samples were estimates as shown in Table 2.

This method of estimating the total PNA's makes use of excitation and emission wavelengths which are typical of PNA's, and assumes that the average emission yield from all PNA's is typified by that of benz(a)pyrene. In view of the foregoing, the absolute values of total PNA's reported must be treated with care, but since all five samples come from the same emission source, relative differences in total PNA concentrations are considered to be reasonably reliable.

Table 3 gives the sample weight data utilized in making the analytical calculations.

Through completion of the analyses described above, it is estimated that $4,500 has been expended on this task order.

Very truly yours,

R. E. Heffelfinger
Associate Manager
Analytical and Physical
Chemistry Section

REH/jmp
Enc.

Airmail

October 2, 1974

Dr. Larry D. Johnson
Process Measurement Section
National Environmental Research Center
Research Triangle Park
North Carolina 27711

Dear Larry:

Further to our telephone conversation on September 24, I am sending you data for our PNA analyses on Ferroalloy sample CSL-11.

The sample was prepared as indicated on the report to Dr. W. B. Kuykendal dated August 19. Analysis of the methylene chloride extract by GC-MS and GC indicated the presence of benz(c)phenanthrene and benzpyrene; as you requested, the two isomers of the latter were not differentiated. These two compounds were quantified by GC following calibration with pure standards, the results are shown in Table 1.

In order to derive maximum benefit from the results, and since little additional effort was involved, all other major PNA compounds were quantified using the calibration factor for benz(c)phenanthrene. Using a single calibration in this manner will not lead to serious error, since the GC peak shapes of the major PNA compounds show little variation, and the response factors are expected to be similar. The results are also shown in Table 1. The total quantity of PNA's found in this study was 230 mg, which excludes many minor peaks. I am also enclosing a copy of the gas chromatogram of CSL-11, which further illustrates that there are relatively few really major compounds present, but quite a number of minor peaks. We have mass spectra for all of the chromatographic peaks which I can send you if you feel it would be useful.

I am sending a sample of our CSL-11 extract to Dr. Sharkey as agreed. For purposes of quantification this will represent 12 percent of the total PNA extract of CSL-11. We should be interested to compare the two sets of results.

TABLE 1. MAJOR PNA'S DETERMINED IN FERROALLOY SAMPLE CSL-11

PNA	Weight Found (m.g.)	ppm in sample
Hexahydroanthracene	3.3	3,700
Anthracene, phenanthrene	66	74,000
Methyl Anthracenes	5.1	5,700
Fluoranthene	43	48,000
Pyrene	30	34,000
Benz(c)phenanthrene	3.6	4,000
Chrysene, benz(a)anthracene	21	23,000
Benzfluoranthenes	28	31,000
Benz(a)pyrene, benz(e)pyrene	15.7	17,000
Perylene	2.5	2,800
Indeno(c,d)pyrene	6.6	7,400
Benz(ghi)perylene	5.7	6,400
Total	230	

Calculations are based on information in this section and EPA report 450/2-74-008, pertinent parts of which are in another section of this report.

CSL-2 — 0.152 gms. — 26 ppm PNA
open Si metal baghouse — 0.1756 actual capture

11.8 lb/hr avg. × 26 ppm = 3.068×10^{-4} lbs PNA/hr
= 0.0003068 or 0.0031 lbs PNA/hr 17 mw
= 0.000018 or 0.00018 lbs PNA/mwhr
Baghouse 98.9% efficiency

Thus, actual production of PNA = $\frac{.000018}{1 - .989}$ = 0.00164 or 0.016 PNA lbs/mwhr

CSL-4 — 13 ppm PNA — 7 mw
open SiMn scrubber exhaust

11.57 lbs particulate/hr × 13 ppm = 1.5041 or $.0015 \times 10^{-4}$ lbs/hr
= 0.0000215 or 0.0002 lbs PNA/mwhr
if scrubber 94.5% efficiency = 0.000391 or 0.004 lb/mwhr = PNA production rate

CSL-5 — 21 ppm PNA — 46 mw
semi-sealed hood, no control

429.4 lbs/hr × 21 ppm = 0.00902 or 0.09 lbs PNA/hr
= 0.0002 or .002 lbs PNA/mw

CSL-7 — 506.2 mg — 3.3 mg PNA = 6519 ppm (app)
scrubber outlet--semi-sealed

4.30 lb/hr × 6519 ppm = 0.028 lb PNA/hr
at 46 mw = 0.00061 lbs PNA/mwhr
at 93% efficiency = 0.0087 lbs PNA/mw production rate

CSL-5 + CSL-7 = 0.0026 lb PNA/mw

CSL-9 — 5 ppm PNA — 24 mw
tapping 15 mi/1-1/3 hr
semi-sealed CaC_2
20% of time, no controls

10 lbs/hr × 5 ppm = 0.00005 or 0.0005 lbs PNA/hr
= 0.000002 or 0.00002 lbs PNA/mwhr

CSL-11 — 313,000 ppm
sealed FeMn
0.950 lb/hr × 313,000 ppm = 0.297 lb PNA/hr
at 27 mw = 0.011 lb PNA/mwhr
scrubber efficiency unknown if assume 85% = 0.073 lb PNA/mwhr production rate

CSL-12 44,000 167.1 mg sample

Sealed SiMn

0.258 lb/hr × 44,000 = 0.0114 lb PNA/hr
at 23 mw = 0.00050 lb PNA/hr
scrubber efficiency unknown

CSL-13 225,000 ppm (195 mg PNA/863 mg of sample)
sealed FeMn .676 lb/hr × 225,000 ppm = 0.1521 lb/hr
at 27 mw = 0.0056 lb PNA/mwhr

CSL 7, 11, 12, 13 by equivalent method to GC-MS.
CSL 2, 4, 5, 9 by method that yielded CSL 11 an order of magnitude too small. Thus, we may need to multiply CSL 2, 4, 5, 7 by 10 as was done above. The modified numbers follow the word "or".

6.0 INFORMATION OBTAINED FROM EPA REGIONAL FILES

AIRCO ALLOYS, INC.
CALVERT CITY, KENTUCKY

Air

The EPA Region IV file for this facility indicates that EPA does not believe Airco is acting in "good faith" to decrease their air emissions. Therefore, on May 11, 1978 EPA decided not to allow an extension of time for compliance and began an enforcement action.

On February 10, 1976 EPA initiated a compliance action and Airco agreed to achieve compliance by 11/1/77 on the following schedule:

- Install capture and collection equipment on #6 furnace by 7/1/77
- Install capture and collection equipment on #4 furnace by 8/15/77
- Installation of all control equipment of furnaces 9, 12, 13, 15, 16 before April 15, 1977

EPA compliance requirements were:

- 3% opacity from the baghouse (EPA method 9)
- Furnace 13 excepted, all furnace emissions zero opacity except 40 percent during tapping
- For furnace 13, 15 percent opacity during metallurgical treatment process.

On February 15, 1975 Airco reported that all attempts to reopen the carbide plant at Calvert City had been abandoned. Also reported was the following furnace status:

#4	-	capacity doubled, ready for operation
#5	-	shutdown planned 4/30/76
#6	-	shutdown in three months (May 1975)
#7	-	shutdown until controlled
#9	-	connect into #12, 13 baghouse
#15, 16	-	Baghouse on site (1,300,000 CFM)

In June 1976 there were three controlled and 7 uncontrolled furnaces. The estimated particulate emission rate was:

7,475 lbs/hr from all furnaces (EPA regulations--lbs/hr)	
FCE 4, 6	450 lbs/hr each actual - 14 lb/hr allowed (carborundum baghouse was to be installed)
FCE 8	850 lb/hr actual - 16 lb/hr allowed (#8 is permanently out of service)
FCE 9, 15, 16	Equipment 80 percent complete (6/76)

- All furnaces are relatively felxible and produce different products.
- #13A - flux addition is a problem area
- Slag casting is a problem area
- #13 excessive emissions from roof monitor

FCE No.	Type	Date Installed	Feed Material	Feed tons, Annual	Product	Product tons, Annual	Control Equipment	Date Installed	% Efficiency	Gas Flow CFM
4	submerged arc	1976	ore, coke	25,000	FeCr	6,900	Fabric filter	1976	98	570,000
6	"	1964	"	105,000	SiMn	23,000	Joint with #4	"	"	"
8	"	1949	scrap, coke	40,000	FeMn	14,000	None	-- out of service --		
9	"	1963	-- not operate in 1976 --							
12	"	1964	ore, coke	105,000	SiMn	23,000	Fabric filter	6/74	98	530,000
13	arc melt	1965	ore, lime	108,000	ore,lime melt	108,000	Joint with	12, 13A		
13A	reaction ladle	1965	lime, SiMn, ore	210,000	MC FeMn	36,000	Joint with	12, 13		
14	submerged arc	1965	Gravel, coke	13,000	75% FeSi	2,900	Fabric filter	3/72	98	25,000
15	"	1965	"	128,000	50% FeSi	51,000	"	1976	"	1,250,000
16	"	1966	Gravel, coke and scrap	18,000	"	7,200	Joint with	9 + 15		
16	"	"	"	125,000	75% FeSi	29,000	"	"		

Data above is for 1976

Solids

- Particulate storage silos for #12, 13, 15, 16, 9 (excessive dust levels, 1976)
- #4 and 6 baghouse dust removed by truck
- Slags go to landfill
- Collected fumes go to sanitary landfill
- Raw materials and products stored in piles and bins.

In this file was a table giving the following emission relationships which were said to be independent of furnace capacity or furnace type. The latter is questionable.

Product type	mwhrs/ton Product	$\frac{\text{tons charge}}{\text{ton Product}}$	$\frac{\text{lbs Dust}}{\text{ton Product}}$	$\frac{\text{lbs Dust}}{\text{mwhr}}$
Silicon	14	4.9	1,200	86
75% FeSi	8.8	4.5	915	104
50% FeSi	5.0	2.5	446	89
SiMn	4.4	3.1	219	50*
FeMn	2.4	3.0	335	62
Mn ore	1.6	3.5	133	83
FeCrSi	7.4	3.4	831	112*
FeCr	4.2	4.0	335	62
Cr ore	1.2	1.2	11	9
CaC_2	2.6	1.6	-	

Note that numbers for FeMn and FeCr do not follow relationship:

$$\frac{\text{mwhr}}{\text{ton produce}} \times \frac{\text{lbs Dust}}{\text{mwhr}} = \frac{\text{lbs Dust}}{\text{ton product}}$$

Permit No. KY0003531

Airco Alloys
P.O. Box 217
Calvert City, KY 42029

Water

"Submerged arc electric furnaces"
"3 point discharges: 001 storm + process H_2O
002 storm + process H_2O
003 storm + sanitary H_2O

7/28/76 001: 6.4 pH; 6.6 D.O.; .4 MGD;
002: 8.7 pH; 5.8 D.O.; .13 MGD;
003: 6.0 pH; 5.8 D.O.; .1 MGD;

Company was late in complying with scheduled water control equipment. Because of good faith shown in air pollution control implementation, a consent AO was appropriate enforcement action. Had consistent problems with BOD because of high inlet concentration. EPA is to grant permit modification to net "addition" basis

1/78 reported	.288 MGD flow avg./max.	Permit Values
	74.7/98.4 lb/d SS	137/205 permit
	14.1/20.5 lb/d BOD_5	4.3/7.0 permit
	7.7-8.8 pH	6-9 permit

Airco Alloys, Inc.
Plant Address: Pittsburg Avenue
Charleston, SC 29402
803-722-8355
Richard Anderson, Plant Engineer

Corporate Address: 3801 Highland Avenue
Niagara Falls, NY 14305
716-285-1252
Roy Wintersteen, Mgr. Environmental Control

Air

From an 8/17/77 inspection report:
- 156,000 acfm per furnace @ 400°-600° F
- Uses ESP's operated at 200° F
- State agency contacts: Bill Brantley, Jack Woody } SCDHEC

Reference - Stanley, W T., and R. R. Hall, "Vol. I, Airco, Inc., Alloys and Carbide Division, Charleston, S.C.," Draft Final Report, Contract 68-01-4143, Technical Service Area 1, Task Order No. 5, EPA contract officer: Greg Glahn, Region IV, GCA/Technology Div., Bedford, Mass, Rep. no. GCA-TR-77-07-G.

Water

AIRCO ALLOYS AND CARBIDE
CHARLESTON, S.C.

Permit Information -- Effective dates 6/25/74 -- 6/25/79

Two process discharge stream

.003 - contact cooling water--used to cool and humidify gas before ESP. Is about 1% of the approximate 100 gpm of city water for stack gas cooling--gas cooled to 200-210° F, 100% humidity. The discharge goes to a small pond (100 x 100 x 8 feet) which is flooded by high tides. The discharge also contains rain water.

.004 - comes from "heavy media process" (HMP) which removes reduced metallic chromium from slag. The ore (41-54% chromium oxide) goes through E.A. furnace--5% of reduced metallic chromium is left in the furnace as slag. This is recovered (as far as possible using "HMP" (leaching) and discharge goes to drainage ditch by Seaboard Railroad. Also contains some rainwater.

All discharges to shipyard creek

Permit Limits

.003

	Daily avg.	Daily max.	Concentration
Total suspended solids	24.6 lb/day 11.2 kg/day	49.1 22.3	60 mg/l
Chromium total	0.49 lb/day 0.22 kg/day	0.92 0.42	1.5 mg/l
chromium, Hexavalent	0.046 lb/day 0.021 kg/day	0.092 0.042	
pH	6-9		

.004

	Daily avg.	Daily max.	Concentration
TSS.	2,660 lb/day 1,210 kg/day	5,320 2,420	60 mg/l
Cr, total	53 lb/day 24 kg/day	106 48 kg/day	1.5 mg/l
pH	6-9		

Sewage treatment plant separate discharge;
no information collected for the ferroalloy project

This plant is the world's largest producer of chromium metal which is primarily in the form of ferrochromium (70-75% chromium). They produce 300 ton/day of ferrochrome. The furnace is fired entirely by electricity to melt and reduce with coke. The ore is from Turkey and Russia. Shifting from Rhodesian and British Southwest African chrome ore caused a price increase of $35-96/ton. The General Services Administration has stockpiled on company property 60 days critical industry supply of ferrochrome and 500,000 tons of unprocessed ore.

Compliance Data Pt .003

Date (month/year)	Flow	TSS Daily avg.	TSS Daily max.	TSS concentration	Cr, total Daily avg.	Cr, total Daily max.	Cr, total concentration
3/78	0.012 MGD	1.10 kg/day		(24 mg/l)	0.031 kg/day	.036 kg/day	0.7 mg/l
2/78	.011	1.02 "	1.16		.028 "	.033 "	
1/78	.0135	1.09 "	1.26		.033 "	.038 "	
9-12/75	-	4.3 "	7.9	16.4 mg/l	.017 "	.032 "	.63 mg/l
3- 6/76	-	.74 "	1.45	.28 mg/l	.027 "	.032	1.02 mg/l
12/74-3/75		6.7 "	15.1	25.5 "	.025 "	.035 "	95 "
9-12/74	-	7.6 "	14.5	29 mg/l	.029 "	.039 "	1.09 "
6- 9/74	-	1.48 "	2.04	19.6 "	.104 "	.114 "	1.38 "
Special test Oct. 1974	.036	(1.5-10 lbs/day) 12 to 35 mg/l			.04 lb/day		1,500 µg/l
				Limits--max. concentration			
				60 mg/l			1.5 mg/l

Compliance Data Pt .003

Date (month/year)	Cr^{+6} Daily avg.	Cr^{+6} Daily max.	Cr^{+6} concentration	pH avg.	pH max.
3/78	.002 kg/day	.002 kg/day	.05 mg/l	8.2	8.4
2/78	.003 "	.004 "		8.3	8.4
1/78	.002 "	.003 "		8.3	8.5
9-12/75	.008 "	.012 "	.30 mg/l	7.6	8.4
3- 6/75	.015 "	.030 "	.56 "	8.1	8.7
12/74-3/75	.018 "	.035 "	.68 "	8.4	8.9
9-12/74	.02 "	.034 "	.75 "	8.2	9.0
6- 9/74	.019 "	.038 "	.25 "	7.8	8.2
Special test Oct. 1974	.026 lb/day cadmium	10 µg/l	85 µg/l	9.2	

Compliance Data Pt. .004

Date (month/year)	Flow	TSS		Chromium total		pH	
		Daily avg.	Daily max.	Daily avg.	Daily max.	Avg.	Max.
3/78	.255 MGD	26.70 kg/day	31.13 kg/day	.067 kg/day	.067 kg/day	8.0	8.1
2/78	.270	32.86 "	36.44 "	.09 "	.1 "	8.0	8.1
1/78	.260	26.63 "	33.02 "	.05 "	(.05 mg/l)	7.9	8.0
9-12/75	-	4.10 " (27.1 mg/l)	6.96 "	.04 "	.09 " (.27 mg/l)	7.8	8.4
3-6/75		4.6 " (30.2 mg/l)	7.7 "	.047 "	.095 " (.31 mg/l)	8.1	8.6
12/74-3/75		4.1 " (27.6 mg/l)	6.2 "	.039 "	.077 " (.26 mg/l)	8.3	8.7
9-12/74		4.4 " (28.8 mg/l)	5.5 "	.029 "	.068 " (.21 mg/l)	8.5	8.9
6-9/74		4.78 " (31.6 mg/l)	9.01 "	.029 "	.045 " (.19 mg/l)	7.2	7.9
Special Test Oct. 1974	.136	(1.1--230 lb/day)		.9 lb/day	800 µg/l	(6.7--9.4)	

Limits--max. concentration

60 mg/l 1.5 mg/l

AIRCO ALLOYS
LOUISVILLE, KENTUCKY

Air

The only information in the EPA file is a letter from Thomas P. Summers--chairman, Jefferson County Air Pollution Control Board stating the company was in violation of a Board order and setting a public hearing for May 14, 1973. Airco was ordered to construct pollution control equipment by May 31, 1975.

Compliance records show the plant was in compliance July 18, 1978.

Water

Permit No. KY0001783 (expired)

Airco Alloys, Inc.
P.O. Box 37, Station D
Louisville, KY 40210
500-778-1621

Water

Applicant hooked up to Louisville Municipal Sewage Treatment Plant 6/1/74. Permit expired and was not renewed.

The Plant makes 10,000 tons/mo of calcium carbide via a closed furnace process.

Wastewater: furnaces use cooling tower, water, and have a blowdown of 8-10 gpm.
C_2H_2 compressor seal water is second waste water stream.
Process H_2O recycled (to scrubbers?)

See attached data for original permit application.

PART B DISCHARGE DESCRIPTION

(Note: Submission of Part B is required of all applicants who are also required to submit Part A. Only those parameters specifically indicated in the instructions are to be reported by a particular industry)

(Office use only)
072 - 0YE - 2-000280

Discharge Serial No.
001

B-1. PHYSICAL AND BIOLOGICAL PARAMETERS OF INTAKE WATER AND DISCHARGE (See Table B-1)

Intake		Discharge						
PARAMETER AND CODE	UNTREATED INTAKE WATER (1)	TREATED INTAKE WATER (2)	AVERAGE (DAILY) (3)	MINIMUM (OPERATING YEAR) (4)	MAXIMUM (OPERATING YEAR) (5)	SAMPLE FREQUENCY (6)	CONTINUOUS MONITORING (7)
COLOR 00080	W			X			
SPECIFIC CONDUCTANCE 00095	421		3968	X	X	O	A
TURBIDITY 00070	32		120	X	X	O	A
FECAL STREPTOCOCCI BACTERIA 74054	W			X			
FECAL COLIFORM BACTERIA 74055	W			X			
TOTAL COLIFORM BACTERIA 74056	W			X			
SOLIDS 00500 mg/l	300		1263	X	X	O	A
AMMONIA 00610 mg/l	3.05		19.2	X	X	O	A
NITRATE 00620 mg/l	0.9		0	0	0	0	A

PART B

(Office use only)
072 - OYE - 2 - 000280

Discharge Serial No.
001

B-2. CHEMICAL PARAMETERS OF INTAKE WATER AND DISCHARGE (See Table B-2)

	Intake	Discharge										
PARAMETER AND CODE	(1) UNTREATED INTAKE WATER	(2) TREATED INTAKE WATER	(3) MAXIMUM CONCENTRATION	(4) MAXIMUM POUNDS PER DAY PER PROCESS UNIT	(5) MAXIMUM POUNDS PER DAY	(6) DAILY AVG. CONCENTRATION	(7) AVERAGE POUNDS PER DAY	(8) SAMPLE TYPE	(9) SAMPLE FREQUENCY	(10) METHOD OF ANALYSIS	(11) CONTINUOUS MONITORING
ACIDITY (as $CaCO_3$) 00435	W										
TOTAL ORGANIC CARBON (T.O.C.) 00680	285		80	1570	1570	80	1368	C	O	S	A
TOTAL HARDNESS 00900	150		1000	19680	19680	1000	17107	C	O	S	A
NITRITE (as N) 00615	W										
ORGANIC NITROGEN 00605	7.65		46.54	915	915	46.54	796	C	O	S	A
PHOSPHORUS-ORTHO (as P) 70507	0.9		0.4	7.8	7.8	0.4	6.8	C	O	S	A
SULFATE 00945	190		170	3342	3342	170	2908	C	O	S	A
SULFIDE 00745	0.09		0.27	5.31	5.31	0.27	4.62	C	O	S	A
SULFITE 00740	W										
BROMIDE 71870	A										

PART B

(Office use only)
072 - OYE - 2-000280

Discharge Serial No.
001

B-2. (cont.) CHEMICAL PARAMETERS OF INTAKE WATER AND DISCHARGE (See Table B-2)

Intake		Discharge										
PARAMETER AND CODE	UNTREATED INTAKE WATER (1)	TREATED INTAKE WATER (2)	MAXIMUM CONCENTRATION (3)	MAXIMUM POUNDS PER DAY PER PROCESS UNIT (4)	MAXIMUM POUNDS PER DAY (5)	DAILY AVG. CONCENTRATION (6)	AVERAGE POUNDS PER DAY (7)	SAMPLE TYPE (8)	SAMPLE FREQUENCY (9)	METHOD OF ANALYSIS (10)	CONTINUOUS MONITORING (11)
CHLORIDE 00940	46.8		239.8	4710	4710	239.8	4102	C	O	S	A
CYANIDE 00720	0.01		0.16	3.14	3.14	0.16	2.73	C	O	S	A
FLUORIDE 00951	0.35		0.40	0.78	0.78	0.40	0.68	C	O	S	A
ALUMINUM-TOTAL 01105	40		360	7.09	7.09	360	6.16	C	O	S	A
ANTIMONY-TOTAL 01097	A										
ARSENIC-TOTAL 01002	0.00		0	0	0	0.00	0	C	O	S	A
BARIUM-TOTAL 01007	M				-						
BERYLLIUM-TOTAL 01012	A										
BORON-TOTAL 01022	A										
CADMIUM-TOTAL 01027	<1.6		<1.0	0.02	0.02	<1.0	0.02	C	O	S	A

ENG FORM 4345-1 JUN 71

PART B

(Office use only)
072 - OYE - 2 - 000280

Discharge Serial No.
001

B-2. (cont.) CHEMICAL PARAMETERS OF INTAKE WATER AND DISCHARGE (See Table B-2)

Intake		Discharge										
PARAMETER AND CODE	(1) UNTREATED INTAKE WATER	(2) TREATED INTAKE WATER	(3) MAXIMUM CONCENTRATION	(4) MAXIMUM POUNDS PER DAY PER PROCESS UNIT	(5) MAXIMUM POUNDS PER DAY	(6) DAILY AVG. CONCENTRATION	(7) AVERAGE POUNDS PER DAY	(8) SAMPLE TYPE	(9) SAMPLE FREQUENCY	(10) METHOD OF ANALYSIS	(11) CONTINUOUS MONITORING
CALCIUM-TOTAL 00916	32		186	3660	3660	186	3182	C	O	S	A
CHROMIUM-TOTAL 01034	0.00		0	0	0	0.00	0	C	O	S	A
COBALT-TOTAL 01037	W										
COPPER-TOTAL 01042	W										
IRON-TOTAL 01045	640		260	5.11	5.11	260	4.45	C	O	S	A
LEAD-TOTAL 01051	30		20	0.39	0.39	20	0.34	C	O	S	A
MAGNESIUM-TOTAL 00927	9.6		1.0	19.7	19.7	1.0	17.1	C	O	S	A
MANGANESE-TOTAL 01055	W										
MERCURY-TOTAL 71900	0.8		0.8	0.016	0.016	0.8	0.014	C	O	S	A
MOLYBDENUM-TOTAL 01062	W										

PART B

(Office use only)
072 - OYE - 2 - 000280

Discharge Serial No.
001

B-2. (cont.) CHEMICAL PARAMETERS OF INTAKE WATER AND DISCHARGE (See Table B-2)

	Intake		Discharge								
PARAMETER AND CODE	(1) UNTREATED INTAKE WATER	(2) TREATED INTAKE WATER	(3) MAXIMUM CONCENTRATION	(4) MAXIMUM POUNDS PER DAY PER PROCESS UNIT	(5) MAXIMUM POUNDS PER DAY	(6) DAILY AVG. CONCENTRATION	(7) AVERAGE POUNDS PER DAY	(8) SAMPLE TYPE	(9) SAMPLE FREQUENCY	(10) METHOD OF ANALYSIS	(11) CONTINUOUS MONITORING
NICKEL-TOTAL 01067	W										
POTASSIUM-TOTAL 00937	3.5		7.17	141	141	7.17	123	C	O	S	A
SELENIUM-TOTAL 01147	A										
SILVER-TOTAL 01077	W										
SODIUM-TOTAL 00929	26.00		23.65	465	465	23.65	405	C	O	S	A
THALLIUM-TOTAL 01059	A										
TIN-TOTAL 01102	W										
TITANIUM-TOTAL 01152	50		50	0.98	0.98	50	0.85	C	O	S	A
ZINC-TOTAL 01092	130		80	1.57	1.57	80	1.37	C	O	S	A
OIL AND GREASE 00550	0		0	0	0	0	0	C	O	S	A

PART B

(Office use only)
072 - OYE - 2-000280

Discharge Serial No.
001

B-2. (cont.) CHEMICAL PARAMETERS OF INTAKE WATER AND DISCHARGE (See Table B-2)

	Intake		Discharge								
PARAMETER AND CODE	UNTREATED INTAKE WATER (1)	TREATED INTAKE WATER (2)	MAXIMUM CONCENTRATION (3)	MAXIMUM POUNDS PER DAY PER PROCESS UNIT (4)	MAXIMUM POUNDS PER DAY (5)	DAILY AVG. CONCENTRATION (6)	AVERAGE POUNDS PER DAY (7)	SAMPLE TYPE (8)	SAMPLE FREQUENCY (9)	METHOD OF ANALYSIS (10)	CONTINUOUS MONITORING (11)
PHENOLS 32730	70		< 10	1.38	1.38	< 10	1.20	C	O	S	A
SURFACTANTS 38260	W										
ALGICIDES* 74051	Y*		Y	Y	Y	Y	Y	Y	Y	Y	Y
CHLORINATED HYDRO-CARBONS* (EXCEPT PESTICIDES) 74052	W										
PESTICIDES* 74053	W										

*Name specific compound(s) and fill in the required data for each. Use extra blanks at the end of the form and the "Remarks" space as necessary.

*Y - Indicates laboratory not equipped to test for algicides

PART B

(Office use only) 012 - OYE - 2-000280

Discharge Serial No. 001

B-3. RADIOACTIVE PARAMETERS OF INTAKE WATER AND DISCHARGE (See Table B-3)

Intake	Discharge						
PARAMETER AND CODE	(1) UNTREATED INTAKE WATER	(2) TREATED INTAKE WATER	(3) AVERAGE (DAILY)	(4) MINIMUM (OPERATING YEAR)	(5) MAXIMUM (OPERATING YEAR)	(6) SAMPLE FREQUENCY	(7) CONTINUOUS MONITORING
ALPHA-TOTAL 01501	W			X			
ALPHA COUNTING ERROR 01502	W			X			
BETA-TOTAL 03501	W			X			
BETA COUNTING ERROR 03502	W			X			
GAMMA-TOTAL 05501	W			X			
GAMMA COUNTING ERROR 05502	W			X			
TRITIUM-TOTAL 07000	W			X			
TRITIUM COUNTING ERROR 07001	W			X			

B-4. REMARKS

Q - Sampling Frequency-[illegible].

X - Indicates insufficient information available to give meaningful data.

ENG FORM 4345-1 JUN 71

AIRCO ALLOYS AND CARBIDE
THEODORE, ALABAMA

This plant is not scheduled to operate in 1978 due to high foreign imports of its product (SiMn). It is a totally sealed ferroalloy furnace. EPA has required monitoring reports even when the plant is not operating because of storm runoff from storage piles.

Water Permit

Component	Daily Average	Daily Maximum
Flow		
TSS	299 lbs/day	598 lbs/day
O & G	10 mg/l	15 mg/l
Mn, tot.	59 lbs/day	121 lbs/day
P, tot.	4	9
Cr, tot.	6	11
Cr^{+6}	0.4	1.1
phenols	5.9	8.6
cyanide	<0.02 mg/l	
pH 6-9		

Removed substances to be disposed of in a manner such as to prevent pollutants from entering navigable waters.

Inspection Reports

11/16/77

- East side of company property - Waste slag and H.C. ferromanganese slag stored in open, undiked piles.
- West side of furnace extending to barge loading facility-coke, manganese, and quartz stored in similar manner. Run off observed going into Theodore Barge Canal.
- Process water goes to Dorr-Oliver thickener. A large flow of turbid, unsettled wastewater was going over the weir (sludge rake broken). Normally, clarified thickener overflow goes to a small receiving tank and recycled to the process; a cationic polymer is added to improve settling. The thickener sludge goes to three ponds where the sludge is removed by dragline and carried by truck to area west of company property and dumped. Airco claims no run off from this area. A small package sanitary treatment plant discharges unchlorinated water to the Barge Canal.

3/30/77

Material storage yard run off entering canal from a combination of sources including stock piles. All run off enters through one point.

11/16/76

No impoundment of ores, slag and sludges. Waste pile is close enough to river that intermittent discharge may occur.

All reports above recommended that AWIC staff sample run off and assess impact.

Violation Summary

	TSS, lb/day		pH	Mn, tot lb/day
	Average	Maximum		
10/77	564	1,400	9.4	
11/77		726	9.5	
4-6/77			9.3	
1-3/77			5.9, 9.2	
9/76		1,058		
8/76	826	1,267		
7/76	489	725		139
4-6/76	402	1,143	9.4	
1-3/76	348			
10-12/75	374	795		
7-9/75		992*		
1-3/75		1,976		176
7-10-74				No reports

*Only case where notice of violation sent.

Effluent Data

	Flow, MGD		TSS, lb/day		pH	
	Avg.	Max.	Avg.	Max.	Avg.	Max.
6/77	0.059	0.409	15	280	8.6	9.1
5/77	0.059	0.286	57	456	9.0	9.1
4/77	0.234	0.459	168	394	9.1	9.3
3/77	0.148	0.395	288	553	8.8	9.2
2/77	0.178	0.467	132	263	7.9	8.9
						min. 5.9
1/77	0.03	0.288	3	7.9	7.7	8.1

	Mn		P		Cr, tot		Cr^{+6}		Phenol		Cyanide
	Avg	Max	Avg	Max	Avg	Max	Avg	Max	Avg	Max	
4-6/77	14	39	0.16	0.44	0.02	0.07	0.01	0.03	-		<0.02
1-3/77	24	94	0.13	0.23	0.14	0.55	(<0.01 mg/l)		(<0.01 mg/l)		<0.05 mg/l

AIRCO CARBIDE
CALVERT CITY, KENTUCKY

W. D. Collie, Plant Manager NPDES KY0003549(3514)
Permit effective 2/13/75 -- 7/13/80

Violation Summary

1-78 Dissolved oxygen low
2-78 " " "

Only discharge is non-contact cooling water. Discharge to Tennessee River

Permit
Until 6/30/76

	Daily Avg.	Daily max.	Continuous monitor
Flow			
temp °C			
BOD_5	386 lb/day	428 lb/day	1/wk. 24 hr. comp.
TSS	1,544	1,711	" " " "
D.O.	5.0 minimum		1/wk. Grab
pH	6-9		Grab 1/wk.

after 6/30/76

*			
*BOD_5 (mg/l)		10	1/mo. 24 hr. comp.
TSS		10	1/wk. " " " "
D.O.		5.0 min.	1/mo. Grab
pH	6-9		

*allows 10 mg/l increase over background

Required to have preliminary plan by 6/30/75
Full compliance by - - - 6/30/76

		May 1978	April	
Flow		1.0186 MGD	1.469	typical back to 1/76
temp		80° F		
BOD_5	inlet	1.67	4.9	
	outlet	3.67		
TSS	inlet	18	13.5	
	outlet	20		
D.O.		6.2		
pH		7.9	7.8	

March 21-22, 1978 composite (mg/l)

Zn	Cr^{+6}	Cd	Cu	Ni	Pb	Fe	Mn
.228	.030	.004	.042	.064	.042	.588	.066

Only manufacture CaC^2

Unpermitted discharge noted 8/14/75
pH 11.6, toc 12 mg/l, BOD_5 3, TSS 407. Brought to Company's attention.

Alabama Alloy Corporation
Woodward, AL 407-0440-2101
H.S. Savage, Jr., Chief Engineer -- 428-1421

This company was formerly owned by Mead Corporation; transferred 8/74. They have tried stainless steel filters in baghouse. These do not work. This plant produces over 900 tons ferrosilicon per month.

The process fumes exit through stacks about 80 feet above grade. The plant operates around the clock, 365 days per year.

Raw material usage is:

14,235 ton/yr	gravel
4,865	coke
4,271	coal
1,424	wood chips
6,745	steel
475	carbon

Yearly production is about 13,000 tons of 50% ferrosilicon.

CHROMIUM MINING AND SMELTING CORPORATION
WOODSTOCK, TENNESSEE

Air

This plant has four furnaces producing FeCr and FeSi. Each furnace is equipped with a heat exchange-Aronetics scrubber system. They have had considerable difficulty with fouling and plugging of the heat exchanger. This reduces the energy available to the Aronetics scrubber and reduces its efficiency.

Correspondence dated October 28, 1977, indicates that the plant is in compliance with regulations for the chrome manufacturing furnaces but not the FeSi. The same letter indicated the FeSi furnace would be shut down due to economic conditions.

1978 Compliance

• to 2-9	in compliance
• to 2-16	out of compliance (refractory being replaced on FCE 25 (100% opacity)
• to 4-16	in compliance
• to 4-25	out of compliance (FCE 22, 75% opacity) FCE 25, 100% opacity)

All furnaces were required to be in compliance by July, 1977.

Furnace 25

18.5 MW - open furnace producing FeSi.

Raw Materials	Max lb/hr	Min lb/hr
Ore	17,250	-
Coal-Coke	3,760	3,950
Gravel	1,670	7,850
Remelts	2,600	-
Wood Chips	-	2,730
Al_2O_3 or Steel	915	940
	26,300	15,470
	CC-70	50% FeSi

Products	Max lb/hr	Min lb/hr
Metal	7,765	3,860
Slag	9,370	-
Remelts	2,600	-
Sludge	410	1,900
	20,095	5,760

Stack particulates 13.2 lb/hr maximum, 5.5 lb/hr minimum.

When the heat exchanger transfers 26×10^6 Btu/hr and produces 400°F water for the scrubber the emissions are about 15 lb/hr. At 18 MW load 25 lb/hr are allowed.

Furnace 21, 22, 23

7.5 MW open - can be used to produce FeCr or 75% FeSi.

When producing 75% FeSi, particulate emissions are about 30.8 lb/hr (scrubber exit 0.214 gr/CF)

9 lb/hr of particulate is allowed.

Raw Material	Max lb/hr	Min lb/hr
Ore	7,400	-
Coke-coal	1,600	1,690
Gravel	590	3,340
Remelts	1,110	-
Wood chips	-	1,160
Al_2O_3 or Steel	178	400
	10,878	6,590

	FeCr	75% FeSi
Products	Max lb/hr	Min lb/hr
Metal	3,240	2,660
Slag	3,920	-
Remelts	1,110	-
Sludge	165	770
	8,435	3,430

Stack particulates 5.5 lb/hr maximum to 2.3 lb/hr minimum.

Chromium Mining & Smelting Corporation (Chromasco)
3328 Fite Road
Woodstock, TN

Source 001 CTW, blowdown, runoff and process wastewater

Permit levels

temp. 35°C/38°C

	Avg	Max
Hexavalent Chr.	.02 mg/l/	.05 mg/l
Total Zn	.05 mg/l/	1.0 mg/l
Settleable Solids	.1 ml/l//	.1 m./l
Resid Cl	.2 mg/l//	.2 mg/l
pH	6-9	

Problem with Cr^{+6} leaching from deposits of low-C ferrochrome slag (not produced since 1966). Cold weather apparently aggravates leaching by breaking up slag and exposing new surfaces.

Rain runoff from approximately 90 acres. No blowdown per se; leaks are enough. They have Aronetic design scrubber on open-type ferroalloy furnaces. As of 10/13/75 were having major problems in operating scrubbers.

Hexavalent Chromium consistently too high. Problem is standards are based on controlling CTW additives. Their problem is leaching from chromium containing slag. EPA has said in last 2 violation reports, "Permit needs modifying to eliminate Cr^{+6} limit".

Typical Data

		1/75-3/75	4/75-6/75	7/75-9/75	10/75-12/75
°F	T	50-80	.65/70/85	75/80/85	35/40/45
mg/l	Cd	<.005-<.01	.005/.01/.02		
	Cr^{+6}	.13-.23	.02/.06/.15	.01/.02/.626	.015/.03/.05
	Tot Zn	.0083-<.003	.12/.58/1.17	.005/.04/.13	.1/.1/.1
	Tot Cyanide	.003-.003	.005/.07/.13		
	Mn	.083-.49	.23/.7/1.40		
	Resid Cl	.15-.2	.05/.18/.35	.05/.05/.05	ml
	BOD_5	.13-25	.8/11.6/21		
mg/l	TSS	10-11	4/82/180		
	Fecal Coliform	<1-<1	210/800/2400		

ml/l	Settleable Solids	.05-.05	.05/.58/1.0	<.05/.06/.1	ml
mg/l	Cu	.024-.046	.03/.03/.04		
mg/l	Fe	.54-.79	?/.65/2.05		
mg/l	Pb	.04-.04	.022/.54/1.53		
mg/l	pH	8.35-8.5	7.3/8.2/9		
	Flow		50/66/90 (gpm?)	60/78/75	50/63/90

(Hexavalent Chromium Data)

DATE	Cr^{6+} (mg/l)	FLOW (gpm)
	Min. Avg. Max	
1/76-3/76	.06/.2/.25	30/50/60
4/76-6/76	.02/.04/.05	20/23/25
7/76-9/76	.02/.04/.05	20/50/100
9/76-11/76	.025/.025/.025	100/110/120
12/76-2/77	.02/.15/.33	46/15/100
3/77-5/77	.02/.04/.08	40/71/120
6/77-8/77	.02/.03/.05	90/103/120
9/77-11/77	.03/.04/.05	90/96/100
12/77-2/78	.05/.13/.17	120/130/140
3/78-5/78	.025/.17/.44	NOT PROVIDED

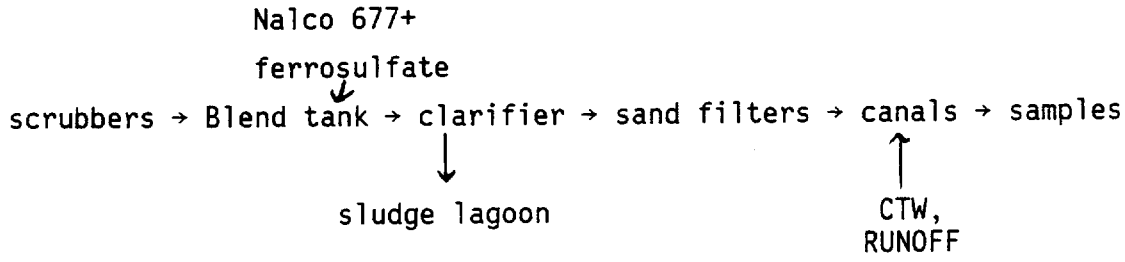

CHROMASCO

FLOW DETERMINATIONS

DISCHARGE DITCH

DATE 7-13-77 TIME - 1445 WIDTH OF DITCH - 42"

Distance from Right Bank -	0	6"	12"	18"	20"	30"	36"	42"
Depth -	0	0.3-1/8"	4-5/8"	4-3/4"	4-7/8"	5-1/8"	3-1/2"	0

Time of Flow (10Ft.) - 21.6, 21.3, 22.7, 21.8 sec. (Ave.--21.9)

DATE 7-13-77 TIME - 2345

Distance from Right Bank - Not measured

Depth - Not measured

Time of Flow (10 ft.) - 19.1, 16.5, 16.6, 15.2 sec.

DATE 7-14-77 1445 WIDTH OF DITCH - 38-1/2"

Distance from Right Bank -	0	6"	12"	18"	24"	30"	36"	38-1/2"
Depth -	0	3"	4-1/8"	4-1/4	4-3/8"	4-3/8	1-5/8"	0

Time of Flow (10 Ft.) - 24.4, 24.2, 21.3, 23.0 sec. (AVE.-23.2)

NNESSEE DEPARTMENT OF PUBLIC HEALTH

FICE CORRESPONDENCE

FROM	TO	DATE

TE: August 31, 1977

: File

OM: Jere Bowen III

BJECT: Recon Inspection; Chromasco, Shelby County

On August 10, 1977, I conducted an inspection of the wastewater discharge from Chromasco in Shelby County. The purpose of this inspection was to determine the current status of the discharge and to update information for our files.

The following is a breakdown of the wastewater discharge from Chromasco:

Four hundred gallons per minute maximum/three hundred gallons per minute average wet scrubber wastewater.

Twenty gallons per minute uncontaminated cooling water. At the present time Chromasco is also recycling five thousands gallons per minute of uncontaminated cooling water.

I was told that at the time of our last compliance monitoring that the wet scrubbers which account for the majority of the wastewater discharged from the plant were not in operation. Therefore the water which was being discharged from the plant at that time was cooling water and ground water drainage from under the plant.

At the time of my visit, only cooling water was being discharged from the plant, therefore no determination could be made as to the quality of the wet scrubber discharge water.

JEB

OM	DATE

JEB/dj

INVESTIGATION OF WASTEWATER DISCHARGE

CHROMIUM MINING AND SMELTING CORPORATION

MEMPHIS, SHELBY COUNTY, TENNESSEE

NPDES PERMIT NO. TN0000183

INVESTIGATORS

The staff of the Jackson Office of the Tennessee Department of Public Health, Water Quality Control, sampled the wastewater discharge of Chromium Mining and Smelting Corporation (Chromasco) during the period of July 13-14, 1977.

MANUFACTURING PROCESSES

Chromasco is engaged in the smelting of chromium ore for the production of ferrochrome, ferromanganese, and ferrosilicon alloys. The company operates continuously and discharges wastewater from scrubber systems, cooling water, and plant drainage.

WASTEWATER TREATMENT

Wastewater from Chromasco, Inc. is treated by precipitation, settling, and filtration prior to discharge. Cooling water is partially recycled. The wastewater is discharged to mile 1.6 of an unnamed stream which is a tributary of the Loosahatchie River at mile 14.3.

WASTEWATER SAMPLING AND ANALYSIS

Laboratory analyses for chromium, zinc, settleable solids, and chlorine residual and pH are performed by Ramcon of Memphis, Tennessee in accordance with Standard Methods for the Examination of Water and Wastewater.

SAMPLING PROCEDURE

On July 13, 1977 at 2:30 p.m., personnel from this Division began a 24-hour composite sampling program of Chromaso, Inc. An ISCO sampler was installed in the discharge ditch approximately one-fourth mile downstream of the plant and was set to obtain a constant-volume sample once each hour. Temperature, pH, and

and dissolved oxygen measurements were acquired three times during the sampling period. One grab sample for oil and grease was obtained approximately 10 hours after the sampling program was initiated. Flow measurements were made twice during the sampling period by determining the cross-section and linear flow of the wastewater discharge.

At the conclusion of the sampling period, the composite sample was collected and a one-liter portion was preserved with five milliliters of concentrated nitric acid for metals analyses. The composite sample for routine and metals were transported in a locked state vehicle to the Division laboratory in Jackson, Tennessee. Routine analyses were conducted by Division personnel in Jackson. The preserved sample for metals analyses was transported by Division personnel to the Division's Central Laboratory in Nashville, Tennessee on July 15, 1977.

DATA

Summary of field data:

	Maximum	Minimum	Average
Flow (MGD)	0.32	0.25	0.28
Temperature (^{o}C)	30.0	23.8	27.9
pH	7.8	7.0	7.3
Dissolved Oxygen (mg/l)	10.0	7.2	8.6

Summary of laboratory data:

	Effluent
Biochemical Oxygen Demand (mg/l)	1.6
Total Solids (mg/l)	398
Suspended Solids (mg/l)	14
Settleable Solids (ml/l)	0.1
Iron (mg/l)	0.470
Manganese (mg/l)	0.270
Lead (mg/l)	0.020
Copper (mg/l)	0.010
Cadmium (mg/l)	0.001
Zinc (mg/l)	11.800
Chromium, Total (mg/l)	0.038
Oil and grease (mg/l)	3

PERMIT STANDARDS

The following are the currently applicable standards for average daily concentration.

	NPDES
Settleable Solids (mg/l)	0.1
Temperature (°C)	35
Chromium, hexavalent (mg/l)	0.02
Zinc (mg/l)	0.5
Chlorine residual (mg/l)	0.2
pH	6.0-9.0

FIELD OBSERVATIONS

Scrubbers were not in operation during the sampling period. (See Recon Memo, Jere Bowen, 9/31/77 at the conclusion of this report.)

SAMPLING PERSONNEL

The following personnel conducted the sampling of Chromasco, Inc. They may be contacted at the Office of Water Quality Control, 201 Watkins Towers, Jackson, Tennessee.

Ben Matthews
Bill Duffel
James Scott
Rudy Collins
Jere Bowen

FIELD DATA SHEET

a Stream CHICKASAW Date 7-13-97 - 7-14-97

ation MEMPHIS, TN Weather PC/HOT

. Reported Flow (MGD) 15 Time Sampling Started 1430

e Sampling Stopped 1430 Total Flow During Sampling Period

pling Parameters pH, TEMP, FLOW, D.O.

e	Sampler	Temperature	Flow	pH	THIO FACTOR = 1.00 D.O. Bottle No.	ml $Na_2S_2O_3$	ppm D.O.	Chlorine Residual ml KIO_3	Chlorine Residual ppm Cl_2	Comments
:0	RWM, WCD, RWC	30.0°C.	0.50 cfs	7.1	1	9.8	10.0			FLOW MEASURED BY CROSS-SECTIONS
:C	RWC, JWS	23.8		7.8	279	7.1	7.2			
0	RWM, JFB	30.0	0.38 cfs	7.0	101	8.3	8.5			

CLIMAX MOLYBDENUM, DIVISION OF AMAX, INC.
LANGELOTH, PENNSYLVANIA

Alumino-thermic process

The plant operates six primary metal zinc reducing furnaces, six Herreschoff roasters and a molybdenum sulfide kiln. The plant is presently in compliance with all regulations.

All furnaces were installed in 1941. Cyclones and electrostatic precipitators were installed on all furnaces between 1942 and 1958. The exhaust gas volume from each furnace is 12,000 SCFM. Under normal operation each furnace emits about 1.7 lb/hr of particulate matter and up to 2.7 lb/hr during peak loading. Each furnace processes 835-1,250 lbs/hr raw materials.

The primary metals storage bin processes 1,670 lbs/hr. Exhaust gas is 800 SCFM. Control type not given.

The primary metal melting area handles 3,680 lbs/hr normally and 5,940 during peaks. Exhaust gas flow is 60,000 SCFM. Control type not given.

CLIMAX MOLYBDENUM COMPANY
LANGELOTH, PENNSYLVANIA

Water Discharge

Permit PA 4219 effective July 1, 1977 through February 21, 1981.

Type	30 day average mg/l	30 day average lb/day	daily maximum mg/l	daily maximum lb/day
TSS	30	23.5	60	47
Fe	4	3	7	5.5
Mn	1	0.8	2	1.6
Mo	24	18.8	48	37.6
Pb	-	-	0.05	0.04
Zn	1.5	1.2	3	2.4
Ni	1	0.8	2	1.6
Ag	0.1	0.08	0.2	0.16
As	0.1	0.08	0.2	0.16
Se	2	1.6	4	3.2
O + G	15	11.8	30	23.5
Settlable solids	0.1		0.2	
pH	6-9			

Historical Data

Dishcarge point 001 contains: direct and non-contact cooling water, cooling tower blowdown, small heating and process boiler blowdown, process area wash downs from production of molybdenum compounds, cleaning of roaster gases from production of molybdic oxide, cooling tower blowdown from SO_2 control, incidental storm water.

Discharge point 101 is the acid plant which empties into 001.

Products:

132.5	tons/day	Molybdic oxide equivalent
240	ton/day	Sulfuric acid

Water uses:

297 MGD	All Municipal
226 MGD	Non-contact cooling
6.2 MGD	Boiler feed
46 MGD	Process water (contact cooling, etc.)
10 MGD	Sanitary
8.8 MGD	Other

May 31, 1978--The company was sent a non-compliance notification. The company uses a Rotoclone air cleaning device which has given a lot of trouble. They are installing a sedimentation-separation device to eliminate this problem (construction to be completed 7/15/78).

May, 1978

Discharge point 001

Source	Kg/d Min.	Kg/d Avg.	Kg/d Max.	concentration, mg/l Min.	concentration, mg/l Avg.	concentration, mg/l Max.
Flow	0.063	0.130*	0.275* MGD	-	- *	- *
TSS	20.1	55.4*	118*	84	98.5*	113*
Mo	3.3	8.9*	19.0*	13.6	15.9	18.2
Fe	0.6	1.6	3.7	2.3	2.9	3.5
Zn	0.14	0.41	0.9	0.6	0.7	0.9
Mn	0.04	0.12	0.26	0.2	0.2	0.3
pH, standard units				6.6	7.4	8.5
Settleable solids				0.1	0.4*	0.6*
O + G	1.4	3.5	6.7	6.0	6.2	6.4

*Violations of permit conditions

April, 1978

out of compliance on following parameters:

	Min.	Avg.	Max.
TSS, mg/l	73	77*	81*
TSS, kg/d	11.8	22.8*	60.8*
Fe, kg/d	0.7	1.4	3.4*
O + G, kg/d	1.5	4.0	13.5
Settleable solids, mg/l	0.4	0.5*	0.6*

	Average, kg/d			mg/l		
	1/78	2/78	3/78	1/78	2/78	3/78
Flow	1.01	0.091	0.1 MGD max			
TSS	18.9	11.6	39.3	45	33	102 max
Mo	4.6	2.6	2.2	11	7.5	5.6
Fe	0.7	0.2	1.8	1.7	0.7	4.6
Zn	0.08	0.07	0.11	0.2	0.2	0.3
Mn	0.04	0.04	0.1 max	0.1	0.1	0.1 max
Pb	-	-	0.1 max	-	-	0.11 max
pH	-	-	-	8.7	7.5	7.1
Settleable solids	-	-	0.18 max	0.3	<0.1	0.2 max
O + G	0.7	1.2	4.8 max	1.6	3.5	5.4 max
Ni	-	-	<0.3	-	-	<0.3
Ag	-	-	<0.01	-	-	<0.01
As	-	-	<0.03	-	-	<0.03
Se	-	-	<0.04	-	-	<0.04 max

April to June 1977--All criteria met except minor violation for TSS average in May.

January to March, 1977--Many violations in February

February, 1977

TSS	118-126
Fe	7.2
Zn	1.9-3.3
Mo	10-13
Mn	0.3

all values mg/l

		pH	Mo	TSS	Fe	Mn	Zn
January	5, 1977	6.3*	6.4	10*	0.8	0.1	0.1
February	19	5.7*	13	126	7.2	0.3	0.5
	22	5.9	7	110	7.2	0.2	3.3
March	24	6.2	13	87	6.1	0.2	0.4
	30	6.6	4	11	0.5	0.0	0.2

April, 1976--Mo mg/l--average 116, Maximum 250

							Avg.	Max.
May	1976	5	8	9	10	11	17	
	pH	5.0	6.4	6.9	7.2	4.9	7.1	
	Mo	147	45	23	34	130	9	65	147

The high molybdenum values were either from the Ammonium Dimolybdate Plant (ADM) or Pure Oxide Plant (non-contact cooling water) which had a common drain. The ADM plant has since been shut down.

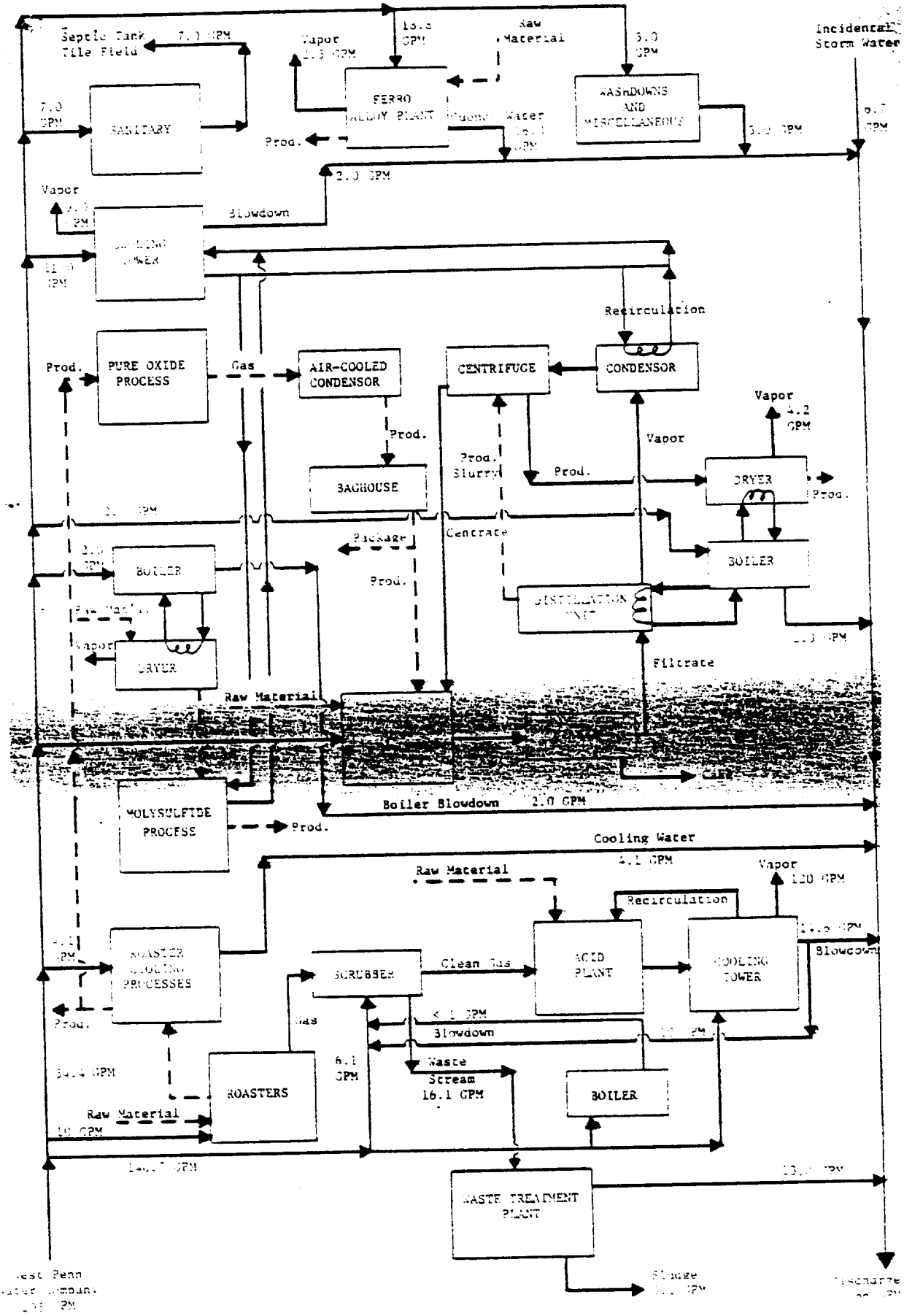

PENN ENVIRONMENTAL CONSULTANTS, INC.
ENGINEERS • CONSULTANTS • LABORATORIES
PITTSBURGH, PENNSYLVANIA 15220

DRAWN	DATE	SCALE
PEC	7-20	None

SCHEMATIC OF WATER FLOW
CLIMAX MOLYBDENUM COMPANY
CANONSBURG, PENNSYLVANIA
WASHINGTON COUNTY
SEPTEMBER 20, 1976

Page 1 of 3

Compliance 001 (lbs/day unless noted otherwise)

Date Mo/Year	Flow MGD	TSS (mg/l) daily avg	TSS (mg/l) daily max	Mn daily avg	Mn daily max	NH_3 daily avg	NH_3 daily max	Chrom total mg/l	ZN total mg/l	pH daily avg	pH daily max
3/78	.220	12	23	23	95	18	66	<1.0	<.1	5.9	7.5
2/78	.252	10	13	28	59	29	62	<1.0	.1→.2	6.0	7.2
1/78	.248	9	10	28	64	33	77	<1.0	<.1	6.2	7.4
12/77	.282	8	10	27	70	30	61	<1.0	<.1	6.3	7.6
11/77	.253	6	8	39	106	28	96	<1.0	<.1	5.9	7.4
10/77	.195	8	9	19	61	19	52	<1.0	<.1	5.9	7.7
9/77	.213	9	10	26	79	21	70	<1.0	<.1	5.9	7.9
8/77	.244	9		24	44	11	19	<1.0	<.1	5.5	7.3
(continues just like this back to 7/74)											
8/74	.230	18 mg/l (35 lb/day)		30		21 lb/day 11 mg/l		0.2 lb/day	90 µg/l 0.2 lb/day	7.0	
chlorine used 1.8 mg/l (3.5 lb/day) BOD_5 7.7 lb/day											

FOOTE MINERAL COMPANY
NEW HAVEN, WEST VIRGINIA

Graham Plant

Air Emissions

On July 28, 1975 the company entered into a Consent Decree specifying compliance by the following dates.

Source		Compliance Date	Comment
FCE #2	54.7 MVA	7/74	
3	13 MVA	4/76	ceased operation 6/75
5	27 MVA	9/73	
6	13 MVA	8/73	ceased operation 6/75
7	10 MVA	9/71	
9	ore-lime melter		
9	Ladle Reactions	9/71	
12		10/73	
13		10/73	
7	New 30 MVA (6/75)	3/76	achieved 1/75
2	tapping fumes	10/75	
5	tapping fumes	9/73	
7	tapping fumes (New FCE)	3/76	achieved 4/76
Alloy Plunging Station		1/76	
Ladle pouring and casting Stations 1-5		4-10/76	#5 achieved 4/76

On January 11, 1974 the plant reported that there is no solid or liquid for waste disposal.

			Raw Materials		Product		Control					5/74
Source	Date installed	Type	Annual tons	Design lb/hr	Annual tons	Design lb/hr	Type	Efficiency	GAS temp. °F	ACFM GAS flow	Allowed Emission lb/hr	Actual Emission lb/hr
FCE #2	7/68	ore reducer	157,500	36,000	52,107	12,440	Baghouse	99+	226	590,000	28.3	<42
3	8/52	"	35,000	7,000	10,395	2,360	NONE	NONE	253	197,000	9	874
5	7/73	"	86,450	21,000	30,368	7,240	Baghouse	99+	491	247,000	16.6	<20
6	7/52	"	50,400	7,000	15,050	3,580	NONE	NONE	244	138,000	11.2	954

above as of 5/74

Baghouses on all furnaces by January 1975.

FOOTE MINERAL COMPANY
NEW HAVEN, WEST VIRGINIA
Graham Plant

Water Discharges

This plant uses baghouses exclusively, therefore, the only water discharges are sanitary (by septic tank) and boiler blowdown, furnace cooling, and surface water which are discharged to a settling pond with final discharge to the Ohio river. Cooling water is treated with phosphate for scale control and sulfuric acid for pH.

Permit effective June 27, 1974 to June 27, 1979 EPA, WV. 000426. State control no. 4693

type	Daily Average	Daily Maximum
TSS	30 mg/l	60 mg/l 90 mg/l in storms
Cr^{+6}		0.05
O + G	10	15
pH	6-9	

Historical Data

Date	Flow MGD	Cr^{+6} mg/l Min.	Cr^{+6} mg/l Avg.	Cr^{+6} mg/l Max.	O + G mg/l Min.	O + G mg/l Avg.	O + G mg/l Max.	Temp °F	pH Min.	pH Avg.	pH Max.	TSS, mg/l Min.	TSS, mg/l Avg.	TSS, mg/l Max.
3/78	0.216	.02	.03	.04	.2	.2	.2	57	8.3	8.4	8.6	35	45*	56*
2/78	0.216	.03	.035	.04	1.4	1.4	1.4	43	8.2	8.3	8.4	22	42*	62
1/78	0.216	.03	.035	.04	.8	.8	.8	38	7.9	8.2	8.4	36	38*	40*
12/77	0.216		.035			1.2		50	8.2		8.4	75	80	85
11/77	0.216		.035			2.6		60	8.1		8.4	20	30*	39.5
10/77	0.216		.04			3.0		61	7.9	8.3	8.6	25	41*	57
9/77	0.216		.03			2.0		76	8.4		8.7	13	35*	57
8/77	0.216		.045			2.4		78	8.1		8.8	24	31*	38
7/77	0.216		.05			2.0		86	7.2		8.7	30	35	40

EPA compliance check April 12-13, 1977--no violations. At the time of this check, the plant was operating at full capacity (20, 24, 35 mw on furnaces). EPA noted that then TSS data was twice the company values (duplicate samples).

Solid Waste

LC FeCr used to be manufactured here. There was (is?) an accumulation of LC FeCr discard slag which is basic dicalcium silicate slag with a small amount of Cr_2O_3 in slag piles, settling ponds, and as a base for raw material storage. In May 1976, the company said they were going to remove the material.

FOOTE MINERAL COMPANY

NEW JOHNSONVILLE, TN 001686

Discharge to Tennessee River - Kentucky Reservoir

Permit Information Effective June 14, 1974 → June 14, 1979

Discharge point 001 contains waste process water, treated sewage effluent and cooling tower blowdown

Limits

	lbs/day		mg/l	
	Daily avg.	Daily max.	Daily avg.	Daily max.
temp			35°C	38°C
BOD_5			30 mg/l	45 mg/l
TSS			30	45
Fecal Coliform			200/100 ml	400/100 ml
Mn Total	50	50		
Ammonia-N	50	50		
Chrom-tot			1.0	1.0
Zn tot			0.5	1.0
Chlorine (residual)			0.2	0.2
pH		6.9		

OTHER INFORMATION

This is an electromanganese metal processing plant - they leach Mn ore then liquid-solid separate-purify the solution and electrodeposit manganese. Daily water intake is 325,000 gallons. The raw water is treated with Nalco 650 and 4AW 366 followed by sedimentation and sand filtration. Cooling water discharges by surface drianage (Nalco 310 added) and contains no chromate or heavy metals.

Process Wastes: Lubrication of Ball Mill bearing and pump seals cleaning cathode and cell frames, cooling and absorption in process.

Domestic wastewater treated separately but merged before discharge (aerobic digestion-extended oreation and chlorination (15,000 gpd) 30-70 employees/shift)

The plant has spray evaporation ponds (holding pond) that are used occasionally.

Seepage from tailings pond diverted back to main pond inlet. There is some subsurface seepage. The ponds are located on river near N. Johnsonville water treatment plant. Occasionally that plant has to shut down due to high manganese levels (up to 4 mg/l).

The industrial waste water receives no treatment.

Production rate: 33,000 lb/day

0.225 MGD Process and Sanitary and Boiler Blowdown (160 gpm)

8/74 Statement

The plant is in compliance on all parameters except chlorine. There are violations noted in the record but these are for only 1-2 days in 3 months; i.e., last quarter 1974--Mn level exceeded only 2 days by total of 26 lbs and ammonia 1 day by--Total discharge for the quarter was less than half of permit limits.

Compliance 001 (lbs/day unless noted otherwise)

Date Mo/Year	Flow MGD	TSS (mg/l) daily avg	TSS (mg/l) daily max	Mn daily avg	Mn daily max	NH_3 daily avg	NH_3 daily max	Chrom total mg/l	ZN total mg/l	pH daily avg	pH daily max
3/78	.220	12	23	23	95	18	66	<1.0	<.1	5.9	7.5
2/78	.252	10	13	28	59	29	62	<1.0	.1→.2	6.0	7.2
1/78	.248	9	10	28	64	33	77	<1.0	<.1	6.2	7.4
12/77	.282	8	10	27	70	30	61	<1.0	<.1	6.3	7.6
11/77	.253	6	8	39	106	28	96	<1.0	<.1	5.9	7.4
10/77	.195	8	9	19	61	19	52	<1.0	<.1	5.9	7.7
9/77	.213	9	10	26	79	21	70	<1.0	<.1	5.9	7.9
8/77	.244	9		24	44	11	19	<1.0	<.1	5.5	7.3
(continues just like this back to 7/74)											
8/74	.230	18 mg/l (35 lb/day)		30		21 lb/day 11 mg/l		0.2 lb/day	90 µg/l 0.2 lb/day	7.0	
chlorine used 1.8 mg/l (3.5 lb/day) BOD_5 7.7 lb/day											

	State limits			NDDES	
		Avg	Max	Daily Average	Daily Maximum
Flow	0.25 MGD				
BOD_5	7.9 mg/l			30	45
TSS	15			30	45
Fecal coliform	2/100			200	400
Mn	14-2			50	50
NH_3-N	36			50	50
Cr_{total}	0.193			1	1
Zn_{total}	0.045			0.5	1
Cl_2, Resid	--			0.2	.2
pH	7.1			6-9	
TDS	--	500	850 lbs/day	--	
Settleable solids	0.05	0.1	0.1	--	
Cμ				0.025	
Sludge disposal method		no entrance to surface water			note discharge of leachate

12/7/76 Holding pond samples

Sump below tailing pond dike	manganese		636 mg/l
	NH_3		248
Waste holding pond	manganese	NH_3	3,400 mg/l
	NH_3-N		1,950 mg/l

MOLYBDENUM CORPORATION OF AMERICA
WASHINGTON, PENNSYLVANIA

Alumino-thermic Process

The company entered into a Consent Decree on June 24, 1976 to achieve full compliance by December 31, 1978 for the following sources:

1. Multiple hearth roasters (2)--Violates particulate and SO_2 regulations.
2. Expand Hydrometallurgical process to 3,000,000 lbs/year molybdenum oxide and install baghouse. The pyro-Metallurgical process is being phased down to small production.

Previously this plant manufactured ferrocolumbium alloy and dumped a 1% by weight thorium waste on plant property. Molybdenum Corporation has Nuclear Regulatory Commission permission to store this waste. Molybdenum Corporation also dumps slag from molybdenum reduction in their parking lot under a Pennsylvania DER permit.

Source	Installed	Material Processed lb/hr Normal	Material Processed lb/hr Peak	Exhaust Flow SCFM	Type Control	Stack TESTS Particulates lb/hr Avg.	Stack TESTS Particulates lb/hr Max.
Molybdenum Roaster	1931	1,160	1,390	22,000	cyclone and High draft scrubber	1.6	1.9
Molybdenum Roaster	1932	930	810	15,000	cyclone and Low draft scrubber	4.0	4.6
Electric arc--Primary metal melting	1925	40		3,000	Baghouse	-	-
Alumino-thermic smelter	1936	1,250		50,000	High draft scrubber	-	-

NEW JERSEY ZINC COMPANY, PALMERTON, PENNSYLVANIA

On March 14, 1978, a Section 114(a)(2) forced inspection letter was issued. Result of the inspection was not in file.

A December 8, 1975, EPA Memo about the waste building and the French process said the French process was not included in the company cleanup and had violated mass emission regulations.

A Consent Decree was issued to NJZ (Division of Gulf and Western Industries) on November 30, 1976 (Part II) requiring compliance by the following dates.

1.	Oxide West Railroad Car Unloading	2/16/79
2.	Slab Zinc refractory drying Kiln	12/30/78
3.	Field Zinc reduction station	7/1/77
4.	Slab Zinc 70 ton Casting Pot	12/30/77
5.	Roaster - SO_2 emissions	4/3/78
6.	Sinter plant SO_2	11/1/76
7.	Waelz Crusher - Fugitive	11/30/76
8.	French Process	a) Operate with control equipment b) Use baghouse if lack occurs c) Leak not to exceed 20% opacity over 3 minutes in any one hour d) Series of staged fines for leaks, must shut down if leaks more than 14 hours.
9.	Vertical retort battery stack emission	12/1/78
10.	Refining stack emissions	1/1/77
11.	American process oxide furnace	Compliance timetable not definite. Should achieve about 1980.

NEW JERSEY ZINC CO., PALMERTON, PENNSYLVANIA

WATER DISCHARGES

General Information

This plant has consistently appealed discharge regulations and requested adjudicatory hearings. Most of NJZ's problems of compliance with discharge point 004 (ferroalloy production) appears to be traceable to the Waelz Kilns which cause high values for Zn, Mn, and pH.

The plant produces 325 ton/day of zinc, zinc oxide (155 ton/day); brass, bronze, copper powder (7.0 ton/day); and spiegeleisen (60 ton/day). They also produce 460 ton/day sulfuric acid and generate 160 ton/day of steam. There are six discharges to Aquashicola creek (001-006) and three discharges to Lehigh River (007-009). The effluent contains process wastewater, noncontact cooling and storm water. Wastewater treatment is neutralization, thickening, and settling.

	Permit - PA 12751 July 1, 1976 → expiration	
004		
Zn (net)	0.3	0.6
Fe (net	1.5	3.0
TSS (net)	15	30
O&G (net)	10	10
Mn	0.5	1.0
pH	6.0-8.5	

In addition to the above, state regulations require dissolved oxygen 5 mg/l average, 4 mg/l minimum, maximum temperature 87° F or not to exceed 5° F rise above ambient.

Coliform	1000/100 ml	May 15 to September 15
	5000/100 ml	September 16 to May 15
Iron (total)	1.5 mg/l	
Dissolved solids	500 mg/l average	

In the attached Table - Criteria, the interim values are net but final standards are total discharge. Interim values are good until 7/1/76. Status of final standards is not clear due to appeals by NJZ.

Effluent data are not complete since NJZ refused to submit monitoring records while regulations were under appeal.

Discharge point 004, all values average mg/l unless otherwise noted.

Date	pH	Flow	Zn	Cd	Mn	TSS	Fe	O & G
3/78	9.2[a]	720 gpm	0	0.27*	0.68*	17.8*	0.62*	1.45*
2/78	9.5*[a]	720	0.3	0.016	0.26	7.0	0.2	0.2
			No data due to appeals					
6/77	10.0[a]		0.27		2.45[a]		1.45	
5/77	10[a]		0.63[a]		7.3[a]		0.42	
4/77	7.9		0.62[a]		1.5[a]		1.13	
3/77	8.9[a]		1.24[a]		2.3[a]		1.37	
2/77	8.7[a]		0		0.96[a]		0.57	
1/77	10[a]		0		1.51[a]		1.04	
12/76	9.5[a]		0		1.69[a]		0.66	
11/76	10.0[a]		0.1		0.35		0.21	
10/76	9.0[a]		0.42		1.47[a]		0.57	
9/76	9.0[a]		0		0.58		0.22	
8/76	8.5		0		1.53[a]		0	
7/76	10[a]		.82[a]		0.44		0.30	
6/76	10.0[a]		0		0.75[a]		0	
5/76	9.8[a]		0		-		0	
4/76	9.5[a]		1.1[a]		0.25		0	
3/76	9.0[a]		0.19		0.59		0.63	
2/76	9.5[a]		0.06		0.47		0.10	
1/76	10[a]		0.93[a]		2.12[a]		0.95	

a - Violation

Borough of [illegible]
Carbon County
New Jersey Zinc Company

TABLE I. CRITERIA

DISCHARGE		TOTAL ZINC Avg	TOTAL ZINC Max	TOTAL LEAD Avg	TOTAL LEAD Max	TOTAL CADMIUM Avg	TOTAL CADMIUM Max	TOTAL IRON Avg	TOTAL IRON Max	TOTAL SUSPENDED SOLIDS Avg	TOTAL SUSPENDED SOLIDS Max	OIL & GREASE Avg	OIL & GREASE Max	OTHER Avg	OTHER Max
1 5.27 (.612)	Interim	9.7		0.60		0.22		0.80		25	30		10*		
	Final	0.30	0.60	0.20	0.40	0.04	0.08	0.50	1.00						
2 0.026	Interim									15	30	10*	15*		
	Final	0.67*				0.01	0.02								
3 0	Interim	2.2								4					
	Final	0.0		No net addition for all pollutants										Total Manganese 0.60	
4 3.2	Interim	0.42								25	30		10*	0.50	1.00
	Final	0.40*	0.80			0.01	0.02	1.50	3.00						
5 1.08	Interim	2.0								20	40		10*		
	Final	1.90*		No net addition of Zn, Pb, and Cd						20					
6 0.561	Interim	6.0		0.05		0.01		1.50		30	30				
	Final	0.3	0.60	0.05	0.10	0.01	0.02	0.50	1.00						
7 0.191	Interim	0.60		0.02		0.01				20	40	10*	10*		
	Final	0.00		No net addition of Zn, Pb, and Cd											
8	Interim														
	Final			This outfall shall discharge only under wet weather conditions										Total Cyanide 0.03	
9 2.16	Interim	7.0		0.20		0.30 0.03		3.50		20	20		10*		0.010
	Final	0.0		No net addition of Zn, Pb, and Cd				0.50	1.00						
0 0.014	Interim	10		0.10		0.50				15	20				
	Final	0.50*	1.00	0.05	0.10	0.01	0.02								
1 0	Interim	0		This outfall shall not contain any process or cooling water											
	Final			This outfall to be discontinued by July 1, 1977											
2 .038	Interim									10	20				
	Final	(0.30)*	0.60	0.05	0.10	0.01	0.02								

CRITERIA

DISCHARGE	TOTAL ZINC		TOTAL LEAD		TOTAL CADMIUM		TOTAL IRON		TOTAL SUSPENDED SOLIDS		OIL & GREASE		OTHER	
	Avg	Max	Avg	Max	Avg	Max	Avg	Max	Avg	Max	Avg	Max	Avg	Max
Interim Final			No net addition of any pollutant											
Interim Final			Shall not contain any process or cooling water											
Interim Final			Shall not contain any process or cooling water											
Interim Final			Shall not contain any process or cooling water											
Interim Final			Shall not contain any process or cooling water											
Interim Final			No net addition of any pollutant											

*Gross Values

1. All values are mg/l.
2. Oil and grease values are gross values.
3. All other values are net values unless otherwise indicated.
4. Values are under dry weather flow conditions.
5. For Discharge 001, the average values are considered as 7-day average values and for the remaining discharges the average values are considered as 30 day average values.
6. Maximum values are those values which are not to be exceeded at any time. ???

Borough of Palmerton
Carbon County
New Jersey Zinc Company

PRELIMINARY
DRAFT

TABLE II - MONITORING REQUIREMENTS (Final Period)

DISCHARGE	SAMPLE FREQUENCY	SAMPLE TYPE	PARAMETERS	DISCHARGE SAMPLING LOCATION (S)
001	1/Week	24-Hour Composite	Zinc, Lead, Cadmium, Iron, and Total Suspended Solids	Outfall 001, and Lagoon Outfall + WATER INTAKE SOURCE
	1/Week	Grab	Oil and Grease	
	1/Week	"1-s"	Temperature	
	1/Week	Measured	Flow	
002	1/Month	24-Hour Composite	Zinc, Cadmium, Iron, and Total Suspended Solids	Outfall 002 + INTAKE H_2O Source
	1/Week	Grab	Oil & Grease	
	1/Month	"1-s"	Temperature	
	1/Month	Per Plant Practice	Flow	
003	1/Month	24-Hour Composite	Zinc, Cadmium, and Total Suspended Solids	Outfall 003 + INTAKE H_2O Source
	1/Month	Grab	Oil & Grease	
	1/Month	"1-s"	Temperature	
	1/Month	Per Plant Practice	Flow	
004	1/Week	24-Hour Composite	Zinc, Cadmium, Manganese, and Total Suspended Solids	Outfall 004 + INTAKE H_2O Source
	1/Week	Grab	Oil and Grease	
	1/Week	"1-s"	Temperature	
	1/Week	Measured	Flow	
005	~~1/2 Weeks~~ 1/WEEK	24-Hour Composite	Zinc, Lead, Cadmium and Total Suspended Solids	Outfall 005
	~~1/2 Weeks~~	Grab	Oil and Grease	
	~~1/2 Weeks~~	"1-s"	Temperature	
	~~1/2 Weeks~~	Measured	Flow	

Carbon County
New Jersey Zinc Company

DISCHARGE	SAMPLE FREQUENCY	SAMPLE TYPE	PARAMETERS	DISCHARGE SAMPLING LOCATION (S)
006	1/Month	24-Hour Composite	Zinc, Lead, Cadmium, Iron and Total Suspended Solids	Outfall 006 / INTAKE H_2O SOURCE
	1/Month	"i-s"	Temperature	
	1/Month	Measured	Flow	
007	1/Month	24-Hour Composite	Zinc, Lead, Cadmium, Iron and Total Suspended Solids	Outfall 007
	1/Week	Grab	Oil & Grease	
	1/Month	"i-s"	Temperature	
	1/Month	Per Plant Practice	Flow	
008	1/Month	Grab	Zinc, Cadmium, Lead, Total Suspended Solids and Oil & Grease	Outfall 003 (During Precipitation Runoff)
009	1/Week	24-Hour Composite	Zinc, Cadmium, Lead, Iron, Total Suspended Solids, and Cyanide	Outfall 009
	1/Week	Grab	Oil & Grease	
	1/Week	"i-s"	Temperature	
	1/Week	Measured	Flow	
010	1/Month	24-Hour Composite	Zinc, Cadmium, Lead and Total Suspended Solids	Outfall 010
	1/Month	"i-s"	Temperature	
	1/Month	Per Plant Practice	Flow	
011	N/A	N/A	This Outfall to be Discontinued by July 1, 1977	N/A
012	1/Week	Grab	Zinc, Cadmium, Lead and Total Suspended Solids	Outfall 012 (When Discharging from Direct Chill Casting Operation)
	1/Week	"i-s"	Temperature	
	1/Week	Per Plant Practice	Flow	

Carbon County
New Jersey Zinc Company

DISCHARGE	SAMPLE FREQUENCY	SAMPLE TYPE	PARAMETERS	DISCHARGE SAMPLING LOCATION (S)
013	1/Month	24-Hour Composite	Zinc, Cadmium, Lead and Total Suspended Solids	Outfall 013
	1/Month	"i-s"	Temperature	
	1/Month	Measured	Flow	
014 through 017	1/Month	Grab	Zinc, Cadmium and Total Suspended Solids	Each Outfall during Precipitation Runoff
018	1/Month	Grab	Zinc, Cadmium, Lead, Total Suspended Solids and Oil & Grease	Outfall 018
	1/Month	"i-s"	Temperature	
	1/Month	Per Plant Practice	Flow	

Notes:

1. For discharge 001 final monitoring requirements apply from August 2, 1978 to expiration date of NPDES Permit.
2. For discharges 008, and 012 through 018 monitoring requirements apply from present to expiration date of NPDES Permit.
3. For remaining discharges, final monitoring requirements apply from July 2, 1977 to expiration date of NPDES Permit.

PRELIMINARY
DRAFT

NEW JERSEY ZINC COMPANY
PALMERTON PLANT

SUGGESTED NPDES RECERTIFICATION

CONDITIONS:

1. The Commonwealth's certification of December 4, 1974, is null and void.

2. The permittee complies with Pennsylvania's Clean Streams Law.

3. That the interim and final effluent limitations specified in Table I (attached) be imposed for outfalls 001 through 018:

   a. the final effluent criteria for outfalls 008 and 012 through 018 apply from the revised date to the expiration date of the NPDES Permit.

   b. the interim effluent criteria apply from the revised date of the NPDES Permit to July 1, 1977.

   c. the final effluent criteria are to be attained by July 2, 1977, for all outfalls with the exception of outfall 001 which is to be attained by August 1, 1978. NOW AS JULY 1, 1977 IS DEADLINE

   d. the effluent criteria specified are under dry weather flow conditions and are net values unless otherwise specified.

   e. with the exception of outfalls 005 and 007, background concentrations for all outfalls under both interim and final conditions are to be determined by samples collected at New Jersey Zinc Company's existing water supply intakes.

   f. for outfalls 005 and 007, background concentrations are to be determined by proportionate samples collected at the appropriate existing water supply intake and (1) for 005 at the terminus of the mountain drainage ditch leading to 005, and (2) for 007 at the terminus of Palmerton Borough's storm sewer.

4. All average values listed in the permit for all outfalls with the exception of 001 are to be based on samples collected over a thirty (30) day period: i.e. a monthly average. For outfall 001, the average value is to be based on samples collected over a seven (7) day period i.e. 7-day average. All maximum values are those which are not to be exceeded at any time.

5. That the monitoring requirements specified in Table II (attached) be imposed under final conditions.

6. That the NPDES Permit expires on December 31, 1978.

7. For final conditions, discharges to the Lehigh River for the period from February 15 to July 31 shall not cause a rise in the stream temperature of more than 5 degrees F above ambient temperature or a maximum of 74 degrees F, whichever is less; not to be changed by more than 2 degrees F during any one hour period: for the remainder of the year, not more than a 5 degree F rise above ambient temperature or a maximum of 87 degrees F whichever is less; not to be changed by more than 2 degrees F during any one hour period.

8. For final conditions, discharges to Aquasicola Creek shall not cause a rise in the stream temperature of more than 5 degrees F above ambient nor change the stream temperature by more than 2 degrees F during any one hour period, nor increase the stream temperature to more than 58 degrees F.

9. The permittee submit to the Department by April 1, 1977, a report on the East Plant's heated waste (thermal) discharges indicating the discharges are in effect complying with, or methods by which the discharges will comply with, by July 1, 1977, the temperature criteria specified for Aquashicola Creek.

10. That the permittee submit to the Department by July 1, 1976, separate and complete industrial waste applications for permits for all the discharges from the East and West Plants respectively.

11. That the permittee completed by September 1, 1976, the installation of the various diversion ditches and drainage facilities as proposed in Appendix B of the report "Palmerton Plant Waste Water Discharges, The New Jersey Zinc Company" dated September 16, 1975 (revised September 26, 1975).

12. That the permittee develop a comprehensive and detailed program for monitoring analyzing, and evaluating the wet weather discharges from outfalls 004, 005, 006, 009, and 015 to develop a data base correlating the quantities of contaminants discharged under wet weather conditions with the runoff flow rate, precipitation rate, and drainage area served by each named outfall. The proposed program shall be submitted to the Department for approval by May 1, 1976. The monitoring and evaluation program shall begin not later than September 1, 1976. The data shall include, but is not limited to, the analyses of samples obtained under both dry and wet weather flow conditions. Samples collected under wet weather conditions shall consist of a minimum of one grab sample every 15 minutes during the first hour of runoff and every 30 minutes thereafter and analyzed for zinc, cadmium, lead and total suspended solids. An interim report on the program including all data shall be submitted to the Department by March 1, 1977, with a final report submitted by September 1, 1977.

The final report shall include the evaluation, including cost data, of ~~primary~~ treatment facilities and/or methods required to reduce the total zinc (gross) in the runoff flow to maximums of 1.5, 1.0, and 0.6 mg/l for all outfalls. The contaminants discharged under wet weather flow conditions in the remaining outfalls shall be estimated using the data obtained for the above named outfalls. Any treatment facilities and/or methods that may be required shall be constructed or installed by ~~August 1, 1978~~ July 1, 1977.

13. We do not certify that the final effluent limitations contained herein will ensure compliance with all of the Federally approved water quality criteria for the receiving stream. We certify that the compliance schedule therein is reasonable. We do not certify that the applicant for an NPDES permit is now in compliance with our effluent limitations or permit requirements established pursuant to the Clean Streams Law, Act of June 22, 1937, P.L. 1987, as amended, 35 P.S. 691.1 or that such source is discharging in compliance with the terms or conditions of a State permit. Nor do we certify that by attaining the interim standards contained in the NPDES permit that such source will be in compliance with the aforementioned Clean Streams Law and the Rules and Regulations thereunder. By certifying the final effluent standards and the schedule for compliance to be contained in the NPDES permit, we do not waive our right to prosecute either civilly or criminally all past, present and future violations of our Clean Streams Law and the Rules and Regulations thereunder. Nor do we waive our right to modify final effluent requirements as is necessary to comply with Pennsylvania Law.

14. This certification by the Department may be appealable to the Environmental Hearing Board, First Floor Annex, Blackstone Building, 112 Market Street, Harrisburg, Pa. (717) 787-3483, by any aggrieved person pursuant to the Act of December 3, 1970, P.L. 834, 71 Pa. Stat. Anno. S 510-1 et.seq. and the Administrative Agency Law, the Act of June 13, 1945, P.L. 1388, as amended 71 Pa. Stat. Anno S 1710.1 et. seq. Appeals must be filed with the Environmental Hearing Board within 30 days of service of this certification unless the appropriate statute provides a different time period. Copies of the appeal form and the Department's regulations governing practice and procedure before the Board may be obtained from the Board.

TABLE 1 - DRAIN DATA

Outfall	Parameter	Effluent Concentration Average mg/l	Effluent Concentration Maximum mg/l	Average Lbs/Day Net	Average Lbs/Day Gross	Maximum Lbs/Day Net	Maximum Lbs/Day Gross
001	Cadmium						
	Total	230	1,100	~~8.97~~ 7.8	9.38	~~44.5~~ 38.9	44.9
	Dissolved	210	1,000	8.16	8.57	40.4	40.8
	Lead						
	Total	240	3,000	~~9.38~~ 7.5	9.79	~~122.0~~ 106	122.4
	Dissolved	180	700	6.93	7.34	28.2	28.6
	Zinc						
	Total	9,800	35,000	~~391~~ 346	400	~~14481~~ 12770	1,428
	Dissolved	5,500	34,000	218	224	1,381	1,387
	Iron (NET)	510	4,250	18.2		151	
	Total	~~490~~	1,160	~~176~~	20.0	~~2911~~	47.3
	Dissolved	90	350	0	3.67	7.2	14.3
002	Cadmium						
	Total	10	--	0	.004	0	--
	Dissolved	10	--	0	.004	0	--
	Lead						
	Total	10	--	0	.004	0	--
	Dissolved	10	--	0	.004	0	--
	Zinc						
	Total	400	700	.06	.14	.17	.25
	Dissolved	350	560	.08	.13	.15	.20
	Iron						
	Total	450	560	0	.16	.04	.20
	Dissolved	100	130	0	.04	0	.05

FROM THE APPLICATION AS REQUESTED BY J.F. SMITH

TABLE 1 - DRAIN DATA (CONTD.)

Outfall	Parameter	Effluent Concentration Average mg/l	Effluent Concentration Maximum mg/l	Average Lbs/Day Net	Average Lbs/Day Gross	Maximum Lbs/Day Net	Maximum Lbs/Day Gross
004	Cadmium						
	Total	10	--	0	.27	0	--
	Dissolved	10	--	0	.27	0	--
	Lead						
	Total	10	--	0	.27	0	--
	Dissolved	10	--	0	.27	0	--
	Zinc						
	Total	530	1,500	8.2	14.1	9	39.8
	Dissolved	170	600	.8	4.5	12.3	16.0
	Iron						
	Total	1,090	4,000	17.0	29.0	9.10	106.0
	Dissolved	250	700	2.0	6.7	13.9	18.6
009	Cadmium						
	Total	20	680	.084	.168	5.03	5.71
	Dissolved	20	110	.084	.168	.84	.92
	Lead						
	Total	70	760	.504	.588	6.30	6.38
	Dissolved	10	100	0	.084	.76	.84
	Zinc						
	Total	5,200	37,000	41.9	43.7	309	311
	Dissolved	4,300	35,000	34.9	36.1	293	294
	Iron						
	Total	4,000	10,500	29.8	33.6	84.4	88.2
	Dissolved	600	2,000	3.5	5.0	15.3	16.8

FIGURE 1
DRAIN 001 ACID DEPARTMENT AREA

NOTE: FLOW IN THOUSAND G/D

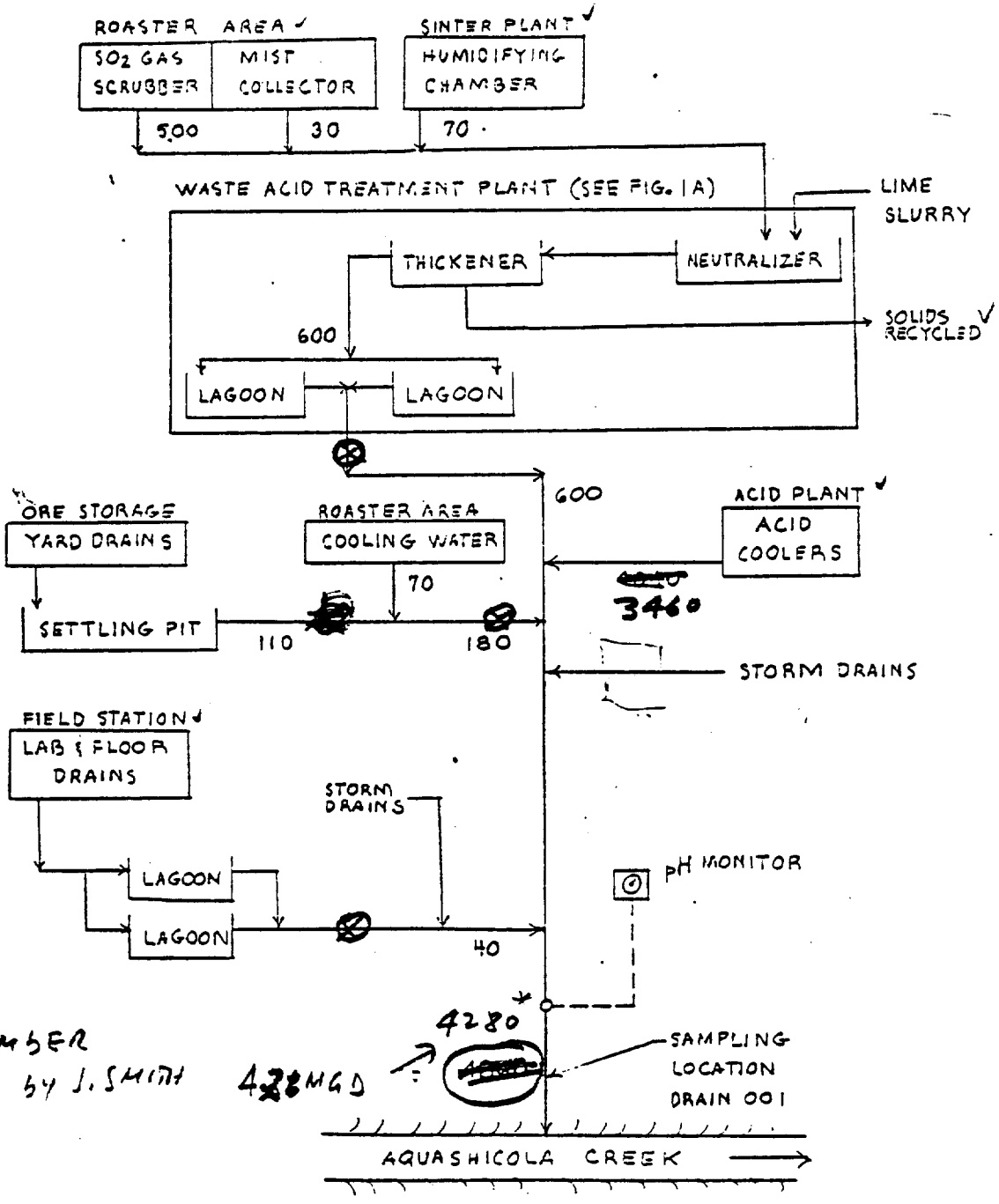

* THIS NUMBER CHANGED by J. SMITH 4/25/78 4.28 MGD

FIGURE 1A
WASTE ACID NEUTRALIZING PLANT

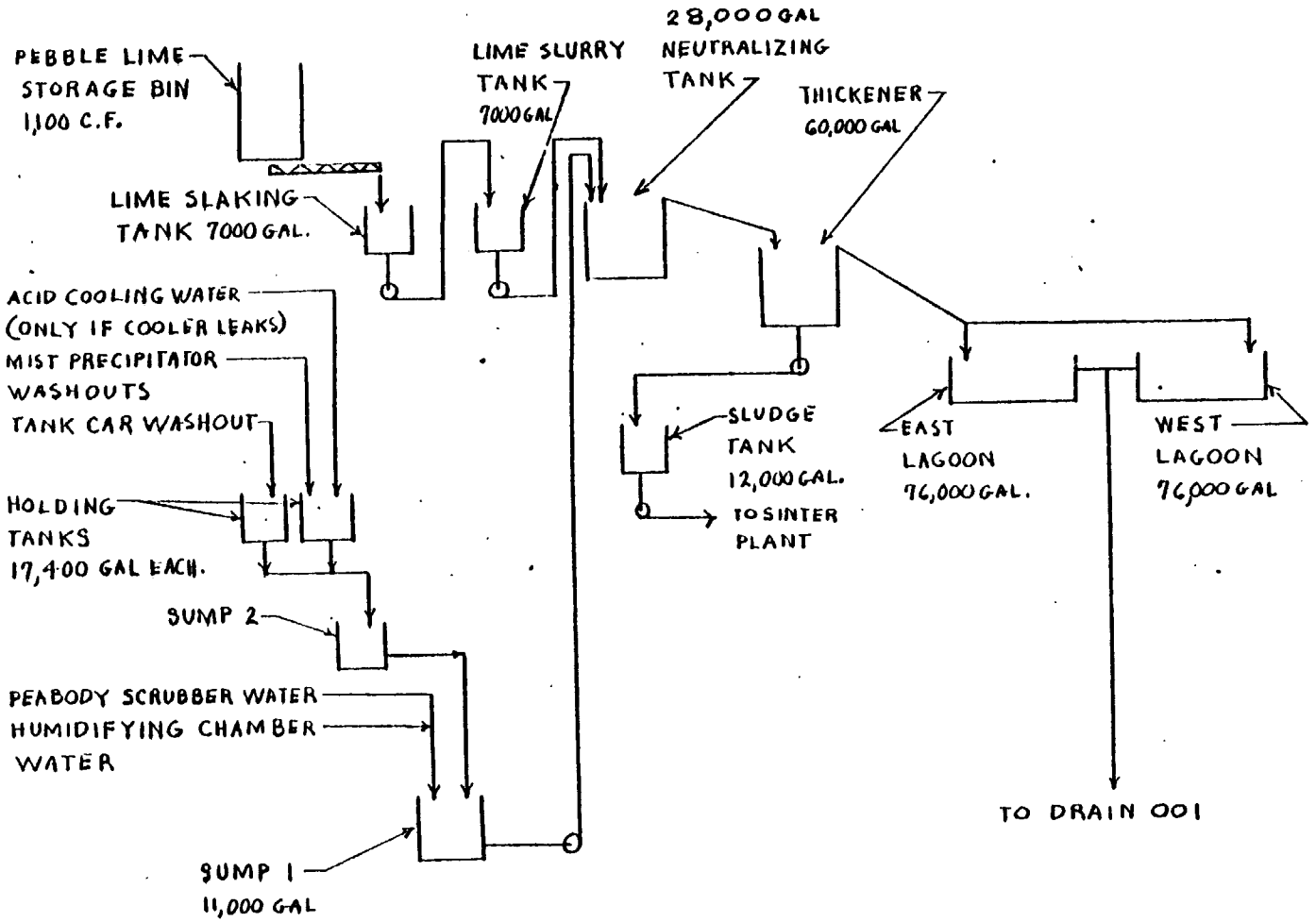

FIGURE 3

DRAIN 004 FERRO ALLOY AREA

NOTE : FLOW IN THOUSAND G/D

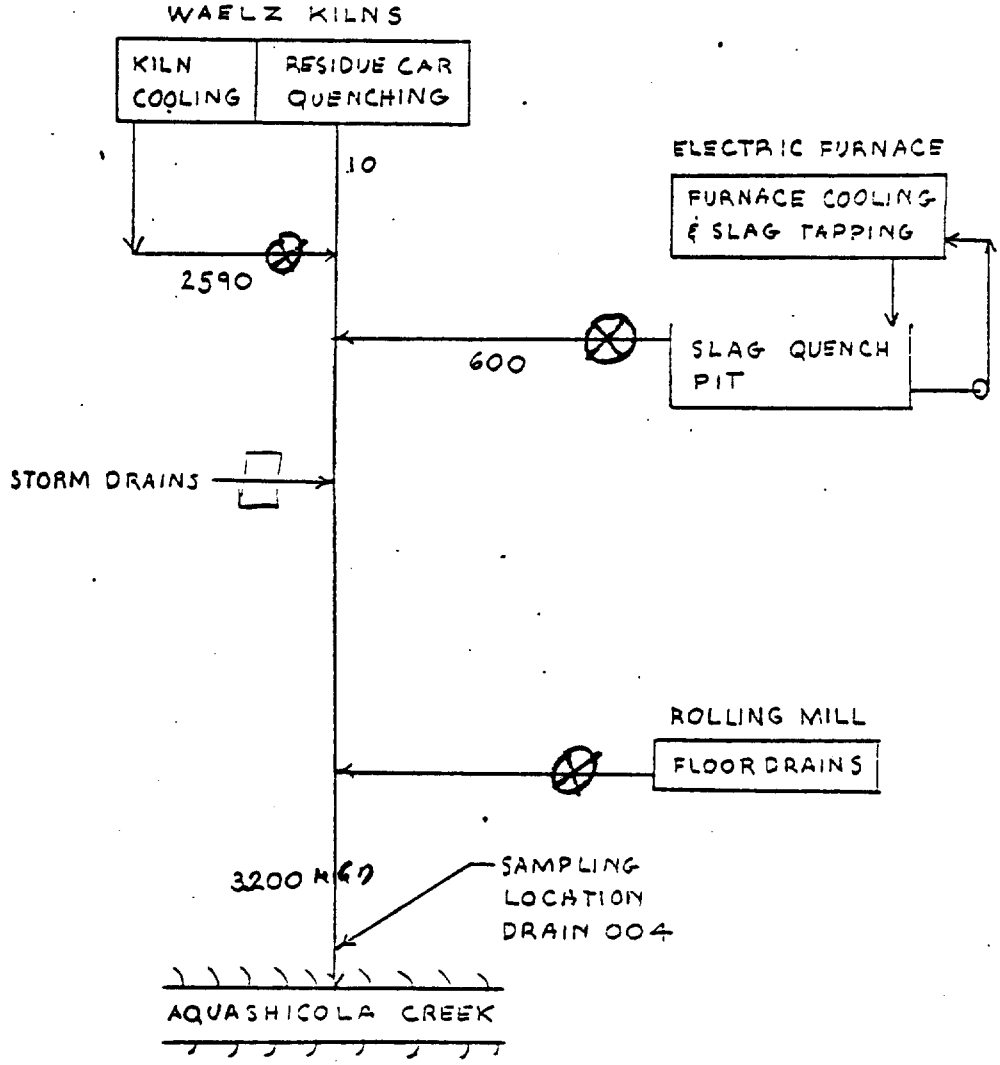

FIGURE 2
DRAINS 002 & 003 · ROLLING MILL AREA

NOTE: FLOW IN THOUSAND G/D

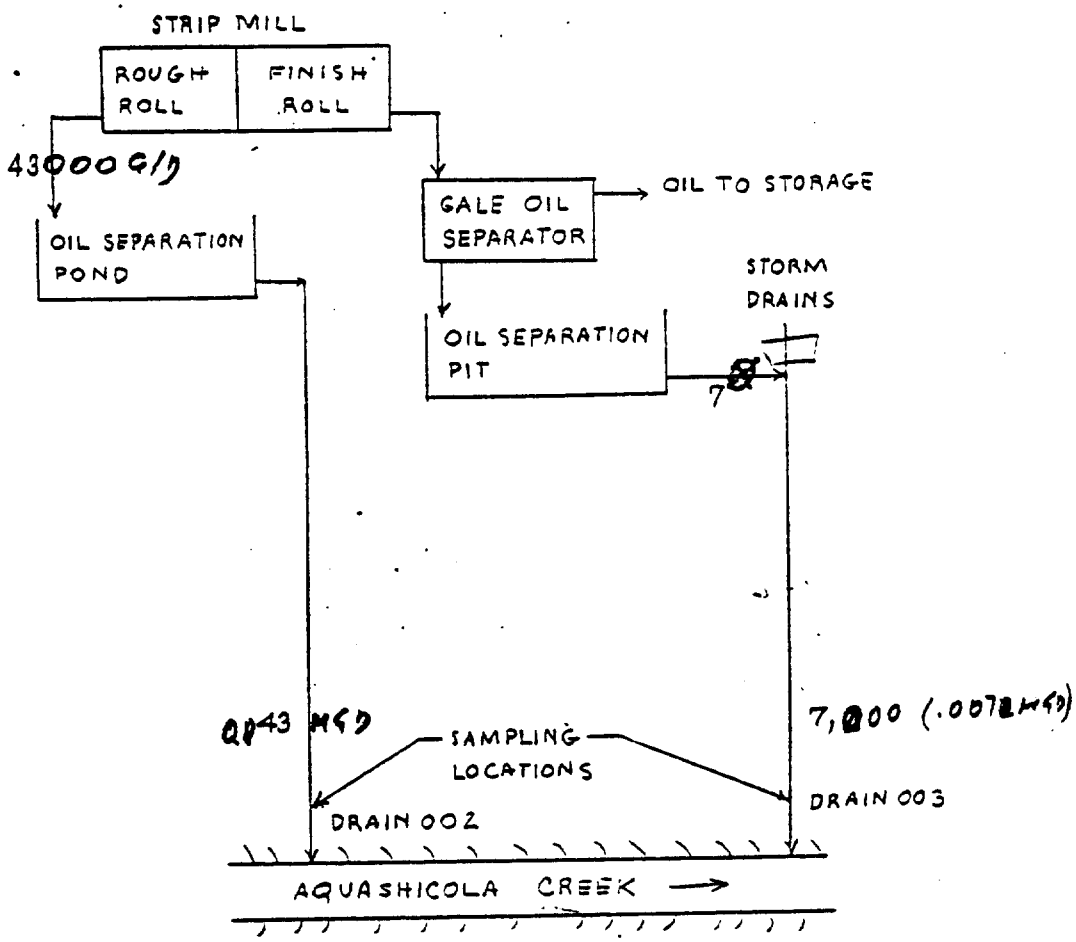

FIGURE 4
DRAIN 007 BOILER HOUSE AREA

NOTE: FLOW IN THOUSAND G/D

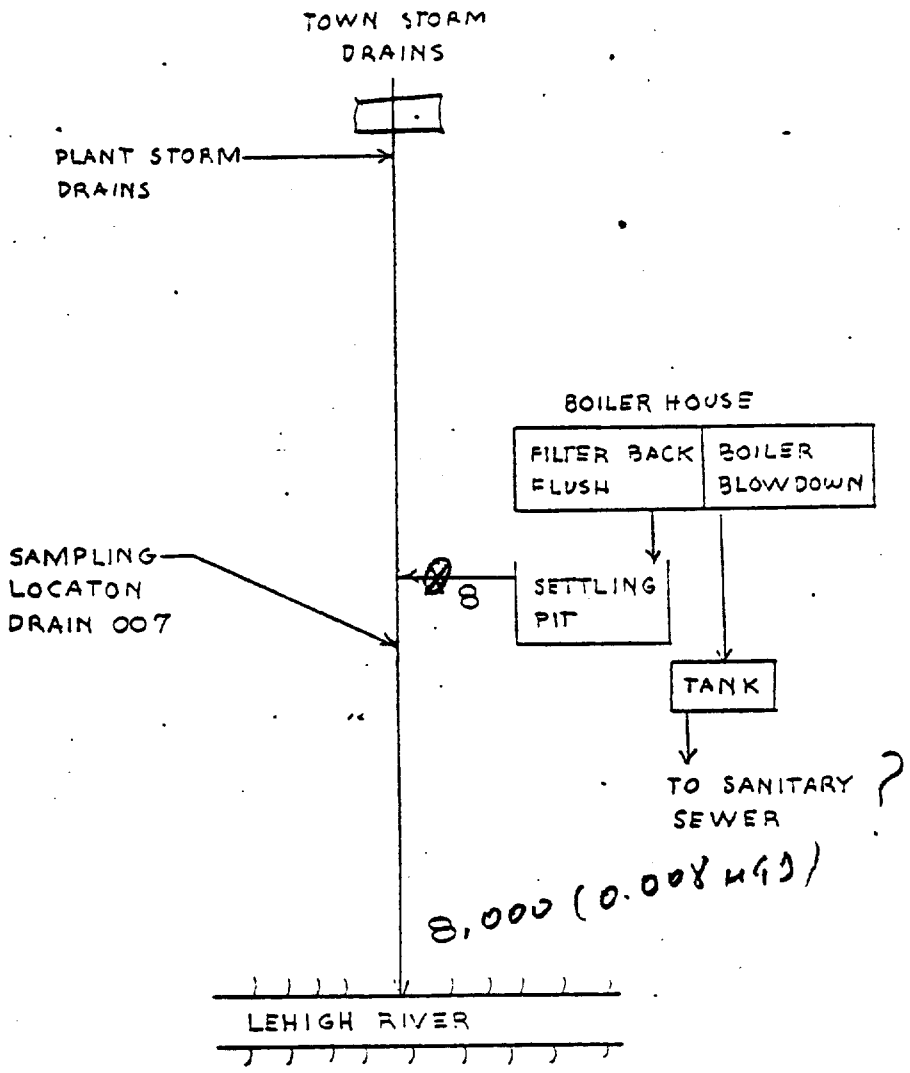

FIGURE 5

DRAIN 009 SLAB ZINC AREA

NOTE: FLOW IN THOUSAND G/D

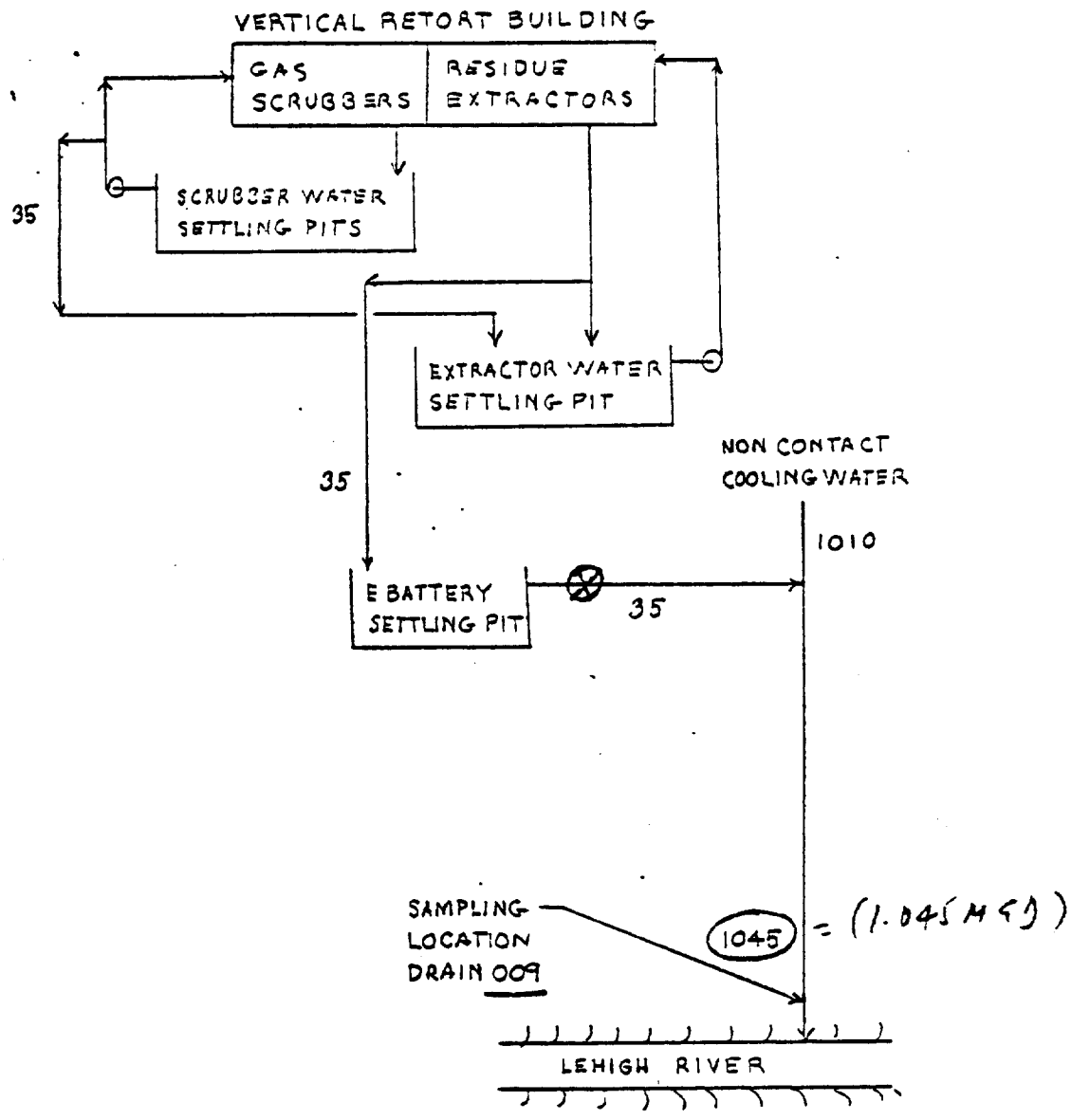

TABLE 2

NOTE: Grab samples are collected three times per year. Parameters recorded are indicated by x.

EPA Drain No. ----------	001	004	006	008	009	Lehigh	Aquashicola
NJZ Drain No. ----------	3	6	24	27	28	River	Creek
Parameters							
Estimated Flow (GPM)	x	x	x	x	x		
Temperature (°F)	x	x	x	x	x	x	x
pH	x	x	x	x	x	x	x
Total Solids At 110°C	x	x	x	x	x	x	x
Suspended Solids At 110°C	x	x	x	x	x	x	x
Zn - Total (mg/l)	x	x	x	x	x	x	x
Zn - Soluble "	x	x	x	x	x	x	x
Pb - Total "	x		x		x	x	x
Pb - Soluble "	x		x		x	x	x
Cd - Total "	x				x	x	x
Cd - Soluble "	x						
Fe - Total "	x	x	x	x	x	x	x
Fe - Soluble "	x	x	x	x	x	x	x
Mn - Total "	x	x			x	x	x
Mn - Soluble "	x	x			x	x	x
CN - Total "		x			x		
Dissolved Oxygen "	x					x	x
C.O.D. "						x	x

TABLE 3

NOTE: Grab samples are collected twice per month. Parameters recorded are indicated by x.

EPA Drain No. ----------	001	009	Industrial	Lehigh	Aquashicola
NJZ Drain No. ----------	3	28	Water	River	Creek
Parameters					
Estimated Flow (GPM)	x	x		x	x
Temperature (°F)	x	x	x	x	x
pH	x	x	x	x	x
Total Solids At 110°C	x	x	x	x	x
Suspended Solids At 110°C	x	x	x	x	x
Zn - Total (mg/l)	x	x	x	x	x
Zn - Soluble "	x	x	x	x	x
Pb - Total "	x	x		x	x
Pb - Soluble "	x				
Cd - Total "	x	x		x	x
Cd - Soluble "					
CN - Total "		x			

TABLE 4 - PAGE 1

Information of Process and Treatment Facilities

A. Operations

Outfall No.	Operation w/ Production (T/D)	Age of the Major Equipment	Process Water (GPM) (MGD) Usage	Process Water (GPM) (MGD) Discharge	Non-Contact Cooling Water (GPM) (MGD) Usage	Non-Contact Cooling Water (GPM) (MGD) Discharge	Intake Source & (GPM) Amount (MGD)
001	Roasting Zinc Concentrates 550 T/D Input	17-27 Yrs.	350	350	50	50	Industrial Water
	Sintering Calcine 450 T/D	17-27 Yrs.	50	50	0	0	---
	Sulfuric Acid Production 460 T/D.	17-27 Yrs.	15	15 415	2800	2800 2810	Industrial & Well Water 3265 (3400)

B. Treatment Facilities

Outfall No.	Type of Treatment	Age of the Major Equipment	Design Capacity (gallon)	Design Flow Rate (g/m)	Capital Cost	Operating Cost	Raw Waste (mg/l)	Effl. Conc. mg/l
001	Lime Treatment for Zn	Neutralizing Tank 21 Yrs	28,000	750	*	*	Zn 1,500	--
		Thickener 21 Yrs	60,000	750	*	*	--	--
		2 Lagoons 21 Yrs	76,000 ea.	750	*	*	--	Zn 2.6
					$194,000 In 1953 (Complete System Cost)	$125,000 In 1973		

370

TABLE 4 - PAGE 2

Information of Process and Treatment Facilities

A. Operations

Outfall No.	Operation w/ Production (T/D)	Age of the Major Equipment	Process Water (GPM) (~~MGD~~) Usage	Process Water (GPM) (~~MGD~~) Discharge	Non-Contact Cooling Water (GPM) (~~MGD~~) Usage	Non-Contact Cooling Water (GPM) (~~MGD~~) Discharge	Intake Source & (GPM) Amount (~~MGD~~)
002	Rough Rolling Zinc - 21 T/D	8-58 Yrs.	30	30	0	0	--
003	Finish Rolling Zinc - 21 T/D	8-58 Yrs.	5	5	0	0	--

B. Treatment Facilities

Outfall No.	Type of Treatment	Age of the Major Equipment	Design Capacity (gallon)	Design Flow Rate (g/m)	Capital Cost	Operating Cost	Raw Waste (mg/l)	Effl. Conc. mg/l
002	Oil Separation	Pond - 30 Yrs	3,000	30	*	*	Oil 100	Oil 10
003	Oil Separation	Gale Oil Separator - 30 Yrs.	--	5	*	*	Oil 5,000	Oil 30
		Separation Pit 30 Yrs.	135	5	*	*	Oil 30	Oil 10
					$2,000 In 1944	$4,100 In 1973		

(Complete System Cost)

TABLE 4 - PAGE 3

Information of Process and Treatment Facilities

A. Operations

Outfall No.	Operation w/ Production (T/D)	Age of the Major Equipment	Process Water (GPM) ~~(MGD)~~ Usage	Process Water (GPM) ~~(MGD)~~ Discharge	Non-Contact Cooling Water (GPM) ~~(MGD)~~ Usage	Non-Contact Cooling Water (GPM) ~~(MGD)~~ Discharge	Intake Source & (GPM) Amount ~~(MGD)~~
004	Waelz Process Zinc Oxide 200 T/D	9-45 Yrs.	0	0	1,800	1,800	Industrial Water
	Sintering Waelz Oxide 200 T/D	38 Yrs.	0	0	0	0	--
	Ferro-Alloy Prod. By Elec. Furnace 60 T/D	13 Yrs.	400	400	0	0	--
				410		1800	2200 (1800)

B. Treatment Facilities

Outfall No.	Type of Treatment	Age of the Major Equipment	Design Capacity (gallon)	Design Flow Rate (g/m)	Capital Cost	Operating Cost	Raw Waste (mg/l)	Effl. Conc. mg/l
004	Solids Removal	Quench Pit 13 Yrs.	122,000	400	$68,000 In 1961	$33,000 In 1973	2,380	780

TABLE 4, PAGE 4

Information of Process and Treatment Facilities

A. Operations

Outfall No.	Operation w/ Production (T/D)	Age of the Major Equipment	Process Water (GPM) (MGD) Usage	Process Water (GPM) (MGD) Discharge	Non-Contact Cooling Water (GPM) (MGD) Usage	Non-Contact Cooling Water (GPM) (MGD) Discharge	Intake Source & (GPM) Amount (MGD)
007	Steam Production 160 T/D	63 Yrs.	35	1.5 (002)	0	0	--
009	Coking Zinc Briquettes - 850 T/D	10-26 Yrs.	0	0	0	0	--
	Zinc Reduction By Vertical Retorts 315 T/D.	12-44 Yrs.	50	50	700	700	Industrial Water

B. Treatment Facilities

Outfall No.	Type of Treatment	Age of the Major Equipment	Design Capacity (gallon)	Design Flow Rate (g/m)	Capital Cost	Operating Cost	Raw Waste (mg/l)	Effl. Conc. mg/l
007	Solids Removal	Back Flush Pit 5 Yrs.	8,200	150	$6,000 In 1969		660	310
009	Solids Removal	2 Scrubber Pits 4 Yrs.	130,000 ea	900	*	*		
		Extractor Pit 4 Yrs.	23,000	200	*	*		
					$216,000 In 1970 (Complete System Costs)	$60,000 In 1973		
		E Battery Pit 24 Yrs.	41,000	200				

OHIO FERROALLOY CORPORATION

BRILLIANT

Air

Main stack opacity July 10, 1974	70-100%
Roof monitor, Main building	50-100%
Estimated emissions 1973	6,888 tons

Water

Aqueous discharges go to Blockhouse Run which empties into the Ohio river.

The only plant discharges are:

001 - Cooling tower blowdown
003 - Laboratory discharge
004 - Non-contact cooling water (from Ball Mill)
005 - Sanitary waste

Limits:

001 - Ph 6.0-9.0 -- no floating or visible solids
003 - TSS 10 mg/l daily average, 15 mg/l daily maximum
004 - pH 6.0-9.0 -- no floating or visible solids
no temperature increase in receiving body
005

	Daily average	Daily maximum
BOD_5	10 mg/l	15 mg/l
TSS	12 mg/l	18 mg/l
Fecal Coliform	200/100 ml	400/100 ml
Cl_2 residual		0.5 mg/l

OHIO FERROALLOY CORPORATION
PHILO, OHIO

This plant is installing baghouses to control their air emissions. The furnaces are of both open and semisealed types producing 50 and 75 percent FeSi, SiMn, and FeMn. In 1975 emissions were 50-70 percent opacity from roof monitors. Compliance action was taken on the basis of smoke reading. No test data were found in the files.

Raw Materials	
Silica gravel	17,000 lbs/hr
Coal	5,950
Coke	2,550
Woodchips	4,250
Steel scrap	8,500
Metal fines	various

On April 18, 1975 the following emission numbers were presented at a conference at EPA Region V headquarters.

Furnace, Common Stacks	Regulation no	Actual Emission, lb/hr	Allowed Emissions, lb/hr
#11, 12, and 13	AP-3-12	67.98	46.89
# 5, 14, and 9	AP-3-12	605.8	36.0
#16 and 18	AP-3-12	2,841	50

Smoke Readings

Source	Date	Number Readings	No. Exceeding 19%	No. Exceeding Rule AP-3-07 (A)(2)
5,9,14 roof Monitor	2-27-75	60	60	60
14,19 roof Monitor	2-26-75	120	120	120
#5 roof Monitor	2-26-75	120	91	79
#16 furnace	2-26-75	120	120	113

OHIO FERROALLOY CORPORATION

PHILO, OHIO

Daily production is 46 tons. Solid wastes go to a company landfill.

Water

- Points 002, 003, 006, 007, 014 are non-contact cooling water. There is no treatment system for these sources. Flows are respectively (in MGD): 0.003, 0.072, 1.37, 1.37, 0.6.
- Points 009, 010, 011 are sanitary facilities which receive aeration, filtration, and chlorination. Flows are respectively in (MGD): 0.003, 0.002, 0.011.
- Point 013 is process water which receives no treatment. Flow is 0.024 MGD, Permit limit is 6.0 lbs/day average and 9.0 lbs/day maximum for TSS; pH 6-9 (30 mg/l and 45 mg/l respectively).
- Points 004, 005, 012 are scrubber water discharges 004, 005 may be eliminated since the plant was planning to go to total recycle.
- Permit limits point 012.

	Daily Average lb/day	Daily Maximum lb/day
TSS	266	531
Mn, tot	53	106
Cr, tot	5.3	10.6
Cr^{+6}	0.53	1.06
pH	6-9	

No self-monitoring reports are in the file.

013

6-8-77 no flow.

No discharge of scrubber water at any time back to 1974 at least.

This plant is constantly out of compliance with sanitary plant treatment system.

Date installed	FCE No	MVA	Product	lb/hr	Raw Material thousand ton/yr	Pollution Equipment	Product ton/yr	Uncontrolled Emissions	Controlled Emissions	GAS CFM	Allowed Emissions lb/hr
	3	12.5		1,500		Baghouse			Estimated		
1955	5		50% FeSi		33.2	Baghouse (common with 14)	13,700	418 lb/hr	62.7 lb/hr	400,000	10.03
	6	25		6,670		Baghouse					
	7	33.6		2,475		Baghouse					
1956	11*		FeMn	7,500	90.9	Research Cottrell Wet Scrubber	29,300	168.75 lb/hr	22.7 lb/hr	97,260	19.7
1956	12*		SiMn	5,800	42.9	Research Cottrell Wet Scrubber	22,000	569.4 lb/hr	22.7 lb/hr	97,260	19.9
1956	13*		FeMn	7,500	90.9	Research Cottrell Wet Scrubber	29,300	168.75 lb/hr	22.7 lb/hr	97,260	19.7
1962	14		50% FeSi		66.4	Hooded, Baghouse	27,400	834			15.96
1968	16*		75% FeSi	7,500	123	Baghouse, Multiclone	28,500	1,181		420,000	24.08
1971	18*	60	50% FeSi	16,600	167	Hooded, Baghouse	62,000	1,660		420,000	29.61
	19		75% FeSi	7,500		Baghouse, Multiclone					
	Crusher and Screens					Multiclone					

*Semi sealed; 11, 12, 13 have movable doors for stoking.

OHIO FERROALLOY CORPORATION
POWHATAN POINT, OHIO

Silicon metal is produced in four furnaces.

Air

FCE	KVA	Raw Material Feed Rate, ton/hr	Metal Produced ton/hr	Control Type	Actual Emissions lb/hr	Allowed Emissions lb/hr
1	12,500	5.87	1,650	Baghouse	1.71	4
2	12,500	5.87	1,650	"	1.71	4
3	12,500	5.87	1,650	"	1.71	4
4	33,600	8.8	2,475	"	2.86	-
Jaw crusher		3.5	7,000	"	6	9.49
crusher and screen		1.25	2,500	"	4	4.76
Total		17.61	7,425	"	17.99	

Raw Materials, average used on FCE 1, 2, 3

Silicon gravel	4,900 lb/hr
Metallurgical coke	2,260
Wood chips	4,150
Petroleum coke	427
Metal fines	various

Air pollution control equipment - 500 HP muliclone rated at 220,000 acfm at 200° C.

OHIO FERROALLOY CORPORATION
POWHATAN POINT, OHIO

Water

This plant has two discharges, both containing sanitary waste. Since dry-type air pollution control equipment is used, there is no discharge from this source.

point 001 Permit limits

	Daily avg.	Daily max.
BOD_5	30 mg/l	45 mg/l
SS	30 "	45 "
Fecal Coliform	200/100	400/100

Date	Flow MGD	BOD_5 mg/l	SS mg/d	pH
9/75	.004	5.6	2	7.4
8/75	.006	3.8	12	7.5
7/75	.003	1.0	22	8.0
6/75	.003	11	15	7.6
5/75	.007	1	57	7.7
4/75	.009	14	38	7.8

These data extend back to early 1974 and all looks about the same. Point 002 is virtually identical to 001.

TENNESSEE ALLOYS
BRIDGEPORT, TENNESSEE

Air

This plant shut down its entire production (three furnaces totaling 26 MW) and was replacing them with a single large furnace. This approach was taken for compliance with air regulations. There was no information in EPA files on the new furnace which was scheduled for completion in August 1977.

Historical Data

The screening equipment uses a baghouse and is in compliance. There are (were) no controls on the furnace gases. All emissions exit through a common roof monitor. All furnaces are submerged arc and produce FeSi.

FCE	Installed	Charge Material	Charge ton/year	Product Rate ton/year	Size MW	Product
1	1968	Rock	50,000	14,000	8.2	75% FeSi
2	1968	Steel Coal	25,000 18,000	14,000	8.2	50% FeSi
3	1970	Coke Wood	8,500 16,800	17,000	9.6	50% FeSi

Particulate emissions (roof monitor) 0.23-0.52 gr/DSCF average 0.37 gr/DSCF. Alabama rules allow 20.75 lbs/hr. The plant was (is) emitting 469 lbs/hr. The produced dust has the following analysis.

Combustibles	7.72%
Fe_2O_3	0.01
Ash	92.3
Ca	1.0
Carbon	5.28
Hydrogen	0.46
SiO_2	90.6

Water

Permit No. TN 0001511

TAC Alloys Division of
International Minerals & Chemical Corporation
Plant Address: Route 2
Jasper, TN 37347
Corporate Address: International Minerals & Chemical Corporation
818 Hamilton National Bank Building
Chattanooga, TN 37402

Have had several problems with State permit: TAC was monitoring in the wrong spot, had not included slurry pond overflow and dust dump area drainage in permit, and in general seemed to have an unorganized effort.

Two sources of H_2O:

001 slurry pond overflow and dust dump area drainage (not monitored!)

002 CT Water and surface runoff

Federal permit is only for source 002. Typical values 1/78-4/78

min	avg	max	
.0039	.0061	.0105	MGD
14° C	18° C	24° C	Temp.
6.7	6.9	7.1	pH

Dust from air pollution control equipment (baghouse) is slurried with H_2O and dumped into settling ponds. H_2O lost via percolation and overflow.

TAC Alloys-Jasper State permit data.

condition (units)	Tenn. Permit 76-19 (Source 001)	1/25/78 Wet Weather Analytical	Tenn. Permit 76-20 (Source 002)	1/25/78 Wet Weather Analytical
pH	6.5-8.5	6.8	6.5-8.5	7.1
settleable solids (ml/l)	0.1	<0.1	0.1	<0.05
dissolved solids (mg/l)	3,000	617	3,000	167
suspended solids (mg/l)	50	65	50	11
BOD_5 (")	15	3	15	2
COD (")	X	42	X	21
Oil & Grease (")	30	<1	30	<1
Fe (")	2.3	7.8	2.3	2.3
Mn (")	1.5	0.550	1.5	0.062
Cr (")	.08	0.011	.08	0.012
Zn (")	.15	0.135	.15	0.076
Cu (")	.03	0.038	.03	0.014
Pb (")	.08	0.120	.08	0.01
Temp. (^oC) (")	X	X	30.5 max	7

UNION CARBIDE CORPORATION

ALLOY, WEST VIRGINIA

In 1973, this plant was putting 100 ton/yr of plant refuse into a company landfill.

On November 24, 1970 the company entered into a Consent Decree specifying compliance by the following dates.

Furnace No.	Compliance Date	
12	4-71	
7	4-71	
19	8-71	
9	7-71	
5	6-72	
34	10-72	
11	1-73	
6	5-73	
Dry Dust Disposal	7-73	
1	8-73	
14	12-73	
2	5-74	(to be replaced by FCE #3)
15	6-74	("Packet" type)
36	12-74	(High energy wet scrubber--90% eff.)
16	1-75	(small single phase--speciality)
13	1-75	(stand by)

FCE #	Date Installed	Raw Materials ton/yr	lbs/hr max.	Product	Control type	Efficiency	Gas temp, °F	Gas Flow CFM, Actual	Allowed Emissions lb/hr	Actual Emissions lb/hr (12/73)	Type
Boiler A					ESP	99.7	510	207,000			
Boiler B					"	"	510	"			
Boiler C					"	"	510	"			
Boiler D					"	"	350	229,000			
5	1955 1972	46,272	11,568	Si metal	Baghouse(a)	99+	350-400	280,000	10.94	11	Open
6	1968 1972	50,100	12,525	"			"	375,000	11.52	11	
7	1937 1971	"	"	"			"	820,000	11.52	11	
9	1961 1971	78,936	19,734	SiMn			400-500	220,000	15.84	10	
3	1974	(EST.) 75,150	(EST.) 18,788	Si metal			350-400	425,000	15.24	17	
12	1940 1969	120,864	30,216	FeMnSi				300,000	22.13	10	
14	1941 1972	50,000	12,525	Si metal				425,000	11.52	1310*	
15	1966 1969	41,672	10,418	CaSi				425,000	10.25	1310*	
16	1941 1965	10,408	2,602	special alloys				-	3.08	300*	
19	1953 1964	185,108	46,277	ore-lime melt			300-350	225,000	29.88	17	
34	1964 1972	83,588	20,897	ore-lime melt			300-400	90,000	16.54	2	
36	1967	87,476	21,869	FeCrSi	High energy scrubber	96	500-600	198,000	17.12	78**	

FCE #	Date Installed	Raw Materials ton/yr	lbs/hr max.	Product	Control type	Efficiency	Gas temp, °F	Gas Flow CFM, Actual	Allowed Emissions lb/hr	Actual Emissions lb/hr (12/73)	Type
C_6 mix system					Baghouse	95			16.54	1	
36 mix system					NONE	NONE			17.12	22	
C_3 Prod. Process					NONE	NONE			23.68	9.9	
C_6 Prod. Process					Baghouse	99			30.09	<0.1	
C7P Prod. Process					Baghouse	99			28.45	<0.1	
C8P Prod.					NONE	NONE			16.0	6.0	
Cx Prod. Process					-	-			13.89	<0.1	

*Emissions to 1 percent of value after baghouse installed.

**Wet scrubber with 99 percent efficiency to be installed.

a.--Tapping fumes to be included in collection system for all furnaces.

Construction completed on schedule and U.C. in compliance.

UNION CARBIDE CORPORATION, FERROALLOYS DIVISION
ASHTABULA, OHIO

AIR

The plant has a semi-enclosed furnace producing 50% FeSi (See EPA 440-/2-74-008 furnace H and related information). Gas cleaning is by a Chemico Venturi scrubber.

July-1972 EMB test 72-PC-14

Scrubber Exhaust

Test No.	East Port		West Port		Average	
	gr/scf	lb/hr	gr/scf	lb/hr	gr/scf	lb/hr
1	0.0877	5.7	0.0444	2.9	0.0660	4.3
2	0.0702	4.5	0.0656	4.0	0.0679	4.25
3	0.0722	4.7	0.0667	4.0	0.0694	4.35
Avg.	0.0767	4.97	0.0589	3.63	0.0678	4.30

There is an ESP at the power station.

EPA has no follow-up information since December 1974.

Point 001 - Settling pond overflow
Flow - 35 MGD
pH - 8.3
temp. °F - 51°-77°

	lbs/day	mg/l
Alkalinity	38,809	133
COD	4,377	15
TS	81,412	279
TDS	74,409	255
TSS	7,003	24
TVS	9,045	31
NH_3-N	72.9	.25
Kjeldall-N	408.5	1.4
NO_3	58.3	<0.2
Phas., tot.	5.83	<0.02

Point 003 - 9/1/71
Flow - 22 MGD
pH - 8.3
temp. °F - 48°-73°

	lbs/day	mg/l		lbs/day	mg/l
COD	3,301	18	Al	617.7	2.117
TS	64,011	349	At	--Absent--	
TSS	4,585	25	As	<3.0	0.010
TOC	4,670	16	Ca	14,590	50
Organic Nitrogen	335.6	1.15	Cr, tot.	8.75	0.030
$S^=$	<29	<0.1	CO	--Absent--	
Cl^-	13,715	47	Cu	26.2	0.090
CN^-	19	0.065	Fe	680	2.331
F^-	204	0.70	Pb	<5	<.0146
Mg	2,920	10	Mn	176	51.3
Hg	<1	<.003	Ni	<29	<.1
K	1,750	6	Na	3,502	12
Sb	--Absent--		Zn	14.6	.050
O + G	408.5	1.4	Phenols	29	0.1
Chlorinated hydrocarbons	--Absent--				

UNION CARBIDE CORPORATION
ASHTABULA, OHIO

Water

Water usage in this facility is complicated since water from the Linde Gas Plant intermingles with the ferroalloy stream. Also 10 MGD of water is exported to Ashco, Inc. and not returned and 2 MGD is imported from SOBIN Chemical Plant.

Contributing Sources:

SIC 3515 - Solids settled, neutralized, decanted to drainage ditch which flows to point 003

SIC 2813 - Cooling water from Linde plant--joins ferroalloy waste in ditch to point 003

SIC 3274 - CaO production (810 tons/day)--scrubber water--settled, neutralized, overflows to drainage ditch 003

SIC 3313 - Ferroalloys (627 ton/day)--thickener underflow from treatment of scrubber water goes to point 001 where it is settled and neutralized. The overflow goes to 003

SIC 2819 - Calcium Carbide (537 ton/day) same as SIC 3313 water from many sources in the Linde plant is used in the ferroalloy plant (electric welding wire, lime manufacture, industrial gases, alkali and chlorine) and all go to point 003

- A total of 20.7 MGD leaves the ferroalloy plant and goes to other facilities and returned to point 003. Process water 12.2 MGD.
- Points 001, 003, 004, 005--cooling water--measured weekly for TSS, TS, TDS. Flow at 001 is 221.7 MGD.
- Point 002 is untreated cooling water and is not sampled.
- The power house produces 3,320,000 kWh/day and batch discharges 250,000 gallons of clarified water from bottom fly ash.
- Scrubber water from ferroalloy production is collected separately from cooler, chemically treated, chlorinated, settled. Thickener overflow goes to 003.

Point 004

	lbs/day	mg/l
Alkalinity ($CaCO_3$)	1,437	115
COD	637.5	51
TS	3,462	277
TDS	2,800	224
TSS	662	53
NH_3	1.25	.10

Permit limits* 001 and 003

	Daily Average, lbs/day	Daily Maximum, lbs/day
TSS	1,815	3,630
CN, tot	16.6	33.2
Phenols (001 only)	18.5	26.7
Cu, tot (003 only)	100	300
pH	6 - 9	

*net above intake

Company Reports

001

Nov. 1976

Flow	11.1 MGD	Temp.	9° C
CN	0.06 mg/l	pH	8.6
Cr, tot	no report	Mn tot	120 µg/l
Phenols	25 µg/l		

December 1976

Flow	11.85 MGD	Temp.	8° C
CN	0.24 mg/l	pH	8.3
Cr, tot	no report	Mn, tot	187 µg/l
Phenols	21 µg/l		

Other General Information

Power usage

Ferroalloy 85.5 MW, CaC_2 52 MW

Submerged arcs, open furnaces, wet scrubbers, baghouses

Chlorination for cyanide control, settling, pH control

Point 001 - 23.4 MGD cooling water and 4.5 MGD process

Point 003 - 20.6 MGD cooling, 2 MGD process, balance from SOBIN chemical.

UNION CARBIDE CORPORATION

MARIETTA, OHIO

Water

Waters from the Ferroalloy Division are so extensively commingled with waters in the Chemicals and Plastics Division that an assessment of the impact of ferroalloy operations cannot be determined from available data.

Settler effluent-point 001 appears to come only from the ferroalloy manufacturing with the following values:

TSS	2,474	lbs/day
Cr, tot	257	"
Mn tot	7,090	"
CN, tot	2.3	"
Phenol	4.6	"
Cr^{+6}	6.5	"
pH	7.0	"

UNION CARBIDE CORPORATION FERROALLOY DIVISION
MARIETTA, OHIO

The plant started operation in 1952.

Air

Total particulate emissions from this plant in 1970-1973 were 830 tons/year. The stacks have bolometer monitors.

Monthly Ringleman Readings

FCE No.	5	6	17	18
'72 Aug.	Down		0.25	0.72
Sept.	Down		0.32	0.76
Oct.	0.08	0.04	0.23	0.45
Nov.	0.07	0.06	0.26	0.56
Dec.	0.13	0.06	0.12	0.40
'73 Jan.	0.11	0.08	0.22	0.50

#18 furnace was sampled November 1972 and found to be in compliance (average particulates 24.6 lbs/hr, allowed 26.5). The scrubber was operating with 70-85 inch W. G. pressure drop and had over 99 percent efficiency.

Furnaces #1 and 12 are open; all others are semi-sealed.

FCE	Product	Air Control Equipment	Fugitive Controls
1	SiMn	Two Research Cottrell scrubbers	Tapping hood--75,000 CFM Fuller Plenum
3	Retired		
4	FeMn (standby)		
5	50% FeSi	Buffalo Forge scrubbers	Tapping hood--baghouse collector
6	FeMn	" " "	" " "
7	Retired	" " "	
9	HC FeCr	" " "	" " "
10	FeCr (standby for 12)	" " "	" " "
12	FeCr	Two Research Cottrell scrubbers	Tapping hood--connected to furnace scrubber
17	FeMn		Tapping hood--baghouse collector
18	FeMn		" " "

Furnace #1 (30 MW) started up in Sept. 1968 and produced 6,000 tons SiMn/month. This open furnace has 50-60 inch W. G. pressure drop. The scrubbers treat 255,000 CFM (620° F), recirculate 1,800 gpm of water and could be heard one mile away.

Union Carbide Corporation, Ferroalloys Division
Sheffield Plant
P.O. Box 391
Sheffield, AL 35660
J. C. Vogelberger, Manager

On 6/20/75 EPA sent a formal "out of compliance" notice to the plant

On 2/10/77 the plant was in compliance.

Air pollution control equipment consists of Buffalo Forge Wet Scrubbers (2 on each furnace). A letter of 5/21/75 said the plant was planning to install secondary hoods over each furnace with final control by a baghouse.

Actual 1971 TPY

Raw Materials	Furnace #1	#2	#3	#4	#5
Quartz	11,295	10,575	15,840	29,340	26,145
Coal	5,271	4,935	7,392	13,692	12,201
Scrap Steel	1,255	1,175	1,760	3,260	2,905
Wood Chips	7,279	6,815	10,208	18,908	16,849
Product					
ferrosilicon	6,010	5,819	8,454	20,622	15,273
Construction Date	1940	1941	1943	1944	1944
capacity	15,000 kn	10,000	15,000	25,000	16,000

The scrubber liquid goes to holding ponds for settling, and the furnace gas goes to flare.

4 semi-enclosed

Union Carbide Corporation
Ferroalloys Division
P.O. Box 391
Sheffield, AL 35660

Permit No: AL0000027

205-383-1441

George Leist - Plant Manager
Donnie Flannigan - Chief of Engineering & Maintenance

Reference made to plant producing 150 TPD of alloy being at 75% capacity.

Permit Levels	TSP	708 lb/d avg.//1417 lb/d max.
	Cyanide	2.5 lb/d avg.// 5.0 lb/d max.
	pH	6.0 to 9.0

Outfall is combination of CT water, sanitary H_2O & process H_2O.

Process H_2O is mainly wet scrubber discharge.

*See attached inspection report for more information.

SUBJECT: Compliance monitoring - Union Carbide Corp., Ferro Alloys Div., Sheffield, AL (Permit No. AL000027) DATE:

FROM: 4ASN:MDLair THRU:BHAdams

TO: 4AE:Paul J. Traina, Director
Enforcement Division

SUMMARY

Attached is the NPDES compliance monitoring report on wastewaters discharged from the subject industry during April 28 - May 1, 1975. The pH of the final effluent (outfall 001) exceeded permit limitations on two occasions during the study. The remaining pollutants investigated were within permit limitations (outfall 001 limits are written on a net basis).

An unpermitted discharge was discovered during the investigation. The water spray used to clean the intake raw water screen is screened and returned directly to Lake Wilson. This low volume discharge was sampled and found to contain approximately the same concentration of total suspended solids as the intake raw water.

ACTION

For your information and/or action deemed necessary.

BACKGROUND

Programmed compliance monitoring commitment for FY-75.

Attachment

INVESTIGATION OF WASTEWATER DISCHARGES
UNION CARBIDE CORPORATION
FERROALLOYS DIVISION
SHEFFIELD, ALABAMA
PERMIT NO. AL0000027

INVESTIGATORS

M. D. Lair of the U.S. Environmental Protection Agency, Surveillance and Analysis Division (US-EPA) investigated the wastewaters discharged from the Union Carbide Corporation's Ferroalloys Division plant at Sheffield, Alabama, during April 28 to May 1, 1975. Mr. Lair was accompanied by Messrs. Carl Nelson and Lyle Crosley of the Alabama Water Improvement Commission (AL-WIC) on April 28 and April 29 to May 1, respectively.

The investigators met with Messrs. J. S. Volgelberger, Plant Manager, and R. L. Bilstein, Plant Engineer, on April 28 to explain the purpose and scope of the compliance monitoring investigation. Mr. Bilstein accompanied the investigators during sampling.

MANUFACTURING PROCESSES AND WASTEWATER DISCHARGES

The Ferroalloys Division manufactures ferro-silicon alloys at Sheffield, Alabama. Approximately 60,000 tons of alloys containing 50 to 75 percent silicon are produced each year. The plant operates 24 hours per day, seven days a week.

The plant has a single permitted discharge, consisting of combined once-through cooling water as well as treated industrial and sanitary wastewaters. This outfall (designated 001 on the NPDES permit) discharges into Lake Wilson (Tennessee River).

During the inspection, another small wastewater discharge was detected. The traveling screen on the plant's raw water intake is cleaned with a water spray. The effluent from this operation is screened and returned to Lake Wilson. This discharge is not listed on the NPDES permit.

WASTEWATER TREATMENT AND MONITORING SYSTEMS

Industrial wastewaters (approximately 2.9 mgd) result from the operation of wet scrubbers used to control air emissions from plant furnaces. There are two scrubbers on each of the plant's four furnaces. Discharges from the scrubbers are treated in the system shown in Figure 1. Lime and chlorine are added to the wastewaters to destroy cyanides and promote settling. The wastewaters are then pumped to two lagoons operated in series. Lime is added to the lagoon effluent prior to settling in a clarifloculator. Effluent from the clarifloculator is again chlorinated to destroy cyanides. The effluent then passes through two lagoons operated in series before being discharged. Sludge from the clarifloculator is recycled to the beginning of the treatment process.

Sanitary wastes are treated in an Infilco extended aeration package sewage treatment plant designed for 33,000 gpd. Effluent from the package plant (outfall 001-A) is chlorinated.

Effluents from the industrial and sanitary wastewater treament systems are discharged into a small pond where they are combined with once-through cooling water. Flow from this pond is measured with a four-foot rectangular weir and staff gage. The company maintains a recording thermometer at the weir in compliance with permit monitoring requirements. An automatic sampler is also located at the weir and is used to collect composite samples of the plant effluent.

SAMPLING PROCEDURES

An ISCO, Model 1392-XG, automatic sampler was installed at the final effluent weir (designated US-001 for this study). The sampler was adjusted to collect aliquots of the water stream at one-hour intervals for three consecutive, 24-hour compositing periods. Grab samples for pH, temperature, and cyanide analyses were also collected daily from this sampling location. The effluent flow was measured using the company weir in conjunction with a US-EPA Stevens Model-F stage recorder installed for this study.

Grab samples were collected twice from the Infilco extended aeration STP (designated UC-001-A) for pH, temperature, BOD_5, and fecal coliform analyses. Instantaneous flow measurements were made using a bucket and stopwatch.

Grab samples of the plant intake raw water (designated UC-RW) were collected daily for pH, temperature, TSS and cyanide analyses.

The effluent from the raw water traveling screen spray system (designated UC-SW) was sampled twice on a grab basis for pH, temperature and TSS analyses. Instantaneous flow measurements were made using a bucket and stopwatch.

All samples were split with the company and the AL-WIC. Samples were refrigerated with ice from the time of collection until delivery to the US-EPA mobile laboratory located in Birmingham, Alabama. Sample chain-of-custody was maintained at all times.

ANALYTICAL RESULTS AND DISCUSSION

Analytical results and permit limitations are given on Table 1.

The company's compliance monitoring data for the months of January - March 1975 were reviewed. All data specified by permit monitoring requirements were present in company records. Company analysts perform all compliance monitoring analyses except for BOD_5 and fecal coliform. These analyses are performed by the University of North Alabama for Union Carbide. A review of analytical methods indicated that the TSS analysis used by Union Carbide was not one of the approved methods listed in the Federal Register.

The rectangular weir at outfall 001 was inspected and found to be dimensionally accurate and level. The recording thermometer was also checked and found to be accurate.

CONTACTS

M. S. Lair, US-EPA, Athens, GA, 404-546-3117
Carl Nelson, AL-WIC, Montgomery, AL, 205-832-5951
Lyle Crosley, AL-WIC, Montgomery, AL, 205-832-5951
R. T. Bilstein, Union Carbide Corp., Sheffield, AL, 205-383-1441

FIGURE I

WASTEWATER TREATMENT SYSTEMS
UNION CARBIDE CORPORATION
FERRO ALLOYS DIVISION
SHEFFIELD, ALABAMA

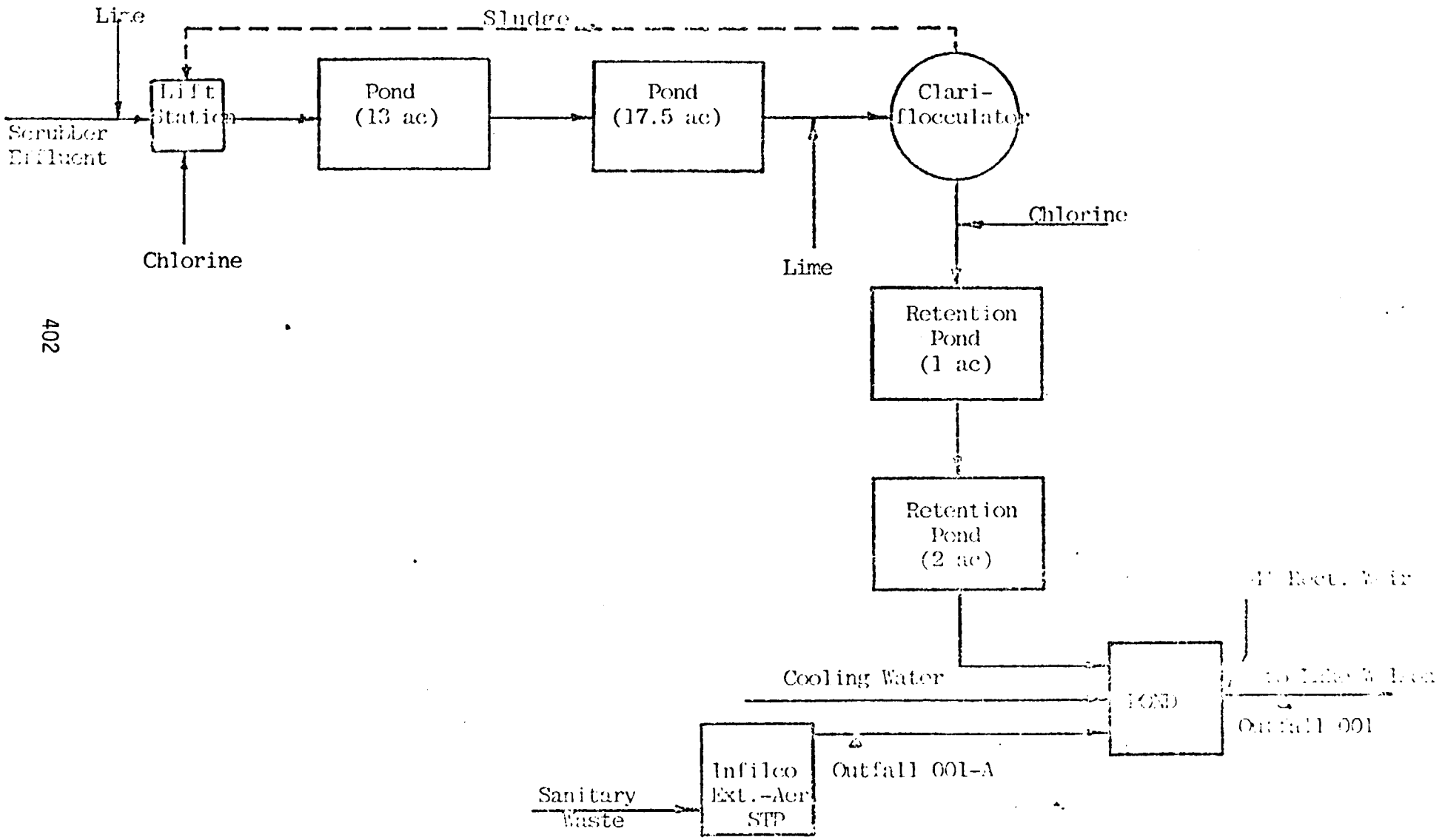

TABLE 1.
ANALYTICAL RESULTS
UNION CARBIDE CORPORATION - FERROALLOYS DIVISION
SHEFFIELD, AL
APRIL - MAY, 1975 PERMIT NO. AL0000027

Station	Date	Time		Date	Time	Conduit Flow MGD	Water Temp. Cent	pH Su	Residue TOT NFLT MG/L	Residue TOT NFLT LB/D	Residue TOT NFLT KG/D	Cyanide CN-TOT MG/L	Cyanide CN-TOT LB/D	Cyanide CN-TOT KG/D
UC-001				750428	1200	8.500	26.0	10.1				0.002	0.144	0.065
"	750428	1200	(C)	750429	"	8.600			10.0	717.7	325.5	0.009	0.646	0.293
"				750429	"	8.600	24.0	9.9				0.004	0.280	0.127
"	750429	"	(C)	750430	1100	8.400			27.0	1,892.7	858.5	0.012	0.851	0.386
"				750430	1200	8.500	25.0	8.8				0.007	0.555	0.252
"	750430	"	(C)	750501	1100	9.500			11.0	872.1	395.6	0.011	0.973	0.441
"				"	1115	10.600	24.0	8.6						
UC-RW				750429	1240		18.0	8.1	<1.0			0.002		
"				750430	1225		19.0	8.4	16.0			0.002		
"				750501	1135		20.0	8.8	8.0			<0.001		
UC-SW				750430	1230	0.420	19.0	8.2	16.0	56.1	25.4			
"				750501	1140	0.320	20.0	8.6	7.0	18.7	8.5			

Station	Date	Time	Date	Time	Conduit Flow MGD	Water Temp. Cent	pH Su	BOD 5-day MG/L	BOD 5-day LB/D	BOD 5-day KG/D	FEC COLI MPNECMED /100ML
UC-001A			750429	1215	0.015	23.0	6.7	<8.0	<1.0	<0.5	<20
"			750430	1210	0.022	22.0	6.7	13.0	2.4	1.1	<20

TABLE 1. (continued)
PERMIT LIMITATIONS

OUTFALL	PARAMETER	KG/DAY	LBS/DAY	OTHER UNITS
001	TSS	644	1,417	-
	Cyanide (Total)	2.3	5.0	
	pH	-	-	Range 6.0 to 9.5
	Note: These limitations are net over the intake source.			
001A	BOD_5	-	-	45 mg/l
	Fecal Coliform	-	-	400 per 100 ml