United States
Environmental Protection
Agency

Office of Air Quality
Planning and Standards
Research Triangle Park NC 27711

EMB Report 79-CUS-14
September 1979

Air

EPA

Copper Smelters

PRIMARY
COPPER SMELTING 12.3
AP-42 Section ~~7~~.3
Reference Number
~~33~~ 34

Emission Test Report
Lead Emissions

AP-42
5th ed.
Section 12.3
#34

Note: This is a reference cited in *AP 42, Compilation of Air Pollutant Emission Factors, Volume I Stationary Point and Area Sources.* AP42 is located on the EPA web site at www.epa.gov/ttn/chief/ap42/

The file name refers to the reference number, the AP42 chapter and section. The file name "ref02_c01s02.pdf" would mean the reference is from AP42 chapter 1 section 2. The reference may be from a previous version of the section and no longer cited. The primary source should always be checked.

LEAD EMISSIONS FROM PRIMARY COPPER SMELTERS

TO

ENVIRONMENTAL PROTECTION AGENCY

Contract #68-02-2812
Work Assignment #39
February 5, 1980

BY
D. Ringwald
and
T. Rooney

TRW
ENVIRONMENTAL ENGINEERING DIVISION
One Space Park, Redondo Beach, CA 90278

CONTENTS

Figures iii
Tables v
1. Introduction. 1
2. Summary and Discussion of Results 3
ASARCO - El Paso, Texas; TRW Test program. 3
ASARCO - El Paso, Texas; Monsanto Test program 8
Phelps-Dodge - Douglas, Arizona; TRW Test program. 22
Phelps-Dodge - Ajo, Arizona; TRW Test program. 25
Phelps-Dodge - Playas, New Mexico; TRW Test program. . . . 33
ASARCO - Tacoma, Washington; TRW Test program. 35
Kennecott - Magma, Utah; TRW Test program. 51
Anaconda - Butte, Montana; Monsanto Test program 58
Process Samples. 62
Lead Emission Factors. 68
3. Location of Sampling Points. 71
ASARCO - El Paso, Texas; TRW Test program. 71
ASARCO - El Paso, Texas, Monsanto Test program 79
Phelps-Dodge - Douglas, Arizona; TRW Test program. 86
Phelps-Dodge - Ajo, Arizona; TRW Test program. 89
Phelps-Dodge - Playas, New Mexico; TRW Test program. . . . 99
ASARCO - Tacoma, Washington; TRW Test program. 101
Kennecott - Magma, Utah; TRW Test program. 113
4. Sampling and Analytical Procedure. 124
Appendices

FIGURES

Number		Page
1	Inlet to converter fugitive emissions baghouse.	73
2	Outlet from converter building fugitive emissions baghouse. . .	74
3	Roaster calcining fugitive emissions duct	75
4	Outlet from the roaster/reverberatory furnace ESP	76
5	Outlet from roaster reverb spray chamber and electrostatic precipitator.	77
6	Matte tapping reverberatory furnace outlet.	78
7	Sampling location D	80
8	Sampling location C	82
9	Sampling location B	83
10	Sampling point A.	85
11	Inlet to calcine/roaster baghouse	87
12	Outlet from calcine/roaster baghouse.	88
13	Converter fugitive emission duct.	90
14	Converter fugitive emission system.	91
15	Matte tapping emission duct	92
16	Matte tapping fugitive emission system.	93
17	ESP inlet sampling locations.	94
18	Acid plant outlet location.	95
19	ESP outlet/acid plant inlet sampling location	97
20	Acid plant schematic - Phelps-Dodge Ajo, Arizona.	98
21	Converter fugitive emission duct.	100
22	Roaster baghouse inlet.	102
23	Roaster baghouse outlet duct.	103
24	Reverberatory furnace electrostatic precipitator.	104
25	Matte tapping	105
26	Slag tapping duct	106

27 Calcine discharge duct. 108
28 Arsenic kitchen inlet to arsenic baghouse 109
29 Metallic arsenic inlet to arsenic baghouse. 110
30 Arsenic baghouse outlet duct. 111
31 Converter slag return duct. 112
32 Matte tapping 115
33 Slag tapping. 116
34 Slag tapping fugitive emission duct traverse point location procedure 117
35 Plant schematic - The matte tapping and slag tapping fugitive emission system 118
36 Acid plant inlet. 119
37 Converter fugitive emission system. 120
38 Plant schematic - Converter fugitive emission system. 121
39 Concentrate dryer stack 122
40 Plant schematic - Concentrate dryer fugitive emission system. 123
41 EPA method 5 particulate sampling train 126

TABLES

Number		Page
1	Baghouse Inlet Lead Results	4
2	Baghouse Outlet Lead Results	5
3	Calcine Fugitive Lead Results	6
4	Matte Tapping Lead Results	7
5	Summary of Arsenic Results at the Inlet of the Stack Point A	9
6	Summary of Lead Results at South Outlet of the Reverberatory Furnaces Point SB	11
7	Summary of Lead Results at North Outlet of the Reverberatory Furnaces Point NB	13
8	Summary of Lead Results at the Outlet of the Roasters Point C	15
9	Summary of Lead Results at the Inlet of the H_2SO_4 Plant Point D	17
10	Summary of Lead Results at Outlet of the H_2SO_4 Plant Point E	19
11	Inlet to Calcine/Roaster Baghouse Lead Results	23
12	Outlet from Calcine/Roaster Baghouse Lead Results	24
13	Matte Tapping Fugitive Emission Results - Lead	26
14	Converter Fugitive Results - Lead	27
15	ESP Inlet #1 Lead Results	29
16	ESP Inlet #2 Lead Results	30
17	ESP Outlet/Acid Plant Inlet Lead Results	31
18	Acid Plant Outlet Lead Results	32
19	Converter Fugitive Emissions Lead Results	34
20	Roaster Baghouse Lead Results	36
21	Roaster Baghouse Outlet Lead Results	37

22 ESP Outlet Lead Results 38
23 Matte Tapping Lead Results. 39
24 Slag Tapping Lead Results 40
25 Calcine Discharge Lead Results. 41
26 Arsenic Baghouse Inlet (Arsenic Kitchen)
Lead Results. 42
27 Arsenic Baghouse Inlet (Metallic Arsenic)
Lead Results. 43
28 Arsenic Baghouse Outlet Lead Results. 44
29 Converter Slag Return Lead Results. 45
30 Converter Full Cycle Lead Results 46
31 Converter Copper Blow Cycle Lead Results. 47
32 Converter Fugitive #1 (E) Lead Results. 48
33 Converter Fugitive #2 (M) Lead Results. 49
34 Converter Fugitive #3 (W) Lead Results. 50
35 Matte Tapping Lead Results. 52
36 Slag Tapping Lead Results 53
37 Acid Plant Inlet Lead Results 54
38 Rollout Converter Fugitive Lead Results 55
39 Full Cycle Converter Fugitive Lead Results. 56
40 Concentrate Drier Lead Results. 57
41 Location 2A 59
42 Location B. 60
43 West Inlet. 61
44 Process Samples 62
45 Lead Emission Factors 69
46 Lead Emission Factors for Primary Copper Smelters without
controls. 70
47 Lead Emission Factors for Primary Copper Smelters with controls. 70

INTRODUCTION

Copper smelters are a significant source of airborne particulates. The fugitive dust emissions from various stages of the process are collected by hoods placed over equipment and ducting to control devices.

In conjunction with the Environmental Protection Agency's Program for developing new source performance standards, TRW and Monsanto Research Corporation performed fugitive emission tests at seven copper smelters including the Asarco smelters at El Paso, Texas and Tacoma, Washington, the Phelps-Dodge smelters at Ajo and Douglas, Arizona and Playas, New Mexico, the Kennecott smelter at Magma, Utah and the Anaconda smelter at Butte, Montana.

The scope of this testing program, designed to provide data on arsenic and sulfur dioxide emissions, has been extended to lead by laboratory analysis on the samples collected.

The first two copper smelters tested in the program, the Anaconda plant at Butte, Montana and the Asarco plant at El Paso, Texas, were sampled by Monsanto Research Corporation. At Asarco, El Paso, Monsanto tested the fugitive emissions collected by hoods placed over the converter line at points before and after the emissions entered the sulfuric acid plant. Also tested by Monsanto were the fugitive emissions collected in the roaster building at points before the emissions enter an electrostatic precipitator, and at a point in the ballon flue on the outlet of the electrostatic precipitator.

In January of 1978 TRW sampled at the Asarco smelter in El Paso. Sites tested by TRW included the converter building fugitive emissions baghouse, the calcining and matte tapping fugitive emissions ducts.

The Phelps-Dodge copper smelters at Douglas and Ajo, Arizona and Playas, New Mexico were sampled by TRW in May, June and July 1978 respectively.

At the Douglas, Arizona plant, TRW sampled the calcine/roaster baghouse, which collected fugitive emissions during the loading process of the train car. The train car transported the concentrate to the reverberatory furnace operation. The fugitive emission system operated on an intermittant basis.

At the Phelps-Dodge Ajo smelter, TRW sampled the fugitive emission systems of the converter slag and copper blow cycle, and the matte tapping operation from the reverberatory furnace. The sulfuric acid plant attached to the copper smelter was also sampled at the inlet to the electrostatic precipitator, the electrostatic precipitator outlet/acid plant inlet, and the acid plant outlet. The acid plant converts sulfur dioxide to sulfuric acid with a contact catalyst.

The converter slag and copper blow cycles were tested by TRW at the Phelps-Dodge Playas, New Mexico copper smelter.

In September 1978 and May 1979, TRW tested the Asarco copper smelter in Tacoma, Washington, which processes ores high in arsenic. The TRW team performed emission testing at the inlet and outlet of the roaster baghouse, the inlet and outlet of the arsenic kitchen, the inlet and outlet of the reverberatory furnace electrostatic precipitator, the fugitive emission systems of the matte tapping, slag tapping, converter slag return, calcine, as well as the converter during copper blow and full cycles and fugitive emissions not controlled by the hoods over the converter.

TRW tested the Kennecott copper smelter at Magma, Utah in November 1978. The matte tapping fugitive emission system tested was operated intermittantly to control emissions from loading of copper matte from reactors to large ladles. The slag tapping futivive emission system works similarly during loading of slag from reactors to the layer ladles. Also tested by TRW were the converter fugitive emission system, the acid plant inlet and the concentrate dryer emission system which removes water and fugitive dust from the rotating concentrate dryers.

This report presents the results of laboratory analysis for lead on the samples collected during this test program. Data is not complete for some tests since some sample solutions required complete consumption in order to accomplish the analysis for arsenic for the original test program.

SUMMARY AND DISCUSSION OF RESULTS

ASARCO - El Paso, Texas; TRW Test program

The results of the emission testing at the five test locations are summarized in Tables 1 - 4 of this report. Three sets of tests were performed at the inlet and outlet of the converter building fugitive emissions baghouse, the calcining fugitive emissions duct, and the matte tapping fugitive duct.

In addition, analyses were performed on composited process samples taken by plant personnel on the days that the fugitive emission testing was being performed. This data is summarized in Table 44.

Since some of the samples from the converter baghouse outlet were consumed in the previous analysis for arsenic the efficiency of the baghouse for lead removal can not be determined. The converter baghouse inlet averaged 6 Kg/hr of lead. Fugitive lead emissions from the calcining and matte tapping operations averaged 0.4 Kg/hr and 0.5 Kg/hr respectively.

TABLE 1. BAGHOUSE INLET LEAD RESULTS.

RUN NUMBER	1		2		3		AVERAGE	
	ENGLISH UNITS	METRIC UNITS	ENGLISH UNITS	METRIC UNITS	ENGLISH UNITS	METRIC UNITS	ENGLISH UNITS	METRIC UNITS
V ANALYTICAL DATA Pb								
A) Front Half								
Probe (mg)	--	2.5000	--	6.270	--	.9800	--	3.2500
Cyclone (mg)								
Filter (mg)	--	18.3000	--	5.3000	--	9.1000	--	10.9000
Front Half Total (mg)		20.8000		11.5700		10.0800		14.1500
grs/SDCF, (mg/m^3)								
#/hr, (kg/hr)								
B) ~~xxxxxxxxxx~~ Imp. 1 & 2 Pb (mg)	--	.0040	--	.0040	--	.01200	--	.0067
grs/SDCF, (mg/m^3)								
#/hr, (kg/hr)								
Pb (mg) Imp 3	--	.0010	--	<.0010	--	<.0010		
grs/SDCF, (mg/m^3)								
#/hr, (kg/hr)								
C) Imp 4, 5 & 6 (mg)	--	.0010	--	.0020	--	.0040	--	.0023
grs/SDCF, (mg/m^3)								
#/hr, (kg/hr)								
D) Total Pb (mg)		20.8060		11.5760		10.096		14.1593
grs/SDCF, (mg/m^3)		9.9076		5.5124		5.0480		6.8227
#/hr, (kg/hr)		8.7898		4.9499		4.3457		6.0285
E) ~~Total SO2~~ (mg) Pb ppm		1.128		0.632		0.577		0.779
grs/SDCF, (mg/m^3)								
#/hr, (kg/hr)								

TABLE 2. BAGHOUSE OUTLET LEAD RESULTS.

RUN NUMBER	1		2		3		AVERAGE	
	ENGLISH UNITS	METRIC UNITS	ENGLISH UNITS	METRIC UNITS	ENGLISH UNITS	METRIC UNITS	ENGLISH UNITS	METRIC UNIT
V ANALYTICAL DATA								
A) Front Half								
Probe (mg)	--	.7600	--	.03800	--	.0170	--	.2717
Cyclone (mg)								
Filter (mg)								
Front Half Total (mg)								
grs/SDCF, (mg/m^3)								
#/hr, (kg/hr)								
B) ~~XXXXXXXXXX~~ Imp. 1 & 2								
Pb (mg)								
grs/SDCF, (mg/m^3)								
#/hr, (kg/hr)								
Pb (mg) Imp 3								
grs/SDCF, (mg/m^3)			--	<.0010				
#/hr, (kg/hr)								
C) Imp 4, 5 & 6 (Pb) (mg)	--	.0030	--	.0020				
grs/SDCF, (mg/m^3)								
#/hr, (kg/hr)								
D) Total (mg)								
grs/SDCF, (mg/m^3)								
#/hr, (kg/hr)								
E) Total SO_2 (mg)								
ppm								
grs/SDCF, (mg/m^3)								
#/hr, (kg/hr)								

TABLE 3. CALCINE FUGITIVE LEAD RESULTS

RUN NUMBER	1		2		3		AVERAGE	
	ENGLISH UNITS	METRIC UNITS	ENGLISH UNITS	METRIC UNITS	ENGLISH UNITS	METRIC UNITS	ENGLISH UNITS	METRIC UNIT
V ANALYTICAL DATA								
A) Front Half								
Probe (mg)	--	.1220	--	.0660	--	.0440	--	.0773
Cyclone (mg)								
Filter (mg)	--	29.6000	--	.9000	--	.9600	--	10.4867
Front Half Total (mg)		29.7220		0.9660		1.004		10.564
grs/SDCF, (mg/m^3)								
#/hr, (kg/hr)								
B) ~~Particulates~~ Imp 1 & 2 Pb (mg)	--	.0014	--	.0170	--	.0110	--	.0098
grs/SDCF, (mg/m^3)								
#/hr, (kg/hr)								
Pb (mg)	--	< .0010	--	< .0010	--	< .0010		
grs/SDCF, (mg/m^3)								
#/hr, (kg/hr)								
C) Imp 4, 5 & 6 (Pb) (mg)	--	.0090	--	.0240	--	.0020	--	.0117
grs/SDCF, (mg/m^3)								
#/hr, (kg/hr)								
D) Total total (mg)		29.7324		1.0070		1.0170		10.5855
grs/SDCF, (mg/m^3)		33.0360		1.0070		1.1300		11.7243
#/hr, (kg/hr)		0.4331		0.0134		0.0147		0.1537
E) ~~Total SO$_2$~~ (mg)		5.256		0.117		0.129		1.834
Pb ppm								
grs/SDCF, (mg/m^3)								
#/hr, (kg/hr)								

TABLE 4. MATTE TAPPING LEAD RESULTS

RUN NUMBER	1		2		3		AVERAGE	
	ENGLISH UNITS	METRIC UNITS	ENGLISH UNITS	METRIC UNITS	ENGLISH UNITS	METRIC UNITS	ENGLISH UNITS	METRIC UNI
V ANALYTICAL DATA								
A) Front Half								
Probe (mg)	--	2.6600	--	1.4400	--	1.0500	--	1.7167
Cyclone (mg)								
Filter (mg)	--	76.5000	--	47.5000	--	32.3000	--	52.1000
Front Half Total (mg)		79.1600		48.9400		33.3500		53.8167
grs/SDCF, (mg/m^3)								
#/hr, (kg/hr)								
B) ~~XXXXXXXXXX~~ Imp 1 & 2 Pb (mg)	--	.0040	--	.0050	--	.0310	--	.0133
grs/SDCF, (mg/m^3)								
#/hr, (kg/hr)								
Pb (mg) Imp 3	--	< .0010			--	< .0010		
grs/SDCF, (mg/m^3)								
#/hr, (kg/hr)								
C) Imp 4, 5 & 6 (Pb) ~~X(mg)~~	--	.0020	--	.0080	--	.0060	--	.0053
grs/SDCF, (mg/m^3)								
#/hr, (kg/hr)								
D) Total total (mg)		79.1660		48.9530		33.3870		53.8187
grs/SDCF, (mg/m^3)		16.1563		9.4140		3.8376		9.8026
#/hr, (kg/hr)		0.7737		0.5028		0.2027		0.4931
E) ~~XXXXXXXXX(Kg)~~		1.889		1.081		0.446		1.139
Pb ppm								
grs/SDCF, (mg/m^3)								
#/hr, (kg/hr)								

ASARCO - El Paso, Texas; Monsanto test program

This program was separated into essentially two phases. The first phase was sampling of the effluent of the converter line. These gases are collected into ducts and directed to an induced draft fan. The exhaust of this fan is directed through a short section of duct work into a long spray chamber. This short section of duct work is sampling location D, inlet to the sulfuric acid plant. The gases leave the spray chamber and go to an electrostatic precipitation particulate collection device.

From here they are directed to the inlet of the sulfuric acid plant. The outlet of the sulfuric acid plant is an atmospherically vented stack. This outlet duct is sampling location E. The second phase of this program was to sample the outlets of the reverberatory furnace, the outlets of the multi-hearth roasters, and the combination of these gases after passing through the particulate removal system at the base of the main stack. The gases from the multi-hearth roasters are directed to a large downtake at the side of the roaster building and down into a large existing brick flue. This downtake is sampling location C. The gases from the reverberatory furnace pass through two waste heat boilers and then through two rectangular ducts into the same existing flue. These two flues are designated sampling locations North B and South B. The gases in this flue pass to a spray chamber, leave the spray chamber and pass through an electrostatic precipitator. The gases leaving this electrostatic precipitator pass through a large balloon flue and into the base of the main stack. This balloon flue is sampling location A.

The lead concentration of fugitive emissions from the converter line, which is summarized in Table 9, averages 2 Kg/hr.

Table 5. SUMMARY OF ARSENIC RESULTS AT THE INLET OF THE STACK (POINT A)

Metric Units

Run Number	A-1	A-2	A-3
Date	6/26/77	6/27/77	6/28/77
Method Type	Arsenic	Arsenic	Arsenic
Volume of gas sampled-Nm^3 [a]	1.35	1.41	1.42
Percent moisture by volume	6.81	6.13	1.39
Average stack temperature-°C	102	104	105
Stack volumetric flow rate-Nm^3/min	5693	5944	6307
Stack volumetric flow rate-Am^3/min [b]	8988	9398	9478
Percent Isokinetic	100.4	100.4	95.4
Duration of run - minutes	153	153	153
Arsenic - probe, cyclone and filter catch			
mg	2.88	9.89	4.72
g/Nm^3	0.002	0.007	0.003
Kg/hr	0.727	2.496	1.252
Arsenic - total catch			
mg	6.11	13.30	5.80
g/Nm^3	0.005	0.009	0.004
Kg/hr	1.543	3.357	1.539
Percent impinger catch	53	26	19

[a] Normal cubic meters at 20°C, 760 mm Hg

[b] Actual cubic meters per minute

TABLE 5. (continued)

RUN NUMBER	1		2		3		AVERAGE	
	ENGLISH UNITS	METRIC UNITS	ENGLISH UNITS	METRIC UNITS	ENGLISH UNITS	METRIC UNITS	ENGLISH UNITS	METRIC UNITS
V ANALYTICAL DATA								
A) Front Half								
Probe (mg) & cyclone (Test #1) (Probe Test #3)	--	1.1800			--	4.2600		--
~~Cyclone (mg)~~ Front Filter	--	1.3800	--	.8350	--	.2260	--	.8137
Back Filter (mg)	--	.0130	--	.0050	--	.0170	--	.0117
Front Half Total (mg)		2.5730		0.8400		4.5030		
grs/SDCF, (mg/m^3)		1.9060		--		3.1710		--
#/hr, (kg/hr)		0.6510		--		1.2000		--
B) ~~Noxxxxxxxxx~~ Imp 1 & 2 & 3 Pb (mg)	--	.0730	--	.0250	--	.0590	--	.0523
grs/SDCF, (mg/m^3)								
#/hr, (kg/hr)								
Imp 4 Pb (mg)	--	.0120	--	.0100	--	.0050	--	.0090
grs/SDCF, (mg/m^3)								
#/hr, (kg/hr)								
C) Imp 5 (Pb) (mg)	--	.0100	--	.0080	--	.0180	--	.0120
grs/SDCF, (mg/m^3)								
#/hr, (kg/hr)								
D) Total Imp Pb (mg)		0.095		0.043		0.082		0.073
grs/SDCF, (mg/m^3)								
#/hr, (kg/hr)								
Pb E) Total ~~SO~~$_2$ (mg)		2.668		0.883		4.585		2.7120
ppm								
grs/SDCF, (mg/m^3)		1.976		--		3.229		
#/hr, (kg/hr)		0.6750		--		1.2219		
ppm Pb		0.229				0.374		

Table 6. SUMMARY OF LEAD RESULTS AT SOUTH OUTLET OF THE REVERBERATORY FURNACES (POINT SB)

Metric Units

Run Number	SB-1	SB-2	SB-3
Date	6/26/77	6/27/77	6/28/77
Method Type	Arsenic	Arsenic	Arsenic
Volume of gas sampled-Nm^3 [a]	0.44	0.67	0.68
Percent moisture by volume	14.19	13.36	25.19
Average stack temperature-°C	420	408	323
Stack volumetric flow rate-Nm^3/min	560	625	736
Stack volumetric flow rate-Am^3/min [b]	1767	1928	2292
Percent Isokinetic	95.8	97.7	113.4
Duration of run - minutes	120	120	120
Arsenic - probe, cyclone and filter catch			
mg	128.8	901.8	954.6
g/Nm^3	0.293	1.803	1.395
Kg/hr	9.834	67.55	61.56
Arsenic - total catch			
mg	129.7	912.0	1012.0
g/Nm^3	0.295	1.824	1.479
Kg/hr	9.902	68.31	65.27
Percent impinger catch	1	1	6

[a] Normal cubic meters at 20°C, 760 mm Hg

[b] Actual cubic meters per minute

TABLE 6. (continued)

RUN NUMBER	1		2		3		AVERAGE	
	ENGLISH UNITS	METRIC UNITS	ENGLISH UNITS	METRIC UNITS	ENGLISH UNITS	METRIC UNITS	ENGLISH UNITS	METRIC UNIT
V ANALYTICAL DATA								
A) Front Half								
Probe (mg)	--	4.5000	--	.2100	--	.0380	--	1.5827
Cyclone (mg)	--	1.7000	--	197.0000	--	11.6000	--	70.1000
Filter (mg)	--	.5500	--	.6100	--	2.3000	--	1.1533
Front Half Total (mg)		6.7500		197.8200		13.9380	-	72.836
grs/SDCF, (mg/m^3)		15.3409		295.2537		20.4971		110.3639
#/hr, (kg/hr)		0.5155		11.0720		0.9052		4.1642
B) ~~Particulates~~ Back-Filter Pb (mg)	--	.0610	--	.4100	--	.0520	--	.1743
grs/SDCF, (mg/m^3)								
#/hr, (kg/hr)								
Pb (mg) Imp. 1, 2, & 3	--	.0100	--	.0100	--	.2100	--	.0767
grs/SDCF, (mg/m^3)								
#/hr, (kg/hr)								
C) Imp. 4 (mg)	--	.0130	--	.0030	--	.0280	--	.0147
grs/SDCF, (mg/m^3)								
#/hr, (kg/hr)								
D) ~~Total~~ Imp 5 (mg)	--	.0290	--	.0130	--	.3730	--	.1383
grs/SDCF, (mg/m^3)								
#/hr, (kg/hr)								
E) Total SO_2 (mg) Impinger total		0.1130		0.4360		0.6630		0.4040
~~PPM~~ total lead		6.8630		198.256		14.6010		73.2400
grs/SDCF, (mg/m^3)		15.5977		295.9045		21.4721		110.9914
#/hr, (kg/hr)		0.5241		11.0964		0.9482		4.1896
		1.813		46.023		2.477		16.771

Table 7. SUMMARY OF LEAD RESULTS AT NORTH OUTLET OF THE REVERBERATORY FURNACES (POINT NB)

Metric Units

Run Number	NB-1	NB-2	NB-3
Date	6/26/77	6/27/77	6/28/77
Method Type	Arsenic	Arsenic	Arsenic
Volume of gas sampled-Nm^3 [a]	0.91	1.03	1.05
Percent moisture by volume	6.86	17.92	19.00
Average stack temperature-°C	500	419	401
Stack volumetric flow rate-Nm^3/min	1095	1198	1145
Stack volumetric flow rate-Am^3/min [b]	3555	3963	3721
Percent Isokinetic	103.8	107.1	112.7
Duration of run - minutes	120	120	120
Arsenic - probe, cyclone and filter catch			
mg	98.85	683.90	691.00
g/Nm^3	0.108	0.661	0.664
Kg/hr	7.083	47.48	45.62
Arsenic - total catch			
mg	255.70	698.80	756.20
g/Nm^3	0.279	0.676	0.727
Kg/hr	18.32	48.52	49.92
Percent impinger catch	61	2	9

[a] Normal cubic meters at 20°C, 760 mm Hg

[b] Actual cubic meters per minute

TABLE 7. (continued)

RUN NUMBER	1		2		3		AVERAGE	
	ENGLISH UNITS	METRIC UNITS	ENGLISH UNITS	METRIC UNITS	ENGLISH UNITS	METRIC UNITS	ENGLISH UNITS	METRIC UNITS
V ANALYTICAL DATA								
A) Front Half								
Probe (mg)	--	5.1500	--	2.4800	--	2.6200	--	3.4167
Cyclone (mg)	--	1.5100	--	3.5200	--	20.2000	--	8.4100
Filter (mg)	--	.6300	--	.7260		.6200	--	.6587
Front Half Total (mg)		7.2900		6.7260		23.4400		12.4833
grs/SDCF, (mg/m^3)		8.0110		6.5301		22.3238		12.2883
#/hr, (kg/hr)		0.5263		0.4694		1.5336		0.8431
B) ~~XXXXXXXX~~ Back filter								
Pb (mg)	--	.4600	--	.0940	--	.0350	--	.1963
grs/SDCF, (mg/m^3)								
#/hr, (kg/hr)								
Pb (mg) Imp. 1, 2, & 3	--	.3600	--	.0220	--	.0020	--	.1280
grs/SDCF, (mg/m^3)								
#/hr, (kg/hr)								
C) Imp. 4 (mg)	--	.0580	--	.0030	--	.0170	--	.0260
grs/SDCF, (mg/m^3)								
#/hr, (kg/hr)								
D) Total Imp 5 (mg)	--	.0500	--	.0260				
grs/SDCF, (mg/m^3)								
#/hr, (kg/hr)								
E) ~~XXXXXX~~ (mg) Impinger total		0.8700		0.1450		0.0540		0.3563
~~XXX~~ Total lead		8.1600		6.8710		23.4940		12.8417
grs/SDCF, (mg/m^3)		8.9670		6.6708		22.3752		12.6710
#/hr, (kg/hr)		0.5891		0.4795		1.5372		0.8686
ppm Pb		1.033		0.771		2.623		1.476

Table 8. SUMMARY OF LEAD RESULTS AT THE OUTLET OF THE ROASTERS (POINT C)

Metric Units

Run Number	C-1	C-2	C-3
Date	6/26/77	6/27/77	6/28/77
Method Type	Arsenic	Arsenic	Arsenic
Volume of gas sampled-Nm^3 [a]	1.71	1.23	0.75
Percent moisture by volume	6.70	5.32	9.41
Average stack temperature-°C	78	99	111
Stack volumetric flow rate-Nm^3/min	3991	4241	1587
Stack volumetric flow rate-Am^3/min [b]	5862	6502	2629
Percent Isokinetic	102.4	66.8	109.2
Duration of run - minutes	116	120	120
Arsenic - probe, cyclone and filter catch			
mg	23.43	22.67	53.78
g/Nm^3	0.014	0.018	0.071
Kg/hr	3.266	4.680	6.800
Arsenic - total catch			
mg	39.45	29.03	65.47
g/Nm^3	0.023	0.024	0.087
Kg/hr	5.499	5.993	8.278
Percent impinger catch	41	22	18

[a] Normal cubic meters at 20°C, 760 mm Hg

[b] Actual cubic meters per minute

TABLE 8. (continued)

RUN NUMBER	1		2		3		AVERAGE	
	ENGLISH UNITS	METRIC UNITS	ENGLISH UNITS	METRIC UNITS	ENGLISH UNITS	METRIC UNITS	ENGLISH UNITS	METRIC UNIT
V ANALYTICAL DATA								
A) Front Half								
Probe (mg)	--	3.3900	--	9.2400	--	11.4000	--	8.0100
Cyclone (mg)	--	6.9300	--	3.6000	--	1.0200	--	3.8500
Filter (mg) (front)	--	.9400	--	2.1500	--	5.7500	--	2.9467
Front Half Total (mg)		11.2600		14.9900		18.1700		4.8060
grs/SDCF, (mg/m^3)		6.5850		12.1870		24.2300		4.3340
#/hr, (kg/hr)		1.5768		3.1011		2.3072		2.3283
B) ~~XXXXXXXXX~~ Back Filter								
Pb (mg)	--	.0390	--	.0220	--	.0300	--	.0303
grs/SDCF, (mg/m^3)								
#/hr, (kg/hr)								
Pb (mg) Imp 1, 2, & 3	--	.6200	--	.5100	--	.7200	--	.6167
grs/SDCF, (mg/m^3)								
#/hr, (kg/hr)								
C) Imp 4 (mg)	--	.0600	--	.0090	--	.0140	--	.0277
grs/SDCF, (mg/m^3)								
#/hr, (kg/hr)								
D) ~~XXX~~ ~~Total~~ Imp 5 (mg)	--	.4070	--	.0140	--	.0210	--	.1473
grs/SDCF, (mg/m^3)								
#/hr, (kg/hr)								
E) ~~Total SO$_2$~~ (mg) Impinger total		1.1260		0.5550		0.7850		0.8220
~~XXXXXX~~ ~~ppm~~ total Lead (mg)		12.2860		15.5450		18.9550		~~15.5953~~
grs/SDCF, (mg/m^3)		7.2433		12.6382		25.2733		15.0516
#/hr, (kg/hr)		1.7345		3.2159		2.4065		2.4523
		0.837		1.465		2.924		1.742

Table 9. SUMMARY OF LEAD RESULTS AT THE INLET OF THE H_2SO_4 PLANT (POINT D)

Metric Units

Run Number	D-1	D-2	D-3
Date	6/21/77	6/22/77	6/23/77
Method Type	Arsenic	Arsenic	Arsenic
Volume of gas sampled-Nm^3 [a]	1.77	1.24	1.17
Percent moisture by volume	2.07	5.72	4.94
Average stack temperature-°C	222	209	200
Stack volumetric flow rate-Nm^3/min	1653	1563	1553
Stack volumetric flow rate-Am^3/min [b]	3257	3116	3003
Percent Isokinetic	98.5	112.2	106.0
Duration of run - minutes	105	96	96
Arsenic - probe, cyclone and filter catch			
mg	3923.00	230.50	289.30
g/Nm^3	2.210	0.185	0.248
Kg/hr	219.0	17.38	23.08
Arsenic - total catch			
mg	4181.00	283.70	305.50
g/Nm^3	2.355	0.228	0.262
Kg/hr	233.4	21.39	24.37
Percent impinger catch	6	19	5

[a] Normal cubic meters at 20°C, 760 mm Hg

[b] Actual cubic meters per minute

TABLE 9. (continued)

RUN NUMBER	1		2		3		AVERAGE	
	ENGLISH UNITS	METRIC UNITS	ENGLISH UNITS	METRIC UNITS	ENGLISH UNITS	METRIC UNITS	ENGLISH UNITS	METRIC UNIT
V ANALYTICAL DATA								
A) Front Half								
Probe (mg)	--	45.9000	--	13.0000	--	8.5600	--	22.4867
Cyclone (mg)	--	0.5700	--	3.2100	--	3.3600	--	2.3800
Filter (mg) (front)	--	8.4800	--	3.1600	--	2.3900	--	4.6767
Front Half Total (mg)		54.9500		19.3700		14.31		29.5433
grs/SDCF, (mg/m^3)		31.0452		15.6210		12.2308		19.6323
#/hr, (kg/hr)		3.0790		1.4649		1.1397		1.8945
B) ~~Back Filter~~ Back-Filter								
Pb (mg)	--	8.4500	--	10.8000	--	.0610	--	6.4370
grs/SDCF, (mg/m^3)								
#/hr, (kg/hr)								
Pb (mg) Imp 1, 2, &3	--	.0050	--	2.2200	--	1.1600	--	1.1283
grs/SDCF, (mg/m^3)								
#/hr, (kg/hr)								
C) Imp 4 (mg)	--	.0800	--	.0420	--	.4100	--	.1773
grs/SDCF, (mg/m^3)								
#/hr, (kg/hr)								
D) ~~XXXX~~ Imp 5 (mg)	--	.0040	--	.3930	--	.0010	--	.1327
grs/SDCF, (mg/m^3)								
#/hr, (kg/hr)								
E) ~~XXXXXX~~ (mg) Impinger total		8.5390		13.4550		1.6320		7.8753
~~XX~~ Total lead		63.4890		32.8250		15.942		37.4187
grs/SDCF, (mg/m^3)		35.8695		26.4718		13.6256		25.3223
#/hr, (kg/hr)		3.5575		2.4825		1.2696		2.4365
		4.153		3.066		1.586		2.935

Table 10. SUMMARY OF LEAD RESULTS AT OUTLET OF THE H_2SO_4 PLANT (POINT E)

Metric Units

Run Number	E-1	E-2	E-3	E-4
Date	6/21/77	6/22/77	6/23/77	6/24/77
Method Type	Arsenic	Arsenic	Arsenic	Arsenic
Volume of gas sampled-Nm^3 [a]	1.64	1.52	1.91	1.88
Percent moisture by volume	0	0	0	0
Average stack temperature-°C	64	64	66	69
Stack volumetric flow rate-Nm^3/min	1929	1885	1875	1831
Stack volumetric flow rate-Am^3/min [b]	2542	2485	2475	2441
Percent Isokinetic	73.0	76.2	96.4	97.4
Duration of run - minutes	132	132	132	132
Arsenic - probe, cyclone and filter catch				
mg	0.27	2.75	2.06	0.39
g/Nm^3	0.0002	0.0018	0.0011	0.0002
Kg/hr	0.019	0.205	0.121	0.023
Arsenic - total catch				
mg	0.31	4.77	2.13	0.66
g/Nm^3	0.0002	0.0031	0.0011	0.0004
Kg/hr	0.022	0.355	0.126	0.038
Percent impinger catch	13	42	3	41

[a] Normal cubic meters at 20°C, 760 mm Hg

[b] Actual cubic meters per minute

TABLE 10. (continued)

RUN NUMBER	1		2		3		#4	
	ENGLISH UNITS	METRIC UNITS	ENGLISH UNITS	METRIC UNITS	ENGLISH UNITS	METRIC UNITS	ENGLISH UNITS	METRIC UNIT
V ANALYTICAL DATA								
A) Front Half								
Probe (mg)	--	1.7700	--	1.7600	--	3.0300	--	.4950
Cyclone (mg)								
Filter (mg) (front)	--	.0080	--	.0060	--	.0050	--	.0050
Front Half Total (mg)		1.7780		1.7660		3.0350		0.5000
grs/SDCF, (mg/m^3)		1.0841		1.1618		1.5890		0.2650
#/hr, (kg/hr)		0.1255		0.1314		0.1788		0.0292
B) ~~Particulates~~ - XXXXXXX Back filter	--	.0090						
~~Pb~~ (mg)								
grs/SDCF, (mg/m^3)								
#/hr, (kg/hr)								
Pb (mg) Imp 1, 2, &3	--	.0170	--	.0360	--	.0500	--	.0250
grs/SDCF, (mg/m^3)								
#/hr, (kg/hr)								
C) Imp 4 Pb (mg)	--	.0090	--	.0070	--	.0050	--	.0260
grs/SDCF, (mg/m^3)								
#/hr, (kg/hr)								
D) ~~Total~~ Imp 5 (mg)	--	.0060	--	.0110	--	.0040	--	.0060
grs/SDCF, (mg/m^3)								
#/hr, (kg/hr)								
E) ~~Total SO_2~~ (mg) Impinger total		0.0410		0.0540		0.0590		0.0570
~~ppm~~ total lead		1.8190		1.7820		3.094		0.5570
grs/SDCF, (mg/m^3)		1.1091		1.1724		1.5890		0.2963
#/hr, (kg/hr)		0.1284		0.1326		0.1788		0.0326
ppm Pb		0.129		0.136		0.188		0.034

TABLE 10. (continued)

RUN NUMBER	1		2		3		AVERAGE	
	ENGLISH UNITS	METRIC UNITS	ENGLISH UNITS	METRIC UNITS	ENGLISH UNITS	METRIC UNITS	ENGLISH UNITS	METRIC UNIT
V ANALYTICAL DATA								
A) Front Half								
Probe (mg)							--	1.7638
Cyclone (mg)								
Filter (mg)							--	.0060
Front Half Total (mg)								
grs/SDCF, (mg/m^3)								
#/hr, (kg/hr)								
B) Particulates -								
(mg)								
grs/SDCF, (mg/m^3)								
#/hr, (kg/hr)								
Pb (mg) Imp 1, 2, & 3							--	.0320
grs/SDCF, (mg/m^3)								
#/hr, (kg/hr)								
C) Imp 4 (mg)							--	.0198
grs/SDCF, (mg/m^3)								
#/hr, (kg/hr)								
D) ~~Total~~ Imp. 5 (mg)							--	.0068
grs/SDCF, (mg/m^3)								
#/hr, (kg/hr)								
E) Total SO_2 (mg)								
ppm								
grs/SDCF, (mg/m^3)								
#/hr, (kg/hr)								

Phelps-Dodge - Douglas, Arizona; TRW Test Program

Two main problems were encountered in the testing program at the Phelps-Dodge copper smelter. When the TRW personnel arrived at the site, the plant was not operating due to mechanical malfunction. This problem caused a one and a half day delay in the testing program.

The second problem was the intermittent process operation. The emissions being measured were during the loading of train cars that transported the calcine. The loading operation took two to five minutes and the process occurred once every twenty-five to thirty minutes. The testing necessitated one traverse point per loading operation due to the variability in loading times. Stop watches were utilized to obtain accurate times. All data was time weighted to achieve the averages. This was accomplished to account for variability in loading times.

The previous arsenic analysis on the samples collected required the complete use of some fractions. This precludes calculation of total lead concentrations. Results are summarized in Table 11 and 12.

During the data reduction, the meter volume was back calculated to account for sulfur dioxide that was removed by the impingers containing 10% hydrogen peroxide. The back calculation for sulfur dioxide was accomplished in the following order. First parts per million sulfur dioxide at standard conditions was calculated, then parts per million was converted to a fraction by dividing by 10^6. This number was added to one and the result multiplied by volume of gas collected through the dry meter at standard conditions. The result of multiplication yielded the actual gas volume collected at atandard conditions. Since SO_2 removal by the peroxide impingers does not reach the dry gas meter, corrected values for dry gas meter volumes (at meter conditions) found on the summary sheets will be slightly higher than those obtained from the field data sheets.

TABLE 11. INLET TO CALCINE/ROASTER BAGHOUSE LEAD RESULTS

RUN NUMBER	1		2		3		AVERAGE	
	ENGLISH UNITS	METRIC UNITS	ENGLISH UNITS	METRIC UNITS	ENGLISH UNITS	METRIC UNITS	ENGLISH UNITS	METRIC UNIT
V ANALYTICAL DATA								
A) Pb Front Half								
Probe (mg)	--	.0480	--	.9480	--	.1620	--	.3860
Cyclone (mg)								
Filter (mg)								
Front Half Total (mg)								
grs/SDCF, (mg/m^3)								
#/hr, (kg/hr)								
B) ~~XXXXXXXXX~~ Imp. 1, 2, & 3								
Pb (mg)	--	.0030	--			.0020		
grs/SDCF, (mg/m^3)								
#/hr, (kg/hr)								
(mg)								
grs/SDCF, (mg/m^3)								
#/hr, (kg/hr)								
C) (mg)								
grs/SDCF, (mg/m^3)								
#/hr, (kg/hr)								
D) Total (mg)								
grs/SDCF, (mg/m^3)								
#/hr, (kg/hr)								
E) Total SO_2 (mg)								
ppm								
grs/SDCF, (mg/m^3)								
#/hr, (kg/hr)								

TABLE 12. OUTLET FROM CALCINE/ROASTER BAGHOUSE LEAD RESULTS

RUN NUMBER	1		2		3		AVERAGE	
	ENGLISH UNITS	METRIC UNITS	ENGLISH UNITS	METRIC UNITS	ENGLISH UNITS	METRIC UNITS	ENGLISH UNITS	METRIC UNI
V ANALYTICAL DATA Pb								
A) Front Half								
Probe (mg)	--	.0994	--	.0425				
Cyclone (mg)								
Filter (mg)								
Front Half Total (mg)								
grs/SDCF, (mg/m^3)								
#/hr, (kg/hr)								
B) ~~XXXXXXXXXXX~~ Imp. 1, 2, & 3								
____ (mg)	--	.0050	--	.0030	--	.0010	--	.0030
grs/SDCF, (mg/m^3)								
#/hr, (kg/hr)								
____ (mg)								
grs/SDCF, (mg/m^3)								
#/hr, (kg/hr)								
C) ____ (mg)								
grs/SDCF, (mg/m^3)								
#/hr, (kg/hr)								
D) Total ____ (mg)								
grs/SDCF, (mg/m^3)								
#/hr, (kg/hr)								
E) Total SO_2 (mg)								
ppm								
grs/SDCF, (mg/m^3)								
#/hr, (kg/hr)								

Phelps-Dodge - Ajo, Arizona; TRW Test Program

During the program one additional test was run at the converter fugitive emission system. The test was performed because of a possible error in rinsing a U connector which was believed rinsed with acetone instead of .1N NaOH. To compare results, the test, (Table 14) was included with other tests.

The sampling required coordination with plant officials to assure that the testing was performed during the process operation.

The testing at the matte tapping fugitive emission system required intermittent testing only when the copper matte was removed from the Reverb furnace. The sampling at the converter fugitive emission system required testing only during the slag and copper blow cycles.

Due to high ambient temperature (116°F) and high sulfur dioxide concentration at the acid plant testing locations, sampling was performed under adverse conditions.

Test no. 2 at the north acid plant inlet was aborted because TRW personnel inadvertently pointed the nozzle downstream. Because of the ensuing mechanical problems at the plant, the TRW crew could not repeat test no. 2. Results of the acid plant tests are summarized in Tables 15 - 18.

The fugitive lead emission from the converter averaged 0.24 Kg/hr, and from the matte tapping, 0.11 Kg/hr (see Table 13). Because some samples were consumed in the previous arsenic analysis the lead concentrations can not be calculated.

During the data reduction, the meter volume was back calculated to account for sulfur dioxide that was removed by the three 10% hydrogen peroxide impingers. The back calculation for sulfur dioxide was accomplished in the following order. First, parts per million sulfur dioxide at standard conditions was calculated. Then parts per million was converted to a fraction by dividing by 10^6. This number was added to one and the result multiplied by volume of gas collected through the dry gas meter at standard conditions. The result of multiplication yielded the actual gas volume collected at standard conditions. Since SO_2 removed by the peroxide impingers does not reach the dry gas meter corrected values for dry gas meter volume (at meter conditions) found on the summary sheets will be slightly higher than those obtained from the field data sheets.

TABLE 13. MATTE TAPPING FUGITIVE EMISSION RESULTS - LEAD

RUN NUMBER	1		2		3		AVERAGE	
	ENGLISH UNITS	METRIC UNITS	ENGLISH UNITS	METRIC UNITS	ENGLISH UNITS	METRIC UNITS	ENGLISH UNITS	METRIC UNITS
V ANALYTICAL DATA Pb								
A) Front Half								
Probe (mg)	--	0.1780	--	0.2720	--	0.2300	--	.2267
Cyclone (mg)								
Filter (mg)	--	1.720	--	1.9000	--	1.630	--	1.4167
Front Half Total (mg)		1.8980		2.1720		3.9300		1.6434
grs/SDCF, (mg/m^3)		0.4832		0.7898		1.4556		0.9095
#/hr, (kg/hr)		0.0524		0.0971		0.1708		0.1067
B) ~~Pb~~ Imp. 1, 2, & 3								
Pb (mg)	--	.0050	--	.0010	--	.0030	--	.0030
grs/SDCF, (mg/m^3)		.0013		.0004		.0011		.0009
#/hr, (kg/hr)		.0001		.0000		.0001		.0001
Pb (mg) total		1.903		2.182		3.933		2.673
grs/SDCF, (mg/m^3)		0.484		0.793		1.457		0.911
#/hr, (kg/hr)		0.052		0.098		0.172		0.108
ppm Pb		0.056		0.092		0.169		0.106
C) (mg)								
grs/SDCF, (mg/m^3)								
#/hr, (kg/hr)								
D) Total (mg)								
grs/SDCF, (mg/m^3)								
#/hr, (kg/hr)								
E) Total SO_2 (mg)								
ppm								
grs/SDCF, (mg/m^3)								
#/hr, (kg/hr)								

TABLE 14. CONVERTER FUGITIVE RESULTS - LEAD

RUN NUMBER	1		2		3		#4	
	ENGLISH UNITS	METRIC UNITS	ENGLISH UNITS	METRIC UNITS	ENGLISH UNITS	METRIC UNITS	ENGLISH UNITS	METRIC UNIT
ANALYTICAL DATA								
A) Front Half								
Probe (mg)	--	3.850	--	3.250	--	3.780	--	2.510
Cyclone (mg)								
Filter (mg)	--	2.440	--	2.030	--	1.890	--	1.360
Front Half Total (mg)		6.290		5.280		5.670		3.870
grs/SDCF, (mg/m^3)		1.258		2.110		2.305		1.680
#/hr, (kg/hr)		0.183		0.314		0.337		0.240
B) ~~XXXXXXXXXX~~ Imp. 1; 2, & 3								
Pb (mg)	--	.0030	--	.0010	--	.0010	--	.0010
grs/SDCF, (mg/m^3)		.0006		.0004		.0004		.0004
#/hr, (kg/hr)		.0000		.0000		.0000		.0000
Pb (mg) total		6.293		5.281		5.671		3.871
grs/SDCF, (mg/m^3)		1.259		2.112		2.305		1.683
#/hr, (kg/hr)		0.183		0.314		0.337		0.240
ppm Pb		0.148		0.244		0.266		0.192
C) (mg)								
grs/SDCF, (mg/m^3)								
#/hr, (kg/hr)								
D) Total (mg)								
grs/SDCF, (mg/m^3)								
#/hr, (kg/hr)								
E) Total SO_2 (mg)								
ppm								
grs/SDCF, (mg/m^3)								
#/hr, (kg/hr)								

TABLE 14. (continued)

RUN NUMBER	1		2		3		AVERAGE	
	ENGLISH UNITS	METRIC UNITS	ENGLISH UNITS	METRIC UNITS	ENGLISH UNITS	METRIC UNITS	ENGLISH UNITS	METRIC UNITS
V ANALYTICAL DATA								
A) Front Half								
Probe (mg)							--	3.3475
Cyclone (mg)								
Filter (mg)							--	1.930
Front Half Total (mg)								5.278
grs/SDCF, (mg/m^3)								1.838
#/hr, (kg/hr)								
B) ~~Particulates~~ Imp. 1, 2, & 3 (mg)								.0015
grs/SDCF, (mg/m^3)								
#/hr, (kg/hr)								
Pb (mg) total								5.279
grs/SDCF, (mg/m^3)								1.840
#/hr, (kg/hr)								
C) (mg)								
grs/SDCF, (mg/m^3)								
#/hr, (kg/hr)								
D) Total (mg)								
grs/SDCF, (mg/m^3)								
#/hr, (kg/hr)								
E) Total SO_2 (mg)								
ppm								
grs/SDCF, (mg/m^3)								
#/hr, (kg/hr)								

TABLE 15. ESP INLET #1 LEAD RESULTS

RUN NUMBER	1		2		3		AVERAGE	
	ENGLISH UNITS	METRIC UNITS	ENGLISH UNITS	METRIC UNITS	ENGLISH UNITS	METRIC UNITS	ENGLISH UNITS	METRIC UNIT
ANALYTICAL DATA								
A) Pb Front Half								
Probe (mg)	--	2.0000			--	.0154	--	1.0077
Cyclone (mg)								
Filter (mg)								
Front Half Total (mg)								
grs/SDCF, (mg/m^3)								
#/hr, (kg/hr)								
B) ~~XXXXXXXXXX~~ Imp. 1 & 2								
Pb (mg)	--	.0010			--	.0020	--	.0015
grs/SDCF, (mg/m^3)								
#/hr, (kg/hr)								
(mg)								
grs/SDCF, (mg/m^3)								
#/hr, (kg/hr)								
C) (mg)								
grs/SDCF, (mg/m^3)								
#/hr, (kg/hr)								
D) Total (mg)								
grs/SDCF, (mg/m^3)								
#/hr, (kg/hr)								
E) Total SO_2 (mg)								
ppm								
grs/SDCF, (mg/m^3)								
#/hr, (kg/hr)								

TABLE 16. ESP INLET #2 LEAD RESULTS

RUN NUMBER	1		2		3		AVERAGE	
	ENGLISH UNITS	METRIC UNITS	ENGLISH UNITS	METRIC UNITS	ENGLISH UNITS	METRIC UNITS	ENGLISH UNITS	METRIC UNIT
ANALYTICAL DATA								
A) Pb . Front Half								
Probe (mg)	--	2.4000	--	8.460	--	3.780	--	4.880
Cyclone (mg)								
Filter (mg)								
Front Half Total (mg)								
grs/SDCF, (mg/m^3)								
#/hr, (kg/hr)								
B) ~~XXXXXXXX~~ Imp. 1 & 2								
Pb (mg)	--	.5000	--	.0030	--	.0010	--	.1680
grs/SDCF, (mg/m^3)								
#/hr, (kg/hr)								
(mg)								
grs/SDCF, (mg/m^3)								
#/hr, (kg/hr)								
C) (mg)								
grs/SDCF, (mg/m^3)								
#/hr, (kg/hr)								
D) Total (mg)								
grs/SDCF, (mg/m^3)								
#/hr, (kg/hr)								
E) Total SO_2 (mg)								
ppm								
grs/SDCF, (mg/m^3)								
#/hr, (kg/hr)								

TABLE 17. ESP OUTLET/ACID PLANT INLET LEAD RESULTS.

RUN NUMBER	1		2		3		AVERAGE	
	ENGLISH UNITS	METRIC UNITS	ENGLISH UNITS	METRIC UNITS	ENGLISH UNITS	METRIC UNITS	ENGLISH UNITS	METRIC UNITS
ANALYTICAL DATA								
A) Pb . Front Half								
Probe (mg)	--	1.3800	--	2.0500	--	1.0700	--	1.5067
Cyclone (mg)								
Filter (mg)								
Front Half Total (mg)								
grs/SDCF, (mg/m^3)								
#/hr, (kg/hr)								
B) ~~XXXXXXXXXX~~ Imp.: 1 & 2'								
Pb (mg)	--	.0030	--	.0010	--	< .0010		
grs/SDCF, (mg/m^3)								
#/hr, (kg/hr)								
(mg)								
grs/SDCF, (mg/m^3)								
#/hr, (kg/hr)								
C) (mg)								
grs/SDCF, (mg/m^3)								
#/hr, (kg/hr)								
D) Total (mg)								
grs/SDCF, (mg/m^3)								
#/hr, (kg/hr)								
E) Total SO_2 (mg)								
ppm								
grs/SDCF, (mg/m^3)								
#/hr, (kg/hr)								

TABLE 18. ACID PLANT OUTLET LEAD RESULTS

RUN NUMBER	1		2		3		AVERAGE	
	ENGLISH UNITS	METRIC UNITS	ENGLISH UNITS	METRIC UNITS	ENGLISH UNITS	METRIC UNITS	ENGLISH UNITS	METRIC UNIT
ANALYTICAL DATA								
A) Pb . Front Half								
Probe (mg)	--	.0800	--	.0214	--	.0761	--	.0592
Cyclone (mg)								
Filter (mg)								
Front Half Total (mg)								
grs/SDCF, (mg/m^3)								
#/hr, (kg/hr)								
B) ~~Pxxxxxxxxx~~ Imp-1. & 2								
Pb . (mg)	--	.0010	--	<.0010	--	.0020		
grs/SDCF, (mg/m^3)								
#/hr, (kg/hr)								
. (mg)								
grs/SDCF, (mg/m^3)								
#/hr, (kg/hr)								
C) (mg)								
grs/SDCF, (mg/m^3)								
#/hr, (kg/hr)								
D) Total (mg)								
grs/SDCF, (mg/m^3)								
#/hr, (kg/hr)								
E) Total SO_2 (mg)								
ppm								
grs/SDCF, (mg/m^3)								
#/hr, (kg/hr)								

Phelps-Dodge - Playas, New Mexico; TRW Test Program

The process tested was a converter hooding system which removed fugitive emissions from the converter during the copper blow cycle.

The testing consisted of three arsenic/sulfur dioxide tests and three particle sizing tests which were performed during the copper blow cycles. The testing location was a seven foot duct located between the hooding system and the stack. These tests were coordinated with a process engineer from the Environmental Protection Agency.

During the testing program the following observations and problems were noted.

For the first test, twenty-five minutes per sampling point were used to assure that sampling was done through a complete production cycle. For the second and the third test, twenty minutes per sampling point and a smaller nozzle size was utilized. After 155 minutes of the third test, TRW personnel noticed that the ΔP readings were abnormally low. After checking equipment, the process engineer discovered that the plant operators inadvertently left the dampers on the system in the open position. When the problem was corrected, the ΔP reading increased to the appropriate reading. Thus, during 80 minutes of the sampling period of the third test, dilution air entered the duct which resulted in a non-respresentative sample.

Because of the previous arsenic analysis some sample fractions were consumed, precluding the calculation of lead emission rates. Results are summarized in Table 19.

During the Data Reduction, the meter volume was back calculated to account for sulfur dioxide that was removed by the three 10% hydrogen peroxide impingers. The back calculation for sulfur dioxide was accomplished in the following order. First, parts per million sulfur dioxide at standard consitions were calculated. Then parts per million were converted to a fraction by dividing by 10^6. This number was added to one and the result multiplied by the volume of gas collected through the dry gas meter at standard conditions. The result of multiplication yielded the true gas volume collected at standard conditions. Since SO_2 removal by the peroxide impingers does not reach the dry gas meter, corrected values for dry gas meter volumes (at meter conditions) found on the summary sheets will be slightly higher than those obtained from the field data sheets.

TABLE 19. CONVERTER FUGITIVE EMISSIONS LEAD RESULTS

RUN NUMBER	1		2		3		AVERAGE	
	ENGLISH UNITS	METRIC UNITS	ENGLISH UNITS	METRIC UNITS	ENGLISH UNITS	METRIC UNITS	ENGLISH UNITS	METRIC UNIT
ANALYTICAL DATA								
A) Pb Front Half								
Probe (mg)	--	5.990	--	3.840	--	3.530	--	4.4533
Cyclone (mg)								
Filter (mg)								
Front Half Total (mg)								
grs/SDCF, (mg/m^3)								
#/hr, (kg/hr)								
B) ~~Particulates~~ Imp. 1, 2, & 3								
Pb (mg)	--	.2300	--	.6450	--	.0080	--	.2936
grs/SDCF, (mg/m^3)								
#/hr, (kg/hr)								
(mg)								
grs/SDCF, (mg/m^3)								
#/hr, (kg/hr)								
C) (mg)								
grs/SDCF, (mg/m^3)								
#/hr, (kg/hr)								
D) Total (mg)								
grs/SDCF, (mg/m^3)								
#/hr, (kg/hr)								
E) Total SO_2 (mg)								
ppm								
grs/SDCF, (mg/m^3)								
#/hr, (kg/hr)								

ASARCO - Tacoma, Washington; TRW Test Program

Tables 20 and 21 give the results of the inlet and outlet tests at the roaster baghouse. The inlet and outlet tests were done simultaneously during normal operating periods of the roaster. The only difficulty encountered during these test was the plugging of the inlet location nozzle several times during these runs. The material plugging the nozzle was recovered into the probe rinse container and the test was continued.

Table 22 presents the results of the tests done at the outlet from the reverberatory furnace electrostatic precipitator. This location required vertical sampling with a 15 foot probe and a teflon flex line between the probe and the filter (see diagram #2). The duct had a significant amount of sediment in the bottom which precluded sampling at several traverse points. Since the plant was on curtailed production due to meteorological conditions some delay was encountered in completing these tests.

The data from tests done at the matte tapping, slag tapping, calcine discharge, and converter slag return are given in Tables 23, 24, 25 and 29, respectively. The activities feeding these fugitive systems occur for short periods throughout the converter cycle, and consequently sampling had to be timed to coincide with this intermittant schedule. Matte and slag tapping fugitive emissions were sampled over 5 to 8 minute periods when matte or slag were being drawn from the reverberatory furnace. Sampling was coordinated by EPA observers at the matte tapping and slag tapping areas who alerted the sampling teams by transceiver as to when to start and stop sampling.

The emissions from the converter slag return were sampled during 1 to 3 minute intervals when slag was returned to the reverberatory furnace from the converters. This procedure only occurred five to six times per day, so that three days of testing were required to collect a large enough sample for analysis.

Results of the tests on the arsenic baghouse are summarized in Tables 26, 27 and 28.

Data collected from tests done on the converter fugitive emissions collected by hooding during the copper blow and full cycles are summarized in Tables 30 and 31. Fugitive emissions not collected by the hooding system were also sampled using anemometer to continuously record flow past the sampling point. Results of these tests are summarized in Tables 32, 33 and 34.

TABLE 20 ROASTER BAGHOUSE LEAD RESULTS

RUN NUMBER	1		2		3		AVERAGE	
	ENGLISH UNITS	METRIC UNITS	ENGLISH UNITS	METRIC UNITS	ENGLISH UNITS	METRIC UNITS	ENGLISH UNITS	METRIC UNIT
V ANALYTICAL DATA								
A) Front Half								
Probe (mg) (NaOH)	-	.1800	-	3.3000	-	.5270	-	1.3357
~~Cyclone (mg)~~ Probe (HNO_3)	-	1.3400	-	.6640	-	1.370	-	1.1247
Filter (mg)								
Front Half Total (mg)								
grs/SDCF, (mg/m^3)								
#/hr, (kg/hr)								
B) Particulates - Imp 1 & 2 (NaOH) (mg)	-	.0020	-	.0010	-	.0020	-	.0017
grs/SDCF, (mg/m^3) Imp 1 & 2 (HNO_3)	-	-	-	.0040	-	-	-	-
#/hr, (kg/hr)								
(mg)								
grs/SDCF, (mg/m^3)								
#/hr, (kg/hr)								
C) (mg)								
grs/SDCF, (mg/m^3)								
#/hr, (kg/hr)								
D) Total (mg)								
grs/SDCF, (mg/m^3)								
#/hr, (kg/hr)								
E) Total SO_2 (mg)								
ppm								
grs/SDCF, (mg/m^3)								
#/hr, (kg/hr)								

TABLE 21 ROASTER BAGHOUSE OUTLET LEAD RESULTS

RUN NUMBER	1		2		3		AVERAGE	
	ENGLISH UNITS	METRIC UNITS	ENGLISH UNITS	METRIC UNITS	ENGLISH UNITS	METRIC UNITS	ENGLISH UNITS	METRIC UNIT
V ANALYTICAL DATA								
A) b Front Half								
Probe (mg) (NaOH)	-	.0170	-	.0290	-	.0350	-	.0270
~~Cyclone (mg)~~ Probe (HNO_3)	-	-	-	.0080	-	.0720	-	
Filter (mg)								
Front Half Total (mg)								
grs/SDCF, (mg/m^3)								
#/hr, (kg/hr)								
B) Particulates - IMP 1 & 2(NaOH)								
____ (mg) Imp 1 & 2(HNO_3)	-	.0010	-	.0020	-	.0020		.0017
grs/SDCF, (mg/m^3)								
#/hr, (kg/hr)								
____ (mg)								
grs/SDCF, (mg/m^3)								
#/hr, (kg/hr)								
C) ____ (mg)								
grs/SDCF, (mg/m^3)								
#/hr, (kg/hr)								
D) Total ____ (mg)								
grs/SDCF, (mg/m^3)								
#/hr, (kg/hr)								
E) Total SO_2 (mg)								
ppm								
grs/SDCF, (mg/m^3)								
#/hr, (kg/hr)								

TABLE 22 ESP OUTLET LEAD RESULTS

RUN NUMBER	1		2		3		AVERAGE	
	ENGLISH UNITS	METRIC UNITS	ENGLISH UNITS	METRIC UNITS	ENGLISH UNITS	METRIC UNITS	ENGLISH UNITS	METRIC UNIT
V ANALYTICAL DATA								
A) Pb . Front Half								
Probe (mg) (NaOH)	-	3.3000	-	.0430	-	1.730	-	1.6910
~~Cyclone (mg)~~ Probe (HNO_3)	-	1.1000	-	.3100	-	-	-	-
Filter (mg)								
Front Half Total (mg)								
grs/SDCF, (mg/m^3)								
#/hr, (kg/hr)								
B) ~~Particulates~~ Imp 1 & 2 (NaOH)								
____ (mg) Imp 142 (HNO_3)	-	1.0010	-	.0020	-	.0020	-	-
grs/SDCF, (mg/m^3)	-	.0010	-	.0160	-			
#/hr, (kg/hr)								
____ (mg)								
grs/SDCF, (mg/m^3)								
#/hr, (kg/hr)								
C) ____ (mg)								
grs/SDCF, (mg/m^3)								
#/hr, (kg/hr)								
D) Total ____ (mg)								
grs/SDCF, (mg/m^3)								
#/hr, (kg/hr)								
E) Total SO_2 (mg)								
ppm								
grs/SDCF, (mg/m^3)								
#/hr, (kg/hr)								

TABLE 23 MATTE TAPPING LEAD RESULTS

RUN NUMBER	1		2		3		AVERAGE	
	ENGLISH UNITS	METRIC UNITS	ENGLISH UNITS	METRIC UNITS	ENGLISH UNITS	METRIC UNITS	ENGLISH UNITS	METRIC UNIT
V ANALYTICAL DATA								
A) Pv Front Half								
Probe (mg) (NaOHRMSe)	-	4.0800	-	4.6500	-	4.6880	-	4.4727
~~Cyclone (mg)~~ Probe (HNO_3 Rinse)	-	0.2250	-	-	-	-	-	-
Filter (mg)								
Front Half Total (mg)								
grs/SDCF, (mg/m^3)								
#/hr, (kg/hr)								
B) ~~Particulates~~ Imp 1 & 2 (NaOH)								
Pb (mg) " " (HNO_3)	-	.0070	-	.0010	-	.0030	-	.0037
grs/SDCF, (mg/m^3)	-	.0007	-	-	-	-	-	-
#/hr, (kg/hr)								
(mg)								
grs/SDCF, (mg/m^3)								
#/hr, (kg/hr)								
C) (mg)								
grs/SDCF, (mg/m^3)								
#/hr, (kg/hr)								
D) Total (mg)								
grs/SDCF, (mg/m^3)								
#/hr, (kg/hr)								
E) Total SO_2 (mg)								
ppm								
grs/SDCF, (mg/m^3)								
#/hr, (kg/hr)								

TABLE 24 SLAG TAPPING LEAD RESULTS

RUN NUMBER	1		2		3		AVERAGE	
	ENGLISH UNITS	METRIC UNITS	ENGLISH UNITS	METRIC UNITS	ENGLISH UNITS	METRIC UNITS	ENGLISH UNITS	METRIC UNIT
V ANALYTICAL DATA								
A) Pb Front Half								
Probe (mg) (NaOH)	-	.8660	-	2.140	-	.8340	-	1.2800
Cyclone (mg) Probe (HNO_3)	-	.0830	-	-	-	-	-	-
Filter (mg)								
Front Half Total (mg)								
grs/SDCF, (mg/m^3)								
#/hr, (kg/hr)								
B) Particulates - Imp 1 & 2 (NaOH)								
____ (mg) Imp 1 & 2 (HNO_3)	-	.0020	-	.0050	-	.0060	-	.0043
grs/SDCF, (mg/m^3)	-	.0040	-	-	-	-	-	-
#/hr, (kg/hr)								
____ (mg)								
grs/SDCF, (mg/m^3)								
#/hr, (kg/hr)								
C) ____ (mg)								
grs/SDCF, (mg/m^3)								
#/hr, (kg/hr)								
D) Total ____ (mg)								
grs/SDCF, (mg/m^3)								
#/hr, (kg/hr)								
E) Total SO_2 (mg)								
ppm								
grs/SDCF, (mg/m^3)								
#/hr, (kg/hr)								

TABLE 25 CALCINE DISCHARGE LEAD RESULTS

RUN NUMBER	1		2		3		AVERAGE	
	ENGLISH UNITS	METRIC UNITS	ENGLISH UNITS	METRIC UNITS	ENGLISH UNITS	METRIC UNITS	ENGLISH UNITS	METRIC UNIT
V ANALYTICAL DATA								
A) Pb Front Half								
Probe (mg)	-	2.3100	-	2.5000	-	.1860	-	1.6653
Cyclone (mg)								
Filter (mg)								
Front Half Total (mg)								
grs/SDCF, (mg/m^3)								
#/hr, (kg/hr)								
B) ~~Particulates~~ ~~XXXXXXXX~~ Imp 1 & 2 Pb (mg)	-	.0080	-	.0050	-	.0070	-	.0067
grs/SDCF, (mg/m^3)								
#/hr, (kg/hr)								
(mg)								
grs/SDCF, (mg/m^3)								
#/hr, (kg/hr)								
C) (mg)								
grs/SDCF, (mg/m^3)								
#/hr, (kg/hr)								
D) Total (mg)								
grs/SDCF, (mg/m^3)								
#/hr, (kg/hr)								
E) Total SO_2 (mg)								
ppm								
grs/SDCF, (mg/m^3)								
#/hr, (kg/hr)								

TABLE 26 ARSENIC BAGHOUSE INLET (ARSENIC KITCHEN) LEAD RESULTS

RUN NUMBER	1		2		3		AVERAGE	
	ENGLISH UNITS	METRIC UNITS	ENGLISH UNITS	METRIC UNITS	ENGLISH UNITS	METRIC UNITS	ENGLISH UNITS	METRIC UNIT
V ANALYTICAL DATA								
A) Front Half								
Probe (mg) (NaOH)	-	5.3700	-	3.200	-	1.5800	-	3.3833
Cyclone (mg) Probe (HNO_3)	-	-	-	-	-	.2280	-	-
Filter (mg)								
Front Half Total (mg)								
grs/SDCF, (mg/m^3)								
#/hr, (kg/hr)								
B) Particulates - Imp. 1. &2								
Pb (mg)	-	.0020	-	.0290	-	.0150	-	.0153
grs/SDCF, (mg/m^3)								
#/hr, (kg/hr)								
(mg)								
grs/SDCF, (mg/m^3)								
#/hr, (kg/hr)								
C) (mg)								
grs/SDCF, (mg/m^3)								
#/hr, (kg/hr)								
D) Total (mg)								
grs/SDCF, (mg/m^3)								
#/hr, (kg/hr)								
E) Total SO_2 (mg)								
ppm								
grs/SDCF, (mg/m^3)								
#/hr, (kg/hr)								

TABLE 27 ARSENIC BAGHOUSE INLET (METALLIC ARSENIC) LEAD RESULTS

RUN NUMBER	1		2		3		AVERAGE	
	ENGLISH UNITS	METRIC UNITS	ENGLISH UNITS	METRIC UNITS	ENGLISH UNITS	METRIC UNITS	ENGLISH UNITS	METRIC UNIT
V ANALYTICAL DATA								
A) Front Half								
Probe (mg) (NaOH)	-	.2440	-	1.1000	-	.1320	-	.4920
~~Cyclone (mg)~~ Probe (HNO_3)	-	-	-	.0750	-	-	-	-
Filter (mg)								
Front Half Total (mg)								
grs/SDCF, (mg/m^3)								
#/hr, (kg/hr)								
B) ~~Impingers~~ Imp. 1 & 2 (NaOH)								
~~Pb~~ (mg) Imp 1 & 2 (HNO_3)	-	.0020	-	.0090	-	.0100	-	.0070
grs/SDCF, (mg/m^3)	-	-	-	.0030	-	-	-	-
#/hr, (kg/hr)								
_____ (mg)								
grs/SDCF, (mg/m^3)								
#/hr, (kg/hr)								
C) _____ (mg)								
grs/SDCF, (mg/m^3)								
#/hr, (kg/hr)								
D) Total _____ (mg)								
grs/SDCF, (mg/m^3)								
#/hr, (kg/hr)								
E) Total SO_2 (mg)								
ppm								
grs/SDCF, (mg/m^3)								
#/hr, (kg/hr)								

TABLE 28 ARSENIC BAGHOUSE OUTLET LEAD RESULTS

RUN NUMBER	1		2		3		AVERAGE	
	ENGLISH UNITS	METRIC UNITS	ENGLISH UNITS	METRIC UNITS	ENGLISH UNITS	METRIC UNITS	ENGLISH UNITS	METRIC UNIT
V ANALYTICAL DATA								
A) Pb Front Half								
Probe (mg) (NaOH)	-	.4150	-	.1190	-	.6100	-	.3813
Cyclone (mg) Probe (HNO_3)	-	-	-	.0350	-	-	-	-
Filter (mg)								
Front Half Total (mg)								
grs/SDCF, (mg/m^3)								
#/hr, (kg/hr)								
B) ~~PAXXXXXXXX~~ - Imp 1 & 2 (NaOH)								
____ (mg) Imp 1 & 2 (HNO_3)	-	.0080	-	.0020	-	.0040	-	.0047
grs/SDCF, (mg/m^3)	-	-	-	.0030	-	-	-	-
#/hr, (kg/hr)								
____ (mg)								
grs/SDCF, (mg/m^3)								
#/hr, (kg/hr)								
C) ____ (mg)								
grs/SDCF, (mg/m^3)								
#/hr, (kg/hr)								
D) Total ____ (mg)								
grs/SDCF, (mg/m^3)								
#/hr, (kg/hr)								
E) Total SO_2 (mg)								
ppm								
grs/SDCF, (mg/m^3)								
#/hr, (kg/hr)								

TABLE 29 CONVERTER SLAG RETURN LEAD RESULTS

RUN NUMBER	1		2		3		AVERAGE	
	ENGLISH UNITS	METRIC UNITS	ENGLISH UNITS	METRIC UNITS	ENGLISH UNITS	METRIC UNITS	ENGLISH UNITS	METRIC UNITS
V ANALYTICAL DATA								
A) Pb Front Half								
Probe (mg)	-	.2670	-	-	-	-	-	-
Cyclone (mg)								
Filter (mg)								
Front Half Total (mg)								
grs/SDCF, (mg/m^3)								
#/hr, (kg/hr)								
B) ~~Particulates~~ Imp 1 & 2								
Pb (mg)	-	.0020	-	-	-	-	-	-
grs/SDCF, (mg/m^3)								
#/hr, (kg/hr)								
(mg)								
grs/SDCF, (mg/m^3)								
#/hr, (kg/hr)								
C) (mg)								
grs/SDCF, (mg/m^3)								
#/hr, (kg/hr)								
D) Total (mg)								
grs/SDCF, (mg/m^3)								
#/hr, (kg/hr)								
E) Total SO_2 (mg)								
ppm								
grs/SDCF, (mg/m^3)								
#/hr, (kg/hr)								

TABLE 30.

Converter Full Cycle Lead Results

RUN NUMBER	1		2		3		AVERAGE	
	ENGLISH UNITS	METRIC UNITS	ENGLISH UNITS	METRIC UNITS	ENGLISH UNITS	METRIC UNITS	ENGLISH UNITS	METRIC UNIT
V ANALYTICAL DATA								
A) Pb Front Half								
Probe (mg)	-	16.9100	-	23.3000	-	37.0000	-	25.7367
Cyclone (mg)	-	-	-	-	-	-	-	-
Filter (mg)	-	0.5800	-	0.4900	-	1.5000	-	0.7067
Front Half Total (mg)	-	17.4900	-	23.7900	-	38.0500		26.4433
grs/SDCF, (mg/m^3)								
#/hr, (kg/hr)								
B) ~~xxxxxxxxx~~ Imp 1 & 2 (mg)	-	0.9800	-	0.1200	-	0.00200	-	0.3733
grs/SDCF, (mg/m^3)								
#/hr, (kg/hr)								
Pb (mg) Total	-	18.4700	-	23.9100	-	38.0700	-	26.8167
grs/SDCF, (mg/m^3)	-	6.8357	-	20.1602	-	36.226	-	20.7395
#/hr, (kg/hr)	-	0.4692	-	1.4686	-	2.7397		1.5592
C) (mg)								
grs/SDCF, (mg/m^3)								
#/hr, (kg/hr)								
D) Total (mg)								
grs/SDCF, (mg/m^3)								
#/hr, (kg/hr)								
E) Total SO_2 (mg)								
ppm								
grs/SDCF, (mg/m^3)								
#/hr, (kg/hr)								

TABLE 31 CONVERTER COPPER BLOW CYCLE LEAD RESULTS

RUN NUMBER	1		2		3		AVERAGE	
	ENGLISH UNITS	METRIC UNITS	ENGLISH UNITS	METRIC UNITS	ENGLISH UNITS	METRIC UNITS	ENGLISH UNITS	METRIC UNIT
V ANALYTICAL DATA								
A) Pb Front Half								
Probe (mg)	-	48.8000	-	21.5000	-	24.000	-	31.4333
Cyclone (mg)	-	-	-	-	-	-	-	-
Filter (mg)	-	1.0600	-	0.0400	-	1.4000	-	0.8333
Front Half Total (mg)	-	49.8600	-	21.5400	-	25.4000	-	32.1667
grs/SDCF, (mg/m^3)								
#/hr, (kg/hr)								
B) ~~Particulate~~ Imp 1 & 2 (mg)	-	0.9300	-	0.0300	-	0.0600	-	0.3400
grs/SDCF, (mg/m^3)								
#/hr, (kg/hr)								
Pb (mg) Total	-	50.7900	-	21.5700	-	25.4600	-	32.6167
grs/SDCF, (mg/m^3)	-	49.2151	-	22.3756	-	23.1665	-	31.5857
#/hr, (kg/hr)	-	3.3846	-	1.4415	-	1.7789		2.2017
C) (mg)								
grs/SDCF, (mg/m^3)								
#/hr, (kg/hr)								
D) Total (mg)								
grs/SDCF, (mg/m^3)								
#/hr, (kg/hr)								
E) Total SO_2 (mg)								
ppm								
grs/SDCF, (mg/m^3)								
#/hr, (kg/hr)								

TABLE 32. CONVERTER FUGITIVE # 1 (E) LEAD RESULTS

RUN NUMBER	1		2		3		AVERAGE	
	ENGLISH UNITS	METRIC UNITS	ENGLISH UNITS	METRIC UNITS	ENGLISH UNITS	METRIC UNITS	ENGLISH UNITS	METRIC UNIT
V ANALYTICAL DATA								
A) Pb . Front Half								
Probe (mg)	-	3.3000	-	9.4000	-	1.8000	-	4.8333
Cyclone (mg)	-	-	-	-	-	-	-	
Filter (mg)	-	4.4000	-	2.0000	-	11.5000	-	5.9667
Front Half Total (mg)	-	7.7000	-	11.4000	-	13.3000	-	10.80000
grs/SDCF, (mg/m^3)								
#/hr, (kg/hr)								
B) ~~Replicates~~ - Impr-1 & 2								
(mg)	-	0.4200	-	0.0200	-	0.0100	-	0.1500
grs/SDCF, (mg/m^3)								
#/hr, (kg/hr)								
Pb (mg) Total								
grs/SDCF, (mg/m^3)	-	8.1200	-	11.4200	-	13.3100	-	10.9467
#/hr, (kg/hr)	-	0.4549	-	0.5382	-	0.7899	-	0.5943
	-	0.0544	-	0.0762	-	0.1102	-	0.0803
C) (mg)								
grs/SDCF, (mg/m^3)								
#/hr, (kg/hr)								
D) Total (mg)								
grs/SDCF, (mg/m^3)								
#/hr, (kg/hr)								
E) Total SO_2 (mg)								
ppm								
grs/SDCF, (mg/m^3)								
#/hr, (kg/hr)								

TABLE 33.

CONVERTER FUGITIVE #2 (M) LEAD RESULTS

RUN NUMBER	1		2		3		AVERAGE	
	ENGLISH UNITS	METRIC UNITS	ENGLISH UNITS	METRIC UNITS	ENGLISH UNITS	METRIC UNITS	ENGLISH UNITS	METRIC UNIT
V ANALYTICAL DATA								
A) Pb Front Half								
Probe (mg)	-	1.9000	-	3.7000	-	3.9000	-	3.1667
Cyclone (mg)	-	-	-	-	-	-	-	-
Filter (mg)	-	1.000	-	1.2000	-	8.0000	-	1.0000
Front Half Total (mg)	-	2.9000	-	4.9000	-	11.9000	-	6.5667
grs/SDCF, (mg/m^3)								
#/hr, (kg/hr)								
B) ~~Particulates~~ - Imp. ; 1 & 2								
~~Pb~~ (mg)	-	0.6200	-	0.0100	-	0.0200	-	0.2167
grs/SDCF, (mg/m^3)								
#/hr, (kg/hr)								
Pb (mg) Total	-	3.5200	-	4.9100	-	11.9200	-	6.7833
grs/SDCF, (mg/m^3)	-	0.1954	-	0.2326	-	0.7091	-	0.3790
#/hr, (kg/hr)	-	0.0233	-	0.0320	-	0.0981	-	0.0511
C) (mg)								
grs/SDCF, (mg/m^3)								
#/hr, (kg/hr)								
D) Total (mg)								
grs/SDCF, (mg/m^3)								
#/hr, (kg/hr)								
E) Total SO_2 (mg)								
ppm								
grs/SDCF, (mg/m^3)								
#/hr, (kg/hr)								

CONVERTER FUGITIVE # 3 (W) TABLE 34. LEAD RESULTS

RUN NUMBER	1		2		3		AVERAGE	
	ENGLISH UNITS	METRIC UNITS	ENGLISH UNITS	METRIC UNITS	ENGLISH UNITS	METRIC UNITS	ENGLISH UNITS	METRIC UNIT
V ANALYTICAL DATA								
A) Pb Front Half								
Probe (mg)	-	1.3000	-	2.5000	-	3.1000	-	2.3000
Cyclone (mg)	-	-	-	-	-	-	-	-
Filter (mg)	-	5.5000	-	6.6000	-	9.4000	-	7.1667
Front Half Total (mg)	-	6.8000	-	9.1000	-	12.5000	-	9.4667
grs/SDCF, (mg/m^3)								
#/hr, (kg/hr)								
B) Particulates - Imp. 1 & 2								
Pb (mg)	-	0.0500	-	0.1700	-	0.0300	-	0.0833
grs/SDCF, (mg/m^3)								
#/hr, (kg/hr)								
Pb (mg)	-	6.8500	-	9.2700	-	12.5300	-	9.5500
grs/SDCF, (mg/m^3)	-	0.3306	-	0.4992	-	0.8131	-	0.5476
#/hr, (kg/hr)	-	0.0395	-	0.0709	-	0.1144	-	0.0749
C) (mg)								
grs/SDCF, (mg/m^3)								
#/hr, (kg/hr)								
D) Total (mg)								
grs/SDCF, (mg/m^3)								
#/hr, (kg/hr)								
E) Total SO_2 (mg)								
ppm								
grs/SDCF, (mg/m^3)								
#/hr, (kg/hr)								

Kennecott - Magma, Utah; TRW Test Program

The field sampling program encountered the following minor problems which are outlined below with respect to the individual sampling locations.

During the field sampling at the matte tapping fugitive emission system and the slag tapping fugitive emission system, the sampling program required long days due to the intermittent process operation and days of reduced operation. At the slag tapping fugitive emission duct there were two modifications in the sampling procedure required. Only one port was located on the duct which required that both traverses be performed through the same port utilizing the pythagoream calculations. The sampling train was modified to allow for the two traverses through the single sampling port. A teflon flex line was inserted between the probe and heater box to assist in maneuvering the probe into the proper placement. After the testing the flex line was cleaned with a probe brush and .1N NaOH. The solution was placed in the probe rinse bottle and saved for analysis.

Testing the converter fugitive emission system and the acid plant inlet required TRW personnel to adjust the working schedule to fit the cyclic process operation of the converter unit. Due to lack of space at the converter fugitive emission duct sampling position, TRW was required to utilize the flex lines between the probes and heater boxes on each of the tests. After each test the flex line was cleaned with .1N NaOH and a probe brush. The solution was placed in the probe rinse bottle and saved for analysis.

Weather forced TRW personnel to curtail the field sampling on Friday, November 10, 1978. TRW personnel returned on Monday, November 12, 1978 to complete the field sampling on the concentrate dryer fugitive emission system.

Testing the concentrate dryer fugitive emission system required the test ports to be placed in the fiberglass stack. Due to the working space and the fiberglass stack, TRW utilized the flex line inserted between the probe and the heater box to assist in performing the sampling traverses. Testing at the concentrate dryer fugitive emission system was performed under low ambient temperature which ranged from 20°F to 30°F.

The average lead emission rate of the concentrate dryer fugitive emission system (Table 40) was 0.1 Kg/hr. The fugitive emissions of lead from the matte tapping and slag tapping, summarized in Tables 35 and 36, averaged 0.7 Kg/hr and 0.04 Kg/hr, respectively. Fugitive lead emissions from the full cycle converter and rollout converter cycle both averaged about 0.4 Kg/hr and are summarized in Tables 38 and 39. The acid plant inlet (see Table 37) had a lead concentration of 2.5 Kg/hr.

During the data reduction, the meter volume was back calculated to account for sulfur dioxide that was removed by the three 10% hydrogen peroxide impingers. The back calculation for sulfur dioxide was accomplished in the following order. First, parts per million sulfur dioxide at standard conditions was calculated. Then parts per million was converted to a fraction by dividing by 10^6. This number was added to one and the result multiplied by volume of gas collected through dry gas meter at standard conditions. The result of multiplication yielded the actual gas volume at standard conditions collected.

TABLE 35 MATTE TAPPING LEAD RESULTS

RUN NUMBER	1		2		3		AVERAGE	
	ENGLISH UNITS	METRIC UNITS	ENGLISH UNITS	METRIC UNITS	ENGLISH UNITS	METRIC UNITS	ENGLISH UNITS	METRIC UNITS
V ANALYTICAL DATA								
A) Pb . Front Half								
Probe (mg)	-	.6000	-	.8160	-	.6790	-	.6983
Cyclone (mg)	-	-	-	-	-	-	-	-
Filter (mg)	-	16.3000	-	6.65000	-	9.8500	-	10.9333
Front Half Total (mg)								
grs/SDCF, (mg/m^3)								
#/hr, (kg/hr)								
B) ~~Cyclones~~ Imp 1&2								
Pb . (mg)	-	.0010	-	.0040	-	.0020	-	.0023
grs/SDCF, (mg/m^3)								
#/hr, (kg/hr)								
Pb (mg) Total	-	16.9010	-	7.4700	-	10.5310	-	11.6340
grs/SDCF, (mg/m^3)	-	9.0380	-	5.1875	-	6.8383	-	7.0213
#/hr, (kg/hr)	-	0.9805	-	0.5445	-	0.6473	-	0.7241
C) _____ (mg)								
grs/SDCF, (mg/m^3)								
#/hr, (kg/hr)								
D) Total _____ (mg)								
grs/SDCF, (mg/m^3)								
#/hr, (kg/hr)								
E) Total SO_2 (mg)								
ppm								
grs/SDCF, (mg/m^3)								
#/hr, (kg/hr)								

TABLE 36 SLAG TAPPING LEAD RESULTS

RUN NUMBER	1		2		3		AVERAGE	
	ENGLISH UNITS	METRIC UNITS	ENGLISH UNITS	METRIC UNITS	ENGLISH UNITS	METRIC UNITS	ENGLISH UNITS	METRIC UNITS
V ANALYTICAL DATA								
A) Pb . Front Half								
Probe (mg)	-	.1110	-	.2220	-	.1630	-	.1953
Cyclone (mg)	-	-	-	-	-	-	-	-
Filter (mg)	-	.2750	-	2.0800	-	1.7900	-	1.3817
Front Half Total (mg)	-	.03860	-	2.3020	-	1.9530	-	1.5460
grs/SDCF, (mg/m^3)								
#/hr, (kg/hr)								
B) XXXXXXXX -Imp 1.-& 2								
(mg)	-	.0080	-	.0060	-	.0030	-	.0057
grs/SDCF, (mg/m^3)								
#/hr, (kg/hr)								
Pb (mg) Total	-	0.3940	-	2.3080	-	1.9560	-	1.5527
grs/SDCF, (mg/m^3)	-	0.3456	-	0.6768	-	0.5753	-	0.5326
#/hr, (kg/hr)	-	0.0299	-	0.0569	-	0.0447	-	0.0438
C) (mg)								
grs/SDCF, (mg/m^3)								
#/hr, (kg/hr)								
D) Total (mg)								
grs/SDCF, (mg/m^3)								
#/hr, (kg/hr)								
E) Total SO_2 (mg)								
ppm								
grs/SDCF, (mg/m^3)								
#/hr, (kg/hr)								

TABLE 37 ACID PLANT INLET LEAD RESULTS

RUN NUMBER	1		2		3		AVERAGE	
	ENGLISH UNITS	METRIC UNITS	ENGLISH UNITS	METRIC UNITS	ENGLISH UNITS	METRIC UNITS	ENGLISH UNITS	METRIC UNITS
V ANALYTICAL DATA								
A) Pb . Front Half	-	27.2000	-	46.6000	-	54.4000	-	33.6680
Probe (mg)	-	-	-	-	-	-	-	-
Cyclone (mg)	-	2.9000	-	1.6000	-	1.35000	-	1.9500
Filter (mg)	-	30.1000	-	48.2000	-	55.7500	-	44.6833
Front Half Total (mg)								
grs/SDCF, (mg/m^3)								
#/hr, (kg/hr)								
B) ~~Particulate~~ Imp 1 & 2 (mg)	-	0.0040	-	.0020	-	.1030	-	9.1017
grs/SDCF, (mg/m^3)								
#/hr, (kg/hr)								
Pb (mg) Total	-	30.1040	-	48.2020	-	55.8530	-	44.7197
grs/SDCF, (mg/m^3)	-	21.0517	-	35.1839	-	32.8950	-	32.0435
#/hr, (kg/hr)	-	1.7168	-	2.6747	-	3.0273	-	2.4696
C) (mg)								
grs/SDCF, (mg/m^3)								
#/hr, (kg/hr)								
D) Total (mg)								
grs/SDCF, (mg/m^3)								
#/hr, (kg/hr)								
E) Total SO_2 (mg)								
ppm								
grs/SDCF, (mg/m^3)								
#/hr, (kg/hr)								

TABLE 38 ROLLOUT CONVERTER FUGITIVE LEAD RESULTS

RUN NUMBER	1		2		3		AVERAGE	
	ENGLISH UNITS	METRIC UNITS	ENGLISH UNITS	METRIC UNITS	ENGLISH UNITS	METRIC UNITS	ENGLISH UNITS	METRIC UNITS
V ANALYTICAL DATA								
A) Pb Front Half								
Probe (mg)	-	.5110	-	1.110	-	-	-	.5403
Cyclone (mg)	-	-	-	-	-	-		-
Filter (mg)	-	3.2600	-	5.1500	-	-	-	4.2050
Front Half Total (mg)	-	3.7710	-	6.2600	-	-	-	5.0155
grs/SDCF, (mg/m^3)								
#/hr, (kg/hr)								
B) ~~Particulates~~ Imp 1 & 2								
Pb (mg)	-	.0050	-	.0030	-	-	-	.0040
grs/SDCF, (mg/m^3)								
#/hr, (kg/hr)								
Pb (mg) Total	-	3.7760	-	6.2630	-	-	-	5.0195
grs/SDCF, (mg/m^3)	-	2.521	-	4.8177	-	-	-	3.4349
#/hr, (kg/hr)	-	0.2906	-	0.6696	-	-	-	0.4801
C) (mg)								
grs/SDCF, (mg/m^3)								
#/hr, (kg/hr)								
D) Total (mg)								
grs/SDCF, (mg/m^3)								
#/hr, (kg/hr)								
E) Total SO_2 (mg)								
ppm								
grs/SDCF, (mg/m^3)								
#/hr, (kg/hr)								

TABLE 39 FULL CYCLE CONVERTER FUGITIVE LEAD RESULTS

RUN NUMBER	1		2		3		AVERAGE	
	ENGLISH UNITS	METRIC UNITS	ENGLISH UNITS	METRIC UNITS	ENGLISH UNITS	METRIC UNITS	ENGLISH UNITS	METRIC UNITS
V ANALYTICAL DATA								
A) Pb . Front Half								
Probe (mg)	-	1.7300	-	3.6000	-	4.5600	-	3.2967
Cyclone (mg)	-	-	-	-	-	-	-	-
Filter (mg)	-	10.6000	-	10.2000	-	1.5600	-	7.4533
Front Half Total (mg)		12.3300	-	13.8000	-	6.1200	-	10.7500
grs/SDCF, (mg/m^3)								
#/hr, (kg/hr)								
B) ~~Particulates~~ Imp. 1 & 2								
Pb (mg)	-	.0030	-	1.2500	-	.0050	-	.4193
grs/SDCF, (mg/m^3)								
#/hr, (kg/hr)								
Pb (mg) Total	-	12.3330	-	15.0500	-	6.1250	-	11.1693
grs/SDCF, (mg/m^3)	-	2.8287	-	3.6797	-	1.5855	-	2.6980
#/hr, (kg/hr)	-	0.4552	-	0.5641	-	0.2505	-	0.4233
C) (mg)								
grs/SDCF, (mg/m^3)								
#/hr, (kg/hr)								
D) Total (mg)								
grs/SDCF, (mg/m^3)								
#/hr, (kg/hr)								
E) Total SO_2 (mg)								
ppm								
grs/SDCF, (mg/m^3)								
#/hr, (kg/hr)								

TABLE 40 CONCENTRATE DRIER LEAD RESULTS

RUN NUMBER	1		2		3		AVERAGE	
	ENGLISH UNITS	METRIC UNITS	ENGLISH UNITS	METRIC UNITS	ENGLISH UNITS	METRIC UNITS	ENGLISH UNITS	METRIC UNIT
V ANALYTICAL DATA								
A) Pb Front Half								
Probe (mg)	-	.7580	-	.3210	-	.5070	-	.5620
~~Cyclone (mg)~~ F6X line	-	-	-		-	.0270	-	-
Filter (mg)	-	1.100	-	8900	-	1.4000	-	1.1300
Front Half Total (mg)	-	1.8580	-	1.2110	-	1.9340		1.6677
grs/SDCF, (mg/m^3)	-	0.9153	-	0.5995	-	0.9343	-	0.8164
#/hr, (kg/hr)	-	0.1128	-	0.0724	-	0.1121		0.0991
B) XXXXXXX Imp 1 & 2 (mg)	-	.0040	-	.0020	-	.0050	-	.0037
grs/SDCF, (mg/m^3)								
#/hr, (kg/hr)								
Pb (mg)	-	1.8620	-	1.2130	-	1.1390	-	1.6713
grs/SDCF, (mg/m^3)	-	0.9172	-	0.6005	-	0.9367	-	0.8181
#/hr, (kg/hr)	-	0.1131	-	0.0726	-	0.1124	-	0.0994
C) (mg)								
grs/SDCF, (mg/m^3)								
#/hr, (kg/hr)								
D) Total (mg)								
grs/SDCF, (mg/m^3)								
#/hr, (kg/hr)								
E) Total SO_2 (mg)								
ppm								
grs/SDCF, (mg/m^3)								
#/hr, (kg/hr)								

Anaconda - Butte, Monsanto Test Program

No report on this test effort was available in time to be included in this report. However, the results of the lead analysis run on the samples available are in Tables 41, 42 and 43.

TABLE 41. LOCATION 2A.

RUN NUMBER	1		2		3		AVERAGE	
	ENGLISH UNITS	METRIC UNITS	ENGLISH UNITS	METRIC UNITS	ENGLISH UNITS	METRIC UNITS	ENGLISH UNITS	METRIC UNIT
ANALYTICAL DATA								
A) Front Half								
Probe (mg)	--	2.3700	--	.7400	--	.5600	--	1.2233
Cyclone (mg)								
Filter (mg)								
Front Half Total (mg)								
grs/SDCF, (mg/m^3)								
#/hr, (kg/hr)								
B) ~~XXXXXXXXX~~ Imp. 1, 2, & 3								
Pb (mg)	--	.0070	--	.3200	--	.0060	--	.1110
grs/SDCF, (mg/m^3)								
#/hr, (kg/hr)								
Pb (mg) Imp. 4	--	.0010	--	.0050	--	.0010	--	.0023
grs/SDCF, (mg/m^3)								
#/hr, (kg/hr)								
C) Imp. 5 (mg)	--	.0010			--	.0020		
grs/SDCF, (mg/m^3)								
#/hr, (kg/hr)								
D) Total (mg)								
grs/SDCF, (mg/m^3)								
#/hr, (kg/hr)								
E) Total SO_2 (mg)								
ppm								
grs/SDCF, (mg/m^3)								
#/hr, (kg/hr)								

TABLE 42. LOCATION B.

RUN NUMBER	1		2		3		AVERAGE	
	ENGLISH UNITS	METRIC UNITS	ENGLISH UNITS	METRIC UNITS	ENGLISH UNITS	METRIC UNITS	ENGLISH UNITS	METRIC UNIT
ANALYTICAL DATA								
A) Front Half								
Probe (mg)	--	.0100	--	.0400				
Cyclone (mg)								
Filter (mg)								
Front Half Total (mg)								
grs/SDCF, (mg/m^3)								
#/hr, (kg/hr)								
B) ~~Boxxxxxxxx~~ Imp. 1, 2, & 3								
Pb (mg)	--	.0060	--	.0070	--	.0060	--	.0063
grs/SDCF, (mg/m^3)								
#/hr, (kg/hr)								
Pb (mg) Imp 4	--	.0010	--	.0020	--	.0010	--	.0013
grs/SDCF, (mg/m^3)								
#/hr, (kg/hr)								
C) Imp. 5 Pb (mg)	--	.0020	--	.0010	--	.0010	--	.0013
grs/SDCF, (mg/m^3)								
#/hr, (kg/hr)								
D) Total (mg)								
grs/SDCF, (mg/m^3)								
#/hr, (kg/hr)								
E) Total SO_2 (mg)								
ppm								
grs/SDCF, (mg/m^3)								
#/hr, (kg/hr)								

TABLE 43. WEST INLET

RUN NUMBER	1		2		3		AVERAGE	
	ENGLISH UNITS	METRIC UNITS	ENGLISH UNITS	METRIC UNITS	ENGLISH UNITS	METRIC UNITS	ENGLISH UNITS	METRIC UNIT
ANALYTICAL DATA								
A) Front Half								
Probe (mg)	--	3.4300	--	1.7400	--	.4600	--	1.8767
Cyclone (mg)								
Filter (mg)								
Front Half Total (mg)								
grs/SDCF, (mg/m^3)								
#/hr, (kg/hr)								
B) ~~Xxxxxxxxx~~ Back Filter								
Pb (mg)								
grs/SDCF, (mg/m^3)								
#/hr, (kg/hr)								
Pb (mg) Imp. 1, 2, & 3	--	.0060	--	.0120	--	.0060	--	.0080
grs/SDCF, (mg/m^3)								
#/hr, (kg/hr)								
C) Imp 4 (mg)	--	.0100	--	< .0010	--	< .0010		
grs/SDCF, (mg/m^3)								
#/hr, (kg/hr)								
D) ~~Xxxxx~~ Imp 5 (mg)	--	.0010	--	.0020	--	< .0010		
grs/SDCF, (mg/m^3)								
#/hr, (kg/hr)								
E) Total SO_2 (mg)								
ppm								
grs/SDCF, (mg/m^3)								
#/hr, (kg/hr)								

PROCESS SAMPLES:

Process samples recieved from Monsanto Research Corporation were in solution with HNO_3 and HF. The solutions were analyzed as recieved without modification except for dilution where necessary. No information was provided as to the digestion procedures used by Monsanto.

Details of the digestion method for all TRW collected samples are included in section 4 of this report.

TABLE 44

PROCESS SAMPLES

PLANT	PROCESS	DATE	%Pb
ASARCO			
	Dross Rev. Matte		0.257%
El Paso (Mons.)	Reverb Slag	6/26/77	0.160%
	"	"	0.210%
	"	6/28/77	0.133%
	Wedge Roaster Calcine	6/26/77	0.283%
	"	6/27/77	0.321%
	"	6/28/77	0.345%
	Conv. ?	6/28/77	0.554%
	R & R Spray	6/28/77	0.936%
	Zn Slag	6/22/77	0.555%
	Matte	6/21/77	0.216%
	"	6/22/77	0.342%
	"	6/23/77	0.388%
	"	6/24/77	0.879%
	"	6/26/77	0.242%
	"	6/27/77	0.886%
	"	6/28/77	0.796%
	Roaster Charge	6/21/77	0.220%
	"	6/24/77	0.473%
	"	6/26/78	0.427%
	"	6/27/77	0.215%
	"	6/21/77	0.373%
	Conv. Slag	6/22/77	1.21%
	"	6/23/77	0.621%
	"	6/24/77	0.576%
	"	6/28/77	0.413%
	Wedge Roaster Calcine	1/17/78	0.110%
ASARCO	"	1/18/78	0.264%
	"	1/19/78	0.213%
El Paso (TRW)	"	1/20/78	0.150%
	"	1/21/78	0.178%
	"	1/22/78	0.294%
	"	1/23/78	0.376%
	"	1/24/78	0.200%
	"	1/25/78	0.296%
	Raw Rev. Slag	1/17/78	0.180%
	"	1/18/78	0.330%
	"	1/19/78	0.277%
	"	1/22/78	0.164%
	"	1/23/78	0.210%
	"	1/24/78	0.119%
	"	1/25/78	0.397%
	H.F. Reverbs Slag	1/17/78	0.136%
	"	1/18/78	0.146%
	"	1/19/78	0.147%
	"	1/20/78	0.177%
	"	1/21/78	0.224%
	"	1/22/78	0.153%

Table 44 Cont.

PLANT	PROCESS	DATE	%Pb
ANACONDA Butte (Mons.)	Elec. Furn. Matte	4/20/77	0.308%
	"	4/21/77	0.590%
	Elec. Furn. Slag ladle	4/20/77	0.644%
	"	4/21/77	0.512%
	"	4/22/77	0.481%
	Reactor Feed	4/20/77	0.434%
	"	4/21/77	0.290%
	"	4/22/77	0.461%
	Baghouse Dust	4/22/77	0.662%
	"	4/22/77	2.14%
	"	4/23/77	2.86%
	"	4/25/77	1.14%
	"	4/26/77	0.768%
	Elect. Furn.	4/21/77	1.12%
	"	"	0.678%
	"	4/22/77	0.718%
	Conv. Slag	4/20/77	3.47%
PHELPS-DODGE Ajo	Acid Plant H_2SO_4	6/13/78	0.011 ppm
	"	6/14/78	0.013 ppm
	"	6/15/78	0.081 ppm
	Acid Plant Purge H_2O	6/13/78	27.5 ppm
	"	6/14/78	34.3 ppm
	"	6/15/78	14.5 ppm
	Converter Precip.	6/13/78	0.518%
	"	6/14/78	0.503%
	"	6/15/78	0.960%
	Anode Cu	6/14/78	0.0011%
	"	6/15/78	0.0021%
	"	6/16/78	0.0010%
	Converter Slag	6/13/78	0.0332%
	"	6/14/78	0.0519%
	"	6/15/78	0.0391%
	Matte	6/13/78	0.0414%
	"	6/14/78	0.0418%
	"	6/15/78	0.447%
PHELPS-DODGE Playas	Flash Furnace Feed	-------	0.140%
	Flash Furn. Slag	-------	0.052%
	Elec. Furn. Slag	-------	0.118%
	Flash Furn. Matte	-------	0.177%
	Elec. " "	-------	0.185%
	Conv. Blister	-------	0.093%
	Conv. Slag	-------	-------

Table 44 Cont

PLANT	PROCESS	DATE	%Pb
ASARCO Tacoma	Reverb Slag	9/19/78	0.423%
	"	9/20/78	0.270%
	"	9/21/78	0.378%
	Slag Pot #1	9/19/78	0.431%
	"	9/20/78	0.435%
	Slag Pot #2	9/20/78	0.187%
	"	9/21/78	0.266%
	Slag Pot #3	9/21/78	0.778%
	Slag Pot #3 (Top)	9/22/78	0.705%
	Slag Pot #3 (dump)	9/22/78	0.835%
	Slag Pot #4	9/22/78	0.479%
	Slag Pot #3 (bottom)	9/22/78	0.784%
	Slag Pot #4 (dump)	9/23/78	0.483%
	Mexican Arsenic	-------	0.020%
	Godfrey Calcine Charge	9/24/78	0.166%
	"	9/25/78	0.830%
	"	9/25/78	0.260%
	"	9/24/78	0.220%
	Roaster Charge	9/15/78	0.182%
	"	9/16/78	0.283%
	"	9/18/78	0.142%
	"	9/19/78	0.142%
	"	9/20/78	0.167%
	"	9/21/78	0.182%
	"	9/22/78	0.238%
	Conv. Slag	9/19/78	0.846%
	"	9/20/78	1.36%
	"	9/21/78	0.211%
	Roaster Calcine	9/15/78	0.180%
	"	9/16/78	0.108%
	"	9/18/78	0.231%
	"	9/19/78	0.368%
	"	9/20/78	0.201%
	"	9/21/78	0.279%
	"	9/22/78	0.069%
	#2 Reverb Matte	9/19/78	0.282%
	"	9/20/78	0.107%
	"	9/21/78	0.220%
	#1 Plate Treater	------	0.521%
	As Baghouse Dust	------	0.281%
	#1 Roaster Baghouse	------	0.213%
Charge 183	Blister Copper	5/14/78	0.056%
	Cu Slag from conv. #1 going into Conv. #2	"	6.62%
	Anode Slag #2 conv. from Anode Charge #158 to charge 183	"	5.02%

Table 44 Cont.

PLANT	PROCESS	DATE	%Pb
ASARCO			
Tacoma	Finish Cu Slag from	5/14/79	
	conv. #2		4.33%
	Conv. flux	"	0.77%
	Conv. Slag	"	6.50%
Charge 183	Roaster Charge	"	1.01%
	#2 conv. matte	"	1.32%
	cyclone dust #2 conv.	"	3.16%
	Roaster	"	1.02%
	Ballon Flue Dust	"	2.91%
	Crushed Reverts	"	5.18%
	Fine Metal From Cu slag from #1 conv. going into #2 conv.	"	1.29%
	metal from crushed reverts		2.31%
	#2 conv. cyclone dust	5/15/80	3.58%
	#2 Anode pies	"	0.069%
	Ballon Flue dust	"	2.93%
	Roaster Calcine	"	1.14%
	#2 conv. finish slag (Cu slag)	"	7.47%
Charge 185	Charge 184 Cu slag to conv. #2	"	4.35%
	Roaster feed 5/10/79		1.16.%
	Roaster feed 5/9/79	"	1.05%
	conv. slag	"	6.82%
	conv. flux	"	1.01%
	#2 Conv. Matte	"	3.14%
	Crushed reverts	5/16/79	6.33%
	Roaster Calcine	"	0.40%
	#2 conv. Slag	"	5.46%
	Roaster calcine	"	1.13%
	#2 Conv. Finish Slag out	"	4.69%
	#2 conv. crushed reverts	"	2.72%
	#2 conv. Flux	"	1.04%
Charge 190	#2 conv. Matte	"	1.71%
	#2 Conv. Finish Slag going into charge 190	"	7.74%
	#2 Conv. cyclone dust	"	3.90%
	Roaster charge	"	1.19%
	#2 Conv. anode slag	"	3.69%
	#2 Conv. ballon flue dust	"	2.76%

Table 44 Cont.

PLANT	PROCESS	DATE	%Pb
KENNICOTT Magma	Before Dryer	11/9/78 1st	0.101%
	"	11/14/78 2nd	0.084%
	"	11/14/78	0.079%
	After Dryer	11/9/78 1st	0.076%
	"	11/14/78	0.077%
		11/14/78 2nd	0.082%
	Conv. #1	11/6/78	0.229%
	"	11/7/78	0.808%
	"	11/8/78	0.585%
	Conv. #2	11/6/78	0.365%
	"	11/7/78	0.023%
	"	11/8/78	0.362%
	Furn. Matte #3	11/2/78	0.185%
	Furn. Slag #3	11/2/78	0.045%
	Furn. Matte	11/3/78	0.120%
	"	11/1/78	0.105%
	Furn. Slag	11/3/78	0.064%
	"	11/1/78	0.154%
	Furn. Conc. Feed	11/3/78	0.192%
	"	11/2/78	0.108%
	Finished Cu Anode	11/7/78	0.027%
	"	11/8/78	0.018%
	Cyclone Scrubber H_2O	11/9/78	4.4 ug/mℓ
	"	11/14/78 1st	28.3 ug/mℓ
	"	11/14/78 2nd	10.6 ug/mℓ

Lead Emission Factors:

$$\frac{(\text{Kg Pb/hr})\ (2.204\ \text{lbs/Kg}) = \text{lbs Pb/ton}}{(\text{ tons of roaster charge/hr})} = \text{lbs Pb/ton}$$

Data used in the calculation of emission factors is contained in table 45. The average and range of emission factors are summarized for operations without emission control devices in table 46, and for those with emission control devices in table 47.

TABLE 45
LEAD EMISSION
FACTORS INCULDED IN
CALCULATION OF TABLES 46 AND 47

Type of Operation	Plant	lbs Pb/ton charged	Sample location	Controlled	Uncontrolled
Roasting	Kennicott-Magma (1)	0.004	Concentrate drier		X
	Asarco-El Paso (2)	0.594	Calcine fugitive		X
		0.154	ESP outlet	X	
		0.880	Roasters		X
Smelting	Kennicott-Magma	0.026	Matte tapping		X
		0.002	Slag tapping		X
	Asarco-El Paso	3.036	Matte tapping		X
		4.136	South Reverb.		X
		0.726	North Reverb.		X
	Phelps-Dodge-Ajo (3)	0.134	Matte tapping		X
Converting	Kennicott-Magma	0.090	Acid Plant inlet	X	
		0.018	Converter, roll out		X
		0.015	Converter, full		X
	Asarco-El Paso	0.792	Baghouse inlet		X
		2.112	Acid Plant inlet	X	
		0.022	Acid Plant Outlet	X	
	Asarco-Tacoma (4)	0.220	Converter, rollout	X	
		0.154	Converter, full	X	
	Phelps-Dodge-Ajo	0.264	Converter, fugitive	.	X

(1) 60 tons/hour roaster charge rate
(2) 39 tons/hour roaster charge rate
(3) 23.5 tons/hour roaster charge rate
(4) 43.9 tons/hour roaster charge rate

TABLE 46
LEAD
EMISSION FACTORS FOR PRIMARY
COPPER SMELTERS WITHOUT CONTROLS

Type of Operation	Range				Average	
	Low		High			
	lb/ton	kg/MT	lb/ton	Kg/MT	lb/ton	Kg/MT
Roasting	0.004	0.002	0.880	0.440	0.492	0.246
Smelting	0.002	0.001	4.136	2.068	1.343	0.672
Converting	0.015	0.008	0.792	0.396	0.272	0.136
Refining (a)	-	-	-	-	-	-

(a) No data available

TABLE 47
LEAD
EMISSION FACTORS FOR PRIMARY
COPPER SMELTERS WITH CONTROLS

Type of Operation	Range				Average	
	Low		High			
	lb/ton	kg/MT	lb/ton	Kg/MT	lb/ton	kg/MT
Roasting (a)	-	-	-	-	0.154	0.077
Smelting (b)	-	-	-	-	-	-
Converting	0.022	0.011	2.112	1.056	0.520	0.260
Refining (b)	-	-	-	-	-	-

(a) Only one data point available
(b) No data available

SECTION 3

LOCATION OF SAMPLING POINTS

Asarco - El Paso, Texas; TRW test program

1) Inlet to the Converter Building Fugitive Emissions Baghouse

   Samples from the inlet to the converter building fugitive baghouse were taken from a 152" diameter horizontal duct which is 50 feet above the ground. Sampling ports on the top and side of the duct allowed for vertical and horizontal traverses of the duct during sampling. The nearest upstream flow disturbance was a bend 90 feet (7 diameters) away from the sampling point. The nearest downstream disturbance was a bend 100 feet (8 diameters) downstream. Forty traverse points were chosen so that the sampling period would coincide with that at the outlet from the baghouse. Figure 1 is a diagram of the sampling location.

2) Outlet from the Converter Building Fugitive Emissions Baghouse

   Samples from the outlet of the converter building fugitive baghouse were taken from a 20' by 9' rectangular duct. The duct was horizontal and the sampling point was 35 feet above the ground. The nearest upstream flow disturbance was 45 feet (3.5 equivalent diameters) away. The nearest downstream disturbance was 12.5 feet (1 equivalent duct diameter) away. Ten traverse points were selected at each of the four sampling ports. Figure 2 is a diagram of this location.

3) Roaster Calcining Fugitive Emissions Duct

   The roaster calcining fugitive emissions were sampled from a 28.5 inch diameter circular duct which was 15 feet above the ground and at a 10 degree angle to the horizontal. The nearest upstream flow disturbance was 75 feet away (32 diameters); the nearest downstream disturbance was 8 feet away (3.5 diameters). Twenty traverse points were selected for sampling, ten on each of the two traverses. Figure 3 is a diagram of this sampling location.

4) Outlet from the Roaster/Reverberatory Furnace Electrostatic Precipitator

   The duct exiting the roaster/reverberatory furnace electrostatic precipitator is a ballon shaped duct twenty-two feet high and twelve feet wide at the top. The nearest upstream disturbance was 50 feet (4 diameters) away; the nearest downstream disturbance was 20 feet (1.5 diameters)

away. Sampling was done at 50 traverse points. Figure 4 is the plan view diagram of this sampling location. Figure 5 illustrates the cross-sectioned view.

5) Matte Tapping Reverbatory Furnace Outlet

The fugitive emissions from the matte tapping reverbatory furnace were sampled from a 32.75" diameter horizontal round duct. The nearest upstream disturbance was 20 feet (6 diameters) away; the nearest downstream disturbance was 12 feet (4 diameters) away. Sampling was done at 24 traverse points on two traverses. Figure 6 is a diagram of this sampling location.

TRAVERSE POINT LOCATIONS

Traverse Point Locations	Fraction of Stack I.D.	Distance From Inside Wall (in)
1	0.026	4.0
2	0.082	12.5
3	0.146	22.2
4	0.226	34.4
5	0.342	52.0
6	0.658	100.0
7	0.774	117.6
8	0.854	129.8
9	0.918	139.5
10	0.974	148.0

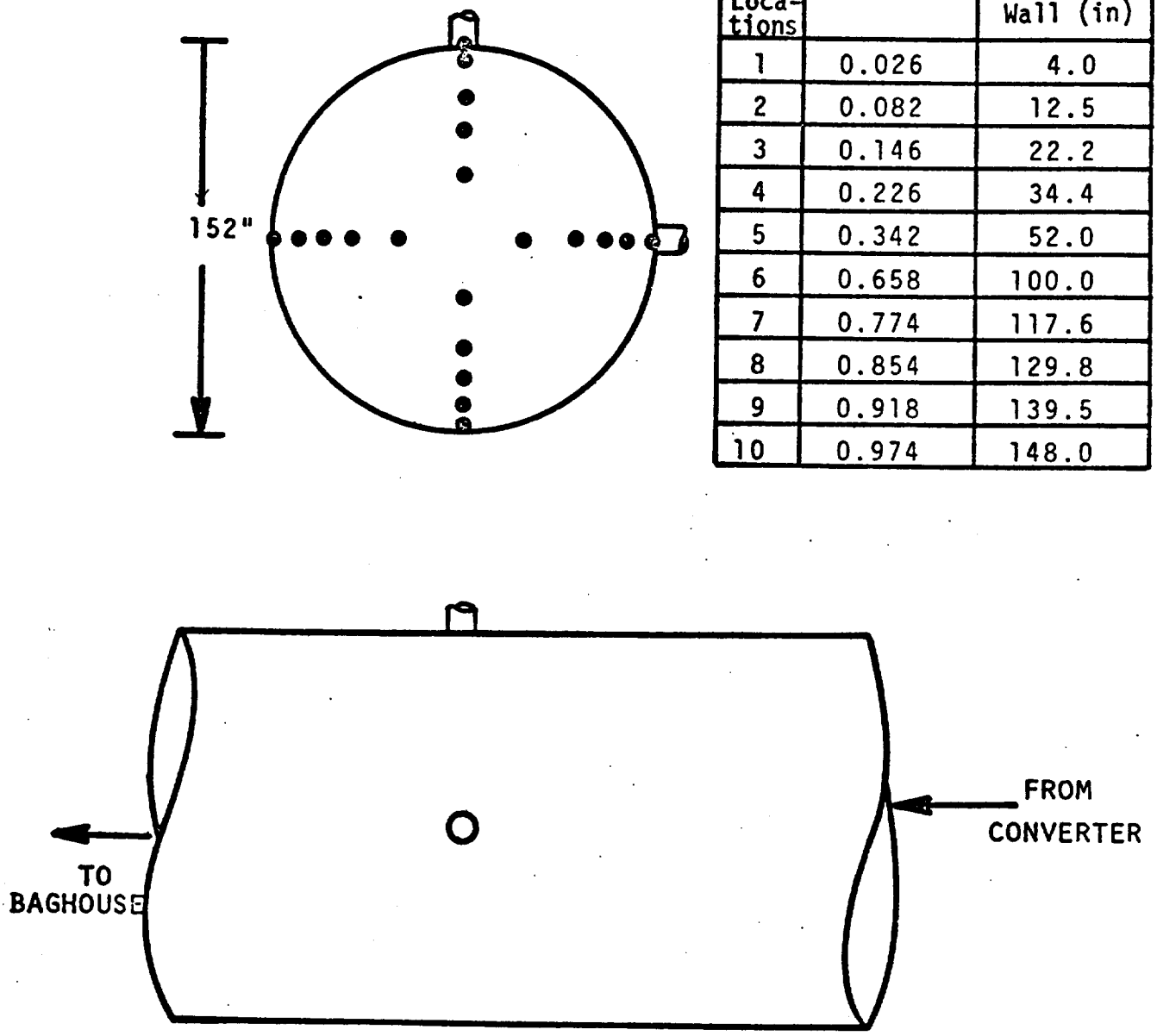

FIGURE 1.
INLET TO CONVERTER FUGITIVE EMISSIONS BAGHOUSE

DISTANCE OF SAMPLING POINT FROM PORT

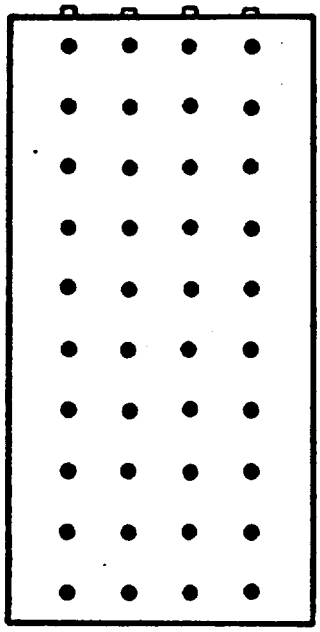

CROSS SECTION

TRAVERSE POINT	DISTANCE FROM INSIDE WALL (IN)
1	12
2	36
3	60
4	84
5	108
6	132
7	156
8	180
9	204
10	228

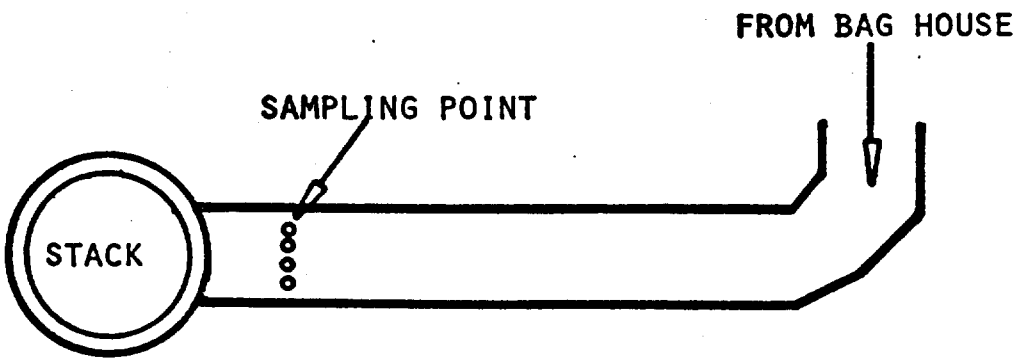

PLAN VIEW

FIGURE 2. OUTLET FROM CONVERTER BUILDING FUGITIVE EMISSIONS BAGHOUSE

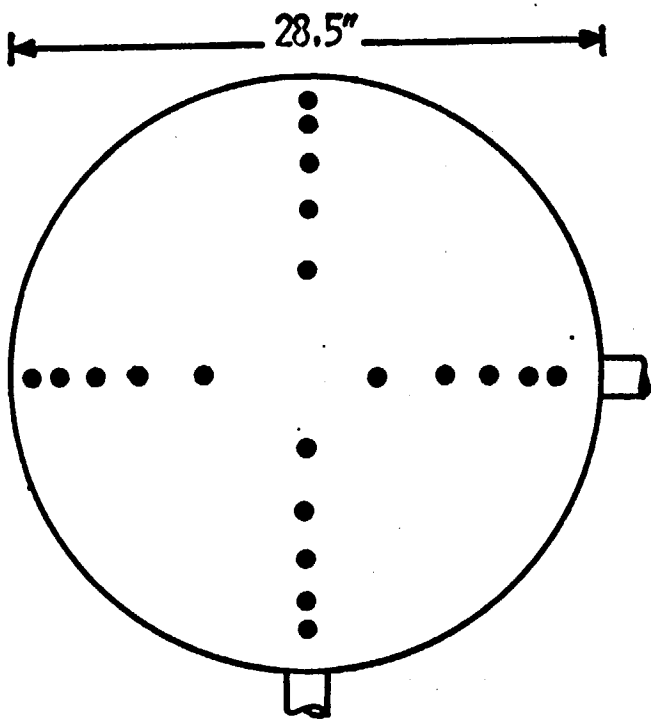

TRAVERSE POINT LOCATION

TRAVERSE POINT NUMBERS	FRACTION OF STACK I.D.	DISTANCE FROM INSIDE WALL (IN)
1	0.026	1.0
2	0.082	2.25
3	0.146	4.25
4	0.226	6.5
5	0.342	9.75
6	0.658	-18.75
7	0.774	22.0
8	0.854	24.25
9	0.918	26.25
10	0.974	27.75

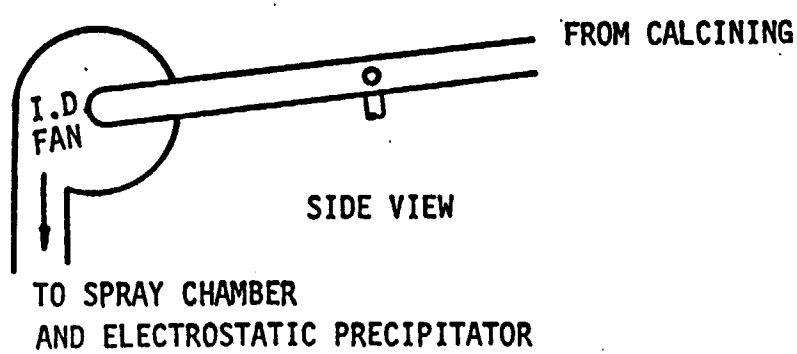

FIGURE 3. ROASTER CALCINING FUGITIVE EMISSIONS DUCT

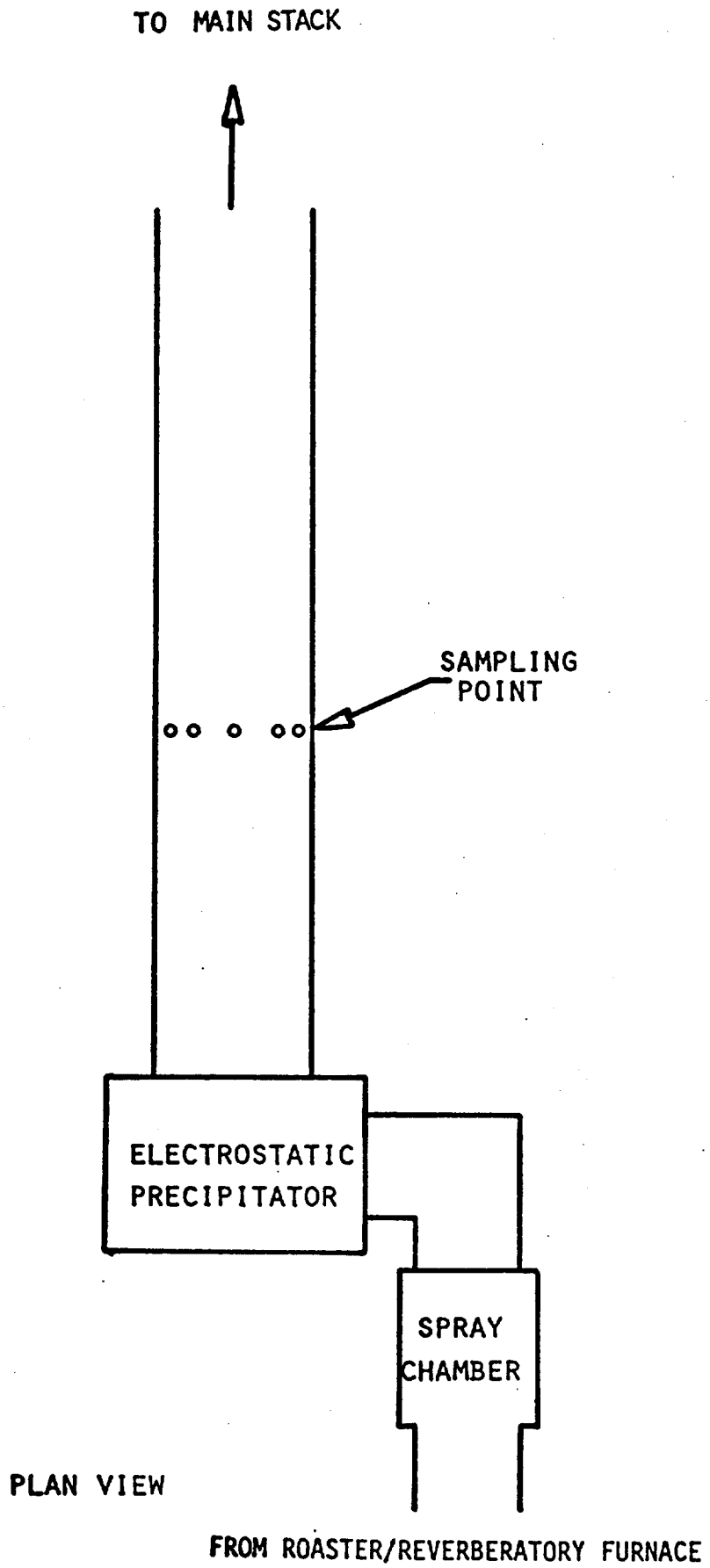

FIGURE 4. OUTLET FROM THE ROASTER/REVERBERATORY FURNACE ESP

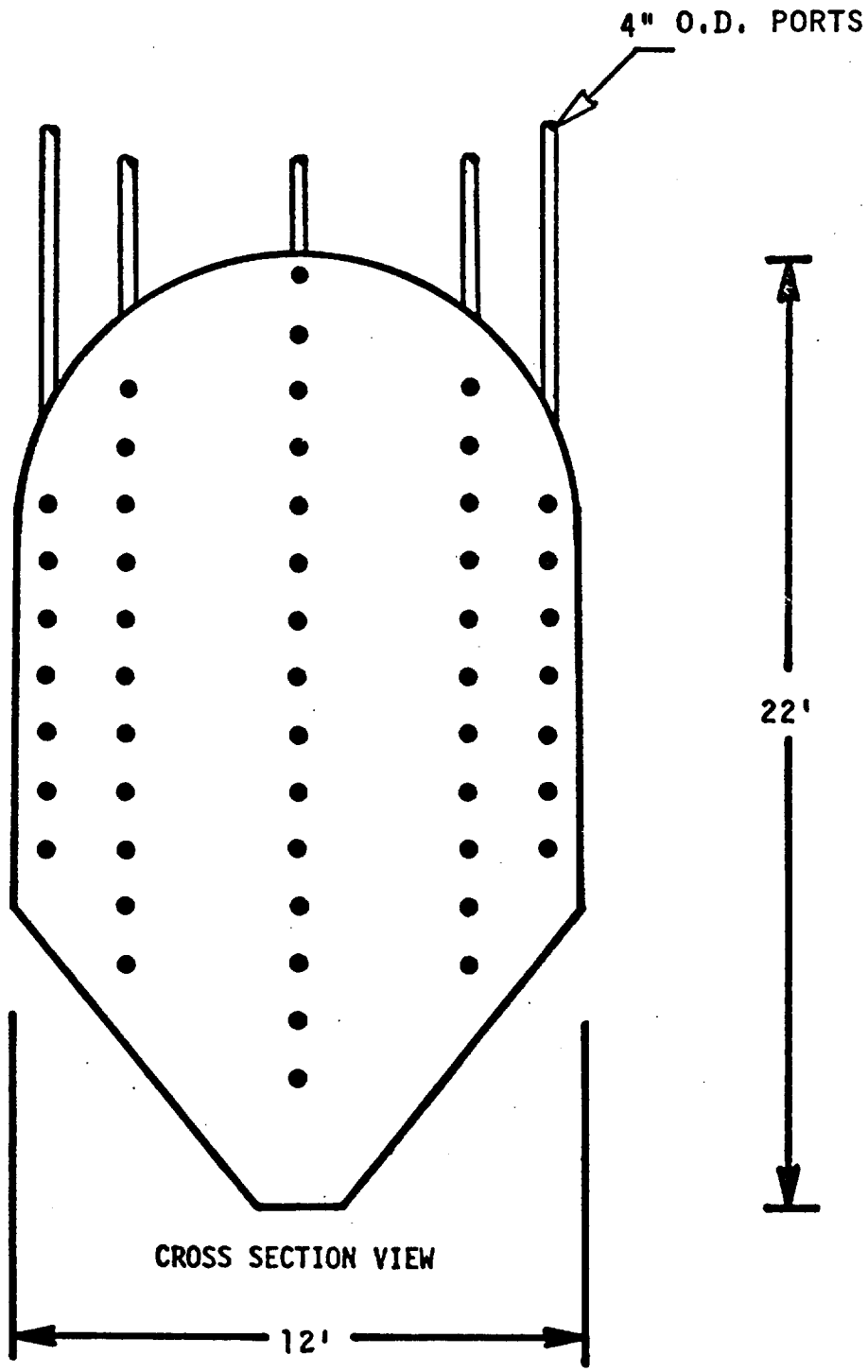

FIGURE 5.

OUTLET FROM ROASTER REVERB SPRAY CHAMBER
AND ELECTROSTATIC PRECIPITATOR

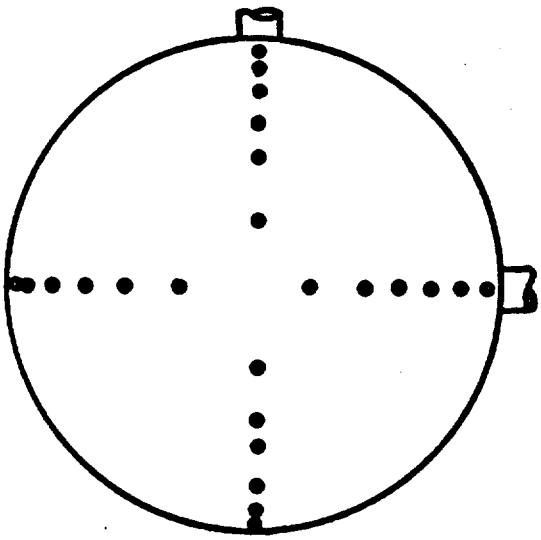

TRAVERSE POINT LOCATIONS

Traverse Point #	Fraction of Duct I.D.	Distance From Inside Wall
1	0.021	1.0
2	0.067	1.8
3	0.118	3.1
4	0.177	4.7
5	0.250	6.6
6	0.356	9.4
7	0.644	17.1
8	0.750	19.9
9	0.823	21.8
10	0.882	23.4
11	0.933	24.7
12	0.979	25.5

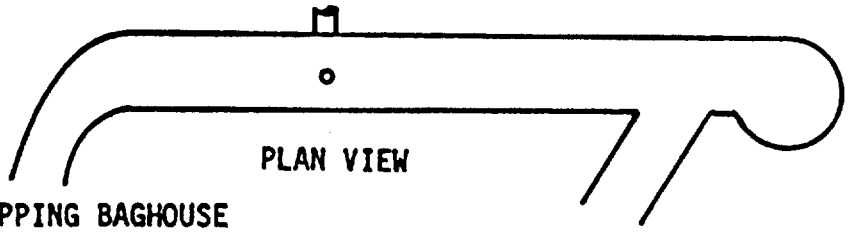

FIGURE 6. MATTE TAPPING REVERBERATORY FURNACE OUTLET

Asarco - El Paso, Texas; Monsanto test program

There are two distinct control systems in the copper smelting facility. The first controls the effluent from the convertor line, and the second controls the effluent from the multi-hearth roasters and the reverberatory furnace. The effluent of the converter line passes through an induced draft fan, a spray chamber, an electrostatic precipitator, and finally through a sulfuric acid plant. The gases from the multi-hearth roasters are joined by the gases from the reverberatory furnace, pass through a spray chamber, are then cleaned in an electrostatic precipitator, and then are directed to the base of the main stack where they are emitted to the atmosphere. The first system we will discuss is the effluent of the convertor line.

EFFLUENT OF THE CONVERTER LINE

Point D Effluent of Converters

Gases are collected from the converters in a system of duct work and directed out of the building, in two ducts, to the plenum chamber inlet of an induced draft (I.D.) fan. The outlet of this fan is sampling point D. The gases leave the fan through a transition duct and into an expansion joint approximately 4-foot (1.22 m) long. The gas then passes through a horizontal duct that is 75 inches (190.5 cm) inside diameter and 16 ft. (4.88 m) long and into the inlet of the spray chamber. This section of line, including the expansion joint, constituted a 20 foot (6.10 m) straight length of duct work and was selected as site D, inlet to the convertor line control device.

Two 4 inch (10.2 cm) diameter pipe ports were located 4 foot (1.22 m) from the spray chamber and 16 ft. (4.88 m) from the outlet of the fan, giving 0.64 diameters downstream and 2.56 diameters upstream from the ports. The ports were located on the top and side of the horizontal duct 90° apart. A 44 point total traverse was required, however, the first and last points on each 22 point traverse were less than 1 inch (2.54 cm) from the duct wall. A 48 point total traverse was used and the first and last points were dropped from each 24 point single traverse.

It was discovered on the initial velocity traverse that the bottom of the duct had an accumulation of material in it. Only the first 13 points of the vertical traverse were used to sample the duct. All 22 points of the horizontal traverse were used. A sketch of this location is shown in Figure 7.

Point E

Sampling point E is the outlet of the sulfuric acid plant. It is a vertical stack with an atmospheric outlet. There is a straight section of stack from the last disturbance (a tee section) to the outlet of about 35 to 40 ft. (10.67 to 12.19 m) and the inside diameter of the stack is 66 inches (167.6 cm). The ports were located approximately 12 feet (3.66 m) from the disturbance to the ports and 4 or 5 diameters from the ports to the

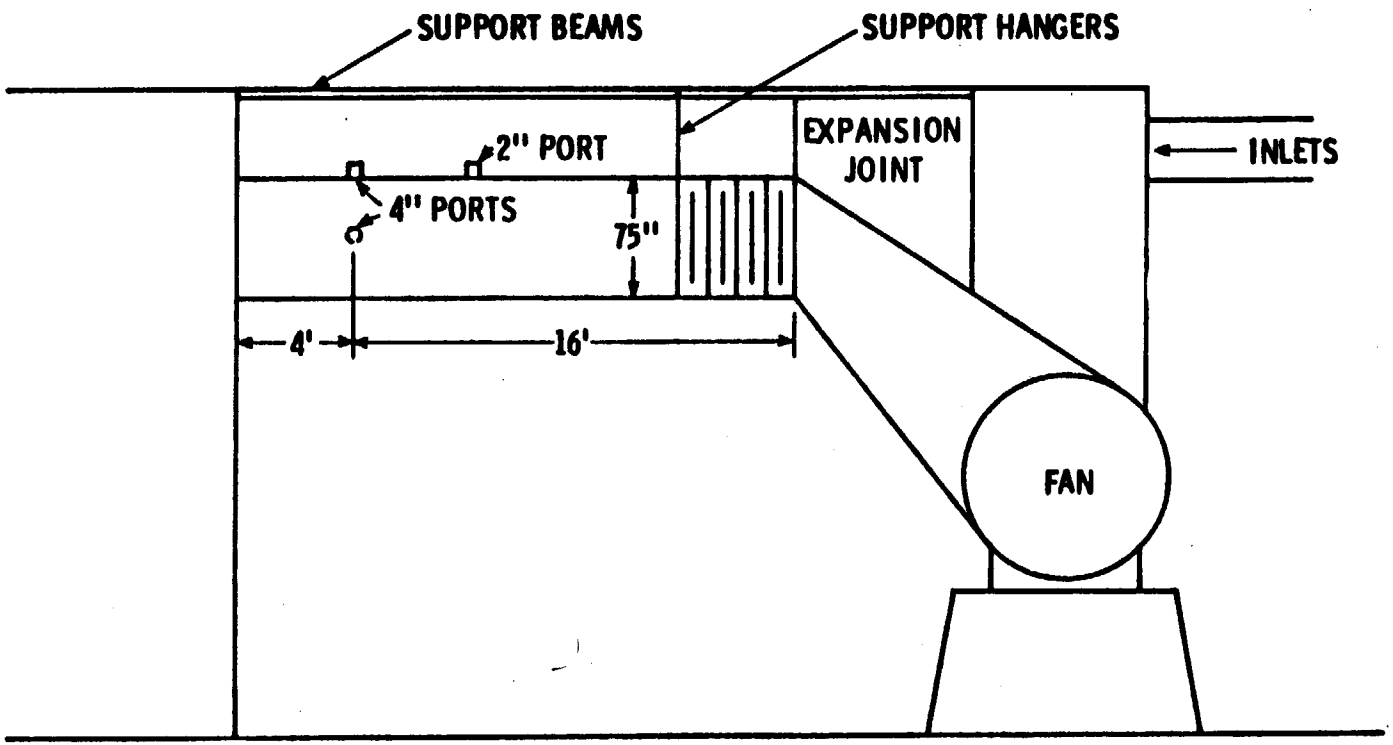

Figure 7. Sampling location D

outlet. The ports were 4 inch (10.16 cm) flanged pipe and were located 90° from each other on the circumference of the stack. A 48 point total traverse was laid out, however, the first and last points of each single traverse were nearer than 1 inch (2.54 cm) from the stack wall and were not used. A 44 point total traverse was used.

EFFLUENT OF THE ROASTER AND REVERBERATORY FURNACES

Point C - Effluent of the Roasters

Sampling point C is the effluent of the multi-hearth roasters. The outlets of the roasters are accumulated in a system of duct work and directed to a large rectangular downtake flue at the top of the roaster building. This downtake, constructed of brick, runs diagonally down the side of the roaster building at approximately a 45° angle and joins the horizontal flue that takes the gases to the cleaning system. This downtake is sampling point C. Four 4 inch (10.16 cm) pipe sampling ports were installed in a horizontal line across the downtake at the second level of the building on both the inside and outside of the duct and scaffolding was erected on the outside for access. Since the duct was approximately 14.5 feet (4.42 m) square inside, the ports were in the range of 2.21 to 2.75 equivalent diameters from the nearest upstream disturbance and 0.55 to 2.07 equivalent diameters from the nearest downstream disturbance. A 40 point total traverse was laid out to sample this duct. This would have consisted of 5 traverse points per port. The ports on both the inside and outside of the duct nearest the bottom was found to be under an accumulation of dust and therefore were not sampled. This left a 30 point traverse. A sketch of this location is shown in Figure 8.

Point B - Effluent of the Reverberatory Furnaces

The gases leaving the reverberatory furnace first pass through a waste heat recovery boiler and then through two I.D. fans. The outlet of these fans are sampling point B. The two rectangular ducts from the fans, designated South (SB) and North (NB), are 26 feet (7.92 m) long, 8 feet (2.44 m) tall and 6 feet (1.83 m) wide giving an equivalent diameter of 6.857 feet (2.09 m). The ducts are about 12 feet (3.66 m) apart and both empty into the long horizontal flue that already contains the gases from the roaster process. Six 4 inch (10.16 cm) pipe ports were located on each of the ducts on the 8 foot (2.44 m) wall facing each other and were offset 1 foot (.30 m) from each other along the length to facilitate probe handling during simultaneous sampling. The South duct ports were located 15.5 ft. (4.72 m) from the fan outlet and 10.5 ft. (3.20 m) from the flue giving 2.26 diameters upstream and 1.53 diameters downstream of unobstructed duct. The North duct ports were located 14.5 ft. (4.42 m) from the fan and 11.5 ft. (3.51 m) from the flue giving 2.11 diameters upstream and 1.68 diameters downstream of unobstructed duct. Each port was sampled using 4 traverse point locations so that a 24 point overall traverse was obtained on each duct. A sketch of this location is shown in Figure 9.

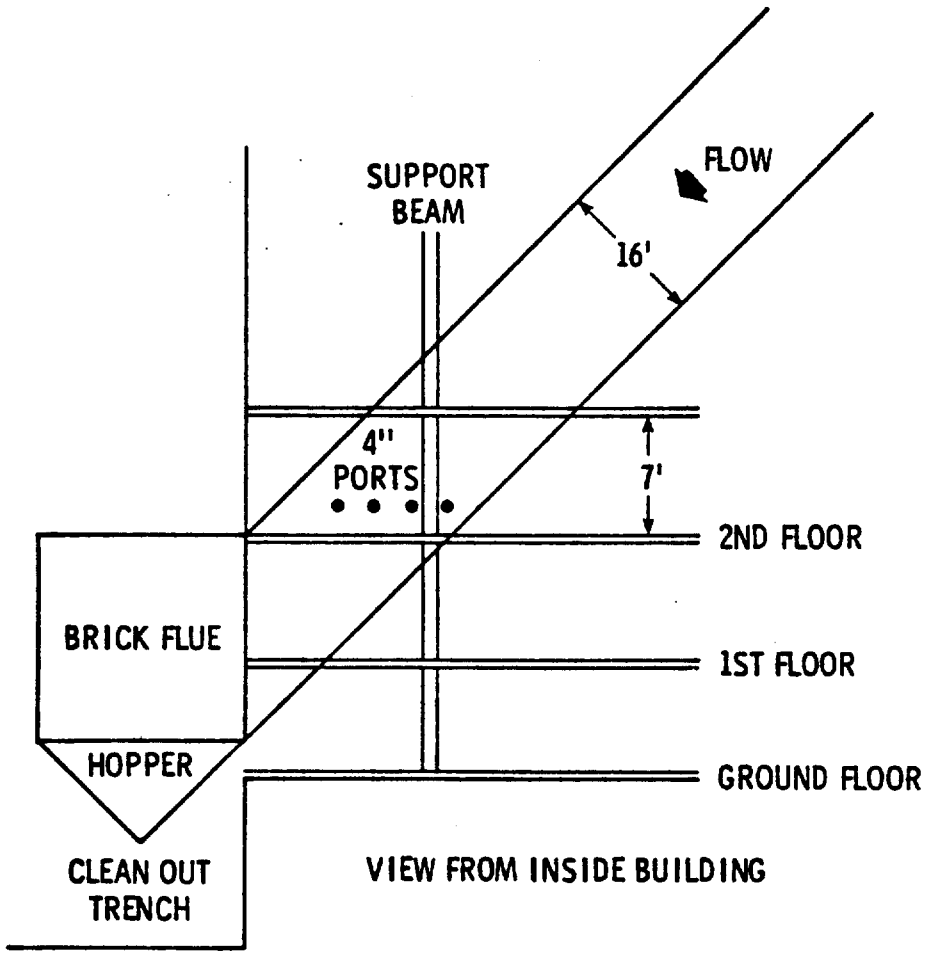

Figure 8. Sampling location C

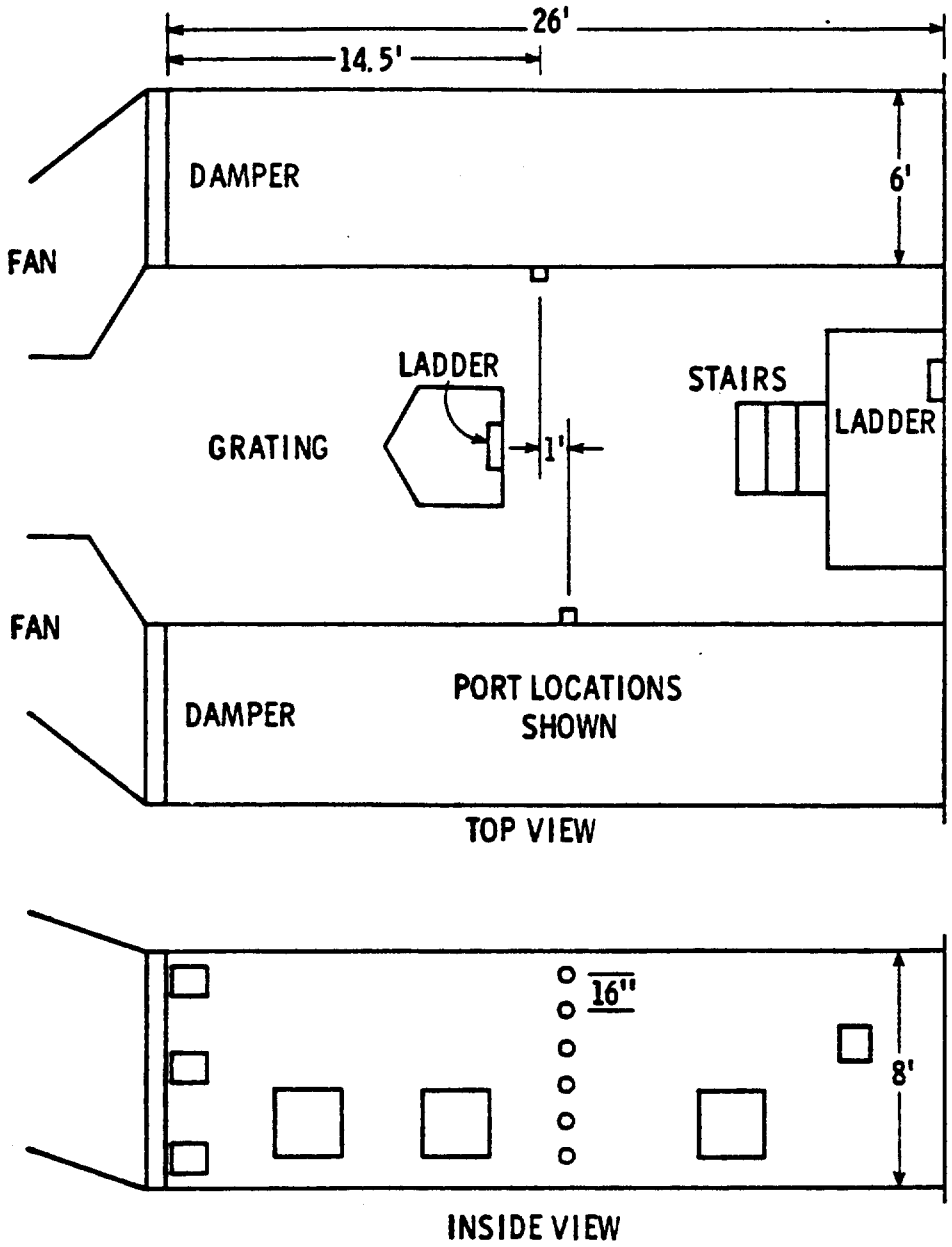

Figure 9. Sampling location B

POINT A - OUTLET OF THE ESP

Sampling point A is a large balloon flue that connects the ESP to the base of the main stack. The flue exits the ESP building and turns right about 30°. It then runs for a straight length of about 68 ft. (20.73 m) where another bend occurs. From this point it continues to the main stack. The sampling points are located approximately 48 ft. (14.63 m) from the first bend and approximately 20 ft. from the second.

There are no guidelines for calculating an equivalent diameter for a balloon shaped flue. The cross section of the flue has a semicircular top of 6 ft. (1.83 m) radius, below this is a rectangular section 12 ft. (3.66 m) wide by 7.66 ft. (2.33 m) tall, and the bottom is a V shaped triangle with a 12 ft. (3.66 m) top and a depth of about 9 ft. (2.74 m). This gives a total area of approximately 200 ft^2 (18.58 m^2). An equivalent circular duct would have a diameter of about 16 ft. (4.88 m). Using 16 ft. (4.88 m) as an equivalent diameter the ports are located 3 diameters from the nearest upstream bend and 1.25 diameters from the nearest downstream bend. This would normally require about 40 points to traverse. Five 3 inch (7.62 cm) ports were located on the top of the duct and were located on the top of the top of the duct and were designated A through E across the duct. Due to the shape of the duct, various numbers of points were used on each port.

Ports A and E were sampled using 7 points each, ports B and D with 11 points each and port C with 15 points. This gave a total traverse of 51 points. At each of the topmost points of each port traverse, no flow was detected so the second point of each traverse was sampled twice as long. This left a 46 point total traverse with the 5 uppermost points being sampled at double the time of the others. A sketch of this location is shown in Figure 10.

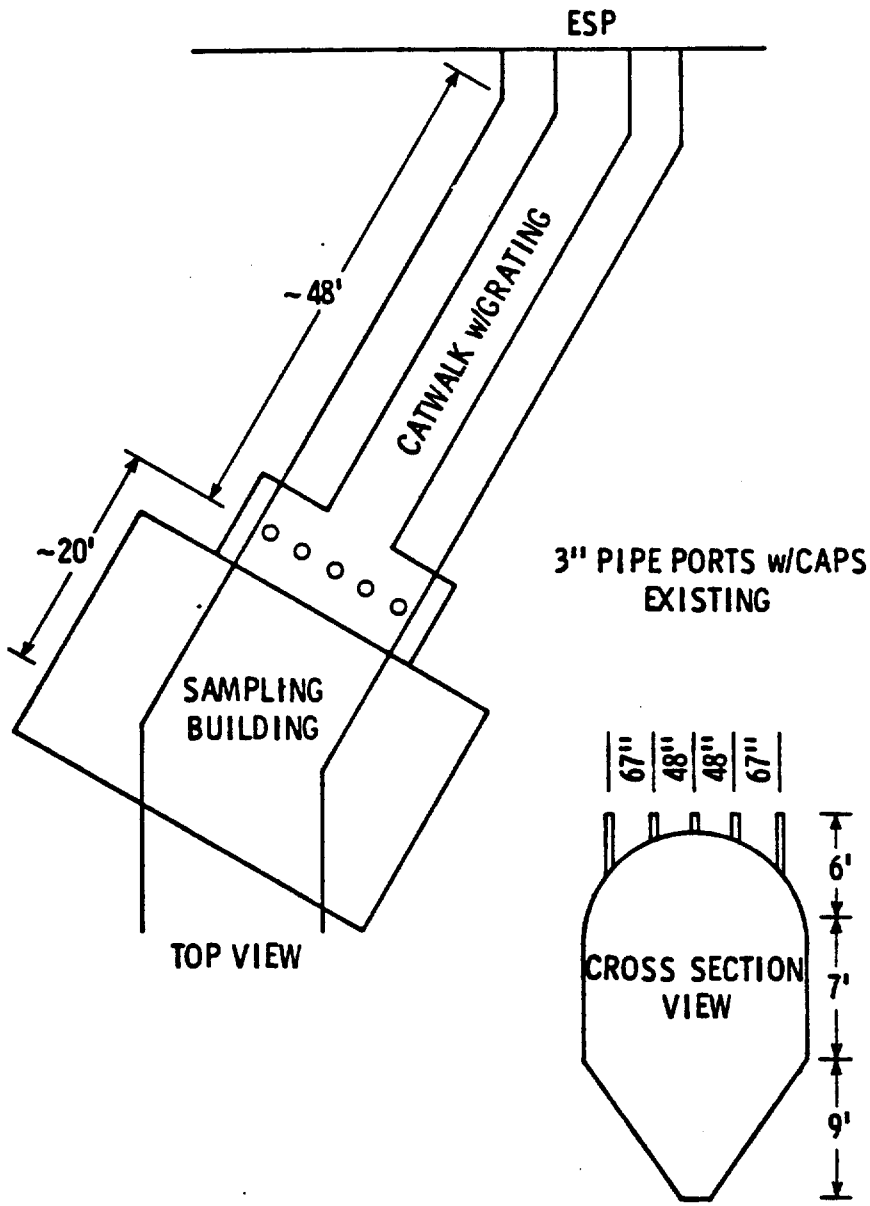

Figure 10. Sampling point A

Phelps-Dodge - Douglas, Arizona; TRW test program

Inlet to Calcine/Roaster Baghouse

Samples from the inlet to the calcine/roaster baghouse were taken from a 43" horizontal duct located approximately 25 feet above the ground. Sampling ports on the bottom and side allowed for vertical and horizontal traverses. The nearest upstream disturbance was 24 feet (8 diameters) away from the sampling point. The nearest downstream disturbance was the intake to the baghouse located 7 feet (2 diameters) away from the sampling point. Twelve traverse points were selected for particulate and arsenic/sulfur dioxide tests. Figure 11 is a schematic of the sampling location.

Outlet from Calcine/Roaster Baghouse

Samples from the outlet of the calcine/roaster baghouse were taken from a 42" horizontal duct located approximately 35 feet above the ground. Sampling ports on the bottom and side allowed for vertical and horizontal traverses. The nearest upstream disturbance was 42 feet (12 duct diameters) away from the sampling point. The nearest downstream disturbance was a 90° bend located 28 feet (8 duct diameters) from the sampling point. Twelve traverse points were utilized for particulate and arsenic/sulfur dioxide tests. Figure 12 is a schematic of the sampling location.

Traverse point locations	Fraction of stack I.D.	Distance from inside wall (in)
1	.044	1.87
2	.146	6.30
3	.296	12.72
4	.704	30.28
5	.854	36.70
6	.956	41.13

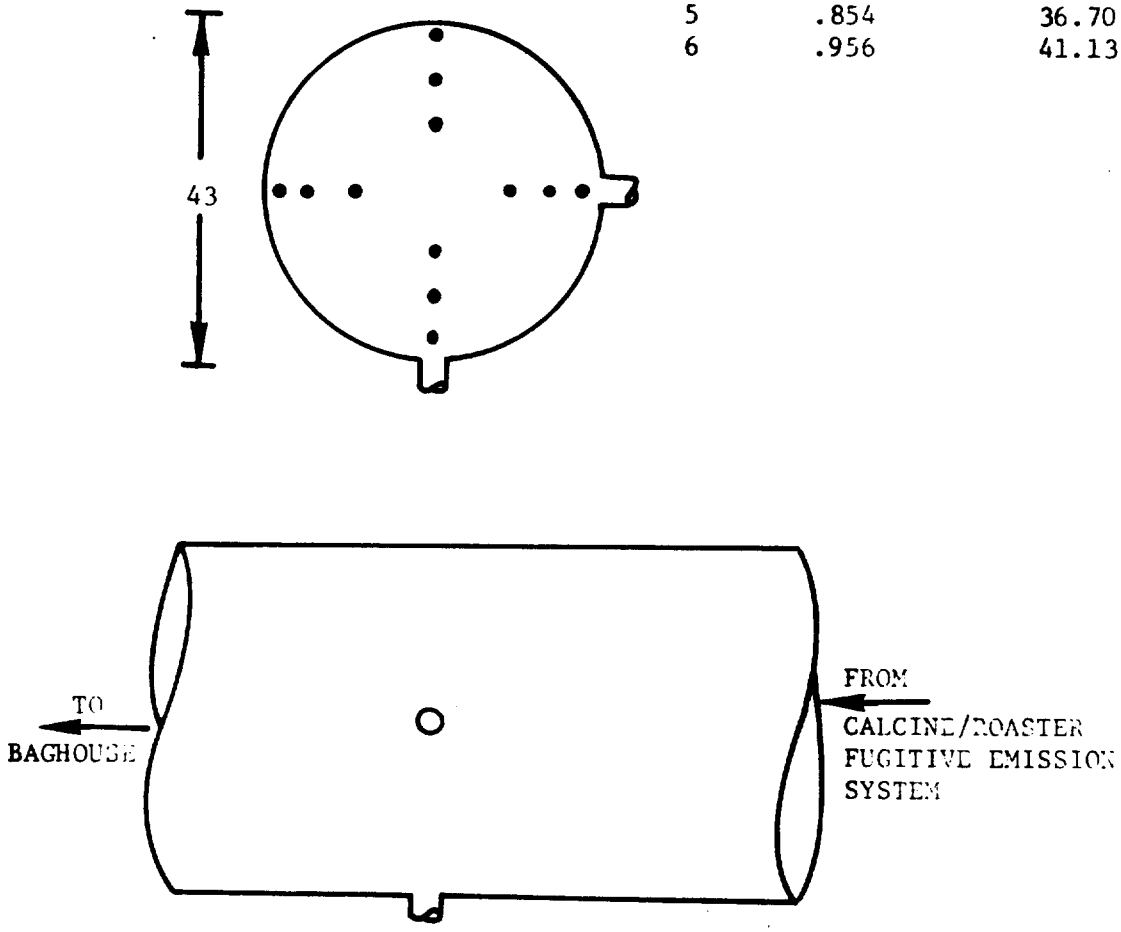

Figure 11. Inlet to calcine/roaster baghouse.

TRAVERSE POINT LOCATIONS

Traverse point locations	Fraction of stack I.D.	Distance from inside wall (in)
1	.044	1.83
2	.146	6.15
3	.296	12.43
4	.704	29.57
5	.854	35.85
6	.956	40.17

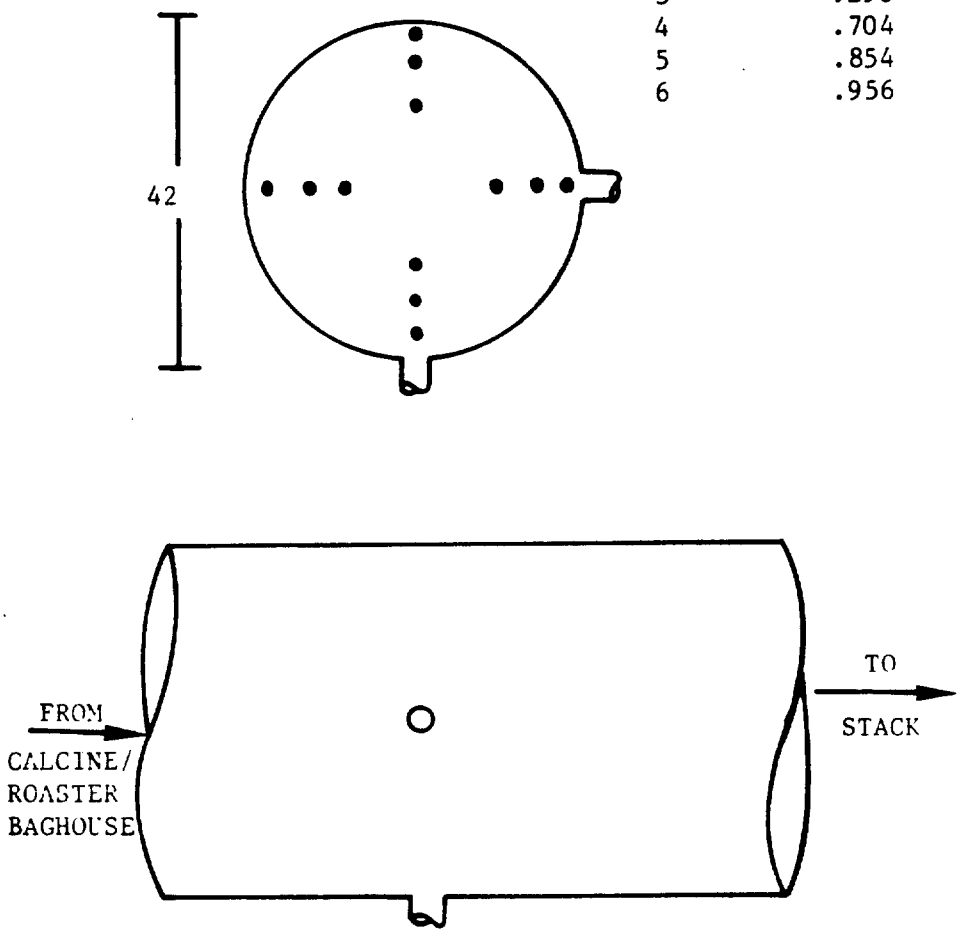

Figure 12. Outlet from calcine/roaster baghouse.

Phelps-Dodge - Ajo, Arizona; TRW test program

Converter Fugitive Emission Duct

Samples from the converter fugitive emission duct were taken through a 64" horizontal duct located approximately 75 feet above the ground. The sampling ports on the top and side of duct allowed for vertical and horizontal traverses during sampling. The nearest upstream flow disturbance was a bend 43 feet (8 duct diameters) away from the sampling point. The nearest downstream disturbance was a bend 11 feet (2 duct diameters) away. Twelve traverse points were selected, six on each traverse. Figures 13 and 14 are schematics of the sampling location.

Matte Tapping Fugitive Emission Duct

Matte tapping fugitive emissions were sampled through a 73" fiberglass horizontal duct located approximately 25 feet above the ground. Sampling ports located on the side and bottom allowed for horizontal and vertical sampling. The nearest upstream disturbance flow is located 48 feet (8 duct diameters) away from the sampling position. Twelve traverse points were utilized for sampling: six on each of two traverses. Figures 15 and 16 are schematics of this sampling location.

Inlet to ESP

Sampling was performed through a vertical rectangular duct which measured 94" x 85". The sampling position was located approximately 80 feet above the ground. Sampling ports consisted of six ports evenly distributed across the west side of the duct. Sampling ports enabled TRW personnel to sample with horizontal traverses. The nearest upstream disturbance was located 10 feet (1 1/2 duct diameters) from the sampling position. The flow disturbance occurs where the rectangular duct attaches to the circular duct at a 90° angle to the flow of gases. The nearest downstream disturbance is located 7 feet (1 duct diameter) from the sampling points where the gases enter the acid plant. Forty-eight sampling points were utilized with eight points on each of six traverses. Figure 17 is a schematic of the sampling location.

Acid Plant Outlet

Samples were taken from a 54" horizontal duct which was located approximately 70 feet above the ground. The sampling ports were located on the side and top enabling horizontal and vertical traverses. The nearest upstream disturbance was located greater than 36 feet (8 duct diameters) from the sampling points. Figure 18 is a schematic of the sampling location.

ESP Outlet/Acid Plant Inlet

Sampling was performed through a horizontal circular duct that was located approximately 25 feet above the ground. Sampling ports were positioned on the bottom and side of the duct to allow vertical and

Traverse point locations	Fraction of stack I.D.	Distance from inside wall (in)
1	.044	2.79
2	.146	9.37
3	.296	18.97
4	.704	45.06
5	.854	54.63
6	.956	61.21

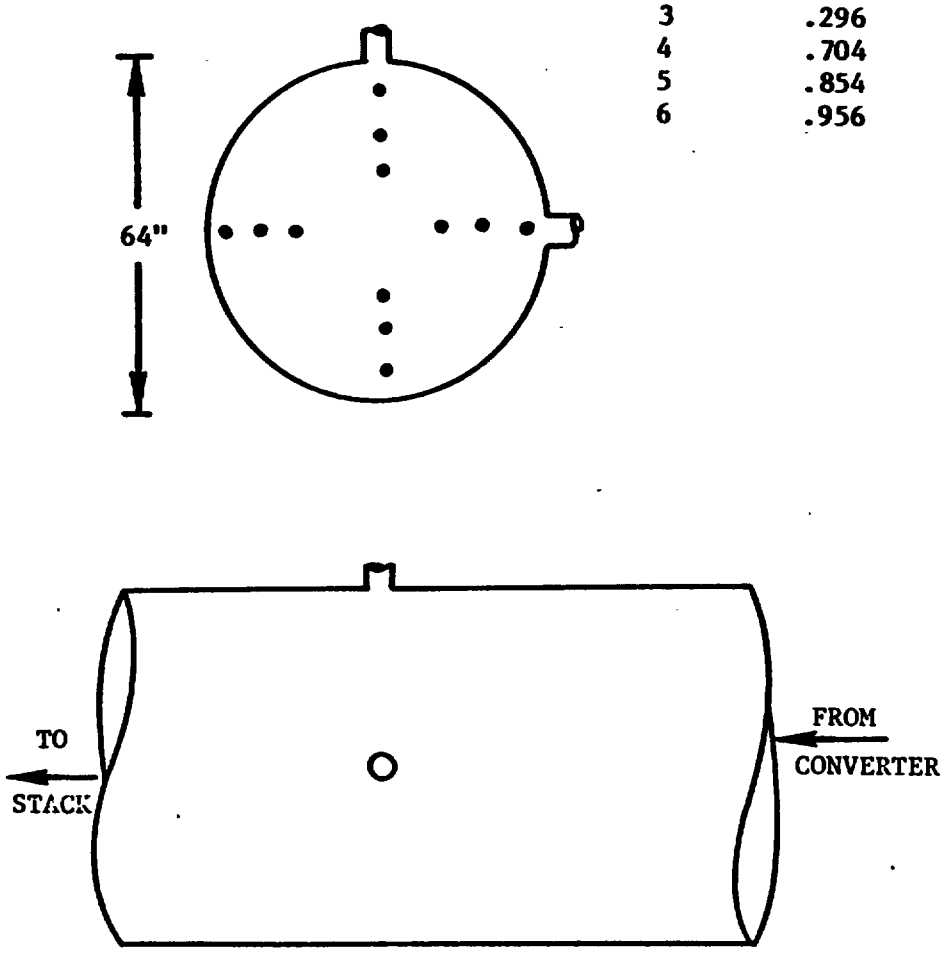

Figure 13. Converter fugitive emission duct.

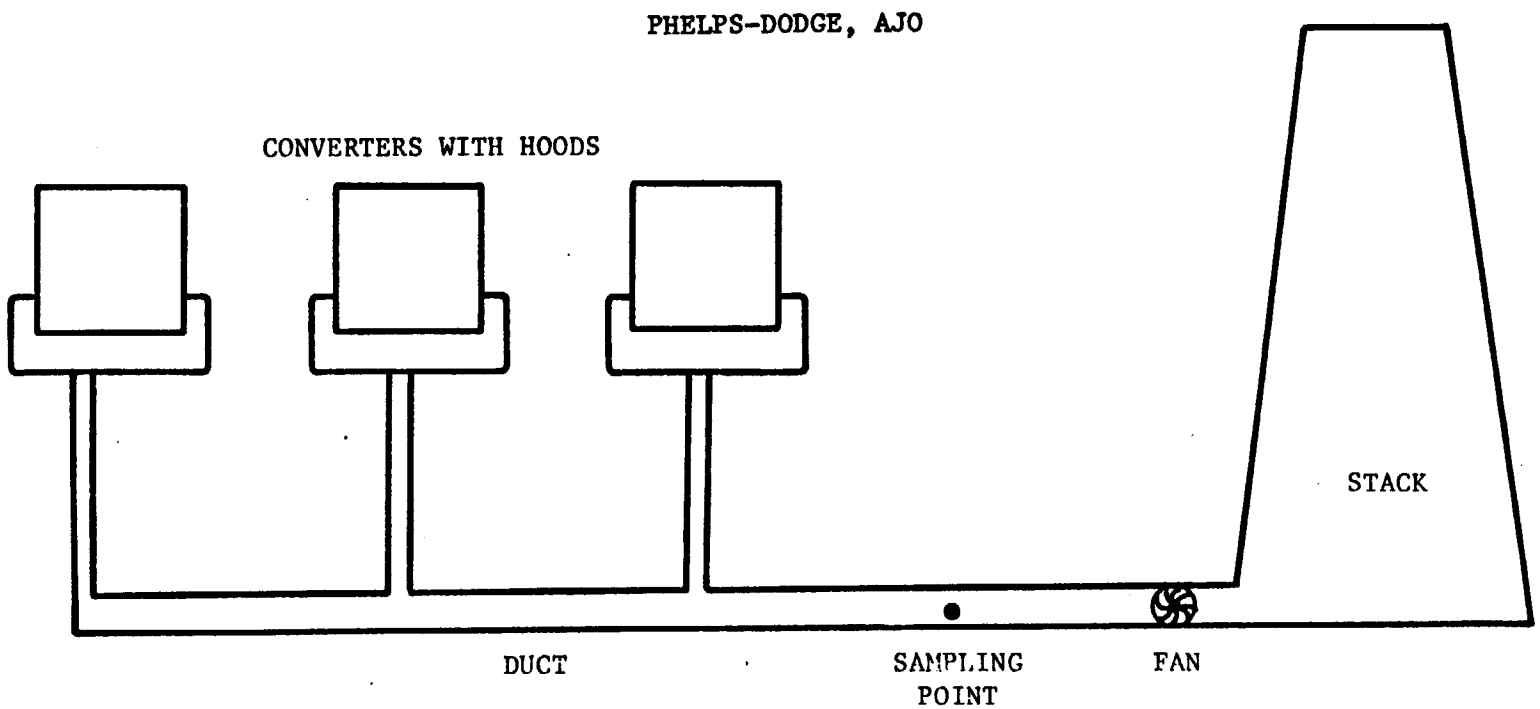

Figure 14. Converter fugitive emission system

Traverse point locations	Fraction of stack I.D.	Distance from inside wall (in)
1	.044	3.18
2	.146	10.69
3	.296	21.60
4	.704	51.40
5	.854	62.31
6	.956	69.82

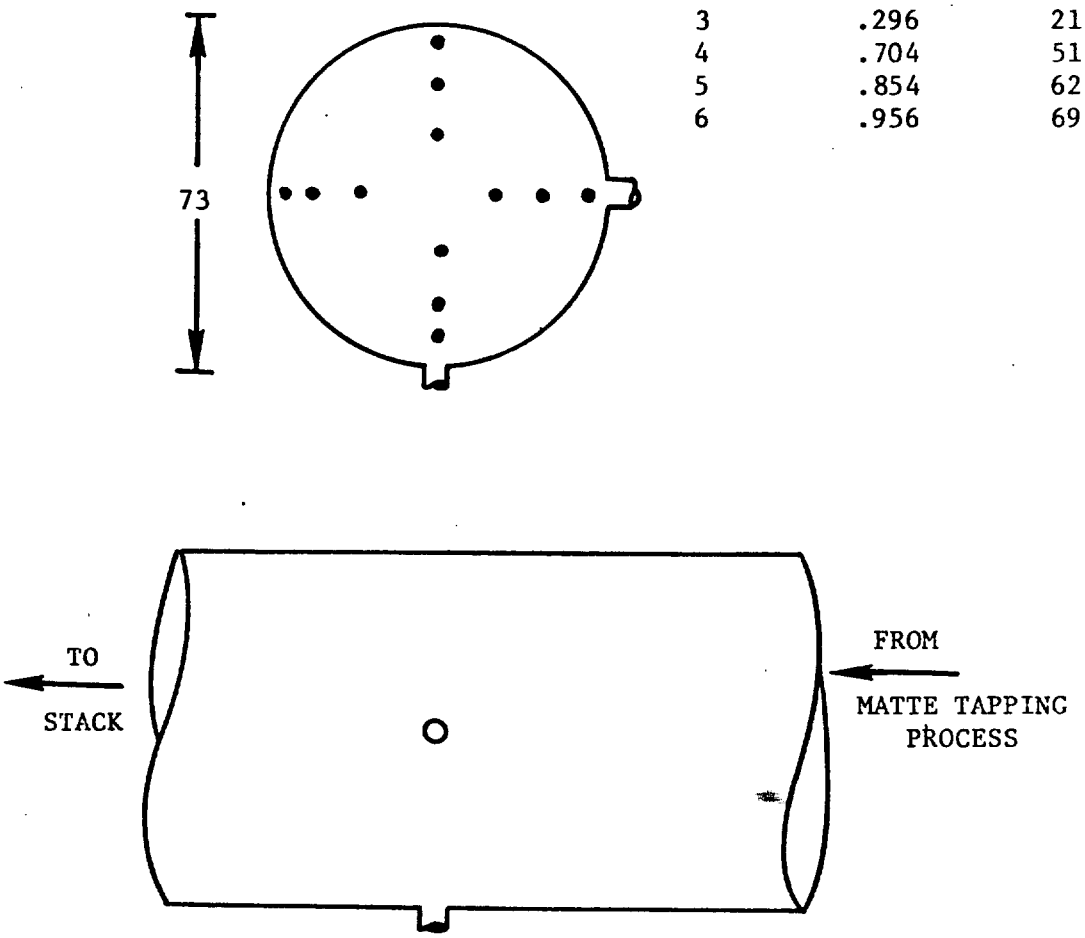

Figure 15. Matte tapping emission duct

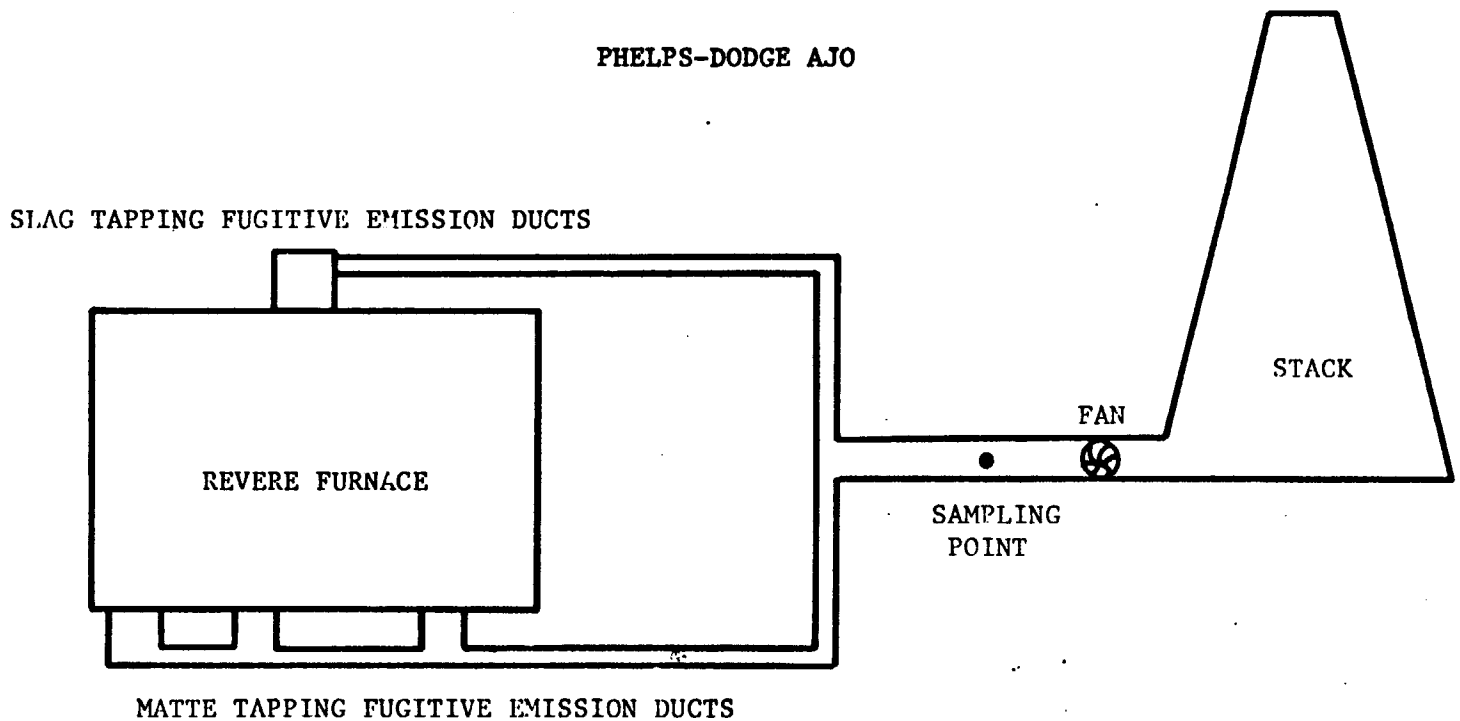

Figure 16. Matte tapping fugitive emission system

Figure 17. ESP inlet sampling locations.

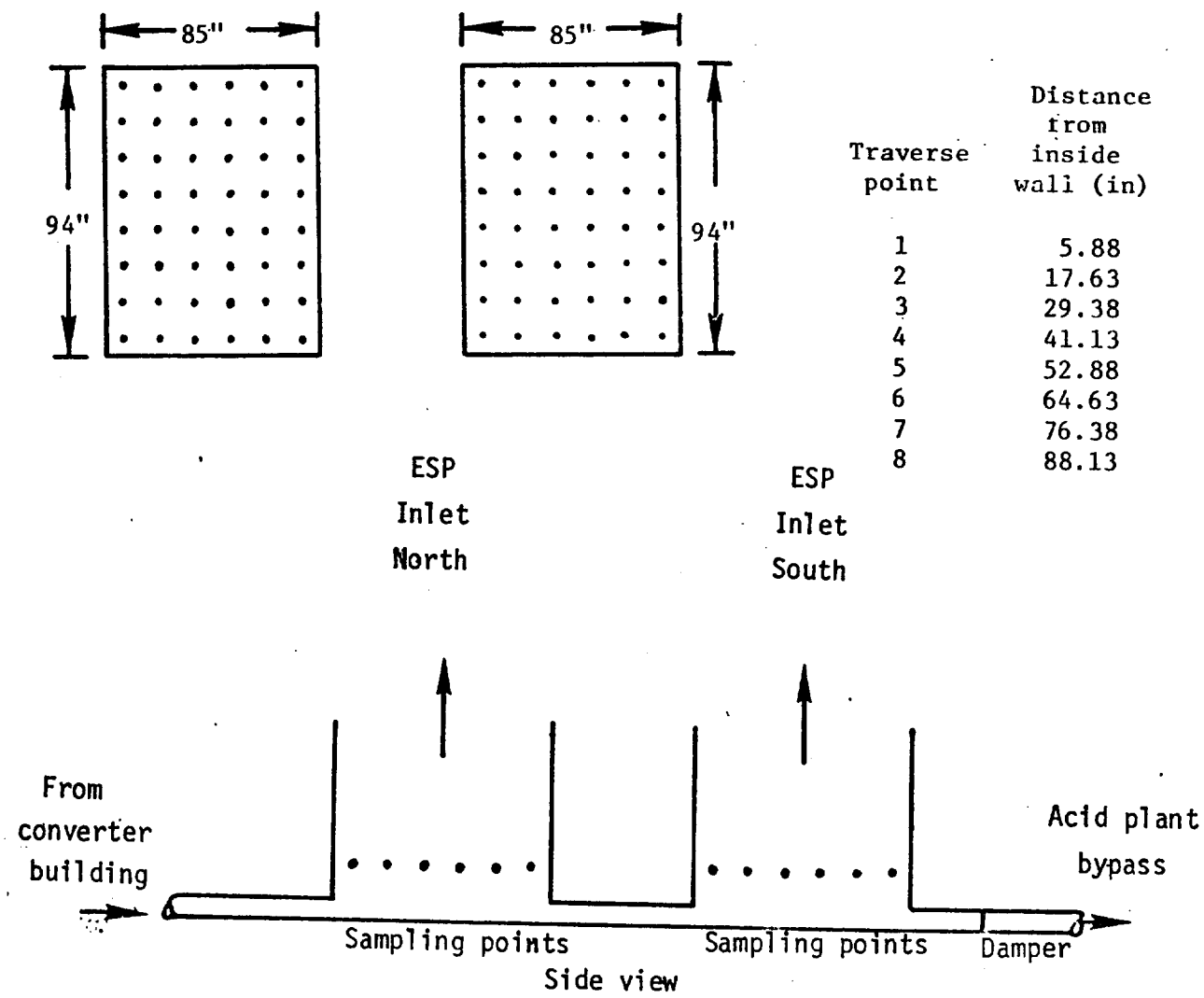

Distance of sampling point from port

Traverse point	Distance from inside wall (in)
1	5.88
2	17.63
3	29.38
4	41.13
5	52.88
6	64.63
7	76.38
8	88.13

Traverse point locations	Fraction of stack I.D.	Distance from inside wall (in)
1	.044	2.35
2	.146	7.91
3	.296	15.98
4	.704	38.02
5	.854	46.09
6	.956	51.65

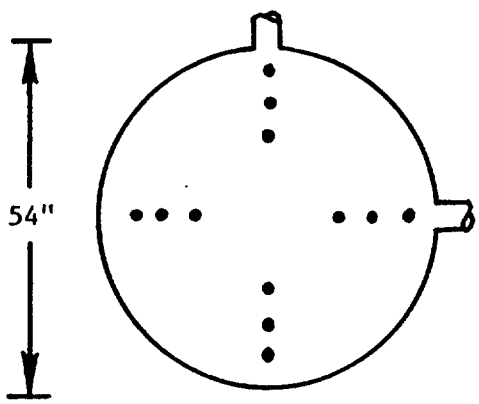

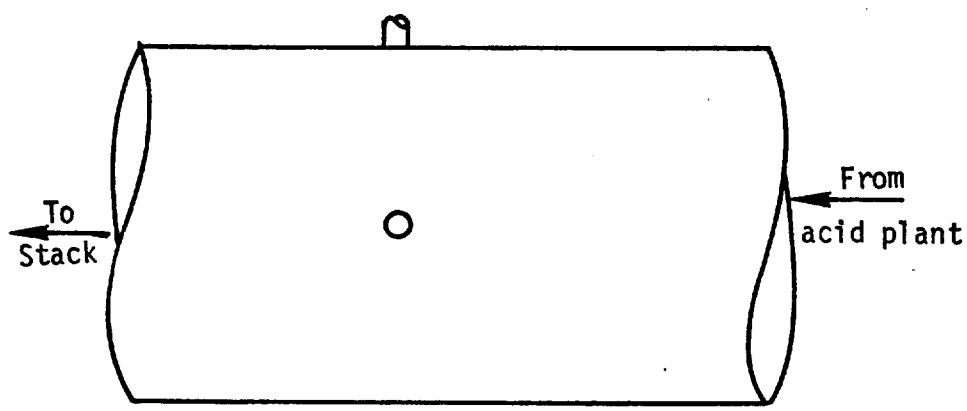

Figure 18. Acid plant outlet location.

horizontal sampling. The nearest upstream disturbance was located 12 feet (2 duct diameters) from the sampling positions. The nearest downstream flow disturbance was at least 30 feet (5 duct diameters) away from the sampling position. Thirty-six traverse points were selected with eighteen points on each traverse. Figure 19 is a diagram of the sampling location. Figure 20 depicts the acid plant sampling locations in relation to each other.

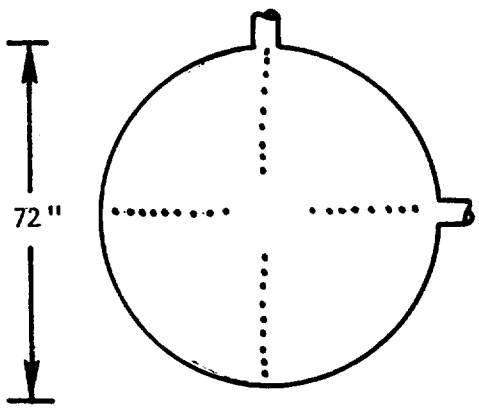

Traverse point locations	Fraction of stack I.D.	Distance from inside wall (in)
1	0.014	1.01
2	0.044	3.14
3	0.075	5.41
4	0.109	7.86
5	0.146	10.54
6	0.188	13.55
7	0.236	17.03
8	0.246	21.30
9	0.382	27.51
10	0.618	44.49
11	0.704	50.70
12	0.764	54.97
13	0.812	58.45
14	0.854	61.46
15	0.891	64.14
16	0.925	66.59
17	0.956	68.86
18	0.986	70.99

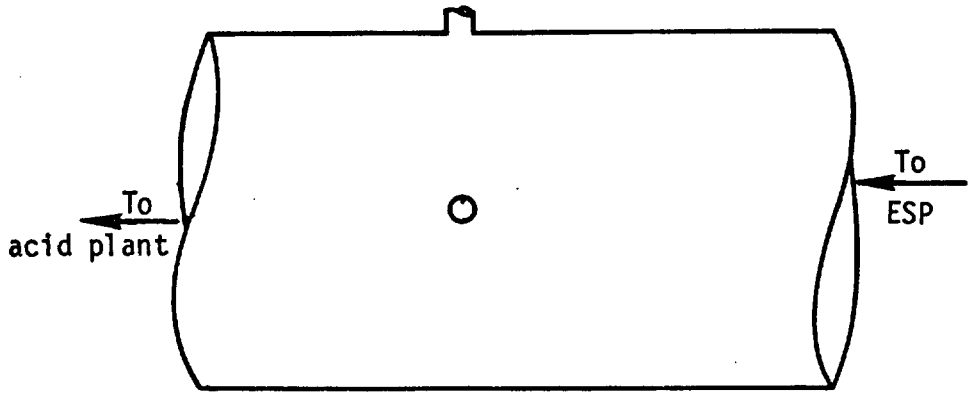

Figure 19. ESP outlet/acid plant inlet sampling location.

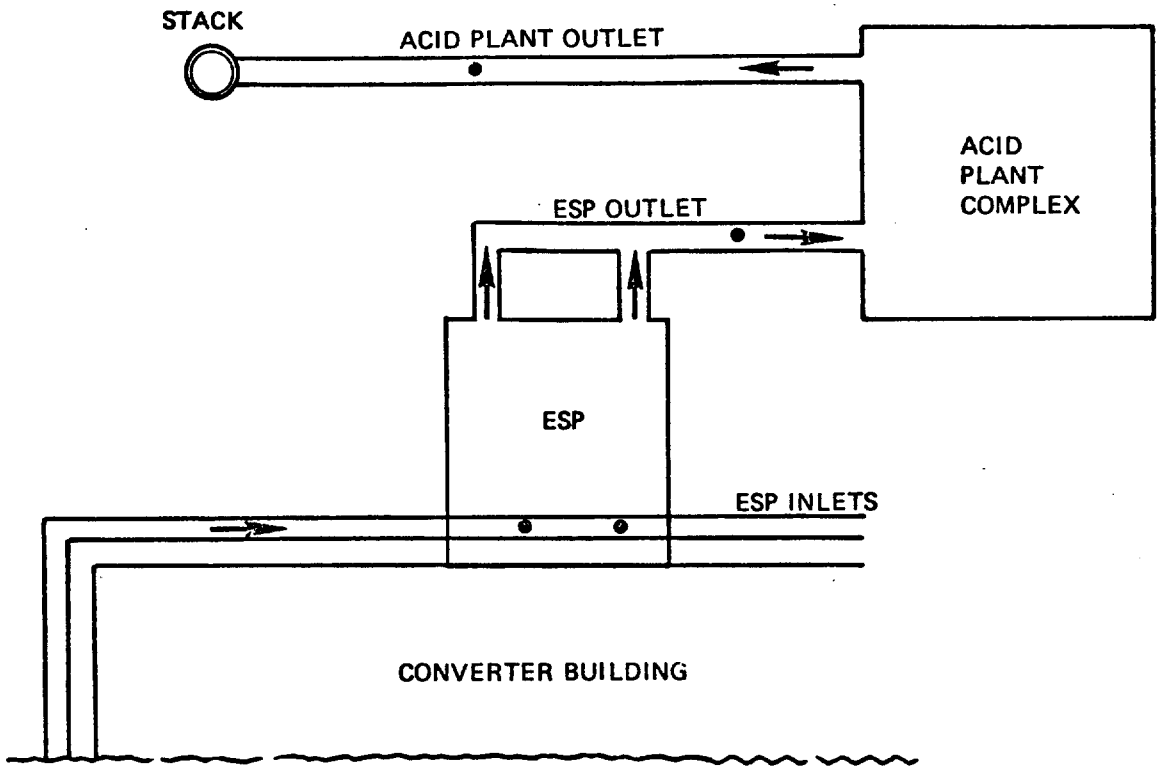

Figure 20.

Acid plant schematic

Phelps-Dodge Ajo, Arizona

Phelps-Dodge - Playas, New Mexico; TRW test program

Outlet from Converter Hooding System

Samples from converter hooding system were taken from a seven foot diameter horizontal duct located approximately 50 feet above the ground. The sampling ports on the top and side of the duct allowed for vertical and horizontal traverses during sampling. The nearest upstream flow disturbance was 7 duct diameters from the sampling location. The nearest downstream flow disturbance was greater than ten duct diameters from the sampling location, where there was a 90° bend. Twelve traverse points, six on each traverse were used. Sampling was done for twenty minutes per point to provide sampling through a complete copper blow cycle. Figure 21 illustrates the cross-sectional view.

Traverse point locations

Traverse Point Locations	Fraction of Stack I.D.	Distance From Inside Wall (in)
1	.044	3.66
2	.146	12.30
3	.296	24.85
4	.704	59.15
5	.854	71.70
6	.956	80.34

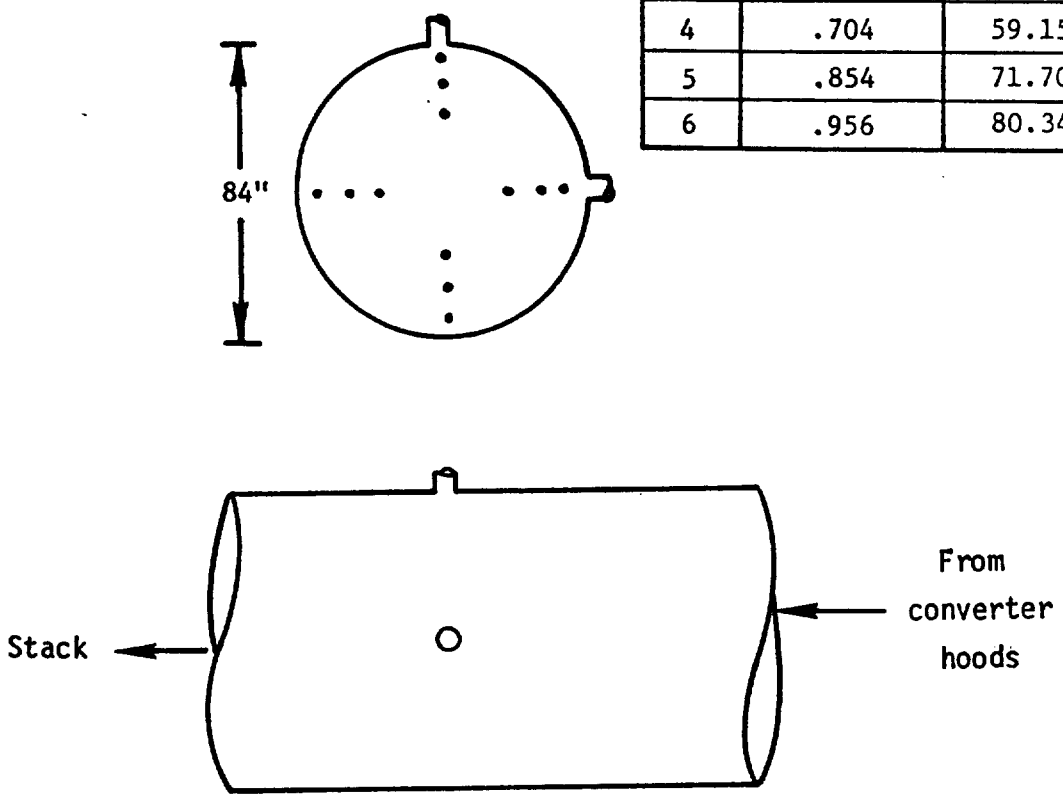

Figure 21. Converter fugitive emission duct.

Asarco - Tacoma, Washington; TRW test program

1) Roaster baghouse inlet - The duct carrying emissions from the roasting process is balloon shaped, measuring 11 feet high and 8 feet wide at the widest point. Sampling was done through four 4 inch sampling ports on top of the flue. The nearest upstream disturbance was 50 feet (4 diameters) away, the nearest downstream disturbance was a transition section into the baghouse which was 10 feet away. Sampling was done at 20 traverse points. Figure 22 is a diagram of the sampling location.

2) Roaster baghouse outlet - The treated gas leaving the roaster baghouse was sampled approximately 1000 feet downstream from the baghouse. The discharge duct was round, had an inside diameter of 90 inches, and had sampling ports on the side and top. The nearest upstream disturbance was 100 feet (13 diameters) and the nearest downstream disturbance was 40 feet (4 1/2 diameters) away. Sampling was done at 12 traverse points. Figure 23 is a diagram of this sampling location.

3) Reverberatory furnace electrostatic precipitator - The outlet of the electrostatic precipitator treating the emissions from the reverberatory furnace has approximately 75 feet of straight ducting before entering the main stack. There were ten sampling ports on the top of the rectangular brick flue, which were 20 feet from the transition section leaving the electrostatic precipitator. Forty-eight traverse points were chosen for sampling, but it was found that a significant amount of sediment in the duct precluded sampling at twelve of them. Figure 24 is a diagram of this location.

4) Matte tapping - Matte tapping emissions are captured by a moveable hood over the matte tapping ladle and are ducted to the brick flue which goes to the main stack after passing through an electrostatic precipitator. These emissions were sampled in a vertical section of the round duct approximately 100 feet above the hood. The nearest upstream disturbance was 75 feet (22 diameters) away and the nearest downstream disturbance was 10 feet (3 diameters) away. Samples were taken at eight traverse points during matte tapping operations. Figure 25 is a diagram of this sampling location.

5) Slag tapping - Slag tapping emissions are captured by a hood over the slag trough and are ducted to the same brick flue as are the matte tapping emissions. The emissions were sampled in a section which angles down 20° from the horizontal. The sampling ports are twenty feet downstream from a 20° bend (5 diameters), and seven feet upstream from a 60° bend (2 1/2 diameters). Samples were taken at twelve traverse points during slag tapping operations. Figure 26 is a diagram of this location.

6) Calcine discharge - Dust emissions from loaging lorry cars from the roasters are collected from slots in the loading apparatus. These emissions in turn are routed to the main brick flue through a 10 inch duct. The emissions were sampled 9 feet (11 diameters) downstream from the blower, which was the nearest upstream disturbance. Samples were

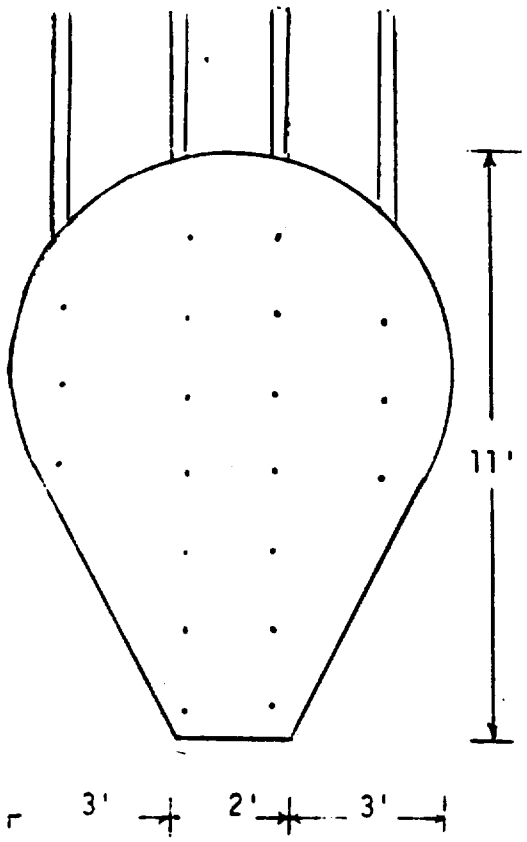

Traverse Point	Distance from Wall
1	9.4
2	28.3
3	47.1
4	66.0
5	84.9
6	103.7
7	122.6

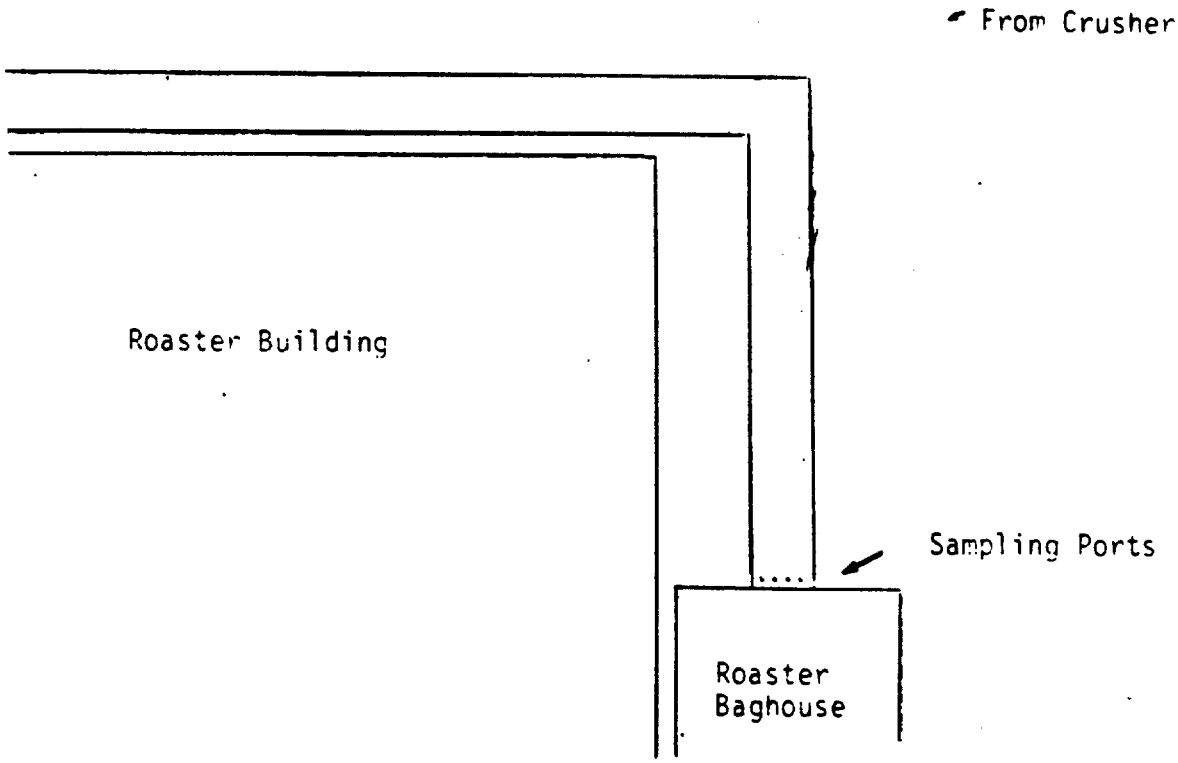

Figure 22. Roaster Baghouse Inlet

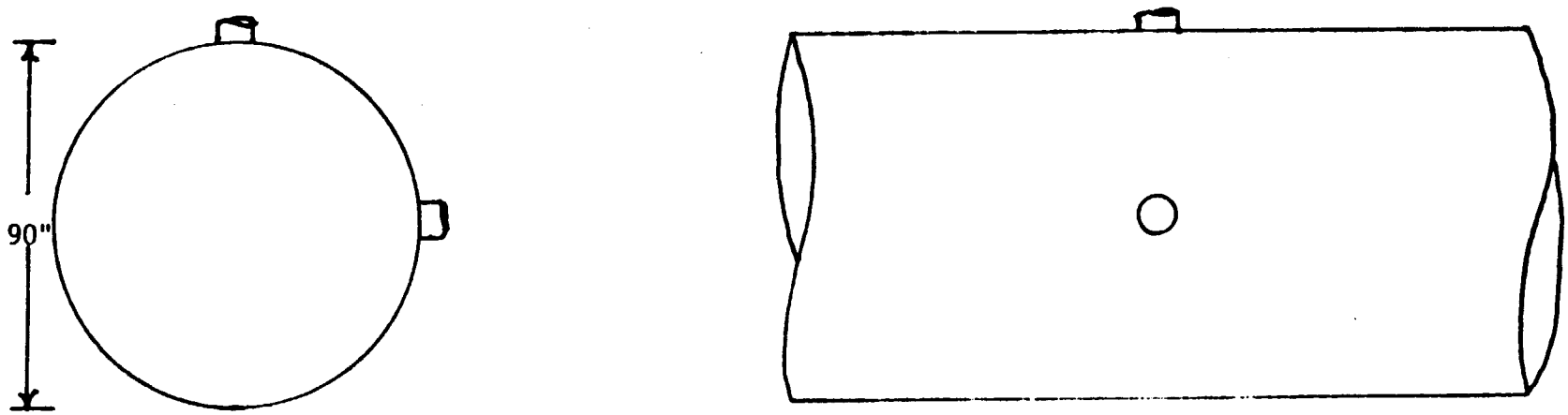

Traverse Point Location

Traverse Point Number	% of Diameter	Distance from inside wall
1	4.4	4.0
2	14.6	13.1
3	29.6	26.6
4	70.4	63.4
5	85.4	76.9
6	95.6	86.0

Figure 23. Roaster Baghouse Outlet Duct.

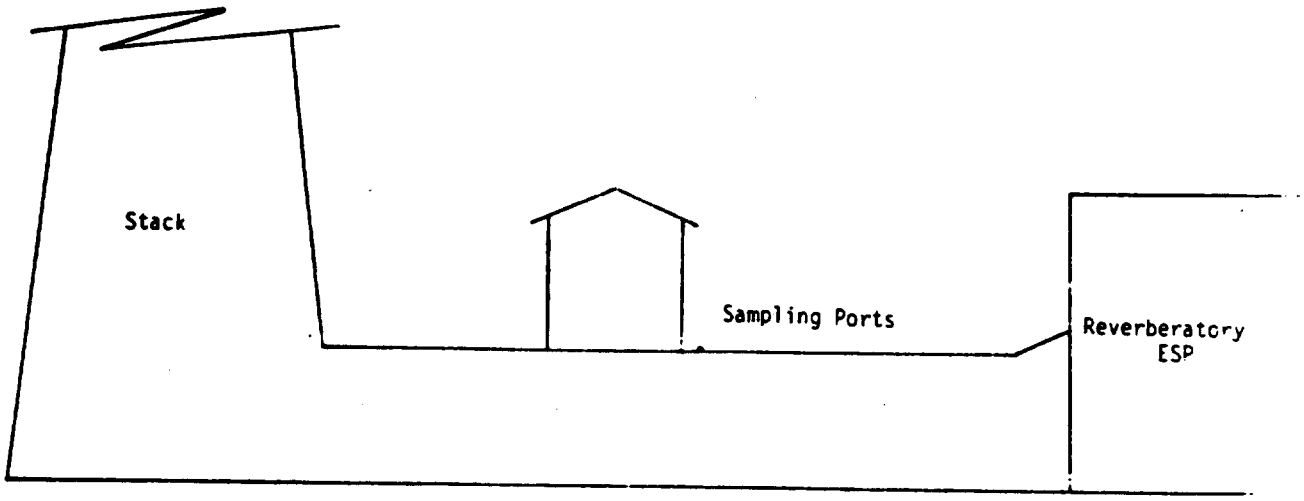

Side View

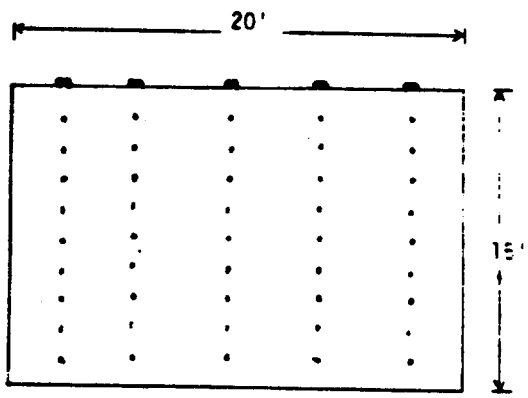

Cross Section

Traverse Point	Distances from top of Duct
1	9"
2	27"
3	45"
4	63"
5	81"
6	99"
7	117"
8	135"
9	153"
10	171"

Figure 24. Reverberatory furnace electrostatic precipitator.

Traverse Point Location

Traverse Point Number	% of Diameter	Distance from inside wall
1	6.7	1.8
2	25.0	6.6
3	75.0	19.9
4	93.3	24.7

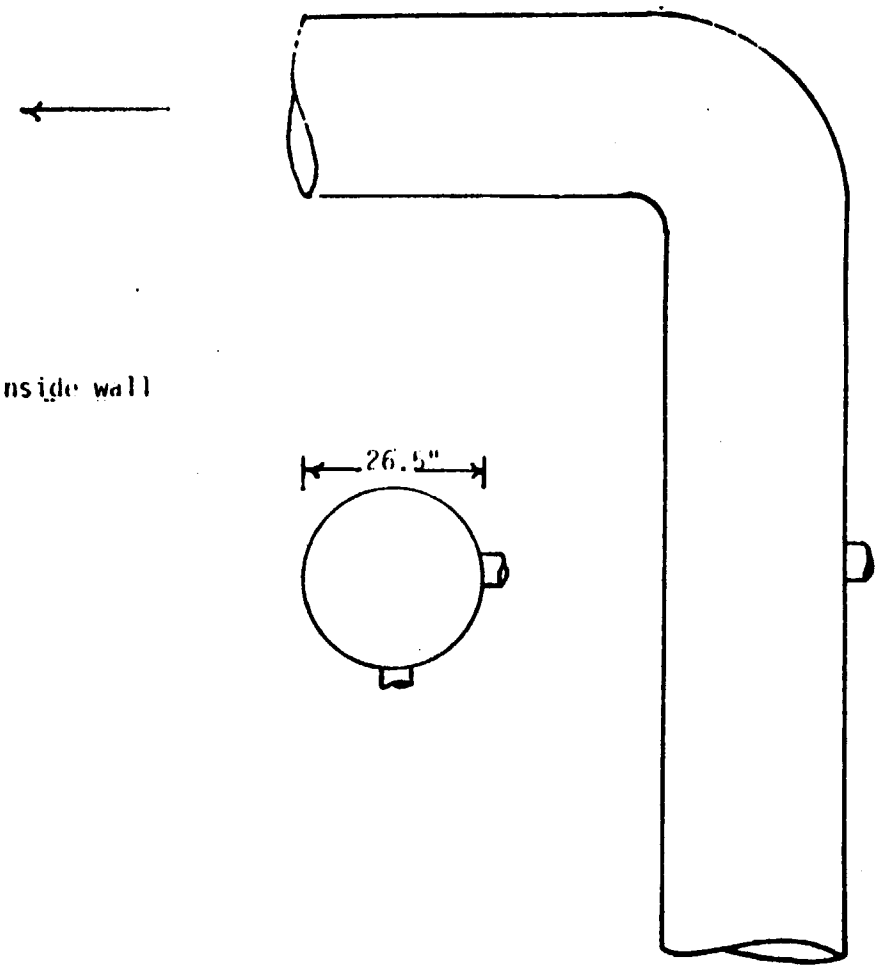

Figure 25. Matte tapping.

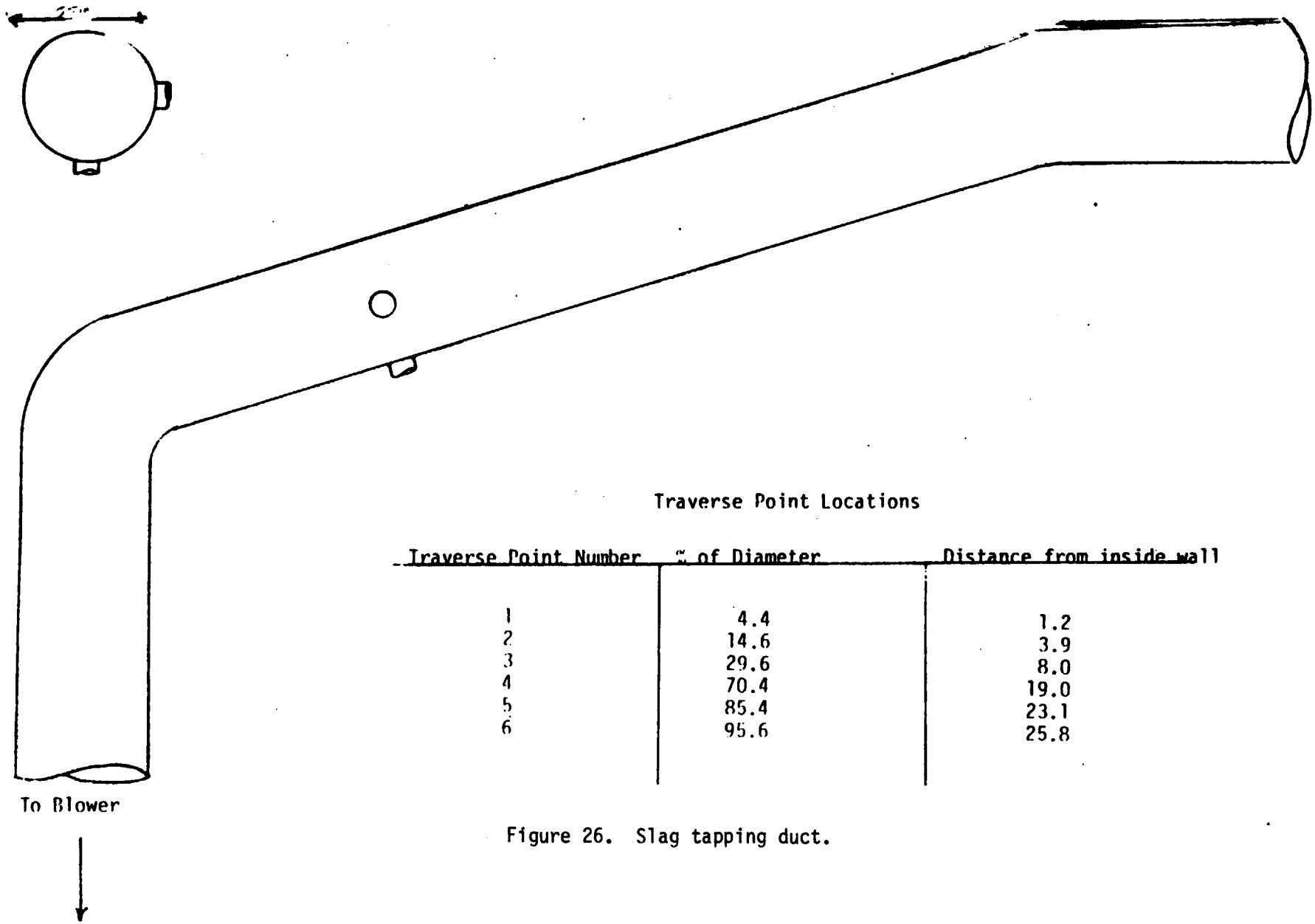

Traverse Point Locations

Traverse Point Number	% of Diameter	Distance from inside wall
1	4.4	1.2
2	14.6	3.9
3	29.6	8.0
4	70.4	19.0
5	85.4	23.1
6	95.6	25.8

Figure 26. Slag tapping duct.

taken at a single point due to the small duct diameter. Sampling was done only while lorry cars were being loaded. Figure 27 is a diagram of this location.

7) Arsenic kitchen - Arsenic trioxide is produced in the arsenic kitchen area. The effluent gases from this process are routed through a baghouse before being discharged through the main stack. The sampling location was at a vertical round duct which is 26 1/2 inches in diameter. The nearest upstream disturbance was the transition from the arsenic kitchen, a reducing section of ducting, which was 6 feet (3 diameters) away. The nearest downstream disturbance was a 90° bend 5 feet (2 diameters) away. Sampling was done at 24 traverse points. Figure 28 is a diagram of this location.

8) Metallic arsenic - In the metallic arsenic area, arsenic trioxide is converted to elemental arsenic. The effluent gases from this process are routed to the same baghouse as are the arsenic kitchen discharges. The sampling location for this emission stream was in a 37.25 inch round duct which slanted up at a 20° angle from the horizontal. The nearest upstream flow disturbance was 50 feet (16 diameters) away, and the nearest downstream flow disturbance was 6 feet (2 diameters) away. Sampling was done at twelve traverse points. Figure 29 is a diagram of this location.

9) Arsenic baghouse outlet - The discharge gases from the arsenic kitchen baghouse were sampled approximately 500 feet downstream from the baghouse. Samples were taken from a round horizontal duct with an inside diameter of 37.75 inches. The nearest upstream flow disturbance was 75 feet (24 diameters) away, and the downstream disturbance was 30 feet (9 1/2 diameters) away. Samples were taken at twelve traverse points simultaneously with tests at the two inlet locations. Figure 30 is a diagram of this location.

10) Converter slag return - During the converter cycle slag is periodically poured off the matte. This slag is returned to the reverberatory furnace. The fugitive emissions discharged during this process are captured by a hooding system. These emissions were sampled from a round horizontal duct 36 inches in diameter. The nearest upstream flow disturbance was 100 feet (33 diameters) and the nearest downstream flow disturbance was 25 feet (8 diameters) away. Samples were taken at 12 traverse points. Figure 31 is a diagram of this location.

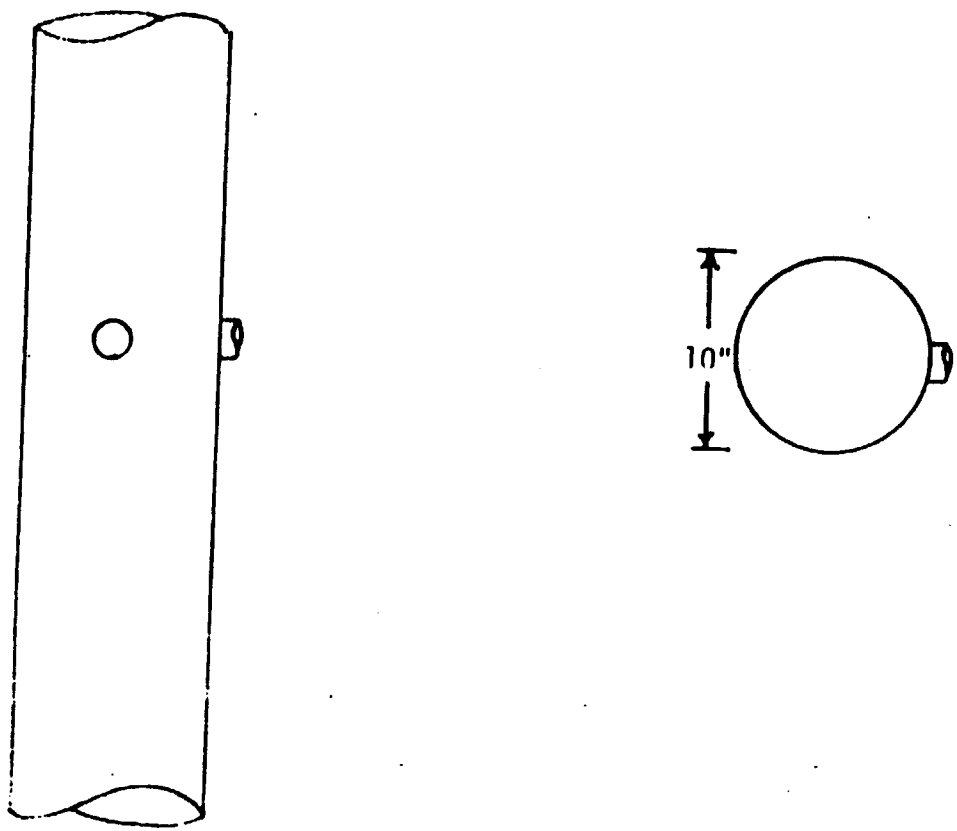

Figure 27. Calcine discharge duct.

Traverse Point Number	% of Duct Diameter	Distance from inside wall
1	2.1	1.0
2	6.7	1.8
3	11.8	3.1
4	17.7	4.7
5	25.0	6.6
6	35.6	9.4
7	64.4	17.1
8	75.0	19.9
9	82.3	21.8
10	88.2	23.4
11	93.3	24.7
12	97.9	25.4

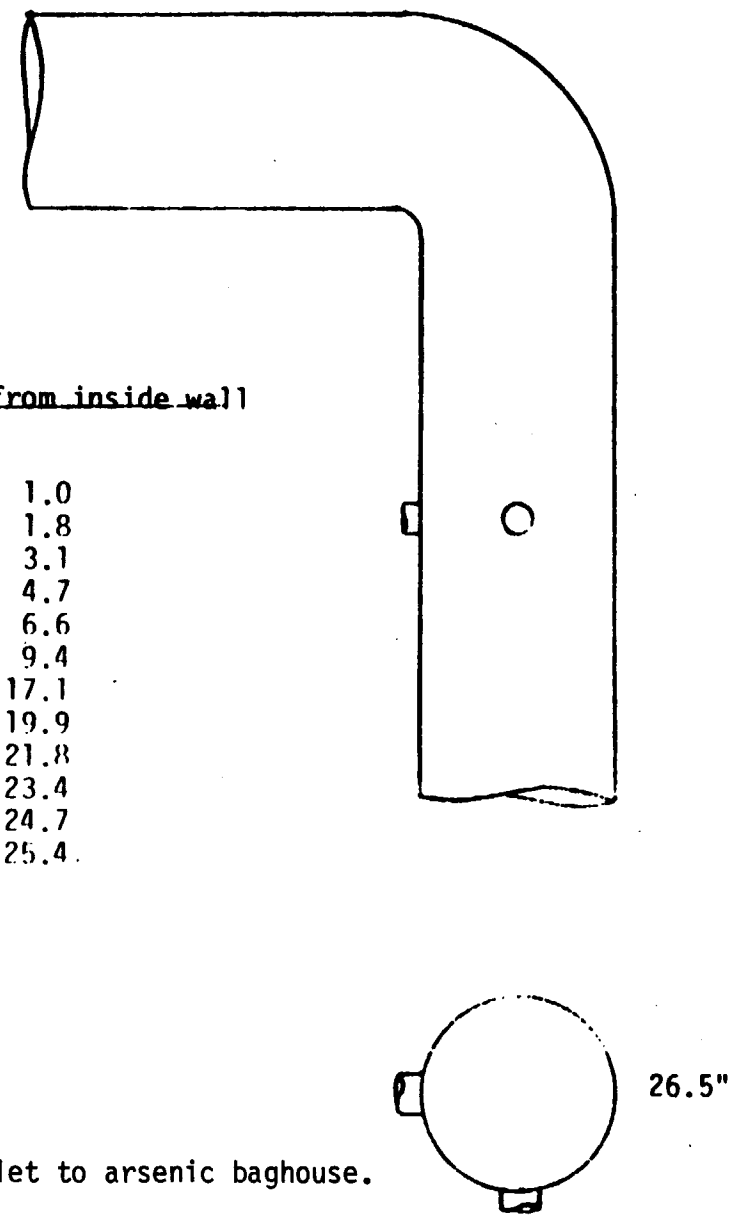

Figure 28. Arsenic kitchen inlet to arsenic baghouse.

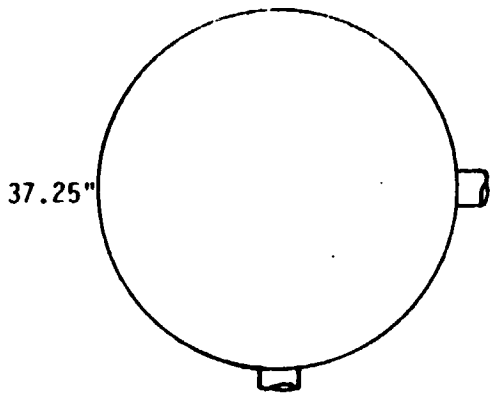

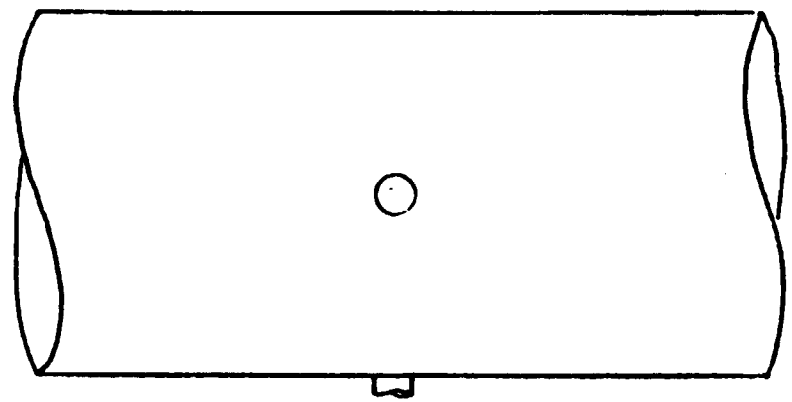

Traverse Point Locations

Traverse Point Number	% of Diameter	Distance from inside wall
1	4.4	1.6
2	14.6	5.4
3	29.6	11.0
4	70.4	26.2
5	85.4	31.8
6	95.6	35.6

Figure 29. Metallic arsenic inlet to arsenic baghouse.

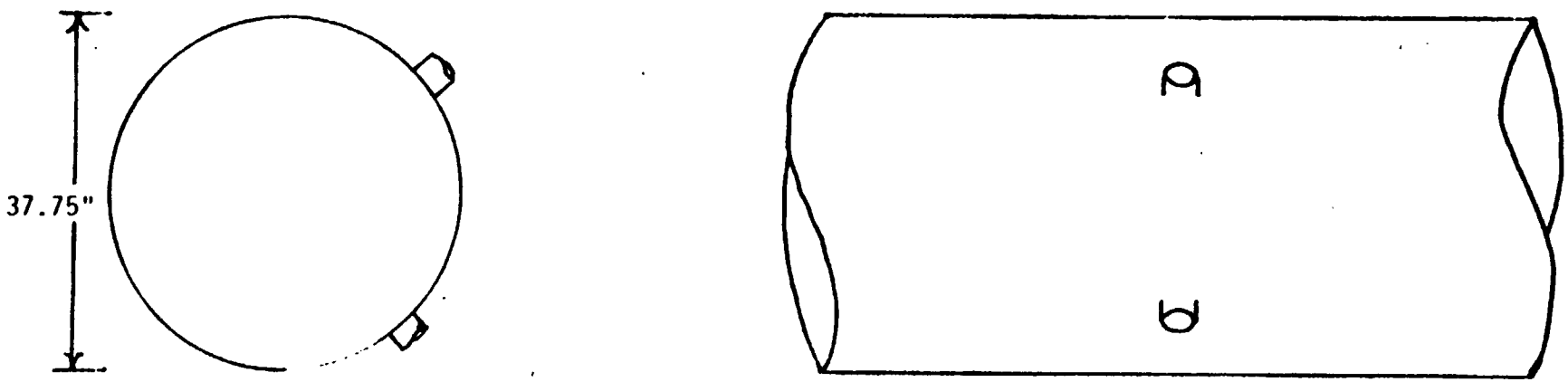

Traverse Point Location

Traverse Point #	% of Diameter	Inches from inside wall
1	4.4	1.7
2	14.6	5.5
3	29.6	11.2
4	70.4	26.6
5	85.4	32.2
6	95.6	36.1

Figure 30. Arsenic baghouse outlet duct.

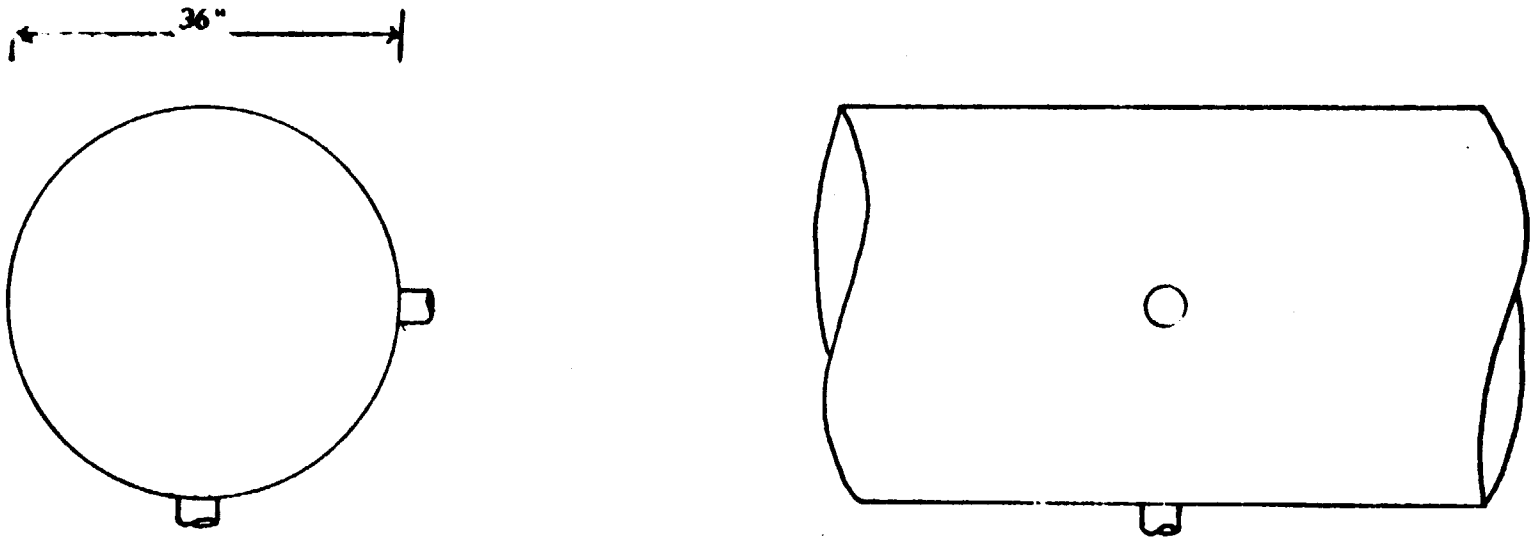

Trverse Point Number	% of Diameter	Distance from inside wall
1	4.4	1.6
2	14.6	5.3
3	29.6	10.7
4	70.4	25.3
5	85.4	30.7
6	95.6	34.4

Figure 31. Converter slag return duct.

Kennecott - Magma, Utah; TRW test program

Matte Tapping Fugitive Emission Duct

Samples from the matte tapping fugitive emission duct were taken from a 60" vertical duct located approximately 75 feet above the ground. Two sampling ports located at a 90° to each other allowed for horizontal traverses during sampling. The nearest upstream flow disturbance was located 20 feet (4 duct diameters) away from the sampling point. The nearest downstream disturbance was located 10 feet (2 duct diameters) from the sample location. Twenty-four traverse points were selected with twelve points on each traverse. Figure 32 is a schematic of the sampling location.

Slag Tapping Fugitive Emission Duct

Slag tapping fugitive emission samples were taken through a 60" vertical duct located approximately 75 feet above the ground. One sampling port was utilized for both horizontal traverses during sampling. The nearest upstream flow disturbance was located approximately 20 feet (4 duct diameters) away from the sampling position. The nearest downstream disturbance was a bend located 10 feet (2 duct diameters) away from the sampling location. Twenty-four traverse points were selected with twelve points on each traverse. Figure 33 is a diagram of this sampling location.

Acid Plant Inlet

Acid plant inlet samples were taken through a 60" horizontal duct located approximately 8 feet above the ground. The sampling ports on the top and side of the duct allowed for vertical and horizontal traverses. The nearest upstream flow disturbance was a bend located approximately 20 feet (4 duct diameters) away from the sampling position. The nearest downstream disturbance was located 10 feet (2 duct diameters) away from sampling position. Twenty-four traverse points were selected with twelve points on each traverse. Figure 36 is a schematic of the sampling location.

Converter Fugitive Emission Duct

Converter fugitive emission samples were taken through a 38" x 84" rectangular vertical duct located approximately 60 feet from the ground. Six sampling ports were evenly spaced across the 84" face of the duct that allowed for horizontal sampling. The nearest upstream flow disturbance was located approximately 4 feet (1 duct diameter equivalent) away from the sampling position. The nearest downstream disturbance was a bend located approximately 8 feet (2 duct diameter equivalent) away from the sampling points. Figure 37 is a schematic of this sampling location.

Concentrate Dryer Stack

Concentrate dryer fugitive samples were taken through a 84" diameter vertical fiberglass duct located approximately 110 feet above the ground. Two sampling ports place at right angles allowed for horizontal traverses

during sampling. The nearest downstream disturbance was the stack exit which was 40 feet (6 duct diameters) from the sampling points. The nearest upstream disturbance was two ducts entering the stack 56 feet (8 duct diameters) away from the sampling position. Figure 39 is a schematic of the concentrate dryer fugitive emission duct.

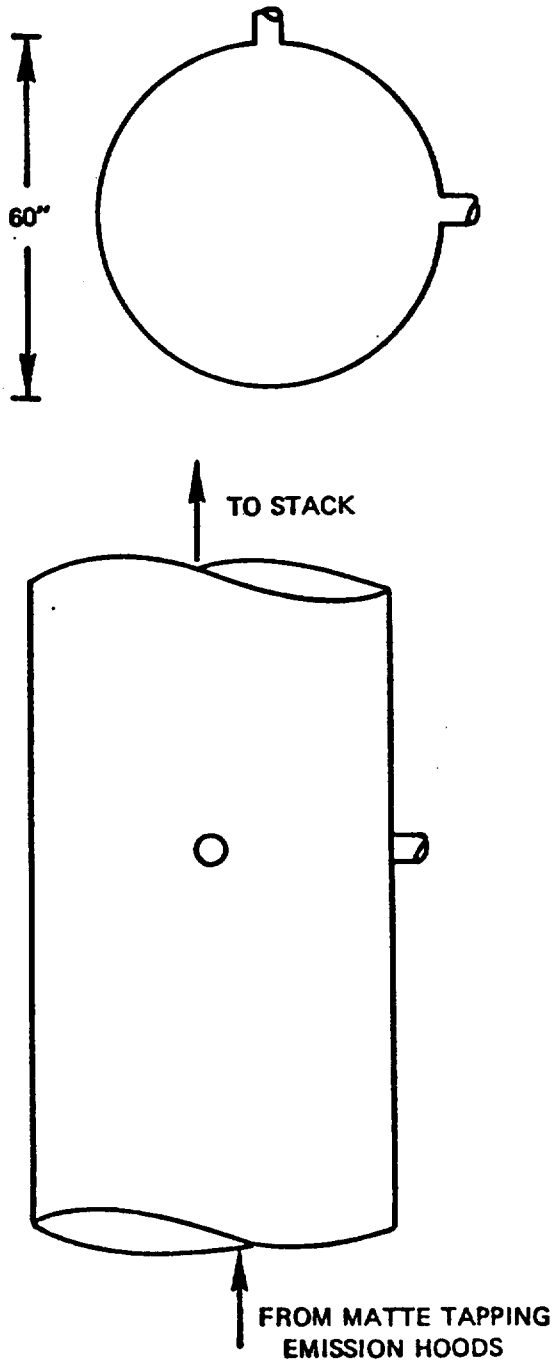

TRAVERSE POINT LOCATIONS

TRAVERSE POINT LOCATIONS	FRACTION OF STACK I.D.	DISTANCE FROM INSIDE WALL (IN)
1	.021	1.28
2	.067	4.02
3	.118	7.09
4	.177	10.64
5	.250	15.00
6	.356	21.34
7	.644	38.66
8	.750	45.00
9	.823	49.36
10	.882	52.91
11	.933	55.98
12	.979	58.72

MATTE TAPPING

Figure 32. Matte tapping.

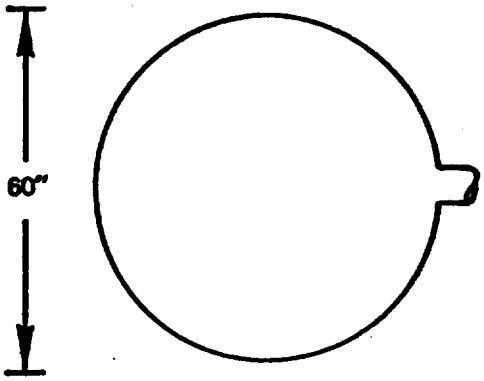

TRAVERSE POINT LOCATIONS

TRAVERSE #1

TRAVERSE POINT LOCATIONS	FRACTION OF STACK I.D.	DISTANCE FROM INSIDE WALL (IN)
1	.021	1.28
2	.067	4.02
3	.118	7.09
4	.177	10.64
5	.250	15.00
6	.356	21.34
7	.644	38.66
8	.750	45.00
9	.823	49.36
10	.882	52.91
11	.933	55.98
12	.979	58.72

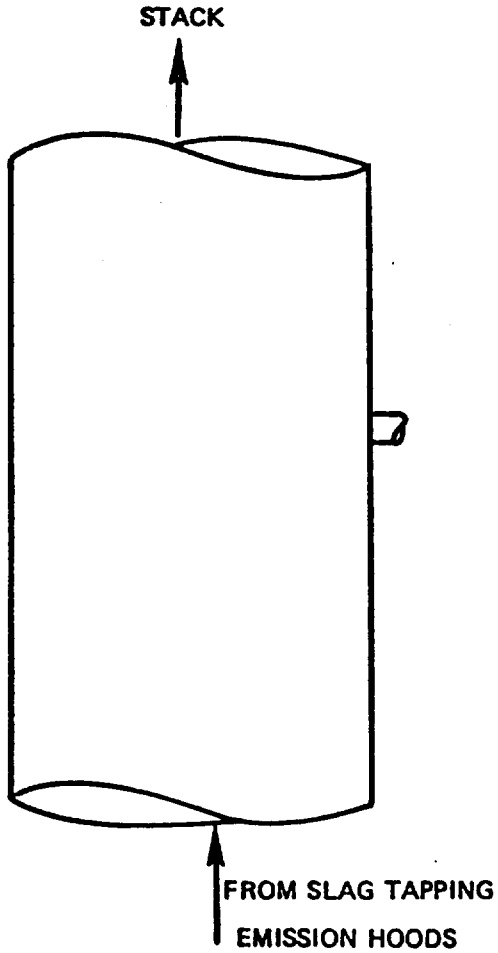

SLAG TAPPING

Figure 33. Slag tapping.

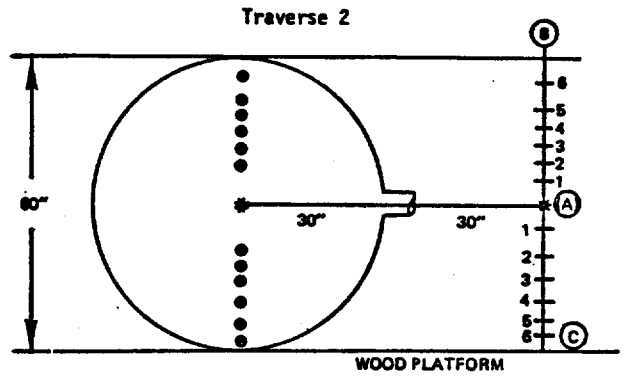

1. Points are marked on the wood platform as illustrated above. Note that 30" distance from the line marked on the wood platform and sampling port is the same as the radius of the duct.

2. Points marked on each line (AC) and (AB) from the center point A.

Point	Distance "
(AB)1	8.66
(AB)2	15.00
(AB)3	19.36
(AB)4	22.92
(AB)5	25.98
(AB)6	28.74
AC 1	8.66
AC 2	15.00
AC 3	19.36
AC 4	22.92
AC 5	25.98
AC 6	28.94

3. During Sampling

Point	Probe distance In Stack	Probe must intersect the line at the following points
1	41.55	AC 6
2	36.69	AC 5
3	37.75	AC 4
4	35.72	AC 3
5	33.54	AC 2
6	31.22	AC 1
7	31.22	AB 1
8	33.54	AB 2
9	35.72	AB 3
10	37.75	AB 4
11	39.69	AB 5
12	41.55	AB 6

Figure 34. Slag tapping fugitive emission duct traverse point location procedure.

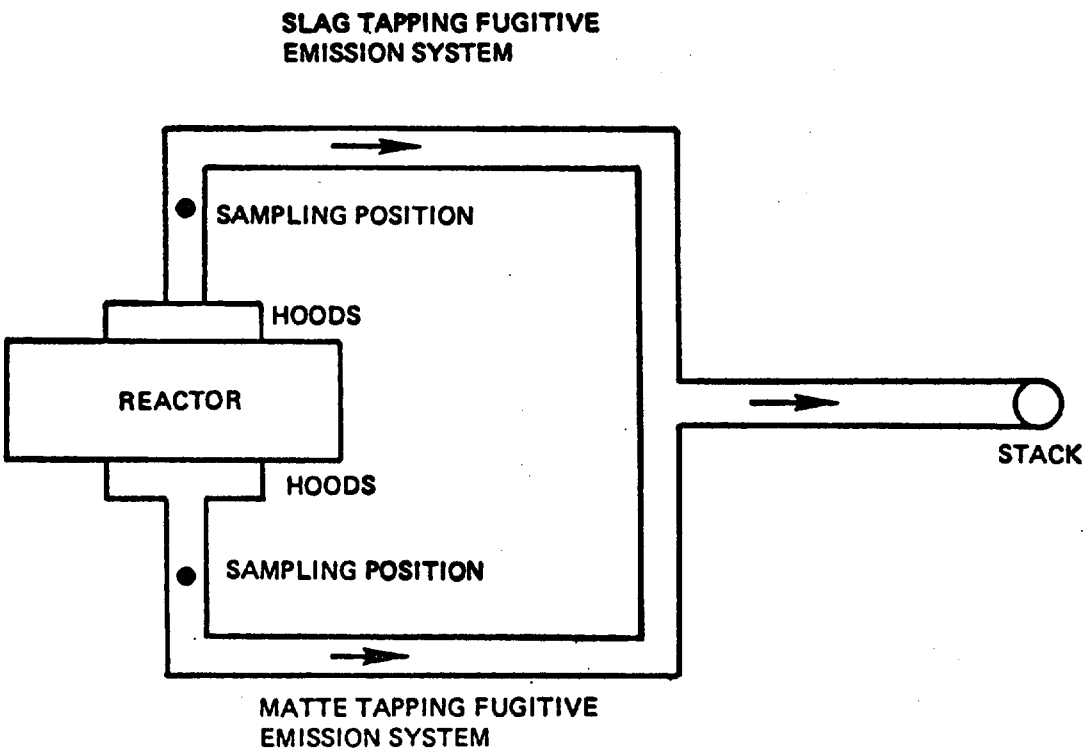

Figure 35. Plant schematic - The matte tapping and slag tapping fugitive emission system.

TRAVERSE POINT LOCATIONS

TRA-VERSE POINT LOCA-TIONS	FRACTION OF STACK I.D.	DISTANCE FROM INSIDE WALL (IN)
1	.021	1.28
2	.067	4.02
3	.118	7.09
4	.177	10.64
5	.250	15.00
6	.356	21.34
7	.644	38.66
8	.750	45.00
9	.823	49.36
10	.882	52.91
11	.933	55.98
12	.979	58.72

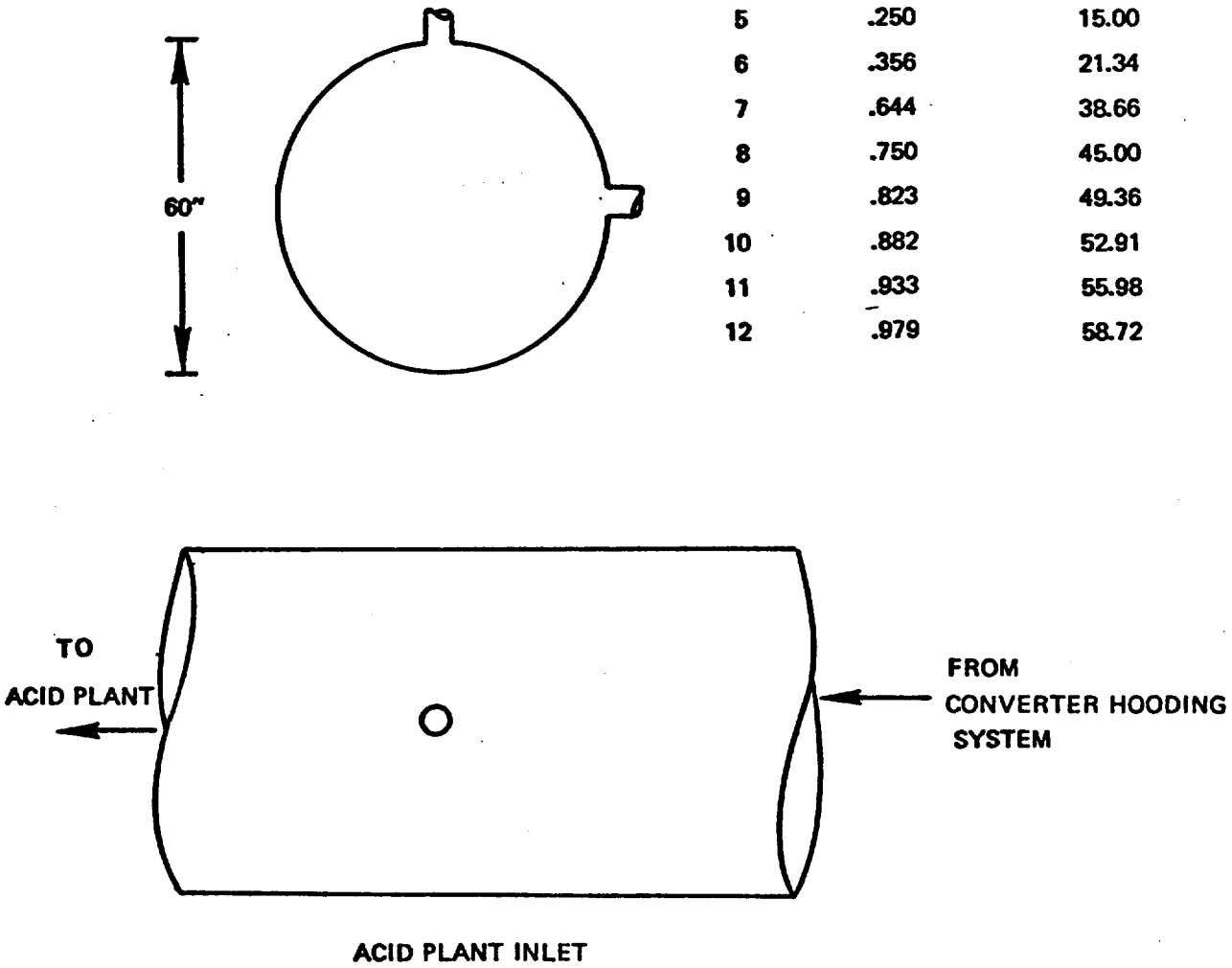

Figure 36. Acid plant inlet.

TRAVERSE POINT	FRACTION OF DUCT I.D.	DISTANCE FROM INSIDE WALL (IN)
1	.044	1.66
2	.146	5.56
3	.296	11.24
4	.704	26.76
5	.854	32.44
6	.956	36.34

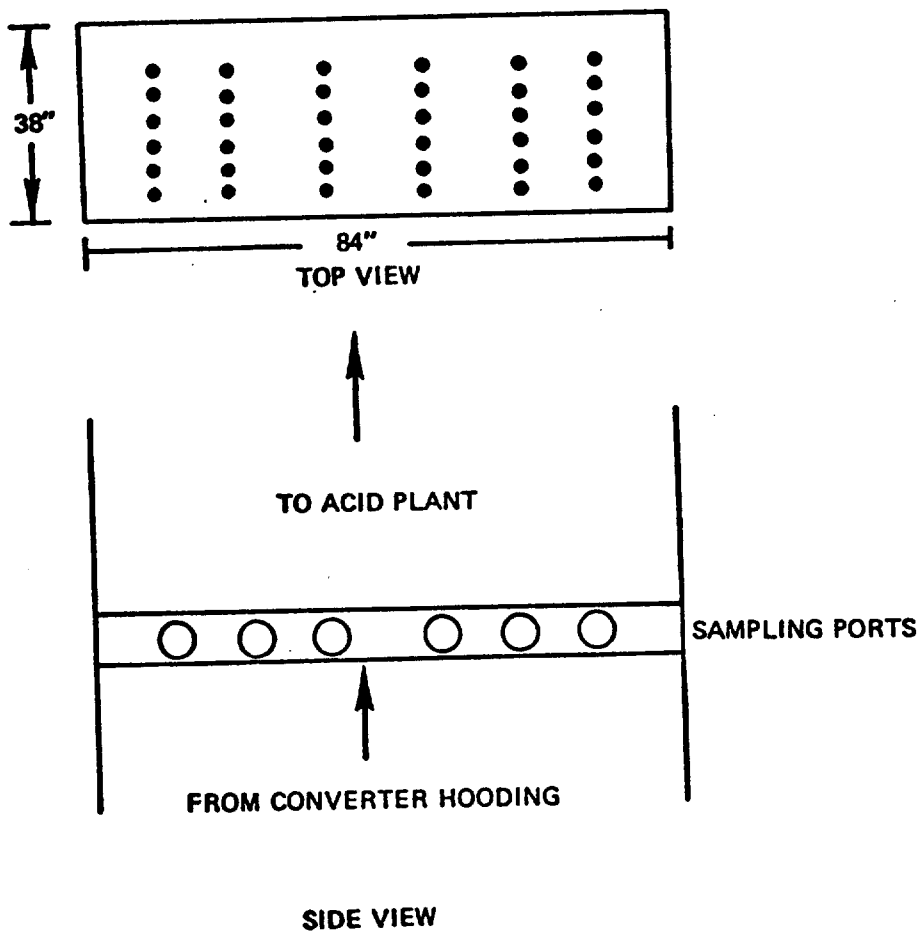

Figure 37. Converter fugitive emission system.

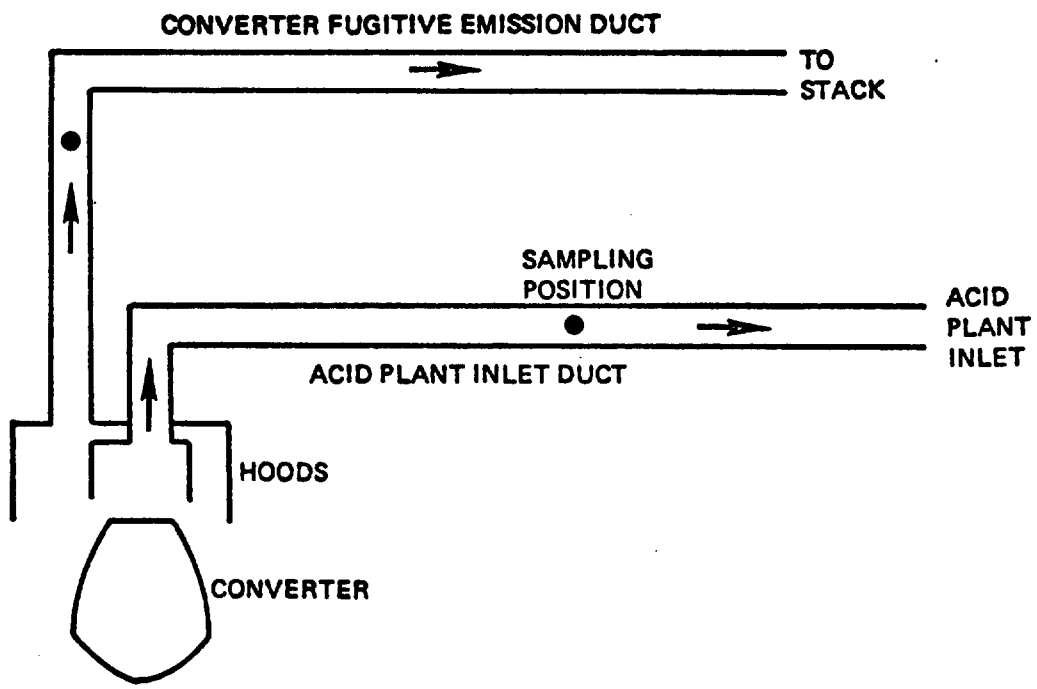

Figure 38. Plant schematic - converter fugitive emission system.

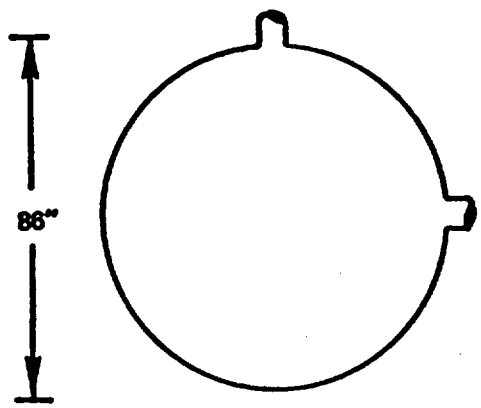

TRAVERSE POINT LOCATIONS

TRAVERSE POINT LOCATIONS	FRACTION OF STACK I.D.	DISTANCE FROM INSIDE WALL (IN)
1	.044	3.75
2	.146	12.59
3	.296	25.45
4	.704	60.55
5	.854	73.41
6	.956	82.25

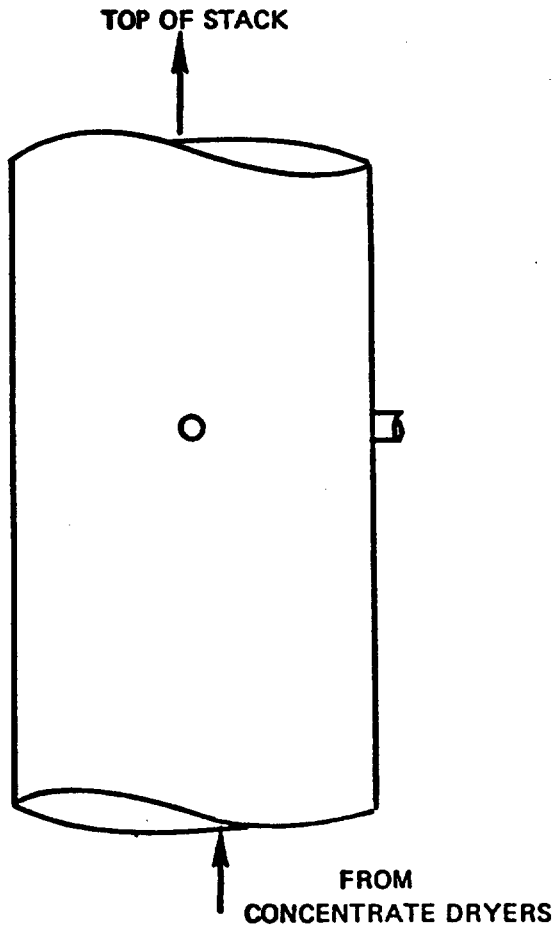

CONCENTRATE DRYER STACK

Figure 39. Concentrate dryer stack.

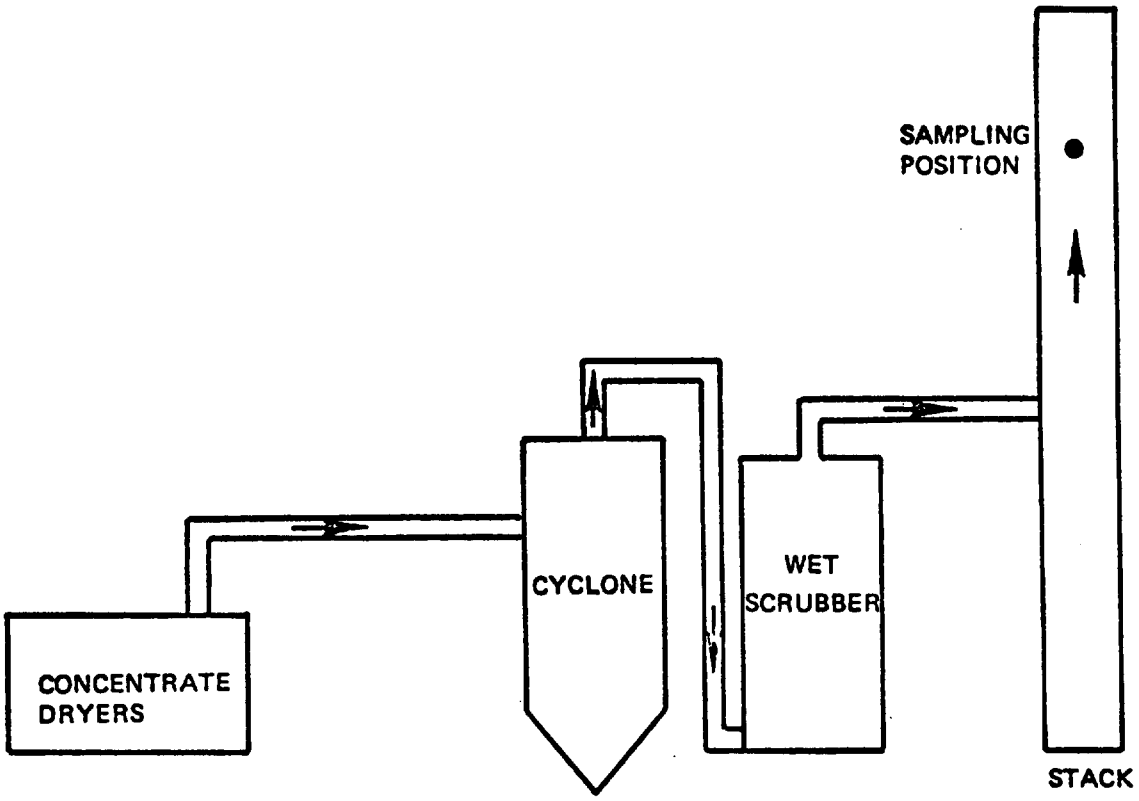

Figure 40. Plant schematic - Concentrate dryer fugitive emission system.

SECTION 4

SAMPLING AND ANALYTICAL PROCEDURE

SAMPLING

The sampling train used in this testing program consists of a modified EPA method 5 train (Figure 41). The trains used consisted of a seven impinger system with 150 ml of deionzed water in each of the first two impingers, an empty third impinger to minimize carry over, and a forth, fifth and sixth impinger with 150 ml of 10% hydrogen peroxide in each. The last impinger contained silica gel.

The sampling procedure was identical to that used in method 5, the sample being collected isokinetically at the centers of equal area within the duct.

SAMPLE RECOVERY

The sampling nozzle and probe liner were rinsed with 0.1 N NaOH and brushed with a nylon bristle brush. The filter and impingers were then removed to the mobile laboratory. The front half of the glass filter holder was also rinsed and brushed with 0.1 N NaOH and that rinse was combined with that of the probe and nozzle. The filter was then recovered from the holder and placed in a polyethylene container, labeled and sealed. The contents of the first two impingers were placed in a graduated cylinder and the volume recorded. The impingers and connecting glassware were then rinsed with 0.1 N NaOH and the rinse combined with the impinger contents in a glass sample bottle. During the test programs at Asarco in El Paso and Phelps-Dodge in Ajo and Douglas, Arizona the third impinger was rinsed separately and put in a glass sample bottle. Subsequent analysis of this rinse for arsenic showed no significant amount present and this part of the recovery was abandoned. During the test program at Asarco in Tacoma, Washington, a rinse of the probe and first and second impingers with 15% HNO_3 was applied to selected tests at the direction of the EPA project officer in order to determine the effectiveness of the 0.1 N NaOH rinse. The contents fourth, fifth, and sixth impingers were measured and the contents combined in glass sample bottles for later SO_2 analysis.

ANALYSIS

1. Filter - The filter was placed in a 150 ml beaker and 50 ml of 0.1 N NaOH was added and allowed to warm for about 15 minutes. Ten ml of concentrated HNO_3 was added and brought to a boil for 15 minutes. The mixture was then filtered through #41 Whatman paper, washed with hot water and the filtrate returned to the hot plate to evaporate.

When the solution was evaporated the beaker was removed from the hot plate and allowed to cool. 0.1 N HNO_3 was used to redissolve the residue and solution transfered to a 50 ml volumetric flask and diluted to volume. Many of the filters collected only small amounts of arsenic and the entire volume was needed in the previous analysis for arsenic by hydride evolution and were thus lost for purposes of lead analysis.

2. Probe Wash and Impinger Solutions - Fifty ml of probe wash or impinger solution was placed in a 150 ml beaker. Two ml of concentrated HNO_3 is added and the beaker was placed on the hot plate and allowed to evaporate. When evaporation was complete the beaker was allowed to cool and the residue redissolved with 0.1 N HNO_3 and transfered to a 50 ml volumetric flask and diluted to volume.

3. Process Samples - About 0.2 grams of sample was weighed into a tarred 150 ml teflon beaker and the weight recorded to the nearest 0.1 mg. Five ml of concentrated HNO_3 and 5 ml of concentrated HF were added and the beaker placed on grating just above the hot plate to prevent overheating of the teflon. The solution was evaporated and the digestion was repeated until a light-colored residue appeared. The residue was redissolved in 0.1 N HNO_3 and transfered to a 50 ml volumetric flask and diluted to volume.

4. Atomic Absorption - The analysis was performed with an Instrumentation Laboratories model 551 Atomic Absorption Spectrophotometer equipped with a model 555 graphite atomizer for samples below 0.1 ppm lead. The analysis was performed at the 217 nm lead resonance using a 1 nm bandpass and a 5 milliamp current to the lead hollow cathode lamp. Samples with a concentration above 0.1 ppm lead were analyzed using an air/acetylene flame. Samples below 0.1 ppm lead were analyzed using the graphite furnace atomizer.

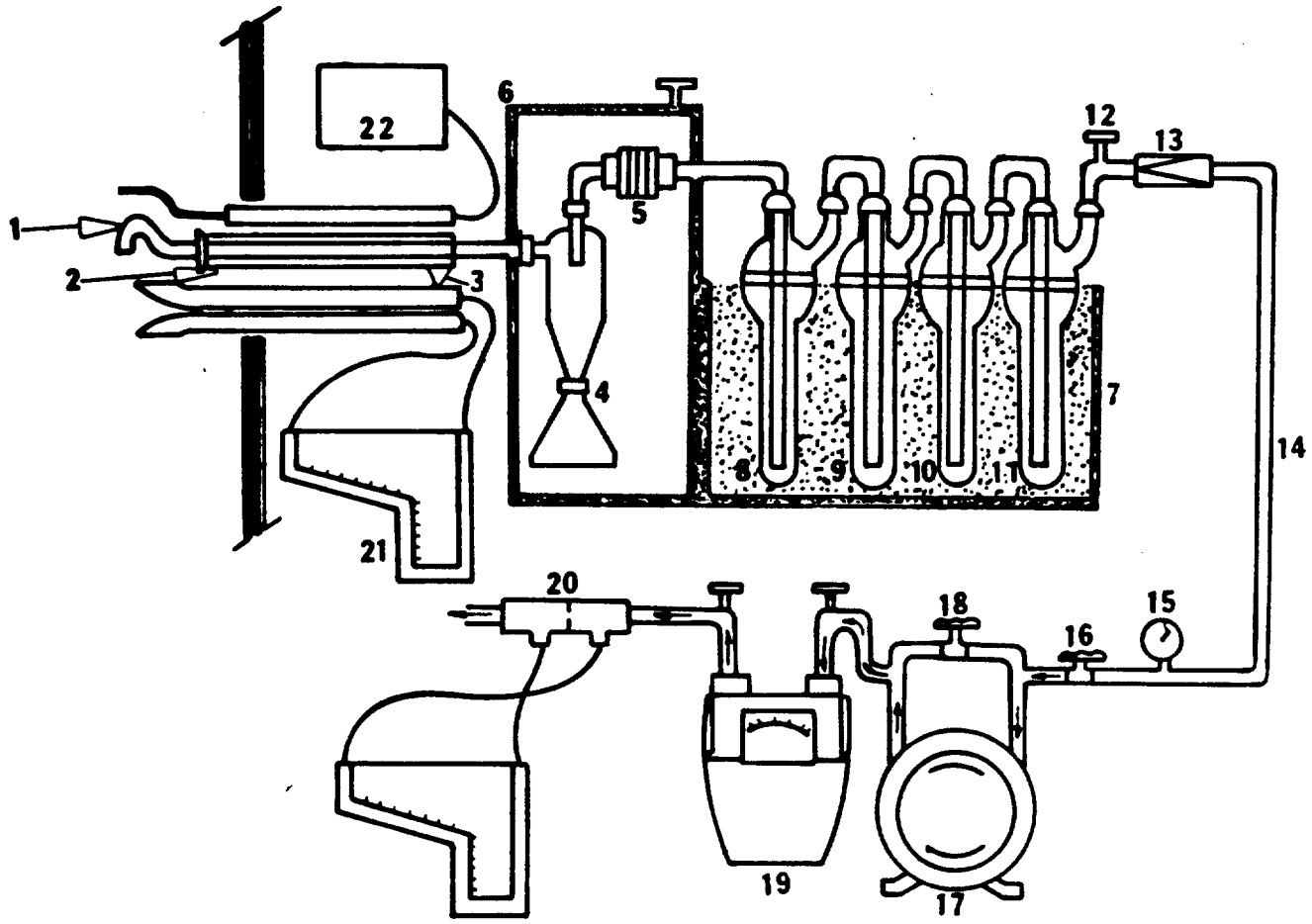

Figure 41. EPA method 5 particulate sampling train

KEY

1.	Calibrated Nozzle	12.	Thermometer
2.	Heated Probe	13.	Check Valve
3.	Reverse Type Pitot	14.	Vacuum Line
4.	Cyclone Assembly	15.	Vacuum Gauge
5.	Filter Holder	16.	Main Valve
6.	Heated Box	17.	Air Tight Pump
7.	Ice Bath	18.	ByPass Valve
8.	Impinger - (Water)	19.	Dry Test Meter
9.	Impinger - (Water)	20.	Orifice
10.	Impinger - (Water)	21.	Pitot Manometer
11.	Impinger - (Silica Gel)	22.	Thermometer

APPENDIX

SAMPLE INFORMATION
FOR LABORATORY OPERATIONS

DATE RECEIVED 5-31-78 LAB NO. 106

SAMPLING DATA

GEOGRAPHICAL ORIGIN Asarco, El Paso
SAMPLING LOCATION Dross Reverb Matte
SAMPLE TYPE composite process
SAMPLE NUMBERS N/A
SAMPLING METHOD grab
SAMPLED BY Asarco Personnel DATE SAMPLED
CONTAINER TYPE SAMPLE VOLUME
SAMPLE MATRIX

LOG REMARKS

ANALYTICAL DATA

DATE REPORT DUE

SAMPLE NO.	PARAMETERS	ANALYTICAL METHOD	VALUES	DATE OF ANALYSIS	REMARKS
	Pb	Atomic Absorption	0.257%	4-27-79	

SAMPLE INFORMATION
FOR LABORATORY OPERATIONS

DATE RECEIVED 5-25-78 LAB NO. 110

SAMPLING DATA

GEOGRAPHICAL ORIGIN Phelps-Dodge-Ajo
SAMPLING LOCATION Anode Sludgement
SAMPLE TYPE process
SAMPLE NUMBERS 13, 14
SAMPLING METHOD grab
SAMPLED BY P-D personnel DATE SAMPLED 5-11,12-78
CONTAINER TYPE SAMPLE VOLUME
SAMPLE MATRIX

LOG REMARKS

ANALYTICAL DATA

DATE REPORT DUE

SAMPLE NO.	PARAMETERS	ANALYTICAL METHOD	VALUES	DATE OF ANALYSIS	REMARKS
	Pb	Atomic Absorption	0.0028%	4-27-79	

SAMPLE INFORMATION
FOR LABORATORY OPERATIONS

DATE RECEIVED 5-25-78 LAB NO. 111

SAMPLING DATA

GEOGRAPHICAL ORIGIN Phelps-Dodge - Ajo
SAMPLING LOCATION Conv. Slag #3C
SAMPLE TYPE process
SAMPLE NUMBERS [illegible]
SAMPLING METHOD grab
SAMPLED BY D-D DATE SAMPLED 5-10, 11, 12-78
CONTAINER TYPE SAMPLE VOLUME
SAMPLE MATRIX

LOG REMARKS

ANALYTICAL DATA

DATE REPORT DUE

SAMPLE NO.	PARAMETERS	ANALYTICAL METHOD	VALUES	DATE OF ANALYSIS	REMARKS
	Pb	Atomic Absorption	0.810%	4-27-79	

SAMPLE INFORMATION
FOR LABORATORY OPERATIONS

DATE RECEIVED 5-25-78 LAB NO. 112

SAMPLING DATA

GEOGRAPHICAL ORIGIN Phelps-Dodge / Ajo
SAMPLING LOCATION Mafe FBC
SAMPLE TYPE process
SAMPLE NUMBERS 2 7 9
SAMPLING METHOD grab
SAMPLED BY P-D DATE SAMPLED 5-10,11,12-78
CONTAINER TYPE SAMPLE VOLUME
SAMPLE MATRIX

LOG REMARKS

ANALYTICAL DATA

DATE REPORT DUE

SAMPLE NO.	PARAMETERS	ANALYTICAL METHOD	VALUES	DATE OF ANALYSIS	REMARKS
	Pb	Atomic Absorption	0.032%	4-27-79	

SAMPLE INFORMATION
FOR LABORATORY OPERATIONS

DATE RECEIVED 5-19-78 LAB NO. 117

SAMPLING DATA

GEOGRAPHICAL ORIGIN Phelps-Dodge / Douglas
SAMPLING LOCATION outlet
SAMPLE TYPE modified method 5
SAMPLE NUMBERS DO-As-1
SAMPLING METHOD EPA As sampling train
SAMPLED BY Bob Jondeux DATE SAMPLED 5-3-78
CONTAINER TYPE SAMPLE VOLUME
SAMPLE MATRIX

LOG REMARKS fraction one consumed in previous analysis

ANALYTICAL DATA

DATE REPORT DUE

SAMPLE NO.	PARAMETERS	ANALYTICAL METHOD	VALUES	DATE OF ANALYSIS	REMARKS
-2	Pb	Atomic Absorption	99.4 µg	4-27-79	
-3	"	"	5 µg	4-27-79	

SAMPLE INFORMATION
FOR LABORATORY OPERATIONS

DATE RECEIVED 5-19-78 LAB NO. 118

SAMPLING DATA

GEOGRAPHICAL ORIGIN Phelps-Dodge/Douglas
SAMPLING LOCATION outlet
SAMPLE TYPE modified mech 1 5
SAMPLE NUMBERS DO-As-2
SAMPLING METHOD [illegible] for sampling train
SAMPLED BY Bob Jongieux DATE SAMPLED 5-4-78
CONTAINER TYPE SAMPLE VOLUME
SAMPLE MATRIX

LOG REMARKS fraction one consumed in previous analysis

ANALYTICAL DATA

DATE REPORT DUE

SAMPLE NO.	PARAMETERS	ANALYTICAL METHOD	VALUES	DATE OF ANALYSIS	REMARKS
-2	Pb	Atomic Absorption	42.5 µg	4-27-79	
-3	"	"	3 µg	4-27-79	

SAMPLE INFORMATION
FOR LABORATORY OPERATIONS

DATE RECEIVED 5-19-78 LAB NO. 119

SAMPLING DATA

GEOGRAPHICAL ORIGIN Phelps-Dodge / Douglas
SAMPLING LOCATION Outlet
SAMPLE TYPE modified method 5
SAMPLE NUMBERS DO-As-3
SAMPLING METHOD [illegible] sampling train
SAMPLED BY Bob Jongleux DATE SAMPLED 5-5-78
CONTAINER TYPE SAMPLE VOLUME
SAMPLE MATRIX

LOG REMARKS fractions one and two consumed in previous analysis

ANALYTICAL DATA

DATE REPORT DUE

SAMPLE NO.	PARAMETERS	ANALYTICAL METHOD	VALUES	DATE OF ANALYSIS	REMARKS
-3	Pb	Atomic Absorption	1 μg	4-27-79	

SAMPLE INFORMATION
FOR LABORATORY OPERATIONS

DATE RECEIVED 5-19-78 LAB NO. 120

SAMPLING DATA

GEOGRAPHICAL ORIGIN Phelps-Dodge / Ajo
SAMPLING LOCATION converter
SAMPLE TYPE modified method 5
SAMPLE NUMBERS FC-Ag-1
SAMPLING METHOD EPA Absorption train
SAMPLED BY Bob Sanglaux DATE SAMPLED 5-10-78
CONTAINER TYPE SAMPLE VOLUME
SAMPLE MATRIX

LOG REMARKS

ANALYTICAL DATA

DATE REPORT DUE

SAMPLE NO.	PARAMETERS	ANALYTICAL METHOD	VALUES	DATE OF ANALYSIS	REMARKS
-1	Pb	Atomic Absorption	2--0 µg	4-27-79	
-2	↓	↓	3850 µg	"	
-3	↓	↓	3 µg	"	

SAMPLE INFORMATION
FOR LABORATORY OPERATIONS

DATE RECEIVED 5-19-78 LAB NO. 121

SAMPLING DATA

GEOGRAPHICAL ORIGIN Phelps-Dodge / Ajo
SAMPLING LOCATION Converter
SAMPLE TYPE mod. method 5
SAMPLE NUMBERS AC-As-2
SAMPLING METHOD EPA As sampling train
SAMPLED BY Bob Jongleux DATE SAMPLED 5-11-78
CONTAINER TYPE SAMPLE VOLUME
SAMPLE MATRIX

LOG REMARKS

ANALYTICAL DATA

DATE REPORT DUE

SAMPLE NO.	PARAMETERS	ANALYTICAL METHOD	VALUES	DATE OF ANALYSIS	REMARKS
-1	Pb	Atomic Absorption	2030 µg	4-27-79	
-2	↓	↓	3250 µg	"	
-3	↓	↓	1 µg	"	

SAMPLE INFORMATION
FOR LABORATORY OPERATIONS

DATE RECEIVED 5-19-78 LAB NO. 122

SAMPLING DATA

GEOGRAPHICAL ORIGIN Phelps/Dodge / Ajo
SAMPLING LOCATION Converter
SAMPLE TYPE mod. method 5
SAMPLE NUMBERS AC-As-3
SAMPLING METHOD EPA 1s sampling train
SAMPLED BY Bob Jonaleux DATE SAMPLED 5-12-78
CONTAINER TYPE SAMPLE VOLUME
SAMPLE MATRIX

LOG REMARKS

ANALYTICAL DATA

DATE REPORT DUE

SAMPLE NO.	PARAMETERS	ANALYTICAL METHOD	VALUES	DATE OF ANALYSIS	REMARKS
-1	Pb	Atomic Absorption	1820 µg	5-27-78	
-2	↓	↓	3780 µg	"	
-3	↓	↓	1 µg	"	

SAMPLE INFORMATION
FOR LABORATORY OPERATIONS

DATE RECEIVED 5-19-78 LAB NO. 123

SAMPLING DATA

GEOGRAPHICAL ORIGIN Phelps-Dodge / Ajo
SAMPLING LOCATION Converter
SAMPLE TYPE [illegible]
SAMPLE NUMBERS [illegible]-4
SAMPLING METHOD [illegible] vs sampling train
SAMPLED BY Rob Jonglaux DATE SAMPLED 5-11-78
CONTAINER TYPE SAMPLE VOLUME
SAMPLE MATRIX

LOG REMARKS

ANALYTICAL DATA

DATE REPORT DUE

SAMPLE NO.	PARAMETERS	ANALYTICAL METHOD	VALUES	DATE OF ANALYSIS	REMARKS
-1	Pb	Atomic Absorption	1360 µg	4-27-79	
-2	↓	↓	2510 µg	"	
-3	↓	↓	1 µg	"	

SAMPLE INFORMATION
FOR LABORATORY OPERATIONS

DATE RECEIVED 5-19-78 LAB NO. 124

SAMPLING DATA

GEOGRAPHICAL ORIGIN Phelps-Dodge / Ajo
SAMPLING LOCATION Mate Tower
SAMPLE TYPE mod. method 5
SAMPLE NUMBERS AMT-As-1
SAMPLING METHOD [illegible] As sampling train
SAMPLED BY Bob Jongleux DATE SAMPLED 5-10-78
CONTAINER TYPE SAMPLE VOLUME
SAMPLE MATRIX

LOG REMARKS

ANALYTICAL DATA

DATE REPORT DUE

SAMPLE NO.	PARAMETERS	ANALYTICAL METHOD	VALUES	DATE OF ANALYSIS	REMARKS
-1	Pb	Atomic Absorption	1720 µg	4-27-79	
-2	↓	↓	178 µg	"	
-3	↓	↓	5 µg	"	

SAMPLE INFORMATION
FOR LABORATORY OPERATIONS

DATE RECEIVED 5-19-78 LAB NO. 125

SAMPLING DATA

GEOGRAPHICAL ORIGIN Phelps-Dodge / Ajo
SAMPLING LOCATION [illegible] Tailing
SAMPLE TYPE mod. [illegible] 5
SAMPLE NUMBERS [illegible] As-2
SAMPLING METHOD EPA #5 sampling train
SAMPLED BY Bob Jongleux DATE SAMPLED 5-11-78
CONTAINER TYPE SAMPLE VOLUME
SAMPLE MATRIX

LOG REMARKS

ANALYTICAL DATA

DATE REPORT DUE

SAMPLE NO.	PARAMETERS	ANALYTICAL METHOD	VALUES	DATE OF ANALYSIS	REMARKS
-1	Pb	Atomic Absorption	1900 µg	4-27-79	
-2	↓	↓	272 µg	"	
-3	↓	↓	1 µg	"	

SAMPLE INFORMATION
FOR LABORATORY OPERATIONS

DATE RECEIVED 5-19-78 LAB NO. 127

SAMPLING DATA

GEOGRAPHICAL ORIGIN Phelps-Dodge / Douglas
SAMPLING LOCATION Inlet
SAMPLE TYPE mod. method 5
SAMPLE NUMBERS DT-[illegible]-1
SAMPLING METHOD EPA As sampling train
SAMPLED BY Bob Jongleux DATE SAMPLED 5-3-78
CONTAINER TYPE SAMPLE VOLUME
SAMPLE MATRIX

LOG REMARKS fraction 1 consumed in analysis

ANALYTICAL DATA

DATE REPORT DUE

SAMPLE NO.	PARAMETERS	ANALYTICAL METHOD	VALUES	DATE OF ANALYSIS	REMARKS
-2	Pb	Atomic Absorption	48 µg	4-27-79	
-3	↓	↓	3 µg	"	

SAMPLE INFORMATION
FOR LABORATORY OPERATIONS

DATE RECEIVED 5-19-78 LAB NO. 128

SAMPLING DATA

GEOGRAPHICAL ORIGIN Phelps-Dodge / Douglas
SAMPLING LOCATION Inlet
SAMPLE TYPE M.A. method 5
SAMPLE NUMBERS DI-As-2
SAMPLING METHOD EPA As sampling train
SAMPLED BY Bob Tongleux DATE SAMPLED 5-4-78
CONTAINER TYPE SAMPLE VOLUME
SAMPLE MATRIX

LOG REMARKS fraction 1 consumed in previous analysis
fraction 3 lost in storage

ANALYTICAL DATA

DATE REPORT DUE

SAMPLE NO.	PARAMETERS	ANALYTICAL METHOD	VALUES	DATE OF ANALYSIS	REMARKS
-2	Pb	Atomic Absorption	948 µg	4-27-79	

SAMPLE INFORMATION
FOR LABORATORY OPERATIONS

DATE RECEIVED 5-19-78 LAB NO. 129

SAMPLING DATA

GEOGRAPHICAL ORIGIN Phelps-Dodge / Douglas
SAMPLING LOCATION Inlet
SAMPLE TYPE mod. method 5
SAMPLE NUMBERS DI-As-3
SAMPLING METHOD EPA As sampling train
SAMPLED BY Bob Jongleux DATE SAMPLED 5-5-78
CONTAINER TYPE SAMPLE VOLUME
SAMPLE MATRIX

LOG REMARKS fraction 1 consumed in previous analysis

ANALYTICAL DATA

DATE REPORT DUE

SAMPLE NO.	PARAMETERS	ANALYTICAL METHOD	VALUES	DATE OF ANALYSIS	REMARKS
-2	Pb	Atomic Absorption	52 µg	4-27-79	
-3	"	"	2 µg	4-27-79	

SAMPLE INFORMATION
FOR LABORATORY OPERATIONS

DATE RECEIVED 6-21-78 LAB NO. 163

SAMPLING DATA

GEOGRAPHICAL ORIGIN Phelps-Dodge - Ajo
SAMPLING LOCATION Outlet to ESDV
SAMPLE TYPE modified method 5
SAMPLE NUMBERS A-ESD-As-1
SAMPLING METHOD EPA As sampling train
SAMPLED BY Tongleux DATE SAMPLED 6-13-78
CONTAINER TYPE SAMPLE VOLUME
SAMPLE MATRIX

LOG REMARKS fractions 1 and 4 consumed in previous analysis

ANALYTICAL DATA

DATE REPORT DUE

SAMPLE NO.	PARAMETERS	ANALYTICAL METHOD	VALUES	DATE OF ANALYSIS	REMARKS
-2	Pb	Atomic Absorption	1350 µg	4-27-79	Probe rinse
-3	"	"	3 µg	"	imp 1,2

SAMPLE INFORMATION
FOR LABORATORY OPERATIONS

DATE RECEIVED 5-19-78 LAB NO. 126

SAMPLING DATA

GEOGRAPHICAL ORIGIN Phelps-Dodge / Ajo
SAMPLING LOCATION Matte Tapping
SAMPLE TYPE mod. method 5
SAMPLE NUMBERS AMT-As-3
SAMPLING METHOD EPA Hi sampling train
SAMPLED BY Bob Jonglaux DATE SAMPLED 5-12-78
CONTAINER TYPE SAMPLE VOLUME
SAMPLE MATRIX

LOG REMARKS

ANALYTICAL DATA

DATE REPORT DUE

SAMPLE NO.	PARAMETERS	ANALYTICAL METHOD	VALUES	DATE OF ANALYSIS	REMARKS
-1	Pb	Atomic Absorption	630 µg	4-27-79	
-2	↓	↓	230 µg	"	
-3	↓	↓	3 µg	"	

SAMPLE INFORMATION
FOR LABORATORY OPERATIONS

DATE RECEIVED 6-21-78 LAB NO. 164

SAMPLING DATA

GEOGRAPHICAL ORIGIN Phelps-Dodge Ajo
SAMPLING LOCATION Acid plant outlet
SAMPLE TYPE Mod. method 5
SAMPLE NUMBERS A - AO-As-1
SAMPLING METHOD
SAMPLED BY Jongleux DATE SAMPLED 6-13-78
CONTAINER TYPE SAMPLE VOLUME
SAMPLE MATRIX

LOG REMARKS fractions 1 and 4 consumed in previous analysis

ANALYTICAL DATA

DATE REPORT DUE

SAMPLE NO.	PARAMETERS	ANALYTICAL METHOD	VALUES	DATE OF ANALYSIS	REMARKS
-2	Pb	Atomic Absorption	80 µg	7-27-79	
-3	"	"	1 µg	"	

SAMPLE INFORMATION
FOR LABORATORY OPERATIONS

DATE RECEIVED 6-21-78 LAB NO. 165

SAMPLING DATA

GEOGRAPHICAL ORIGIN Phelps-Dodge, Ajo
SAMPLING LOCATION Inlet
SAMPLE TYPE
SAMPLE NUMBERS F-I-I-As-1 (north)
SAMPLING METHOD
SAMPLED BY Tongleyx DATE SAMPLED 6-13-78
CONTAINER TYPE SAMPLE VOLUME
SAMPLE MATRIX

LOG REMARKS Fractions 1 and 4 consumed in previous analysis

ANALYTICAL DATA

DATE REPORT DUE

SAMPLE NO.	PARAMETERS	ANALYTICAL METHOD	VALUES	DATE OF ANALYSIS	REMARKS
-2	Pb	Atomic Absorption	2000 µg	4-27-79	
-3	"		1 µg	"	

SAMPLE INFORMATION
FOR LABORATORY OPERATIONS

DATE RECEIVED 6-21-78 LAB NO. 166

SAMPLING DATA

GEOGRAPHICAL ORIGIN Phelps-Dodge-Ajo
SAMPLING LOCATION Acid Plant Inlet
SAMPLE TYPE
SAMPLE NUMBERS AI-II-As-1 (south)
SAMPLING METHOD
SAMPLED BY Jongleux DATE SAMPLED 6-13-78
CONTAINER TYPE SAMPLE VOLUME
SAMPLE MATRIX

LOG REMARKS fractions 1 and 4 consumed in previous analysis

ANALYTICAL DATA

DATE REPORT DUE

SAMPLE NO.	PARAMETERS	ANALYTICAL METHOD	VALUES	DATE OF ANALYSIS	REMARKS
-2	Pb	atomic Absorption	2400 µg	4-27-79	
-3	"	"	500 µg	"	

SAMPLE INFORMATION
FOR LABORATORY OPERATIONS

DATE RECEIVED 6-21-78 LAB NO. 167

SAMPLING DATA

GEOGRAPHICAL ORIGIN Phelps-Dodge, Ajo
SAMPLING LOCATION [illegible] to ISP
SAMPLE TYPE
SAMPLE NUMBERS A-EPO-As-2
SAMPLING METHOD
SAMPLED BY Jonaleux DATE SAMPLED 6-14-78
CONTAINER TYPE SAMPLE VOLUME
SAMPLE MATRIX

LOG REMARKS fractions 1 and 4 consumed in previous analysis

ANALYTICAL DATA

DATE REPORT DUE

SAMPLE NO.	PARAMETERS	ANALYTICAL METHOD	VALUES	DATE OF ANALYSIS	REMARKS
-2	Pb	Atomic Absorption	2050 µg	4-27-79	
-3	"	"	1 µg	"	

SAMPLE INFORMATION
FOR LABORATORY OPERATIONS

DATE RECEIVED 6-21-78 LAB NO. 168

SAMPLING DATA

GEOGRAPHICAL ORIGIN Phelps-Dodge, Ajo
SAMPLING LOCATION Acid [illegible]
SAMPLE TYPE
SAMPLE NUMBERS A-AO-As-2
SAMPLING METHOD
SAMPLED BY Jongleux DATE SAMPLED 6-14-78
CONTAINER TYPE SAMPLE VOLUME
SAMPLE MATRIX

LOG REMARKS fractions 1 and 4 consumed in previous analysis

ANALYTICAL DATA

DATE REPORT DUE

SAMPLE NO.	PARAMETERS	ANALYTICAL METHOD	VALUES	DATE OF ANALYSIS	REMARKS
-2	Pb	Atomic Absorption	214 µg	7-27-79	
-3	"	"	< 1 µg	7-27-79	

SAMPLE INFORMATION
FOR LABORATORY OPERATIONS

DATE RECEIVED 6-21-78 LAB NO. 169

SAMPLING DATA

GEOGRAPHICAL ORIGIN Phelps-Dodge, Ajo
SAMPLING LOCATION Acid Tailings
SAMPLE TYPE
SAMPLE NUMBERS AI-II-As-2
SAMPLING METHOD
SAMPLED BY Jongleux DATE SAMPLED 6-14-78
CONTAINER TYPE SAMPLE VOLUME
SAMPLE MATRIX

LOG REMARKS fractions 1 and 4 consumed in previous analysis

ANALYTICAL DATA

DATE REPORT DUE

SAMPLE NO.	PARAMETERS	ANALYTICAL METHOD	VALUES	DATE OF ANALYSIS	REMARKS
-2	Pb	Atomic Absorption	8450 µg	4-27-77	
-3	"	"	3 µg	"	

SAMPLE INFORMATION
FOR LABORATORY OPERATIONS

DATE RECEIVED 6-21-78 LAB NO. 170

SAMPLING DATA

GEOGRAPHICAL ORIGIN Phelps-Dodge, Ajo
SAMPLING LOCATION [illegible] outlet
SAMPLE TYPE
SAMPLE NUMBERS [illegible]-As-3
SAMPLING METHOD
SAMPLED BY Jongleux DATE SAMPLED 6-15-78
CONTAINER TYPE SAMPLE VOLUME
SAMPLE MATRIX

LOG REMARKS fractions 1 and 4 consumed in previous analysis

ANALYTICAL DATA

DATE REPORT DUE

SAMPLE NO.	PARAMETERS	ANALYTICAL METHOD	VALUES	DATE OF ANALYSIS	REMARKS
-2	Pb	Atomic Absorption	1070 µg	4-27-78	
-3	"	"	<1 µg	"	

SAMPLE INFORMATION
FOR LABORATORY OPERATIONS

DATE RECEIVED 6-21-78 LAB NO. 171

SAMPLING DATA

GEOGRAPHICAL ORIGIN Phelps-Dodge, Ajo
SAMPLING LOCATION Acid outlet
SAMPLE TYPE
SAMPLE NUMBERS A- AO- As-3
SAMPLING METHOD
SAMPLED BY Jongleux DATE SAMPLED 6-15-78
CONTAINER TYPE SAMPLE VOLUME
SAMPLE MATRIX

LOG REMARKS fractions 1 and 4 consumed in previous analysis

ANALYTICAL DATA

DATE REPORT DUE

SAMPLE NO.	PARAMETERS	ANALYTICAL METHOD	VALUES	DATE OF ANALYSIS	REMARKS
-2	Pb	Atomic Absorption	76.1 µg	4-27-79	
-3	"	"	2 µg	"	

SAMPLE INFORMATION
FOR LABORATORY OPERATIONS

DATE RECEIVED 6-21-78 LAB NO. 172

SAMPLING DATA

GEOGRAPHICAL ORIGIN Phelps-Dodge, Ajo
SAMPLING LOCATION Acid Inlet (north)
SAMPLE TYPE
SAMPLE NUMBERS AI-I-As-3
SAMPLING METHOD
SAMPLED BY Jongleux DATE SAMPLED 6-15-78
CONTAINER TYPE SAMPLE VOLUME
SAMPLE MATRIX

LOG REMARKS fractions 1 and 4

ANALYTICAL DATA

DATE REPORT DUE

SAMPLE NO.	PARAMETERS	ANALYTICAL METHOD	VALUES	DATE OF ANALYSIS	REMARKS
-2	Pb	Atomic Absorption	154 µg	4-27-79	
-3	"	"	2 µg	"	

SAMPLE INFORMATION
FOR LABORATORY OPERATIONS

DATE RECEIVED 6-21-78 LAB NO. 173

SAMPLING DATA

GEOGRAPHICAL ORIGIN Phelps-Dodge, Ariz
SAMPLING LOCATION Acid Inlet (south)
SAMPLE TYPE
SAMPLE NUMBERS AI-II-As-3
SAMPLING METHOD
SAMPLED BY Jongleux DATE SAMPLED 6-15-78
CONTAINER TYPE SAMPLE VOLUME
SAMPLE MATRIX

LOG REMARKS fractions 1 and 4 consumed by previous

ANALYTICAL DATA

DATE REPORT DUE

SAMPLE NO.	PARAMETERS	ANALYTICAL METHOD	VALUES	DATE OF ANALYSIS	REMARKS
-2	Pb	Atomic Absorption	3780 µg	4-27-77	
-3	"	"	1 µg	4-27-79	

SAMPLE INFORMATION
FOR LABORATORY OPERATIONS

DATE RECEIVED 6-21-78 LAB NO. 174

SAMPLING DATA

GEOGRAPHICAL ORIGIN Phelps-Dodge, Ajo
SAMPLING LOCATION pump tank
SAMPLE TYPE liquid acid - H_2SO_4
SAMPLE NUMBERS
SAMPLING METHOD grab
SAMPLED BY P-D personnel DATE SAMPLED 6-13, 14, 15-78
CONTAINER TYPE SAMPLE VOLUME
SAMPLE MATRIX 93% H_2SO_4

LOG REMARKS -1 => 6-13 ; -2 => 6-14 , -3 => 6.15

ANALYTICAL DATA

DATE REPORT DUE

SAMPLE NO.	PARAMETERS	ANALYTICAL METHOD	VALUES	DATE OF ANALYSIS	REMARKS
-1	Pb	Atomic Absorption	0.011 µg/ml	4-27-79	
-2	"	"	0.013 µg/ml	"	
-3	"	"	0.081 µg/ml	"	

SAMPLE INFORMATION
FOR LABORATORY OPERATIONS

DATE RECEIVED 6-21-78 LAB NO. 175

SAMPLING DATA

GEOGRAPHICAL ORIGIN Phelps-Dodge, Ajo
SAMPLING LOCATION Acid Plant Purge
SAMPLE TYPE Water
SAMPLE NUMBERS
SAMPLING METHOD grab
SAMPLED BY D-[illegible] personnel DATE SAMPLED 6-13, 14, 15-78
CONTAINER TYPE SAMPLE VOLUME
SAMPLE MATRIX

LOG REMARKS -1 ⇒ 6-13 / -2 ⇒ 6-14 / -3 ⇒ 6-15

ANALYTICAL DATA

DATE REPORT DUE

SAMPLE NO.	PARAMETERS	ANALYTICAL METHOD	VALUES	DATE OF ANALYSIS	REMARKS
-1	Pb	Atomic Absorption	27.5 µg/ml	4-27-78	
-2	↓	↓	34.3 µg/ml	"	
-3	↓	↓	14.5 µg/ml	"	

SAMPLE INFORMATION
FOR LABORATORY OPERATIONS

DATE RECEIVED 6-21-78 LAB NO. 176

SAMPLING DATA

GEOGRAPHICAL ORIGIN Phelps-Dodge, Ajo
SAMPLING LOCATION conv. precipitator
SAMPLE TYPE process
SAMPLE NUMBERS
SAMPLING METHOD grab
SAMPLED BY P-D personnel DATE SAMPLED 6-13,14,15-78
CONTAINER TYPE SAMPLE VOLUME
SAMPLE MATRIX

LOG REMARKS

ANALYTICAL DATA

DATE REPORT DUE

SAMPLE NO.	PARAMETERS	ANALYTICAL METHOD	VALUES	DATE OF ANALYSIS	REMARKS
-1	Pb	Atomic Absorption	0.581%	4-27-79	conv. precipitator 6-13-78
-2	↓	↓	0.503%	"	conv. precipitator 6-14-78
-3	↓	↓	0.560%	"	conv. precipitator 6-15-78

SAMPLE INFORMATION
FOR LABORATORY OPERATIONS

DATE RECEIVED 6-21-78 LAB NO. 177

SAMPLING DATA

GEOGRAPHICAL ORIGIN Phelps-Dodge, Ajo
SAMPLING LOCATION Anode
SAMPLE TYPE Copper
SAMPLE NUMBERS
SAMPLING METHOD grab
SAMPLED BY D. D. Personnel DATE SAMPLED 6-14,15,16-78
CONTAINER TYPE SAMPLE VOLUME
SAMPLE MATRIX

LOG REMARKS

ANALYTICAL DATA

DATE REPORT DUE

SAMPLE NO.	PARAMETERS	ANALYTICAL METHOD	VALUES	DATE OF ANALYSIS	REMARKS
-1	Pb	Atomic Absorption	0.0011%	4-27-79	Cu anode 6-14-78
-2	↓	↓	0.0021%	"	cu anode 6-15-78
-3	↓	↓	0.0010%	"	Cu anode 6-16 78

SAMPLE INFORMATION
FOR LABORATORY OPERATIONS

DATE RECEIVED 6-21-78 LAB NO. 178

SAMPLING DATA

GEOGRAPHICAL ORIGIN Phelps-Dodge, Ajo
SAMPLING LOCATION conv. slag
SAMPLE TYPE process
SAMPLE NUMBERS
SAMPLING METHOD grab
SAMPLED BY P-D personnel DATE SAMPLED 6-13, 14, 15-78
CONTAINER TYPE SAMPLE VOLUME
SAMPLE MATRIX

LOG REMARKS

ANALYTICAL DATA

DATE REPORT DUE

SAMPLE NO.	PARAMETERS	ANALYTICAL METHOD	VALUES	DATE OF ANALYSIS	REMARKS
-1	Pb	Atomic Absorption	0.0332%	4-27-79	conv. Slag 6-13-78
-2	↓	↓	0.0519%	"	conv. slag 6-14-78
-3	↓	↓	0.0391%	"	conv slag 6-15-78

SAMPLE INFORMATION
FOR LABORATORY OPERATIONS

DATE RECEIVED 6-21-78 LAB NO. 179

SAMPLING DATA

GEOGRAPHICAL ORIGIN Phelps-Dodge - Ajo
SAMPLING LOCATION Matte
SAMPLE TYPE process
SAMPLE NUMBERS
SAMPLING METHOD grab
SAMPLED BY P-D personnel DATE SAMPLED 6-13,14,15-78
CONTAINER TYPE SAMPLE VOLUME
SAMPLE MATRIX

LOG REMARKS

ANALYTICAL DATA

DATE REPORT DUE

SAMPLE NO.	PARAMETERS	ANALYTICAL METHOD	VALUES	DATE OF ANALYSIS	REMARKS
-1	Pb	Atomic Absorption	0.0447%	4-27-[illegible]	Matte 6-13-78
-2	↓	↓	0.0418%	"	Matte 6-14-78
-3	↓	↓	0.0447%	"	Matte 6-15-78

SAMPLE INFORMATION
FOR LABORATORY OPERATIONS

DATE RECEIVED 7-27-78 LAB NO. 214

SAMPLING DATA

GEOGRAPHICAL ORIGIN Phelps-Dodge, Playas, N.M.
SAMPLING LOCATION
SAMPLE TYPE process
SAMPLE NUMBERS
SAMPLING METHOD grab
SAMPLED BY P-D personnel DATE SAMPLED 7-25, 26-78
CONTAINER TYPE SAMPLE VOLUME
SAMPLE MATRIX

LOG REMARKS

ANALYTICAL DATA

DATE REPORT DUE

SAMPLE NO.	PARAMETERS	ANALYTICAL METHOD	VALUES	DATE OF ANALYSIS	REMARKS
-1	Pb	Atomic Absorption	0.140%	4-27-79	Flash Furnace Feed
-2			0.052%		Flash Furnace Slag
-3			0.177%		Flash Furnace Matte
-4			0.184%		Electric Furnace Matte
-5			0.17[illegible]%		Electric Furnace Slag
-6			0.073%		converter blister
-7			0.047%		converter slag

SAMPLE INFORMATION
FOR LABORATORY OPERATIONS

DATE RECEIVED 7-27-78 LAB NO. 215

SAMPLING DATA

GEOGRAPHICAL ORIGIN Phelps-Dodge, Playas N.M.
SAMPLING LOCATION HC
SAMPLE TYPE
SAMPLE NUMBERS HC-As-1
SAMPLING METHOD
SAMPLED BY Jongleux DATE SAMPLED 7-25-78
CONTAINER TYPE SAMPLE VOLUME
SAMPLE MATRIX

LOG REMARKS fraction 1 consumed in previous analysis

ANALYTICAL DATA

DATE REPORT DUE

SAMPLE NO.	PARAMETERS	ANALYTICAL METHOD	VALUES	DATE OF ANALYSIS	REMARKS
-2	Pb	Atomic Absorption	5?0 µg	4-27-79	probe rinse
-3	"	"	230 µg	"	imp 1,2

SAMPLE INFORMATION
FOR LABORATORY OPERATIONS

DATE RECEIVED 7-27-78 LAB NO. 216

SAMPLING DATA

GEOGRAPHICAL ORIGIN Phelps Dodge, Playas N.M.
SAMPLING LOCATION Conv.
SAMPLE TYPE
SAMPLE NUMBERS HC-As-2
SAMPLING METHOD
SAMPLED BY Jongleux DATE SAMPLED 7-26-78
CONTAINER TYPE SAMPLE VOLUME
SAMPLE MATRIX

LOG REMARKS

ANALYTICAL DATA

DATE REPORT DUE

SAMPLE NO.	PARAMETERS	ANALYTICAL METHOD	VALUES	DATE OF ANALYSIS	REMARKS
-2	Pb	Atomic Absorption	3040 µg	4-27-79	proce rinse
-3	"	"	645 µg	"	imp 1,2

SAMPLE INFORMATION
FOR LABORATORY OPERATIONS

DATE RECEIVED 7-27-78 LAB NO. 217

SAMPLING DATA

GEOGRAPHICAL ORIGIN Phelps-Dodge, Playas N.M.
SAMPLING LOCATION conv.
SAMPLE TYPE
SAMPLE NUMBERS HC-As-3
SAMPLING METHOD
SAMPLED BY Tongleux DATE SAMPLED 7-26-78
CONTAINER TYPE SAMPLE VOLUME
SAMPLE MATRIX

LOG REMARKS

ANALYTICAL DATA

DATE REPORT DUE

SAMPLE NO.	PARAMETERS	ANALYTICAL METHOD	VALUES	DATE OF ANALYSIS	REMARKS
-2	Pb	Atomic Absorption	3550 µg	4-27-79	proce rinse
-3	"	"	8 µg	"	imp 1,2

SAMPLE INFORMATION
FOR LABORATORY OPERATIONS

DATE RECEIVED 9-29-78 LAB NO. 268

SAMPLING DATA

GEOGRAPHICAL ORIGIN Asarco - Tacoma, Wash.
SAMPLING LOCATION
SAMPLE TYPE process
SAMPLE NUMBERS
SAMPLING METHOD grab
SAMPLED BY Asarco personnel DATE SAMPLED 9-19, 20, 21-78
CONTAINER TYPE SAMPLE VOLUME
SAMPLE MATRIX

LOG REMARKS

ANALYTICAL DATA

DATE REPORT DUE

SAMPLE NO.	PARAMETERS	ANALYTICAL METHOD	VALUES	DATE OF ANALYSIS	REMARKS
-1	Pb	Atomic Absorption	0.23%	4-27-79	reverb slag #2 9-19-78
-2	↓	↓	0.270%	↓	reverb slag #2 9-20-78
-3	↓	↓	0.38%	↓	reverb slag #2 9-21-78

SAMPLE INFORMATION
FOR LABORATORY OPERATIONS

DATE RECEIVED 9-29-78 LAB NO. 269

SAMPLING DATA

GEOGRAPHICAL ORIGIN Asarco - Tacoma
SAMPLING LOCATION
SAMPLE TYPE process
SAMPLE NUMBERS
SAMPLING METHOD grab
SAMPLED BY Asarco personnel DATE SAMPLED 9-19 → 23-78
CONTAINER TYPE SAMPLE VOLUME
SAMPLE MATRIX

LOG REMARKS

ANALYTICAL DATA

DATE REPORT DUE

SAMPLE NO.	PARAMETERS	ANALYTICAL METHOD	VALUES	DATE OF ANALYSIS	REMARKS
-1	Pb	Atomic Absorption	[illegible]	[illegible]	Slag pot #1 9-19-78
-2	↓	↓	0.157%	↓	Slag pot #2 Furnace 9-20-78
-3	↓	↓	0.435%	↓	Slag pot #1 Dump 9-20-78
-4	↓	↓	0.266%	↓	Slag pot #2 Dump 9-21-78
-5	↓	↓	0.778%	↓	Slag pot #3 9-21-78
-6	↓	↓	0.705%	↓	Slag pot #3 top 9-22-78
-7	↓	↓	0.835%	↓	Slag pot #3 dump 9-22-78
-8	↓	↓	0.479%	↓	Slag pot #4 9-22-78
-9	↓	↓	0.784%	↓	Slag pot #3 Bottom 9-22-78
-10	↓	↓	0.483%	↓	Slag pot #4 dump 9-23-78

SAMPLE INFORMATION
FOR LABORATORY OPERATIONS

DATE RECEIVED 9-29-78 LAB NO. 270

SAMPLING DATA

GEOGRAPHICAL ORIGIN Asarco - Tacoma
SAMPLING LOCATION process
SAMPLE TYPE
SAMPLE NUMBERS
SAMPLING METHOD grab
SAMPLED BY Asarco · Personnel DATE SAMPLED 9-25-78
CONTAINER TYPE SAMPLE VOLUME
SAMPLE MATRIX

LOG REMARKS

ANALYTICAL DATA

DATE REPORT DUE

SAMPLE NO.	PARAMETERS	ANALYTICAL METHOD	VALUES	DATE OF ANALYSIS	REMARKS
270	Pb	Atomic Absorption	0.020%	4-27-79	mexican Arsenic 9-25-78

SAMPLE INFORMATION
FOR LABORATORY OPERATIONS

DATE RECEIVED 9-29-78 LAB NO. 271

SAMPLING DATA

GEOGRAPHICAL ORIGIN Asarco, Tacoma
SAMPLING LOCATION
SAMPLE TYPE process
SAMPLE NUMBERS
SAMPLING METHOD grab
SAMPLED BY Asarco personnel DATE SAMPLED 9-24, 25-78
CONTAINER TYPE SAMPLE VOLUME
SAMPLE MATRIX

LOG REMARKS

ANALYTICAL DATA

DATE REPORT DUE

SAMPLE NO.	PARAMETERS	ANALYTICAL METHOD	VALUES	DATE OF ANALYSIS	REMARKS
-1	Pb	Atomic Absorption	0.165%	4-27-79	Godfry calcine charge 9-24-78
-2	↓	↓	0.830%	↓	" 9-25-78
-3	↓	↓	0.260%	↓	" 9-25-78
-4	↓	↓	0.220%	↓	" 9-24-78.

SAMPLE INFORMATION
FOR LABORATORY OPERATIONS

DATE RECEIVED 5-19-78 LAB NO. 121

SAMPLING DATA

GEOGRAPHICAL ORIGIN Phelps-Dodge / Ajo
SAMPLING LOCATION Converter
SAMPLE TYPE [illegible] 5
SAMPLE NUMBERS AC-As-2
SAMPLING METHOD EPA As sampling train
SAMPLED BY Bob Jongeux DATE SAMPLED 5-11-78
CONTAINER TYPE SAMPLE VOLUME
SAMPLE MATRIX

LOG REMARKS

ANALYTICAL DATA

DATE REPORT DUE

SAMPLE NO.	PARAMETERS	ANALYTICAL METHOD	VALUES	DATE OF ANALYSIS	REMARKS
-1	Pb	Atomic Absorption	2030 µg	4-27-79	
-2	↓	↓	3250 µg	"	
-3	↓	↓	1 µg	"	

SAMPLE INFORMATION
FOR LABORATORY OPERATIONS

DATE RECEIVED 5-17-79 LAB NO. 122

SAMPLING DATA

GEOGRAPHICAL ORIGIN Phelps/Dodge / Ajo
SAMPLING LOCATION [illegible]
SAMPLE TYPE [illegible] 5
SAMPLE NUMBERS AC-As-3
SAMPLING METHOD [illegible] Sample train
SAMPLED BY Bob Jongeling DATE SAMPLED 5-12-78
CONTAINER TYPE SAMPLE VOLUME
SAMPLE MATRIX

LOG REMARKS

ANALYTICAL DATA

DATE REPORT DUE

SAMPLE NO.	PARAMETERS	ANALYTICAL METHOD	VALUES	DATE OF ANALYSIS	REMARKS
-1	Pb	Atomic Absorption	1870 µg	5-23-79	
-2	↓	↓	3700 µg	"	
-3	↓	↓	1 µg	"	

SAMPLE INFORMATION
FOR LABORATORY OPERATIONS

DATE RECEIVED 5-19-78 LAB NO. 123

SAMPLING DATA

GEOGRAPHICAL ORIGIN Phelps-Dodge / Ajo
SAMPLING LOCATION [illegible]
SAMPLE TYPE [illegible]
SAMPLE NUMBERS [illegible]
SAMPLING METHOD [illegible] sampling train
SAMPLED BY [illegible] DATE SAMPLED 5-11-78
CONTAINER TYPE SAMPLE VOLUME
SAMPLE MATRIX

LOG REMARKS

ANALYTICAL DATA

DATE REPORT DUE

SAMPLE NO.	PARAMETERS	ANALYTICAL METHOD	VALUES	DATE OF ANALYSIS	REMARKS
-1	Pb	Atomic Absorption	1360 µg	4-27-79	
-2	↓	↓	2510 µg	"	
-3	↓	↓	1 µg	"	

SAMPLE INFORMATION
FOR LABORATORY OPERATIONS

DATE RECEIVED 5-12-78 LAB NO. 124

SAMPLING DATA

GEOGRAPHICAL ORIGIN Phelps-Dodge / Ajo
SAMPLING LOCATION [illegible]
SAMPLE TYPE [illegible]
SAMPLE NUMBERS [illegible]-1
SAMPLING METHOD [illegible] S sampling [illegible]
SAMPLED BY Bob Gerlaux DATE SAMPLED 5-10-78
CONTAINER TYPE SAMPLE VOLUME
SAMPLE MATRIX

LOG REMARKS

ANALYTICAL DATA

DATE REPORT DUE

SAMPLE NO.	PARAMETERS	ANALYTICAL METHOD	VALUES	DATE OF ANALYSIS	REMARKS
-1	Pb	Atomic Absorption	1720 µg	4-22-79	
-2	↓	↓	178 µg	"	
-3	↓	↓	5 µg	"	

SAMPLE INFORMATION
FOR LABORATORY OPERATIONS

DATE RECEIVED 5-19-79 LAB NO. 125

SAMPLING DATA

GEOGRAPHICAL ORIGIN Phelps Dodge / Ajo
SAMPLING LOCATION [illegible]
SAMPLE TYPE [illegible] 5
SAMPLE NUMBERS [illegible] -2
SAMPLING METHOD EPA [illegible] train
SAMPLED BY [illegible] Jordan DATE SAMPLED 5-11-79
CONTAINER TYPE SAMPLE VOLUME
SAMPLE MATRIX

LOG REMARKS

ANALYTICAL DATA

DATE REPORT DUE

SAMPLE NO.	PARAMETERS	ANALYTICAL METHOD	VALUES	DATE OF ANALYSIS	REMARKS
-1	Pb	Atomic Absorption	1900 µg	7-27-79	
-2	↓	↓	272 µg	"	
-3	↓	↓	1 µg	"	

SAMPLE INFORMATION
FOR LABORATORY OPERATIONS

DATE RECEIVED 5-19-78 LAB NO. 126

SAMPLING DATA

GEOGRAPHICAL ORIGIN Phelps-Dodge / Ajo
SAMPLING LOCATION Matte Topping
SAMPLE TYPE mod. [illegible] 5
SAMPLE NUMBERS [illegible]
SAMPLING METHOD [illegible] sampling train
SAMPLED BY Bob [illegible] DATE SAMPLED 5-10-78
CONTAINER TYPE SAMPLE VOLUME
SAMPLE MATRIX

LOG REMARKS

ANALYTICAL DATA

DATE REPORT DUE

SAMPLE NO.	PARAMETERS	ANALYTICAL METHOD	VALUES	DATE OF ANALYSIS	REMARKS
-1	Pb	Atomic Absorption	1600µg	4-27-79	
-2	↓	↓	230µg	"	
-3	↓	↓	3µg	"	

SAMPLE INFORMATION
FOR LABORATORY OPERATIONS

DATE RECEIVED 5-19-78 LAB NO. 127

SAMPLING DATA

GEOGRAPHICAL ORIGIN [illegible] / Douglas
SAMPLING LOCATION [illegible]
SAMPLE TYPE [illegible] 5
SAMPLE NUMBERS [illegible]
SAMPLING METHOD [illegible] as sampling train
SAMPLED BY Bob Jongkox DATE SAMPLED 5-3-78
CONTAINER TYPE SAMPLE VOLUME
SAMPLE MATRIX

LOG REMARKS fraction 1 consumed in analysis

ANALYTICAL DATA

DATE REPORT DUE

SAMPLE NO.	PARAMETERS	ANALYTICAL METHOD	VALUES	DATE OF ANALYSIS	REMARKS
-2	Pb	Atomic Absorption	48 µg	4-27-79	
-3	↓	↓	3 µg	"	

SAMPLE INFORMATION
FOR LABORATORY OPERATIONS

DATE RECEIVED 5-19-78 LAB NO. 128

SAMPLING DATA

GEOGRAPHICAL ORIGIN Phelps-Dodge / Douglas
SAMPLING LOCATION [illegible]
SAMPLE TYPE [illegible] 5
SAMPLE NUMBERS D1-As-2
SAMPLING METHOD [illegible] sampling train
SAMPLED BY [illegible] DATE SAMPLED 5-4-78
CONTAINER TYPE SAMPLE VOLUME
SAMPLE MATRIX

LOG REMARKS fraction 1 consumed in previous analysis
fraction 3 lost in storage

ANALYTICAL DATA

DATE REPORT DUE

SAMPLE NO.	PARAMETERS	ANALYTICAL METHOD	VALUES	DATE OF ANALYSIS	REMARKS
-2	Pb	Atomic Absorption	948 µg	[illegible]	

SAMPLE INFORMATION
FOR LABORATORY OPERATIONS

DATE RECEIVED 5-19-78 LAB NO. 129

SAMPLING DATA .

GEOGRAPHICAL ORIGIN Phelps-Dodge / Douglas
SAMPLING LOCATION Inlet
SAMPLE TYPE mod. method 5
SAMPLE NUMBERS DI-1-3
SAMPLING METHOD [illegible] As sampling train
SAMPLED BY Bob Tonglerix DATE SAMPLED 5-5-78
CONTAINER TYPE SAMPLE VOLUME
SAMPLE MATRIX

LOG REMARKS fraction 1 consumed in previous analysis

ANALYTICAL DATA

DATE REPORT DUE

SAMPLE NO.	PARAMETERS	ANALYTICAL METHOD	VALUES	DATE OF ANALYSIS	REMARKS
-2	Pb	Atomic Absorption	52 µg	4-27-79	
-3	"	"	2 µg	4-27-79	

SAMPLE INFORMATION
FOR LABORATORY OPERATIONS

DATE RECEIVED 6-21-78 LAB NO. 163

SAMPLING DATA

GEOGRAPHICAL ORIGIN Phelps-Dodge - Ajo
SAMPLING LOCATION [illegible]
SAMPLE TYPE [illegible] method 5
SAMPLE NUMBERS [illegible]
SAMPLING METHOD [illegible] sampling [illegible]
SAMPLED BY [illegible] DATE SAMPLED [illegible]
CONTAINER TYPE SAMPLE VOLUME
SAMPLE MATRIX

LOG REMARKS fractions 1 and 4 consumed in previous analysis

ANALYTICAL DATA

DATE REPORT DUE

SAMPLE NO.	PARAMETERS	ANALYTICAL METHOD	VALUES	DATE OF ANALYSIS	REMARKS
-2	Pb	Atomic Absorption	1350 µg	4-[illegible]-79	Probe rinse
-3	"	"	3 µg		imp 1,2

SAMPLE INFORMATION
FOR LABORATORY OPERATIONS

DATE RECEIVED 6-21-78 LAB NO. 164

SAMPLING DATA

GEOGRAPHICAL ORIGIN Phelps-Dodge Ajo
SAMPLING LOCATION [illegible]
SAMPLE TYPE [illegible]
SAMPLE NUMBERS 1 - AO-AS-1
SAMPLING METHOD
SAMPLED BY Jongl-yx DATE SAMPLED 6-13-78
CONTAINER TYPE SAMPLE VOLUME
SAMPLE MATRIX

LOG REMARKS fractions 1 and 4 consumed in previous analysis

ANALYTICAL DATA

DATE REPORT DUE

SAMPLE NO.	PARAMETERS	ANALYTICAL METHOD	VALUES	DATE OF ANALYSIS	REMARKS
-2	Pb	Atomic Absorption	50 µg	7-27-79	
-3	"	"	1 µg	"	

SAMPLE INFORMATION
FOR LABORATORY OPERATIONS

DATE RECEIVED 6-21-78 LAB NO. 165

SAMPLING DATA

GEOGRAPHICAL ORIGIN Phelps-Dodge, Ariz
SAMPLING LOCATION [illegible]
SAMPLE TYPE
SAMPLE NUMBERS [illegible]-I-As-1 (north)
SAMPLING METHOD
SAMPLED BY [illegible] DATE SAMPLED 6-13-78
CONTAINER TYPE SAMPLE VOLUME
SAMPLE MATRIX

LOG REMARKS fractions 1 and 4 consumed in previous analysis

ANALYTICAL DATA

DATE REPORT DUE

SAMPLE NO.	PARAMETERS	ANALYTICAL METHOD	VALUES	DATE OF ANALYSIS	REMARKS
-2	Pb	Atomic Absorption	2000 µg	4-27-78	
-3	"		1 µg	"	

SAMPLE INFORMATION
FOR LABORATORY OPERATIONS

DATE RECEIVED 6-21-79 LAB NO. 166

SAMPLING DATA

GEOGRAPHICAL ORIGIN Prelos-Dalza-Aja
SAMPLING LOCATION Acid [illegible] Tr [illegible]
SAMPLE TYPE
SAMPLE NUMBERS AI-II-ds-1 (south)
SAMPLING METHOD
SAMPLED BY Jonaleux DATE SAMPLED 6-13-78
CONTAINER TYPE SAMPLE VOLUME
SAMPLE MATRIX

LOG REMARKS fractions 1 and 4 consumed in previous analysis

ANALYTICAL DATA

DATE REPORT DUE

SAMPLE NO.	PARAMETERS	ANALYTICAL METHOD	VALUES	DATE OF ANALYSIS	REMARKS
-2	Pb	atomic Absorption	2400 µg	4-27-79	
-3	"	"	500 µg	"	

SAMPLE INFORMATION
FOR LABORATORY OPERATIONS

DATE RECEIVED 6-21-78 LAB NO. 167

SAMPLING DATA

GEOGRAPHICAL ORIGIN Phelps-Dodge, Ajo
SAMPLING LOCATION [illegible] ISD
SAMPLE TYPE
SAMPLE NUMBERS A-EPO-As-2
SAMPLING METHOD
SAMPLED BY Jonelyx DATE SAMPLED 6-14-78
CONTAINER TYPE SAMPLE VOLUME
SAMPLE MATRIX

LOG REMARKS fractions 1 and 4 consumed in previous analysis

ANALYTICAL DATA

DATE REPORT DUE

SAMPLE NO.	PARAMETERS	ANALYTICAL METHOD	VALUES	DATE OF ANALYSIS	REMARKS
-2	Pb	Atomic Absorption	2050 µg	4-27-79	
-3	"	"	1 µg	"	

SAMPLE INFORMATION
FOR LABORATORY OPERATIONS

DATE RECEIVED 6-21-79 LAB NO. 168

SAMPLING DATA

GEOGRAPHICAL ORIGIN Phelps-Dodge, Ajo
SAMPLING LOCATION [illegible]
SAMPLE TYPE
SAMPLE NUMBERS A-AO-As-2
SAMPLING METHOD
SAMPLED BY Tanglewx DATE SAMPLED 6-14-78
CONTAINER TYPE SAMPLE VOLUME
SAMPLE MATRIX

LOG REMARKS fractions 1 and 4 consumed in previous analysis

ANALYTICAL DATA

DATE REPORT DUE

SAMPLE NO.	PARAMETERS	ANALYTICAL METHOD	VALUES	DATE OF ANALYSIS	REMARKS
-2	Pb	Atomic Absorption	214 µg	[illegible]	
-3	"	"	<1 µg	[illegible]	

SAMPLE INFORMATION
FOR LABORATORY OPERATIONS

DATE RECEIVED 6-21-78 LAB NO. 169

SAMPLING DATA

GEOGRAPHICAL ORIGIN Phelps-Dodge, Ajo
SAMPLING LOCATION [illegible]
SAMPLE TYPE
SAMPLE NUMBERS [illegible]
SAMPLING METHOD
SAMPLED BY [illegible] DATE SAMPLED 6-14-78
CONTAINER TYPE SAMPLE VOLUME
SAMPLE MATRIX

LOG REMARKS fractions 1 and 4 consumed in previous analysis

ANALYTICAL DATA

DATE REPORT DUE

SAMPLE NO.	PARAMETERS	ANALYTICAL METHOD	VALUES	DATE OF ANALYSIS	REMARKS
-2	Pb	Atomic Absorption	[illegible] 30 µg	4-27-77	
-3	"	"	3 µg	"	

SAMPLE INFORMATION
FOR LABORATORY OPERATIONS

DATE RECEIVED 6-21-78 LAB NO. 170

SAMPLING DATA

GEOGRAPHICAL ORIGIN [illegible]-Dodge, Ariz
SAMPLING LOCATION [illegible]
SAMPLE TYPE
SAMPLE NUMBERS [illegible]-As-3
SAMPLING METHOD
SAMPLED BY Jonalex DATE SAMPLED 6-15-78
CONTAINER TYPE ✓ SAMPLE VOLUME
SAMPLE MATRIX

LOG REMARKS fractions 1 and 4 consumed in previous analysis

ANALYTICAL DATA

DATE REPORT DUE

SAMPLE NO.	PARAMETERS	ANALYTICAL METHOD	VALUES	DATE OF ANALYSIS	REMARKS
-2	Pb	Atomic Absorption	1070 µg	4-27-78	
-3	"	"	<1 µg	"	

SAMPLE INFORMATION
FOR LABORATORY OPERATIONS

DATE RECEIVED 6-21-78 LAB NO. 171

SAMPLING DATA

GEOGRAPHICAL ORIGIN Prior--Dodge, Ajo
SAMPLING LOCATION [illegible]
SAMPLE TYPE
SAMPLE NUMBERS 1- AO- As-3
SAMPLING METHOD
SAMPLED BY Jongleux DATE SAMPLED 6-15-78
CONTAINER TYPE SAMPLE VOLUME
SAMPLE MATRIX

LOG REMARKS fractions 1 and 4 consumed in previous analysis

ANALYTICAL DATA

DATE REPORT DUE

SAMPLE NO.	PARAMETERS	ANALYTICAL METHOD	VALUES	DATE OF ANALYSIS	REMARKS
-2	Pb	Atomic Absorption	76.1 µg	4-27-79	
-3	"	"	2 µg	"	

SAMPLE INFORMATION
FOR LABORATORY OPERATIONS

DATE RECEIVED 6-21-78 LAB NO. 172

SAMPLING DATA

GEOGRAPHICAL ORIGIN Phelps-Dodge, Ajo
SAMPLING LOCATION Acid Inlet (North)
SAMPLE TYPE
SAMPLE NUMBERS AI-I-As-3
SAMPLING METHOD
SAMPLED BY Jongleux DATE SAMPLED 6-15-78
CONTAINER TYPE SAMPLE VOLUME
SAMPLE MATRIX

LOG REMARKS fractions 1 and 4

ANALYTICAL DATA

DATE REPORT DUE

SAMPLE NO.	PARAMETERS	ANALYTICAL METHOD	VALUES	DATE OF ANALYSIS	REMARKS
-2	Pb	Atomic Absorption	154 µg	4-27-79	
-3	"	"	2 µg	"	

SAMPLE INFORMATION
FOR LABORATORY OPERATIONS

DATE RECEIVED 6-21-78 LAB NO. 173

SAMPLING DATA

GEOGRAPHICAL ORIGIN Phelps-Dodge Air
SAMPLING LOCATION Acid Inlet (South)
SAMPLE TYPE
SAMPLE NUMBERS AI-II-As-3
SAMPLING METHOD
SAMPLED BY Conway DATE SAMPLED 6-15-78
CONTAINER TYPE SAMPLE VOLUME
SAMPLE MATRIX

LOG REMARKS fractions 1 and 4 consumed by previous

ANALYTICAL DATA

DATE REPORT DUE

SAMPLE NO.	PARAMETERS	ANALYTICAL METHOD	VALUES	DATE OF ANALYSIS	REMARKS
-2	Pb	Atomic Absorption	3780 µg	4-27-79	
-3	"	"	1 µg	4-27-79	

SAMPLE INFORMATION
FOR LABORATORY OPERATIONS

DATE RECEIVED 6-21-78 LAB NO. 174

SAMPLING DATA

GEOGRAPHICAL ORIGIN Phelps-Dodge, Ajo
SAMPLING LOCATION pump tank
SAMPLE TYPE liquid acid - H_2SO_4
SAMPLE NUMBERS
SAMPLING METHOD grab
SAMPLED BY P-D personnel DATE SAMPLED 6-13, 14, 15-78
CONTAINER TYPE SAMPLE VOLUME
SAMPLE MATRIX 93% H_2SO_4

LOG REMARKS -1 => 6-13 ; -2 => 6-14 , -3 => 6-15

ANALYTICAL DATA

DATE REPORT DUE

SAMPLE NO.	PARAMETERS	ANALYTICAL METHOD	VALUES	DATE OF ANALYSIS	REMARKS
-1	Pb	Atomic Absorption	0.0[illegible] µg/ml	4-27-79	
-2	"	"	0.013 µg/ml	"	
-3	"	"	0.081 µg/ml	"	

SAMPLE INFORMATION
FOR LABORATORY OPERATIONS

DATE RECEIVED 6-21-78 LAB NO. 175

SAMPLING DATA

GEOGRAPHICAL ORIGIN Phelps-Dodge, Ajo
SAMPLING LOCATION Acid Plant Purge
SAMPLE TYPE Water
SAMPLE NUMBERS
SAMPLING METHOD Grab
SAMPLED BY Co. personnel DATE SAMPLED 6-13, 14, 15-78
CONTAINER TYPE SAMPLE VOLUME
SAMPLE MATRIX

LOG REMARKS -1 ⇒ 6-13 / -2 ⇒ 6-14 / -3 ⇒ 6-15

ANALYTICAL DATA

DATE REPORT DUE

SAMPLE NO.	PARAMETERS	ANALYTICAL METHOD	VALUES	DATE OF ANALYSIS	REMARKS
-1	Pb	Atomic Absorption	27.5 µg/l	6-27-78	
-2	↓	↓	34.3 µg/l	"	
-3	↓	↓	14.5 µg/l	"	

SAMPLE INFORMATION
FOR LABORATORY OPERATIONS

DATE RECEIVED 6-21-78 LAB NO. 176

SAMPLING DATA

GEOGRAPHICAL ORIGIN Phelps-Dodge, Ajo
SAMPLING LOCATION conv. precipitator
SAMPLE TYPE process
SAMPLE NUMBERS
SAMPLING METHOD grab
SAMPLED BY P-D personnel DATE SAMPLED 6-13, 14, 15-78
CONTAINER TYPE SAMPLE VOLUME
SAMPLE MATRIX

LOG REMARKS

ANALYTICAL DATA

DATE REPORT DUE

SAMPLE NO.	PARAMETERS	ANALYTICAL METHOD	VALUES	DATE OF ANALYSIS	REMARKS
-1	Pb	Atomic Absorption	0.581%	4-23-78	conv. precipitator 6-13-78
-2	↓	↓	0.503%	"	conv. precipitator 6-14-78
-3	↓	↓	0.[illegible]50%	"	conv. precipitator 6-15-78

SAMPLE INFORMATION
FOR LABORATORY OPERATIONS

DATE RECEIVED 6-21-78 LAB NO. 177

SAMPLING DATA

GEOGRAPHICAL ORIGIN Phelps-Dodge, Ajo
SAMPLING LOCATION Anode
SAMPLE TYPE Copper
SAMPLE NUMBERS
SAMPLING METHOD [illegible]
SAMPLED BY [illegible] DATE SAMPLED 6-14,15,16-78
CONTAINER TYPE SAMPLE VOLUME
SAMPLE MATRIX

LOG REMARKS

ANALYTICAL DATA

DATE REPORT DUE

SAMPLE NO.	PARAMETERS	ANALYTICAL METHOD	VALUES	DATE OF ANALYSIS	REMARKS
-1	Pb	Atomic Absorption	0.001%	4-27-79	Cu anode 6-14-78
-2	↓	↓	0.0021%	"	Cu anode 6-15-78
-3	↓	↓	0.0010%	"	Cu anode 6-16 78

SAMPLE INFORMATION
FOR LABORATORY OPERATIONS

DATE RECEIVED 6-21-78 LAB NO. 178

SAMPLING DATA

GEOGRAPHICAL ORIGIN Phelps-Dodge, Ajo
SAMPLING LOCATION conv. Slag
SAMPLE TYPE [illegible]
SAMPLE NUMBERS
SAMPLING METHOD [illegible]
SAMPLED BY [illegible] personnel DATE SAMPLED 6-13, 14, 15-78
CONTAINER TYPE SAMPLE VOLUME
SAMPLE MATRIX

LOG REMARKS

ANALYTICAL DATA

DATE REPORT DUE

SAMPLE NO.	PARAMETERS	ANALYTICAL METHOD	VALUES	DATE OF ANALYSIS	REMARKS
-1	Pb	Atomic Absorption	0.0332%	4-27-78	conv. Slag 6-13-78
-2	↓	↓	0.0519%	"	conv. slag 6-14-78
-3	↓	↓	0.0391%	"	conv slag 6-15-78

SAMPLE INFORMATION
FOR LABORATORY OPERATIONS

DATE RECEIVED 6-21-78 LAB NO. 179

SAMPLING DATA

GEOGRAPHICAL ORIGIN Phelps-Dodge - Ajo
SAMPLING LOCATION Matte
SAMPLE TYPE process
SAMPLE NUMBERS
SAMPLING METHOD grab
SAMPLED BY P-D personnel DATE SAMPLED 6-13,14,15-78
CONTAINER TYPE SAMPLE VOLUME
SAMPLE MATRIX

LOG REMARKS

ANALYTICAL DATA

DATE REPORT DUE

SAMPLE NO.	PARAMETERS	ANALYTICAL METHOD	VALUES	DATE OF ANALYSIS	REMARKS
-1	Pb	Atomic Absorption	0.044%	4-27-[illegible]	Matte 6-13-78
-2	↓	↓	0.0418%	"	Matte 6-14-78
-3	↓	↓	0.0447%	"	Matte 6-15-78

SAMPLE INFORMATION
FOR LABORATORY OPERATIONS

DATE RECEIVED 7-27-78 LAB NO. 214

SAMPLING DATA

GEOGRAPHICAL ORIGIN Phelps-Dodge, Playas, N.M.
SAMPLING LOCATION
SAMPLE TYPE process
SAMPLE NUMBERS
SAMPLING METHOD grab
SAMPLED BY P-D personnel DATE SAMPLED 7-25, 26-78
CONTAINER TYPE SAMPLE VOLUME
SAMPLE MATRIX

LOG REMARKS

ANALYTICAL DATA

DATE REPORT DUE

SAMPLE NO.	PARAMETERS	ANALYTICAL METHOD	VALUES	DATE OF ANALYSIS	REMARKS
-1	Pb	Atomic Absorption	0.140%	4-27-79	Flash Furnace Feed
-2	↓	↓	0.052%	↓	Flash Furnace Slag
-3	↓	↓	0.177%	↓	Flash Furnace Matte
-4	↓		0.224%	↓	Electric Furnace Matte
-5	↓		0.177%	↓	Electric Furnace Slag
-6	↓	↓	0.073%	↓	converter blister
-7	↓	↓	0.047%	↓	converter slag

SAMPLE INFORMATION
FOR LABORATORY OPERATIONS

DATE RECEIVED 7-27-78 LAB NO. 215

SAMPLING DATA

GEOGRAPHICAL ORIGIN Phelps-Dodge, Payson N.M.
SAMPLING LOCATION HC
SAMPLE TYPE
SAMPLE NUMBERS HC-As-1
SAMPLING METHOD
SAMPLED BY Jungleuv DATE SAMPLED 7-25-78
CONTAINER TYPE SAMPLE VOLUME
SAMPLE MATRIX

LOG REMARKS fraction 1 consumed in previous analysis

ANALYTICAL DATA

DATE REPORT DUE

SAMPLE NO.	PARAMETERS	ANALYTICAL METHOD	VALUES	DATE OF ANALYSIS	REMARKS
-2	Pb	Atomic Absorption	5?0 µg	4-27-79	probe rinse
-3	"	"	230 µg	"	imp 1,2

SAMPLE INFORMATION
FOR LABORATORY OPERATIONS

DATE RECEIVED 7-27-78 LAB NO. 216

SAMPLING DATA

GEOGRAPHICAL ORIGIN Phelps Dodge, Playas N.M.
SAMPLING LOCATION Conv.
SAMPLE TYPE
SAMPLE NUMBERS HC-As-2
SAMPLING METHOD
SAMPLED BY Jonsleux DATE SAMPLED 7-26-78
CONTAINER TYPE SAMPLE VOLUME
SAMPLE MATRIX

LOG REMARKS

ANALYTICAL DATA

DATE REPORT DUE

SAMPLE NO.	PARAMETERS	ANALYTICAL METHOD	VALUES	DATE OF ANALYSIS	REMARKS
-2	Pb	Atomic Absorption	[illegible] µg	7-27-78	proce rinse
-3	"	"	645 µg	"	imp 1,2

SAMPLE INFORMATION
FOR LABORATORY OPERATIONS

DATE RECEIVED 7-27-78 LAB NO. 217

SAMPLING DATA

GEOGRAPHICAL ORIGIN Phelps-Dodge, Playas N.M.
SAMPLING LOCATION conv.
SAMPLE TYPE
SAMPLE NUMBERS HC-As-3
SAMPLING METHOD
SAMPLED BY Jenolcox DATE SAMPLED 7-26-78
CONTAINER TYPE SAMPLE VOLUME
SAMPLE MATRIX

LOG REMARKS

ANALYTICAL DATA

DATE REPORT DUE

SAMPLE NO.	PARAMETERS	ANALYTICAL METHOD	VALUES	DATE OF ANALYSIS	REMARKS
-2	Pb	Atomic Absorption	3550 µg	4-27-79	prcoz rinse
-3	"	"	8 µg	"	imp 1,2

SAMPLE INFORMATION
FOR LABORATORY OPERATIONS

DATE RECEIVED 9-29-78 LAB NO. 268

SAMPLING DATA

GEOGRAPHICAL ORIGIN Asarco - Tacoma Wash.
SAMPLING LOCATION
SAMPLE TYPE process
SAMPLE NUMBERS
SAMPLING METHOD grab
SAMPLED BY Asarco personnel DATE SAMPLED 9-19, 20, 21-78
CONTAINER TYPE SAMPLE VOLUME
SAMPLE MATRIX

LOG REMARKS

ANALYTICAL DATA

DATE REPORT DUE

SAMPLE NO.	PARAMETERS	ANALYTICAL METHOD	VALUES	DATE OF ANALYSIS	REMARKS
-1	Pb	Atomic Absorption	0.23%	4-27-79	reverb slag #2 9-19-78
-2	↓	↓	0.270%	↓	reverb slag #2 9-20-78
-3	↓	↓	0.38%	↓	reverb slag #2 9-21-78

SAMPLE INFORMATION
FOR LABORATORY OPERATIONS

DATE RECEIVED 9-29-78 LAB NO. 269

SAMPLING DATA

GEOGRAPHICAL ORIGIN Asarco - Tacoma
SAMPLING LOCATION
SAMPLE TYPE process
SAMPLE NUMBERS
SAMPLING METHOD grab
SAMPLED BY Asarco personnel DATE SAMPLED 9-19 → 23-78
CONTAINER TYPE SAMPLE VOLUME
SAMPLE MATRIX

LOG REMARKS

ANALYTICAL DATA

DATE REPORT DUE

SAMPLE NO.	PARAMETERS	ANALYTICAL METHOD	VALUES	DATE OF ANALYSIS	REMARKS
-1	Pb	Atomic Absorption	[illegible]	[illegible]	Slag pot #1 9-19-78
-2	↓	↓	0.157%	↓	Slag pot #2 Furnace 9-20-78
-3	↓	↓	0.435%	↓	Slag pot #1 Dump 9-20-78
-4	↓	↓	0.266%	↓	Slag pot #2 Dump 9-21-78
-5	↓	↓	0.778%	↓	Slag pot #3 9-21-78
-6	↓	↓	0.705%	↓	Slag pot #3 top 9-22-78
-7	↓	↓	0.835%	↓	Slag pot #3 dump 9-22-78
-8	↓	↓	0.479%	↓	Slag pot #4 9-22-78
-9	↓	↓	0.784%	↓	Slag pot #3 Bottom 9-22-78
-10	↓	↓	0.483%	↓	Slag pot #4 dump 9-23-78

SAMPLE INFORMATION
FOR LABORATORY OPERATIONS

DATE RECEIVED 9-29-78 LAB NO. 270

SAMPLING DATA

GEOGRAPHICAL ORIGIN Asarco - Tacoma
SAMPLING LOCATION smelter
SAMPLE TYPE
SAMPLE NUMBERS
SAMPLING METHOD grab
SAMPLED BY Asarco - Personnel DATE SAMPLED 9-25-78
CONTAINER TYPE SAMPLE VOLUME
SAMPLE MATRIX

LOG REMARKS

ANALYTICAL DATA

DATE REPORT DUE

SAMPLE NO.	PARAMETERS	ANALYTICAL METHOD	VALUES	DATE OF ANALYSIS	REMARKS
270	Pb	Atomic Absorption	0.020	4-27-79	mexican Arsenic 9-25-78

SAMPLE INFORMATION
FOR LABORATORY OPERATIONS

DATE RECEIVED 9-29-78 LAB NO. 271

SAMPLING DATA

GEOGRAPHICAL ORIGIN Asarco, Tacoma
SAMPLING LOCATION
SAMPLE TYPE process
SAMPLE NUMBERS
SAMPLING METHOD grab
SAMPLED BY Asarco personnel DATE SAMPLED 9-24, 25-78
CONTAINER TYPE SAMPLE VOLUME
SAMPLE MATRIX

LOG REMARKS

ANALYTICAL DATA

DATE REPORT DUE

SAMPLE NO.	PARAMETERS	ANALYTICAL METHOD	VALUES	DATE OF ANALYSIS	REMARKS
-1	Pb	Atomic Absorption	0.165%	4-27-79	Godfry calcine charge 9-24-78
-2	↓	↓	0.830%	↓	" 9-25-78
-3	↓	↓	0.260%	↓	" 9-25-78
-4	↓	↓	0.220%	↓	" 9-24-78.

SAMPLE INFORMATION
FOR LABORATORY OPERATIONS

DATE RECEIVED 9-29-78 LAB NO. 272

SAMPLING DATA

GEOGRAPHICAL ORIGIN Asarco, Tacoma
SAMPLING LOCATION
SAMPLE TYPE process
SAMPLE NUMBERS
SAMPLING METHOD grab
SAMPLED BY Asarco personnel DATE SAMPLED 9-15-22-78
CONTAINER TYPE SAMPLE VOLUME
SAMPLE MATRIX

LOG REMARKS

ANALYTICAL DATA

DATE REPORT DUE

SAMPLE NO.	PARAMETERS	ANALYTICAL METHOD	VALUES	DATE OF ANALYSIS	REMARKS
-1	Pb	Atomic Absorption	0.152%	9-27-78	Roaster dirige 9-15-78
-2	↓	↓	0.223%	↓	" 9-16-78
-3	↓	↓	0.142%	↓	" 9-18-78
-4	↓	↓	0.142%	↓	" 9-19-78
-5	↓	↓	0.167%	↓	" 9-20-78
-6	↓	↓	0.152%	↓	" 9-21-78
-7	↓	↓	0.138%	↓	" 9-22-78

SAMPLE INFORMATION
FOR LABORATORY OPERATIONS

DATE RECEIVED 9-29-78 LAB NO. 273

SAMPLING DATA

GEOGRAPHICAL ORIGIN Asarco - Tacoma
SAMPLING LOCATION
SAMPLE TYPE process
SAMPLE NUMBERS
SAMPLING METHOD grab
SAMPLED BY Asarco personnel DATE SAMPLED 9-19→21-78
CONTAINER TYPE SAMPLE VOLUME
SAMPLE MATRIX

LOG REMARKS

ANALYTICAL DATA

DATE REPORT DUE

SAMPLE NO.	PARAMETERS	ANALYTICAL METHOD	VALUES	DATE OF ANALYSIS	REMARKS
-1	Pb	Atomic Absorption	0.845%	4-27-79	conv. Slag 9-19-78
-2	↓	↓	1.36%		" 9-20-78
-3	↓	↓	0.211%	↓	" 9-21-78

SAMPLE INFORMATION
FOR LABORATORY OPERATIONS

DATE RECEIVED 9-29-78 LAB NO. 274

SAMPLING DATA

GEOGRAPHICAL ORIGIN Asarco - Tacoma
SAMPLING LOCATION
SAMPLE TYPE process
SAMPLE NUMBERS
SAMPLING METHOD grab
SAMPLED BY Asarco · Personnel DATE SAMPLED 9-15 → 22-78
CONTAINER TYPE SAMPLE VOLUME
SAMPLE MATRIX

LOG REMARKS

ANALYTICAL DATA

DATE REPORT DUE

SAMPLE NO.	PARAMETERS	ANALYTICAL METHOD	VALUES	DATE OF ANALYSIS	REMARKS
-1	Pb	Atomic Absorption	0.100%	11-27-78	Roaster calcine 9-15-78
-2	↓	↓	0.103%	↓	9-16-78
-3	↓	↓	0.231%	↓	9-18-78
-4	↓	↓	0.368%	↓	9-19-78
-5	↓	↓	0.201%	↓	9-20-78
-6	↓	↓	0.279%	↓	9-21-78
-7	↓	↓	0.039%	↓	9-22-78

SAMPLE INFORMATION
FOR LABORATORY OPERATIONS

DATE RECEIVED 9-29-78 LAB NO. 275

SAMPLING DATA

GEOGRAPHICAL ORIGIN Asarco - Tacoma
SAMPLING LOCATION
SAMPLE TYPE process
SAMPLE NUMBERS
SAMPLING METHOD grab
SAMPLED BY Asarco Personnel DATE SAMPLED 9-19→21-78
CONTAINER TYPE SAMPLE VOLUME
SAMPLE MATRIX

LOG REMARKS

ANALYTICAL DATA

DATE REPORT DUE

SAMPLE NO.	PARAMETERS	ANALYTICAL METHOD	VALUES	DATE OF ANALYSIS	REMARKS
-1	Pb	Atomic Absorption	0.282%	2-27-79	#2 Retero Matte 9-19-78
-2	↓	↓	0.107%	↓	" 9-20-78
-3	↓	↓	0.220%	↓	" 9-21-78

SAMPLE INFORMATION
FOR LABORATORY OPERATIONS

DATE RECEIVED 9-29-78 LAB NO. 276

SAMPLING DATA

GEOGRAPHICAL ORIGIN Asarco - Tacoma
SAMPLING LOCATION
SAMPLE TYPE process
SAMPLE NUMBERS
SAMPLING METHOD grab
SAMPLED BY Asarco personnel DATE SAMPLED 9-78
CONTAINER TYPE SAMPLE VOLUME
SAMPLE MATRIX

LOG REMARKS

ANALYTICAL DATA

DATE REPORT DUE

SAMPLE NO.	PARAMETERS	ANALYTICAL METHOD	VALUES	DATE OF ANALYSIS	REMARKS
-1	Pb	Atomic Absorption	0.521%	4-27-79	#1 Plate treater
-2	↓	↓	0.281%	↓	As baghouse dust
-3	↓	↓	0.213%	↓	#1 Roaster baghouse dust

SAMPLE INFORMATION
FOR LABORATORY OPERATIONS

DATE RECEIVED 10-1-78 LAB NO. 277

SAMPLING DATA

GEOGRAPHICAL ORIGIN Asarco — Tacoma
SAMPLING LOCATION Matte tapping
SAMPLE TYPE
SAMPLE NUMBERS AA-MT-1
SAMPLING METHOD
SAMPLED BY D. Powell DATE SAMPLED 9-19-78
CONTAINER TYPE SAMPLE VOLUME
SAMPLE MATRIX

LOG REMARKS fraction 1 lost in previous analysis

ANALYTICAL DATA

DATE REPORT DUE

SAMPLE NO.	PARAMETERS	ANALYTICAL METHOD	VALUES	DATE OF ANALYSIS	REMARKS
-2	Pb	Atomic Absorption	[illegible]	4-27-79	probe rinse - -NaOH
-3	↓	↓	225 µg	↓	probe rinse - -HNO_3
-4	↓	↓	7 µg	↓	imp 1,2 - HNO_3 rinse
-5	↓	↓	0.7 µg	↓	imp 1,2

SAMPLE INFORMATION
FOR LABORATORY OPERATIONS

DATE RECEIVED 10-1-78 LAB NO. 278

SAMPLING DATA

GEOGRAPHICAL ORIGIN Asarco – Tacoma
SAMPLING LOCATION Matte Tapping
SAMPLE TYPE
SAMPLE NUMBERS AA-MT-2
SAMPLING METHOD
SAMPLED BY D. Powell DATE SAMPLED 9-20-78
CONTAINER TYPE SAMPLE VOLUME
SAMPLE MATRIX

LOG REMARKS fraction 1 consumed in previous analysis

ANALYTICAL DATA

DATE REPORT DUE

SAMPLE NO.	PARAMETERS	ANALYTICAL METHOD	VALUES	DATE OF ANALYSIS	REMARKS
-2	Pb	Atomic Absorption	4650 µg	4-27-79	probe rinse
-3	"	"	1 µg	"	imp 1,2

SAMPLE INFORMATION
FOR LABORATORY OPERATIONS

DATE RECEIVED 10-1-78 LAB NO. 279

SAMPLING DATA

GEOGRAPHICAL ORIGIN Asarco – Tacoma
SAMPLING LOCATION Matte Tapping
SAMPLE TYPE
SAMPLE NUMBERS AA-MT-3
SAMPLING METHOD
SAMPLED BY D. Powell DATE SAMPLED 9-21-78
CONTAINER TYPE SAMPLE VOLUME
SAMPLE MATRIX

LOG REMARKS fraction 1 consumed in previous analysis

ANALYTICAL DATA

DATE REPORT DUE

SAMPLE NO.	PARAMETERS	ANALYTICAL METHOD	VALUES	DATE OF ANALYSIS	REMARKS
-2	Pb	Atomic Absorption	4680 µg	4-27-79	probe rinse
-3	"	"	3 µg	"	Imp 1,2

SAMPLE INFORMATION
FOR LABORATORY OPERATIONS

DATE RECEIVED 10-1-78 LAB NO. 280

SAMPLING DATA

GEOGRAPHICAL ORIGIN Asarco - Tacoma
SAMPLING LOCATION CD
SAMPLE TYPE
SAMPLE NUMBERS AA-CD-1
SAMPLING METHOD
SAMPLED BY D. Powell DATE SAMPLED 9-20-79
CONTAINER TYPE SAMPLE VOLUME
SAMPLE MATRIX

LOG REMARKS fraction 1 consumed in previous analysis

ANALYTICAL DATA

DATE REPORT DUE

SAMPLE NO.	PARAMETERS	ANALYTICAL METHOD	VALUES	DATE OF ANALYSIS	REMARKS
-2	Pb	Atomic Absorption	2310 µg	4-27-79	crobe rinse
-3	"	"	8 µg	"	imp 1,2

SAMPLE INFORMATION
FOR LABORATORY OPERATIONS

DATE RECEIVED 10-1-78 LAB NO. 281

SAMPLING DATA

GEOGRAPHICAL ORIGIN Asarco- Tacoma
SAMPLING LOCATION C D
SAMPLE TYPE
SAMPLE NUMBERS A1-CD-2
SAMPLING METHOD
SAMPLED BY D. Powell DATE SAMPLED 9-21-78
CONTAINER TYPE SAMPLE VOLUME
SAMPLE MATRIX

LOG REMARKS fraction 1 consumed in previous analysis

ANALYTICAL DATA

DATE REPORT DUE

SAMPLE NO.	PARAMETERS	ANALYTICAL METHOD	VALUES	DATE OF ANALYSIS	REMARKS
-2	Pb	Atomic Absorption	2500 µg	4-27-79	probe rinse
-3	"	"	5 µg	"	imp 1,2

SAMPLE INFORMATION
FOR LABORATORY OPERATIONS

DATE RECEIVED 10-1-78 LAB NO. 282

SAMPLING DATA

GEOGRAPHICAL ORIGIN Asarco- Tacoma
SAMPLING LOCATION CD
SAMPLE TYPE
SAMPLE NUMBERS AA-CD-3
SAMPLING METHOD
SAMPLED BY D. Powell DATE SAMPLED 9-23-78
CONTAINER TYPE SAMPLE VOLUME
SAMPLE MATRIX

LOG REMARKS fraction 1 consumed in previous analysis

ANALYTICAL DATA

DATE REPORT DUE

SAMPLE NO.	PARAMETERS	ANALYTICAL METHOD	VALUES	DATE OF ANALYSIS	REMARKS
-2	Pb	Atomic Absorption	186 µg	4-27-79	probe rinse
-3	"	"	7 µg	"	imp 1,2

SAMPLE INFORMATION
FOR LABORATORY OPERATIONS

DATE RECEIVED 10-1-78 LAB NO. 283

SAMPLING DATA

GEOGRAPHICAL ORIGIN Asarco - Tacoma
SAMPLING LOCATION Electrostatic Precipitator
SAMPLE TYPE
SAMPLE NUMBERS AA-ESP-1
SAMPLING METHOD
SAMPLED BY D. Powell DATE SAMPLED 9-15-78
CONTAINER TYPE SAMPLE VOLUME
SAMPLE MATRIX

LOG REMARKS fraction 1 consumed in previous analysis

ANALYTICAL DATA

DATE REPORT DUE

SAMPLE NO.	PARAMETERS	ANALYTICAL METHOD	VALUES	DATE OF ANALYSIS	REMARKS
-2	Pb	Atomic Absorption	3300 µg	4-27-79	probe rinse - NaOH
-3	↓	↓	1100 µg	↓	probe rinse - HNO_3
-4	↓	↓	1 µg	↓	imp 1,2 - HNO_3 rinse
-5	↓	↓	<1 µg	↓	imp 1,2

SAMPLE INFORMATION
FOR LABORATORY OPERATIONS

DATE RECEIVED 10-1-78 LAB NO. 284

SAMPLING DATA

GEOGRAPHICAL ORIGIN Asarco - Tacoma
SAMPLING LOCATION electrostatic precipitator
SAMPLE TYPE
SAMPLE NUMBERS AA-ESP-2
SAMPLING METHOD
SAMPLED BY D. Powell DATE SAMPLED 9-16-78
CONTAINER TYPE SAMPLE VOLUME
SAMPLE MATRIX

LOG REMARKS fraction 1 consumed in previous analysis

ANALYTICAL DATA

DATE REPORT DUE

SAMPLE NO.	PARAMETERS	ANALYTICAL METHOD	VALUES	DATE OF ANALYSIS	REMARKS
-2	Pb	Atomic Absorption	43 µg	4-27-79	probe rinse - NaOH
-3	↓	↓	310 µg	"	probe rinse - HNO_3
-4	↓	↓	16 µg	"	imp 1,2 HNO_3 rinse
-5	↓	↓	2 µg	"	imp 1,2

SAMPLE INFORMATION
FOR LABORATORY OPERATIONS

DATE RECEIVED 10-1-78 LAB NO. 285

SAMPLING DATA

GEOGRAPHICAL ORIGIN Asarco - Tacoma
SAMPLING LOCATION electrostatic precipitator
SAMPLE TYPE
SAMPLE NUMBERS AA-ESP-3
SAMPLING METHOD
SAMPLED BY D. Powell DATE SAMPLED 9-19-78
CONTAINER TYPE SAMPLE VOLUME
SAMPLE MATRIX

LOG REMARKS fraction 1 consumed in previous analysis

ANALYTICAL DATA

DATE REPORT DUE

SAMPLE NO.	PARAMETERS	ANALYTICAL METHOD	VALUES	DATE OF ANALYSIS	REMARKS
-2	Pb	Atomic Absorption	1730 µg	4-27-79	
-3	"	"	2 µg	4-27-79	

SAMPLE INFORMATION
FOR LABORATORY OPERATIONS

DATE RECEIVED 10-1-78 LAB NO. 286

SAMPLING DATA

GEOGRAPHICAL ORIGIN Asarco - Tacoma
SAMPLING LOCATION slag tapping
SAMPLE TYPE
SAMPLE NUMBERS AA-ST-1
SAMPLING METHOD
SAMPLED BY D. Powell DATE SAMPLED 9-20-78
CONTAINER TYPE SAMPLE VOLUME
SAMPLE MATRIX

LOG REMARKS fraction 1,3 consumed in previous analysis

ANALYTICAL DATA

DATE REPORT DUE

SAMPLE NO.	PARAMETERS	ANALYTICAL METHOD	VALUES	DATE OF ANALYSIS	REMARKS
-2	Pb	Atomic Absorption	866 µg	4-27-79	proberinse - NaOH
3	↓	↓	83 µg	↓	probe rinse - HNO_3
-4	↓	↓	4 µg	↓	imp 1,2 rinse - HNO_3
-5	↓	↓	2 µg	↓	imp 1,2

SAMPLE INFORMATION
FOR LABORATORY OPERATIONS

DATE RECEIVED 10-1-78 LAB NO. 287

SAMPLING DATA

GEOGRAPHICAL ORIGIN Asarco - Tacoma
SAMPLING LOCATION Slag tapping
SAMPLE TYPE
SAMPLE NUMBERS AA-ST-2
SAMPLING METHOD
SAMPLED BY D. Powell DATE SAMPLED 9-20-78
CONTAINER TYPE SAMPLE VOLUME
SAMPLE MATRIX

LOG REMARKS

ANALYTICAL DATA

DATE REPORT DUE

SAMPLE NO.	PARAMETERS	ANALYTICAL METHOD	VALUES	DATE OF ANALYSIS	REMARKS
-2	Pb	Atomic Absorption	2140 µg	4-27-79	probe rinse
-3	"	"	5 µg	"	imp 1,2

SAMPLE INFORMATION
FOR LABORATORY OPERATIONS

DATE RECEIVED 10-1-78 LAB NO. 288

SAMPLING DATA

GEOGRAPHICAL ORIGIN Asarco - Tacoma
SAMPLING LOCATION Slag tapping
SAMPLE TYPE
SAMPLE NUMBERS AA-ST-3
SAMPLING METHOD
SAMPLED BY D. Powell DATE SAMPLED 9-21-78
CONTAINER TYPE SAMPLE VOLUME
SAMPLE MATRIX

LOG REMARKS fraction 1 consumed in previous analysis

ANALYTICAL DATA

DATE REPORT DUE

SAMPLE NO.	PARAMETERS	ANALYTICAL METHOD	VALUES	DATE OF ANALYSIS	REMARKS
-2	Pb	Atomic Absorption	834 µg	4-27-79	probe rinse
-3	"	"	6 µg	"	imp 1,2

SAMPLE INFORMATION
FOR LABORATORY OPERATIONS

DATE RECEIVED 10-1-78 LAB NO. 289

SAMPLING DATA

GEOGRAPHICAL ORIGIN Asarco - Tacoma,
SAMPLING LOCATION Roaster outlet
SAMPLE TYPE
SAMPLE NUMBERS AA-RO-1
SAMPLING METHOD
SAMPLED BY D. Powell DATE SAMPLED 9-15-78
CONTAINER TYPE SAMPLE VOLUME
SAMPLE MATRIX

LOG REMARKS Fractions 1,3 consumed in previous analysis

ANALYTICAL DATA

DATE REPORT DUE

SAMPLE NO.	PARAMETERS	ANALYTICAL METHOD	VALUES	DATE OF ANALYSIS	REMARKS
-2	Pb	Atomic Absorption	17 µg	4-27-79	probe rinse
-4	"	"	1 µg	"	imp 1,2

SAMPLE INFORMATION
FOR LABORATORY OPERATIONS

DATE RECEIVED 10-1-78 LAB NO. 290

SAMPLING DATA

GEOGRAPHICAL ORIGIN Asarco - Tacoma
SAMPLING LOCATION Roaster Outlet
SAMPLE TYPE
SAMPLE NUMBERS AA-RO-2
SAMPLING METHOD
SAMPLED BY D. Powell DATE SAMPLED 9-15-78
CONTAINER TYPE SAMPLE VOLUME
SAMPLE MATRIX

LOG REMARKS fractions 1,5 consumed in previous analysis

ANALYTICAL DATA

DATE REPORT DUE

SAMPLE NO.	PARAMETERS	ANALYTICAL METHOD	VALUES	DATE OF ANALYSIS	REMARKS
-2	Pb	Atomic Absorption	29 μg	4-27-79	probe rinse-NaOH
-3	↓	↓	8 μg	↓	probe rinse-HNO_3
-4	↓	↓	2 μg	↓	imp 1,2
-6	↓	↓	3 μg	↓	imp 1,2 HNO_3 rinse

SAMPLE INFORMATION
FOR LABORATORY OPERATIONS

DATE RECEIVED 10-1-78 LAB NO. 291

SAMPLING DATA

GEOGRAPHICAL ORIGIN Asarco - Tacoma
SAMPLING LOCATION Roaster outlet
SAMPLE TYPE
SAMPLE NUMBERS AA-RO-3
SAMPLING METHOD
SAMPLED BY D. Powell DATE SAMPLED 9-16-78
CONTAINER TYPE SAMPLE VOLUME
SAMPLE MATRIX

LOG REMARKS fractions 1,4 consumed in previous analysis

ANALYTICAL DATA

DATE REPORT DUE

SAMPLE NO.	PARAMETERS	ANALYTICAL METHOD	VALUES	DATE OF ANALYSIS	REMARKS
-2	Pb	Atomic Absorption	35 µg	4-27-79	probe rinse-NaOH
-3	↓	↓	72 µg	↓	probe rinse - HNO_3
-4	↓	↓	1 µg	↓	imp 1,2 HNO_3 rinse
-5	↓	↓	2 µg	↓	imp 1,2

SAMPLE INFORMATION
FOR LABORATORY OPERATIONS

DATE RECEIVED 10-1-78 LAB NO. 292

SAMPLING DATA

GEOGRAPHICAL ORIGIN Asarco – Tacoma
SAMPLING LOCATION Roaster Inlet
SAMPLE TYPE
SAMPLE NUMBERS AA-RI-1
SAMPLING METHOD
SAMPLED BY D. Powell DATE SAMPLED 9-15-78
CONTAINER TYPE SAMPLE VOLUME
SAMPLE MATRIX

LOG REMARKS fraction 1 consumed in previous analysis

ANALYTICAL DATA

DATE REPORT DUE

SAMPLE NO.	PARAMETERS	ANALYTICAL METHOD	VALUES	DATE OF ANALYSIS	REMARKS
-2	Pb	Atomic Absorption	180 µg	4-27-79	probe rinse-NaOH
-3	↓	↓	1340 µg	↓	probe rinse-HNO_3
-4	↓	↓	2 µg	↓	imp 1,2

SAMPLE INFORMATION
FOR LABORATORY OPERATIONS

DATE RECEIVED 10-1-78 LAB NO. 293

SAMPLING DATA

GEOGRAPHICAL ORIGIN Asarco - Tacoma
SAMPLING LOCATION Roaster Inlet
SAMPLE TYPE
SAMPLE NUMBERS AA-RI-2
SAMPLING METHOD
SAMPLED BY D. Powell DATE SAMPLED 9-16-78
CONTAINER TYPE SAMPLE VOLUME
SAMPLE MATRIX

LOG REMARKS fraction 1 consumed in previous analysis

ANALYTICAL DATA

DATE REPORT DUE

SAMPLE NO.	PARAMETERS	ANALYTICAL METHOD	VALUES	DATE OF ANALYSIS	REMARKS
-2	Pb	Atomic Absorption	3300 µg	4-27-79	probe rinse - NaOH
-3	↓	↓	664 µg	↓	probe rinse - HNO_3
-4	↓	↓	4 µg	↓	imp 1,2 HNO_3 rinse
-5	↓	↓	1 µg	↓	imp 1,2

SAMPLE INFORMATION
FOR LABORATORY OPERATIONS

DATE RECEIVED 10-1-78 LAB NO. 294

SAMPLING DATA

GEOGRAPHICAL ORIGIN Asarco - Tacoma
SAMPLING LOCATION Roaster Inlet
SAMPLE TYPE
SAMPLE NUMBERS
SAMPLING METHOD AA-RI-3
SAMPLED BY D. Powell DATE SAMPLED 9-16-78
CONTAINER TYPE SAMPLE VOLUME
SAMPLE MATRIX

LOG REMARKS fractions 1, 4 consumed in previous analysis

ANALYTICAL DATA

DATE REPORT DUE

SAMPLE NO.	PARAMETERS	ANALYTICAL METHOD	VALUES	DATE OF ANALYSIS	REMARKS
-2	Pb	Atomic Absorption	527µg	4-27-79	probe rinse
-3	↓	↓	1370µg	↓	probe HNO_3 rinse
-5	↓	↓	2µg	↓	imp 1, 2

SAMPLE INFORMATION
FOR LABORATORY OPERATIONS

DATE RECEIVED 10-1-78 LAB NO. 295

SAMPLING DATA

GEOGRAPHICAL ORIGIN Asarco - Tacoma
SAMPLING LOCATION Arsenic Kitchen
SAMPLE TYPE
SAMPLE NUMBERS AA-Ak-1
SAMPLING METHOD
SAMPLED BY D. Powell DATE SAMPLED 9-24-78
CONTAINER TYPE SAMPLE VOLUME
SAMPLE MATRIX

LOG REMARKS fraction 1 consumed in previous analysis

ANALYTICAL DATA

DATE REPORT DUE

SAMPLE NO.	PARAMETERS	ANALYTICAL METHOD	VALUES	DATE OF ANALYSIS	REMARKS
-2	Pb	Atomic Absorption	5320 µg	4-27-79	Probe rinse
-3	"	"	2 µg	"	imp 1,2

SAMPLE INFORMATION
FOR LABORATORY OPERATIONS

DATE RECEIVED 10-1-78 LAB NO. 296

SAMPLING DATA

GEOGRAPHICAL ORIGIN Asarco — Tacoma
SAMPLING LOCATION Arsenic Kitchen
SAMPLE TYPE
SAMPLE NUMBERS AA-AK-3
SAMPLING METHOD
SAMPLED BY D. Powell DATE SAMPLED 9-25-78
CONTAINER TYPE SAMPLE VOLUME
SAMPLE MATRIX

LOG REMARKS fraction 1 consumed in previous analysis

ANALYTICAL DATA

DATE REPORT DUE

SAMPLE NO.	PARAMETERS	ANALYTICAL METHOD	VALUES	DATE OF ANALYSIS	REMARKS
-3	Pb	Atomic Absorption	1580μg	4-27-79	Probe rinse (NaOH)
-4	↓	↓	228μg	↓	Probe rinse (HNO_3)
-5	↓	↓	15μg	↓	imp 1, 2

SAMPLE INFORMATION
FOR LABORATORY OPERATIONS

DATE RECEIVED 10-1-78 LAB NO. 297

SAMPLING DATA

GEOGRAPHICAL ORIGIN Asarco - Tacoma
SAMPLING LOCATION Arsenic Kitchen
SAMPLE TYPE
SAMPLE NUMBERS AA-AK-2
SAMPLING METHOD
SAMPLED BY D. Powell DATE SAMPLED 9-25-78
CONTAINER TYPE SAMPLE VOLUME
SAMPLE MATRIX

LOG REMARKS fraction 1 consumed in previous analysis

ANALYTICAL DATA

DATE REPORT DUE

SAMPLE NO.	PARAMETERS	ANALYTICAL METHOD	VALUES	DATE OF ANALYSIS	REMARKS
-2	Pb	Atomic Absorption	3200 µg	4-27-79	probe rinse
-3	"	"	29 µg	"	imp 1,2

SAMPLE INFORMATION
FOR LABORATORY OPERATIONS

DATE RECEIVED 10-1-78 LAB NO. 298

SAMPLING DATA

GEOGRAPHICAL ORIGIN Asarco - Tacoma
SAMPLING LOCATION Arsenic Baghse outlet
SAMPLE TYPE
SAMPLE NUMBERS AA-ABO-1
SAMPLING METHOD
SAMPLED BY D. Powell DATE SAMPLED 9-24-78
CONTAINER TYPE SAMPLE VOLUME
SAMPLE MATRIX

LOG REMARKS fraction 1 consumed in previous analysis

ANALYTICAL DATA

DATE REPORT DUE

SAMPLE NO.	PARAMETERS	ANALYTICAL METHOD	VALUES	DATE OF ANALYSIS	REMARKS
-2	Pb	Atomic Absorption	415 µg	4-27-79	probe rinse
-3	"	"	8 µg	"	imp 1,2

SAMPLE INFORMATION
FOR LABORATORY OPERATIONS

DATE RECEIVED 10-1-78 LAB NO. 299

SAMPLING DATA

GEOGRAPHICAL ORIGIN Asarco - Tacoma
SAMPLING LOCATION Arsenic Baghouse outlet
SAMPLE TYPE
SAMPLE NUMBERS AA-ABO-2
SAMPLING METHOD
SAMPLED BY D. Powell DATE SAMPLED 9-25-78
CONTAINER TYPE SAMPLE VOLUME
SAMPLE MATRIX

LOG REMARKS fractions 1, consumed in previous analysis

ANALYTICAL DATA

DATE REPORT DUE

SAMPLE NO.	PARAMETERS	ANALYTICAL METHOD	VALUES	DATE OF ANALYSIS	REMARKS
-2	Pb	Atomic Absorption	119 µg	4-27-79	probe rinse
-4	↓	↓	3 µg	↓	imp 1,2 - HNO_3 rinse
-5	↓	↓	2 µg	↓	imp 1,2
-3	↓	↓	35 µg	↓	probe rinse - HNO_3

SAMPLE INFORMATION
FOR LABORATORY OPERATIONS

DATE RECEIVED 10-1-78 LAB NO. 300

SAMPLING DATA

GEOGRAPHICAL ORIGIN Asarco - Tacoma
SAMPLING LOCATION Arsenic Baghse outlet
SAMPLE TYPE
SAMPLE NUMBERS AA-ABO-3
SAMPLING METHOD
SAMPLED BY D. Powell DATE SAMPLED 9-25-78
CONTAINER TYPE SAMPLE VOLUME
SAMPLE MATRIX

LOG REMARKS fraction 1 consumed in previous analysis

ANALYTICAL DATA

DATE REPORT DUE

SAMPLE NO.	PARAMETERS	ANALYTICAL METHOD	VALUES	DATE OF ANALYSIS	REMARKS
-1	Pb	Atomic Absorption	610 µg	4-27-79	probe rinse
-2	"	"	4 µg	"	imp 1,2

SAMPLE INFORMATION
FOR LABORATORY OPERATIONS

DATE RECEIVED 10-1-78 LAB NO. 301

SAMPLING DATA

GEOGRAPHICAL ORIGIN Asarco - Tacoma
SAMPLING LOCATION Metallic Arsenic
SAMPLE TYPE
SAMPLE NUMBERS AA-MA-1
SAMPLING METHOD
SAMPLED BY D. Powell DATE SAMPLED 9-24-78
CONTAINER TYPE SAMPLE VOLUME
SAMPLE MATRIX

LOG REMARKS fraction 1 consumed in previous analysis

ANALYTICAL DATA

DATE REPORT DUE

SAMPLE NO.	PARAMETERS	ANALYTICAL METHOD	VALUES	DATE OF ANALYSIS	REMARKS
-2	Pb	Atomic Absorption	244 µg	4-27-79	probe rinse
-3	"	"	2 µg	"	imp 1,2

SAMPLE INFORMATION
FOR LABORATORY OPERATIONS

DATE RECEIVED 10-1-78 LAB NO. 302

SAMPLING DATA

GEOGRAPHICAL ORIGIN Asarco - Tacoma
SAMPLING LOCATION Metallic Arsenic
SAMPLE TYPE
SAMPLE NUMBERS AA-MA-2
SAMPLING METHOD
SAMPLED BY D. Powell DATE SAMPLED 9-25-78
CONTAINER TYPE SAMPLE VOLUME
SAMPLE MATRIX

LOG REMARKS fractions 1, 2 consumed in previous analysis

ANALYTICAL DATA

DATE REPORT DUE

SAMPLE NO.	PARAMETERS	ANALYTICAL METHOD	VALUES	DATE OF ANALYSIS	REMARKS
-3	Pb	Atomic Absorption	1100 μg	4-27-79	probe rinse (not available)
-4	↓	↓	75 μg	↓	probe HNO_3 rinse
-5	↓	↓	3 μg	↓	imp 1, 2 HNO_3 rinse
-6	↓	↓	9 μg	↓	imp 1, 2 rinse

SAMPLE INFORMATION
FOR LABORATORY OPERATIONS

DATE RECEIVED 10-1-78 LAB NO. 303

SAMPLING DATA

GEOGRAPHICAL ORIGIN Asarco - Tacoma
SAMPLING LOCATION Metallic Arsenic
SAMPLE TYPE
SAMPLE NUMBERS AA-MA-3
SAMPLING METHOD
SAMPLED BY D. Powell DATE SAMPLED 9-25-78
CONTAINER TYPE SAMPLE VOLUME
SAMPLE MATRIX

LOG REMARKS fraction 1 consumed in previous analysis

ANALYTICAL DATA

DATE REPORT DUE

SAMPLE NO.	PARAMETERS	ANALYTICAL METHOD	VALUES	DATE OF ANALYSIS	REMARKS
-2	Pb	Atomic Absorption	132 µg	4-27-79	probe rinse
-3	"		10 µg	"	imp 1,2

SAMPLE INFORMATION
FOR LABORATORY OPERATIONS

DATE RECEIVED 10-1-78 LAB NO. 304

SAMPLING DATA

GEOGRAPHICAL ORIGIN Asarco – Tacoma
SAMPLING LOCATION conv. slag return
SAMPLE TYPE
SAMPLE NUMBERS AA-CSR-1
SAMPLING METHOD
SAMPLED BY D. Powell DATE SAMPLED 9-22-78
CONTAINER TYPE SAMPLE VOLUME
SAMPLE MATRIX

LOG REMARKS fraction 1 consumed in previous analysis

ANALYTICAL DATA

DATE REPORT DUE

SAMPLE NO.	PARAMETERS	ANALYTICAL METHOD	VALUES	DATE OF ANALYSIS	REMARKS
-2	Pb	Atomic Absorption	267 µg	4-27-79	probe rinse
-3	"	"	2 µg	"	imp 1,2

SAMPLE INFORMATION
FOR LABORATORY OPERATIONS

DATE RECEIVED 11-20-78 LAB NO. 308

SAMPLING DATA

GEOGRAPHICAL ORIGIN Kennecott - Magma
SAMPLING LOCATION Dryer outlet
SAMPLE TYPE
SAMPLE NUMBERS KC-DR-1
SAMPLING METHOD
SAMPLED BY D. Powell DATE SAMPLED 11-14-78
CONTAINER TYPE SAMPLE VOLUME
SAMPLE MATRIX

LOG REMARKS

ANALYTICAL DATA

DATE REPORT DUE

SAMPLE NO.	PARAMETERS	ANALYTICAL METHOD	VALUES	DATE OF ANALYSIS	REMARKS
-1	Pb	Atomic Absorption	1100 µg	4-27-79	filter
-2	↓	↓	758 µg	↓	probe rinse
-3	↓	↓	4 µg	↓	imp 1,2

SAMPLE INFORMATION
FOR LABORATORY OPERATIONS

DATE RECEIVED 11-20-78 LAB NO. 309

SAMPLING DATA

GEOGRAPHICAL ORIGIN Kennecott — Magna
SAMPLING LOCATION Dryer outlet
SAMPLE TYPE
SAMPLE NUMBERS KC-DR-2
SAMPLING METHOD
SAMPLED BY D. Powell DATE SAMPLED 11-14-78
CONTAINER TYPE SAMPLE VOLUME
SAMPLE MATRIX

LOG REMARKS

ANALYTICAL DATA

DATE REPORT DUE

SAMPLE NO.	PARAMETERS	ANALYTICAL METHOD	VALUES	DATE OF ANALYSIS	REMARKS
-1	Pb	Atomic Absorption	890 µg	4-27-79	filter
-2	↓	↓	321 µg	↓	probe rinse
-3	↓	↓	2 µg	↓	imp 1,2

SAMPLE INFORMATION
FOR LABORATORY OPERATIONS

DATE RECEIVED 11-20-78 LAB NO. 310

SAMPLING DATA

GEOGRAPHICAL ORIGIN Kennecott - Magma
SAMPLING LOCATION Dryer outlet
SAMPLE TYPE
SAMPLE NUMBERS KC-DR-3
SAMPLING METHOD
SAMPLED BY D. Powell DATE SAMPLED 11-14-78
CONTAINER TYPE SAMPLE VOLUME
SAMPLE MATRIX

LOG REMARKS

ANALYTICAL DATA

DATE REPORT DUE

SAMPLE NO.	PARAMETERS	ANALYTICAL METHOD	VALUES	DATE OF ANALYSIS	REMARKS
-1	Pb	Atomic Absorption	1400 µg	4-27-79	filter
-2	↓	↓	507 µg	↓	probe rinse
-3	↓	↓	5 µg	↓	imp 1-2
-5	↓	↓	27 µg	↓	flexline rinse acetone

SAMPLE INFORMATION
FOR LABORATORY OPERATIONS

DATE RECEIVED 11-20-78 LAB NO. 311

SAMPLING DATA

GEOGRAPHICAL ORIGIN Kennecott - Magna
SAMPLING LOCATION Matte tapping
SAMPLE TYPE
SAMPLE NUMBERS
SAMPLING METHOD KC-MT-1
SAMPLED BY D. Powell DATE SAMPLED 11-1-77
CONTAINER TYPE SAMPLE VOLUME
SAMPLE MATRIX

LOG REMARKS

ANALYTICAL DATA

DATE REPORT DUE

SAMPLE NO.	PARAMETERS	ANALYTICAL METHOD	VALUES	DATE OF ANALYSIS	REMARKS
-1	Pb	Atomic Absorption	16,300 µg	4-27-79	filter
-2	↓	↓	600 µg	↓	probe rinse
-3	↓	↓	1 µg	↓	imp 1,2

SAMPLE INFORMATION
FOR LABORATORY OPERATIONS

DATE RECEIVED 11-20-78 LAB NO. 312

SAMPLING DATA

GEOGRAPHICAL ORIGIN Kennecott - Magma
SAMPLING LOCATION Matte tapping
SAMPLE TYPE
SAMPLE NUMBERS KC-MT-2
SAMPLING METHOD
SAMPLED BY D. Powell DATE SAMPLED 11-1-78
CONTAINER TYPE SAMPLE VOLUME
SAMPLE MATRIX

LOG REMARKS

ANALYTICAL DATA

DATE REPORT DUE

SAMPLE NO.	PARAMETERS	ANALYTICAL METHOD	VALUES	DATE OF ANALYSIS	REMARKS
-1	Pb	Atomic Absorption	6650 µg	4-27-79	filter
-2	↓	↓	816 µg	↓	probe rinse
-3	↓	↓	4 µg	↓	imp 1,2

SAMPLE INFORMATION
FOR LABORATORY OPERATIONS

DATE RECEIVED 11-20-78 LAB NO. 313

SAMPLING DATA

GEOGRAPHICAL ORIGIN Kennecott-Magma
SAMPLING LOCATION matte tapping
SAMPLE TYPE
SAMPLE NUMBERS KC-MT-3
SAMPLING METHOD
SAMPLED BY D. Powell DATE SAMPLED 11-3-78
CONTAINER TYPE SAMPLE VOLUME
SAMPLE MATRIX

LOG REMARKS

ANALYTICAL DATA

DATE REPORT DUE

SAMPLE NO.	PARAMETERS	ANALYTICAL METHOD	VALUES	DATE OF ANALYSIS	REMARKS
-1	Pb	Atomic Absorption	9850 µg	4-27-79	filter
-2	↓	↓	679 µg	↓	probe rinse
-3	↓	↓	2 µg	↓	imp 1, 2

SAMPLE INFORMATION
FOR LABORATORY OPERATIONS

DATE RECEIVED 11-20-78 LAB NO. 314

SAMPLING DATA

GEOGRAPHICAL ORIGIN Kennecott - Magna
SAMPLING LOCATION Slag tarpile
SAMPLE TYPE
SAMPLE NUMBERS KC-ST-1
SAMPLING METHOD
SAMPLED BY D. Powell DATE SAMPLED 11-1-78
CONTAINER TYPE SAMPLE VOLUME
SAMPLE MATRIX

LOG REMARKS

ANALYTICAL DATA

DATE REPORT DUE

SAMPLE NO.	PARAMETERS	ANALYTICAL METHOD	VALUES	DATE OF ANALYSIS	REMARKS
-1	Pb	Atomic Absorption	275 µg	4-27-79	filter
-2	↓	↓	111 µg	↓	probe rinse
-3	↓	↓	8 µg	↓	imp 1,2

SAMPLE INFORMATION
FOR LABORATORY OPERATIONS

DATE RECEIVED 11-20-78 LAB NO. 315

SAMPLING DATA

GEOGRAPHICAL ORIGIN Kennecott-Magma
SAMPLING LOCATION Slag tapping
SAMPLE TYPE
SAMPLE NUMBERS KC-ST-2
SAMPLING METHOD
SAMPLED BY D. Powell DATE SAMPLED 11-2-78
CONTAINER TYPE SAMPLE VOLUME
SAMPLE MATRIX

LOG REMARKS

ANALYTICAL DATA

DATE REPORT DUE

SAMPLE NO.	PARAMETERS	ANALYTICAL METHOD	VALUES	DATE OF ANALYSIS	REMARKS
-1	Pb	Atomic Absorption	2080 µg	4-27-79	filter
-2	↓	↓	222 µg	↓	probe rinse
-3	↓	↓	6 µg	↓	imp 1,2

SAMPLE INFORMATION
FOR LABORATORY OPERATIONS

DATE RECEIVED 11-20-78 LAB NO. 317

SAMPLING DATA

GEOGRAPHICAL ORIGIN Kennecott - Magma
SAMPLING LOCATION converter duct
SAMPLE TYPE
SAMPLE NUMBERS KC-CD-1
SAMPLING METHOD
SAMPLED BY D. Powell DATE SAMPLED 11-6-78
CONTAINER TYPE SAMPLE VOLUME
SAMPLE MATRIX

LOG REMARKS

ANALYTICAL DATA

DATE REPORT DUE

SAMPLE NO.	PARAMETERS	ANALYTICAL METHOD	VALUES	DATE OF ANALYSIS	REMARKS
-1	Pb	Atomic Absorption	10,600 µg	4-27-79	filter
-2	↓	↓	1730 µg	↓	probe rinse
-3	↓	↓	3 µg	↓	imp 1,2

SAMPLE INFORMATION
FOR LABORATORY OPERATIONS

DATE RECEIVED 11-20-78 LAB NO. 318

SAMPLING DATA

GEOGRAPHICAL ORIGIN Kennecott - Magna
SAMPLING LOCATION conv. duct
SAMPLE TYPE
SAMPLE NUMBERS KC-CD-2
SAMPLING METHOD
SAMPLED BY D. Powell DATE SAMPLED 11-[illegible]-78
CONTAINER TYPE SAMPLE VOLUME
SAMPLE MATRIX

LOG REMARKS

ANALYTICAL DATA

DATE REPORT DUE

SAMPLE NO.	PARAMETERS	ANALYTICAL METHOD	VALUES	DATE OF ANALYSIS	REMARKS
-1	Pb	Atomic Absorption	10,200 µg	4-27-79	filter
-2	↓	↓	3,600 µg	↓	probe rinse
-3	↓	↓	1250 µg	↓	imp 1,2

SAMPLE INFORMATION
FOR LABORATORY OPERATIONS

DATE RECEIVED 11-20-78 LAB NO. 319

SAMPLING DATA

GEOGRAPHICAL ORIGIN Kennecott - Magma
SAMPLING LOCATION conv. duct
SAMPLE TYPE
SAMPLE NUMBERS KC-CD-3
SAMPLING METHOD
SAMPLED BY D. Powell DATE SAMPLED 11-9-78
CONTAINER TYPE SAMPLE VOLUME
SAMPLE MATRIX

LOG REMARKS

ANALYTICAL DATA

DATE REPORT DUE

SAMPLE NO.	PARAMETERS	ANALYTICAL METHOD	VALUES	DATE OF ANALYSIS	REMARKS
-1	Pb	Atomic Absorption	1560 µg	4-27-79	Filter
-2	↓	↓	4560 µg	↓	Probe rinse
-3	↓	↓	5 µg	↓	imp 1,2

SAMPLE INFORMATION
FOR LABORATORY OPERATIONS

DATE RECEIVED 11-20-78 LAB NO. 320

SAMPLING DATA

GEOGRAPHICAL ORIGIN Kennecott - Magma
SAMPLING LOCATION Acid Plant inlet
SAMPLE TYPE
SAMPLE NUMBERS KC-AI-1
SAMPLING METHOD
SAMPLED BY D. Powell DATE SAMPLED 11-6-78
CONTAINER TYPE SAMPLE VOLUME
SAMPLE MATRIX

LOG REMARKS

ANALYTICAL DATA

DATE REPORT DUE

SAMPLE NO.	PARAMETERS	ANALYTICAL METHOD	VALUES	DATE OF ANALYSIS	REMARKS
-1	Pb	Atomic Absorption	2900 µg	4-27-79	filter
-2	↓	↓	27,500 µg	↓	probe rinse
-3	↓	↓	4 µg	↓	imp 1,2.

SAMPLE INFORMATION
FOR LABORATORY OPERATIONS

DATE RECEIVED 11-20-78 LAB NO. 321

SAMPLING DATA

GEOGRAPHICAL ORIGIN Kennecott- Alaska
SAMPLING LOCATION Acid Plant
SAMPLE TYPE
SAMPLE NUMBERS KC-A1-2
SAMPLING METHOD
SAMPLED BY D. Powell DATE SAMPLED 11-3-78
CONTAINER TYPE SAMPLE VOLUME
SAMPLE MATRIX

LOG REMARKS

ANALYTICAL DATA

DATE REPORT DUE

SAMPLE NO.	PARAMETERS	ANALYTICAL METHOD	VALUES	DATE OF ANALYSIS	REMARKS
-1	Pb	Atomic Absorption	1600 µg	4-27-79	filter
-2	↓	↓	46,600 µg	↓	probe rinse
-3	↓	↓	2 µg	↓	imp 1,2

SAMPLE INFORMATION
FOR LABORATORY OPERATIONS

DATE RECEIVED 11-20-78 LAB NO. 322

SAMPLING DATA

GEOGRAPHICAL ORIGIN Kennecott - Magma
SAMPLING LOCATION Acid Plant inlet
SAMPLE TYPE
SAMPLE NUMBERS KC-AI-1
SAMPLING METHOD
SAMPLED BY D. Powell DATE SAMPLED 11-8-78
CONTAINER TYPE SAMPLE VOLUME
SAMPLE MATRIX

LOG REMARKS

ANALYTICAL DATA

DATE REPORT DUE

SAMPLE NO.	PARAMETERS	ANALYTICAL METHOD	VALUES	DATE OF ANALYSIS	REMARKS
-1	Pb	Atomic Absorption	1350 µg	4-27-79	filter
-2	↓	↓	54,400 µg	↓	probe rinse
-3	↓	↓	103 µg	↓	imp 1-2

SAMPLE INFORMATION
FOR LABORATORY OPERATIONS

DATE RECEIVED 11-20-78 LAB NO. 323

SAMPLING DATA

GEOGRAPHICAL ORIGIN Kennecott - Magma
SAMPLING LOCATION conv. roll-out
SAMPLE TYPE
SAMPLE NUMBERS KC-CRO-1
SAMPLING METHOD
SAMPLED BY D. Powell DATE SAMPLED 11-6-78
CONTAINER TYPE SAMPLE VOLUME
SAMPLE MATRIX

LOG REMARKS

ANALYTICAL DATA

DATE REPORT DUE

SAMPLE NO.	PARAMETERS	ANALYTICAL METHOD	VALUES	DATE OF ANALYSIS	REMARKS
-1	Pb	Atomic Absorption	3260 µg	4-27-79	filter
-2	↓	↓	511 µg	↓	probe rinse
-3	↓	↓	5 µg	↓	imp 1,2

SAMPLE INFORMATION
FOR LABORATORY OPERATIONS

DATE RECEIVED 11-20-78 LAB NO. 324

SAMPLING DATA

GEOGRAPHICAL ORIGIN Kennecott - Magma
SAMPLING LOCATION conv. roll-out
SAMPLE TYPE
SAMPLE NUMBERS KC-CRO-2
SAMPLING METHOD
SAMPLED BY D. Powell DATE SAMPLED 11-8-78
CONTAINER TYPE SAMPLE VOLUME
SAMPLE MATRIX

LOG REMARKS

ANALYTICAL DATA

DATE REPORT DUE

SAMPLE NO.	PARAMETERS	ANALYTICAL METHOD	VALUES	DATE OF ANALYSIS	REMARKS
-1	Pb	Atomic Absorption	5150 µg		filter
-2	↓	↓	1110 µg		probe rinse
-3	↓	↓	3 µg		imp 1, 2

SAMPLE INFORMATION
FOR LABORATORY OPERATIONS

DATE RECEIVED 11-20-78 LAB NO. 325

SAMPLING DATA

GEOGRAPHICAL ORIGIN Kennecott - Magma
SAMPLING LOCATION Dryer
SAMPLE TYPE process
SAMPLE NUMBERS
SAMPLING METHOD grab
SAMPLED BY Kennecott personnel DATE SAMPLED 11-9, 14-78
CONTAINER TYPE SAMPLE VOLUME
SAMPLE MATRIX

LOG REMARKS

ANALYTICAL DATA

DATE REPORT DUE

SAMPLE NO.	PARAMETERS	ANALYTICAL METHOD	VALUES	DATE OF ANALYSIS	REMARKS
-1	Pb	Atomic Absorption	0.101%	4-27-79	11-9-78 Before Dryer
-2	↓	↓	0.076%	↓	11-9-78 After Dryer
-3	↓	↓	0.084%	↓	11-14-78 Before Dryer - 1st test
-4	↓	↓	0.077%	↓	11-14-78 After Dryer - 1st test
-5	↓	↓	0.079%	↓	11-14-78 Before Dryer - 2nd test
-6	↓	↓	0.082%	↓	11-14-78 After Dryer - 2nd test

SAMPLE INFORMATION
FOR LABORATORY OPERATIONS

DATE RECEIVED 11-20-78 LAB NO. 326

SAMPLING DATA

GEOGRAPHICAL ORIGIN Kennecott - Magma
SAMPLING LOCATION conv. #1, #2
SAMPLE TYPE finish copper
SAMPLE NUMBERS
SAMPLING METHOD grab
SAMPLED BY Kennecott personnel DATE SAMPLED 11-6, 7, 8-78
CONTAINER TYPE SAMPLE VOLUME
SAMPLE MATRIX

LOG REMARKS

ANALYTICAL DATA

DATE REPORT DUE

SAMPLE NO.	PARAMETERS	ANALYTICAL METHOD	VALUES	DATE OF ANALYSIS	REMARKS
-1	Pb	Atomic Absorption	0.229%	4-27-79	11-6-78 conv. #1
-2	↓	↓	0.365%	↓	11-6-78 conv. #2
-3	↓	↓	0.808%	↓	11-7-78 conv. #1
-4	↓	↓	0.023%	↓	11-7-78 conv. #2
-5	↓	↓	0.585%	↓	11-8-78 conv. #1
-6	↓	↓	0.362%	↓	11-8-78 conv. #2

SAMPLE INFORMATION
FOR LABORATORY OPERATIONS

DATE RECEIVED 11-20-78 LAB NO. 327

SAMPLING DATA

GEOGRAPHICAL ORIGIN Kennecott - Magma
SAMPLING LOCATION Furnace
SAMPLE TYPE Process
SAMPLE NUMBERS
SAMPLING METHOD grab
SAMPLED BY Kennecott personnel DATE SAMPLED 11-1,2,3,7-78
CONTAINER TYPE SAMPLE VOLUME
SAMPLE MATRIX

LOG REMARKS

ANALYTICAL DATA

DATE REPORT DUE

SAMPLE NO.	PARAMETERS	ANALYTICAL METHOD	VALUES	DATE OF ANALYSIS	REMARKS
-1	Pb	Atomic Absorption	0.185%	4-27-79	#3 Furn. Matte 11-2-78
-2	↓	↓	0.045%	↓	#3 Furn Slag 11-2-78
-3	↓	↓	0.120%	↓	Furnace Matte 11-3-78
-4	↓	↓	0.064%	↓	Furnace Slag 11-3-78
-5	↓	↓	0.105%	↓	Furnace Matte 11-1-78
-6	↓	↓	0.154%	↓	Furnace Slag 11-1-78
-7	↓	↓	0.192%	↓	Furn. Conc. Feed 11-3-78
-8	↓	↓	0.108%	↓	Furn. Conc. Feed 11-2-78
-9	↓	↓	0.027%	↓	Finished Cu Anode 11-7-78
-10	↓	↓	0.018%	↓	Finished Cu Anode 11-7-78

SAMPLE INFORMATION
FOR LABORATORY OPERATIONS

DATE RECEIVED 11-20-78 LAB NO. 328

SAMPLING DATA

GEOGRAPHICAL ORIGIN Kennecott-Magna
SAMPLING LOCATION cyclone scrubber
SAMPLE TYPE water impinger process particulate
SAMPLE NUMBERS
SAMPLING METHOD grab
SAMPLED BY Kennecott personnel DATE SAMPLED 11-9-78
CONTAINER TYPE SAMPLE VOLUME
SAMPLE MATRIX

LOG REMARKS

ANALYTICAL DATA

DATE REPORT DUE

SAMPLE NO.	PARAMETERS	ANALYTICAL METHOD	VALUES	DATE OF ANALYSIS	REMARKS
-1	Pb	Atomic Absorption	4.4 µg/ml	4-27-79	cyclone scrubber water 11-9-78
-2	↓	↓	28.3 µg/ml	↓	cyclone scrubber water 11-14-78 1st test
-3	↓	↓	10.6 µg/ml	↓	cyclone scrubber water 11-14-78 2nd test

SAMPLE INFORMATION
FOR LABORATORY OPERATIONS

DATE RECEIVED 4-2-79 LAB NO. 359

SAMPLING DATA

GEOGRAPHICAL ORIGIN RTP - EPA
SAMPLING LOCATION roaster. ESP outlet, Asarco, El Paso
SAMPLE TYPE Modified method 5
SAMPLE NUMBERS 1-77-7-7- run A-1, 205992
SAMPLING METHOD EPA As sampling train
SAMPLED BY Monsanto DATE SAMPLED 7/7/77
CONTAINER TYPE glass, polypropylene SAMPLE VOLUME
SAMPLE MATRIX

LOG REMARKS

ANALYTICAL DATA

DATE REPORT DUE

SAMPLE NO.	PARAMETERS	ANALYTICAL METHOD	VALUES	DATE OF ANALYSIS	REMARKS
-1	Pb	Atomic Absorption	1380 µg	4-27-79	Filter - Monsanto digested - 100 ml
-2	↓	↓	1180 µg	↓	probe + cyclone rinse - 1017 ml diluted to 1100 ml
-3	↓	↓	73 µg	↓	imps. 1,2,3 850 ml
-4	↓	↓	12 µg	↓	imps 4 250 ml
-5	↓	↓	13 µg	↓	2nd filter, Monsanto digested 100 ml
-6	↓	↓	10 µg	↓	imp 5 430 ml

SAMPLE INFORMATION
FOR LABORATORY OPERATIONS

DATE RECEIVED 4-2-79 LAB NO. 360

SAMPLING DATA

GEOGRAPHICAL ORIGIN RTP- EPA
SAMPLING LOCATION roaster ESP outlet, Asarco, El Paso
SAMPLE TYPE Modified method 5
SAMPLE NUMBERS 205991 run A-2
SAMPLING METHOD EPA As sampling train
SAMPLED BY Monsanto DATE SAMPLED 6-28-77
CONTAINER TYPE glass, polypropylene SAMPLE VOLUME
SAMPLE MATRIX

LOG REMARKS

ANALYTICAL DATA

DATE REPORT DUE

SAMPLE NO.	PARAMETERS	ANALYTICAL METHOD	VALUES	DATE OF ANALYSIS	REMARKS
-1	Pb	Atomic Absorption	835 µg	4-27-79	Front filter, Monsanto digested, 100 ml
-2	↓	↓	-	↓	no probe rinse available
-3	↓	↓	25 µg	↓	imp. 1, 2, 3 890 ml
-4	↓	↓	10 µg	↓	imp 4 250 ml
-5	↓	↓	5 µg	↓	second filter, Monsanto digested, 100 ml
-6	↓	↓	8 µg	↓	imp 5 250 ml

SAMPLE INFORMATION
FOR LABORATORY OPERATIONS

DATE RECEIVED 4-2-79 LAB NO. 361

SAMPLING DATA

GEOGRAPHICAL ORIGIN RTP - EPA
SAMPLING LOCATION roaster ESP outlet
SAMPLE TYPE Modified method 5
SAMPLE NUMBERS 205991-2 run A-3
SAMPLING METHOD EPA As sampling train
SAMPLED BY Monsanto DATE SAMPLED 6-27-79
CONTAINER TYPE glass, polypropylene SAMPLE VOLUME
SAMPLE MATRIX

LOG REMARKS

ANALYTICAL DATA

DATE REPORT DUE

SAMPLE NO.	PARAMETERS	ANALYTICAL METHOD	VALUES	DATE OF ANALYSIS	REMARKS
-1	Pb	Atomic Absorption	226 µg	4-27-79	first filter - 100ml Monsanto digested
-2	↓	↓	4260 µg	↓	probe rinse 1000ml
-3	↓	↓	59 µg	↓	imp 1,2,3 1000ml
-4	↓	↓	5 µg	↓	imp 4 500ml
-5	↓	↓	17 µg	↓	second filter - 100ml Monsanto digested
-6	↓	↓	18 µg	↓	imp 5 500ml

SAMPLE INFORMATION
FOR LABORATORY OPERATIONS

DATE RECEIVED 4-2-79 LAB NO. 362

SAMPLING DATA

GEOGRAPHICAL ORIGIN RTP - EPA
SAMPLING LOCATION roaster - Asarco, El Paso
SAMPLE TYPE Modified method 5
SAMPLE NUMBERS 205979 run #1
SAMPLING METHOD EPA As sampling train
SAMPLED BY Monsanto DATE SAMPLED 6/26/77
CONTAINER TYPE glass and polypropylene SAMPLE VOLUME
SAMPLE MATRIX

LOG REMARKS

ANALYTICAL DATA

DATE REPORT DUE

SAMPLE NO.	PARAMETERS	ANALYTICAL METHOD	VALUES	DATE OF ANALYSIS	REMARKS
-1	Pb	Atomic Absorption	940 µg	4-27-79	filter - TRW digest in 50 ml
-2	↓	↓	3390 µg	↓	probe rinse 1250 ml
-3	↓	↓	620 µg	↓	imp 1,2,3 1000 ml
-4	↓	↓	60 µg	↓	imp 4 500 ml
-5	↓	↓	39 µg	↓	second filter - Monsanto digested 100 ml
-6	↓	↓	407 µg	↓	imp 5 250 ml
-7	↓	↓	0.013%	↓	cyclone catch gms total

SAMPLE INFORMATION
FOR LABORATORY OPERATIONS

DATE RECEIVED 4-2-79 LAB NO. 363

SAMPLING DATA

GEOGRAPHICAL ORIGIN RTP- EPA
SAMPLING LOCATION roaster, Asarco El Paso
SAMPLE TYPE Modified method 5
SAMPLE NUMBERS 205994 run 62
SAMPLING METHOD EPA As sampling train
SAMPLED BY Monsanto DATE SAMPLED 6-27-77
CONTAINER TYPE glass and polypropylene SAMPLE VOLUME
SAMPLE MATRIX

LOG REMARKS

ANALYTICAL DATA

DATE REPORT DUE

SAMPLE NO.	PARAMETERS	ANALYTICAL METHOD	VALUES	DATE OF ANALYSIS	REMARKS
-1	Pb	Atomic Absorption	2150 µg		first filter, Monsanto digested, 100 ml
-2	↓	↓	9240 µg		probe rinse 1100 ml
-3	↓	↓	510 µg		imp 1,2,3 1000 ml
-4	↓	↓	9 µg		imp 4 250 ml
-5	↓	↓	22 µg		second filter Monsanto digested 100 ml
-6	↓	↓	14 µg		imp 5 250 ml
-7	↓	↓	0.012%		cyclone catch gms total

SAMPLE INFORMATION
FOR LABORATORY OPERATIONS

DATE RECEIVED 4-2-79 LAB NO. 364

SAMPLING DATA

GEOGRAPHICAL ORIGIN RTP-EPA
SAMPLING LOCATION roaster, Asarco El Paso
SAMPLE TYPE Modified method 5
SAMPLE NUMBERS 205995 run C-3
SAMPLING METHOD EPA As sampling train
SAMPLED BY Monsanto DATE SAMPLED 7-7-77
CONTAINER TYPE glass and polypropylene SAMPLE VOLUME
SAMPLE MATRIX

LOG REMARKS

ANALYTICAL DATA

DATE REPORT DUE

SAMPLE NO.	PARAMETERS	ANALYTICAL METHOD	VALUES	DATE OF ANALYSIS	REMARKS
-1	Pb	Atomic Absorption	5750 µg		front filter, Monsanto digested 100 ml
-2	↓	↓	11,400 µg		probe rinse 1350 ml
-3			720 µg		imp 1,2,3 1000 ml
-4			14 µg		imp 4 250 ml
-5			30 µg		back filter, Monsanto digest, 100 ml
-6			21 µg		imp 5 250 ml
-7	↓	↓	0.138%		cyclone catch gms total

SAMPLE INFORMATION
FOR LABORATORY OPERATIONS

DATE RECEIVED 4-2-79 LAB NO. 365

SAMPLING DATA

GEOGRAPHICAL ORIGIN RTP - EPA
SAMPLING LOCATION inlet of acid plant - Asarco, El Paso
SAMPLE TYPE Modified method 5
SAMPLE NUMBERS run D-1
SAMPLING METHOD EPA As sampling train
SAMPLED BY Monsanto DATE SAMPLED 6-21-77
CONTAINER TYPE SAMPLE VOLUME
SAMPLE MATRIX

LOG REMARKS

ANALYTICAL DATA

DATE REPORT DUE

SAMPLE NO.	PARAMETERS	ANALYTICAL METHOD	VALUES	DATE OF ANALYSIS	REMARKS
-1	Pb	Atomic Absorption	8480 µg		front (3) filters, TRW digested in 50ml
-2	↓	↓	45,900 µg		probe rinse 1250 ml
-3	↓	↓	5 µg		Imp 1,2,3 1000 ml
-4	↓	↓	80 µg		imp 4 250 ml
-5	↓	↓	8450 µg		back filter, TRW digested in 50ml
-6	↓	↓	4 µg		imp 5 500 ml
-7	↓	↓	0.040%		cyclone catch gms total

SAMPLE INFORMATION
FOR LABORATORY OPERATIONS

DATE RECEIVED 4-2-79 LAB NO. 366

SAMPLING DATA

GEOGRAPHICAL ORIGIN RTP - EPA
SAMPLING LOCATION Acid Plant Inlet - Asarco El Paso
SAMPLE TYPE Modified method 5
SAMPLE NUMBERS 205995 run D-3
SAMPLING METHOD EPA 5 sampling train
SAMPLED BY Monsanto DATE SAMPLED 6-22-79
CONTAINER TYPE glass and polypropylene SAMPLE VOLUME
SAMPLE MATRIX

LOG REMARKS

ANALYTICAL DATA

DATE REPORT DUE

SAMPLE NO.	PARAMETERS	ANALYTICAL METHOD	VALUES	DATE OF ANALYSIS	REMARKS
-1	Pb	Atomic Absorption	2390 µg	4-27-79	first filter - TRN digested 50 ml
-2	↓	↓	8560 µg	↓	probe rinse 1000 ml
-3	↓	↓	1160 µg	↓	imp 1,2,3 1000 ml
-4	↓	↓	410 µg	↓	imp 4 250 ml
-5	↓	↓	61 µg	↓	back filter - Monsanto digested 100 ml
-6	↓	↓	1 µg	↓	imp 5 250 ml
-7	↓	↓	0.390%	↓	cyclone catch gms total

SAMPLE INFORMATION
FOR LABORATORY OPERATIONS

DATE RECEIVED 4-2-79 LAB NO. 367

SAMPLING DATA

GEOGRAPHICAL ORIGIN RTP - EPA
SAMPLING LOCATION Acid Plant Inlet - Asarco El Paso
SAMPLE TYPE Modified method 5
SAMPLE NUMBERS 205995 run D-2
SAMPLING METHOD EPA As sampling
SAMPLED BY Monsanto DATE SAMPLED 6-22-77
CONTAINER TYPE glass and polypropylene SAMPLE VOLUME
SAMPLE MATRIX

LOG REMARKS

ANALYTICAL DATA

DATE REPORT DUE

SAMPLE NO.	PARAMETERS	ANALYTICAL METHOD	VALUES	DATE OF ANALYSIS	REMARKS
-1	Pb	Atomic Absorption	3160 µg		front filter - tRW digested in 50 ml
-2	↓	↓	13,000 µg		probe rinse 1000 ml
-3			2220 µg		imp 1,2,3 1000 ml
-4			42 µg		imp 4 500 ml
-5			10,800 µg		back filter - Monsanto digested 100 ml
-6			393 µg		imp 5 250 ml
-7	↓	↓	0.362%		cyclone catch gms total

SAMPLE INFORMATION
FOR LABORATORY OPERATIONS

DATE RECEIVED 4-2-79 LAB NO. 368

SAMPLING DATA

GEOGRAPHICAL ORIGIN RTP - EPA
SAMPLING LOCATION outlet of acid Plant - Asarco, El Paso
SAMPLE TYPE Modified method 5
SAMPLE NUMBERS 205996 run E-1
SAMPLING METHOD EPA As sampling train
SAMPLED BY Monsanto DATE SAMPLED 6-21-77
CONTAINER TYPE glass and polypropylene SAMPLE VOLUME
SAMPLE MATRIX

LOG REMARKS

ANALYTICAL DATA

DATE REPORT DUE

SAMPLE NO.	PARAMETERS	ANALYTICAL METHOD	VALUES	DATE OF ANALYSIS	REMARKS
-1	Pb	Atomic Absorption	8 µg	4-27-79	front filter - Monsanto digested, 100 ml
-2	↓	↓	1770 µg	↓	probe rinse 500 ml
-3	↓	↓	17 µg	↓	imp 1,2,3 1000 ml
-4	↓	↓	9 µg	↓	imp 4 500 ml
-5	↓	↓	9 µg	↓	back filter - Monsanto digested, 100 ml
-6	↓	↓	6 µg	↓	imp 5 250 ml

SAMPLE INFORMATION
FOR LABORATORY OPERATIONS

DATE RECEIVED 4-2-79 LAB NO. 369

SAMPLING DATA

GEOGRAPHICAL ORIGIN RTP- EPA
SAMPLING LOCATION outlet of Acid Plant - Asarco, El Paso
SAMPLE TYPE Modified method 5
SAMPLE NUMBERS 205996 run E-2
SAMPLING METHOD EPA As sampling train
SAMPLED BY Monsanto DATE SAMPLED 6-22-77
CONTAINER TYPE SAMPLE VOLUME
SAMPLE MATRIX

LOG REMARKS

ANALYTICAL DATA

DATE REPORT DUE

SAMPLE NO.	PARAMETERS	ANALYTICAL METHOD	VALUES	DATE OF ANALYSIS	REMARKS
-1	Pb	Atom. C. Absorption	6 µg		front filter - Monsanto digested 100ml
-2			1760 µg		probe rinse 500ml
-3			36 µg		imp 1,2,3 1000ml
-4			7 µg		imp 4 250ml
-5					none available Back Filter
-6			11 µg		imp 5 250ml

SAMPLE INFORMATION
FOR LABORATORY OPERATIONS

DATE RECEIVED 4-2-79 LAB NO. 370

SAMPLING DATA

GEOGRAPHICAL ORIGIN RTP- EPA
SAMPLING LOCATION outlet of Acid Plant - Asarco El Paso
SAMPLE TYPE Modified method 5
SAMPLE NUMBERS 205996 run E-3
SAMPLING METHOD EPA As sampling train
SAMPLED BY Monsanto DATE SAMPLED 6-23-77
CONTAINER TYPE glass and polypropylene SAMPLE VOLUME
SAMPLE MATRIX

LOG REMARKS

ANALYTICAL DATA

DATE REPORT DUE

SAMPLE NO.	PARAMETERS	ANALYTICAL METHOD	VALUES	DATE OF ANALYSIS	REMARKS
-1	Pb	Atomic Absorption	5 µg	4-27-79	front filter - Monsanto digested 100 ml
-2	↓	↓	3030 µg	↓	probe rinse 500 ml
-3	↓	↓	50 µg	↓	imp 1,2,3 1000 ml
-4	↓	↓	5 µg	↓	imp 4 250 ml
-5	↓	↓		↓	none available
-6	↓	↓	4 µg	↓	imp 5 250 ml

SAMPLE INFORMATION
FOR LABORATORY OPERATIONS

DATE RECEIVED 4-2-79 LAB NO. 371

SAMPLING DATA

GEOGRAPHICAL ORIGIN RTP-EPA
SAMPLING LOCATION [illegible] of Acid Plant - Asarco El Paso
SAMPLE TYPE Modified method 5
SAMPLE NUMBERS 205996 run [illegible]
SAMPLING METHOD EPA As sampling train
SAMPLED BY Monsanto DATE SAMPLED 6-23-77
CONTAINER TYPE glass + polypropylene SAMPLE VOLUME
SAMPLE MATRIX

LOG REMARKS

ANALYTICAL DATA

DATE REPORT DUE

SAMPLE NO.	PARAMETERS	ANALYTICAL METHOD	VALUES	DATE OF ANALYSIS	REMARKS
-1	Pb	Atomic Absorption	5 µg	4-27-79	front filter - Monsanto digested 100 ml
-2	↓	↓	495 µg	↓	probe rinse 250 ml
-3	↓	↓	25 µg	↓	imp 1,2,3 1000 ml
-4	↓	↓	26 µg	↓	imp 4 250 ml
-5	↓	↓		↓	none available Back filter
-6	↓	↓	6 µg	↓	imp 5 250 ml

SAMPLE INFORMATION
FOR LABORATORY OPERATIONS

DATE RECEIVED 4-2-79 LAB NO. 372

SAMPLING DATA

GEOGRAPHICAL ORIGIN RTP-EPA
SAMPLING LOCATION Reverb - Asarco, El Paso
SAMPLE TYPE Modified method 5
SAMPLE NUMBERS run NB-1
SAMPLING METHOD EPA As Sampling train
SAMPLED BY Monsanto DATE SAMPLED 6-26-77
CONTAINER TYPE glass and polypropylene SAMPLE VOLUME
SAMPLE MATRIX

LOG REMARKS

ANALYTICAL DATA

DATE REPORT DUE

SAMPLE NO.	PARAMETERS	ANALYTICAL METHOD	VALUES	DATE OF ANALYSIS	REMARKS
-1	Pb	Atomic Absorption	630 µg	4-27-79	front filter - TRW digested in 50ml
-2	↓	↓	5150 µg	↓	probe rinse 250ml
-3	↓	↓	360 µg	↓	imp 1,2,3 1000ml
-4	↓	↓	58 µg	↓	imp 4 250ml
-5	↓	↓	460 µg	↓	back filter - Monsanto digested 100ml
-6	↓	↓	50 µg	↓	imp 5 250ml
-7	↓	↓	1.11%	↓	cyclone catch gms total

SAMPLE INFORMATION
FOR LABORATORY OPERATIONS

DATE RECEIVED 4-2-79 LAB NO. 373

SAMPLING DATA

GEOGRAPHICAL ORIGIN RTP - EPA
SAMPLING LOCATION reverb - Asarco, El Paso
SAMPLE TYPE Modified method 5
SAMPLE NUMBERS 205993 run N3-2
SAMPLING METHOD EPA As sampling train
SAMPLED BY Monsanto DATE SAMPLED 7-7-77
CONTAINER TYPE glass and polypropylene SAMPLE VOLUME
SAMPLE MATRIX

LOG REMARKS

ANALYTICAL DATA

DATE REPORT DUE

SAMPLE NO.	PARAMETERS	ANALYTICAL METHOD	VALUES	DATE OF ANALYSIS	REMARKS
-1	Pb	Atomic Absorption	726 µg		front filter - TRW digested in 50ml
-2	↓	↓	2480 µg		probe rinse 1000ml
-3	↓	↓	22 µg		imp 1,2,3 1000ml
-4	↓	↓	3 µg		imp 4 250ml
-5	↓	↓	94 µg		back filter - Monsanto digested 100ml
-6	↓	↓	26 µg		imp 5 250ml
-7	↓	↓	0.142%		cyclone catch gms total

SAMPLE INFORMATION
FOR LABORATORY OPERATIONS

DATE RECEIVED 4-2-79 LAB NO. 374

SAMPLING DATA

GEOGRAPHICAL ORIGIN RTP-EPA
SAMPLING LOCATION reverb - Asarco, El Paso
SAMPLE TYPE Modified method 5
SAMPLE NUMBERS 205993 run NB-3
SAMPLING METHOD EPA As sampling train
SAMPLED BY Monsanto DATE SAMPLED 6-28-77
CONTAINER TYPE Glass + polypropylene SAMPLE VOLUME
SAMPLE MATRIX

LOG REMARKS

ANALYTICAL DATA

DATE REPORT DUE

SAMPLE NO.	PARAMETERS	ANALYTICAL METHOD	VALUES	DATE OF ANALYSIS	REMARKS
-1	Pb	Atomic Absorption	620 µg	4-27-79	front filter - TRW digested in 50ml
-2	↓	↓	2620 µg	↓	probe rinse 750ml
-3	↓	↓	2 µg	↓	imp 1,2,3 1000ml
-4	↓	↓	17 µg	↓	imp 4 250ml
-5	↓	↓	35 µg	↓	back filter - Monsanto digested 100ml
-6	↓	↓		↓	imp 5 none available
-7	↓	↓	0.384%	↓	cyclone catch gms total

SAMPLE INFORMATION
FOR LABORATORY OPERATIONS

DATE RECEIVED 4-2-79 LAB NO. 375

SAMPLING DATA

GEOGRAPHICAL ORIGIN RTP-EPA
SAMPLING LOCATION reverb - Asarco, El Paso
SAMPLE TYPE Modified method 5
SAMPLE NUMBERS 205993 run 5B-1
SAMPLING METHOD EPA As sampling train
SAMPLED BY Monsanto DATE SAMPLED 6-26-77
CONTAINER TYPE SAMPLE VOLUME
SAMPLE MATRIX

LOG REMARKS

ANALYTICAL DATA

DATE REPORT DUE

SAMPLE NO.	PARAMETERS	ANALYTICAL METHOD	VALUES	DATE OF ANALYSIS	REMARKS
-1	Pb	Atomic Absorption	550 µg	4-27-79	front filter - TRW digested in 50ml
-2	↓	↓	4500 µg	↓	probe rinse 500ml
-3	↓	↓	10 µg	↓	imp 1,2,3 1000ml
-4	↓	↓	13 µg	↓	imp 4 250 ml
-5	↓	↓	61 µg	↓	back filter - Monsanto digested in 100ml
-6	↓	↓	29 µg	↓	imp 5 300ml
-7	↓	↓	4.51 µg	↓	cyclone catch

SAMPLE INFORMATION
FOR LABORATORY OPERATIONS

DATE RECEIVED 4-2-79 LAB NO. 376

SAMPLING DATA

GEOGRAPHICAL ORIGIN RTP-EPA
SAMPLING LOCATION Reverb
SAMPLE TYPE Modified method 5
SAMPLE NUMBERS 205993 run 58-2
SAMPLING METHOD EPA As sampling train
SAMPLED BY Monsanto DATE SAMPLED 6-27-77
CONTAINER TYPE SAMPLE VOLUME
SAMPLE MATRIX

LOG REMARKS

ANALYTICAL DATA

DATE REPORT DUE

SAMPLE NO.	PARAMETERS	ANALYTICAL METHOD	VALUES	DATE OF ANALYSIS	REMARKS
-1	Pb	Atomic Absorption	610 µg	4-27-79	front filter-TRW digested in 50ml
-2	↓	↓	210 µg	↓	probe rinse 1000ml
-3	↓	↓	10 µg	↓	imp 1,2,3 1000ml
-4	↓	↓	3 µg	↓	imp 4 250ml
-5	↓	↓	410 µg	↓	back filter-Monsanto digested in 100ml
-6	↓	↓	13 µg	↓	imp 5 250ml
-7	↓	↓	1.37%	↓	cyclone catch gms total

SAMPLE INFORMATION
FOR LABORATORY OPERATIONS

DATE RECEIVED 4-2-79 LAB NO. 377

SAMPLING DATA

GEOGRAPHICAL ORIGIN RTP-EPA
SAMPLING LOCATION reverb - Asarco, El Paso
SAMPLE TYPE Modified method 5
SAMPLE NUMBERS 205994 run SB-3
SAMPLING METHOD EPA As sampling train
SAMPLED BY Monsanto DATE SAMPLED 6-28-77
CONTAINER TYPE SAMPLE VOLUME
SAMPLE MATRIX

LOG REMARKS

ANALYTICAL DATA

DATE REPORT DUE

SAMPLE NO.	PARAMETERS	ANALYTICAL METHOD	VALUES	DATE OF ANALYSIS	REMARKS
-1	Pb	Atomic Absorption	2300 µg	4-27-79	front filter - TRII digested in 50ml
-2	↓	↓	38 µg	↓	probe rinse 1000ml
-3	↓	↓	210 µg	↓	imp 1,2,3 1000ml
-4	↓	↓	28 µg	↓	imp 4 250ml
-5	↓	↓	52 µg	↓	second filter - Monsanto digested 100ml
-6	↓	↓	373 µg	↓	imp 5 250ml
-7	↓	↓	0.077%	↓	cyclone catch gms total

SAMPLE INFORMATION
FOR LABORATORY OPERATIONS

DATE RECEIVED 4-2-79 LAB NO. 378

SAMPLING DATA

GEOGRAPHICAL ORIGIN RTP-EPA
SAMPLING LOCATION West Inlet - Anaconda, Butte
SAMPLE TYPE Modified method 5
SAMPLE NUMBERS 1-22-5-3-14 / 205983-6 / run 1-A-1
SAMPLING METHOD EPA As sampling train
SAMPLED BY Monsanto DATE SAMPLED 4-20-77
CONTAINER TYPE SAMPLE VOLUME
SAMPLE MATRIX

LOG REMARKS

ANALYTICAL DATA

DATE REPORT DUE

SAMPLE NO.	PARAMETERS	ANALYTICAL METHOD	VALUES	DATE OF ANALYSIS	REMARKS
-1	Pb	Atomic Absorption		4-27-79	
-2			3430 µg		probe rinse 1740 ml
-3			6 µg		imp 1,2,3 1000 ml
-4			10 µg		imp 4 250 ml
-5					
-6			1 µg		imp 5 250 ml

SAMPLE INFORMATION
FOR LABORATORY OPERATIONS

DATE RECEIVED 4-2-79 LAB NO. 379

SAMPLING DATA

GEOGRAPHICAL ORIGIN RTP-EPA
SAMPLING LOCATION West Inlet - Anaconda, Butte
SAMPLE TYPE Modified method 5
SAMPLE NUMBERS 1-77-5-03-15 / 205982-3 run 1-A-2
SAMPLING METHOD EPA As sampling train
SAMPLED BY Monsanto DATE SAMPLED 4-21-77
CONTAINER TYPE SAMPLE VOLUME
SAMPLE MATRIX

LOG REMARKS

ANALYTICAL DATA

DATE REPORT DUE

SAMPLE NO.	PARAMETERS	ANALYTICAL METHOD	VALUES	DATE OF ANALYSIS	REMARKS
-1	Pb	Atomic Absorption		4-27-79	
-2	↓	↓	1740 µg	↓	probe rinse 2000 ml
-3	↓	↓	12 µg	↓	Imp 1,2,3 1000 ml
-4	↓	↓	<1 µg	↓	imp 4 250 ml
-5	↓	↓		↓	
-6	↓	↓	2 µg	↓	imp 5 250 ml

SAMPLE INFORMATION
FOR LABORATORY OPERATIONS

DATE RECEIVED 4-2-79 LAB NO. 380

SAMPLING DATA

GEOGRAPHICAL ORIGIN RTP-EPA
SAMPLING LOCATION West Inlet – Anaconda, Butte
SAMPLE TYPE Modified method 5
SAMPLE NUMBERS 1-77-5-03-16 / 205982-4 / run 1-A-3
SAMPLING METHOD EPA As sampling train
SAMPLED BY Monsanto DATE SAMPLED 4-22-77
CONTAINER TYPE SAMPLE VOLUME
SAMPLE MATRIX

LOG REMARKS

ANALYTICAL DATA

DATE REPORT DUE

SAMPLE NO.	PARAMETERS	ANALYTICAL METHOD	VALUES	DATE OF ANALYSIS	REMARKS
-1	Pb	Atomic Absorption		4-27-79	
-2	↓	↓	460 µg	↓	probe rinse 1520ml
-3	↓	↓	6 µg	↓	imp 1,2,3 1000ml
-4	↓	↓	<1 µg	↓	imp 4 500ml
-5	↓	↓		↓	
-6	↓	↓	<1 µg	↓	imp 6 500ml

SAMPLE INFORMATION
FOR LABORATORY OPERATIONS

DATE RECEIVED 4-2-79 LAB NO. 381

SAMPLING DATA

GEOGRAPHICAL ORIGIN RTP-EPA
SAMPLING LOCATION East Inlet - Anaconda, Butte
SAMPLE TYPE Modified method 5
SAMPLE NUMBERS 1-77-5-3-11 / 205982-2 / run 2-A-1
SAMPLING METHOD EPA As sampling train
SAMPLED BY Monsanto DATE SAMPLED 4-20-77
CONTAINER TYPE SAMPLE VOLUME
SAMPLE MATRIX

LOG REMARKS

ANALYTICAL DATA

DATE REPORT DUE

SAMPLE NO.	PARAMETERS	ANALYTICAL METHOD	VALUES	DATE OF ANALYSIS	REMARKS
-1	Pb	Atomic Absorption		4-27-79	
-2	↓	↓	2370 µg	↓	probe rinse 1100 ml
-3	↓	↓	7 µg	↓	Imp 1,2,3 1000 ml
-4	↓	↓	1 µg	↓	Imp 4 250 ml
-5	↓	↓		↓	
-6	↓	↓	1 µg	↓	Imp 5 250 ml

SAMPLE INFORMATION
FOR LABORATORY OPERATIONS

DATE RECEIVED 4-2-79 LAB NO. 382

SAMPLING DATA

GEOGRAPHICAL ORIGIN RTP-EPA
SAMPLING LOCATION East Inlet - Anaconda, Butte
SAMPLE TYPE Modified method 5
SAMPLE NUMBERS 1-77-5-03-12 / 205983-5 / 2-A-2
SAMPLING METHOD EPA As sampling train
SAMPLED BY Monsanto DATE SAMPLED 4-21-77
CONTAINER TYPE SAMPLE VOLUME
SAMPLE MATRIX

LOG REMARKS

ANALYTICAL DATA

DATE REPORT DUE

SAMPLE NO.	PARAMETERS	ANALYTICAL METHOD	VALUES	DATE OF ANALYSIS	REMARKS
-1	Pb	Atomic Absorption		4-27-79	
-2	↓	↓	740 µg	↓	probe rinse 1520 ml
-3	↓	↓	320 µg	↓	imp 1,2,3 1000 ml
-4	↓	↓	5 µg	↓	imp 4,5 500 ml
-5	↓	↓		↓	

SAMPLE INFORMATION
FOR LABORATORY OPERATIONS

DATE RECEIVED 4-2-79 LAB NO. 383

SAMPLING DATA

GEOGRAPHICAL ORIGIN RTP - EPA
SAMPLING LOCATION East Inlet - Anaconda, Butte
SAMPLE TYPE Modified method 5
SAMPLE NUMBERS 1-77-5-3-13 / 205982-1 / 2-A-3
SAMPLING METHOD EPA As Sampling train
SAMPLED BY Monsanto DATE SAMPLED 4/22/77
CONTAINER TYPE SAMPLE VOLUME
SAMPLE MATRIX

LOG REMARKS

ANALYTICAL DATA

DATE REPORT DUE

SAMPLE NO.	PARAMETERS	ANALYTICAL METHOD	VALUES	DATE OF ANALYSIS	REMARKS
-1	Pb	Atomic Absorption		4-27-79	
-2	↓	↓	560 µg	↓	probe rinse 1500ml
-3			6 µg		imp 1,2,3 1000ml
-4			1 µg		imp 4 500ml
-5					
-6	↓	↓	2 µg	↓	imp 5 1000ml

SAMPLE INFORMATION
FOR LABORATORY OPERATIONS

DATE RECEIVED 4-2-79 LAB NO. 384

SAMPLING DATA

GEOGRAPHICAL ORIGIN RTP - EPA
SAMPLING LOCATION Outlet (B) - Anaconda, Butte
SAMPLE TYPE Modified method 5
SAMPLE NUMBERS 1-77-5-05-02 / 205483-7 / run B-1
SAMPLING METHOD EPA As sampling train
SAMPLED BY Monsanto DATE SAMPLED 4-20-77
CONTAINER TYPE SAMPLE VOLUME
SAMPLE MATRIX

LOG REMARKS

ANALYTICAL DATA

DATE REPORT DUE

SAMPLE NO.	PARAMETERS	ANALYTICAL METHOD	VALUES	DATE OF ANALYSIS	REMARKS
-1	Pb	Atomic Absorption		4-27-79	
-2	↓	↓	10 µg	↓	probe rinse 600ml
-3	↓	↓	6 µg	↓	imp 1,2,3 1000ml
-4	↓	↓	1 µg	↓	imp 4 500ml
-5	↓	↓		↓	
-6	↓	↓	2 µg	↓	imp 6 500ml

SAMPLE INFORMATION
FOR LABORATORY OPERATIONS

DATE RECEIVED 4-2-79 LAB NO. 385

SAMPLING DATA

GEOGRAPHICAL ORIGIN RTP-EPA
SAMPLING LOCATION Outlet (B) - Anaconda, Ba
SAMPLE TYPE Modified Method 5
SAMPLE NUMBERS 1-77-5-05-03 / 205984-8 / run B-2
SAMPLING METHOD EPA As sampling train
SAMPLED BY Monsanto DATE SAMPLED 4-21-77
CONTAINER TYPE SAMPLE VOLUME
SAMPLE MATRIX

LOG REMARKS

ANALYTICAL DATA

DATE REPORT DUE

SAMPLE NO.	PARAMETERS	ANALYTICAL METHOD	VALUES	DATE OF ANALYSIS	REMARKS
-1	Pb	Atomic Absorption		4-27-79	
-2	↓	↓	40 µg	↓	probe rinse 850 ml
-3	↓	↓	7 µg	↓	imp 1,2,3 1100 ml
-4	↓	↓	2 µg	↓	imp 4 500 ml
-5	↓	↓		↓	
-6	↓	↓	1 µg	↓	imp 5 250

SAMPLE INFORMATION
FOR LABORATORY OPERATIONS

DATE RECEIVED 4-2-79 LAB NO. 386

SAMPLING DATA

GEOGRAPHICAL ORIGIN EPA - RTP
SAMPLING LOCATION outlet (B) - Anaconda, Butte
SAMPLE TYPE Modified method 5
SAMPLE NUMBERS 1-77-5-05-04
SAMPLING METHOD EPA 5 sampling train
SAMPLED BY Monsanto DATE SAMPLED 4-22-77
CONTAINER TYPE SAMPLE VOLUME
SAMPLE MATRIX

LOG REMARKS

ANALYTICAL DATA

DATE REPORT DUE

SAMPLE NO.	PARAMETERS	ANALYTICAL METHOD	VALUES	DATE OF ANALYSIS	REMARKS
-1	Pb	Atomic Absorption		4-27-79	
-2	↓	↓			probe rinse 700ml
-3			6 µg		imp 1,2 3 1000ml
-4			1 µg		imp 4 250ml
-5					
-6	↓	↓	1 µg		imp 5 250ml

SAMPLE INFORMATION
FOR LABORATORY OPERATIONS

DATE RECEIVED 4-2-79 LAB NO. 387

SAMPLING DATA

GEOGRAPHICAL ORIGIN RTP-EPA
SAMPLING LOCATION Anaconda, Butte Montana
SAMPLE TYPE process
SAMPLE NUMBERS
SAMPLING METHOD grab
SAMPLED BY Monsanto DATE SAMPLED
CONTAINER TYPE SAMPLE VOLUME
SAMPLE MATRIX 80 mesh process particulate

LOG REMARKS

ANALYTICAL DATA

DATE REPORT DUE

SAMPLE NO.	PARAMETERS	ANALYTICAL METHOD	VALUES	DATE OF ANALYSIS	REMARKS
-1	Pb	atomic absorption	0.662%	4-27-79	baghouse dust 4-21-77
-2	↓	↓	2.14%	↓	baghouse dust 4-22-77
-3	↓	↓	2.86%	↓	baghouse dust 4-23-77
-4	↓	↓	1.14%	↓	baghouse dust 4-25-77
-5	↓	↓	0.768%	↓	baghouse dust 4-26-77
-6	↓	↓	1.12%	↓	elec. furn. 4-20-77
-7	↓	↓	0.678%	↓	elect. furn 4-21-77
-8	↓	↓	0.718%	↓	elect. furn. 4-22-77
-9	↓	↓	3.47%	↓	converter slag 4-20-77

SAMPLE INFORMATION
FOR LABORATORY OPERATIONS

DATE RECEIVED 4-2-79 LAB NO. 388

SAMPLING DATA

GEOGRAPHICAL ORIGIN RTP-EPA
SAMPLING LOCATION Asarco, El Paso Texas
SAMPLE TYPE process
SAMPLE NUMBERS
SAMPLING METHOD grab
SAMPLED BY Monsanto DATE SAMPLED
CONTAINER TYPE SAMPLE VOLUME
SAMPLE MATRIX 80 mesh process particulate

LOG REMARKS

ANALYTICAL DATA

DATE REPORT DUE

SAMPLE NO.	PARAMETERS	ANALYTICAL METHOD	VALUES	DATE OF ANALYSIS	REMARKS
-1	Pb	Atomic Absorption	0.554%	4-27-79	conv. cott. 6-28-77
-2			0.936%		R+R spray 6-28-77
-3			0.555%		Zinc Slag 6-22-77
-4			0.216%		Matte 24 hr. 6-21-77
-5			0.342%		Matte 24 hr 6-22-77
-6			0.388%		Matte 24 hr. 6-23-77
-7			0.879%		Matte 24 hr. 6-24-77
-8			0.242%		Matte 24 hr. 6-26-77
-9			0.886%		Matte 24 hr. 6-27-77
-10			0.706%		Matte 24 hr. 6-28-77

SAMPLE INFORMATION
FOR LABORATORY OPERATIONS

DATE RECEIVED 4-2-79 LAB NO. 389

SAMPLING DATA

GEOGRAPHICAL ORIGIN RTP-EPA
SAMPLING LOCATION Asarco, El Paso, Texas
SAMPLE TYPE process
SAMPLE NUMBERS
SAMPLING METHOD grab
SAMPLED BY Monsanto DATE SAMPLED
CONTAINER TYPE SAMPLE VOLUME
SAMPLE MATRIX 80 mesh process particulate

LOG REMARKS

ANALYTICAL DATA

DATE REPORT DUE

SAMPLE NO.	PARAMETERS	ANALYTICAL METHOD	VALUES	DATE OF ANALYSIS	REMARKS
-1	Pb	Atomic Absorption	0.220%	4-27-79	Roaster charge 6-21-77
-2			0.473%		Roaster charge 6-24-77
-3			0.427%		Roaster Charge 6-26-77
-4			0.215%		Roaster charge 6-27-77
-5			0.373%		conv. slag 6-21-77
-6			1.21%		conv. slag 6-22-77
-7			0.621%		conv. slag 6-23-77
-8			0.576%		conv. slag 6-24-77
-9			0.413%		conv. slag 6-28-77

SAMPLE INFORMATION
FOR LABORATORY OPERATIONS

DATE RECEIVED 2-7-78 LAB NO. 390

SAMPLING DATA

GEOGRAPHICAL ORIGIN Asarco, El Paso Texas
SAMPLING LOCATION baghouse Inlet
SAMPLE TYPE modified method 5
SAMPLE NUMBERS AMI-1
SAMPLING METHOD EPA As sampling train
SAMPLED BY TRW · D. Powell DATE SAMPLED 1-19-78
CONTAINER TYPE SAMPLE VOLUME
SAMPLE MATRIX

LOG REMARKS

ANALYTICAL DATA

DATE REPORT DUE

SAMPLE NO.	PARAMETERS	ANALYTICAL METHOD	VALUES	DATE OF ANALYSIS	REMARKS
-1	Pb	Atomic Absorption	18,300 µg	4-27-79	filter 50ml
-2	↓	↓	2500 µg	↓	probe rinse 320ml
-3			4 µg		imp 1,2 346ml
-4			1 µg		imp 3 76ml
-5			1 µg		imp 4,5,6 690ml

SAMPLE INFORMATION
FOR LABORATORY OPERATIONS

DATE RECEIVED 2-7-78 LAB NO. 391

SAMPLING DATA

GEOGRAPHICAL ORIGIN Asarco - El Paso, Texas
SAMPLING LOCATION baghouse inlet
SAMPLE TYPE modified method 5
SAMPLE NUMBERS AMI-2
SAMPLING METHOD EPA As Sampling train
SAMPLED BY TRW - D. Powell DATE SAMPLED 1-19-78
CONTAINER TYPE SAMPLE VOLUME
SAMPLE MATRIX

LOG REMARKS

ANALYTICAL DATA

DATE REPORT DUE

SAMPLE NO.	PARAMETERS	ANALYTICAL METHOD	VALUES	DATE OF ANALYSIS	REMARKS
-1	Pb	Atomic Absorption	530 µg	4-27-79	filter 50ml
-2	↓	↓	6270 µg	↓	Probe rinse 320ml
-3	↓	↓	4 µg	↓	imp 1,2 346ml
-4	↓	↓	<1 µg	↓	imp 3 76ml
-5	↓	↓	2 µg	↓	imp 4,5,6 690ml

SAMPLE INFORMATION
FOR LABORATORY OPERATIONS

DATE RECEIVED 2-7-78 LAB NO. 392

SAMPLING DATA

GEOGRAPHICAL ORIGIN Asarco - El Paso Texas
SAMPLING LOCATION Baghouse inlet
SAMPLE TYPE modified method 5
SAMPLE NUMBERS AMI-3
SAMPLING METHOD EPA As sampling train
SAMPLED BY TRW - Del Powell DATE SAMPLED 1-23-78
CONTAINER TYPE SAMPLE VOLUME
SAMPLE MATRIX

LOG REMARKS

ANALYTICAL DATA

DATE REPORT DUE

SAMPLE NO.	PARAMETERS	ANALYTICAL METHOD	VALUES	DATE OF ANALYSIS	REMARKS
-1	Pb	Atomic Absorption	9100 µg	4-27-79	filter 50ml
-2	↓	↓	980 µg	↓	Probe rinse 63ml
-3	↓	↓	12 µg	↓	Imp 1,2 390
-4	↓	↓	<1 µg	↓	Imp 3 82ml
-5	↓	↓	4 µg	↓	Imp 4,5,6 520ml

SAMPLE INFORMATION
FOR LABORATORY OPERATIONS

DATE RECEIVED 2-7-78 LAB NO. 393

SAMPLING DATA

GEOGRAPHICAL ORIGIN Asarco — El Paso, Texas
SAMPLING LOCATION baghouse outlet
SAMPLE TYPE modified method 5
SAMPLE NUMBERS AME-1
SAMPLING METHOD EPA As sampling train
SAMPLED BY TRW - Del Powell DATE SAMPLED 1-19-78
CONTAINER TYPE SAMPLE VOLUME
SAMPLE MATRIX

LOG REMARKS

ANALYTICAL DATA

DATE REPORT DUE

SAMPLE NO.	PARAMETERS	ANALYTICAL METHOD	VALUES	DATE OF ANALYSIS	REMARKS
-1	Pb	Atomic Absorption		4-27-79	no filter available
-2	↓		760 µg	↓	probe rinse 395 ml
-3					imp 1,2 not available
-4					imp 3 not available
-5	↓	✓	3 µg	↓	imp 4,5,6 307 ml

SAMPLE INFORMATION
FOR LABORATORY OPERATIONS

DATE RECEIVED 2-7-78 LAB NO. 394

SAMPLING DATA

GEOGRAPHICAL ORIGIN Asarco - El Paso, Texas
SAMPLING LOCATION baghouse outlet
SAMPLE TYPE modified method 5
SAMPLE NUMBERS AME-2
SAMPLING METHOD EPA As sampling train
SAMPLED BY TRW - Del Powell DATE SAMPLED 1-19-78
CONTAINER TYPE SAMPLE VOLUME
SAMPLE MATRIX

LOG REMARKS

ANALYTICAL DATA

DATE REPORT DUE

SAMPLE NO.	PARAMETERS	ANALYTICAL METHOD	VALUES	DATE OF ANALYSIS	REMARKS
-1	Pb	Atomic Absorption		4-27-79	filter not available
-2	↓	↓	38 µg	↓	Probe rinse 358ml
-3	↓	↓		↓	imp 1,2 not available
-4	↓	↓	<1 µg	↓	imp 3 70ml
-5	↓	↓	2 µg	↓	imp 4,5,6 550ml

SAMPLE INFORMATION
FOR LABORATORY OPERATIONS

DATE RECEIVED 2-7-78 LAB NO. 395

SAMPLING DATA

GEOGRAPHICAL ORIGIN Asarco - El Paso, Texas
SAMPLING LOCATION baghouse outlet
SAMPLE TYPE modified method 5
SAMPLE NUMBERS AME-3
SAMPLING METHOD EPA As sampling train
SAMPLED BY TRW - Del Powell DATE SAMPLED 1-23-78
CONTAINER TYPE SAMPLE VOLUME
SAMPLE MATRIX

LOG REMARKS

ANALYTICAL DATA

DATE REPORT DUE

SAMPLE NO.	PARAMETERS	ANALYTICAL METHOD	VALUES	DATE OF ANALYSIS	REMARKS
-1					filter not availaoc
-2			17 µg	4-27-79	Probe rinse 130ml
-3					imp 1, 2 not available
-4					imp 3 not availabe
-5					imp 4, 5, 6 not available

SAMPLE INFORMATION
FOR LABORATORY OPERATIONS

DATE RECEIVED 2-7-78 LAB NO. 397

SAMPLING DATA

GEOGRAPHICAL ORIGIN Asarco - El Paso
SAMPLING LOCATION Matte tapping
SAMPLE TYPE modified method 5
SAMPLE NUMBERS CME-2
SAMPLING METHOD EPA As sampling train
SAMPLED BY Tom - Del Powell DATE SAMPLED 1-21-78
CONTAINER TYPE SAMPLE VOLUME
SAMPLE MATRIX

LOG REMARKS

ANALYTICAL DATA

DATE REPORT DUE

SAMPLE NO.	PARAMETERS	ANALYTICAL METHOD	VALUES	DATE OF ANALYSIS	REMARKS
-1	Pb	Atomic Absorption	47,500 µg	4-27-79	filter 50ml
-2	↓	↓	1440 µg	↓	Probe rinse 164ml
-3	↓	↓	5 µg	↓	imp 1,2 465ml
-4	↓	↓		↓	imp 3 (not available) 92ml
-5	↓	↓	8 µg	↓	imp 4,5,6 700ml

SAMPLE INFORMATION
FOR LABORATORY OPERATIONS

DATE RECEIVED 2-7-78 LAB NO. 398

SAMPLING DATA

GEOGRAPHICAL ORIGIN Asarco - El Paso, Texas
SAMPLING LOCATION Hatte tapping
SAMPLE TYPE modified method 5
SAMPLE NUMBERS CME-3
SAMPLING METHOD EPA As Sampling train
SAMPLED BY Bill - Del Powell DATE SAMPLED 1-25-78
CONTAINER TYPE SAMPLE VOLUME
SAMPLE MATRIX

LOG REMARKS

ANALYTICAL DATA

DATE REPORT DUE

SAMPLE NO.	PARAMETERS	ANALYTICAL METHOD	VALUES	DATE OF ANALYSIS	REMARKS
-1	Pb	Atomic Absorption	32,300 µg	4-27-79	filter 50 ml
-2	↓	↓	1050 µg	↓	Probe rinse 136 ml
-3	↓	↓	31 µg	↓	imp 1,2 475 ml
-4	↓	↓	<1 µg	↓	imp 3 82 ml
-5	↓	↓	6 µg	↓	imp 4,5,6 700 ml

SAMPLE INFORMATION
FOR LABORATORY OPERATIONS

DATE RECEIVED 2-7-78 LAB NO. 399

SAMPLING DATA

GEOGRAPHICAL ORIGIN Asarco - El Paso, Texas
SAMPLING LOCATION calcine fugitive duct
SAMPLE TYPE modified method 5
SAMPLE NUMBERS DME-1
SAMPLING METHOD EPA As sampling train
SAMPLED BY TRW - Del Powell DATE SAMPLED 1-24-78
CONTAINER TYPE SAMPLE VOLUME
SAMPLE MATRIX

LOG REMARKS

ANALYTICAL DATA

DATE REPORT DUE

SAMPLE NO.	PARAMETERS	ANALYTICAL METHOD	VALUES	DATE OF ANALYSIS	REMARKS
-1	Pb	Atomic Absorption	29,600 µg	4-27-79	filter 50ml
-2	↓	↓	122 µg	↓	Probe rinse 260ml
-3	↓	↓	14 µg	↓	imp 1,2. 520 ml
-4	↓	↓	<1 µg	↓	imp 3 114 ml
-5	↓	↓	9 µg	↓	imp 4,5,. 620 ml

SAMPLE INFORMATION
FOR LABORATORY OPERATIONS

DATE RECEIVED 2-7-78 LAB NO. 400

SAMPLING DATA

GEOGRAPHICAL ORIGIN Asarco - El Paso, Texas
SAMPLING LOCATION calcine fugitive duct
SAMPLE TYPE modified method 5
SAMPLE NUMBERS DME-2
SAMPLING METHOD EPA As sampling train
SAMPLED BY TRW - Del Powell DATE SAMPLED 1-24-78
CONTAINER TYPE SAMPLE VOLUME
SAMPLE MATRIX

LOG REMARKS

ANALYTICAL DATA

DATE REPORT DUE

SAMPLE NO.	PARAMETERS	ANALYTICAL METHOD	VALUES	DATE OF ANALYSIS	REMARKS
-1	Pb	Atomic Absorption	900 µg	4-27-79	filter 50ml
-2	↓	↓	66 µg	↓	Probe rinse 220ml
-3	↓	↓	17 µg	↓	imp 1,2 510ml
-4	↓	↓	<1 µg	↓	imp 3 77ml
-5	↓	↓	24 µg	↓	imp 4,5,6 640ml

SAMPLE INFORMATION
FOR LABORATORY OPERATIONS

DATE RECEIVED 2-7-78 LAB NO. 402

SAMPLING DATA

GEOGRAPHICAL ORIGIN Asarco - El Paso, Texas
SAMPLING LOCATION Reverb Slag, Elec. Furn. Matte, Elec. Furn. Slag Ladle
SAMPLE TYPE process
SAMPLE NUMBERS N/A
SAMPLING METHOD grab
SAMPLED BY Asarco personnel DATE SAMPLED
CONTAINER TYPE SAMPLE VOLUME
SAMPLE MATRIX

LOG REMARKS Samples dated 4-77 are from Anaconda in Butte Montana

ANALYTICAL DATA

DATE REPORT DUE

SAMPLE NO.	PARAMETERS	ANALYTICAL METHOD	VALUES	DATE OF ANALYSIS	REMARKS
-1	Pb	Atomic Absorption	0.160%	4-27-79	reverb slag 6-26-77
-2	↓	↓	0.210%	↓	reverb slag 6-27-77
-3	↓	↓	0.133%	↓	reverb slag 6-28-77
-4	↓	↓	0.308%	↓	Elec. Furn. Matte 4-20-77
-5	↓	↓	0.590%	↓	Elec. Furn. Matte 4-21-77
-6	↓	↓	0.644%	↓	Elec. Furn. Matte 4-22-77
-7	↓	↓	0.759%	↓	Elec. Furn. Slag Ladle 4-20-77
-8	↓	↓	0.512%	↓	Elec. Furn Slag Ladle 4-21-77
-9	↓	↓	0.418%	↓	Elec. Furn Slag Ladle 4-22-77

SAMPLE INFORMATION
FOR LABORATORY OPERATIONS

DATE RECEIVED 2-7-78 LAB NO. 403

SAMPLING DATA

GEOGRAPHICAL ORIGIN Asarco - El Paso, Texas
SAMPLING LOCATION Reactor Feed, Wedge Roaster Calcine, Calcine
SAMPLE TYPE process
SAMPLE NUMBERS N/A
SAMPLING METHOD grab
SAMPLED BY Asarco personnel DATE SAMPLED
CONTAINER TYPE SAMPLE VOLUME
SAMPLE MATRIX

LOG REMARKS samples dated 4-77 are from Anaconda in Butte Montana

ANALYTICAL DATA

DATE REPORT DUE

SAMPLE NO.	PARAMETERS	ANALYTICAL METHOD	VALUES	DATE OF ANALYSIS	REMARKS
-1	Pb	Atomic Absorption	0.434%	4-27-79	Reactor Feed 4-20-77
-2	↓	↓	0.290%	↓	Reactor Feed 4-21-77
-3	↓	↓	0.461%	↓	Reactor Feed 4-22-77
-4	↓	↓	0.283%	↓	Wedge Roaster Calcine 6-26-77
-5	↓	↓	0.321%	↓	Wedge Roaster Calcine 6-27-77
-6	↓	↓	0.345%	↓	Wedge Roaster Calcine 6-28-77
-7	↓	↓	0.796%	↓	calcine 4-20-77
-8	↓	↓	0.769%	↓	calcine 4-20-77
-9	↓	↓	0.569%	↓	calcine 4-20-77

SAMPLE INFORMATION
FOR LABORATORY OPERATIONS

DATE RECEIVED 2-7-78 LAB NO. 404

SAMPLING DATA

GEOGRAPHICAL ORIGIN Asarco – El Paso, Texas
SAMPLING LOCATION Wedge Roaster Calcine
SAMPLE TYPE process
SAMPLE NUMBERS N/A
SAMPLING METHOD grab
SAMPLED BY Asarco personnel DATE SAMPLED
CONTAINER TYPE SAMPLE VOLUME
SAMPLE MATRIX

LOG REMARKS

ANALYTICAL DATA

DATE REPORT DUE

SAMPLE NO.	PARAMETERS	ANALYTICAL METHOD	VALUES	DATE OF ANALYSIS	REMARKS
-1	Pb	Atomic Absorption	0.110%	4-27-79	1-17-78
-2	↓	↓	0.264%	↓	1-18-78
-3			0.213%		1-19-78
-4			0.150%		1-20-78
-5			0.178%		1-21-78
-6			0.294%		1-22-78
-7			0.37[illegible]%		1-23-78
-8			0.200%		1-24-78
-9	↓	↓	0.296%	↓	1-25-78

SAMPLE INFORMATION
FOR LABORATORY OPERATIONS

DATE RECEIVED 2-7-78 LAB NO. 405

SAMPLING DATA

GEOGRAPHICAL ORIGIN Asarco - El Paso, Texas
SAMPLING LOCATION Raw Reverb Slag
SAMPLE TYPE process
SAMPLE NUMBERS N/A
SAMPLING METHOD grab
SAMPLED BY Asarco Personnel DATE SAMPLED
CONTAINER TYPE SAMPLE VOLUME
SAMPLE MATRIX

LOG REMARKS

ANALYTICAL DATA

DATE REPORT DUE

SAMPLE NO.	PARAMETERS	ANALYTICAL METHOD	VALUES	DATE OF ANALYSIS	REMARKS
-1	Pb	Atomic Absorption	0.180%	4-27-79	1-17-78
-2	↓	↓	0.330%	↓	1-18-78
-3	↓	↓	0.277%	↓	1-19-78
-4	↓	↓	0.164%	↓	1-22-78
-5	↓	↓	0.210%	↓	1-23-78
-6	↓	↓	0.119%	↓	1-24-78
-7	↓	↓	0.397%	↓	1-25-78

SAMPLE INFORMATION
FOR LABORATORY OPERATIONS

DATE RECEIVED 2-7-78 LAB NO. 406

SAMPLING DATA

GEOGRAPHICAL ORIGIN Asarco - El Paso, Texas
SAMPLING LOCATION H.F. Reverb slag
SAMPLE TYPE process
SAMPLE NUMBERS N/A
SAMPLING METHOD grab
SAMPLED BY Asarco personnel DATE SAMPLED
CONTAINER TYPE SAMPLE VOLUME
SAMPLE MATRIX

LOG REMARKS

ANALYTICAL DATA

DATE REPORT DUE

SAMPLE NO.	PARAMETERS	ANALYTICAL METHOD	VALUES	DATE OF ANALYSIS	REMARKS
-1	Pb	Atomic Absorption	0.136%	4-27-79	1-17-78
-2			0.146%		1-18-78
-3			0.147%		1-19-78
-4			0.177%		1-20-78
-5			0.224%		1-21-78
-6			0.153%		1-22-78
-7			0.274%		1-23-78
-8			0.141%		1-24-78
-9			0.365%		1-25-78
-10			0.222%		1-28-78

SAMPLE INFORMATION
FOR LABORATORY OPERATIONS

DATE RECEIVED 2-7-78 LAB NO. 407

SAMPLING DATA

GEOGRAPHICAL ORIGIN Asarco — El Paso, Texas
SAMPLING LOCATION Reverb Matte
SAMPLE TYPE process
SAMPLE NUMBERS N/A
SAMPLING METHOD grab
SAMPLED BY Asarco Personnel DATE SAMPLED
CONTAINER TYPE SAMPLE VOLUME
SAMPLE MATRIX

LOG REMARKS

ANALYTICAL DATA

DATE REPORT DUE

SAMPLE NO.	PARAMETERS	ANALYTICAL METHOD	VALUES	DATE OF ANALYSIS	REMARKS
-1	Pb	Atomic Absorption	0.762%	4-27-79	1-17-78
-2	↓	↓	0.317%	↓	1-18-78
-3	↓	↓	0.599%	↓	1-19-78
-4	↓	↓	0.554%	↓	1-20-78
-5	↓	↓	0.315%	↓	1-21-78
-6	↓	↓	0.529%	↓	1-22-78
-7	↓	↓	0.406%	↓	1-23-78
-8	↓	↓	0.381%	↓	1-24-78

SAMPLE INFORMATION
FOR LABORATORY OPERATIONS

DATE RECEIVED 2-7-78 LAB NO. 408

SAMPLING DATA

GEOGRAPHICAL ORIGIN Asarco - El Paso, Texas
SAMPLING LOCATION Converter Slag
SAMPLE TYPE process
SAMPLE NUMBERS N/A
SAMPLING METHOD grab
SAMPLED BY Asarco personnel DATE SAMPLED
CONTAINER TYPE SAMPLE VOLUME
SAMPLE MATRIX

LOG REMARKS

ANALYTICAL DATA

DATE REPORT DUE

SAMPLE NO.	PARAMETERS	ANALYTICAL METHOD	VALUES	DATE OF ANALYSIS	REMARKS
-1	Pb	Atomic Absorption	1.02%	4-27-79	1-17-78
-2	↓	↓	0.813%	↓	1-18-78
-3			1.22%		1-19-78
-4			3.07%		1-20-78
-5			0.821%		1-21-78
-6			0.870%		1-22-78
-7			1.99%		1-23-78
-8			2.37%		1-24-78
-9	↓	↓	1.21%	↓	1-25-78

SAMPLE INFORMATION
FOR LABORATORY OPERATIONS

DATE RECEIVED 2-[illegible]-78 LAB NO. 409

SAMPLING DATA

GEOGRAPHICAL OR[illegible] Asarco - El Paso, Texas
SAMPLING LOCAT[illegible] Wedge Roaster concen. feed
SAMPLE TYPE process
SAMPLE NUMBERS N/A
SAMPLING METHOD grab
SAMPLED BY Asarco personnel DATE SAMPLED
CONTAINER TYPE SAMPLE VOLUME
SAMPLE MATRIX

LOG REMARKS

ANALYTICAL DATA

DATE REPORT DUE

SAMPLE NO.	PARAMETERS	ANALYTICAL METHOD	VALUES	DATE OF ANALYSIS	REMARKS
-1	Pb	Atomic Absorption	0.253%	4-27-79	1-18-78
-2			0.269%		1-19-78
-3			0.164%		1-20-78
-4			0.132%		1-21-78
-5			0.289%		1-22-78
-6			0.223%		1-23-78
-7			0.306%		1-24-78
-8			0.490%		1-25-78
-9			0.542%		1-26-78

SAMPLE INFORMATION
FOR LABORATORY OPERATIONS

DATE RECEIVED 2-7-78 LAB NO. 410

SAMPLING DATA

GEOGRAPHICAL ORIGIN Asarco - El Paso, Texas
SAMPLING LOCATION Roaster and Reverb spray chamber
SAMPLE TYPE process
SAMPLE NUMBERS N/A
SAMPLING METHOD grab
SAMPLED BY Asarco personnel DATE SAMPLED
CONTAINER TYPE SAMPLE VOLUME
SAMPLE MATRIX

LOG REMARKS

ANALYTICAL DATA

DATE REPORT DUE

SAMPLE NO.	PARAMETERS	ANALYTICAL METHOD	VALUES	DATE OF ANALYSIS	REMARKS
	Pb	atomic absorption	0.558%	4-27-79	1-23-78

SAMPLE INFORMATION
FOR LABORATORY OPERATIONS

DATE RECEIVED 5-14-79 LAB NO. 412

SAMPLING DATA

GEOGRAPHICAL ORIGIN Asarco — Tacoma, Washington
SAMPLING LOCATION conv. full cycle
SAMPLE TYPE
SAMPLE NUMBERS AA-CRO-1
SAMPLING METHOD
SAMPLED BY D. Powell DATE SAMPLED 5-9-79
CONTAINER TYPE SAMPLE VOLUME
SAMPLE MATRIX

LOG REMARKS

ANALYTICAL DATA

DATE REPORT DUE

SAMPLE NO.	PARAMETERS	ANALYTICAL METHOD	VALUES µg Pb	DATE OF ANALYSIS	REMARKS
-1	Pb	Atomic Absorption	580	5-24-79	filter
-2	↓	↓	210	5-24-79	probe rinse (acetone) 210 ml
-3	↓	↓	16,700	5-24-79	probe rinse (NaOH) 255 ml
-4	↓	↓	980	5-24-79	imp. 1,2 - oily residue present 575 ml

SAMPLE INFORMATION
FOR LABORATORY OPERATIONS

DATE RECEIVED 5-14-79 LAB NO. 413

SAMPLING DATA

GEOGRAPHICAL ORIGIN Asarco- Tacoma
SAMPLING LOCATION conv. full cycle
SAMPLE TYPE
SAMPLE NUMBERS AA-CRO-2
SAMPLING METHOD
SAMPLED BY D. Powell DATE SAMPLED 5-10-79
CONTAINER TYPE SAMPLE VOLUME
SAMPLE MATRIX

LOG REMARKS

ANALYTICAL DATA

DATE REPORT DUE

SAMPLE NO.	PARAMETERS	ANALYTICAL METHOD	VALUES	DATE OF ANALYSIS	REMARKS
-1	Pb	Atomic Absorption	490	5-24-79	filter
-2	↓	↓	23,300	5-24-79	Probe rinse 575 ml
-3	↓	↓	120	5-25-79	imp 1,2 890 ml

SAMPLE INFORMATION
FOR LABORATORY OPERATIONS

DATE RECEIVED 5-14-79 LAB NO. 414

SAMPLING DATA

GEOGRAPHICAL ORIGIN Asarco - Tacoma
SAMPLING LOCATION conv. cooper blow
SAMPLE TYPE
SAMPLE NUMBERS AA-CR-1
SAMPLING METHOD
SAMPLED BY D. Powell DATE SAMPLED 5-9-79
CONTAINER TYPE SAMPLE VOLUME
SAMPLE MATRIX

LOG REMARKS

ANALYTICAL DATA

DATE REPORT DUE

SAMPLE NO.	PARAMETERS	ANALYTICAL METHOD	VALUES µg Pb	DATE OF ANALYSIS	REMARKS
-1	Pb	Atomic Absorption	1060	5-24-79	filter
-2	↓	↓	48,800	5-24-79	Probe rinse 1,430 ml
-3	↓	↓	930	5-24-79	imp 1,2 491 ml

SAMPLE INFORMATION
FOR LABORATORY OPERATIONS

DATE RECEIVED 5-14-79 LAB NO. 415

SAMPLING DATA

GEOGRAPHICAL ORIGIN Asarco - Tacoma
SAMPLING LOCATION conv. cooper blow
SAMPLE TYPE
SAMPLE NUMBERS AA-CR-2
SAMPLING METHOD
SAMPLED BY D. Powell DATE SAMPLED 5-10-79
CONTAINER TYPE SAMPLE VOLUME
SAMPLE MATRIX

LOG REMARKS

ANALYTICAL DATA

DATE REPORT DUE

SAMPLE NO.	PARAMETERS	ANALYTICAL METHOD	VALUES µg/g	DATE OF ANALYSIS	REMARKS
-1	Pb	Atomic Absorption	40	5-24-79	filter
-2	↓	↓	21,500	5-24-79	probe rinse 725 ml
-3	↓	↓	30	5-24-79	imp 1,2 468 ml

SAMPLE INFORMATION
FOR LABORATORY OPERATIONS

DATE RECEIVED 5-14-79 LAB NO. 416

SAMPLING DATA

GEOGRAPHICAL ORIGIN Asarco - Tacoma
SAMPLING LOCATION conv. fugitive
SAMPLE TYPE
SAMPLE NUMBERS AA- CF1-1
SAMPLING METHOD
SAMPLED BY D. Powell DATE SAMPLED 5-8-79
CONTAINER TYPE SAMPLE VOLUME
SAMPLE MATRIX

LOG REMARKS

ANALYTICAL DATA

DATE REPORT DUE

SAMPLE NO.	PARAMETERS	ANALYTICAL METHOD	VALUES µg Pb	DATE OF ANALYSIS	REMARKS
-1	Pb	Atomic Absorption	4,400	5-24-79	filter
-2	↓	↓	3,300	5-24-79	Probe rinse 417 ml
-3	↓	↓	420	5-24-79	imp 1,2 347 ml

SAMPLE INFORMATION
FOR LABORATORY OPERATIONS

DATE RECEIVED 5-14-79 LAB NO. 417

SAMPLING DATA

GEOGRAPHICAL ORIGIN Asarco - Tacoma
SAMPLING LOCATION conv. fugitive
SAMPLE TYPE
SAMPLE NUMBERS AA-CF1-2
SAMPLING METHOD
SAMPLED BY D. Powell DATE SAMPLED 5-10-79
CONTAINER TYPE SAMPLE VOLUME
SAMPLE MATRIX

LOG REMARKS

ANALYTICAL DATA

DATE REPORT DUE

SAMPLE NO.	PARAMETERS	ANALYTICAL METHOD	VALUES	DATE OF ANALYSIS	REMARKS
-1	Pb	Atomic Absorption	2000	5-24-79	filter
-2	↓	↓	9400	5-24-79	Probe rinse 363 ml
-3	↓	↓	20	5-25-79	imp 1,2 277 ml

SAMPLE INFORMATION
FOR LABORATORY OPERATIONS

DATE RECEIVED 5-14-79 LAB NO. 418

SAMPLING DATA

GEOGRAPHICAL ORIGIN Asarco- Tacoma
SAMPLING LOCATION conv. fugitive
SAMPLE TYPE
SAMPLE NUMBERS AA-CF2-1
SAMPLING METHOD
SAMPLED BY D. Powell DATE SAMPLED 5-8-79
CONTAINER TYPE SAMPLE VOLUME
SAMPLE MATRIX

LOG REMARKS

ANALYTICAL DATA

DATE REPORT DUE

SAMPLE NO.	PARAMETERS	ANALYTICAL METHOD	VALUES µg Pb	DATE OF ANALYSIS	REMARKS
-1	Pb	Atomic Absorption	1000	5-24-79	filter
-2	↓	↓	1900	5-24-79	Probe rinse 300 ml
-3	↓	↓	620	5-24-79	imp 1,2 345 ml

SAMPLE INFORMATION
FOR LABORATORY OPERATIONS

DATE RECEIVED 5-14-79 LAB NO. 419

SAMPLING DATA

GEOGRAPHICAL ORIGIN Asarco - Tacoma
SAMPLING LOCATION conv. fugitive
SAMPLE TYPE
SAMPLE NUMBERS AA-CF2-2
SAMPLING METHOD
SAMPLED BY D. Powell DATE SAMPLED 5-10-79
CONTAINER TYPE SAMPLE VOLUME
SAMPLE MATRIX

LOG REMARKS

ANALYTICAL DATA

DATE REPORT DUE

SAMPLE NO.	PARAMETERS	ANALYTICAL METHOD	VALUES	DATE OF ANALYSIS	REMARKS
-1	Pb	Atomic Absorption	1200	5-24-79	filter
-2	↓	↓	3700	5-24-79	Probe rinse 248 ml
-3	↓	↓	10	5-24-79	imp 1,2 153 ml

SAMPLE INFORMATION
FOR LABORATORY OPERATIONS

DATE RECEIVED 5-14-79 LAB NO. 420

SAMPLING DATA

GEOGRAPHICAL ORIGIN Asarco - Tacoma
SAMPLING LOCATION conv. fugitive
SAMPLE TYPE
SAMPLE NUMBERS AA- CF3-1
SAMPLING METHOD
SAMPLED BY D. Powell DATE SAMPLED 5-8-79
CONTAINER TYPE SAMPLE VOLUME
SAMPLE MATRIX

LOG REMARKS

ANALYTICAL DATA

DATE REPORT DUE

SAMPLE NO.	PARAMETERS	ANALYTICAL METHOD	VALUES	DATE OF ANALYSIS	REMARKS
-1	Pb	Atomic Absorption	5,500	5-25-79	filter
-2	↓	↓	1300	5-24-79	Probe rinse 430 ml
-3	↓	↓	50	5-25-79	imp 1,2 187 ml

SAMPLE INFORMATION
FOR LABORATORY OPERATIONS

DATE RECEIVED 5-14-79 LAB NO. 421

SAMPLING DATA

GEOGRAPHICAL ORIGIN Asarco- Tacoma
SAMPLING LOCATION conv. fugitive
SAMPLE TYPE
SAMPLE NUMBERS AA- CF3-2
SAMPLING METHOD
SAMPLED BY D. Powell DATE SAMPLED 5-10-79
CONTAINER TYPE SAMPLE VOLUME
SAMPLE MATRIX

LOG REMARKS

ANALYTICAL DATA

DATE REPORT DUE

SAMPLE NO.	PARAMETERS	ANALYTICAL METHOD	VALUES ug Pb	DATE OF ANALYSIS	REMARKS
-1	Pb	Atomic Absorption	6600	5-25-79	filter
-2	↓	↓	2500	5-24-79	Probe rinse 365 ml
-3	↓	↓	170	5-24-79	imp 1,2 152 ml

SAMPLE INFORMATION
FOR LABORATORY OPERATIONS

DATE RECEIVED 5-17-79 LAB NO. 422

SAMPLING DATA

GEOGRAPHICAL ORIGIN Asarco – Tacoma
SAMPLING LOCATION #183 charge
SAMPLE TYPE process
SAMPLE NUMBERS
SAMPLING METHOD grab
SAMPLED BY Asarco · personnel DATE SAMPLED 5-14-79
CONTAINER TYPE SAMPLE VOLUME
SAMPLE MATRIX

LOG REMARKS

ANALYTICAL DATA

DATE REPORT DUE

SAMPLE NO.	PARAMETERS	ANALYTICAL METHOD	VALUES % Pb	DATE OF ANALYSIS	REMARKS
-1	Pb	Atomic Absorption	0.056%	5-24-79	Blister Copper #2 Anode Pies
-2	↓	↓	6.62	5-25-79	Cu slag from #1 conv. going into #2 conv.
-3	↓	↓	5.02	5-25-79	Anode Slag to #2 conv. from Anode Charge #158 to charge 183
-4	↓	↓	4.33	5-25-79	Finish Cu Slag charge 183 from #2
-5	↓	↓	0.77%	5-24-79	conv. Flux Charge 183
-6	↓	↓	6.50	5-25-79	conv. Slag from charg 183

SAMPLE INFORMATION
FOR LABORATORY OPERATIONS

DATE RECEIVED 5-17-79 LAB NO. 423

SAMPLING DATA

GEOGRAPHICAL ORIGIN Asarco - Tacoma
SAMPLING LOCATION #183 charge
SAMPLE TYPE process
SAMPLE NUMBERS
SAMPLING METHOD grab
SAMPLED BY Asarco · personnel DATE SAMPLED 5-14-79
CONTAINER TYPE SAMPLE VOLUME
SAMPLE MATRIX

LOG REMARKS

ANALYTICAL DATA

DATE REPORT DUE

SAMPLE NO.	PARAMETERS	ANALYTICAL METHOD	VALUES %Pb	DATE OF ANALYSIS	REMARKS
-1	Pb	Atomic Absorption	1.01	5-24-79	Roaster Charge
-2	↓	↓	1.32	5-24-79	#2 conv. matte
-3	↓	↓	3.16	5-24-79	cyclone dust #2 conv.
-4	↓	↓	1.02	5-24-79	Roaster Calcine
-5	↓	↓	2.91	5-24-79	Ballon Flue Dust
-6	↓	↓	5.18	5-25-79	Crushed Reverts
-7	↓	↓	1.29	5-24-79	Fine metal from Cu slag from #1 conv going into #2 conv.
-8	↓	↓	2.31	5-24-79	metal from crushed reverts

SAMPLE INFORMATION
FOR LABORATORY OPERATIONS

DATE RECEIVED 5-17-79 LAB NO. 424

SAMPLING DATA

GEOGRAPHICAL ORIGIN Asarco - Tacoma
SAMPLING LOCATION #190 charge
SAMPLE TYPE process
SAMPLE NUMBERS
SAMPLING METHOD grab
SAMPLED BY Asarco personnel DATE SAMPLED 5-16-79
CONTAINER TYPE SAMPLE VOLUME
SAMPLE MATRIX

LOG REMARKS

ANALYTICAL DATA

DATE REPORT DUE

SAMPLE NO.	PARAMETERS	ANALYTICAL METHOD	VALUES % Pb	DATE OF ANALYSIS	REMARKS
-1	Pb	Atomic Absorption	5.46	5-24-79	#2 conv slag
-2	↓	↓	1.13	5-24-79	Roaster Calcine
-3	↓	↓	4.69	5-25-79	#2 conv Finish slag out
-4	↓	↓	2.72	5-24-79	#2 conv. crushed reverts
-5	↓	↓	1.04	5-24-79	#2 conv. Flux
-6	↓	↓	1.71	5-24-79	#2 conv. Matte

SAMPLE INFORMATION
FOR LABORATORY OPERATIONS

DATE RECEIVED 5-17-79 LAB NO. 425

SAMPLING DATA

GEOGRAPHICAL ORIGIN Asarco - Tacoma
SAMPLING LOCATION #190 charge
SAMPLE TYPE process
SAMPLE NUMBERS
SAMPLING METHOD grab
SAMPLED BY Asarco personnel DATE SAMPLED 5-17-79
CONTAINER TYPE SAMPLE VOLUME
SAMPLE MATRIX

LOG REMARKS

ANALYTICAL DATA

DATE REPORT DUE

SAMPLE NO.	PARAMETERS	ANALYTICAL METHOD	VALUES % Pb	DATE OF ANALYSIS	REMARKS
-1	Pb	Atomic Absorption	7.74	5-25-79	#2 conv. Finish slag going into charge #190
-2	↓	↓	3.90	5-24-79	#2 conv. cyclone dust
-3	↓	↓	1.19	5-24-79	Roaster Charge
-4	↓	↓	3.69	5-24-79	#2 conv charge 190 anode slag
-5	↓	↓	2.76	5-24-79	#2 conv. Ballon Flue Dust

SAMPLE INFORMATION
FOR LABORATORY OPERATIONS

DATE RECEIVED 5-17-79 LAB NO. 426

SAMPLING DATA

GEOGRAPHICAL ORIGIN Asarco - Tacoma
SAMPLING LOCATION Charge #185
SAMPLE TYPE process
SAMPLE NUMBERS
SAMPLING METHOD grab
SAMPLED BY Asarco personnel DATE SAMPLED 5-15-79
CONTAINER TYPE SAMPLE VOLUME
SAMPLE MATRIX

LOG REMARKS

ANALYTICAL DATA

DATE REPORT DUE

SAMPLE NO.	PARAMETERS	ANALYTICAL METHOD	VALUES % Pb	DATE OF ANALYSIS	REMARKS
-1	Pb	Atomic Absorption	3.59	5-24-79	#2 conv. Charge cyclone dust
-2	↓	↓	0.069	5-24-79	#2 Anode Pies
-3			2.93	5-24-79	Ballon Flue Dust
-4			1.14	5-24-79	Roaster Calcine
-5			7.47	5-25-79	#2 conv. finish slag (cu slag)
-6			4.35	5-24-79	charge 184 cu slag to conv #2 charge 185 (Cu slag from #2 conv. put back into #2 conv.

SAMPLE INFORMATION
FOR LABORATORY OPERATIONS

DATE RECEIVED 5-17-79 LAB NO. 427

SAMPLING DATA

GEOGRAPHICAL ORIGIN Asarco - Tacoma
SAMPLING LOCATION Charge #185
SAMPLE TYPE process
SAMPLE NUMBERS
SAMPLING METHOD grab
SAMPLED BY Asarco personnel DATE SAMPLED 5-15-79
CONTAINER TYPE SAMPLE VOLUME
SAMPLE MATRIX

LOG REMARKS

ANALYTICAL DATA

DATE REPORT DUE

SAMPLE NO.	PARAMETERS	ANALYTICAL METHOD	VALUES % Pb	DATE OF ANALYSIS	REMARKS
-1	Pb	Atomic Absorption	1.16	5-24-79	Roaster Feed 5-9-79
-2	↓	↓	1.05	5-24-79	Roaster Feed 5-10-79
-3	↓	↓	6.82	5-25-79	conv. slag
-4	↓	↓	1.01	5-24-79	conv. Flux
-5	↓	↓	3.14	5-24-79	#2 conv matte
-6	↓	↓	6.33	5-25-79	crushed reverts
-7	↓	↓	0.40	5-24-79	Roaster calcine

SAMPLE INFORMATION
FOR LABORATORY OPERATIONS

DATE RECEIVED 5-21-79 LAB NO. 428

SAMPLING DATA

GEOGRAPHICAL ORIGIN Asarco – Tacoma
SAMPLING LOCATION
SAMPLE TYPE process
SAMPLE NUMBERS
SAMPLING METHOD grab
SAMPLED BY Asarco personnel DATE SAMPLED 5-16-79
CONTAINER TYPE SAMPLE VOLUME
SAMPLE MATRIX

LOG REMARKS

ANALYTICAL DATA

DATE REPORT DUE

SAMPLE NO.	PARAMETERS	ANALYTICAL METHOD	VALUES % lb	DATE OF ANALYSIS	REMARKS
-1	Pb	Atomic Absorption	2.79	5-24-79	Aisle Reverts
-2	↓	↓	0.76	5-24-79	Roaster Charge
-3	↓	↓	1.04	5-24-79	Roaster Calcine
-4	↓	↓	0.090	5-24-79	Blister Copper
-5	↓	↓	2.96	5-24-79	Girder Grab over conv. #2 fugitive station one
-6	↓	↓	0.26	5-24-79	Fugitive metallic dust from conv. #2 blow
-7	↓	↓	1.71	5-24-79	Fugitive dust above conv #2, station 3
-8	↓	↓	120 µg	5-24-79	background contamination dust

SAMPLE INFORMATION
FOR LABORATORY OPERATIONS

DATE RECEIVED 5-21-79 LAB NO. 429

SAMPLING DATA

GEOGRAPHICAL ORIGIN Asarco - Tacoma
SAMPLING LOCATION conv. full cycle
SAMPLE TYPE
SAMPLE NUMBERS AA-CRO-3
SAMPLING METHOD
SAMPLED BY D. Powell DATE SAMPLED 5-15-79
CONTAINER TYPE SAMPLE VOLUME
SAMPLE MATRIX

LOG REMARKS

ANALYTICAL DATA

DATE REPORT DUE

SAMPLE NO.	PARAMETERS	ANALYTICAL METHOD	VALUES	DATE OF ANALYSIS	REMARKS
-1	Pb	Atomic Absorption	1050	5-24-79	filter
-2	↓	↓	37,000	5-24-79	Probe rinse 510 ml
-3	↓	↓	20	5-24-79	imp 1, 2 355 ml

SAMPLE INFORMATION
FOR LABORATORY OPERATIONS

DATE RECEIVED 5-21-79 LAB NO. 430

SAMPLING DATA

GEOGRAPHICAL ORIGIN Asarco - Tacoma
SAMPLING LOCATION conv. copper blow
SAMPLE TYPE
SAMPLE NUMBERS AA-CR-3
SAMPLING METHOD
SAMPLED BY D. Powell DATE SAMPLED 5-15-79
CONTAINER TYPE SAMPLE VOLUME
SAMPLE MATRIX

LOG REMARKS

ANALYTICAL DATA

DATE REPORT DUE

SAMPLE NO.	PARAMETERS	ANALYTICAL METHOD	VALUES in Pb	DATE OF ANALYSIS	REMARKS
-1	Pb	Atomic Absorption	1400	5-24-79	filter
-2	↓	↓	24,000	5-24-79	Probe rinse 515 ml
-3	↓	↓	60	5-24-79	imp 1,2 420 ml

SAMPLE INFORMATION
FOR LABORATORY OPERATIONS

DATE RECEIVED 5-21-79 LAB NO. 432

SAMPLING DATA

GEOGRAPHICAL ORIGIN Asarco - Tacoma
SAMPLING LOCATION conv. fugitive
SAMPLE TYPE
SAMPLE NUMBERS AA - CF2-3
SAMPLING METHOD
SAMPLED BY D. Powell DATE SAMPLED 5-15-79
CONTAINER TYPE SAMPLE VOLUME
SAMPLE MATRIX

LOG REMARKS

ANALYTICAL DATA

DATE REPORT DUE

SAMPLE NO.	PARAMETERS	ANALYTICAL METHOD	VALUES in ppb	DATE OF ANALYSIS	REMARKS
-1	Pb	Atomic Absorption	8000	5-25-79	filter
-2	↓	↓	3900	5-24-79	Probe rinse 420 ml
-3	↓	↓	20	5-25-79	imp 1,2 238 ml

SAMPLE INFORMATION
FOR LABORATORY OPERATIONS

DATE RECEIVED 5-21-79 LAB NO. 431

SAMPLING DATA

GEOGRAPHICAL ORIGIN Asarco - Tacoma
SAMPLING LOCATION converter fugitive
SAMPLE TYPE
SAMPLE NUMBERS A1-CF1-3
SAMPLING METHOD
SAMPLED BY D. Powell DATE SAMPLED 5-15-79
CONTAINER TYPE SAMPLE VOLUME
SAMPLE MATRIX

LOG REMARKS

ANALYTICAL DATA

DATE REPORT DUE

SAMPLE NO.	PARAMETERS	ANALYTICAL METHOD	VALUES µg/Dl	DATE OF ANALYSIS	REMARKS
-1	Pb	Atomic Absorption	11,500	5-25-79	filter
-2	↓	↓	1800 µg	5-24-79	Probe rinse 290 ml
-3	↓	↓	10	5-25-79	imp 1,2 410 ml

SAMPLE INFORMATION
FOR LABORATORY OPERATIONS

DATE RECEIVED 5-21-79 LAB NO. 433

SAMPLING DATA

GEOGRAPHICAL ORIGIN Asarco - Tacoma
SAMPLING LOCATION conv. fugitive
SAMPLE TYPE
SAMPLE NUMBERS AA-CF 3-3
SAMPLING METHOD
SAMPLED BY D. Powell DATE SAMPLED 5-15-79
CONTAINER TYPE SAMPLE VOLUME
SAMPLE MATRIX

LOG REMARKS

ANALYTICAL DATA

DATE REPORT DUE

SAMPLE NO.	PARAMETERS	ANALYTICAL METHOD	VALUES	DATE OF ANALYSIS	REMARKS
-1	Pb	Atomic Absorption	9400	5-25-79	filter
-2	↓	↓	3100	5-24-79	Probe rinse 340ml
-3	↓	↓	30	5-25-79	Imp 1,2 145ml