Note: This is a reference cited in *AP 42, Compilation of Air Pollutant Emission Factors, Volume I Stationary Point and Area Sources.* AP42 is located on the EPA web site at www.epa.gov/ttn/chief/ap42/

The file name refers to the reference number, the AP42 chapter and section. The file name "ref02_c01s02.pdf" would mean the reference is from AP42 chapter 1 section 2. The reference may be from a previous version of the section and no longer cited. The primary source should always be checked.

Ref 26

United States
Environmental Protection
Agency

Office of Air Quality
Planning and Standards
Research Triangle Park NC 27711

EMB Report 78-CUS-13
April 1979

Air

EPA

PRIMARY
COPPER SMELTING 12.3
AP-42 Section ~~7.3~~
Reference Number
~~27~~ 28

Arsenic Non-Ferrous Smelter

Emission Test Report Kennecott Copper Corporation Magna, Utah

AP-42
5th ed.
Section 12.3
#28

EMISSION TESTING OF KENNECOTT COPPER SMELTER
MAGNA, UTAH

TO

ENVIRONMENTAL PROTECTION AGENCY
Contract 68-02-2812
Work Assignment 29

By
Thomas Rooney
Delbert Powell
Dave Ringwald

One Space Park, Redondo Beach, Ca 90278

CONTENTS

Figures ii

Tables ii

1 Introduction. 1-2
2 Summary and Discussion of Results 3-4
3 Process Description . . . . . .
4 Location of Sampling Points 12-13
5 Sampling and Analytical Procedure 24-27

Appendices

A. Field and Analytical Data 30

1 Traverse point locations 31
2 Field data sheets. 33
3 Analytical data sheets 72
4 Meter box calibration data 90

B. Sample Calculations 104

C. Daily Activity Log. 110-112

FIGURES

Number		Page
1	Matte tapping	14
2	Slag tapping	15
3	Slag tapping fugitive emission duct traverse point location	16-17
4	Plant schematic - the matte tapping and slag tapping fugitive emission systems	18
5	Acid plant inlet	19
6	Converter fugitive emission duct	20
7	Plant schematic - converter fugitive emission system	21
8	Concentrate dryer stack	22
9	Plant schematic - concentrate dryer fugitive emission system	23
10	Arsenic/sulfur dioxide sampling train	25

TABLES

Number		Page
1	Matte Tapping Arsenic/SO_2 Results	5
2	Slag Tapping Arsenic/SO_2 Results	6
3	Acid Plant Inlet Arsenic/SO_2 Results	7
4	Rollout Converter Fugitive Arsenic/SO_2 Results	8
5	Full Cycle Converter Fugitive Arsenic/SO_2 Results	9
6	Concentrate Dryer Arsenic/SO_2 Results	10
7	Process Sample Analysis Results	11

SECTION 1

INTRODUCTION

In accordance with the Environmental Protection Agency's program for developing new source performance standards, TRW participated in fugitive emission testing at the Kennecott copper smelter located in Magna, Utah. Testing was performed from October 30 - Novermber 15, 1978.

The testing program was developed to provide arsenic/sulfur dioxide data on the following environmental control systems: matte tapping fugitive emission system, slag tapping fugitive emission system, converter fugitive emission system, acid plant inlet, and concentrate dryer fugitive emission systems.

The matte tapping fugitive emission system operated on an intermittent basis during the loading operation of copper matte from the reactors to the large ladles. The system removed the fugitive air pollutants that were generated during this operation.

The slag tapping fugitive emission system operated on an intermittent basis during the loading of slag from the reactors to the large ladles. This system removed the fugitive emissions generated during the operation.

The converter fugitive emission system is comprised of a hooding system over the converters which removes the fugitive air pollutants that escape the converter ducting system. The acid plant inlet duct (converter ducting system) removes large amounts of air pollutants including sulfur dioxide from the converter process operation and the hot gases enter the sulfuric acid plant. The sulfuric acid plant then converts large amounts of sulfur dioxide into commercial grade sulfuric acid from the process exhaust gases. The converter process operates on a continuous cyclic operation.

The concentrate dryer emission system removes large amounts of moisture and fugitive dust from the rotating concentrate dryers. The emissions are passed through large cyclones and a wet scrubber, then the gases exit through a 150°F stack. The dryer operation works on a continuous basis with the concentrate feed being added as needed.

Testing at the Kennecott copper smelter consisted of the following tests.

Three arsenic/sulfur dioxide tests were performed on the matte tapping fugitive emissions system with the EPA process engineer coordinating the intermittent testing.

At the slag tapping fugitive emission duct, three arsenic/sulfur

dioxide tests were conducted with the EPA process engineer coordinating the intermittent sampling.

Testing the converter process operation required three tests to be performed during a given converter cycle. Two tests were performed on the converter fugitive emission system while one test was conducted at the acid plant inlet duct. The two tests conducted at the converter fugitive emission system during the converter cycle consisted of one test being performed during the complete cycle, and a second test being performed only during the converter roll-out segment of the cycle. The tests at the acid plant inlet duct and at the converter fugitive emission system were coordinated under the direction of the EPA process engineer. Three arsenic/sulfur dioxide tests were performed at the acid plant inlet duct and the converter fugitive emission duct (complete cycle test). Two arsenic/sulfur dioxide tests were conducted during the converter roll-out phase of the converter cycle.

This report presents the results of the testing program. The following sections of the report contain: a summary of the results, descriptions of the sampling points, a description of the process, and delineation of the sampling and laboratory analytical procedures. The appendices contain field data, sample calculations and daily activity log.

SECTION 2

SUMMARY AND DISCUSSION OF RESULTS

The results of the testing program are summarized in Tables 1 - 5. The arsenic/sulfur dioxide data for the matte tapping fugitive emission system and slag tapping fugitive emission systems are presented in Tables 1 and 2, respectively. Acid plant inlet arsenic/sulfur dioxide results are given in Table 3. The converter fugitive emission system arsenic/sulfur dioxide results are presented in Tables 4 and 5. Table 4 presents the converter fugitive emissions tests during the complete cycle. The converter roll-out arsenic/sulfur dioxide data are presented in Table 5. Concentrate dryer emissions are reported in Table 6. All process sample analysis data are contained in Table 7.

The field sampling program encountered the following minor problems which are outlined below with respect to individual sampling locations.

During the field sampling at the matte tapping fugitive emission system and the slag tapping fugitive emission system, the sampling program required long days due to the intermittent process operation and days of reduced operation. At the slag tapping fugitive emission duct there were two modifications in the sampling procedure required. Only one port was located on the duct which required that both traverses be performed through the same port utilizing the pythagorean calculations. All equations and distances are shown in figure 3. The sampling train was modified to allow for the two traverses through the single sampling port. A teflon flex line was inserted between the probe and heater box to assist in maneuvering the probe into the proper placement. After the testing the flex line was cleaned with a probe brush and .1N NaOH. The solution was placed in the probe rinse bottle and saved for analysis.

Testing the converter fugitive emission system and the acid plant inlet required TRW personnel to adjust the working schedule to fit the cyclic process operation of the converter unit. Due to lack of space at the converter fugitive emission duct sampling position, TRW was required to utilize the flex lines between the probes and heater boxes on each of the tests. After each test the flex line was cleaned with .1N NaOH and a probe brush. The solution was placed in the probe rinse bottle and saved for analysis.

Weather forced TRW personnel to curtail the field sampling on Friday, November 10, 1978. TRW personnel returned on Monday, November 12, 1978 to complete the field sampling on the concentrate dryer fugitive emission system.

Testing the concentrate dryer fugitive emission system required the test ports to be placed in the fiberglass stack. Due to the working space and the fiberglass stack, TRW utilized the flex line inserted between the probe and the heater box to assist in performing the sampling traverses.

Testing at the concentrate dryer fugitive emission system was performed under low ambient temperature which ranged from $20^{o}F$ to $30^{o}F$.

During the data reduction, the meter volume was back calculated to account for sulfur dioxide that was removed by the three 10% hydrogen peroxide impingers. The back calculation for sulfur dioxide was accomplished in the following order. First, parts per million sulfur dioxide at standard conditions was calculated. Then parts per million was converted to a fraction by dividing by 10^6. This number was added to one and the result multiplied by volume of gas collected through the dry gas meter at standard conditions. The results of multiplication yielded the actual gas volume at standard conditions collected.

TABLE 1 Matte Tapping Arsenic/SO_2 Results

RUN NUMBER	1		2		3		AVERAGE	
	ENGLISH UNITS	METRIC UNITS	ENGLISH UNITS	METRIC UNITS	ENGLISH UNITS	METRIC UNITS	ENGLISH UNITS	METRIC UNITS
I DATE	11/3/78	11/3/78	11/1/78	11/1/78	11/3/78	11/3/78		
II STACK PARAMETERS								
Pst - Static Pressure, "Hg (mmHg)	.01	.254	.01	.254	.01	.254	.01	.254
Ps - Stack Gas Pressure, "Hg Absolute (mmHg)	25.85	656.59	25.73	653.54	25.85	656.59	25.81	655.57
% CO_2 - Volume % Dry	0	0	0	0	0	0	0	0
% O_2 - Volume % Dry	20.	20.	20.	20.	20.	20.	20.	20.
SO_2 - Volume % Dry	.09	.09	.10	.10	.12	.12	.10	.10
% N_2 - Volume % Dry	79.91	79.91	79.90	79.90	79.88	79.88	79.90	79.90
Ts - Average Stack Temperature °F (°C)	126.3	52.3	110.6	43.7	119.1	48.4	118.7	48.1
% H_2O - % Moisture in Stack Gas, By Volume	1.4	1.4	1.	1.	0	0	.80	.80
As - Stack Area, FT^2 (M^2)	19.635	1.824	19.635	1.824	19.635	1.824	19.635	1.824
Md - Molecular Weight of Stack Gas, Dry Basis	28.84	28.84	28.83	28.83	28.85	28.85	28.84	28.84
Ms - Molecular Weight of Stack Gas, Wet Basis	28.69	28.69	28.72	28.72	28.85	28.85	28.75	28.75
Vs - Stack Gas Velocity, FT/SEC, (M/SEC)	54.18	16.51	52.42	15.98	47.27	14.41	51.29	15.63
Qa - Stack Gas Volumetric Flow at Stack Conditions, ACFM (NM^3/min)	63829.5	1808.2	61756.0	1749.5	55688.8	1577.6	60424.8	1711.8
Qs - Stack Gas Volumetric Flow at Standard Conditions, DSCFM (NM^3/min)	48967.9	1387.2	48644.6	1378.2	43867.9	1242.7	47161.8	1336.0
% EA - Percent Excess Air	4.7	4.7	4.7	4.7	4.7	4.7	4.7	4.7
III TEST CONDITIONS								
Pb - Barometric Pressure, "Hg (mmHg)	25.84	656.34	25.72	653.29	25.84	656.34	25.80	655.32
Dn - Sampling Nozzle Diameter, in. (mm)	.250	6.35	.250	6.35	.250	6.35	.250	6.35
T - Sampling Time, min	69.5	69.5	60.5	60.5	66.5	66.5	65.5	65.5
Vm - Sample Volume, ACF (M^3)	76.73	2.17	58.94	1.67	63.62	1.80	66.43	1.88
Np - Net Sampling Points	24.	24.	24.	24.	24.	24.	24.	24.
Cp - Pitot Tube Coefficient	.84	.84	.84	.84	.84	.84	.84	.84
Tm - Average Meter Temperature °F (°C)	75.7	24.3	71.9	22.2	77.1	25.1	74.9	23.9
Pm - Average Orifice Pressure Drop, "H_2O (mmH_2O)	3.19	81.03	2.93	74.42	2.42	61.47	2.85	72.31
Vlc - Condensate Collected (Impingers and Gel), mls	19.2	19.2	14.6	14.6	0	0	11.3	11.3
ΔP - Stack Velocity Head "H_2O (mmH_2O)	.72	18.29	.69	17.53	.56	14.22	.66	16.68
IV TEST CALCULATIONS								
Vw - Condensed Water Vapor, SDCF (NM^3)	.90	.03	.69	.02	0	0	.53	.02
Vm - Volume of Gas Sampled at Standard Conditions, DSCF (NM^3)	65.88	1.87	50.70	1.44	54.37	1.54	56.98	1.62
% H_2O - Percent Moisture, By Volume	1.4	1.4	1.0	1.0	0	0	.80	.80
Ms - Molecular Weight of Stack Gas, Wet Basis	28.69	28.69	28.72	28.72	28.85	28.85	28.75	28.75
Vs - Stack Velocity, FT/SEC (M/SEC)	51.85	15.80	50.89	15.51	45.72	13.93	49.49	15.08
% I - Percent Isokinetic	107.3	107.3	97.08	97.08	103.5	103.5	102.6	102.6
V ANALYTICAL DATA								
A) Arsenic Front Half								
Probe (mg)		1.058		1.428		3.321		1.9357
Cyclone (mg)		.220		.295		.750		.4217
Filter (mg)		1.278		1.723		4.071		2.3573
Arsenic Front Half Total (mg)								
PPM, (mg/M^3)	.2196	.6848	.3847	1.1996	.8476	2.6431	.4839	1.5092
#/HR, (kg/HR)	.1255	.0570	.2185	.0992	.4341	.1970	.2594	.1177
B) Arsenic - Impinger Collection								
Impinger #1, 2 (mg)		.254		1.148		.738		.7133
PPM, (mg/M^3)	.0436	.1361	.2563	.7993	.1536	.4792	.1512	.4715
#/HR, (kg/HR)	.0250	.0113	.1456	.0661	.0787	.0357	.0831	.0377
Impinger #3,4,5 (mg)								
PPM, mg/M^3)								
#/HR, (kg/HR)								
C) Arsenic - Impinger Total (mg)								
PPM, (mg/M^3)								
#/HR, (kg/HR)								
D) Total Arsenic (mg)		1.5320		2.8710		4.8090		3.0707
PPM, (mg/M^3)	.2632	.8209	.6409	1.9989	1.0011	3.1223	.6351	1.9807
#/HR, (kg/HR)	.1505	.0683	.3641	.1653	.5128	.2328	.3425	.1554
E) Total SO_2 (mg)		4681.46		3742.92		4907.95		4444.11
PPM		941.5505		978.1793		1196.0702		1038.6000
(mg/M^3)		2508.4326		2606.0173		3186.5116		2766.9871
#/HR, (kg/HR)	459.8695	208.7469	474.6541	215.4581	523.3389	237.5574	485.9542	220.5875

TABLE 2 Slag tapping Arsenic/SO_2 Results

RUN NUMBER	1		2		3		AVERAGE	
	ENGLISH UNITS	METRIC UNITS	ENGLISH UNITS	METRIC UNITS	ENGLISH UNITS	METRIC UNITS	ENGLISH UNITS	METRIC UNITS
I DATE	11/1/78	11/1/78	11/2/78	11/2/78	11/3/78	11/3/78		
II STACK PARAMETERS								
Pst - Static Pressure, "Hg (mmHg)	.06	1.52	.06	1.52	.06	657.86	0.6	1.52
Ps - Stack Gas Pressure, "Hg Absolute (mmHg)	25.75	654.06	25.78	654.81	25.90	1.52	25.81	655.57
% CO_2 - Volume % Dry	0	0	0	0	0	657.86	0	0
% O_2 - Volume % Dry	20.	20.	20.	20.	20.	0	20.	20.
% SO_2 - Volume % Dry	.003	.003	.003	.008	.004	.004	.005	.005
% N_2 - Volume % Dry	79.997	79.997	79.992	79.992	79.996	79.996	79.995	79.995
Ts - Average Stack Temperature °F (°C)	72.9	22.7	81.0	32.8	71.4	21.9	78.4	25.6
% H_2O - % Moisture in Stack Gas, By Volume	.3	.3	.9	.9	1.0	1.0	.7	.7
As - Stack Area, FT^2 (M^2)	19.635	1.824	19.635	1.824	19.635	1.824	29.635	1.824
Md - Molecular Weight of Stack Gas, Dry Basis	28.80	28.80	28.81	28.81	28.80	28.80	28.80	28.80
Ms - Molecular Weight of Stack Gas, Wet Basis	28.77	28.77	28.72	28.72	28.69	28.69	28.73	28.73
Vs - Stack Gas Velocity, FT/SEC, (M/SEC)	43.240	13.179	42.017	12.807	38.788	11.823	41.348	12.603
Qa - Stack Gas Volumetric Flow at Stack Conditions, ACFM (NM^3/min)	50941.0	1443.1	49500.2	1402.3	45696.1	1294.5	48712.4	1380.0
Qs - Stack Gas Volumetric Flow at Standard Conditions, DSCFM (NM^3/min)	43307.8	1226.9	40541.4	1148.5	38914.0	1102.4	40921.1	1159.3
% EA - Percent Excess Air	4.7	4.7	4.7	4.7	4.7	4.7	4.7	4.7
III TEST CONDITIONS								
Pb - Barometric Pressure, "Hg (mmHg)	25.69	652.53	25.72	653.29	25.84	656.34	25.75	654.05
Dn - Sampling Nozzle Diameter, in. (mm)	.250	6.35	.309	7.85	.309	7.85	.289	7.35
T - Sampling Time, min	60.	60.	120.	120.	120.	120	100.	100.
Vm - Sample Volume, ACF (m^3)	47.40	1.34	138.06	3.91	139.37	3.95	108.28	3.07
Np - Net Sampling Points	24.	24.	24.	24.	24.	24.	24.	24.
Cp - Pitot Tube Coefficient	.84	.84	.84	.84	.84	.84	.84	.84
Tm - Average Meter Temperature °F (°C)	74.6	23.7	67.4	19.7	76.0	24.4	72.7	22.6
Pm - Average Orifice Pressure Drop, "H_2O (mmH_2O)	1.89	48.01	4.33	110.0	4.03	102.36	3.47	86.79
Vlc - Condensate Collected (Impingers and Gel), mls	2.7	2.7	23.3	23.3	26.0	26.0	17.3	17.3
ΔP - Stack Velocity Head "H_2O (mmH_2O)	.504	12.80	.460	11.684	.408	10.363	.457	11.616
IV TEST CALCULATIONS								
Vw - Condensed Water Vapor, SDCF (Nm^3)	.13	.00	1.10	.03	1.22	.04	.82	.02
Vm - Volume of Gas Sampled at Standard Conditions, DSCF (Nm^3)	40.40	1.14	120.25	3.41	119.88	3.40	93.51	2.65
% H_2O - Percent Moisture, By Volume	.3	.3	.9	.9	1.0	1.0	.7	.7
Ms - Molecular Weight of Stack Gas, Wet Basis	28.77	28.77	28.72	28.72	28.69	28.69	28.73	28.73
Vs - Stack Velocity, FT/SEC (M/SEC)	43.240	13.179	42.017	12.807	38.788	11.823	41.348	12.603
% I - Percent Isokinetic	89.9	39.9	93.6	93.6	97.	97.	93.5	93.5
V ANALYTICAL DATA								
A) Arsenic Front Half								
Probe (mg)		.580		.930		.315		.6083
Cyclone (mg)								
Filter (mg)		.210		.065		.085		.1200
Arsenic Front Half Total (mg)		.790		.995		.400		.7283
ppm, (mg/m^3)	.2213	.6903	.0937	.2921	.0378	.1178	.1176	.3667
#/hr, (kg/hr)	.1119	.0508	.0441	.0201	.0172	.0078	.0578	.0262
B) Arsenic - Impinger Collection								
Impinger #1, 2 (mg)		.147		1.591		.106		.6147
ppm, (mg/m^3)	.0412	.1284	.1498	.4670	.0100	.0312	.0670	.2089
#/hr, (kg/hr)	.0208	.0095	.0709	.0322	.0045	.0021	.0321	.0146
Impinger #3,4,5 (mg)								
ppm, (mg/m^3)								
#/hr, (kg/hr)								
C) Arsenic - Impinger Total (mg)								
ppm, (mg/m^3)								
#/hr, (kg/hr)								
D) Total Arsenic (mg)		.9370		2.5860		.5060		1.3430
ppm, (mg/m^3)	.2625	.8187	.2434	.7591	.0478	.1490	.1846	.5756
#/hr, (kg/hr)	.1327	.0603	.1152	.0523	.0217	.0099	.0899	.0408
E) Total SO_2 (mg)		78.68		766.82		389.47		412.3233
ppm		25.8047		84.7141		43.0470		51.1886
(mg/m^3)		58.7476		225.6910		114.6838		136.1741
#/hr, (kg/hr)	11.1467	5.0598	34.2555	15.5496	16.7082	7.5943	20.7035	9.3979

TABLE 3 Acid Plant Inlet Arsenic/SO_2 Results

RUN NUMBER	1		2		3		AVERAGE	
	ENGLISH UNITS	METRIC UNITS	ENGLISH UNITS	METRIC UNITS	ENGLISH UNITS	METRIC UNITS	ENGLISH UNITS	METRIC UNITS
I DATE	11/6/78	11/6/78	11/7/78	11/7/78	11/8/78	11/8/78		
II STACK PARAMETERS								
Pst - Static Pressure, "Hg (mmHg)	- .26	-6.60	- .26	-6.60	- .26	-6.60	- .26	-6.60
Ps - Stack Gas Pressure, "Hg Absolute (mmHg)	25.72	653.29	25.42	645.67	25.72	653.29	25.62	650.75
% CO_2 - Volume % Dry	0	0	0	0	0	0	0	0
% O_2 - Volume % Dry	20.	20.	20.	20.	20.	20.	20.	20.
SO_2 - Volume % Dry	3.9	3.9	2.4	2.4	3.0	3.0	3.1	3.1
% N_2 - Volume % Dry	76.10	76.10	77.60	77.60	77.0	77.0	76.9	76.9
Ts - Average Stack Temperature °F (°C)	420.8	216.0	476.2	246.8	409.4	209.7	435.5	224.2
% H_2O - % Moisture in Stack Gas, By Volume	5.0	5.0	3.0	3.0	4.0	4.0	4.0	4.0
As - Stack Area, ft^2 (m^2)	19.635	1.824	19.635	1.824	19.635	1.824	19.635	1.824
Md - Molecular Weight of Stack Gas, Dry Basis	30.21	30.21	29.67	29.67	29.88	29.88	29.92	29.92
Ms - Molecular Weight of Stack Gas, Wet Basis	29.60	29.60	29.32	29.32	29.40	29.40	29.44	29.44
Vs - Stack Gas Velocity, ft/sec, (m/sec)	83.19	25.36	81.68	24.90	75.61	23.05	80.16	24.44
Qa - Stack Gas Volumetric Flow at Stack Conditions, ACFM (Nm^3/min)	98006.1	2776.4	96227.2	2726.0	89076.1	2523.4	94436.65	2675.3
Qs - Stack Gas Volumetric Flow at Standard Conditions, DSCFM (Nm^3/min)	47978.1	1359.2	44724.8	1267.0	44643.3	1264.7	45782.1	1297.0
% EA - Percent Excess Air	4.7	4.7	4.7	4.7	4.7	4.7	4.7	4.7
III TEST CONDITIONS								
Pb - Barometric Pressure, "Hg (mmHg)	25.98	659.89	25.68	652.27	25.98	659.89	25.88	657.35
Dn - Sampling Nozzle Diameter, in. (mm)	.180	4.48	.190	4.83	.180	4.48	.183	4.60
T - Sampling Time, min	124.	124.	119.	119.	120.	120.	121.	121.
Vm - Sample Volume, ACF (m^3)	59.71	1.69	57.02	1.62	57.27	1.62	58.00	1.64
Np - Net Sampling Points	24.	24.	24.	24.	24.	24.	24.	24.
Cp - Pitot Tube Coefficient	.84	.84	.84	.84	.84	.84	.84	.84
Tm - Average Meter Temperature °F (°C)	64.2	17.9	74.8	23.8	65.0	18.3	68.0	20.0
Pm - Average Orifice Pressure Drop, "H_2O (mmH_2O)	.69	17.53	.82	20.83	.60	15.24	.70	17.87
Vlc - Condensate Collected (Impingers and Gel), mls	56.2	56.2	32.4	32.4	38.2	38.2	42.3	42.3
Δp - Stack Velocity Head "H_2O (mmH_2O)	1.16	29.46	1.03	26.16	.98	24.89	1.06	26.84
IV TEST CALCULATIONS								
Vw - Condensed Water Vapor, SDCF (Nm^3)	2.65	.06	1.53	.04	1.80	.05	1.99	.06
Vm - Volume of Gas Sampled at Standard Conditions, DSCF (Nm^3)	50.38	1.43	48.41	1.37	49.57	1.40	49.45	1.40
% H_2O - Percent Moisture, By Volume	5.0	5.0	3.0	3.0	4.0	4.0	4.0	4.0
Ms - Molecular Weight of Stack Gas, Wet Basis	29.60	29.60	29.32	29.32	29.40	29.40	29.44	29.44
Vs - Stack Velocity, ft/sec (m/sec)	83.19	25.36	81.68	24.90	75.61	23.05	80.16	24.44
% I - Percent Isokinetic	97.9	97.9	94.1	94.1	106.9	106.9	99.6	99.6
V ANALYTICAL DATA								
A) Arsenic Front Half								
Probe (mg)		1.100		.700		.290		
Cyclone (mg)								
Filter (mg)		10.000		9.900		6.300		
Arsenic Front Half Total (mg)		11.100		10.600		6.590		9.4300
ppm, (mg/m^3)	2.4938	7.7775	2.4784	7.7294	1.5048	4.6929	2.1590	6.7333
#/hr, (kg/hr)	1.3970	.6341	1.2942	.5875	.7844	.3560	1.1585	.5259
B) Arsenic - Impinger Collection								
Impinger #1, 2 (mg)		7.000		.068		.151		2.4063
ppm, (mg/m^3)	1.5727	4.9047	.0159	.0496	.0345	.1075	.5410	1.6873
#/hr, (kg/hr)	.8810	.3999	.0083	.0038	.0180	.0082	.3024	.1373
Impinger #3,4,5 (mg)								
ppm, mg/m^3)								
#/hr, (kg/hr)								
C) Arsenic - Impinger Total (mg)								
ppm, (mg/m^3)								
#/hr, (kg/hr)								
D) Total Arsenic (mg)		18.1000		10.6680		6.7410		11.8363
ppm, (mg/m^3)	4.0665	12.6822	2.4943	7.7790	1.5392	4.8004	2.7000	8.4205
#/hr, (kg/hr)	2.2780	1.0341	1.3025	.5913	.8023	.3642	1.4610	.6632
E) Total SO_2 (mg)		156011.2		87690.0		113481.2		119060.8
ppm		41031.131		24001.085		30333.385		31788.534
(mg/m^3)		109313.127		63942.512		80812.717		84689.452
#/hr, (kg/hr)	19635.233	8912.9518	10706.778	4860.0898	13506.931	6131.1535	14616.314	6634.7317

TABLE 4 Rollout Converter Fugitive Arsenic/SO_2 Results

RUN NUMBER	1		2		3		AVERAGE	
	ENGLISH UNITS	METRIC UNITS	ENGLISH UNITS	METRIC UNITS	ENGLISH UNITS	METRIC UNITS	ENGLISH UNITS	METRIC UNITS
I DATE	11/6/78	11/6/78	11/8/78	11/6/78				
II STACK PARAMETERS								
Pst - Static Pressure, "Hg (mmHg)	- .38	-9.65	- .38	-9.65			- .38	-9.65
Ps - Stack Gas Pressure, "Hg Absolute (mmHg)	25.52	648.21	25.52	648.21			25.52	648.21
% CO_2 - Volume % Dry	-	-	-	-			-	-
% O_2 - Volume % Dry	20.	20.	20.	20.			20.	20.
SO_2 - Volume % Dry	.03	.03	.05	.05			.04	.04
% N_2 - Volume % Dry	79.97	79.97	79.95	79.95			79.96	79.96
Ts - Average Stack Temperature °F (°C)	100.3	37.9	106.4	41.3			103.4	39.6
% H_2O - % Moisture in Stack Gas, By Volume	1.0	1.0	1.0	1.0			1.0	1.0
As - Stack Area, ft^2 (m^2)	22.17	2.06	22.17	2.06			22.17	2.06
Mo - Molecular Weight of Stack Gas, Dry Basis	28.81	28.81	28.82	28.82			28.82	28.82
Ms - Molecular Weight of Stack Gas, Wet Basis	28.70	28.70	28.71	28.71			28.71	28.71
Vs - Stack Gas Velocity, ft/sec, (m/sec)	78.70	23.99	78.10	23.80			78.40	75.93
Qa - Stack Gas Volumetric Flow at Stack Conditions, ACFM (Nm^3/min)	104686.7	2965.6	103888.6	2943.0			104287.7	2954.3
Qs - Stack Gas Volumetric Flow at Standard Conditions, DSCFM (Nm^3/min)	83302.7	2359.9	81777.3	2316.6			82540.0	2338.3
% EA - Percent Excess Air	4.7	4.7	4.7	4.7			4.7	4.7
III TEST CONDITIONS								
Pb - Barometric Pressure, "Hg (mmHg)	25.89	657.61	25.89	657.61			25.89	657.61
Dn - Sampling Nozzle Diameter, in. (mm)	.187	4.75	.187	4.75			.187	4.75
T - Sampling Time, min	88.	88.	65.	65.			76.5	76.5
Vm - Sample Volume, ACF (m^3)	74.75	2.12	56.04	1.59			65.40	1.86
Np - Net Sampling Points	42.	42.	50.	50.			46.	46.
Cp - Pitot Tube Coefficient	.84	.84	.84	.84			.84	.84
Tm - Average Meter Temperature °F (°C)	69.9	21.1	73.6	23.1			71.8	22.1
Pm - Average Orifice Pressure Drop, "H_2O (mmH_2O)	2.13	54.1	2.10	53.3			2.12	53.7
Vlc - Condensate Collected (Impingers and Gel), mls	20.1	20.1	7.3	7.3			13.7	13.7
ΔP - Stack Velocity Head "H_2O (mmH_2O)	1.57	39.88	1.53	38.9			1.55	39.39
IV TEST CALCULATIONS								
Vw - Condensed Water Vapor, SDCF (Nm^3)	.95	.03	.34	.01			.65	.02
Vm - Volume of Gas Sampled at Standard Conditions, DSCF (Nm^3)	64.81	1.84	45.45	1.30			55.13	1.57
% H_2O - Percent Moisture, By Volume	1.0	1.0	1.0	1.0			1.0	1.0
Ms - Molecular Weight of Stack Gas, Wet Basis	28.70	28.70	28.71	28.71			28.71	28.71
Vs - Stack Velocity, ft/sec (m/sec)	78.70	23.99	78.10	23.80			78.40	15.93
% I - Percent Isokinetic	103.2	103.2	99.8	99.8			101.5	101.5
V ANALYTICAL DATA								
A) Arsenic Front Half								
Probe (mg)		.460		1.250				.8550
Cyclone (mg)								
Filter (mg)		330		.340				.3350
Arsenic Front Half Total (mg)		.790		1.590				1.1900
ppm, (mg/m^3)	.1380	.4303	.3960	1.2349			.2670	.8326
#/hr, (kg/hr)	.1342	.0609	.3781	.1716			.2561	.1163
B) Arsenic - Impinger Collection								
Impinger #1, 2 (mg)		.020		.080				.050
ppm, (mg/m^3)	.0035	.0109	.0109	.0621			.0117	.0365
#/hr, (kg/hr)	.0034	.0015	.0190	.0086			.0112	.0051
Impinger #3,4,5 (mg)								
ppm, (mg/m^3)								
#/hr, (kg/hr)								
C) Arsenic - Impinger Total (mg)								
ppm, (mg/m^3)								
#/hr, (kg/hr)								
D) Total Arsenic (mg)		.8100		1.6700				1.2400
ppm, (mg/m^3)	.1415	.4412	.4159	1.2971			.2787	.8691
#/hr, (kg/hr)	.1376	.0625	.3971	.1803			.2674	.1214
E) Total SO_2 (mg)		1637.67		1676.45				1657.06
ppm		334.8114		488.7340				411.7727
(mg/m^3)		891.9881		1302.0613				1097.0247
#/hr, (kg/hr)	278.1916	126.2785	398.6437	180.9549			338.4177	153.6157

TABLE 5 Full Cycle Converter Fugitive Arsenic/SO_2 Results

RUN NUMBER	1		2		3		AVERAGE	
	ENGLISH UNITS	METRIC UNITS	ENGLISH UNITS	METRIC UNITS	ENGLISH UNITS	METRIC UNITS	ENGLISH UNITS	METRIC UNITS
I DATE	11/6/78	11/6/78	11/8/78	11/8/78	11/9/78	11/9/78		
II STACK PARAMETERS								
Pst - Static Pressure, "Hg (mmHg)	- .38	-9.65	- .38	-9.65	- .38	-9.65	- .38	-9.65
Ps - Stack Gas Pressure, "Hg Absolute (mmHg)	25.51	647.95	25.60	650.24	25.61	650.49	25.57	649.56
% CO_2 - Volume % Dry	0	0	0	0	0	0	0	0
% O_2 - Volume % Dry	20	20	20	20	20	20	20	20
% CO - Volume % Dry	.09	.09	.14	.14	.33	.33	.19	.19
% N_2 - Volume % Dry	79.91	79.91	79.86	79.86	79.67	79.67	79.81	79.81
Ts - Average Stack Temperature °F (°C)	104.9	40.5	103.1	39.5	61.3	16.3	89.8	32.1
% H_2O - % Moisture in Stack Gas, By Volume	0	0	.8	.8	1.0	1.0	.6	.6
As - Stack Area, ft^2 (m^2)	22.17	2.06	22.17	2.06	22.17	2.06	22.17	2.06
Md - Molecular Weight of Stack Gas, Dry Basis	28.83	28.83	28.85	28.85	28.92	28.92	28.87	28.87
Ms - Molecular Weight of Stack Gas, Wet Basis	28.83	28.83	28.76	28.76	28.81	28.81	28.80	28.80
Vs - Stack Gas Velocity, ft/sec, (m/sec)	89.32	27.22	85.19	25.97	81.43	24.82	85.31	26.00
Qa - Stack Gas Volumetric Flow at Stack Conditions, ACFM (Nm^3/min)	118813.5	3365.8	113319.7	3210.2	108318.2	3068.5	113483.8	3214.8
Qs - Stack Gas Volumetric Flow at Standard Conditions, DSCFM (Nm^3/min)	94684.1	2682.3	90187.0	2554.9	92967.4	2633.6	92612.8	2623.6
% EA - Percent Excess Air	4.7	4.7	4.7	4.7	4.7	4.7	4.7	4.7
III TEST CONDITIONS								
Pb - Barometric Pressure, "Hg (mmHg)	25.89	657.61	25.98	659.89	25.98	659.89	25.95	659.13
Dn - Sampling Nozzle Diameter, in. (mm)	.187	4.75	.187	4.75	.187	4.75	.187	4.75
T - Sampling Time, min	188.5	188.5	181	181	182.5	182.5	184	184
Vm - Sample Volume, ACF (m^3)	179.91	5.10	168.20	4.76	152.45	4.32	166.85	4.73
Np - Net Sampling Points	72	72	72	72	72	72	72	72
Cp - Pitot Tube Coefficient	.84	.84	.84	.84	.84	.84	.84	.84
Tm - Average Meter Temperature °F (°C)	77.7	25.4	77.4	25.2	56.5	13.6	70.5	21.4
Pm - Average Orifice Pressure Drop, "H_2O (mmH_2O)	2.86	72.60	2.45	62.23	2.60	66.04	2.64	66.96
Vlc - Condensate Collected (Impingers and Gel), mls	0	0	24.6	24.6	30.4	30.4	18.3	18.3
ΔP - Stack Velocity Head "H_2O (mmH_2O)	2.01	51.05	1.84	46.74	1.82	46.23	1.89	48.01
IV TEST CALCULATIONS								
Vw - Condensed Water Vapor, SDCF (Nm^3)	0	0	1.16	.03	1.43	.04	.86	.02
Vm - Volume of Gas Sampled at Standard Conditions, DSCF (Nm^3)	154.05	4.36	144.44	4.09	136.26	3.86	144.92	4.10
% H_2O - Percent Moisture, By Volume	0	0	.8	.8	1.0	1.0	.6	.6
Ms - Molecular Weight of Stack Gas, Wet Basis	28.83	28.83	28.76	28.76	28.81	28.81	28.80	28.80
Vs - Stack Velocity, ft/sec (m/sec)	89.32	27.22	85.19	25.97	81.43	24.82	85.31	26.00
% I - Percent Isokinetic	100.8	100.8	103.3	103.3	93.8	93.8	99.3	99.3
V ANALYTICAL DATA								
A) Arsenic Front Half								
Probe (mg)		2.655		1.100		2.600		2.1183
Cyclone (mg)		.130		.125		1.300		.5183
Filter (mg)		2.785		1.225		3.900		2.6367
Arsenic Front Half Total (mg)								
ppm, (mg/m^3)	.2046	.6382	.0960	.2994	.3240	1.0103	.2082	.6493
#/hr, (kg/hr)	.2262	.1027	.1011	.0459	.3517	.1596	.2263	.1027
B) Arsenic - Impinger Collection								
Impinger #1, 2 (mg)		.615		1.640		1.056		1.1037
ppm, (mg/m^3)	.0452	.1409	.1285	.4008	.0877	.2736	.0871	.2718
#/hr, (kg/hr)	.0500	.0227	.1353	.0614	.0952	.0432	.0935	.0424
Impinger #3,4,5 (mg)								
ppm, mg/m^3)								
#/hr, (kg/hr)								
C) Arsenic - Impinger Total (mg)								
ppm, (mg/m^3)								
#/hr, (kg/hr)								
D) Total Arsenic (mg)		3.4000		2.8650		4.9560		3.7403
ppm, (mg/m^3)	.2498	.7791	.2245	.7002	.4117	1.2839	.2953	.9211
#/hr, (kg/hr)	.2762	.1254	.2364	.1073	.4469	.2028	.3198	.1452
E) Total SO_2 (mg)		10763.42		15803.44		33686.3		20084.4
ppm		925.7729		1449.7063		3275.6750		1883.7181
(mg/m^3)		2466.3987		3862.2364		8726.8926		5018.5093
#/hr, (kg/hr)	874.3011	396.8684	1304.0778	591.9554	3037.4631	1378.7843	1738.6140	789.2029

TABLE 6 Concentrate Dryer Arsenic/SO_2 Results

RUN NUMBER	1		2		3		AVERAGE	
	ENGLISH UNITS	METRIC UNITS	ENGLISH UNITS	METRIC UNITS	ENGLISH UNITS	METRIC UNITS	ENGLISH UNITS	METRIC UNITS
I DATE	11/14/78	11/14/78	11/14/78	11/14/78	11/14/78	11/14/78	11/14/78	11/14/78
II STACK PARAMETERS								
Pst - Static Pressure, "Hg (mmHg)	-	-	-	-	-	-	-	-
Ps - Stack Gas Pressure, "Hg Absolute (mmHg)	25.98	659.89	25.98	659.89	25.98	659.89	25.98	659.89
% CO_2 - Volume % Dry	-	-	-	-	-	-	-	-
% O_2 - Volume % Dry	20.	20.	20.	20.	20.	20.	20.	20.
% SO_2 - Volume % Dry	.06	.06	.07	.07	.07	.07	.07	.07
% N_2 - Volume % Dry	79.94	79.94	79.93	79.93	79.93	79.93	79.93	79.93
Ts - Average Stack Temperature °F (°C)	166.1	74.5	129.3	54.1	118.3	47.9	137.9	58.8
% H_2O - % Moisture in Stack Gas, By Volume	18.1	18.1	18.2	18.2	15.6	15.6	17.3	17.3
As - Stack Area, ft^2 (m^2)	40.34	3.75	40.34	3.75	40.34	3.75	40.34	3.75
Md - Molecular Weight of Stack Gas, Dry Basis	28.82	28.82	28.82	28.82	28.82	28.82	28.82	28.82
Ms - Molecular Weight of Stack Gas, Wet Basis	26.86	26.86	26.85	26.85	27.13	27.13	26.95	26.95
Vs - Stack Gas Velocity, ft/sec, (m/sec)	29.96	9.13	29.37	8.95	29.16	8.89	29.50	8.99
Qa - Stack Gas Volumetric Flow at Stack Conditions, ACFM (Nm^3/min)	72515.2	2054.3	71087.2	2013.8	70578.9	1999.4	71393.8	2022.5
Qs - Stack Gas Volumetric Flow at Standard Conditions, DSCFM (Nm^3/min)	43489.1	1232.0	38676.6	1095.7	47225.4	1337.8	43130.4	1221.8
% EA - Percent Excess Air	4.7	4.7	4.7	4.7	4.7	4.7	4.7	4.7
III TEST CONDITIONS								
Pb - Barometric Pressure, "Hg (mmHg)	25.98	659.89	25.98	659.89	25.98	659.89	25.98	659.89
Dn - Sampling Nozzle Diameter, in. (mm)	.360	9.23	.360	9.23	.360	9.23	.360	9.23
T - Sampling Time, min	90.	90.	90.	90.	90.	90.	90.	90.
Vm - Sample Volume, ACF (m^3)	80.52	2.28	80.55	2.28	80.52	2.28	80.53	2.28
Np - Net Sampling Points	12.	12.	12.	12.	12.	12.	12.	12.
Cp - Pitot Tube Coefficient	.84	.84	.84	.84	.84	.84	.84	.84
Tm - Average Meter Temperature °F (°C)	57.6	14.2	59.9	15.5	47.5	8.61	55.0	12.8
Pm - Average Orifice Pressure Drop, "H_2O (mmH_2O)	2.29	58.17	2.26	57.4	2.31	58.7	2.29	58.09
Vlc - Condensate Collected (Impingers and Gel), mls	337.5	337.5	337.6	337.6	288.0	288.0	321.0	321.0
ΔP - Stack Velocity Head "H_2O (mmH_2O)	.194	4.93	.198	5.03	.201	5.11	.198	5.02
IV TEST CALCULATIONS								
Vw - Condensed Water Vapor, SDCF (Nm^3)	15.89	.45	15.89	.45	13.56	.38	15.11	.43
Vm - Volume of Gas Sampled at Standard Conditions, DSCF (Nm^3)	71.75	2.03	71.46	2.02	73.19	2.07	71.80	2.04
% H_2O - Percent Moisture, By Volume	18.1	18.1	18.2	18.2	15.6	15.6	17.3	17.3
Ms - Molecular Weight of Stack Gas, Wet Basis	26.86	26.86	26.85	26.85	27.13	27.13	26.95	26.95
Vs - Stack Velocity, ft/sec (m/sec)	29.96	9.13	29.37	8.95	29.16	8.89	29.50	8.99
% I - Percent Isokinetic	102.8	102.8	98.4	98.4	96.5	96.5	99.2	99.2
V ANALYTICAL DATA								
A) Arsenic Front Half								
Probe (mg)		.146		2.098		3.915		2.0530
Cyclone (mg)								
Filter (mg)		.004		.042		.470		.1720
Arsenic Front Half Total (mg)		.150		2.140		4.385		2.2250
ppm, (mg/m^3)	.0237	.0738	.3330	1.0571	.6781	2.1149	.3469	1.0819
#/hr, (kg/hr)	.0120	.0055	.1531	.0695	.3739	.1697	.1797	.0816
B) Arsenic - Impinger Collection								
Impinger #1, 2 (mg)		.028		.028		.340		.1320
ppm, (mg/m^3)	.0044	.0138	.0044	.0138	.0526	.1640	.0205	.0639
#/hr, (kg/hr)	.0022	.0010	.0020	.0009	.0290	.0132	.0111	.0050
Impinger #3,4,5 (mg)								
ppm, mg/m^3)								
#/hr, (kg/hr)								
C) Arsenic - Impinger Total (mg)								
ppm, (mg/m^3)								
#/hr, (kg/hr)								
D) Total Arsenic (mg)		.2780		2.1680		4.7250		2.3570
ppm, (mg/m^3)	.0281	.0876	.3434	1.0710	.7307	2.2789	.3672	1.1456
#/hr, (kg/hr)	.0143	.0065	.1551	.0704	.4029	.1829	.1908	.0866
E) Total SO_2 (mg)		3216.05		3715.94		4074.50		3668.83
ppm		593.9047		689.0037		737.6298		673.5127
(mg/m^3)		1582.2518		1835.6099		1965.1571		1794.3396
#/hr, (kg/hr)	257.6183	116.9398	265.7966	120.6521	346.4510	157.7172	290.2888	131.7697

TABLE 7 PROCESS SAMPLE ANALYSIS

SAMPLE	DATE SAMPLED	AS %
Converter 1	11/ 6/78	.009
Converter 2	11/ 6/78	.025
Converter 1	11/ 7/78	.180
Converter 2	11/ 7/78	.082
Converter 1	11/ 8/78	.0463
Converter 2	11/ 8/78	.0436
Furnace Matte	11/ 1/78	.174
Furnace Slag	11/ 1/78	.200
Furnace Matte	11/ 2/78	.0348
Furnace Slag	11/ 2/78	.0292
Furnace Matte	11/ 3/78	.085
Furnace Slag	11/ 3/78	.033
Furnace Concentrate Feed	11/ 2/78	.148
Furnace Concentrate Feed	11/ 3/78	.028
Finished Cu Anode	11/ 7/78	.049
Finished Cu Anode	11/ 8/78	.077
Concentrate before dryer	11/ 9/78	.043
Concentrate after dryer	11/ 9/78	.047
Concentrate before dryer	11/14/78 am	.017
Concentrate after dryer	11/14/78 am	.014
Concentrate before dryer	11/14/78 pm	.014
Concentrate after dryer	11/14/78 pm	.017
Dryer Cyclone Scrubber Water	11/ 9/78	18. ppm
Dryer Cyclone Scrubber Water	11/14/78 am	5.9ppm
Dryer Cyclone Scrubber Water	11/14/78 pm	2.5ppm

SECTION 4

LOCATION OF SAMPLING POINTS

Matte Tapping Fugitive Emission Ducts

Matte tapping fugitive emissions were collected through two ducts at the smelter. One duct evacuated fumes from the ladle area which was below the floor where tapping personnel worked, while the other duct carried fumes away from the tap hole area located above the floor. The two ducts ran parallel in a vertical direction to the roof which was approximately 120 feet above the ground. A crossover duct running diagonally connected the vertical ducts on the lower part of the vertical run. This crossover duct contained a damper that allowed all of the emissions to flow through only one of the two vertical ducts and although ports were installed on both vertical ducts above the roof, the damper in the crossover pipe routed all the emissions through a single vertical duct during the test. Drawings related to this site show dual ductwork, however, only one duct had flow during testing, and the matte tapping summary sheets show data for this duct only.

Samples from the single vertical matte tapping fugitive emission duct were taken above the roof approximately 120 feet above the ground. Sampling ports were located at a 90° angle to each other to allow for horizontal traverses during sampling. The nearest upstream flow disturbance was located greater than 8 diameters away from the sampling location. Twenty four traverse points were selected with twelve points on each traverse. Figure 1 is a schematic of the sampling location.

Slag Tapping Fugitive Emission Duct

Slag tapping fugitive emission samples were taken through a 60" vertical duct located approximately 120 feet above the ground. One sampling port was utilized for both horizontal traverses during sampling. The nearest upstream flow disturbance was located more than 8 duct diameters from the sampling position. The nearest downstream disturbance was a bend located 8' away from the sampling location. Twenty-four traverse points were selected with twelve points on each traverse. Figure 2 is a diagram of this sampling location.

Acid Plant Inlet

Acid plant inlet samples were taken through a 60" horizontal duct located approximately 8 feet above the ground. The sampling ports on the top and side of the duct allowed for vertical and horizontal traverses. The

nearest upstream flow disturbance was greater than 8 diameters away from the sampling position. The nearest downstream disturbance was located 1½ duct diameters away from the sampling position. Twenty-four traverse points were selected with twelve points on each traverse. Figure 5 is a schematic of the sampling location.

Converter Fugitive Emission Duct

Converter fugitive emission samples were taken through a 38" X 84" rectangular vertical duct located approximately 60 feet from the ground. Six sampling ports were evenly spaced across the 84" face of the duct that allowed for horizontal sampling. The nearest downstream flow disturbance was located approximately 5 feet (1 duct diameter equivalent) away from the sampling position. The nearest upstream disturbance was a bend located approximately 20 feet (4.75 duct diameter equivalent) away from the sampling points. Figure 6 is a schematic of this sampling location

Concentrate Dryer Stack

Concentrate dryer Fugitive samples were taken through a 84" diameter vertical fiberglass duct located approximately 110 feet above the ground. Two sampling ports placed at right angles allowed for horizontal traverses during sampling. The nearest downstream disturbance was the stack exit which was 40 feet (6 duct diameters) from the sampling points. The nearest upstream disturbance was two ducts entering the stack 56 feet (8 duct diameters) away from the sampling position. Figure 8 is a schematic of the concentrate dryer fugitive emission duct.

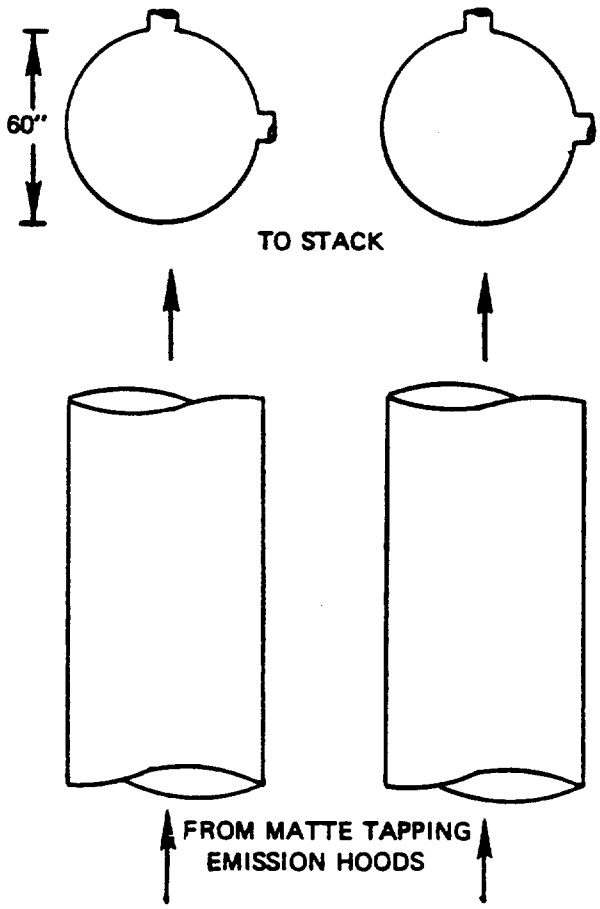

TRAVERSE POINT LOCATIONS

TRA-VERSE POINT LOCA-TIONS	FRACTION OF STACK I.D.	DISTANCE FROM INSIDE WALL (IN)
1	.021	1.28
2	.067	4.02
3	.118	7.09
4	.177	10.64
5	.250	15.00
6	.356	21.34
7	.644	38.66
8	.750	45.00
9	.823	49.36
10	.882	52.91
11	.933	55.98
12	.979	58.72

Figure 1. Matte tapping.

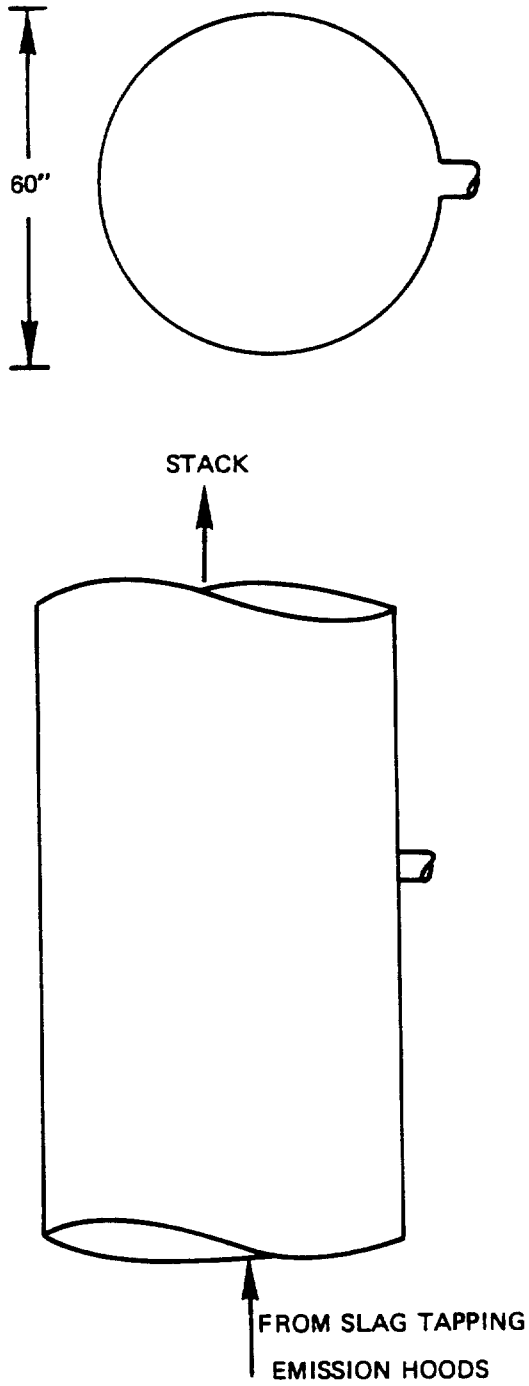

TRAVERSE POINT LOCATIONS

TRA-VERSE POINT LOCA-TIONS	FRACTION OF STACK I.D.	DISTANCE FROM INSIDE WALL (IN)
1	.021	1.28
2	.067	4.02
3	.118	7.09
4	.177	10.64
5	.250	15.00
6	.356	21.34
7	.644	38.66
8	.750	45.00
9	.823	49.36
10	.882	52.91
11	.933	55.98
12	.979	58.72

SLAG TAPPING

Figure 2. Slag tapping.

Figure 3. Slag tapping fugitive emission duct traverse point location procedure.

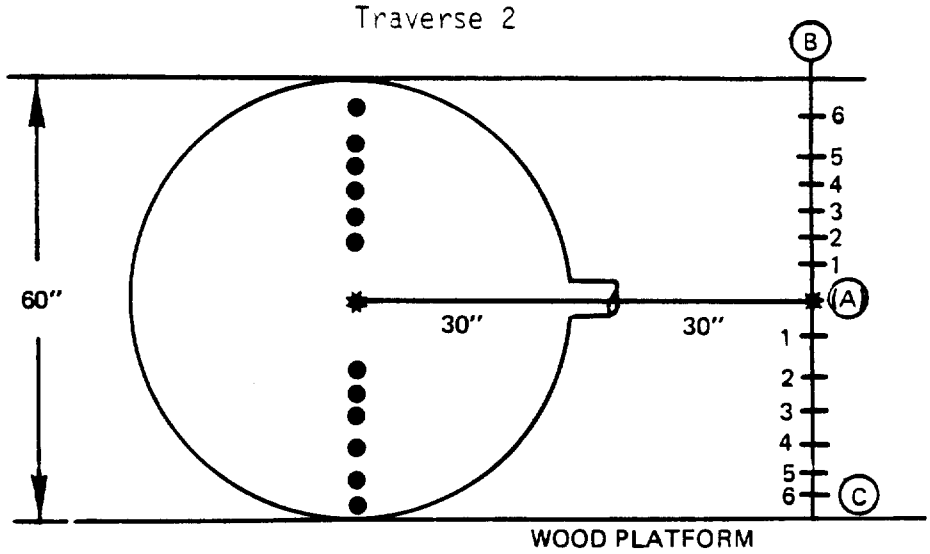

1. Points are marked on the wood platform as illustrated above. Note that 30" distance from the line marked on the wood platform and sampling port is the same as the radius of the duct.

2. Points marked on each line (AC) and (AB) from the center point A.

Point	Distance "
(AB)1	8.66
(AB)2	15.00
(AB)3	19.36
(AB)4	22.92
(AB)5	25.98
(AB)6	28.74
AC 1	8.66
AC 2	15.00
AC 3	19.36
AC 4	22.92
AC 5	25.98
AC 6	28.94

3. During Sampling

Point	Probe distance In Stack	Probe must intersect the line at the following points
1	41.55	AC 6
2	36.69	AC 5
3	37.75	AC 4
4	35.72	AC 3
5	33.54	AC 2
6	31.22	AC 1
7	31.22	AB 1
8	33.54	AB 2
9	35.72	AB 3
10	37.75	AB 4
11	39.69	AB 5
12	41.55	AB 6

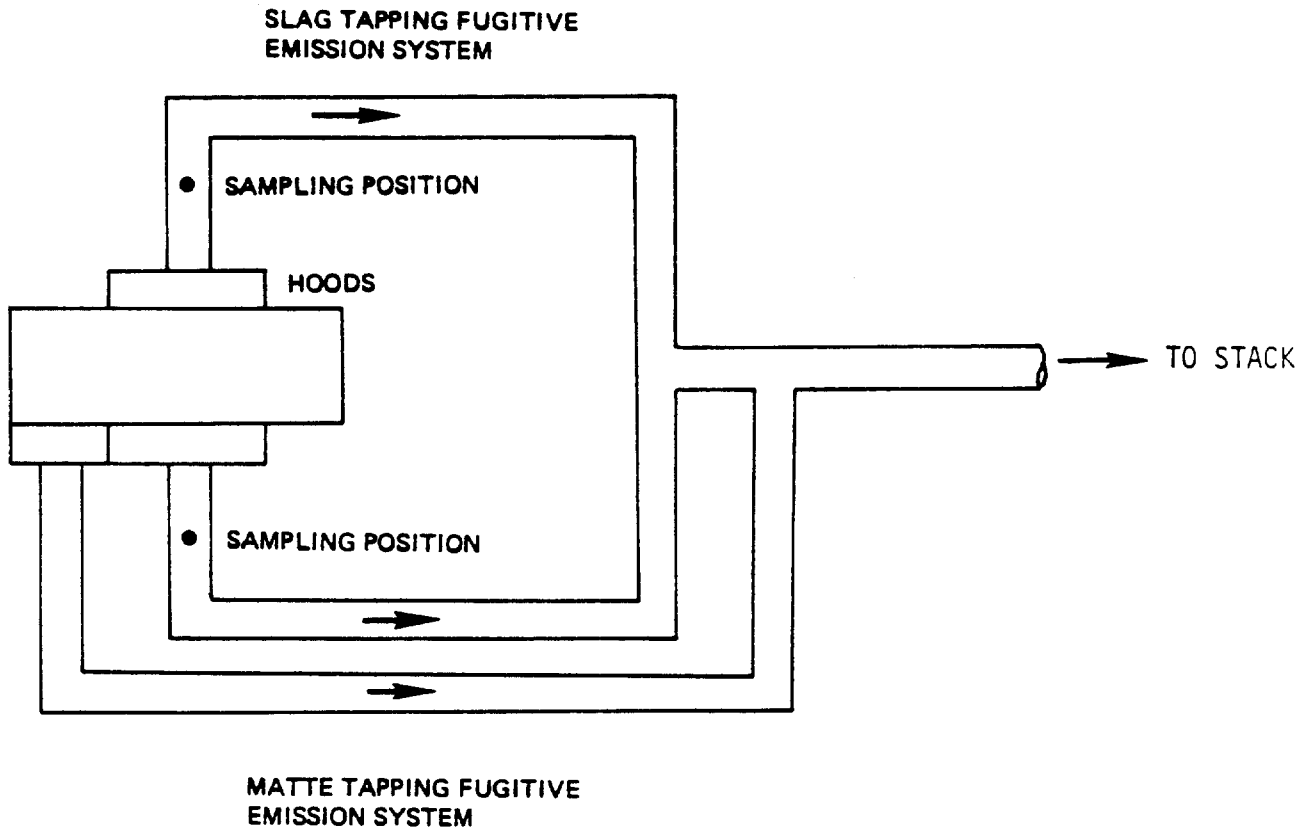

Figure 4. Plant schematic - The matte tapping and slag tapping fugitive emission systems.

TRAVERSE POINT LOCATIONS

TRA-VERSE POINT LOCA-TIONS	FRACTION OF STACK I.D.	DISTANCE FROM INSIDE WALL (IN)
1	.021	1.28
2	.067	4.02
3	.118	7.09
4	.177	10.64
5	.250	15.00
6	.356	21.34
7	.644	38.66
8	.750	45.00
9	.823	49.36
10	.882	52.91
11	.933	55.98
12	.979	58.72

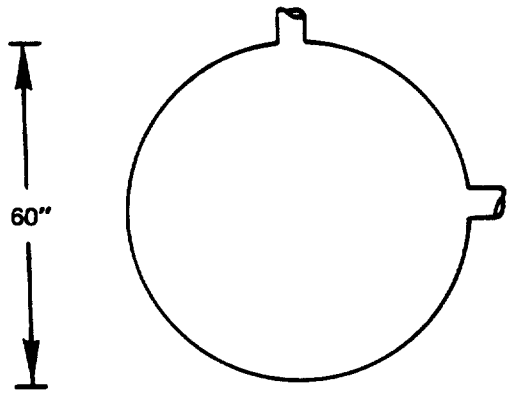

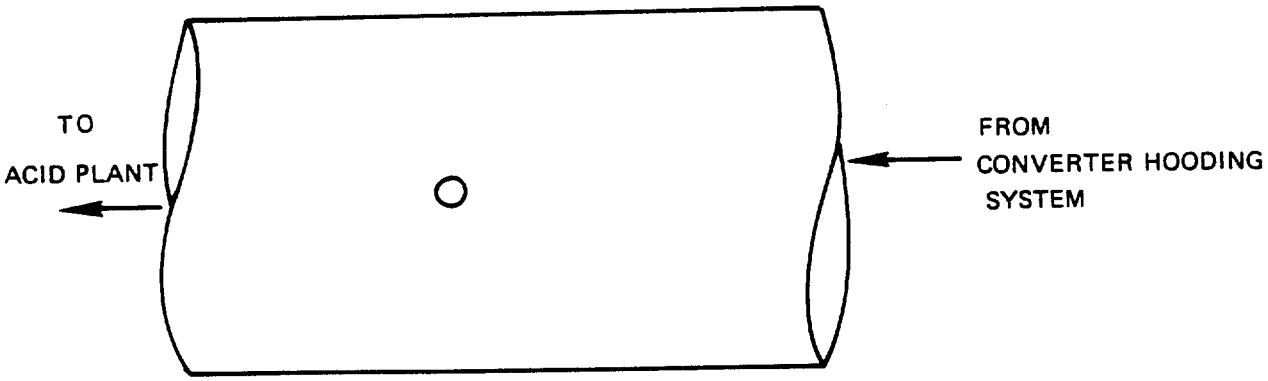

ACID PLANT INLET

Figure 5. Acid plant inlet.

TRAVERSE POINT	FRACTION OF DUCT I.D.	DISTANCE FROM INSIDE WALL (IN)
1	.044	1.66
2	.146	5.56
3	.296	11.24
4	.704	26.76
5	.854	32.44
6	.956	36.34

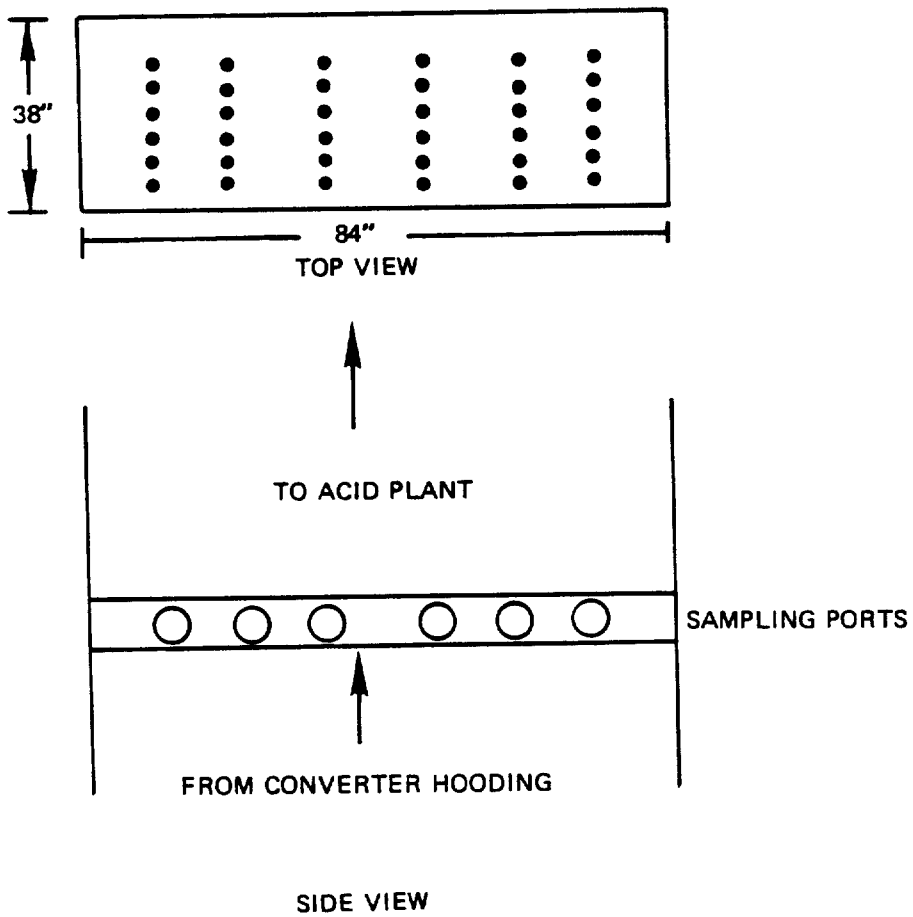

Figure 6. Converter fugitive emission system.

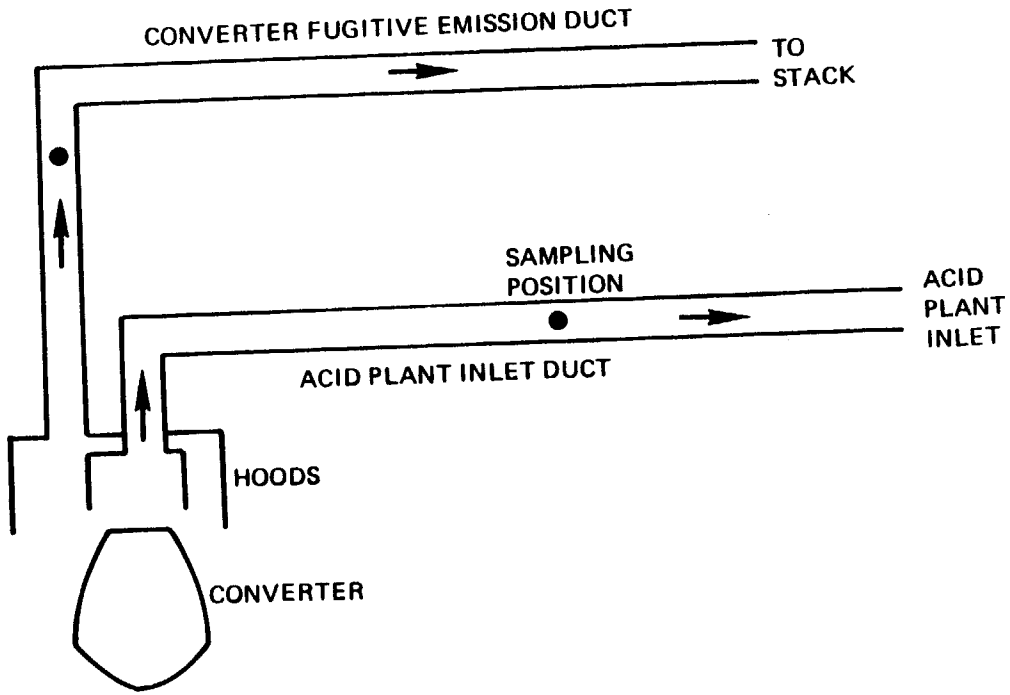

Figure 7. Plant schematic - converter fugitive emission system.

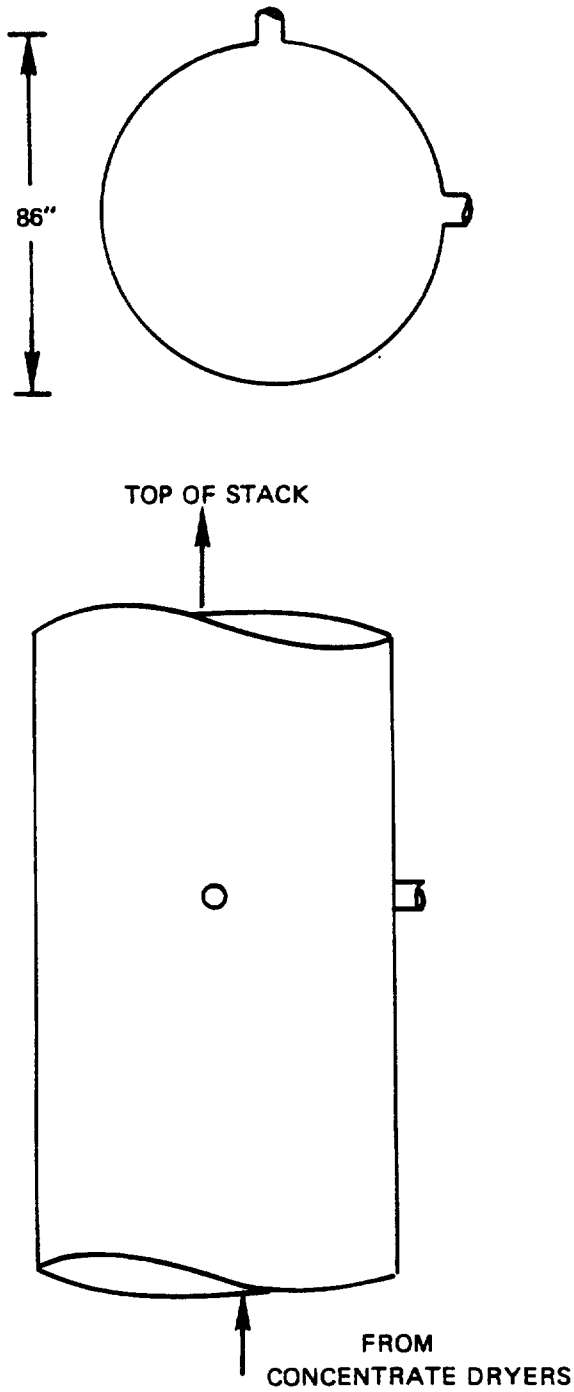

TRAVERSE POINT LOCATIONS

TRA-VERSE POINT LOCA-TIONS	FRACTION OF STACK I.D.	DISTANCE FROM INSIDE WALL (IN)
1	.044	3.75
2	.146	12.59
3	.296	25.45
4	.704	60.55
5	.854	73.41
6	.956	82.25

CONCENTRATE DRYER STACK

Figure 8. Concentrate dryer stack.

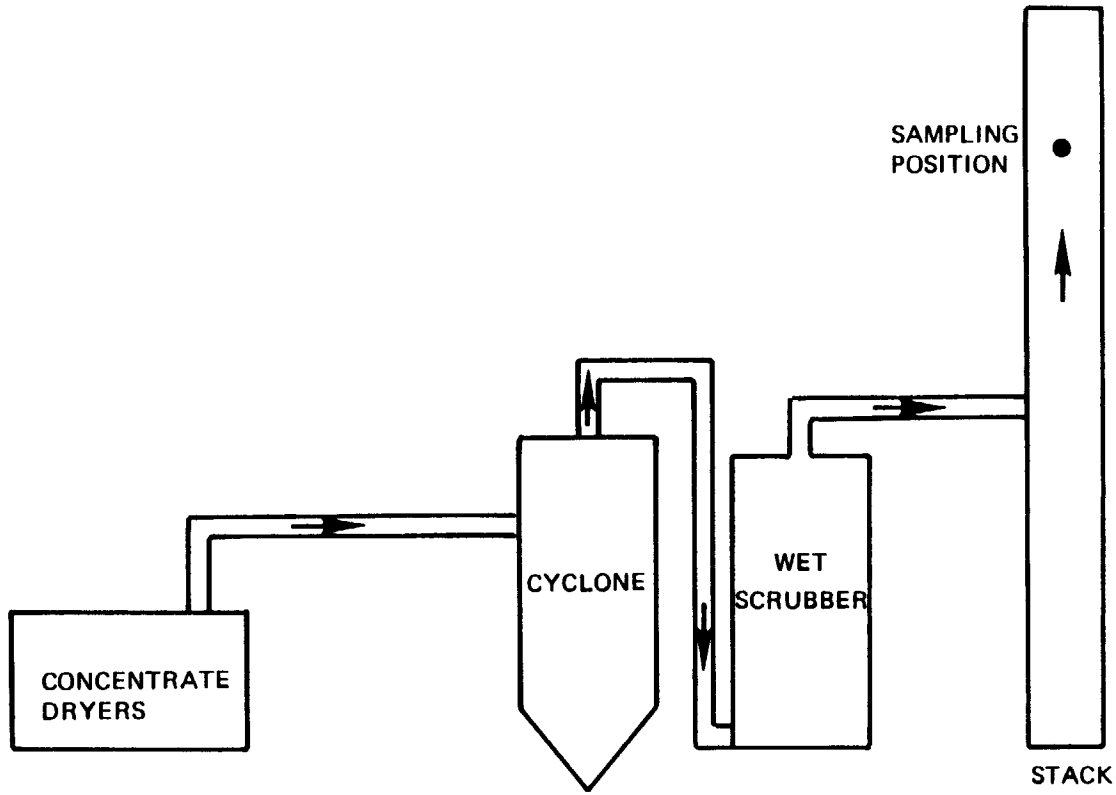

Figure 9. Plant schematic - concentrate dryer fugitive emission system

SECTION 5

SAMPLING AND ANALYTICAL PROCEDURE

A) Arsenic/Sulfur Dioxide Sampling

The sampling train used for arsenic/sulfur dioxide collection consists of an EPA Method 5 train modified by adding two additional impingers in series to the four used in the Method 5 train. The first two impingers contained 150 mls of distilled water each, third, fourth and fifth impingers contained 150 mls of 10% hydrogen peroxide each. The sixth impinger contained 250 grams of silica gel.The Arsenic/sulfur dioxide sampling train schematic is presented in Figure 10.

Before each test a velocity traverse of the stack was done to determine the average stack temperature and velocity pressure. The velocity traverse was done according to EPA Methods 1 and 2. A grab sample of the stack gas was taken and analyzed with a thermal conductivity detector gas chromatograph for CO_2, O_2, N_2, and CO. Before the first test at each location the moisture content of the gas stream was estimated by either condensation in impingers as in EPA Method 4, or by wet and dry bulb thermometer if the stack gas temperature was below 120°F.

The arsenic/sulfur dioxide samples were taken at traverse points at the center of equal areas within the stack. The number of traverse points was determined by the number of duct diameters upstream and downstream from the nearest flow disturbances. The sampling rate was adjusted to isokinetic conditions using a nomograph which had been set based on the preliminary velocity traverse data, and moisture estimate.

The sampling time per traverse point was 3-10 minutes depending upon the sampling location. Leak checks of the sampling train were done at the beginning of each test, just before the sampling port change, and at the end of the test. At the end of each test the sampling train was inspected for cracked or broken glassware, and to assure that the filter remained intact.

Sample Recovery

The sampling nozzle and probe liner were rinsed with 0.1N NaOH and brushed out with a nylon bristle brush with a teflon tubing handle. The remainder of the sampling train was removed to the mobile laboratory. The front half of the filter and connecting glassware were rinsed with 0.1N NaOH and this rinse was added to the nozzle and probe rinse. The filter was removed from the filter holder and placed in a Polyethylene container,

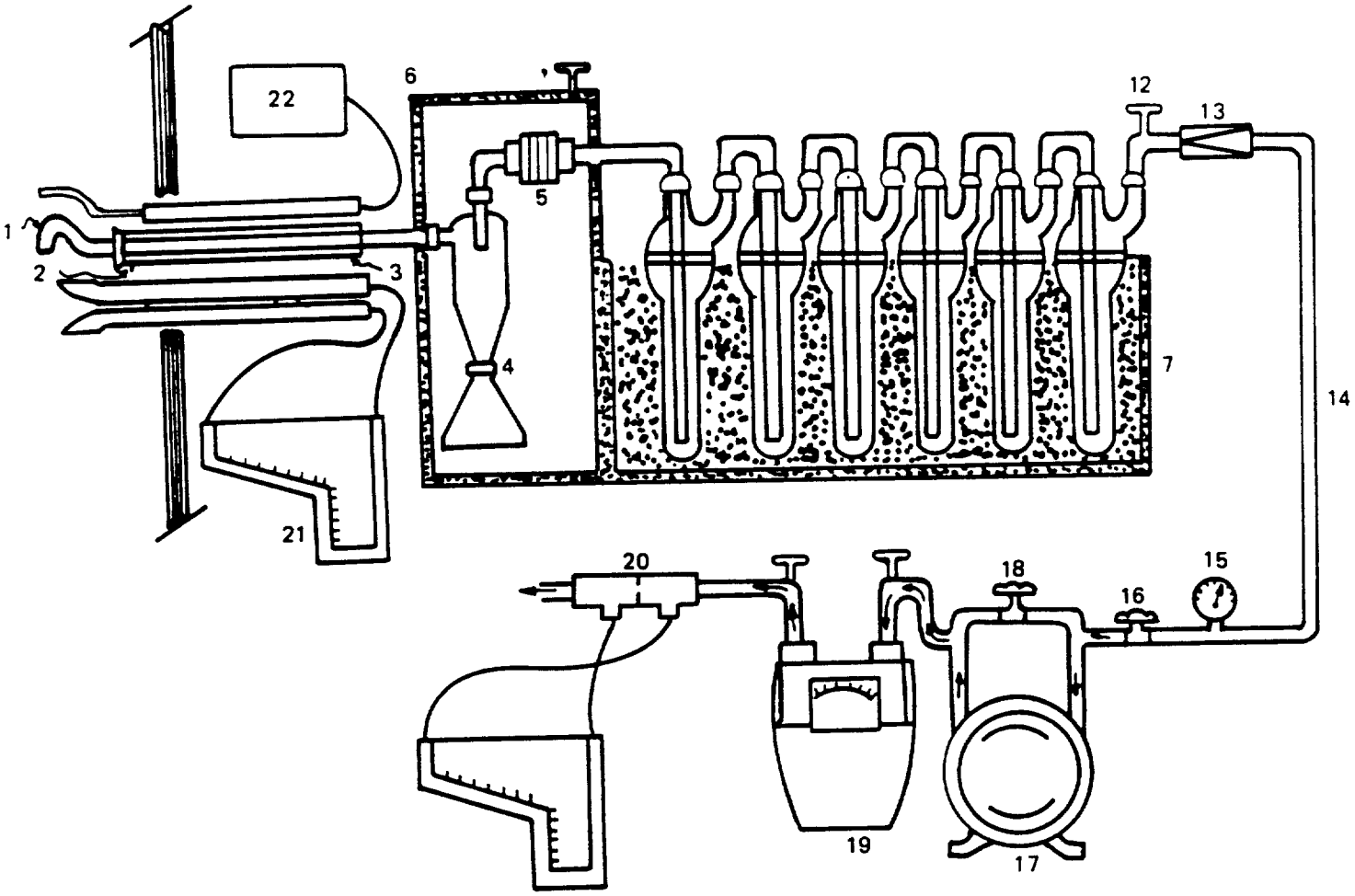

Figure 10. Arsenic sulfur dioxide sampling train.

KEY

1. Calibrated Nozzle
2. Heated Probe
3. Reverse Type Pitot
4. Cyclone Assembly
5. Filter Holder
6. Heated Box
7. Ice Bath with Impingers
12. Thermometer
13. Check Valve
14. Vacuum Line
15. Vacuum Gauge
16. Main Valve
17. Air Tight Pump
18. By-Pass Valve
19. Dry Test Meter
20. Orifice
21. Pitot Manometer
22. Thermometer

Which was labeled and sealed. The first two impinger solutions were measured and placed in a glass sample container along with a 0.1N NaOH rinse of the impingers. The contents of the third, fourth and fifth impingers were measured and placed in a separate glass sample container along with a distilled water rinse of the impingers. The silica gel in the sixth impinger was weighed to the nearest 0.5 gram, and regenerated.

B) Analysis

Sulfur Dioxide Analysis

The samples were analyzed for sulfur dioxide by taking an aliquot of the hydrogen peroxide impinger solutions and titrating with barium perchlorate solution and thorin indicator as described in EPA Method 6 (Determination of Sulfur Dioxide Emissions from Stationary Sources).

Arsenic Analysis

1. Filter- Warm filter and loose particulate matter with 50ml 0.1N NaOH for about 15 minutes. Add 10ml concentrated HNO_3 and bring to boil for 15 minutes. Filter solution through No. 41 Whatman paper and wash with hot water. Evaporate filtrate, cool, redissolve in 5ml of 1:1 HNO_3, transfer to a 40ml volumetric flask and dilute.

2. Probe Wash and Impinger Solutions-These should be combined and a 100ml sample withdrawn. Add 10ml concentrated HNO_3 and evaporate to a few milliliters. Redissolve with 5ml 1:1 HNO_3 and dilute to 50mls. A reagent blank should be carried through the same procedure. The resulting blank solution should be used in the dilution of standards to matrix match samples and standards.

3. All the samples prepared above should be screened by air/acetylene flame. The filter samples may require dilution with 0.8N HNO_3. Impinger solutions containing more than 26 mg/l of arsenic should be diluted since linearity decreases dramatically above that level.

Since an entrained hydrogen flame provides about five times as much sensitivity as the air/acetylene flame, a matrix check of a sample in a hydrogen flame should be carried out by the method of standard additions, and compared with a value obtained from matrix matched standards in a hydrogen flame. If values are comparable ($\pm$5%) the air entrained hydrogen flame may be used.

Due to high concentrations of copper on the filter an air/acetylene flame should always be used to dissociate any AsCu compounds stable in the cooler hydrogen flame.

4. For samples below the 1 mg/l level, hydride generation is necessary. An appropriate aliquot of digested sample in 0.8N HNO_3 containing less than about 10 μg of arsenic is chosen (some screening may be necessary). Five

mls of concentrated H_2SO_4 is added to the sample which is then placed on a hot plate until SO_3 fumes fill the flask. A reduction in volume to about 5ml or less may be necessary. This step removes HNO_3 which causes a violent reaction when the reducing agent is added resulting in poor reproducibility and lowered sensitivity by producing I_2, NO_2 and possible other species.

One ml of 30% KI and 1ml of 30% $SnCl_2$ are added to the sample, the former to act as a catalyst in hydride formation and the latter to reduce all the arsenic to As^{+3}. The sample is then diluted to about 15ml and 15ml of concentrated HCL is added. Powdered Zn (or $NaBH_4$) is then added, the reaction vessel is immediately closed and the nitrogen or argon carrier flow initiated. A peak should be produced within a few seconds.

APPENDIX A

FIELD AND ANALYTICAL DATA

A1. Traverse Point Location

TRAVERSE POINT LOCATION FOR CIRCULAR DUCTS

PLANT Kennecott Copper - Magna, Utah
DATE
SAMPLING LOCATION Slag Tapping & Matte Tapping
INSIDE OF FAR WALL TO
OUTSIDE OF NIPPLE, (DISTANCE A) 62.5
INSIDE OF NEAR WALL TO
OUTSIDE OF NIPPLE, (DISTANCE B) 2.5
STACK I.D., (DISTANCE A - DISTANCE B) 60
NEAREST UPSTREAM DISTURBANCE 10
NEAREST DOWNSTREAM DISTURBANCE 2
CALCULATOR

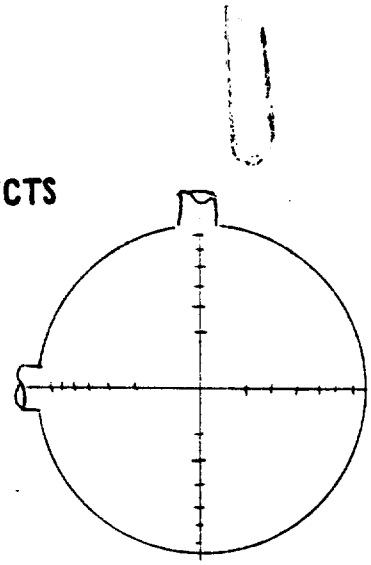

SCHEMATIC OF SAMPLING LOCATION

TRAVERSE POINT NUMBER	FRACTION OF STACK I.D.	STACK I.D.	PRODUCT OF COLUMNS 2 AND 3 (TO NEAREST 1/8 INCH)	DISTANCE B	TRAVERSE POINT LOCATION FROM OUTSIDE OF NIPPLE (SUM OF COLUMNS 4 & 5)
1	2.1	60	1.26	2.5	3.76
2	6.7		4.02		6.52
3	11.8		7.08		9.58
4	17.7		10.62		13.12
5	25.0		15.0		17.5
6	35.6		21.36		23.86
7	64.4		38.64		45.27
8	75.0		45.0		47.5
9	82.3		49.38		51.88
10	88.2		52.92		55.42
11	93.3		55.98		58.48
12	97.9		58.74		61.24
			30		

EPA (Dur) 232
4/72

A2. Field Data Sheets

FIELD DATA

PLANT Kennecott Copper
DATE [illegible] 78
SAMPLING LOCATION Slag Tapping
SAMPLE TYPE Arsenic
RUN NUMBER KC-ST-1
OPERATOR D. Wagner / T. Rooney
AMBIENT TEMPERATURE
BAROMETRIC PRESSURE 25.69
STATIC PRESSURE, (P_s) -.78
FILTER NUMBER (s) 404

PROBE LENGTH AND TYPE 5' SS
NOZZLE I.D. .250
ASSUMED MOISTURE, % 20%
SAMPLE BOX NUMBER 568
METER BOX NUMBER 2315
METER $\Delta H_@$ 1.75
C FACTOR
PROBE HEATER SETTING 100° F
HEATER BOX SETTING 300° F
REFERENCE Δp .52

SCHEMATIC OF TRAVERSE POINT LAYOUT

READ AND RECORD ALL DATA EVERY 2½ MINUTES

TRAVERSE POINT NUMBER	SAMPLING TIME, min	CLOCK TIME (24 hr CLOCK)	GAS METER READING (V_m), ft^3	VELOCITY HEAD (Δp_s), in. H_2O	ORIFICE PRESSURE DIFFERENTIAL (ΔH), in. H_2O DESIRED	ORIFICE PRESSURE DIFFERENTIAL (ΔH), in. H_2O ACTUAL	STACK TEMPERATURE (T_s), °F	DRY GAS METER TEMPERATURE INLET ($T_{m\,in}$), °F	DRY GAS METER TEMPERATURE OUTLET ($T_{m\,out}$), °F	PUMP VACUUM, in. Hg	SAMPLE BOX TEMPERATURE, °F	IMPINGER TEMPERATURE, °F
	0	15:40	273.688									
1	2.5	15:42½	275.8	.48	1.6	1.6	68	60	62	4	250	60
2	5.0	15:45	277.8	.49	1.7	1.7	70	64	62	4	250	60
3	7.5	15:47½	279.4	.50	1.8	1.8	70	70	62	4	250	60
4	10	15:50	281.4	.51	1.85	1.85	70	75	62	4	250	60
5	12.5	15:52½	283.4	.51	1.85	1.85	70	78	64	4	250	60
6	15	15:55	285.4	.53	1.9	1.9	70	82	65	4	250	60
7	17.5	15:57½	287.4	.50	1.8	1.8	70	85	64	4	250	60
8	20	16:00	289.4	.45	1.65	1.65	70	88	65	4	250	60
9	22.5	16:02½	291.3	.45	1.65	1.65	70	90	66	4	250	60
10	25	16:05	293.1	.43	1.55	1.55	71	90	68	4	250	60
11	27.5	16:07½	295.0	.44	1.58	1.58	72	91	68	4	250	60
12	30	16:10	296.9	.44	1.58	1.58	75	92	69	4	250	60
13	32.5	16:12½	298.8	.46	1.67	1.67	72	92	70	4	250	60
14	33.5	16:13½	299.480	.49	1.92	1.92	72	93	70	4	250	60
STOP												
START		1736 ~~Start~~		~~.50~~	~~1.92~~	~~1.92~~	68	62	64	4	250	60
15	36	1738½	301.650	.50	1.92	1.92	68	62	64	4	250	60
16	38½	1741	304.6	.54	2.1	2.1	72	72	68	5	250	60
17	41	1743½	306.9	.54	2.1	2.1	76	78	64	5	250	60
18	43½	1746	309.0	.56	2.3	2.3	76	82	64	5	250	60
19	46	1748½	311.3	.55	2.2	2.2	77	78	64	5	250	60
20	48½	1751	313.5	.55	2.2	2.2	77	90	68	5	250	60
21	51	1753½	315.8	.54	2.1	2.1	77	90	70	5	250	60
22	53½	1756	316.938	.54	2.1	2.1	78	90	70	5	250	60

COMMENTS: PRE TEST LEAK RATE = 0.0 cfm
POST TEST LEAK RATE = 0.0 cfm

EPA-Dun 235

102

TRAVERSE POINT NUMBER	SAMPLING TIME min	CLOCK TIME (24 hr CLOCK)	GAS METER READING (V_m), ft^3	VELOCITY HEAD (Δp_s), in H_2O	ORIFICE PRESSURE DIFFERENTIAL (ΔH), in H_2O DESIRED	ORIFICE PRESSURE DIFFERENTIAL (ΔH), in H_2O ACTUAL	STACK TEMPERATURE (T_s), °F	DRY GAS METER TEMPERATURE INLET ($T_{m\ in}$), °F	DRY GAS METER TEMPERATURE OUTLET ($T_{m\ out}$), °F	PUMP VACUUM, in Hg	SAMPLE BOX TEMPERATURE, °F	IMPINGER TEMPERATURE, °F
			316.938									
23	55	18:00	~~318.9~~ 316.938	.53	1.9	1.9	77	83	70	5	250	60
24	57.5	18:02½	318.9	.54	2.1	2.1	77	88	70	5	250	60
25	60	18:05	321.088	.54	2.1	2.1	77	89	70	5	250	60
	60		47.40	.504	1.89		72.92	74.62				

EPA (Dur) 236
4 72

1 of #2 .45 703

FIELD DATA

PLANT KENNECOTT COPPER
DATE 11-2-78
SAMPLING LOCATION SLAG TAPPING
SAMPLE TYPE ARSENIC
RUN NUMBER KC-ST-2
OPERATOR D Wagner / T Rooney
AMBIENT TEMPERATURE 50°F
BAROMETRIC PRESSURE 25.72
STATIC PRESSURE, (P_s)
FILTER NUMBER (s) 525

PROBE LENGTH AND TYPE 5' SS
NOZZLE I.D. .309
ASSUMED MOISTURE, % 2%
SAMPLE BOX NUMBER 568
METER BOX NUMBER 568
METER $\Delta H_@$ 1.75
C FACTOR
PROBE HEATER SETTING 100°F
HEATER BOX SETTING 300°F
REFERENCE Δp 1 .5

SCHEMATIC OF TRAVERSE POINT LAYOUT .45 → 1.32 4.31

READ AND RECORD ALL DATA EVERY 5 MINUTES

	TRAVERSE POINT NUMBER	SAMPLING TIME, min	CLOCK TIME (24 hr CLOCK)	GAS METER READING (V_m), ft^3	VELOCITY HEAD (Δp_s), in. H_2O	ORIFICE PRESSURE DIFFERENTIAL (ΔH), in. H_2O DESIRED	ACTUAL	STACK TEMPERATURE (T_s), °F	DRY GAS METER TEMPERATURE INLET ($T_{m\,in}$), °F	OUTLET ($T_{m\,out}$), °F	PUMP VACUUM, in. Hg.	SAMPLE BOX TEMPERATURE, °F	IMPINGER TEMPERATURE, °F
		0	10:50	323.242									
	1	5	10:55	327.5	.42	3.9	3.9	68	58	54	8	250	50
	2	10	11:00	333.3	.44	4.2	4.2	71	58	55	9	250	50
	3	15	11:05	339.3	.44	4.2	4.2	71	79	57	9	250	48
STOP	4	17	11:07	341.968	.45	4.2	4.2	71	84	59	9	250	60
~~START~~	4	17	11:45	—	—	—	—	—	—	—	—	—	—
START	4	20	11:48	345.4	.45	4.2	4.2	72	64	60	9	250	48
34	5	25	11:53	351.3	.45	4.2	4.2	72	64	60	9	250	48
	6	30	11:58	357.3	.45	4.2	4.2	72	80	60	9	250	60
	7	35	12:03	363.3	.45	4.2	4.2	75	88	62	9	250	67
STOP	7	36	12:04	364.105	.45	4.2	4.2	75	89	62	9	250	67
START	7	36	12:40	—	—	—	—	—	—	—	—	—	—
	8	40	12:44	368.3	.45	4.2	4.2	82	68	62	9	250	52
	9	45	12:49	374.3	.45	4.2	4.2	82	74	62	9	250	56
STOP	9	49	12:53	378.936	.42	3.9	3.9	94	89	64	8	250	66
START	9	49	15:00	380.1	—	—	—	—	—	—	—	—	—
	9	50	15:01	380.1	.45	4.2	4.2	100	62	54	8	250	48
	10	55	15:06	385.7	.41	3.8	3.8	105	62	56	8	250	50
STOP	10	57	15:08	388.097	.41	3.8	3.8	100	74	58	8	250	54
START	10	57	15:40	—	—	—	—	—	—	—	—	—	—
	11	60	15:43	391.5	.42	3.9	3.9	92	58	55	8	250	48
	12	65	15:48	397.3	.42	3.9	3.9	98	67	56	8	250	44
	13	70	15:53	403.3	.48	4.5	4.5	103	81	58	10	250	52
STOP	13	72	15:55	405.739	.48	4.5	4.5	99	88	59	10	250	55

COMMENTS: PRE TEST LEAK RATE = 0.0 cfm. @ 6W
POST TEST LEAK RATE = .01 cfm. @ 6W

EPA (Dec) 235

2 of 2

	TRAVERSE POINT NUMBER	SAMPLING TIME min	CLOCK TIME (24 hr CLOCK)	GAS METER READING (V_m), ft^3	VELOCITY HEAD (Δp_s), in H_2O	ORIFICE PRESSURE DIFFERENTIAL (ΔH), in H_2O DESIRED	ORIFICE PRESSURE DIFFERENTIAL (ΔH), in H_2O ACTUAL	STACK TEMPERATURE (T_s), °F	DRY GAS METER TEMPERATURE INLET ($T_{m\,in}$), °F	DRY GAS METER TEMPERATURE OUTLET ($T_{m\,out}$), °F	PUMP VACUUM, in Hg	SAMPLE BOX TEMPERATURE, °F	IMPINGER TEMPERATURE, °F
		72	15.55	405.739									
START	13	72	~~16:30~~										
	14	75	16:33 ~~16:38~~	409.1	~~5.2~~ .52	4.9	4.9	108	62	58	11	250	48
	15	80	16:38	415.3	~~5.2~~ .52	4.9	4.9	108	70	58	11	250	48
STOP	16	84	16:42	420.271	~~5.0~~ .5	4.68	4.68	109	86	60	11	250	54
START	16	85	16:48	421.5									
	17	90	16:53	~~421.5~~ 426.3	.50	4.68	4.68	108	78	60	11	250	52
	18	95	16:58	432.7	.50	4.68	4.68	106	86	62	11	250	52
	19	100	17:03	439.1	.53	4.9	4.9	104	98	64	11	250	56
STOP	19	103	17:06	443.765	.53	4.9	4.9	104	100	66	11	250	56
START	19	105	18:08	446.6	.548	4.6	4.6	91	62	60	10	250	48
	20	110	18:13	450.6	.48	4.6	4.6	91	62	60	10	250	52
	21	115	18:18	455.7	.47	4.4	4.4	99	80	60	10	250	56
	22	120	18:23	461.561	.46	4.3	4.3	101	88	62	9.5	250	58
		120		138.32	.46	4.33		91.83	67.37				

35

EPA 1001 236
4 72

FIELD DATA

PLANT KENNECOTT
DATE 11-3-78
SAMPLING LOCATION SLAG TAPPING
SAMPLE TYPE ARSENIC
RUN NUMBER RC-ST-3
OPERATOR Rooney / Wagner
AMBIENT TEMPERATURE
BAROMETRIC PRESSURE 25.84
STATIC PRESSURE, (P_s)
FILTER NUMBER (s) #527

PROBE LENGTH AND TYPE 5' SS
NOZZLE I.D. .309
ASSUMED MOISTURE, % 2%
SAMPLE BOX NUMBER 568
METER BOX NUMBER 568
METER $\Delta H_@$ 1.75
C FACTOR 1.0
PROBE HEATER SETTING 100°F
HEATER BOX SETTING 250°F
REFERENCE Δp .19

SCHEMATIC OF TRAVERSE POINT LAYOUT

READ AND RECORD ALL DATA EVERY 5 MINUTES

	TRAVERSE POINT NUMBER	SAMPLING TIME, min	CLOCK TIME (24 hr CLOCK)	GAS METER READING (V_m), ft^3	VELOCITY HEAD (Δp_s), in. H_2O	ORIFICE PRESSURE DIFFERENTIAL (ΔH), in. H_2O DESIRED	ACTUAL	STACK TEMPERATURE (T_s), °F	DRY GAS METER TEMPERATURE INLET ($T_{m\,in}$), °F	OUTLET ($T_{m\,out}$), °F	PUMP VACUUM, in. Hg	SAMPLE BOX TEMPERATURE, °F	IMPINGER TEMPERATURE, °F
		0	10:15	462.348									
	1	5	10:20	467.9	.40	3.95	3.95	96	62	62	7.5	250	49
	2	10	10:25	473.7	.41	4.1	4.1	95	76	62	8	250	49
	3	15	10:30	479.6	.43	4.2	4.2	84	86	65	8	250	59
	4	20	10:35	485.6	.43	4.2	4.2	88	92	67	8	250	66
STOP	4	24	10:39	490.047	.43	4.2	4.2	80	96	70	8	250	68
START	4	24	12:47	490.047	—	—	—	—	—	—	—	—	—
	5	25	12:48	491.2	.39	3.85	3.85	68	63	60	7	250	58
	6	30	12:53	497.0	.39	3.85	3.85	69	64	61	7	250	60
	7	35	12:58	502.6	.38	3.75	3.75	62	77	62	7	250	59
	8	40	13:03	508.2	.38	3.75	3.75	57	86	64	7	250	64
	9	45	13:08	513.6	.33	3.25	3.25	63	91	66	6.5	250	64
STOP	10	50	13:13	517.867	.32	3.15	3.15	57	96	70	6.5	250	62
START	10	50	13:44	517.867	—	—	—	—	—	—	—	—	—
	11	55	13:49	524.3	.35	3.5	3.5	53	74	71	7	250	58
	12	60	13:54	529.4	.28	2.7	2.7	58	89	72	6	250	58
	13	65	13:59	535.5	.38	3.6	3.6	65	96	74	7	250	60
STOP	14	70	14:04	540.690	.38	3.6	3.6	64	99	75	7	250	60
START	14	70	15:48	540.690	—	—	—	—	—	—	—	—	—
	15	75	15:53	547.0	.47	4.6	4.6	67	66	62	10	250	51
	16	80	15:58	553.2	.45	4.45	4.45	66	84	64	9	250	58
	17	85	16:03	559.4	.45	4.45	4.45	70	94	66	9	250	59
	18	90	16:08	565.5	.45	4.45	4.45	72	102	69	9	250	60
STOP	18	93	16:11	569.375	.46	4.55	4.55	74	105	72	9	250	60

COMMENTS: PRE TEST LEAK RATE = .01 cfm, DW
POST TEST LEAK RATE = .02 cfm, DW

EPA-Durh 235

	TRAVERSE POINT NUMBER	SAMPLING TIME min	CLOCK TIME (24 hr CLOCK)	GAS METER READING (V_m), ft^3	VELOCITY HEAD (Δp_s), in H_2O	ORIFICE PRESSURE DIFFERENTIAL (ΔH), in H_2O DESIRED	ORIFICE PRESSURE DIFFERENTIAL (ΔH), in H_2O ACTUAL	STACK TEMPERATURE (T_s), °F	DRY GAS METER TEMPERATURE INLET ($T_{m\,in}$), °F	DRY GAS METER TEMPERATURE OUTLET ($T_{m\,out}$), °F	PUMP VACUUM, in Hg	SAMPLE BOX TEMPERATURE, °F	IMPINGER TEMPERATURE, °F
	18	93	17.37	569.375									
	19	95	17:39	571.1	.46	4.55	4.55	67	68	62	9	250	52
	20	100	17:44	577.1	.46	4.55	4.55	67	68	62	9	250	52
	21	105	17:49	583.2	.45	4.45	4.45	72	66	64	9	250	53
	22	110	17:54	589.3	.42	4.3	4.3	73	95	66	9	250	60
STOP	22	111	17:55	590.943	.43	4.35	4.35	77	100	68	9	250	60
START	22	111	18:01	590.943									
	23	115	18:05	597.1	.45	4.45	4.45	79	90	70	9	250	58
	24	120	18:10	601.732	.44	4.4	4.4	79	99	71	9	250	59
		120		139.384	.408	4.03		71.35	75.98				

EPA (Out) 236
4 72

100.

FIELD DATA

MT 1

PLANT Salt Lake – Kennecott
DATE 11/3/78
SAMPLING LOCATION matte Tapping
SAMPLE TYPE As
RUN NUMBER MT-1
OPERATOR
AMBIENT TEMPERATURE 65
BAROMETRIC PRESSURE 25.~~88~~
STATIC PRESSURE, (P_s) -18
FILTER NUMBER (s) 528

PROBE LENGTH AND TYPE 6'
NOZZLE I.D. 0.25
ASSUMED MOISTURE, % 3.20
SAMPLE BOX NUMBER
METER BOX NUMBER
METER $\Delta H_@$ 1.68
C FACTOR
PROBE HEATER SETTING
HEATER BOX SETTING
REFERENCE Δp 0.45

SCHEMATIC OF TRAVERSE POINT LAYOUT

READ AND RECORD ALL DATA EVERY 3 MINUTES

TRAVERSE POINT NUMBER	CLOCK TIME (24 hr CLOCK) / SAMPLING TIME, min	GAS METER READING (V_m), ft³	VELOCITY HEAD (Δp_s), in. H_2O	ORIFICE PRESSURE DIFFERENTIAL (ΔH), in. H_2O DESIRED	ORIFICE PRESSURE DIFFERENTIAL (ΔH), in. H_2O ACTUAL	STACK TEMPERATURE (T_s), °F	DRY GAS METER TEMPERATURE INLET ($T_{m\,in}$), °F	DRY GAS METER TEMPERATURE OUTLET ($T_{m\,out}$), °F	PUMP VACUUM, in. Hg	SAMPLE BOX TEMPERATURE, °F	IMPINGER TEMPERATURE, °F
	0	683.495									
1	10:04 0	687.4	0.85	3.7	3.7	108	60	60	6.2	250	60
2	10:07 3	690.2	.80	3.5	3.5	111	70	64	6.0	250	60
3	10:10 6	693.4	.80	3.5	3.5	131	62	80	6.0	250	60
4	10:13 9	stop	~~.43~~	~~1.85~~	~~1.85~~						
4	11:05	696.4	.43	1.85	1.85	105	68	66	3.5	250	60
5	11:08 12	698.7	.62	2.7	2.7	174	72	68	4.5	250	60
6	11:11 15	stop									
6	11:15 1/2	701.8	.65	2.9	2.9	96	78	70	5.0	250	60
7	11:18 1/2 18	~~701.8~~ 705.2	.65	2.9	2.9	101	83	68	5.0	250	60
8	11:21 1/2 21	707.9	.7	3.1	3.1	99	90	68	5.0	250	60
9	11:24 1/2 24	710.8	.7	3.1	3.1	113	94	70	5.0	250	60
10	11:27 1/2 27	713.9	.68	3.0	3.0	122	98	72	5.0	250	60
11	11:30 1/2 30	717.1	.68	3.0	3.0	129	99	74	5.0	250	60
12	11:33 1/2 33	720.4	.7	3.1	3.1	141	100	75	5.0	250	60
	11:36 1/2 36	Stop									
1	12:31	724.0	.87	3.9	3.9	138	75	72	6.2	250	60
2	12:34 39	727.3	.73	3.2	3.2	141	85	72	5.0	250	60
3	12:37 42	731.3	.8	3.5	3.5	135	85	72	5.5	250	60
4	12:41 46	734.4	.83	3.7	3.7	147	90	70	6.0	250	60
5	12:44 49	733.5	.87	3.9	3.9	128	92	72	6.2	250	60
6	2:04 1/2	742.1	.85	3.7	3.7	123	70	70	6.0	250	60
7	2:07 1/2 52	745.3	.75	3.3	3.3	129	75	70	5.2	250	60
8	2:10 1/2 55		.68	3.0	3.0	141	82	70	5.0	250	60

COMMENTS:

EPA (Dun) 235

TRAVERSE POINT NUMBER	SAMPLING TIME min / CLOCK TIME (24 hr CLOCK)	GAS METER READING (V_m), ft^3	VELOCITY HEAD (Δp_s), in H_2O	ORIFICE PRESSURE DIFFERENTIAL (ΔH), in H_2O DESIRED	ORIFICE PRESSURE DIFFERENTIAL (ΔH), in H_2O ACTUAL	STACK TEMPERATURE (T_s), °F	DRY GAS METER TEMPERATURE INLET ($T_{m\ in}$), °F	DRY GAS METER TEMPERATURE OUTLET ($T_{m\ out}$), °F	PUMP VACUUM, in Hg	SAMPLE BOX TEMPERATURE, °F	IMPINGER TEMPERATURE, °F
	2:13½ 58	748.0									
9	2:14 58½	748.95	.68	3.0	3.0	141	82	70	5.0	250	60
9	2:38	750.9	.68	3.0	3.0	117	70	70	5.0	250	60
10	2:40 60½	753.6	.7	3.1	3.1	120	78	70	4.9	250	60
11	2:43 63½	756.0	.68	3.0	3.0	124	85	70	5.0	250	60
12	2:46 66½	760.177	.68	5.0	3.0	124	86	75	5.0	250	60
	2:49 69½	stop									
	69.5	76.68	.72	3.19		126.32	75.74				

EPA (Dec) 236
4 72

700

FIELD DATA

PLANT Kennecott Copper
DATE 11/1/78
SAMPLING LOCATION Matte Tapping (SOUTH)
SAMPLE TYPE Arsenic
RUN NUMBER KC-MT-2
OPERATOR Kelly
AMBIENT TEMPERATURE
BAROMETRIC PRESSURE 25.72
STATIC PRESSURE, (P_s)
FILTER NUMBER (s) 702

PROBE LENGTH AND TYPE 5' SS
NOZZLE I.D. .250
ASSUMED MOISTURE, % 5%
SAMPLE BOX NUMBER
METER BOX NUMBER
METER ΔH@
C FACTOR
PROBE HEATER SETTING
HEATER BOX SETTING
REFERENCE Δp .76

SCHEMATIC OF TRAVERSE POINT LAYOUT

READ AND RECORD ALL DATA EVERY 2½ MINUTES

	TRAVERSE POINT NUMBER	SAMPLING TIME, min / CLOCK TIME (24 hr CLOCK)	GAS METER READING (V_m), ft^3	VELOCITY HEAD (Δp_s), in. H_2O	ORIFICE PRESSURE DIFFERENTIAL (ΔH), in. H_2O DESIRED	ACTUAL	STACK TEMPERATURE (T_s), °F	DRY GAS METER TEMPERATURE INLET ($T_{m\,in}$), °F	OUTLET ($T_{m\,out}$), °F	PUMP VACUUM, in. Hg	SAMPLE BOX TEMPERATURE, °F	IMPINGER TEMPERATURE, °F
		0 / 1517	459.668									
11/1/78	1	~~35~~ 1518	460.400	.58	2.2	2.2	83	75	78	5	250	70
	1	0 ~~15~~ 1832		[illegible]	2.35	2.35	83	70	70	5	250	60
	2	3 ~~17~~ 1834	463.20	.6	2.3	2.3	83	70	70	5	250	60
	2	5.5 ~~19.5~~ 1836.5	465	.66	2.5	2.5	83	70	70	5	250	60
	~~3~~	off ~~25~~ 1833.5	~~05~~ 465.54									
	~~4~~	7.5 1857	465.54	~~.52~~	~~2.15~~	~~2.15~~						
	5	~~24~~ 1859.5	467.56	.52	2.15	2.15	109			4	250	60
	6	12.5 1902	469.35	.52	2.15	2.15	110			4	250	60
	7	15 1904.5	471.37	.6	2.3	2.3	111	68	80	5	250	60
	8	16.5 1906	473.1	.96	3.7	3.7	112	88	70	7	250	60
	~~7~~			.96	3.7	3.7	99	88	70	7	250	60
		stop 1908.5	475.545	~~1.05~~	~~4.6~~							
11/2/78	8	10:16 ½	476.9	1.05	4.6	4.6	121	65	65	9	250	60
	9	10:17 19.5	479.4	.88	3.9	3.9	121	~~80~~	65	8	250	60
	10	10:19 ½ 23	481.6	.84	3.7	3.7	129	~~82~~	~~86~~	7	250	60
	11	10:22 24.5		.8	3.6	3.6	122	70	52	7	250	60
	12	10:24½ 27 Stop		.48	2.1							
2nd Traverse	1	12:05	488.2	.48	2.1	2.1	128	92	78	4	260	60
	2	12:07 ½ 29.5	489.1	.5	2.2	2.2	118	95	80	4	250	60
	3	12:10 32	491.052	.55	2.4	2.4	92	95	80	2	250	50
	3	12:11 Stop 33	491.4	~~.35~~	~~1.5~~	~~1.5~~	~~127~~	~~70~~	~~80~~	~~2~~	~~250~~	~~50~~
		12:30	493.2	.35	1.5	1.5	127	70	80	2	250	50

40

COMMENTS:

EPA-Dust 235

TRAVERSE POINT NUMBER	SAMPLING TIME, min / CLOCK TIME (24 hr CLOCK)	GAS METER READING (V_m), ft^3	VELOCITY HEAD (Δp_s), in H_2O	ORIFICE PRESSURE DIFFERENTIAL (ΔH), in H_2O DESIRED	ORIFICE PRESSURE DIFFERENTIAL (ΔH), in H_2O ACTUAL	STACK TEMPERATURE (T_s), °F	DRY GAS METER TEMPERATURE INLET ($T_{m\,in}$), °F	DRY GAS METER TEMPERATURE OUTLET ($T_{m\,out}$), °F	PUMP VACUUM, in Hg	SAMPLE BOX TEMPERATURE, °F	IMPINGER TEMPERATURE, °F
	12:33 36	493.2									
4	12:34 37	493.9	.35	1.5	1.5	137	70	82	2	250	50
5	12:36 1/2 39.5	495.9	.5	2.2	2.2	133	78	85	3.5	250	50
	12:37 1/2 40.5	496.6	.57	2.5	2.5	110	79	85	4.5	250	50
5	4:35 1/2	499.9	.83	3.7	3.7	118	62	60	8.0	250	50
6	4:38 43	502.1	.83	3.7	3.7	145	63	61	8.0	250	50
7	4:40 1/2 45.5	505.1	.83	3.7	3.7	131	71	61	8.0	250	50
8	4:43 48	stop									
9	4:58		.83	3.7	3.7	121	68	60	8.0	250	50
10	5:00 1/2 55.5	508.0	.8	3.5	3.5	133	74	60	7.5	250	50
11	5:03 53	511.3	.83	3.7	3.7	125	80	60	8.0	250	50
12	5:05 1/2 55.5	stop				~~104~~					
12	6:22 1/2		.91	4.0	4.0	101	65	60	8.0	250	50
	6:24 58	stop	~~.75~~	~~3.3~~							
1st Traverse 12	6:36	516.0	.75	3.3	3.3	120	65	60	6.5	250	50
	6:38 1/2 60.5	518.537									
	60.5	58.869	.69	2.93		110.62	71.94				

leak check <0.02 cfm @ 8 in Hg.

EPA (Dun) 236
2

705

FIELD DATA

PLANT Salt Lake Kennecott
DATE 11/3/78
SAMPLING LOCATION Matte Tapping
SAMPLE TYPE A2
RUN NUMBER MT-3
OPERATOR [illegible]
AMBIENT TEMPERATURE 65
BAROMETRIC PRESSURE 25.84
STATIC PRESSURE, (P_s)
FILTER NUMBER (s) 526

PROBE LENGTH AND TYPE
NOZZLE I.D. 0.25
ASSUMED MOISTURE, %
SAMPLE BOX NUMBER
METER BOX NUMBER
METER $\Delta H_@$
C FACTOR
PROBE HEATER SETTING
HEATER BOX SETTING
REFERENCE Δp 0.45

SCHEMATIC OF TRAVERSE POINT LAYOUT

READ AND RECORD ALL DATA EVERY 3 MINUTES

TRAVERSE POINT NUMBER	SAMPLING TIME, min	CLOCK TIME (24 hr CLOCK)	GAS METER READING (V_m), ft^3	VELOCITY HEAD (Δp_s), in. H_2O	ORIFICE PRESSURE DIFFERENTIAL (ΔH), in. H_2O DESIRED	ORIFICE PRESSURE DIFFERENTIAL (ΔH), in. H_2O ACTUAL	STACK TEMPERATURE (T_s), °F	DRY GAS METER TEMPERATURE INLET ($T_{m\ in}$), °F	DRY GAS METER TEMPERATURE OUTLET ($T_{m\ out}$), °F	PUMP VACUUM, in. Hg	SAMPLE BOX TEMPERATURE, °F	IMPINGER TEMPERATURE, °F
	0	1004	527.72									
~~2~~ 1	3	1007	528.35	.09	.38	.38	114	60	60	0	250	60
2	6	1010	529.78	.1	.42	.42	118	70	64	0	250	60
3	9	1013	532.00	.49	2.1	2.1	121	64	80	6	250	60
~~4~~	stop	1013.5	532.265									
3	9.5	1006.5	532.265									
4	10	11:07	533.38	.53	2.3	2.3	127	70	70	5	250	60
5	13	11:10	535.81	.53	2.3	2.3	127	70	70	7	250	60
~~6~~	~~DS~~ stop	11:11	536.795	.48	2.0	2.0	108	75	70	6	250	60
5	14	11:16	536.795	~~.42~~	~~1.9~~	~~1.9~~				~~4~~	~~250~~	~~60~~
6	16	11:18	537.915	.42	1.9	1.9	101	78	70	4	250	60
7	19	11:21	540.235	.45	1.9	1.9	101	78	70	5	250	60
8	22	11:24	543.19	.73	3.2	3.2	99	83	70	11	250	60
9	25	11:27	546.26	.69	3.0	3.0	110	96	70	10	250	60
10	28	11:30	549.235	.64	2.8	2.8	122	96	72	9	250	60
11	31	11:33	552.18	.65	2.85	2.85	128	100	74	9	250	60
	stop		555.195	.64	2.8	2.8	139	101	77	9	250	60
								~~104~~	~~78~~			

2 min more

42

COMMENTS:

EPA (Dun 235

705

TRAVERSE POINT NUMBER	SAMPLING TIME min	CLOCK TIME (24 hr CLOCK)	GAS METER READING (V_m), ft^3	VELOCITY HEAD (Δp_s), in. H_2O	ORIFICE PRESSURE DIFFERENTIAL (ΔH), in H_2O DESIRED	ORIFICE PRESSURE DIFFERENTIAL (ΔH), in H_2O ACTUAL	STACK TEMPERATURE (T_s), °F	DRY GAS METER TEMPERATURE INLET ($T_{m\,in}$), °F	DRY GAS METER TEMPERATURE OUTLET ($T_{m\,out}$), °F	PUMP VACUUM, in Hg	SAMPLE BOX TEMPERATURE, °F	IMPINGER TEMPERATURE, °F
	0	12:32	555.41									
1	3	12:35	558.05	.38	1.6	1.6	138	89	80	5	250	60
2	6	12:38	560.62	.54	2.3	2.3	136			6	250	60
3	9	12:41	563.42	.61	2.6	2.6	141	96	82	7	250	60
4	12	12:44	566.22	.58	2.5	2.5	147	100	80	7	250	60
stop:4	14.5	12:46.5	568.485	.55	2.4	2.4	128	100	82	7	250	60
5	14.5	14:05	568.485	~~.56~~	~~2.4~~	~~2.4~~	~~124~~			~~7~~	~~250~~	
6	17.5	14:08	570.90	.56	2.4	2.4	121	71	69	7	250	60
7	20.5	14:11	573.385	.45	1.9	1.9	130			5	250	60
~~stop~~ 8	23.5	14:14	~~576.6~~ 576.6	.56	2.4	2.4	131	80	69	7	250	60
stop 8	24.5	14:15	576.86	~~.76~~	~~3.3~~							
8	24.5	14:39	576.86									
9	26.5	14:41	578.435	.78	3.4	3.4	120	76	70	12	250	60
10	29.5	14:44	581.595	.78	3.4	3.4	120	78	70	13	250	60
11	32.5	14:47	584.8	.81	3.6	3.6	124			14	250	60
12	35.5	14:50	588.05	.73	3.2	3.2	105			13	250	60
stop			591.~~48~~ 0	.73	3.2	3.2	140			13	250	60
	60.5		63.545	~~.5~~ .558	2.42		119.08	77.10				

EPA (Dun) 236
4 72

707 . 100.50

FIELD DATA

PLANT Kennecott Copper
DATE 11-6-78 - 11-7-78
SAMPLING LOCATION Converter Duct (Copper Blow)
SAMPLE TYPE Arsenic
RUN NUMBER ~~RE C A 1~~ LC-CD-1
OPERATOR ROONEY, WAGNER / DeYiLO
AMBIENT TEMPERATURE 80
BAROMETRIC PRESSURE 25.89
STATIC PRESSURE, (P_s) -5.1 " H_2O
FILTER NUMBER (s) 531

PROBE LENGTH AND TYPE 3' SS
NOZZLE I.D. 3/16
ASSUMED MOISTURE, % 4%
SAMPLE BOX NUMBER
METER BOX NUMBER 2235
METER $\Delta H_@$ 1.86
C FACTOR
PROBE HEATER SETTING 250
HEATER BOX SETTING 250
REFERENCE Δp 1.4

SCHEMATIC OF TRAVERSE POINT LAYOUT

READ AND RECORD ALL DATA EVERY 2½ MINUTES

	TRAVERSE POINT NUMBER	SAMPLING TIME, min	CLOCK TIME (24 hr CLOCK)	GAS METER READING (V_m), ft^3	VELOCITY HEAD (Δp_s), in. H_2O	ORIFICE PRESSURE DIFFERENTIAL (ΔH), in. H_2O DESIRED	ORIFICE PRESSURE DIFFERENTIAL (ΔH), in. H_2O ACTUAL	STACK TEMPERATURE (T_s), °F	DRY GAS METER TEMPERATURE INLET ($T_{m\,in}$), °F	DRY GAS METER TEMPERATURE OUTLET ($T_{m\,out}$), °F	PUMP VACUUM, in. Hg	SAMPLE BOX TEMPERATURE, °F	IMPINGER TEMPERATURE, °F
		0	1445	768.505									
	1	2.5	1447½	770.80	1.5	1.86	1.86	110	56	52	4.0	250	50
	2	5.0	1450	773.30	1.8	2.5	2.5	95	62	54	4.0	250	50
	3	7.5	1452½	775.40	1.9	2.6	2.6	98	68	56	6.0	250	50
#1	4	10.0	1455	777.60	1.9	2.6	2.6	98	72	76	6.0	250	50
	5	12.5	1457½	780.70	2.4	3.3	3.3	98	80	58	6.0	250	50
	6	15.0	1500	784.00	2.4	3.3	3.3	98	86	58	6.0	250	50
	7	17.5	1502½	785.50	.45	.62	.62	98	88	60	6.0	250	50
	8	20.0	1505	787.30	1.5	1.86	1.86	95	88	62	6.0	250	50
	9	22½	1507½	789.70	2.1	2.8	2.8	90	90	62	6.0	250	50
44	10	25	1510	792.20	2.1	2.8	2.8	89	94	64	7.0	250	50
#2	11	27½	1512½	795.10	2.1	2.8	2.8	88	96	66	7.0	250	50
	12	30.0	1515	797.40	2.2	3.0	3.0	98	99	68	8.0	250	50
	1	32½	1517½	800.20	1.4	1.86	1.86	99	100	68	5.0	250	50
	2	35	1520	803.10	2.8	3.8	3.8	97	102	68	5.0	250	50
	3	37½	1522½	805.20	3.0	3.8	3.8	99	102	68	5.0	250	50
	4	40	1525	808.00	3.0	3.8	3.8	99	102	68	5.0	250	50
#3	5	42½	1527½	811.40	3.0	3.8	3.8	99	102	72	6.0	250	50
	6	45	1530	814.30	3.0	3.8	3.8	106	106	78	6.0	250	50
	1	47½	1532½	817.60	3.0	3.8	3.8	106	106	78	6.0	250	50
	2	50	1535	820.80	2.6	3.3	3.3	98	106	80	6.0	250	50
	3	52½	1537½	822.40	3.0	3.8	3.8	98	106	80	6.0	250	50
#4	4	55	1540	824.70	3.0	3.8	3.8	99	110	82	6.0	250	50
	5	57½	1542½	827.10	3.0	3.8	3.8	95	110	82	6.0	250	50

COMMENTS: Pre leak < .01 CFM
Post leak < .02 CFM

EPA (Dur) 235

TRAVERSE POINT NUMBER	SAMPLING TIME min	CLOCK TIME (24 hr CLOCK)	GAS METER READING (V_m), ft^3	VELOCITY HEAD (Δp_s), in H_2O	ORIFICE PRESSURE DIFFERENTIAL (ΔH), in H_2O DESIRED	ORIFICE PRESSURE DIFFERENTIAL (ΔH), in H_2O ACTUAL	STACK TEMPERATURE (T_s), °F	DRY GAS METER TEMPERATURE INLET ($T_{m\,in}$), °F	DRY GAS METER TEMPERATURE OUTLET ($T_{m\,out}$), °F	PUMP VACUUM, in Hg	SAMPLE BOX TEMPERATURE, °F	IMPINGER TEMPERATURE, °F
6	60	1545	835.5	3.0	3.8	3.8	94	110	82	6.0	250	50
7	62½	1547½	833	2.6	3.2	3.2	95	106	82	6.0	250	50
#5 8	65	1550	836	2.8	2.8	2.8	94	110	84	6.0	250	50
9	67½	1552½	838	2.8	3.8	3.8	110	110	86	6.0	250	50
Stop 10	70	1555	841.90	2.8	3.3	3.5	106	110	90	6.0	250	50
Start 1	75	949	841.90	1.7	2.3	2.3	140	54	55	6.0	250	50
2	72½	951½		1.9	2.5	2.5	109	57	54	6.0		
3	75	954	846.58	1.9	2.5	2.5	109	57	54	6.0		
4	77½	956½	847.96	1.7	2.3	2.3	110	62	54	6.0		
Stop 5		1015										
Start 1				1.7	2.3	2.3	110	54	54	4.0		
6	77½	1015½	848.60	1.7	2.3	2.3	110	56	54	4.0		
7	80	1018	850.17	1.2	1.5	1.5	110	62	54	5.0		
8	82½	1020½	852.48	1.5	1.9	1.9	110	65	54	5.0		
9	85	1023	854.38	1.7	2.2	2.2	110	69	55	5.0		
10	87½	1025½	856.60	1.6	2.05	2.05	110	71	55	5.0		
11	90	1028	858.85	1.7	2.2	2.2	108	72	56	5.0		
12	92½	1030½	860.62	1.6	2.05	2.05	109	73	57	5.0		
1	95	1033	862.70	1.4	1.8	1.8	109	74	57	6.0		
2	97½	1035½	864.95	1.8	2.35	2.35	110	75	58	6.0		
Stop 3	100	1038	867.585	2.0	2.6	2.6	109					
Start 1		1200										
1	102½	1202½	869.85	2.2	2.8	2.8	97	61	59	6.0		
5	105	1205	871.19	1.9	2.4	2.4	98	67	60	6.0		
6	107½	1207½	873.45	1.9	2.4	2.4	98	69	60	6.0		
1	110	1210	875.0	1.5	1.9	1.9	99	76	61	5.0		
Stop 2	112½	1212½	877.77	1.7	2.2	2.2	99	80	62	5.0		
Start 1		1220										
3	115	1230½	879.978	1.9	2.4	2.4	99	68	65	6.0		
4	117½	1233	882.34	2.1	2.7	2.7	96	75	65	6.0		
5	120	1235½	884.88	2.4	3.1	3.1	96	81	68	7.0		
6	122½	1238	887.34	2.2	2.9	2.9	104	86	67	7.0		
1	125	1240½	889.60	1.1	1.4	1.4	102	89	68	4.0		
2	127½	1243	891.60	1.6	2.05	2.05	102	88	68	5.0		
3	131	1245½	893.94	1.9	2.4	2.4	125	90	69	6.0		
4	133½	1248	896.38	2.1	2.7	2.7	129	92	70	6.5		
5	136	1250½	899.10	2.2	2.9	2.9	114	96	71	7.6		
6	138½	1253½	901.20	2.2	2.9	2.9	110	100	76	7.6		

EPA (Dun) 236
4 72

TRAVERSE POINT NUMBER	SAMPLING TIME min	CLOCK TIME (24 hr CLOCK)	GAS METER READING (V_m), ft^3	VELOCITY HEAD (Δp_s), in H_2O	ORIFICE PRESSURE DIFFERENTIAL (ΔH), in H_2O DESIRED	ORIFICE PRESSURE DIFFERENTIAL (ΔH), in H_2O ACTUAL	STACK TEMPERATURE (T_s), °F	DRY GAS METER TEMPERATURE INLET ($T_{m\,in}$), °F	DRY GAS METER TEMPERATURE OUTLET ($T_{m\,out}$), °F	PUMP VACUUM, in Hg	SAMPLE BOX TEMPERATURE, °F	IMPINGER TEMPERATURE, °F
6	1255	141	903.90	2.2	2.9	2.9	106	99	76	5	250	50
1	143½	1257½	905.90	1.0	1.3	1.3	108	99	76	5	250	50
2	146	1300	908.10	1.6	2.1	2.1	114	96	76	5	250	50
3	148½	1302½	910.30	2.0	2.8	2.8	110	94	76	5	250	50
4	151	1305	912.80	2.0	2.8	2.8	109	94	76	5	250	50
5	153½	1307½	915.30	1.9	2.6	2.6	110	94	76	5	250	50
6	156	1310	917.70	1.9	2.6	2.6	112	92	78	5	250	50
1	158½	1312½	920.0	1.5	2.0	2.0	110	92	78	5	250	50
1	161	1315	922.0	1.2	1.6	1.6	111	92	78	5	250	50
2	163½	1317½	924.0	1.6	2.1	2.1	110	90	79	5	250	50
3	166	1320	926.2	1.7	2.3	2.3	110	90	78	5	250	50
4	168½	1322½	928.6	1.8	2.3	2.3	115	90	76	5	250	50
5	171	1325	930.9	1.8	2.3	2.3	116	92	78	5	250	50
6	173½	1327½	933.5	1.9	2.6	2.4	108	92	78	5	250	50
1	176	1330	935.4	1.8	2.1	2.1	110	92	74	5	250	50
2	178½	1332½	937.9	1.9	2.6	2.6	108	90	74	5	250	50
3	181	1335	940.6	2.0	2.8	2.8	110	90	74	5	250	50
4	183½	1337½	943.1	2.0	2.8	2.8	110	90	74	5	250	50
5	186	1340	945.3	2.0	2.8	2.8	95	94	76	5	250	50
6	188½	1342½	948.26	2.0	2.8	2.8	98	92	76	5	250	50
	188.5		179.757	2.014			104.93		77.74			
			$\sqrt{\ }$	= 1.419								

EPA (Oct) 236
12

103.26 %

FIELD DATA

PLANT Kennecott Copper
DATE 11/18/78
SAMPLING LOCATION Conv. Duct
SAMPLE TYPE Aerosols
RUN NUMBER 78-20-2
OPERATOR Dortio/Rooney
AMBIENT TEMPERATURE 65
BAROMETRIC PRESSURE 25.95
STATIC PRESSURE, (P_s) -5.1" H_2O
FILTER NUMBER (s) 537

PROBE LENGTH AND TYPE 3' S.S
NOZZLE I.D. 3/16
ASSUMED MOISTURE, % 4%
SAMPLE BOX NUMBER
METER BOX NUMBER 223
METER $\Delta H_@$ 1.86
C FACTOR 1.0
PROBE HEATER SETTING 210
HEATER BOX SETTING 210
REFERENCE Δp 1.7

SCHEMATIC OF TRAVERSE POINT LAYOUT

READ AND RECORD ALL DATA EVERY 2 1/2 MINUTES

TRAVERSE POINT NUMBER	SAMPLING TIME, min	CLOCK TIME (24 hr CLOCK)	GAS METER READING (V_m), ft^3	VELOCITY HEAD (Δp_s), in. H_2O	ORIFICE PRESSURE DIFFERENTIAL (ΔH), in. H_2O DESIRED	ACTUAL	STACK TEMPERATURE (T_s), °F	DRY GAS METER TEMPERATURE INLET ($T_{m\,in}$), °F	OUTLET ($T_{m\,out}$), °F	PUMP VACUUM, in. Hg	SAMPLE BOX TEMPERATURE, °F	IMPINGER TEMPERATURE, °F
	0	954 1/2	949.399									
(West) 1	2 1/2	957	951.07	1.6	2.1	2.1	106	50	51	2.0	250	50
2	5	959 1/2	953.35	1.7	2.2	2.2	106	53	51	2.0		
3	7 1/2	962	955.50	1.9	2.45	2.45	106	58	51	2.0		
#1 4	10	964 1/2	957.00	1.9	2.45	2.45	106	62	52	2.0		
5	12 1/2	967	960.0	1.85	2.4	2.4	106	65	52	2.0		
6	15	969 1/2	963.1	1.5	2.5	2.5	106	72	54	2.0		
1	17 1/2	972	964.1	1.9	2.5	2.5	106	72	56	2.0		
2	20	974 1/2	966.6	1.9	2.5	2.5	106	76	58	2.0		
3	22 1/2	977	969.0	1.9	2.5	2.5	106	78	58	2.0		
4	25	979 1/2	971.1	1.9	2.5	2.5	106	78	58	2.0		
#2 5	27 1/2	982	973.6	1.8	2.4	2.4	100	80	60	2.0		
6	30	984 1/2	975.9	1.7	2.2	2.2	108	80	60	2.0		
1	30	985		~~1.6~~	~~2.0~~	~~2.0~~	~~105~~	~~66~~	~~62~~	~~2.0~~		
1	32 1/2	987 1/2	978.50	1.6	2.0	2.0	105	66	62	2.0		
2	35	990	980.40	1.6	2.0	2.0	99	72	64	2.0		
3	37 1/2	992 1/2	982.6	1.9	2.5	2.5	99	78	66	2.0		
4	40	995	984.9	1.9	2.5	2.5	120	80	68	2.0		
#3 5	42 1/2	997 1/2	987.2	1.9	2.5	2.5	113	82	68	2.0		
6	45	1000	990.0	1.9	2.5	2.5	111	84	66	2.0		
1	47 1/2	1002 1/2	992.9	1.9	2.5	2.5	112	84	66	2.0		
2	50	1005	994.8	1.8	2.4	2.4	110	88	68	2.0		
(4) 3	52 1/2	1007 1/2	996.5	1.8	2.4	2.4	110	88	68	2.0		
4	55	1010	999.0	1.8	2.4	2.4	99	88	70	2.0		

COMMENTS: Probe tip 2.01 cm

EPA (Dun 235

KC-CD-2 Pg 2

TRAVERSE POINT NUMBER	SAMPLING TIME min / CLOCK TIME (24 hr CLOCK)	GAS METER READING (V_m), ft^3	VELOCITY HEAD (Δp_s), in H_2O	ORIFICE PRESSURE DIFFERENTIAL (ΔH), in H_2O DESIRED	ORIFICE PRESSURE DIFFERENTIAL (ΔH), in H_2O ACTUAL	STACK TEMPERATURE (T_s), °F	DRY GAS METER TEMPERATURE INLET ($T_{m\,in}$), °F	DRY GAS METER TEMPERATURE OUTLET ($T_{m\,out}$), °F	PUMP VACUUM, in Hg	SAMPLE BOX TEMPERATURE, °F	IMPINGER TEMPERATURE, °F
5	57½ 1015½	000.138	2.0	2.8	2.8	104	90	70	2.0	250	50
6	60 1015	003.8	2.0	2.8	2.8	110	90	70	2.0	250	50
1	62½ 1020		1.6	2.0	2.0	105	90	74	2.0	250	50
2	65 1020	008.2	1.6	2.0	2.0	102	90	74	2.0	250	50
3	67½ 1022½	010.2	2.0	2.8	2.8	102	90	72	2.0	250	50
4	70 1025	012.4	2.0	2.8	2.8	100	90	72	2.0	250	50
5	72½ 1027½	014.8	2.0	2.8	2.8	106	92	76	2.0	250	50
6	75 1030	017.5	2.2	2.8	2.8	100	94	78	2.0	250	50
1	77½ 1032½	019.5	2.0	2.8	2.8	106	96	78	2.0	250	50
2	80 1035	022.2	2.2	2.8	2.8	89	92	78	2.0	250	50
3	82½ 1037½	024.6	1.5	1.9	1.9	90	92	78	2.0	250	50
4	85 1040	026.4	1.8	2.4	2.4	88	90	76	2.0	250	50
5	87½ 1042½	028.9	2.0	2.8	2.8	95	96	80	2.0	250	50
6	90 1045	031.2	1.9	2.5	2.5	99	94	78	2.0	250	50
	~~92½ 1047½~~	032.4	1.9	2.5	2.5	99	94	78	2.0	250	50
	91 1046										
	91 1100	032.4									
1	93½ 1102½	034.7	1.9	2.5	2.5	106	70	70	2.0	250	50
2	96 1105	036.8	1.9	2.5	2.5	100	74	70	2.0	250	50
3	98½ 1107½	039.3	1.9	2.5	2.5	104	80	76	2.0	250	50
4	101 1110	041.9	2.0	2.8	2.8	106	80	76	2.0	250	50
5	103½ 1112½	044.7	2.0	2.8	2.8	106	80	76	2.0	250	50
6	106 1115	046.6	2.1	2.8	2.8	102	86	72	2.0	250	50
1	108½ 1117½	048.8	1.7	2.3	2.3	105	86	72	2.0	250	50
2	111 1120	051.0	1.9	2.5	2.5	104	86	72	2.0	250	50
3	113½ 1122½	053.4	1.9	2.5	2.5	99	88	70	2.0	250	50
4	116 1125	055.8	1.8	2.4	2.4	102	88	72	2.0	250	50
5	118½ 1127½	058.2	1.8	2.4	2.4	100	88	72	2.0	250	50
6	121 1130	060.4	2.1	2.7	2.7	102	88	72	2.0	250	50
1	123½ 1132½	063.4	2.0	2.8	2.8	106	88	72	2.0	250	50
2	126 1135	065.1	1.6	2.0	2.0	105	88	72	2.0	250	50
3	128½ 1137½	067.4	1.9	2.5	2.5	100	88	72	2.0	250	50
4	131 1140	069.8	1.9	2.5	2.5	110	90	74	2.0	250	50
5	133½ 1142½	072.3	2.1	2.8	2.8	106	90	72	2.0	250	50
6	136 1145	074.8	2.2	3.0	3.0	95	90	72	2.0	250	50
1	138½ 1147½	077.2	1.7	2.4	2.4	96	90	72	2.0	250	50
2	141 1150	079.9	1.7	2.4	2.4	100	90	72	2.0	250	50

EPA (Dun) 236

TRAVERSE POINT NUMBER	SAMPLING TIME min / CLOCK TIME (24 hr CLOCK)	GAS METER READING (V_m), ft^3	VELOCITY HEAD (Δp_s), in H_2O	ORIFICE PRESSURE DIFFERENTIAL (ΔH), in H_2O DESIRED	ORIFICE PRESSURE DIFFERENTIAL (ΔH), in H_2O ACTUAL	STACK TEMPERATURE (T_s), °F	DRY GAS METER TEMPERATURE INLET ($T_{m\,in}$), °F	DRY GAS METER TEMPERATURE OUTLET ($T_{m\,out}$), °F	PUMP VACUUM, in Hg	SAMPLE BOX TEMPERATURE, °F	IMPINGER TEMPERATURE, °F
3	143½ 1150½	081.9	1.7	2.4	2.4	99	90	76	3	250	50
4	146 1155	084.2	1.9	2.5	2.5	101	90	76	3	250	50
5	148½ 1157½	086.6	1.7	2.5	2.5	100	90	76	3	250	50
6	151 1200	089.2	2.0	2.8	2.8	110	90	76	3	250	50
1	153½ 1202½	091.7	1.7	2.4	2.4	110	90	76	3	250	50
(5) 2	156 1205	093.9	1.6	2.1	2.1	108	90	76	3	250	50
3	158½ 1207½	96.1	1.6	2.4	2.4	90	90	76	3	250	50
4	161 1210	98.5	1.7	2.4	2.4	100	90	78	3	250	50
5	163½ 1212½	100.8	2.0	2.8	2.8	106	90	78	3	250	50
6	166 1215	103.2	1.8	2.4	2.4	106	90	78	3	250	50
1	168½ 1217½	105.6	1.8	2.4	2.4	104	90	78	3	250	50
2	171 1220	107.9	1.7	2.2	2.2	106	90	78	3	250	50
(6) 3	173½ 1222½	110.0	1.7	2.2	2.2	95	90	78	3	250	50
4	176 1225	112.3	1.9	2.5	2.5	99	90	78	3	250	50
5	178½ 1227½	114.2	1.9	2.5	2.5	96	90	78	3	250	50
6	181 1230	117.350	2.0	2.8	2.8	99	90	78	3	250	50
	181 min.	167.95 cfm	1.84			103.07	84.44	70.34			
							77.39				

EPA (Dun) 236
4 72

713 304mB

93.43

FIELD DATA

PLANT KENNECOTT COPPER
DATE 11/1/78
SAMPLING LOCATION CONVERTER
SAMPLE TYPE ARSENIC
RUN NUMBER KC-CD-3
OPERATOR KOONEY
AMBIENT TEMPERATURE 150°F
BAROMETRIC PRESSURE
STATIC PRESSURE, (P_s) -5.1" H_2O
FILTER NUMBER (s) 560

PROBE LENGTH AND TYPE 3' SS
NOZZLE I.D. .187
ASSUMED MOISTURE, % 4%
SAMPLE BOX NUMBER
METER BOX NUMBER 0235
METER $\Delta H_@$ 1.86
C FACTOR 1.0
PROBE HEATER SETTING 250
HEATER BOX SETTING 250
REFERENCE Δp 14

SCHEMATIC OF TRAVERSE POINT LAYOUT

READ AND RECORD ALL DATA EVERY 2½ MINUTES

TRAVERSE POINT NUMBER	SAMPLING TIME, min	CLOCK TIME (24 hr CLOCK)	GAS METER READING (V_m), ft^3	VELOCITY HEAD (Δp_s), in. H_2O	ORIFICE PRESSURE DIFFERENTIAL (ΔH), in. H_2O DESIRED	ACTUAL	STACK TEMPERATURE (T_s), °F	DRY GAS METER TEMPERATURE INLET ($T_{m\,in}$), °F	OUTLET ($T_{m\,out}$), °F	PUMP VACUUM, in. Hg	SAMPLE BOX TEMPERATURE, °F	IMPINGER TEMPERATURE, °F
	0	1417	117.978									
1	2½	1420	119.900	1.3	1.7	1.7	75	42	46	5	250	50
2	5	1422½	122.600	1.6	2.0	2.0	75	50	46	6	250	50
3	7½	1425	124.30	2.0	2.6	2.6	75	55	46	6	250	50
#1 4	10	1427½	126.70	2.0	2.6	2.6	65	58	46	6	250	50
5	12½	1430	128.60	2.0	2.6	2.1	65	60	45	6	250	50
6	15	1432½	130.6	2.0	2.6	2.6	65	60	45	6	250	50
1	17½	1435	132.0	1.9	2.5	2.5	65	60	45	6	250	50
2	20	1437½	135.3	2.0	2.6	2.6	65	60	45	6	250	50
3	22½	1440	137.6	2.0	2.6	2.6	65	64	45	8	250	50
#2 4	25	1442½	139.9	2.0	2.6	2.6	65	64	45	8	250	50
5	27½	1445	142.0	2.0	2.6	2.6	65	64	45	8	250	50
6	30	1447½	144.4	2.0	2.6	2.6	65	64	45	8	250	50
1	32½	1450	146.70	2.0	2.6	2.6	65	68	50	8	250	50
2	35	1452½	148.8	1.6	2.2	2.2	63	68	50	8	250	50
3	37½	1455	150.8	1.6	2.2	2.2	63	68	50	8	250	50
#3 4	40	1457½	153.2	1.8	2.2	2.2	63	68	50	8	250	50
5	42½	1500	155.2	2.0	2.6	2.6	63	68	50	8	250	50
6	45	1502½	157.4	1.8	2.2	2.2	64	68	50	8	250	50
1	47½	1505	159.6	1.8	2.2	2.2	64	68	50	8	250	50
2	50	1507½	161.7	1.8	2.2	2.2	64	70	52	8	250	50
#4 3	52½	1510	163.5	1.8	2.2	2.2	64	70	52	8	250	50
4	55	1512½	165.5	1.8	2.2	2.2	64	70	52	8	250	50
5	57½	1515	167.9	1.8	2.2	2.2	64	70	52	8	250	50

COMMENTS: Probe Clog 2.0/1.6 Fin

EPA (Dun 235

713

TRAVERSE POINT NUMBER	SAMPLING TIME min / CLOCK TIME (24 hr CLOCK)	GAS METER READING (V_m), ft^3	VELOCITY HEAD (Δp_s), in H_2O	ORIFICE PRESSURE DIFFERENTIAL (ΔH), in H_2O DESIRED	ACTUAL	STACK TEMPERATURE (T_s), °F	DRY GAS METER TEMPERATURE INLET ($T_{m\,in}$), °F	OUTLET ($T_{m\,out}$), °F	PUMP VACUUM, in Hg	SAMPLE BOX TEMPERATURE, °F	IMPINGER TEMPERATURE, °F
4	60 1517½	169.7	1.5	2.2	2.2	64	70	52	5	250	50
1	62½ 1520	171.1	1.6	2.6	2.6	64	70	52	5	250	50
2	65 1522½	172.4	1.5	2.6	2.6	64	64	52	3	250	50
3	67½ 1525	174.0	1.8	2.6	2.6	64	64	52	3	250	50
4	70 1527½	175.5	1.7	2.5	2.5	64	64	50	5	250	50
5	72½ 1530	177.5	1.5	2.6	2.6	63	63	52	5	250	50
6	75 1532½	179.3	1.7	2.5	2.5	63	63	52	5	250	50
1	80 1535	180.6	1.7	2.5	2.5	63	63	52	4	250	50
2	82½ 1537½	182.5	1.7	2.5	2.5	63	64	52	5	250	50
3	85 1540	184.9	1.7	2.5	2.5	63	66	54	5	250	50
4	87½ 1542½	186.9	2.0	2.9	2.9	63	66	54	5	250	50
5	90 1545	189.1	1.9	2.8	2.8	63	66	54	5	250	50
6	92½ 1547½	192.1	1.7	2.5	2.5	63	66	54	5	250	50
1	95 1550	194.1	1.7	2.5	2.5	63	66	54	5	250	50
2	97½ 1552½	195.8	1.7	2.5	2.5	63	66	54	5	250	50
3	100 1555	197.7	1.9	2.9	2.9	63	64	52	5	250	50
4	102½ 1557½	199.6	1.9	2.9	2.9	63	64	52	8	250	50
5	105 1600	202.1	1.9	2.9	2.9	63	66	52	8	250	50
6	107½ 1602½	204.5	1.8	2.9	2.9	63	66	52	6	250	50
1	110 1605	206.6	1.6	2.4	2.4	63	66	52	6	250	50
2	112½ 1607½	208.7	1.8	2.8	2.8	61	66	52	6	250	50
3	115 1610	210.8	1.9	2.8	2.8	61	64	52	6	250	50
4	117½ 1612½	213.0	1.9	2.8	2.8	61	66	52	6	250	50
5	120 1615	215.1	1.8	2.8	2.8	61	66	52	6	250	50
6	122½ 1617½	217.4	1.8	2.8	2.8	60	66	52	6	250	50
1	125 1620	219.4	1.6	2.5	2.5	60	66	52	6	250	50
2	127½ 1622½	221.6	1.9	2.8	2.8	56	66	52	6	250	50
3	130 1625	223.7	1.9	2.8	2.8	56	66	50	6	250	50
4	132½ 1627½	226.0	1.9	2.8	2.8	56	66	50	6	250	50
5	135 1630	228.0	1.9	2.8	2.8	56	64	50	6	250	50
6	137½ 1632½	230.2	1.9	2.8	2.8	56	64	52	7	250	50
1	140 1635	232.4	1.6	2.5	2.5	61	64	48	7	250	50
2	142½ 1637½	234.8	1.9	2.8	2.8	61	64	48	7	250	50
3	145 1640	236.8	1.9	2.8	2.8	61	64	50	7	250	50
4	147½ 1642½	238.9	1.8	2.8	2.8	61	62	50	7	250	50
5	150 1645	241.1	1.9	2.9	2.9	62	62	48	7	250	50
6	152½ 1647½	243.2	1.6	2.4	2.4	62	62	48	7	250	50

EPA (Dur) 236
4 72

713

TRAVERSE POINT NUMBER	SAMPLING TIME min / CLOCK TIME (24 hr CLOCK)	GAS METER READING (V_m), ft^3	VELOCITY HEAD (Δp_s), in H_2O	ORIFICE PRESSURE DIFFERENTIAL (ΔH), in H_2O DESIRED	ACTUAL	STACK TEMPERATURE (T_s), °F	DRY GAS METER TEMPERATURE INLET ($T_{m\,in}$), °F	OUTLET ($T_{m\,out}$), °F	PUMP VACUUM, in Hg	SAMPLE BOX TEMPERATURE, °F	IMPINGER TEMPERATURE, °F
1	155 1650	245.3	1.4	24	24	61	60	48	7	250	50
2	157½ 1652½	247.5	1.9	29	29	61	60	48	7	250	50
3	160 1655	249.5	1.9	29	29	61	60	48	7	250	50
4	162½ 1657½	251.7	2.0	3.0	3.0	61	60	50	7	250	50
5	165 1700	254.3	2.0	3.0	3.0	61	60	50	7	250	50
6	167½ 1702½	256.5	1.8	2.7	2.7	64	62	50	7	250	50
1	170 1705	258.5	1.8	2.7	2.7	64	62	50	7	250	50
2	172½ 1707½	260.8	1.9	3.0	3.0	64	65	50	7	250	50
3	175 1710	263.0	1.7	2.4	2.4	64	62	50	7	250	50
4	177½ 1712½	265.3	2.0	3.0	3.0	59	60	50	7	250	50
5	180 1715	267.5	2.0	3.0	3.0	59	60	50	7	250	50
6	182½ 1717½	269.920	1.4	2.6	2.6	58	60	48	7	250	50
	182½	151.94	1.819	2.6		61.3	56.50				

5

6

EPA (Dec) 236
22

FIELD DATA

PLANT Kennecott Magna
DATE 11/13/78
SAMPLING LOCATION Conc. Dryer
SAMPLE TYPE As
RUN NUMBER KC-08-2
OPERATOR
AMBIENT TEMPERATURE 28
BAROMETRIC PRESSURE
STATIC PRESSURE, (P_s)
FILTER NUMBER (s) 594

PROBE LENGTH AND TYPE 10' SS
NOZZLE I.D. 0.367
ASSUMED MOISTURE, % 20
SAMPLE BOX NUMBER
METER BOX NUMBER
METER $\Delta H_@$ 1.2
C FACTOR .75
PROBE HEATER SETTING
HEATER BOX SETTING
REFERENCE Δp 1.0

SCHEMATIC OF TRAVERSE POINT LAYOUT

READ AND RECORD ALL DATA EVERY 7.5 MINUTES

TRAVERSE POINT NUMBER	SAMPLING TIME, min / CLOCK TIME (24 hr CLOCK)	GAS METER READING (V_m), ft^3	VELOCITY HEAD (Δp_s), in. H_2O	ORIFICE PRESSURE DIFFERENTIAL (ΔH), in. H_2O DESIRED	ACTUAL	STACK TEMPERATURE (T_s), °F	DRY GAS METER TEMPERATURE INLET ($T_{m\,in}$), °F	OUTLET ($T_{m\,out}$), °F	PUMP VACUUM, in. Hg	SAMPLE BOX TEMPERATURE, °F	IMPINGER TEMPERATURE, °F
	12:00	376.862									
1	12:15½	383.2	.16	1.85	1.85	125	40	41	8.2	250	28
2	12:23	389.3	.19	2.2	2.2	128	60	42	10	250	30
3	12:30½	395.9	.19	2.2	2.2	130	70	44	10.5	250	40
4	12:38	402.9	.25	2.9	2.9	127	75	46	15	250	45
5	12:45½	410.1	.2	2.35	2.35	130	76	50	13	250	45
6	12:53	416.85	.22	2.5	2.5	133	81	51	13	250	42
	12:59	423.2									
1	1:06½	429.2	.15	1.75	1.75	129	60	50	8	250	38
2	1:14 / 1:18	437.3	.19	2.2	2.2	130	71	51	13	250	40
3	1:25½	443.4	.21	2.4	2.4	129	72	50	13.5	250	42
4	1:33	449.9	.22	2.5	2.5	129	78	52	14	250	45
5	1:40½		.22	2.5	2.5	129	83	54	14	250	46
6	1:48	457.357	.18	2.1	2.1	132	85	56	12	250	46
	90	80.489	.198	2.29		129.25	59.92				

COMMENTS: pretest leak check <0.02 @ 10 in Hg
post test leak check <0.02 @ 15 in Hg

EPA (Dull) 235

90M ≈ 227
T_s ≈ 160
ΔP ≈ .25

FIELD DATA

PLANT Cornwell – Macpac
DATE 11/18/78
SAMPLING LOCATION Concentrate dryer
SAMPLE TYPE As
RUN NUMBER One
OPERATOR Powell
AMBIENT TEMPERATURE 22
BAROMETRIC PRESSURE
STATIC PRESSURE, (P_s)
FILTER NUMBER (s) 562

PROBE LENGTH AND TYPE 10' SS
NOZZLE I.D. 0.367
ASSUMED MOISTURE, % 20
SAMPLE BOX NUMBER
METER BOX NUMBER
METER $\Delta H_@$ 1.7
C FACTOR 0.95
PROBE HEATER SETTING —
HEATER BOX SETTING 400°
REFERENCE Δp 0.16

SCHEMATIC OF TRAVERSE POINT LAYOUT

READ AND RECORD ALL DATA EVERY 7.5 MINUTES

TRAVERSE POINT NUMBER	CLOCK TIME (24 hr CLOCK) / SAMPLING TIME, min	GAS METER READING (V_m), ft^3	VELOCITY HEAD (Δp_s), in. H_2O	ORIFICE PRESSURE DIFFERENTIAL (ΔH), in. H_2O DESIRED	ACTUAL	STACK TEMPERATURE (T_s), °F	DRY GAS METER TEMPERATURE INLET ($T_{m\,in}$), °F	OUTLET ($T_{m\,out}$), °F	PUMP VACUUM, in. Hg	SAMPLE BOX TEMPERATURE, °F	IMPINGER TEMPERATURE, °F
	93½	~~247.968~~ 296.191									
1	9:40	302.3	.15	1.8	1.8	128	35	48	5.0	250	28
2	9:47 ½	308.4	.18	2.1	2.1	133	62	38	5.5	250	29
3	9:55	315.6	.21	2.5	2.5	145	68	41	6.7	250	34
4	10:02 ½	322.4	.23	2.7	2.7	186	72	45	7.5	250	38
5	10:10	329.3	.23	2.7	2.7	220	76	46	7.7	250	40
6	10:19 ½	335.7	.19	2.2	2.2	230	77	50	6.5	250	45
	10:25/10:37	341.9									
1	10:44 ½	~~341.9~~ 348.2	.17	1.95	1.95	214	52	48	5.5	250	36
2	10:52	356.3	.17	1.95	1.95	191	65	48	5.8	250	35
3	10:59 ½	362.4	.19	2.2	2.2	157	70	50	6.5	250	40
4	11:07	368.8	.22	2.55	2.55	132	75	52	7.9	250	45
5	11:14 ½	376.670	.22	2.55	2.55	124	78	52	8.0	250	45
6	11:22		.17	1.95	1.95	131	52	82	8.5	250	45
	~~120~~ 90	80.479									
			.194	~~2.63~~ 2.263		166.08	57.59				

COMMENTS: post test leak check <0.02 @ 12 in Hg
post test leak check <0.02 @ 8 "Hg

EPA-Dull 235

FIELD DATA

PLANT Kennecott - Magna
DATE 11/14/78
SAMPLING LOCATION One Dryer
SAMPLE TYPE As
RUN NUMBER KC-AB-3
OPERATOR
AMBIENT TEMPERATURE 29
BAROMETRIC PRESSURE
STATIC PRESSURE, (P_s) 0
FILTER NUMBER (s)

PROBE LENGTH AND TYPE 10' SS
NOZZLE I.D. 0.367
ASSUMED MOISTURE, % 20
SAMPLE BOX NUMBER
METER BOX NUMBER
METER $\Delta H_@$ 1.8
C FACTOR 0.75
PROBE HEATER SETTING —
HEATER BOX SETTING 400
REFERENCE Δp 1.6

SCHEMATIC OF TRAVERSE POINT LAYOUT

READ AND RECORD ALL DATA EVERY 7.5 MINUTES

TRAVERSE POINT NUMBER	CLOCK TIME (24 hr CLOCK) / SAMPLING TIME, min	GAS METER READING (V_m), ft^3	VELOCITY HEAD (Δp_s), in. H_2O	ORIFICE PRESSURE DIFFERENTIAL (ΔH), in. H_2O DESIRED	ACTUAL	STACK TEMPERATURE (T_s), °F	DRY GAS METER TEMPERATURE INLET ($T_{m\,in}$), °F	OUTLET ($T_{m\,out}$), °F	PUMP VACUUM, in. Hg	SAMPLE BOX TEMPERATURE, °F	IMPINGER TEMPERATURE, °F
	2:20	457.757									
1	2:27 1/2	464.8	.15	1.75	1.75	131	42	42	1.0	250	30
2	2:35	464.5	.17	1.95	1.95	130	44	58	1.0	250	35
3	2:42	471.2	.21	2.5	2.5	134	44	58	1.0	250	33
4	2:49 1/2	479.5	.23	2.7	2.7	133	71	45	1.0	250	39
5	2:58	490.3	.23	2.2	2.2	130	74	46	1.0	250	39
6	3:05 1/2	496.423	.17	1.95	1.95	110	73	58	1.0	250	39
	5:57	501.3									
1	~~5:59~~ 6:04 1/2	509.2	.18	2.1	2.1	130	26	26	2.1	250	26
2	6:12	516.1	.19	2.2	2.2	126	40	28	2.5	250	32
3	6:19 1/2	524.0	.21	2.5	2.5	130	50	30	2.9	250	38
4	6:28	531.2	.24	2.8	2.8	131	60	33	3.0	250	40
5	6:35 1/2	538.228	.23	2.7	2.7	132	64	38	3.0	250	45
6	6:43		.20	2.35	2.35	132	65	40	2.5	250	45
	90	80.4710	.20	2.31		118.25	41				

COMMENTS: H_2O_2 - 370 ml Pretest leak check <0.02 @ 11 in. Hg no ice needed in impinger box

EPA (Dwt) 235

93.7%

1 of 2

FIELD DATA

PLANT Kennecott - Magna
DATE 11/5/78
SAMPLING LOCATION inlet to acid plant
SAMPLE TYPE arsenic
RUN NUMBER one
OPERATOR Powell
AMBIENT TEMPERATURE 50
BAROMETRIC PRESSURE 25.98
STATIC PRESSURE, (P_s) -3.5 in. H_2O
FILTER NUMBER (s)

PROBE LENGTH AND TYPE 5' SS
NOZZLE I.D. 0.179
ASSUMED MOISTURE, % 6.3
SAMPLE BOX NUMBER
METER BOX NUMBER
METER $\Delta H_@$ 1.89
C FACTOR .98
PROBE HEATER SETTING 659°
HEATER BOX SETTING 400°
REFERENCE Δp 3.1

SCHEMATIC OF TRAVERSE POINT LAYOUT

READ AND RECORD ALL DATA EVERY 5 MINUTES

vertical

TRAVERSE POINT NUMBER	SAMPLING TIME, min / CLOCK TIME (24 hr CLOCK)	GAS METER READING (V_m), ft³	VELOCITY HEAD (Δp_s), in. H_2O	ORIFICE PRESSURE DIFFERENTIAL (ΔH), in. H_2O DESIRED	ACTUAL	STACK TEMPERATURE (T_s), °F	DRY GAS METER TEMPERATURE INLET ($T_{m\,in}$), °F	OUTLET ($T_{m\,out}$), °F	PUMP VACUUM, in. Hg	SAMPLE BOX TEMPERATURE, °F	IMPINGER TEMPERATURE, °F
	8:26	655.426									
1	8:31	657.1	.38	.225	.225	195	43	42	2.0	250	45
2	8:36	659.3	.72	.43	.43	394	49	42	3.0	250	45
3	8:41	661.7	.98	.58	.58	425	58	44	4.0	250	42
4	8:46	663.4	1.1	.66	.66	350	68	46	4.5	250	42
5	8:51	665.9	1.1	.66	.66	427	58	48	4.5	250	42
6	8:56	668.7	1.1	.66	.66	470	74	50	5.5	250	42
7	9:01	670.9	1.2	.72	.72	480	78	52	6.0	250	42
8	9:06	673.8	1.2	.72	.72	480	83	54	9.0	250	50
9	9:11	675.6	.98	.58	.58	517	83	58	13.0	250	52
10	9:16	677.8	.98	.58	.58	524	85	59	14.0	250	52
11	9:21	680.3	1.1	.66	.66	450	88	62	14.0	250	52
12	9:26 60	682.747	1.1	.66	.66	574	87	64	15.0	250	52
	leak check	683.052									
1	10:11	685.3	.92	.55	.55	519	62	58	2.0	250	58
2	10:16	687.1	1.1	.66	.66	524	70	60	2.0	250	58
3	10:21	690.4	1.4	.84	.84	425	78	61	2.0	250	58
4	10:26	693.1	1.4	.84	.84	387	81	62	2.0	250	55
5	10:31	695.8	1.4	.84	.84	350	84	63	2.0	250	52
6	10:36	697.4	1.4	.84	.84	318	86	64	2.0	250	52
7	~~10:41~~ 10:38 27	stop									
6	12:42 31	698.9	2.9	1.7	1.7	377	58	57	3.0	250	52
7	12:45 34	702.6	2.8	1.65	1.65	370	63	57	3.0	250	52
8	12:50 39		.91	.55	.55	383	70	58	2.0	250	52

horizontal

#1 Condenser running

COMMENTS: [illegible] leak check back < 0.02 cfm @ 10 in Hg

EPA (Dwt 235 leak check at traverse change < 0.02 cfm @ 15" Hg

TRAVERSE POINT NUMBER	SAMPLING TIME min / CLOCK TIME (24 hr CLOCK)	GAS METER READING (V_m), ft^3	VELOCITY HEAD (Δp_s), in H_2O	ORIFICE PRESSURE DIFFERENTIAL (ΔH), in H_2O		STACK TEMPERATURE (T_s), °F	DRY GAS METER TEMPERATURE		PUMP VACUUM, in Hg	SAMPLE BOX TEMPERATURE, °F	IMPINGER TEMPERATURE, °F
				DESIRED	ACTUAL		INLET ($T_{m\,in}$), °F	OUTLET ($T_{m\,out}$), °F			
	12 55 44	705.10									
9	1:00 49	706.7	.55	.33	.33	393	63	59	1.5	250	55
10	1:05 54	708.7	.71	.43	.43	410	76	61	2.0	250	55
11	1:10 59	711.2	.77	.47	.47	411	79	62	2.0	250	55
12	1:15 64	713.087	.82	.49	.49	420	82	63	2.5	250	55
	64	57.356	1.76	.69		420.76	64.18				
	60										
	124										

EPA (Out) 236
4 72

FIELD DATA

PLANT Kennecott - Magna
DATE 11/9/78
SAMPLING LOCATION Inlet To H_2SO_4 Plant
SAMPLE TYPE As
RUN NUMBER 2
OPERATOR Powell/Kelley
AMBIENT TEMPERATURE 55
BAROMETRIC PRESSURE 25.68
STATIC PRESSURE, (P_s) -3.5
FILTER NUMBER (s) ~~[illegible]~~ 537

PROBE LENGTH AND TYPE 6' SS
NOZZLE I.D. 0.185
ASSUMED MOISTURE, % 6%
SAMPLE BOX NUMBER
METER BOX NUMBER
METER $\Delta H_@$ 1.13
C FACTOR .98
PROBE HEATER SETTING 600°
HEATER BOX SETTING 400°F
REFERENCE Δp 2.4

SCHEMATIC OF TRAVERSE POINT LAYOUT

READ AND RECORD ALL DATA EVERY 5 MINUTES

TRAVERSE POINT NUMBER	SAMPLING TIME, min	CLOCK TIME (24 hr CLOCK)	GAS METER READING (V_m), ft^3	VELOCITY HEAD (Δp_s), in. H_2O	ORIFICE PRESSURE DIFFERENTIAL (ΔH), in. H_2O DESIRED	ACTUAL	STACK TEMPERATURE (T_s), °F	DRY GAS METER TEMPERATURE INLET ($T_{m\,in}$), °F	OUTLET ($T_{m\,out}$), °F	PUMP VACUUM, in. Hg	SAMPLE BOX TEMPERATURE, °F	IMPINGER TEMPERATURE, °F
	1:40		713.673									
1	1:47	5	715.5	.96	.72	.72	443	65	64	3.0	250	55
2	1:52	10	718.472	.57	.42	.42	474	82	66	3.2	250	55
3	1:57	15	721.361	.57	.42	.42	410	86	66	3.0	250	55
4	2:02	20	723.645	.50	.40	.40	489	86	68	3.0	250	55
5	2:07	25	725.487	~~[illegible]~~ 1.8	.34	.34	510	84	68	3.0	250	55
6	2:11	29	727.525	~~[illegible]~~ 3.6	1.1	1.1	535	88	70	3.0	250	55
7	2:16	34	729.743	1.7	1.3	1.3	553	92	82	3.0	250	55
8	2:21	39	731.382	1.7	1.3	1.3	545	86	64	3.0	250	55
9	2:26	44	733.432	1.7	1.3	1.9	553	94	76	3.0	250	55
10	2:31	49	stop 735									
11												
11	2:40		735.421	~~[illegible]~~	~~[illegible]~~	~~[illegible]~~	~~556~~	~~80~~	~~74~~	~~3.0~~	~~250~~	~~55~~
11	2:45	54	738.902	1.2	1.6	1.6	556	80	74	3.0	250	55
12	2:50	59	740.84	1.7	1.3	1.3	525	92	78	4.0	250	55
			743.983									
1	4:45		745.2	.62	.47	.47	475	56	56	3.0	250	50
2	4:50	64	747.5	.91	.70	.70	376	62	57	3.0	250	50
3	4:55	69	750.1	.85	.66	.66	456	70	58	3.2	250	50
4	5:00	74	753.0	.91	.70	.70	486	75	58	3.6	250	50
5	5:05	79	755.5	1.2	.92	.92	412	83	62	4.0	250	50
6	5:10	84	758.1	1.2	.92	.92	382	86	63	3.9	250	50
7	5:15	89	761.0	.91	.70	.70	417	87	64	4.0	250	50
8	5:20	94		.83	.64	.64	454	90	65	4.0	250	50

COMMENTS

EPA (Dec) 235

TRAVERSE POINT NUMBER	SAMPLING TIME min / CLOCK TIME (24 hr CLOCK)	GAS METER READING (V_m), ft^3	VELOCITY HEAD (Δp_s), in H_2O	ORIFICE PRESSURE DIFFERENTIAL (ΔH), in H_2O DESIRED	ACTUAL	STACK TEMPERATURE (T_s), °F	DRY GAS METER TEMPERATURE INLET ($T_{m\ in}$), °F	OUTLET ($T_{m\ out}$), °F	PUMP VACUUM, in Hg	SAMPLE BOX TEMPERATURE, °F	IMPINGER TEMPERATURE °F
	5:25 99	764.2									
9	5:30 104	766.0	1.1	.84	.84	471	90	68	6.8	250	50
10	5:35 109	768.1	.98	.75	.75	485	91	68	12	250	50
11	5:40 114	770.0	.96	.73	.73	498	91	70	17	250	50
12	5:45 119	772.467	.62	.47	.47	504	91	70	22	250	50
	119	~~[illegible]~~ 55.6510	1.03	.82		476.17	74.83				

EPA (Dur) 235
4-72

I-94.54

1 of 2

FIELD DATA

PLANT Kennecott - Magna
DATE 11/7/22
SAMPLING LOCATION inlet to acid Plant
SAMPLE TYPE As
RUN NUMBER KC-AI-3
OPERATOR Powell
AMBIENT TEMPERATURE 50
BAROMETRIC PRESSURE 25.48
STATIC PRESSURE, (P_s) -3.5
FILTER NUMBER (s) 539
540

PROBE LENGTH AND TYPE 6' SS
NOZZLE I.D. 0.179
ASSUMED MOISTURE, % 4%
SAMPLE BOX NUMBER
METER BOX NUMBER 2363
METER $\Delta H_@$ 1.85
C FACTOR .98
PROBE HEATER SETTING 60%
HEATER BOX SETTING 400°F
REFERENCE Δp 0.32

SCHEMATIC OF TRAVERSE POINT LAYOUT

READ AND RECORD ALL DATA EVERY 5 MINUTES

TRAVERSE POINT NUMBER	CLOCK TIME (24 hr CLOCK)	SAMPLING TIME, min	GAS METER READING (V_m), ft^3	VELOCITY HEAD (Δp_s), in. H_2O	ORIFICE PRESSURE DIFFERENTIAL (ΔH), in. H_2O DESIRED	ACTUAL	STACK TEMPERATURE (T_s), °F	DRY GAS METER TEMPERATURE INLET ($T_{m\,in}$), °F	OUTLET ($T_{m\,out}$), °F	PUMP VACUUM, in. Hg	SAMPLE BOX TEMPERATURE, °F	IMPINGER TEMPERATURE, °F
	8:58		791.303									
1	9:03	5	792.5	.25	.14	.14	305	46	46	0	250	40
2	9:08	10	794.4	.65	.37	.37	371	51	46	2.0	250	40
3	9:13	15	797.1	1.5	.86	.86	375	59	46	2.1	250	40
4	9:18	20	800.1	1.6	.91	.91	390	58	48	2.5	250	40
5	9:23	25	803.3	1.5	.86	.86	410	75	50	3.0	250	50
6	9:28	30	805.7	1.5	.86	.86	415	78	54	7.0	250	58
7	9:33	35	808.5	1.5	.86	.86	405	80	56	7.0	250	58
8	9:38	40	812.0	1.5	.86	.86	330	83	58	5.0	250	58
9 stop	9:43	45 start 10:17	813.362	.5	.33	.33	335	83	60	2.0	250	58
10	10:22	50	816.4	.9	.6	.6	353	57	58	2.0	250	58
11	10:27	55	818.4	1.2	.8	.8	400	67	57	2.5	250	40
12	10:32	60	820.8	.85	.58	.58	295	74	60	2.2	250	40
1	10:57	65	822.4	.35	.23	.23	99	64	60	2.0	250	45
2	11:02	70	824.3	.51	.35	.35	348	66	61	2.0	250	45
3	11:07	75	825.4	.58	.38	.38	393	73	62	2.5	250	45
4	11:12	80 11:29 start	827.9	.9	.6	.6	475	62	60	2.0	250	56
5	11:34	85	830.4	.85	.58	.58	490	72	62	2.0	250	48
6	11:39	90	832.8	.91	.66	.66	510	77	62	2.0	250	48
7	11:44	95	835.4	1.1	.68	.68	508	80	63	2.3	250	48
8	11:49	100	838.1	1.0	.62	.62	523	82	65	2.5	250	49
9	11:54	105	840.2	1.2	.73	.73	500	84	68	2.6	250	49
10	11:59	110	842.7	1.2	.73	.73	525	86	67	2.6	250	49

Stop new filter

vertical

stop new filter

COMMENTS: pretest, leak check < 0.01 @ 10 inHg.

846.845

EPA-Dun 235

TRAVERSE POINT NUMBER	SAMPLING TIME min / CLOCK TIME (24 hr CLOCK)	GAS METER READING (V_m), ft^3	VELOCITY HEAD (Δp_s), in H_2O	ORIFICE PRESSURE DIFFERENTIAL (ΔH), in H_2O DESIRED	ORIFICE PRESSURE DIFFERENTIAL (ΔH), in H_2O ACTUAL	STACK TEMPERATURE (T_s), °F	DRY GAS METER TEMPERATURE INLET ($T_{m\,in}$), °F	DRY GAS METER TEMPERATURE OUTLET ($T_{m\,out}$), °F	PUMP VACUUM, in Hg	SAMPLE BOX TEMPERATURE, °F	IMPINGER TEMPERATURE, °F
	12:04	842.7									
11	12:09 115	844.8	.82	.51	.51	539	87	68	7.2	250	65
12	12:14 120	846.845	.7	.43	.43	531	87	69	8.0	250	65
			.472								
	120	55.540	~~.482~~	.60		409.37	65.0				

EPA (Dur) 236
4 72

111.34%

FIELD DATA

PLANT Kennecott Copper
DATE 11-6-78
SAMPLING LOCATION Converter ~~East~~ Rollout
SAMPLE TYPE Arsenic
RUN NUMBER ~~KC-CE-A~~ KC-CRO-1
OPERATOR Rodney
AMBIENT TEMPERATURE
BAROMETRIC PRESSURE 25.89
STATIC PRESSURE, (P_s) -5.1 H_2O
FILTER NUMBER (s) 532

PROBE LENGTH AND TYPE 3' SS
NOZZLE I.D. 3/16
ASSUMED MOISTURE, % 4%
SAMPLE BOX NUMBER 2010 / 2315
METER BOX NUMBER 2010 / 2315
METER $\Delta H_@$ 1.86
C FACTOR 1.0
PROBE HEATER SETTING 250
HEATER BOX SETTING 250
REFERENCE Δp 1.4

SCHEMATIC OF TRAVERSE POINT LAYOUT

READ AND RECORD ALL DATA EVERY 2 MINUTES

TRAVERSE POINT NUMBER	SAMPLING TIME, min	CLOCK TIME (24 hr CLOCK)	GAS METER READING (V_m), ft^3	VELOCITY HEAD (Δp_s), in. H_2O	ORIFICE PRESSURE DIFFERENTIAL (ΔH), in. H_2O DESIRED	ORIFICE PRESSURE DIFFERENTIAL (ΔH), in. H_2O ACTUAL	STACK TEMPERATURE (T_s), °F	DRY GAS METER TEMPERATURE INLET ($T_{m\,in}$), °F	DRY GAS METER TEMPERATURE OUTLET ($T_{m\,out}$), °F	PUMP VACUUM, in. Hg	SAMPLE BOX TEMPERATURE, °F	IMPINGER TEMPERATURE, °F
	0	1520	261.284									
1	2	1522	264.40	1.4	2.5	2.5	99	60	50	4.0	250	50
2	4	1524	266.00	1.4	2.5	2.5	95	66	58	4.0	250	50
3	6	1526	268.20	1.9	2.5	2.5	95	66	60	4.0	250	50
(1) 4	8	1528	270.10	1.9	2.5	2.5	98	66	60	4.0	250	50
5	10	1530		1.9	2.5	2.5	95	72	60	4.0	250	50
6	12	1532		1.7	2.4	2.1	95	88	60	4.0	250	50
1	14	1534		1.0	1.2	1.2	97	86	62	4.0	250	50
2	16	1532		1.7	2.4	2.4	95	86	64	4.0	250	50
(2) 3	18	1538		2.2	3.0	3.0	95	86	64	4.0	250	50
4	20	1540		2.2	3.0	3.0	95	88	66	4.0	250	50
5	22	1542		2.3	3.0	3.0	96	88	66	4.0	250	50
6	24	1544		2.3	3.01	3.0	89	88	66	4.0	250	50
1	26	1546		.70	.85	.85	90	88	64	4.0	250	50
(3) 2	28	1548		.85	1.5	1.5	95	89	64	4.0	250	50
3	30	1550		1.5	2.5	2.5	95	90	64	4.0	250	50
4	32	1552		1.5	2.5	2.5	95	88	64	4.0	250	50
stop 5	35	1555	291.031	1.5	2.5	2.5	95	88	64	4.0	250	50
start 4	35	1001	630.668	1.9	2.3	2.3	140	52	52	4.0	250	50
5	37	1003	632.20	1.8	2.3	2.3	140	52	52	4.0	250	50
5	39	1005	634.60	1.9	2.5	2.5	109	52	52	4.0	250	50
6	41	1007	636.40	1.6	2.4	2.4	110	60	52	4.0	250	50
(4) start 1	41	1015	636.41	1.4	~~1.8~~	~~1.8~~						
2	42	1017	638.81	1.4	1.8	1.8	110	64	50	4.0	250	50

COMMENTS:

Pre leak check 0.01 cfm
Post leak check 0.01 cfm

EPA (Dur) 235

TRAVERSE POINT NUMBER	SAMPLING TIME min	CLOCK TIME (24 hr CLOCK)	GAS METER READING (V_m), ft^3	VELOCITY HEAD (Δp_s), in H_2O	ORIFICE PRESSURE DIFFERENTIAL (ΔH), in H_2O DESIRED	ORIFICE PRESSURE DIFFERENTIAL (ΔH), in H_2O ACTUAL	STACK TEMPERATURE (T_s), °F	DRY GAS METER TEMPERATURE INLET ($T_{m\,in}$), °F	DRY GAS METER TEMPERATURE OUTLET ($T_{m\,out}$), °F	PUMP VACUUM, in Hg	SAMPLE BOX TEMPERATURE, °F	IMPINGER TEMPERATURE, °F
			638.10									
2	44	1019	639.40	1.4	1.8	1.8	110	74	58	4.0	250	50
3	46	1021	641.00	1.6	2.0	2.0	110	74	58	4.0	250	50
4	48	1023	642.50	1.7	2.2	2.2	110	80	60	4.0	250	50
5	50	1025	644.30	1.7	2.2	2.2	110	80	60	4.0	250	50
6	52	1027	646.60	1.5	1.86	1.80	108	82	64	4.0	250	50
1	54	1029	648.20	1.0	1.2	1.2	107	84	64	4.0	250	50
2	56	1031	649.30	1.3	1.6	1.6	109	84	64	4.0	250	50
3	58	1033	650.70	1.5	1.9	1.9	109	84	64	4.0	250	50
4	60	1035	657.99	1.5	2.0	2.0	110	88	66	4.0	250	50
5	62	1037	653.10	1.7	2.2	2.2	108	82	66	4.0	250	50
6	64	1039	655.70	1.7	2.2	2.2	109	82	66	4.0	250	50
				~~1.3~~	~~1.6~~	~~1.6~~						
1	64	1202		1.3	1.6	1.6	97	68	66	4.0	250	50
1	66	1204	657.20	1.4	1.8	1.8	98	72	70	4.0	250	50
2	68	1206	658.70	1.6	2.0	2.0	98	78	70	4.0	250	50
3	70	1208	660.30	1.6	2.0	2.0	99	82	70	4.0	250	50
4	72	1210	662.0	1.6	2.0	2.0	99	86	70	4.0	250	50
5	74	1212	663.7	1.6	2.0	2.0	99	90	72	4.0	250	50
6	76	1214	665.5									
	76	1230		~~1.0~~	~~1.3~~	~~1.3~~						
1	78	1232	666.90	1.0	1.3	1.3	99	82	72	4.0	250	50
2	80	1234	668.60	1.4	1.8	1.8	96	84	72	4.0	250	50
3	82	1236	670.20	1.6	2.0	2.0	96	84	74	4.0	250	50
4	84	1238	671.9	1.6	2.0	2.0	99	88	74	4.0	250	50
5	86	1240	673.7	1.7	2.2	2.2	104	88	76	4.0	250	50
6	88	1242	675.66	1.7	2.2	2.2	102	95	76	4.0	250	50
	88 min		74.74 cfm	1.57	2.13		100.26	77.34	62.60			
								69.97				

(4) (5) (5)

EPA (Dun) 236
4 72

EKA 105.44

FIELD DATA

PLANT Kenn. Copper
DATE 11/18/78
SAMPLING LOCATION Converter Roll Out
SAMPLE TYPE [illegible]
RUN NUMBER KC-CC-2
OPERATOR Rooney
AMBIENT TEMPERATURE 65
BAROMETRIC PRESSURE 23.84
STATIC PRESSURE, (P_s) -3.1 in. H_2O
FILTER NUMBER (s)

PROBE LENGTH AND TYPE 3' SS
NOZZLE I.D. 3/16
ASSUMED MOISTURE, % 4%
SAMPLE BOX NUMBER
METER BOX NUMBER 2315
METER $\Delta H_@$ 1.86
C FACTOR 1.0
PROBE HEATER SETTING 250
HEATER BOX SETTING 250
REFERENCE Δp 1.4

SCHEMATIC OF TRAVERSE POINT LAYOUT

READ AND RECORD ALL DATA EVERY 2½ MINUTES

	TRAVERSE POINT NUMBER	SAMPLING TIME, min	CLOCK TIME (24 hr CLOCK)	GAS METER READING (V_m), ft^3	VELOCITY HEAD (Δp_s), in. H_2O	ORIFICE PRESSURE DIFFERENTIAL (ΔH), in. H_2O DESIRED	ORIFICE PRESSURE DIFFERENTIAL (ΔH), in. H_2O ACTUAL	STACK TEMPERATURE (T_s), °F	DRY GAS METER TEMPERATURE INLET ($T_{m\,in}$), °F	DRY GAS METER TEMPERATURE OUTLET ($T_{m\,out}$), °F	PUMP VACUUM, in. Hg	SAMPLE BOX TEMPERATURE, °F	IMPINGER TEMPERATURE, °F
		0	933	677.927									
	1	2½	935½	680.10	1.6	2.1	2.1	106	52	52	10.0	250	50
	2	5	938	682.99	1.7	2.2	2.2	100	57	52	15.0		
	3	7½	940½	684.40	1.9	2.45	2.45	106	63	53	19.0		
#1	4	10	943	686.40	1.9	2.45	2.40	106	69	54	19.0		
	5	12½	945½	688.8	1.85	2.4		106	71	54	20.0		
	6	15	948	694.1	1.75	2.2		106	74	60	20.0		
	1	17½	951½	696.10	1.2	1.5	1.5	106	80	58	20.0		
	2	20	954	697.70	1.2	1.5	1.5	106	86	60	20.0		
64	3	22½	957	698.9	1.6	2.0	2.0	106	86	62	20.0		
	4	25	959½	701.1	1.6	2.0	2.0	106	90	62	20.0		
#2	5	27½	962	703.1	1.6	2.0	2.0	100	92	62	20.0		
	6	30	964½	705.4	1.6	2.0	2.0	98	92	62	20.0		
	1	32½	967		1.6	2.0	2.0	105	66	62	20.0		
	2	32½	967½	708.0	1.6	2.0	2.0	105	66	62	20.0		
	3	35	970	709.9	1.4	1.8	1.8	99	78	66	20.0		
	3	37½	972½	711.9	1.4	1.8	1.8	99	84	66	20.0		
#3	4	40	975	714.1	1.4	1.8	1.8	120	88	68	20.0		
	5	42½	977½	716.2	1.5	1.8	1.8	113	88	68	20.0		
	6	45	1000	718.5	1.1	1.4	1.4	111	90	68	20.0		
	1	47½	1002½	720.3	1.1	1.4	1.4	112	90	68	20.0		
	2	50	1005	722.0	1.5	1.8	1.8	110	90	70	20.0		
	3	52½	1007½	724.0	1.6	2.0	2.0	109	92	70	20.0		
	4	55	1010	726.00	1.6	2.0	2.0	99	92	70			

COMMENTS:

1.53

EPA-Durr 235

TRAVERSE POINT NUMBER	SAMPLING TIME min / CLOCK TIME (24 hr CLOCK)	GAS METER READING (V_m), ft^3	VELOCITY HEAD (Δp_s), in H_2O	ORIFICE PRESSURE DIFFERENTIAL (ΔH), in H_2O		STACK TEMPERATURE (T_s), °F	DRY GAS METER TEMPERATURE		PUMP VACUUM, in Hg	SAMPLE BOX TEMPERATURE, °F	IMPINGER TEMPERATURE, °F
				DESIRED	ACTUAL		INLET ($T_{m\,in}$), °F	OUTLET ($T_{m\,out}$), °F			
5	57½ 1012½	727.9	1.4	2.0	2.0	104	92	70	20.0	250	50
6	60 1015	729.0	1.5	2.0	2.0	110	96	70	20.0	250	50
1	62½ 1017½		1.5	2.0	2.0	110	96	72	20.0	250	50
2	65 1020	733.938	1.6	2.0	2.0	112	96	74	20.0	250	50
3											
	65 min	56.01	1.53	2.0		106.35	82.62	64.58			
							73.60				

(5)

EPA (Dun 236
4 72

FIELD DATA

PLANT Kennecott - Magna
DATE
SAMPLING LOCATION Concentrate Dryer
SAMPLE TYPE
RUN NUMBER
OPERATOR
AMBIENT TEMPERATURE
BAROMETRIC PRESSURE
STATIC PRESSURE, (P_s)
METER NUMBER (s)

Moisture

PROBE LENGTH AND TYPE
NOZZLE I.D.
ASSUMED MOISTURE, %
SAMPLE BOX NUMBER
METER BOX NUMBER
METER $\Delta H_@$
C FACTOR
PROBE HEATER SETTING
HEATER BOX SETTING
REFERENCE Δp

SCHEMATIC OF TRAVERSE POINT LAYOUT

READ AND RECORD ALL DATA EVERY _____ MINUTES

Ref. 16

TRAVERSE POINT NUMBER	CLOCK TIME (24 hr CLOCK) / SAMPLING TIME, min	GAS METER READING (V_m), ft^3	VELOCITY HEAD (Δp_s), in. H_2O	ORIFICE PRESSURE DIFFERENTIAL (ΔH), in. H_2O DESIRED	ORIFICE PRESSURE DIFFERENTIAL (ΔH), in. H_2O ACTUAL	STACK TEMPERATURE (T_s), °F	DRY GAS METER TEMPERATURE INLET ($T_{m\,in}$), °F	DRY GAS METER TEMPERATURE OUTLET ($T_{m\,out}$), °F	PUMP VACUUM, in. Hg	SAMPLE BOX TEMPERATURE, °F	IMPINGER TEMPERATURE, °F
		275.003									
	2:59					120	40	40			33
	2:16	285.044				120	52	40			33
						120	56	41			33
		10 [illegible]	45.1 [illegible]								
								3			
		40 [illegible]	[illegible]			[illegible]	[illegible]			19.74	[illegible]
		10 [illegible]	[illegible]			[illegible]		19.6		[illegible]	[illegible]
			[illegible]			[illegible]					
						2.2 [illegible]					
					2.2 [illegible]					19.74	

COMMENTS:

EPA-Dun 235

TRW

GAS SAMPLING FIELD DATA

Material Sampled for H_2O

Date 11/6/78

Plant Kennecott, Magna

Bar. Pressure 25.98 "Hg.

Ambient Temp. 45 °F

Run No. one

Power Stat Setting

Filter Used: Yes ____ No X

Operator Kelley

Location entrance to H_2SO_4 Plant

Comments:

	CLOCK TIME	METER (Ft^3)	FLOW METER SETTING (CFH)	METER TEMPERATURE IN		Stack Temp
$\Delta P = 2.4$	2:21	638.682	1.35 ΔH	58	56	465
	2:26	642.5	1.35	66	56	470
2.3	2:31	646.2	1.35	73	58	457
	2:36	648.852	1.35	78	58	
		10.17			62.875	

Comments:

200 ml H_2O – 199 ml +12.7g

250 grams silica gel – 263.7g

Impinger Bucket No. ____

Meter Box No. ____

ENVIRONMENTAL ENGINEERING OPERATIONS OF TRW INC. • ONE SPACE PARK, REDONDO BEACH, CALIFORNIA 90278 •
(213) 536-3894

INORGANIC GASES

Sample No. _____

I.D. Number _____

Site KENNECOTT MATTE TAPPING, Source MATTE TAPPING

Type GRAB BAG SAMPLE Analyst _____

Description _____

Sample Date 11/1/78 CAL Gas _____

Run Date 11/2/78 CAL Date _____

RECORDER"

MV Range 1 Chart Speed (Cm/min) 4 cm/min

Integrator (cnt/min) 12000 Attenuation CAL

GAS CHROMATOGRAPH

G.C. CARLE Detector Current (Chart Rd.) 98°C

Column Type PORAPAK Q MOLE SIEVE Injector Temp. (Chart Rd.) 98°C

Col. Flow cc/min 15 PSI Column Temp (Chart Rd.) 98°C

Carrier Gas He Sample Loop (ml) 1

Col. Pres. Drop (kg/cm^2) _____

RESULTS

	%		%
CO_2	.14	N_2	79.42
O_2	20.439	CO	.003

Closure _____

Unknown Peaks _____

SO_2 ANALYSES

Instrument _____ Zero Rd. _____ Run Date _____

Span (ppm) _____ Sample Rd. _____ SO_2 (ppm) _____

Setting (ppm) _____ Zero Rd. _____

CAL Dial _____ Zero Dial _____

NO_x ANALYSES

Instrument _____ Zero Rd. NO_x _____ NO _____ Run Date _____

Span (ppm) NO_x _____ NO _____ Sample Rd. NO_x _____ Sample Rd. NO _____

Setting (ppm) NO_x _____ NO _____ Zero Rd. NO_x _____ NO _____

Span Dial _____

NO_x _____ ppm

NO _____ ppm

A3. Analytical Data Sheets

TRW

701

ANALYTICAL DATA

PLANT Kenn. Copper

DATE 11/1/78

SAMPLING LOCATION Matte Tapping

SAMPLE TYPE Arsenic

RUN NUMBER KC-MT-2

SAMPLE BOX NUMBER

CLEAN-UP MAN

COMMENTS:

FRONT HALF

		LABORATORY RESULTS
ACETONE WASH OF NOZZLE, PROBE, CYCLONE (BYPASS), FLASK, FRONT HALF OF FILTER HOLDER	CONTAINER	1.428 mg
FILTER NUMBER ~~403~~ 402	CONTAINER	.295 mg
	FRONT HALF SUBTOTAL	1.723 mg

BACK HALF

IMPINGER CONTENTS AND WATER WASH OF IMPINGERS, CONNECTORS, AND BACK HALF OF FILTER HOLDER	CONTAINER	1.148 mg
	ETHER-CHLOROFORM EXTRACTION	mg
ACETONE WASH OF IMPINGERS, CONNECTORS, AND BACK HALF OF FILTER HOLDER	CONTAINER	mg
	BACK HALF SUBTOTAL	mg
	TOTAL WEIGHT	mg

MOISTURE

	142	3145	Total
IMPINGERS			
FINAL VOLUME	292 ml	453 ml	745 ml
INITIAL VOLUME	300 ml	450 ml	750 ml
NET VOLUME	-8 ml	3 ml	-5 ml
SILICA GEL			
FINAL WEIGHT	269.6 g	g	g
INITIAL WEIGHT	250 g	g	g
NET WEIGHT	19.6 g	g	g

TOTAL MOISTURE 14.6 g

TRW

700

ANALYTICAL DATA

PLANT Kennecott Copper

DATE 11/8/78

SAMPLING LOCATION Matte Tapping

SAMPLE TYPE Arsonic

RUN NUMBER KC-MT-1

SAMPLE BOX NUMBER

CLEAN-UP MAN S DePillo

COMMENTS:

FRONT HALF

		LABORATORY RESULTS
ACETONE WASH OF NOZZLE, PROBE, CYCLONE (BYPASS), FLASK, FRONT HALF OF FILTER HOLDER	CONTAINER	1.058 mg
FILTER NUMBER ~~102~~ 528	CONTAINER	1220 mg
	FRONT HALF SUBTOTAL	1.278 mg

BACK HALF

IMPINGER CONTENTS AND WATER WASH OF IMPINGERS, CONNECTORS, AND BACK HALF OF FILTER HOLDER	CONTAINER	1254 mg
	ETHER-CHLOROFORM EXTRACTION	mg
ACETONE WASH OF IMPINGERS, CONNECTORS, AND BACK HALF OF FILTER HOLDER	CONTAINER	mg
	BACK HALF SUBTOTAL	mg
	TOTAL WEIGHT	mg

MOISTURE

	~~102~~	3,4,5	Total
IMPINGERS			
FINAL VOLUME	292 ml	462 ml	754 ml
INITIAL VOLUME	300 ml	450 ml	750 ml
NET VOLUME	-8 ml	12 ml	4 ml
SILICA GEL			
FINAL WEIGHT	265.2 g	g	g
INITIAL WEIGHT	250 g	g	g
NET WEIGHT	15.2 g	g	g

TOTAL MOISTURE 19.2 g

TRW

705

ANALYTICAL DATA

PLANT Kennecott Copper

DATE 11/2/78

SAMPLING LOCATION Matte Tapping

SAMPLE TYPE Arsenic

RUN NUMBER KC-MT-3

SAMPLE BOX NUMBER

CLEAN-UP MAN S. DePilto

COMMENTS:

FRONT HALF

LABORATORY RESULTS

ACETONE WASH OF NOZZLE, PROBE, CYCLONE (BYPASS), FLASK, FRONT HALF OF FILTER HOLDER — CONTAINER _____ 3.321 mg

FILTER NUMBER 526 — CONTAINER _____ .750 mg

FRONT HALF SUBTOTAL 4.071 mg

BACK HALF

IMPINGER CONTENTS AND WATER WASH OF IMPINGERS, CONNECTORS, AND BACK HALF OF FILTER HOLDER — CONTAINER _____ .738 mg

ETHER-CHLOROFORM EXTRACTION _____ mg

ACETONE WASH OF IMPINGERS, CONNECTORS, AND BACK HALF OF FILTER HOLDER — CONTAINER _____ _____ mg

BACK HALF SUBTOTAL _____ mg

TOTAL WEIGHT _____ mg

MOISTURE

	#2	3,4,5	Total
IMPINGERS			
FINAL VOLUME	294 ml	439ml	733ml
INITIAL VOLUME	300 ml	450ml	750ml
NET VOLUME	-6 ml	-11ml	-17ml
SILICA GEL			
FINAL WEIGHT	265.5 g	_____ g	_____ g
INITIAL WEIGHT	250 g	_____ g	_____ g
NET WEIGHT	15.5 g	_____ g	_____ g

TOTAL MOISTURE 0 g

TRW

702

ANALYTICAL DATA

PLANT Kenn. Copper

DATE 11/1/78

SAMPLING LOCATION Slag Tapping

SAMPLE TYPE Arsenic

RUN NUMBER KC-ST-1

SAMPLE BOX NUMBER

CLEAN-UP MAN

COMMENTS:

FRONT HALF

		LABORATORY RESULTS
ACETONE WASH OF NOZZLE, PROBE, CYCLONE (BYPASS), FLASK, FRONT HALF OF FILTER HOLDER	CONTAINER	.580 mg
FILTER NUMBER 404	CONTAINER	.210 mg
	FRONT HALF SUBTOTAL	.790 mg

BACK HALF

IMPINGER CONTENTS AND WATER WASH OF IMPINGERS, CONNECTORS, AND BACK HALF OF FILTER HOLDER	CONTAINER	.147 mg
	ETHER-CHLOROFORM EXTRACTION	mg
ACETONE WASH OF IMPINGERS, CONNECTORS, AND BACK HALF OF FILTER HOLDER	CONTAINER	mg
	BACK HALF SUBTOTAL	mg
	TOTAL WEIGHT	mg

MOISTURE

	1+2	3,4,+5	Total
IMPINGERS			
FINAL VOLUME	298 ml	446ml	744ml
INITIAL VOLUME	300 ml	450ml	750ml
NET VOLUME	-2 ml	-4ml	-6ml
SILICA GEL			
FINAL WEIGHT	258.7 g	g	g
INITIAL WEIGHT	250 g	g	g
NET WEIGHT	8.7 g	g	g

TOTAL MOISTURE 2.7 g

TRW

703

ANALYTICAL DATA

PLANT Conn. Copper

DATE 11/2/78

SAMPLING LOCATION Slag Tapping

SAMPLE TYPE Arsenic

RUN NUMBER KC-ST-2

SAMPLE BOX NUMBER

CLEAN-UP MAN

COMMENTS:

FRONT HALF

		LABORATORY RESULTS
ACETONE WASH OF NOZZLE, PROBE, CYCLONE (BYPASS), FLASK, FRONT HALF OF FILTER HOLDER	CONTAINER	.930 mg
FILTER NUMBER 525	CONTAINER	.065 mg
	FRONT HALF SUBTOTAL	.995 mg

BACK HALF

IMPINGER CONTENTS AND WATER WASH OF IMPINGERS, CONNECTORS, AND BACK HALF OF FILTER HOLDER	CONTAINER	1.591 mg
	ETHER-CHLOROFORM EXTRACTION	mg
ACETONE WASH OF IMPINGERS, CONNECTORS, AND BACK HALF OF FILTER HOLDER	CONTAINER	mg
	BACK HALF SUBTOTAL	mg
	TOTAL WEIGHT	mg

MOISTURE

	H2	3,4,5	Total
IMPINGERS			
FINAL VOLUME	446 ml	448ml	744ml
INITIAL VOLUME	450 ml	450ml	750ml
NET VOLUME	-4 ml	-2ml	-6ml
SILICA GEL			
FINAL WEIGHT	279.3 g	g	g
INITIAL WEIGHT	250 g	g	g
NET WEIGHT	29.3 g	g	g

74

TOTAL MOISTURE 23.3 g

TRW

704

ANALYTICAL DATA

PLANT Kennecott Copper

DATE 11/2/78

SAMPLING LOCATION Slag Tapping

SAMPLE TYPE Arsenic

RUN NUMBER KC-ST-3

SAMPLE BOX NUMBER

CLEAN-UP MAN S. DePillo

COMMENTS:

FRONT HALF

LABORATORY RESULTS

ACETONE WASH OF NOZZLE, PROBE, CYCLONE (BYPASS), FLASK, FRONT HALF OF FILTER HOLDER — CONTAINER _____ .315 mg

FILTER NUMBER 527 — CONTAINER _____ .085 mg

FRONT HALF SUBTOTAL .400 mg

BACK HALF

IMPINGER CONTENTS AND WATER WASH OF IMPINGERS, CONNECTORS, AND BACK HALF OF FILTER HOLDER — CONTAINER _____ .100 mg

ETHER-CHLOROFORM EXTRACTION _____ mg

ACETONE WASH OF IMPINGERS, CONNECTORS, AND BACK HALF OF FILTER HOLDER — CONTAINER _____ _____ mg

BACK HALF SUBTOTAL _____ mg

TOTAL WEIGHT _____ mg

MOISTURE

	1+2	3,4,5	Total
IMPINGERS			
FINAL VOLUME	302 ml	469 ml	771 ml
INITIAL VOLUME	300 ml	450 ml	750 ml
NET VOLUME	2 ml	-1 ml	1 ml
SILICA GEL			
FINAL WEIGHT	275 g	_____ g	_____ g
INITIAL WEIGHT	250 g	_____ g	_____ g
NET WEIGHT	25 g	_____ g	_____ g

75

TOTAL MOISTURE 26.0 g

TRW

708

ANALYTICAL DATA

PLANT Kennecott (Copper COMMENTS:

DATE 11/1/78

SAMPLING LOCATION Converter Duct (Copper Blow)

SAMPLE TYPE Arsenic

RUN NUMBER KC-CD-1

SAMPLE BOX NUMBER

CLEAN-UP MAN

FRONT HALF

		LABORATORY RESULTS
ACETONE WASH OF NOZZLE, PROBE, CYCLONE (BYPASS), FLASK, FRONT HALF OF FILTER HOLDER	CONTAINER	2.655 mg
FILTER NUMBER	CONTAINER	.130 mg
	FRONT HALF SUBTOTAL	2.785 mg

BACK HALF

IMPINGER CONTENTS AND WATER WASH OF IMPINGERS, CONNECTORS, AND BACK HALF OF FILTER HOLDER	CONTAINER	.615 mg
	ETHER-CHLOROFORM EXTRACTION	mg
ACETONE WASH OF IMPINGERS, CONNECTORS, AND BACK HALF OF FILTER HOLDER	CONTAINER	mg
	BACK HALF SUBTOTAL	mg
	TOTAL WEIGHT	mg

MOISTURE

	1+2	3,4+5	Total
IMPINGERS			
FINAL VOLUME	304 ml	450 ml	754 ml
INITIAL VOLUME	300 ml	450 ml	750 ml
NET VOLUME	-34 ml	2 ml	-34 ml
SILICA GEL			
FINAL WEIGHT	274.3 g	g	g
INITIAL WEIGHT	250 g	g	g
NET WEIGHT	24.3 g	g	g

76

TOTAL MOISTURE 0 g

TRW

712

ANALYTICAL DATA

PLANT Vonnecott Copper

DATE 11/8/78

SAMPLING LOCATION Converter Dust (Copper Blow)

SAMPLE TYPE Arsenic

RUN NUMBER KC-CD-2

SAMPLE BOX NUMBER

CLEAN-UP MAN Sharon DeFillo

COMMENTS:

FRONT HALF

		LABORATORY RESULTS
ACETONE WASH OF NOZZLE, PROBE, CYCLONE (BYPASS), FLASK, FRONT HALF OF FILTER HOLDER	CONTAINER	1.100 mg
FILTER NUMBER	CONTAINER	.125 mg
	FRONT HALF SUBTOTAL	1.225 mg

BACK HALF

IMPINGER CONTENTS AND WATER WASH OF IMPINGERS, CONNECTORS, AND BACK HALF OF FILTER HOLDER	CONTAINER	1.650 mg
	ETHER-CHLOROFORM EXTRACTION	mg
ACETONE WASH OF IMPINGERS, CONNECTORS, AND BACK HALF OF FILTER HOLDER	CONTAINER	mg
	BACK HALF SUBTOTAL	mg
	TOTAL WEIGHT	mg

MOISTURE

	#2	3,4,5	Total
IMPINGERS			
FINAL VOLUME	281 ml	468	749 ml
INITIAL VOLUME	300 ml	450 ml	750 ml
NET VOLUME	-19 ml	18 ml	-1 ml
SILICA GEL			
FINAL WEIGHT	275.6 g	g	g
INITIAL WEIGHT	250 g	g	g
NET WEIGHT	25.6 g	g	g

TOTAL MOISTURE 24.6 g

TRW

713

ANALYTICAL DATA

PLANT Kennecott Copper

DATE 11/9/78

SAMPLING LOCATION Converter Duct (Copper Blow)

SAMPLE TYPE Arsenic

RUN NUMBER KC-CD-3

SAMPLE BOX NUMBER

CLEAN-UP MAN S. DePillo

COMMENTS:

FRONT HALF

		LABORATORY RESULTS
ACETONE WASH OF NOZZLE, PROBE, CYCLONE (BYPASS), FLASK, FRONT HALF OF FILTER HOLDER	CONTAINER	2.600 mg
FILTER NUMBER 560	CONTAINER	1.300 mg
FRONT HALF SUBTOTAL		3.900 mg

BACK HALF

IMPINGER CONTENTS AND WATER WASH OF IMPINGERS, CONNECTORS, AND BACK HALF OF FILTER HOLDER	CONTAINER	1.050 mg
	ETHER-CHLOROFORM EXTRACTION	mg
ACETONE WASH OF IMPINGERS, CONNECTORS, AND BACK HALF OF FILTER HOLDER	CONTAINER	mg
	BACK HALF SUBTOTAL	mg
	TOTAL WEIGHT	mg

MOISTURE

	#2	3,4,+5	Total
IMPINGERS			
FINAL VOLUME	290 ml	46 ml	75 ml
INITIAL VOLUME	300 ml	45 ml	75 ml
NET VOLUME	-10 ml	1 ml	1 ml
SILICA GEL			
FINAL WEIGHT	279.4 g	g	g
INITIAL WEIGHT	250 g	g	g
NET WEIGHT	29.4 g	g	g

TOTAL MOISTURE 30.4 g

TRW

708

ANALYTICAL DATA

PLANT Kennecott Copper

DATE 11/1/78

SAMPLING LOCATION Acid Plant Inlet

SAMPLE TYPE Arsenic

RUN NUMBER KC-AI-1

SAMPLE BOX NUMBER

CLEAN-UP MAN

COMMENTS:

FRONT HALF

		LABORATORY RESULTS
ACETONE WASH OF NOZZLE, PROBE, CYCLONE (BYPASS), FLASK, FRONT HALF OF FILTER HOLDER	CONTAINER	1.100 mg
FILTER NUMBER #533	CONTAINER	10.00 mg
#534		
FRONT HALF SUBTOTAL		11.100 mg

BACK HALF

IMPINGER CONTENTS AND WATER WASH OF IMPINGERS, CONNECTORS, AND BACK HALF OF FILTER HOLDER	CONTAINER	7.00 mg
	ETHER-CHLOROFORM EXTRACTION	mg
ACETONE WASH OF IMPINGERS, CONNECTORS, AND BACK HALF OF FILTER HOLDER	CONTAINER	mg
	BACK HALF SUBTOTAL	mg
	TOTAL WEIGHT	mg

MOISTURE 1+2

		3,4,+5	Total
IMPINGERS			
FINAL VOLUME	~~912~~ ml	~~721~~ ml	121 ml
INITIAL VOLUME	300 ml	900 ml	~~750 ml~~ 1200 ml
NET VOLUME	~~-8~~ ml	2 ml	13 ml
SILICA GEL			
FINAL WEIGHT	284 g	~~559.2~~ g	~~543.2~~ g
INITIAL WEIGHT	254 g	500 g	500 g
NET WEIGHT	~~34~~ g	~~59.2~~ g	~~43.2~~ g

TOTAL MOISTURE ~~470~~ 46.2 g

TRW

709

ANALYTICAL DATA

PLANT Kennecott Copper

DATE 11/7/78

SAMPLING LOCATION Fid Plant Inlet

SAMPLE TYPE Arsenic

RUN NUMBER KC-FI-2

SAMPLE BOX NUMBER

CLEAN-UP MAN S. DeFilic

COMMENTS:

FRONT HALF

		LABORATORY RESULTS
ACETONE WASH OF NOZZLE, PROBE, CYCLONE (BYPASS), FLASK, FRONT HALF OF FILTER HOLDER	CONTAINER	1700 mg
FILTER NUMBER 563	CONTAINER	9-900 mg
537		

FRONT HALF SUBTOTAL 70.60 mg

BACK HALF

IMPINGER CONTENTS AND WATER WASH OF IMPINGERS, CONNECTORS, AND BACK HALF OF FILTER HOLDER	CONTAINER	1067 mg
	ETHER-CHLOROFORM EXTRACTION	mg
ACETONE WASH OF IMPINGERS, CONNECTORS, AND BACK HALF OF FILTER HOLDER	CONTAINER	mg

BACK HALF SUBTOTAL mg

TOTAL WEIGHT mg

MOISTURE

	#2	3,4,+5	Total
IMPINGERS		443ml	740ml
FINAL VOLUME	297 ml		
INITIAL VOLUME	500 ml	450ml	750ml
NET VOLUME	-3 ml	-7ml	-10ml
SILICA GEL			
FINAL WEIGHT	292.4 g	g	g
INITIAL WEIGHT	250 g	g	g
NET WEIGHT	42.4 g	g	g

80

TOTAL MOISTURE 32.4 g

TRW

710

ANALYTICAL DATA

PLANT Kennecott Copper

DATE 11/8/78

SAMPLING LOCATION Acid Plant Inlet

SAMPLE TYPE Isokinetic

RUN NUMBER KC-AI-3

SAMPLE BOX NUMBER

CLEAN-UP MAN S. DePillo

COMMENTS:

FRONT HALF

		LABORATORY RESULTS
ACETONE WASH OF NOZZLE, PROBE, CYCLONE (BYPASS), FLASK, FRONT HALF OF FILTER HOLDER	CONTAINER	1290 mg
FILTER NUMBER 539	CONTAINER	6.30 mg
540		
	FRONT HALF SUBTOTAL	6.520 mg

BACK HALF

IMPINGER CONTENTS AND WATER WASH OF IMPINGERS, CONNECTORS, AND BACK HALF OF FILTER HOLDER	CONTAINER	1154 mg
	ETHER-CHLOROFORM EXTRACTION	mg
ACETONE WASH OF IMPINGERS, CONNECTORS, AND BACK HALF OF FILTER HOLDER	CONTAINER	mg
	BACK HALF SUBTOTAL	mg
	TOTAL WEIGHT	mg

MOISTURE 142

		3,4,+5	Total
IMPINGERS			
FINAL VOLUME	305 ml	609 ml	914 ml
INITIAL VOLUME	300 ml	600 ml	900 ml
NET VOLUME	5 ml	9 ml	14 ml

SILICA GEL				
FINAL WEIGHT	274.2 g	g	g	
INITIAL WEIGHT	250 g	g	g	
NET WEIGHT	24.2 g	g	g	

TOTAL MOISTURE 38.2 g

TRW

706

ANALYTICAL DATA

PLANT Kennecott Copper

DATE 11/6/78

SAMPLING LOCATION Converter (Roll-out)

SAMPLE TYPE Arsenic

RUN NUMBER KC-CR10-1

SAMPLE BOX NUMBER

CLEAN-UP MAN Sharon DePilo

COMMENTS:

FRONT HALF

LABORATORY RESULTS

ACETONE WASH OF NOZZLE, PROBE, CYCLONE (BYPASS), FLASK, FRONT HALF OF FILTER HOLDER — CONTAINER ____ .460 mg

FILTER NUMBER 532 — CONTAINER ____ .330 mg

FRONT HALF SUBTOTAL .790 mg

BACK HALF

IMPINGER CONTENTS AND WATER WASH OF IMPINGERS, CONNECTORS, AND BACK HALF OF FILTER HOLDER — CONTAINER ____ .020 mg

ETHER-CHLOROFORM EXTRACTION ____ mg

ACETONE WASH OF IMPINGERS, CONNECTORS, AND BACK HALF OF FILTER HOLDER — CONTAINER ____ mg

BACK HALF SUBTOTAL ____ mg

TOTAL WEIGHT ____ mg

MOISTURE

142

		3,4,+5	Total
IMPINGERS			
FINAL VOLUME	~~308~~ ml	455 ml	753 ml
INITIAL VOLUME	306 ml	450 ml	750 ml
NET VOLUME	~~-2~~ ml	5 ml	3 ml

SILICA GEL			
FINAL WEIGHT	267.1 g	____ g	____ g
INITIAL WEIGHT	250 g	____ g	____ g
NET WEIGHT	17.1 g	____ g	____ g

TOTAL MOISTURE 20.1 g

TRW

711

ANALYTICAL DATA

PLANT Kennecott Copper

DATE 11/8/78

SAMPLING LOCATION Converter (Roll-out)

SAMPLE TYPE Isokinetic

RUN NUMBER KC-CP0-2

SAMPLE BOX NUMBER

CLEAN-UP MAN Sharon DeFillo

COMMENTS:

FRONT HALF

		LABORATORY RESULTS
ACETONE WASH OF NOZZLE, PROBE, CYCLONE (BYPASS), FLASK, FRONT HALF OF FILTER HOLDER	CONTAINER	1.210 mg
FILTER NUMBER #538	CONTAINER	.345 mg
FRONT HALF SUBTOTAL		1.590 mg

BACK HALF

IMPINGER CONTENTS AND WATER WASH OF IMPINGERS, CONNECTORS, AND BACK HALF OF FILTER HOLDER	CONTAINER	.080 mg
	ETHER-CHLOROFORM EXTRACTION	mg
ACETONE WASH OF IMPINGERS, CONNECTORS, AND BACK HALF OF FILTER HOLDER	CONTAINER	mg
	BACK HALF SUBTOTAL	mg
	TOTAL WEIGHT	mg

MOISTURE

	1+2	3,4,5	Total
IMPINGERS			
FINAL VOLUME	290 ml	452ml	742ml
INITIAL VOLUME	300 ml	450ml	750ml
NET VOLUME	-10 ml	2ml	-8ml
SILICA GEL			
FINAL WEIGHT	265.3 g	g	g
INITIAL WEIGHT	250 g	g	g
NET WEIGHT	15.3 g	g	g

TOTAL MOISTURE 7.3 g

TRW

714

ANALYTICAL DATA

PLANT Vonnecott Copper

DATE 11/9/78

SAMPLING LOCATION Concentrate Dryer

SAMPLE TYPE Arsenic

RUN NUMBER KC-DR-1

SAMPLE BOX NUMBER

CLEAN-UP MAN

COMMENTS:

FRONT HALF

		LABORATORY RESULTS
ACETONE WASH OF NOZZLE, PROBE, CYCLONE (BYPASS)	CONTAINER	1146 mg

TRW

ANALYTICAL DATA

PLANT Kennecott Copper

DATE 11/14/78

SAMPLING LOCATION Dryer outlet

SAMPLE TYPE Arsenic

RUN NUMBER KC-DR-2

SAMPLE BOX NUMBER

CLEAN-UP MAN

COMMENTS:

FRONT HALF

		LABORATORY RESULTS
ACETONE WASH OF NOZZLE, PROBE, CYCLONE (BYPASS), FLASK, FRONT HALF OF FILTER HOLDER	CONTAINER	2.098 mg
FILTER NUMBER 594	CONTAINER	.042 mg
	FRONT HALF SUBTOTAL	2.140 mg

BACK HALF

IMPINGER CONTENTS AND WATER WASH OF IMPINGERS, CONNECTORS, AND BACK HALF OF FILTER HOLDER	CONTAINER	.027 mg
	ETHER-CHLOROFORM EXTRACTION	mg
ACETONE WASH OF IMPINGERS, CONNECTORS, AND BACK HALF OF FILTER HOLDER	CONTAINER	mg
	BACK HALF SUBTOTAL	mg
	TOTAL WEIGHT	mg

MOISTURE

	1,2	3,4,5
IMPINGERS		
FINAL VOLUME	308 ml	448
INITIAL VOLUME	300 ml	450
NET VOLUME	8 ml	-2
SILICA GEL		
FINAL WEIGHT	272 g	g g
INITIAL WEIGHT	250 g	g g
NET WEIGHT	22 g	g g

404.
382
22

Flag

TOTAL MOISTURE 337.6 ~~280~~ g

TRW

ANALYTICAL DATA

PLANT Kennecott

DATE

SAMPLING LOCATION Dryer Cyclone

SAMPLE TYPE KC – D12 – 3 Arsenic

RUN NUMBER KC – D12 – 3

SAMPLE BOX NUMBER

CLEAN-UP MAN

COMMENTS:

FRONT HALF

LABORATORY RESULTS

ACETONE WASH OF NOZZLE, PROBE, CYCLONE (BYPASS), FLASK, FRONT HALF OF FILTER HOLDER

CONTAINER 3.915 mg

FILTER NUMBER 593

CONTAINER .470 mg

FRONT HALF SUBTOTAL 4.385 mg

BACK HALF

IMPINGER CONTENTS AND WATER WASH OF IMPINGERS, CONNECTORS, AND BACK HALF OF FILTER HOLDER

CONTAINER .340 mg

ETHER-CHLOROFORM EXTRACTION mg

ACETONE WASH OF IMPINGERS, CONNECTORS, AND BACK HALF OF FILTER HOLDER

CONTAINER mg

BACK HALF SUBTOTAL mg

TOTAL WEIGHT mg

MOISTURE

IMPINGERS		
FINAL VOLUME	284 ml	362
INITIAL VOLUME	360 ml	370
NET VOLUME	-76 ml	-2

Condensate on flow line = 2.4 gm

SILICA GEL			
FINAL WEIGHT	262 g	g	g
INITIAL WEIGHT	250 g	g	g
NET WEIGHT	12 g	g	g

TOTAL MOISTURE 288.0 g

A4. Meter Box Calibration Data Sheets

GLASS INNOVATION

DATE MARCH 3, 1978 BOX # #5

BAROMETRIC PRESSURE P_b 29.98 in. Hg DRY GASMETER # #5

TOM ROONEY

Orifice Manometer Settling H (in. H_2O)	Gas Volume Wet Test Meter V_w (ft^3)	Gas Volume Dry Gas Meter V_d (ft^3)	Temperature: Wet Test Meter T_w (°F)	Temperature: Dry Gas Meter: Inlet Td (°F)	Temperature: Dry Gas Meter: Outlet T_{do} (°F)	Temperature: Dry Gas Meter: Average T_d (°F)	Time Θ (min.)	Y	ΔHΘ
0.5	5.001	5.015	71	75	75	75	11.20	1.003	1.40
~~1.0~~ .5	5.001	5.045	71	78	78	78	11.20	1.003	1.39
~~2.0~~ 1.0	5.250	5.349	71	80	80	80	8.57	.996	1.47
~~4.0~~ 1.0	5.001	5.110	71	80	80	80	8.23	.993	1.46
~~6.0~~ 20	11.00	11.478	71	85	85	85	13.05	.979	1.54
~~8.0~~ 2.0	10.00	10.235	71	88	88	88	11.60	1.00	1.46
							Average	.996	1.45

Calculations

ΔH	$\frac{\Delta H}{13.6}$	Y: $\frac{V_w P_b (T_d + 460)}{V_d (P_b + \frac{H}{13.6} (T_w + 460)}$	ΔHΘ: $\frac{0.0317 \Delta H}{P_b (T_d + 460)}$	ΔHΘ: $\frac{(T_w + 460)\Theta}{V_w}$ ^{2}
0.5	0.0368			
1.0	0.0737			
2.0	0.147			
4.0	0.294			
6.0	0.431			
8.0	0.588			

ATE MARCH 1, 1978

BAROMETRIC PRESSURE P_b 29.48 in. Hg

Glass-Innovation
BOX # GI #7

DRY GASMETER # 7

BY TOM ROONEY

Orifice Manometer Settling H (in. H_2O)	Gas Volume Wet Test Meter V_w (ft^3)	Gas Volume Dry Gas Meter V_d (ft^3)	Temperature: Wet Test Meter T_w (°F)	Temperature: Dry Gas Meter Inlet Td (°F)	Temperature: Dry Gas Meter Outlet T_{do} (°F)	Temperature: Dry Gas Meter Average T_d (°F)	Time θ (min.)	Y	Δ H@
0.5	5.007	5.036	70	75	75	75	12.93	1.002	1.882
~~1.0~~ .5	5.010	5.017	70	78	78	78	12.76	1.012	1.820
~~2.0~~ 1.0	5.0035	5.026	70	82	82	82	8.80	1.015	1.723
~~4.0~~ 1.0	5.005	4.972	70	84	84	84	8.53	1.030	1.612
~~6.0~~ 2.0	10.007	10.311	70	85	88	88	12.08	.998	1.606
~~8.0~~ 2.0	10.005	10.210	70	93	93	93	11.86	1.017	1.535
1.0	4.995	5.168	70	94	94	94	8.55	1.007	1.547
							Average	1.011	1.682

Calculations

ΔH	$\frac{\Delta H}{13.6}$	Y: $\frac{V_w P_b (T_d + 460)}{V_d (P_b + \frac{H}{13.6} (T_w + 460}$	ΔH@: $\frac{0.0317 \Delta H}{P_b (T_d + 460)}$	ΔH@: $\left[\frac{(T_w + 460)\theta}{V_w}\right]^2$
0.5	0.0368			
1.0	0.0737			
2.0	0.147			
4.0	0.294			
6.0	0.431			
8.0	0.588			

DATE MARCH 2, 1978 BOX # 2010

BAROMETRIC PRESSURE P_b 29.82 in. Hg DRY GASMETER # 2010

FOR TOM ROONEY

Orifice Manometer Settling H (in. H_2O)	Gas Volume Wet Test Meter V_w (ft^3)	Gas Volume Dry Gas Meter V_d (ft^3)	Temperature: Wet Test Meter T_w (°F)	Temperature: Dry Gas Meter Inlet Td (°F)	Temperature: Dry Gas Meter Outlet T_{do} (°F)	Temperature: Dry Gas Meter Average T_d (°F)	Time θ (min.)	Y	ΔHθ
0.5	5.00	5.180	71	82	82	82	12.45	.984	1.711
~~1.0~~ .5	5.00	5.08	71	86	86	86	12.72	1.010	1.773
~~2.0~~ 1.0	5.00	5.13	71	88	88	88	9.10	1.000	1.808
~~4.0~~ 1.0	5.001	5.14	71	88	88	88	9.18	1.00	1.839
~~6.0~~ 2.0	10.005	10.374	71	88	88	88	13.45	.99	1.97
~~8.0~~ 2.0	10.00	10.426	71	88	88	88	13.52	.985	1.99
							Average	.99	1.85

Calculations

ΔH	$\frac{\Delta H}{13.6}$	Y: $\frac{V_w P_b (T_d + 460)}{V_d (P_b + \frac{H}{13.6} (T_w + 460)}$	ΔHθ: $\frac{0.0317 \Delta H}{P_b (T_d + 460)}$	ΔHθ: $\left[\frac{(T_w + 460)\theta}{V_w}\right]^2$
0.5	0.0368			
1.0	0.0737			
2.0	0.147			
4.0	0.294			
6.0	0.431			
8.0	0.588			

KAC

DATE MARCH 2, 1978

BOX # 2188

BAROMETRIC PRESSURE P_b 29.87 in. Hg

DRY GASMETER # 2188

BY TOM ROONEY

Orifice Manometer Settling H in. H_2O)	Gas Volume Wet Test Meter V_w (ft^3)	Gas Volume Dry Gas Meter V_d (ft^3)	Temperature: Wet Test Meter T_w (°F)	Temperature: Dry Gas Meter: Inlet Td (°F)	Temperature: Dry Gas Meter: Outlet T_{do} (°F)	Temperature: Dry Gas Meter: Average T_d (°F)	Time Θ (min.)	Y	ΔHΘ
0.5	5.99	6.17	71	74	74	74	15.21	.975	1.806
~~1.0~~ .5	4.99	4.952	71	83	83	83	12.10	1.029	1.620
~~2.0~~ 1.0	5.25	5.287	71	90	90	90	9.15	1.026	1.652
~~4.0~~ 1.0	5.00	5.053	71	95	95	95	8.96	1.031	1.731
~~6.0~~ 2.0	10.01	10.77	71	96	96	96	13.85	.968	2.06
~~8.0~~ 2.0	9.99	10.81	71	98	98	98	13.85	.966	2.06
							Average	.999	1.82

Calculations

ΔH	$\frac{\Delta H}{13.6}$	Y: $\frac{V_w P_b (T_d + 460)}{V_d (P_b + \frac{H}{13.6} (T_w + 460}$	ΔHΘ: $\frac{0.0317 \Delta H}{P_b (T_d + 460)}$	ΔHΘ: $\left[\frac{(T_w + 460)\Theta}{V_w}\right]^2$
0.5	0.0368			
1.0	0.0737			
2.0	0.147			
4.0	0.294			
6.0	0.431			
8.0	0.588			

RAC

DATE MARCH 1, 1978

BOX # 2235

BAROMETRIC PRESSURE P_b 29.52 in. Hg (TIME 1300)

DRY GASMETER # 2235

BY TOM ROONEY

Orifice Manometer Settling H (in. H_2O)	Gas Volume Wet Test Meter V_w (ft^3)	Gas Volume Dry Gas Meter V_d (ft^3)	Temperature: Wet Test Meter T_w (°F)	Temperature: Dry Gas Meter Inlet Td (°F)	Temperature: Dry Gas Meter Outlet T_{do} (°F)	Temperature: Dry Gas Meter Average T_d (°F)	Time θ (min.)	Y	ΔH@
0.5	5.000	4.99	72	90	90	90	12.08	1.03	1.61
~~1.0~~ .5	5.00	5.03	71	95	95	95	12.13	1.04	1.61
~~2.0~~ 1.0	5.05	5.11	71	102	102	102	8.88	1.04	1.67
~~4.0~~ 1.0	5.01	5.13	71	110	110	110	8.90	1.05	1.68
~~6.0~~ 2.0	9.99	10.15	71	110	110	110	12.72	1.05	1.72
~~8.0~~ 2.0	10.00	10.46	71	110	110	110	13.07	1.02	1.81
							Average	1.04	1.68

Calculations

ΔH	$\frac{\Delta H}{13.6}$	Y: $\frac{V_w P_b (T_d + 460)}{V_d (P_b + \frac{H}{13.6} (T_w + 460}$	ΔH@: $\frac{0.0317 \Delta H}{P_b (T_d + 460)} \left[\frac{(T_w + 460)\theta}{V_w}\right]^2$
0.5	0.0368		
1.0	0.0737		
2.0	0.147		
4.0	0.294		
6.0	0.431		
8.0	0.588		

KMC

DATE MARCH 2, 1978

BOX # 2315

BAROMETRIC PRESSURE P_b 29.87 in. Hg

DRY GASMETER # 2315

BY TOM ROONEY

Orifice Manometer Settling H (in. H_2O)	Gas Volume Wet Test Meter V_w (ft^3)	Gas Volume Dry Gas Meter V_d (ft^3)	Temperature: Wet Test Meter T_w (°F)	Temperature: Dry Gas Meter Inlet Td (°F)	Temperature: Dry Gas Meter Outlet T_{do} (°F)	Temperature: Dry Gas Meter Average T_d (°F)	Time θ (min.)	Y	ΔH@
0.5	4.995	5.123	72	90	80	85	13.18	.942	1.92
~~1.0~~ .5	5.00	5.222	72	102	86	94	12.48	1.000	1.70
~~2.0~~ 1.0	5.00	5.298	72	113	82	97.5	9.03	.987	1.76
~~4.0~~ 1.0	5.00	5.318	72	108	94	101	9.06	.989	1.76
~~6.0~~ 2.0	5.00	5.383	72	112	96	104	6.20	.978	1.64
~~8.0~~ 2.0	5.00	5.395	72	112	96	104	6.68	.978	1.90
							Average	.979	1.78

Calculations

ΔH	$\frac{\Delta H}{13.6}$	Y: $\frac{V_w P_b (T_d + 460)}{V_d (P_b + \frac{H}{13.6} (T_w + 460}$	ΔH@: $\frac{0.0317 \Delta H}{P_b (T_d + 460)}$	ΔH@: $\left[\frac{(T_w + 460)\theta}{V_w}\right]^2$
0.5	0.0368			
1.0	0.0737			
2.0	0.147			
4.0	0.294			
6.0	0.431			
8.0	0.588			

DATE 6-22-78 BOX # [illegible]

BAROMETRIC PRESSURE P_b 30.05 in. Hg DRY GASMETER # _____

Orifice Manometer Settling H (in. H_2O)	Gas Volume Wet Test Meter V_w (ft^3)	Gas Volume Dry Gas Meter V_d (ft^3)	Temperature: Wet Test Meter T_w (°F)	Temperature: Dry Gas Meter Inlet Td (°F)	Temperature: Dry Gas Meter Outlet T_{do} (°F)	Temperature: Dry Gas Meter Average T_d (°F)	Time θ (min.)	Y	ΔHθ
0.5	4.380	051.403 055.405	70	94	78		10	1.1277	1.4095
~~1.0~~ .5	4.371	055.405 059.422	70	100	82		10	1.1299	1.4060
~~2.0~~ 1.0	5.375	061.012 066.664	70	110	86		10	0.9985	1.5363
~~4.0~~ 1.0	5.380	066.664 072.354	70	112	90		10	0.9984	1.8331
~~6.0~~ 2.0	3.920	073.665 077.619	70	116	92		5	1.0552	1.2079
~~8.0~~ 2.0	3.934	077.619 081.579	70	112	92		5	1.0520	1.2957
							Average	1.0603	1.6464

Calculations

ΔH	$\frac{\Delta H}{13.6}$	Y: $\frac{V_w P_b (T_d + 460)}{V_d (P_b + \frac{H}{13.6} (T_w + 460)}$	ΔHθ: $\frac{0.0317 \Delta H}{P_b (T_d + 460)} \left[\frac{(T_w + 460)\theta}{V_w}\right]^2$
0.5	0.0368		
1.0	0.0737		
2.0	0.147		
4.0	0.294		
6.0	0.431		
8.0	0.588		

DATE 6/29/79 BOX # RHC. 2315

BAROMETRIC PRESSURE P_b 30.02 in. Hg DRY GASMETER # _____

Orifice Manometer Setting H (in. H_2O)	Gas Volume Wet Test Meter V_w (ft^3)	Gas Volume Dry Gas Meter V_d (ft^3)	Temperature: Wet Test Meter T_w (°F)	Temperature: Dry Gas Meter Inlet Td (°F)	Temperature: Dry Gas Meter Outlet T_{do} (°F)	Temperature: Dry Gas Meter Average T_d (°F)	Time Θ (min.)	Y	ΔHΘ
0.5	4.072	083.202 4.096 087.298	70	87	74	80.5	10	1.0126	1.652
~~1.0~~ .5	4.049	087.248 4.117 091.415	70	82	80	81	10	1.002	1.668
~~2.0~~ 1.0	5.581	094.258 5.737 100.035	70	98	84	91	10	1.008	1.725
~~4.0~~ 1.0	5.563	100.472 5.305 105.777	70	98	86	92	10	1.006	1.733
~~6.0~~ 2.0	3.759	107.764 3.840 111.604	70	104	88	96	5	1.022	1.884
~~8.0~~ 2.0	3.773	111.603 4.017 115.626	70	94	88	91	5	.9717	1.887
							Average	1.003	1.758

Calculations

ΔH	$\frac{\Delta H}{13.6}$	Y: $\frac{V_w P_b (T_d + 460)}{V_d (P_b + \frac{H}{13.6} (T_w + 460}$	ΔHΘ: $\frac{0.0317 \Delta H}{P_b (T_d + 460)}$	ΔHΘ: $\left[\frac{(T_w + 460)\Theta}{V_w}\right]^2$
0.5	0.0368			
1.0	0.0737			
2.0	0.147			
4.0	0.294			
6.0	0.431			
8.0	0.588			

DATE 6-30-78 BOX # 2188 A-1C

BAROMETRIC PRESSURE P_b 30.04 in. Hg DRY GASMETER # _____

Orifice Manometer Settling H (in. H_2O)	Gas Volume Wet Test Meter V_w (ft^3)	Gas Volume Dry Gas Meter V_d (ft^3)	Temperature: Wet Test Meter T_w (°F)	Temperature: Dry Gas Meter Inlet Td (°F)	Temperature: Dry Gas Meter Outlet T_{do} (°F)	Temperature: Dry Gas Meter Average T_d (°F)	Time θ (min.)	Y	ΔHθ
0.5	3.911	844.757 / 848.610	70	84	70		10	1.0251	1.2044
~~1.0~~ .5	4.235	848.610 / 852.615	70	92	76		10	1.1344	1.3851
~~2.0~~ 1.0	5.324	853.665 / 859.230	70	94	84		10	0.9928	1.0906
~~4.0~~ 1.0	5.324	859.235 / 864.611	70	100	86		10	0.9829	1.0911
~~6.0~~ 2.0	3.574	866.801 / 870.599	70	102	90		5	0.9824	2.0969
~~8.0~~ 2.0	4.248	870.599 / 874.599	70	102	90		5	1.0801	1.3472
							Average	1.0435	1.7351

Calculations

ΔH	$\frac{\Delta H}{13.6}$	Y: $\frac{V_w P_b (T_d + 460)}{V_d (P_b + \frac{H}{13.6} (T_w + 460}$	ΔHθ: $\frac{0.0317 \Delta H}{P_b (T_d + 460)}$	ΔHθ: $\left[\frac{(T_w + 460)\theta}{V_w}\right]^2$
0.5	0.0368			
1.0	0.0737			
2.0	0.147			
4.0	0.294			
6.0	0.431			
8.0	0.588			

DATE 6-30-78

BOX # RAC 2235

BAROMETRIC PRESSURE P_b 30.04 in. Hg

DRY GASMETER # _____

Orifice Manometer Setting H (in. H_2O)	Gas Volume Wet Test Meter V_w (ft^3)	Gas Volume Dry Gas Meter V_d (ft^3)	Temperature: Wet Test Meter T_w (°F)	Temperature: Dry Gas Meter Inlet Td (°F)	Temperature: Dry Gas Meter Outlet T_{do} (°F)	Temperature: Dry Gas Meter Average T_d (°F)	Time θ (min.)	Y	ΔHθ
0.5	4.320	897.629 901.684	70	80	72		10	1.0261	1.0216
~~1.0~~ .5	4.297	901.684 905.747	70	90	78		10	1.0235	1.4776
~~2.0~~ 1.0	5.621	906.801 912.405	70	78	70		10	1.0291	1.7569
~~4.0~~ 1.0	5.591	912.405 918.015	70	90	74		10	1.0221	1.7310
~~6.0~~ 2.0	5.820	919.375 925.249	70	104	80		5	1.0215	1.5470
~~8.0~~ 2.0	5.816	923.247 927.160	70	106	84		5	1.0165	1.9339
							Average	1.0380	1.6965

Calculations

ΔH	$\frac{\Delta H}{13.6}$	Y: $\frac{V_w P_b (T_d + 460)}{V_d (P_b + \frac{H}{13.6} (T_w + 460)}$	ΔHθ: $\frac{0.0317 \Delta H}{P_b (T_d + 460)}$	ΔHθ: $\frac{(T_w + 460)\theta}{V_w}$ ^{2}
0.5	0.0368			
1.0	0.0737			
2.0	0.147			
4.0	0.294			
6.0	0.431			
8.0	0.588			

DATE _____ BOX # _____

BAROMETRIC PRESSURE P_b 30.27 in. Hg DRY GASMETER # _____

Orifice Manometer Settling H (in. H_2O)	Gas Volume Wet Test Meter V_w (ft^3)	Gas Volume Dry Gas Meter V_d (ft^3)	Temperature: Wet Test Meter T_w (°F)	Temperature: Dry Gas Meter Inlet Td (°F)	Temperature: Dry Gas Meter Outlet T_{do} (°F)	Temperature: Dry Gas Meter Average T_d (°F)	Time θ (min.)	γ	Δ H@
0.5	0 2.995	319.262 323.412	72	84	80	[illegible]	10	[illegible]	[illegible]
~~1.0~~ [illegible]	3.960	323.412 327.605	72	90	84	[illegible]	10	[illegible]	[illegible]
~~2.0~~ [illegible]	4.670	329.557 334.743	72	98	88	93	10	[illegible]	[illegible]
~~4.0~~ [illegible]	5.240	334.743 340.031	72	90	88	[illegible]	10	[illegible]	[illegible]
~~6.0~~ [illegible]	3.605	341.531 345.301	72	98	92	95	5	[illegible]	[illegible]
~~8.0~~ [illegible]	3.620	345.301 349.113	72	76	90	[illegible]	5	[illegible]	[illegible]
							Average	[illegible]	[illegible]

Calculations

ΔH	$\frac{\Delta H}{13.6}$	γ: $\frac{V_w P_b (T_d + 460)}{V_d (P_b + \frac{H}{13.6} (T_w + 460)}$	ΔH@: $\frac{0.0317 \Delta H}{P_b (T_d + 460)}$	ΔH@: $\left[\frac{(T_w + 460)\theta}{V_w}\right]^2$
0.5	0.0368			
1.0	0.0737			
2.0	0.147			
4.0	0.294			
6.0	0.431			
8.0	0.588			

DATE 6-30-78

BOX # RAC 2235

BAROMETRIC PRESSURE P_b 30.04 in. Hg

DRY GASMETER # _____

Orifice Manometer Settling H (in. H_2O)	Gas Volume Wet Test Meter V_w (ft^3)	Gas Volume Dry Gas Meter V_d (ft^3)	Temperature: Wet Test Meter T_w (°F)	Temperature: Dry Gas Meter Inlet Td (°F)	Temperature: Dry Gas Meter Outlet T_{do} (°F)	Temperature: Dry Gas Meter Average T_d (°F)	Time θ (min.)	Y	ΔHθ
0.5	4.320	897.629 901.684	70	80	72		10	1.0261	1.48166
~~1.0~~ .5	4.294	901.684 905.747	70	90	78		10	1.0835	1.4776
~~2.0~~ 1.0	5.621	906.801 912.405	70	78	70		10	1.0081	1.7569
~~4.0~~ 1.0	5.591	912.405 918.015	70	90	74		10	1.0221	1.7310
~~6.0~~ 2.0	3.820	919.373 923.249	70	104	80		5	1.0215	1.5400
~~8.0~~ 2.0	3.816	923.249 927.160	70	106	84		5	1.0168	1.8339
							Average	1.0390	1.6965

Calculations

ΔH	$\frac{\Delta H}{13.6}$	Y: $\frac{V_w P_b (T_d + 460)}{V_d (P_b + \frac{H}{13.6} (T_w + 460}$	ΔHθ: $\frac{0.0317 \Delta H}{P_b (T_d + 460)}$	ΔHθ: $\boxed{\frac{(T_w + 460)\theta}{V_w}}^2$
0.5	0.0368			
1.0	0.0737			
2.0	0.147			
4.0	0.294			
6.0	0.431			
8.0	0.588			

9-16

DATE 11/27/78 BOX # 2188

BAROMETRIC PRESSURE P_b 30.21 in. Hg DRY GASMETER # _____

Ricky Kelly

Orifice Manometer Settling H (in. H_2O)	Gas Volume Wet Test Meter V_w (ft^3)	Gas Volume Dry Gas Meter V_d (ft^3)	Temperature: Wet Test Meter T_w (°F)	Temperature: Dry Gas Meter Inlet Td (°F)	Temperature: Dry Gas Meter Outlet T_{do} (°F)	Temperature: Dry Gas Meter Average T_d (°F)	Time θ (min.)	Y	ΔH@
0.5	0 4.270	606.156 610.034	71	82	72	77	10	[illegible]	1.505
~~1.0~~ 0.5	0 3.272	610.034 613.408	70	92	78	85	10		[illegible]
~~2.0~~ 1.0	0 5.973	613.408 619.905	71	96	84	90	10		
~~4.0~~ 1.0	5.330	619.905 625.491	70	100	86	94	10		
~~6.0~~ 2.0	3.899	625.491 629.856	70	102	88	95	5		
~~8.0~~ 2.0	4.631	629.856 634.425	70	104	90	97	5		
							Average	[illegible]	1.794

Calculations

ΔH	$\frac{\Delta H}{13.6}$	Y: $\frac{V_w P_b (T_d + 460)}{V_d (P_b + \frac{H}{13.6} (T_w + 460}$	ΔH@: $\frac{0.0317 \Delta H}{P_b (T_d + 460)} \left[\frac{(T_w + 460)\theta}{V_w}\right]^2$
0.5	0.0368		
1.0	0.0737		
2.0	0.147		
4.0	0.294		
6.0	0.431		
8.0	0.588		

APPENDIX B

SAMPLE CALCULATIONS

Nomenclature

P_b	Barometric Pressure, mm. Hg.
P_m	Average Orifice Pressure Drop, mm. H_2O
T_m	Average Dry Gas Meter Temperature, °C
V_m	Volume of Dry Gas Sampled at Meter Conditions, Am^3
$V_{m_{std}}$	Volume of Dry Gas Sampled at Standard Conditions(1), Nm^3
V_w	Total H_2O Collected in Impingers and Silica Gel, ml
$V_{w_{std}}$	Volume of Water Vapor Collected at Standard Conditions(1), Nm^3
%M	Percent Moisture in Stack Gas, by Volume
M_d	Mole Fraction Dry Stack Gas
$\%CO_2$	Percent CO_2 by volume, dry
$\%O_2$	Percent O_2 by volume, dry
%CO	Percent CO by volume, dry
$\%N_2$	Percent N_2 by volume, dry
MW_d	Molecular Weight of Dry Stack Gas, gm/gm-mole
MW	Molecular Weight of Wet Stack Gas, gm/gm-mole
MW_c	Molecular Weight of Chemical
C_p	Pitot Tube Coefficient
P_s	Stack Gas Pressure, mm. Hg., absolute
PPM	Parts per million
T_s	Stack Gas Temperature, °C
$\bar{T}_s$	Average Stack Gas Temperature, °C
ΔP_s	Velocity head, mm. H_2O
V_s	Average Stack Gas Velocity, Stack Conditions, Am/s
A_s	Stack Area, m^2
Q_s	Stack Gas Flow Rate at Standard Conditions(1), dry Nm^3/min.

Q_a Stack gas flow rate at stack conditions, Am^3/min.

T_t Net ime of test, min.

D_n Sampling nozzle diameter, mm.

%I Percent isokinetic

m_f Particulate collected in probe, cyclone and filter, mg.

m_t Total particulate collected, mg.

I_c Percent of particulate caught in impingers

C_{sf} Particulate concentrations at standard conditions[1], dry, based on probe, cyclone and filter catch, mg/Nm^3

C_{st} Particulate concentration at standard conditions[1], dry, based on total catch, mg/Nm^3

C_{af} Particulate concentration at stack conditions, based on probe, cyclone and filter catch, mg/Am^3

C_{at} Particulate concentration at stack conditions, based on total catch, mg/Am^3

E_f Particulate emission rate, based on probe, cyclone and filter catch, kg/hr.

E_t Particulate emission rate; based on total particulate catch, kg/hr.

P_u Unit process rate, _____

_____

PE_f Particulate emission rate on a process basis, probe, cyclone and filter catch, kg/_____

PE_t Particulate emission rate on a process basis, total catch kg/_____

%EA Percent excess air in stack gas

6. Molecular weight of wet stack gas

$$MW = MW_d \times M_d + 18(1-M_d) = \text{gm/gm-mole}$$

7. Stack gas velocity at stack conditions[2]

$$V_s = 34.97 \times C_p \times \sqrt{\Delta P_s \times (T_s + 273)} \; \frac{1}{P_s \times MW}^{\frac{1}{2}} = \text{Am/sec.}$$

8. Stack gas volumetric flow rate at standard conditions [1], dry

$$Q_s = \frac{2.325 \times V_s \times A_s \times M_d \times P_s}{} = \text{Nm}^3\text{/min.}$$

9. Stack gas volumetric flow rate at stack conditions

$$Q_a = \frac{2.59 \times Q_s \; (\bar{T}_s + 273)}{P_s \times M_d} = \text{Am}^3\text{/min.}$$

10. Percent isokinetic

$$\%I = \frac{54{,}120 \times (\bar{T}_s + 273) \times V_{m_{std}}}{V_s \times T_t \times P_s \times M_d \times (D_n)^2} = \%$$

11. Particulate concentration at standard conditions[1], dry, based on probe, cyclone and filter catch

$$C_{sf} = \frac{m_f}{V_{m_{std}}} = \text{mg/Nm}^3$$

12. Particulate concentration at standard conditions [1], dry, based on total catch

$$C_{st} = \frac{m_t}{V_{m_{std}}} = mg/Nm^3$$

13. Particulate concentration at stack conditions, based on probe, cyclone, and filter catch

$$C_{af} = \frac{0.3855 \times C_{sf} \times P_s \times M_d}{} = mg/Am^3$$

14. Particulate concentration at stack conditions, based on total catch

$$C_{at} = \frac{0.3855 \times C_{sf} \times P_s \times M_d}{\bar{T}_s + 273)} = mg/Am^3$$

15. Particulate emission rate, based on probe, cyclone, and filter catch

$$E_f = 1{,}000{,}000 \times C_{sf} \times Q_s = kg/hr.$$

16. Particulate emission rate, based on total catch

$$E_t = 1{,}000{,}000 \times C_{st} \times Q_s = kg/hr.$$

17. Particulate emission rate on a process basis, probe, cyclone, and filter catch

$$PF_f = \frac{E_f}{P_u}$$

18. Particulate emission rate on a process basis, total catch

$$PE_t = \frac{E_t}{P_u}$$

19. Particulate emission rate, part per million

$$PPM = \frac{M_t}{V_{m_{std(NM^3)}}} \times \frac{22,0226}{MW_{(c)}}$$

---

(1) Standard conditions: 20 C, 760 mm. Hg.

(2) $\sqrt{\Delta P_s \times (T_s + 273)}$ is determined by averaging the square root of the product of the velocity head (ΔP_s) and the absolute stack temperature (T_s + 273) at each sampling point.

APPENDIX C

DAILY ACTIVITY LOG

DAILY ACTIVITY LOG

Monday, October 30

All TRW personnel traveled to Salt Lake City, Utah.

Tuesday, October 31

All TRW personnel proceeded to Kennecott copper smelter located in Magma, Utah. TRW personnel met with plant officials and then proceeded to set up and prepare for Test 1 at matte tapping and slag tapping.

Wednesday, November 1

TRW personnel perform Test 1. After the first test, samples were recovered and the sampling trains were prepared for Test 2.

Thursday, November 2

Sampling crew performed Test 2. After sampling, the samples were recovered and the sampling trains were prepared for Test 3.

Friday, November 3

Test 3 completed at matte tapping fugitive emission system and slag tapping fugitive emission system. Samples were recovered and sampling equipment was relocated to acid plant inlet and converter fugitive emission system. All equipment secured and TRW personnel leave the site at 6 pm.

Monday, November 6

TRW personnel prepared sampling trains at the converter fugitive emission system and the acid plant inlet duct for Test 1. Due to process operation, TRW started Test 1 and completed the first half of Test 1.

Tuesday, November 7

TRW personnel completed Test 1 and prepared sampling trains for Test 2.

DAILY ACTIVITY LOG

Wednesday, November 8

TRW sampling crew performed Test 2 and recovered samples. Due to production, TRW completed the testing on the first half of Test 3.

Thursday, November 9

TRW completed Test 3 and recovered samples. TRW personnel prepared concentrate dryer test position for sampling. Due to impending snow storm prediction, TRW secured equipment and left the site at 6 pm.

Friday, November 10

TRW personnel proceeded to California.

Monday, November 11

TRW personnel returned to the plant and prepared equipment for testing at the converter fugitive emission duct.

Tuesday, November 12

TRW personnel performed three two hour tests during the operation of the concentrate dryer.

Wednesday, November 13

All samples were recovered, sampling equipment packed into mobile laboratory and TRW left Kennecott copper at Magna, Utah. TRW personnel returned to California with mobile environmental unit.

UNITED STATES ENVIRONMENTAL PROTECTION AGENCY
Office of Air Quality Planning and Standards
Research Triangle Park, North Carolina 27711

DATE: 11/7/79

SUBJECT: Source Test Report

FROM: J. E. McCarley, Chief, Field Testing Section,
Emission Measurement Branch, ESED (MD-13)

TO: See Below

The enclosed final source test report is submitted for your information. Any questions regarding the test should be directed to the Project Officer (telephone: 8/629-5243). Additional copies of this report are available from the ERC Library, Research Triangle Park, North Carolina 27711.

Industry: Non-ferrous Smelter

Process: Primary Copper

Company: Kennecott Copper Corporation

Location: Magna, Utah

Project Report Number: 78-CUS-13

Project Officer: Frank Clay

Enclosure

Addressees:
John Nader, ESRL (MD-46)
Arch MacQueen, MDAD (MD-14)
Rodney Midgett, EMSL (MD-77)
Frank Biros, DSSE (MD-EN-341)
Director, Air & Hazardous Materials Division, Region VIII
(copy enclosed for State agency)
Bob Kilgore, EPA Library Services (MD-35)