Note: This is a reference cited in *AP 42, Compilation of Air Pollutant Emission Factors, Volume I Stationary Point and Area Sources.* AP42 is located on the EPA web site at www.epa.gov/ttn/chief/ap42/

The file name refers to the reference number, the AP42 chapter and section. The file name "ref02_c01s02.pdf" would mean the reference is from AP42 chapter 1 section 2. The reference may be from a previous version of the section and no longer cited. The primary source should always be checked.

United States
Environmental Protection
Agency

Office of Air Quality
Planning and Standards
Research Triangle Park NC 27711

EMB Report 78-CUS-12
April 1979

Air

EPA

Arsenic
Non-Ferrous Smelter

PRIMARY COPPER
SMELTING 12.3
AP-42 Section ~~7.3~~
Reference Number
~~16~~ 17

Emission Test Repor
ASARCO
Tacoma, Washingtor

AP-42
5th ed.
Section 12.3
#17

EMISSION TESTING OF ASARCO COPPER SMELTER
TACOMA, WASHINGTON

TO

U.S. ENVIRONMENTAL PROTECTION AGENCY

Contract # 68-02-2812
Work Assignment # 25

January 18, 1980

TRW
ENVIRONMENTAL ENGINEERING DIVISION
One Space Park, Redondo Beach, CA 90278

CONTENTS

	Page
Figures	ii
Tables	iii
1. Introduction	1
2. Summary and Discussion of Results	2
3. Process Description	16
4. Location of Sampling Points	17
5. Sampling and Analytical Procedures	30
Appendices	
A. Field and Analytical Data	35
1. Traverse point locations	36
2. Field data sheets	46
3. Analytical data sheets	85
4. Meter box calibration data	151
B. Sample Calculations	162
C. Daily Activity Log	170

FIGURES

Number		Page
1	Roaster baghouse inlet duct	20
2	Roaster baghouse outlet duct	21
3	Reverberatory furnace electrostatic precipitator outlet	22
4	Matte tapping duct	23
5	Slag tapping duct	24
6	Calcine discharge duct	25
7	Arsenic kitchen inlet to arsenic baghouse	26
8	Metallic arsenic inlet to arsenic baghouse	27
9	Arsenic baghouse outlet duct	28
10	Converter slag return duct	29
11	Arsenic/sulfur dioxide sampling train	33
12	Modified EPA sampling train	34

TABLES

Number		Page
1	Roaster Baghouse Inlet Arsenic/SO_2 Results	4
2	Roaster Baghouse Outlet Arsenic/SO_2 Results	5
3	Reverberatory Furnace ESP Oulet Arsenic/SO_2 Results	6
4	Matte Tapping Arsenic/SO_2 Results	7
5	Slag Tapping Arsenic/SO_2 Results	8
6	Calcine Discharge Arsenic/SO_2 Results	9
7	Arsenic Kitchen Arsenic/SO_2 Results	10
8	Metallic Arsenic Asenic/SO_2 Results	11
9	Arsenic Baghouse Arsenic/SO_2 Results	12
10	Converter Slag Return Arsenic/SO_2 Results	13
11	Process Sample Analysis Results	14
12	Asarco Secondary Standard Analysis Results	15

SECTION 1

INTRODUCTION

The Asarco Copper Smelter in Tacoma, Washington processes ores of high arsenic content, and has the only arsenic production facility in the United States. The hazardous nature of this material has caused Asarco to install highly efficient control devices for processes emitting arsenic rich dusts.

From September 12 through September 25, 1978 a test team from TRW performed emission testing on several control devices and fugitive emissions gas streams. The control device sampling locations included the inlet and outlet of the roaster baghouse, the inlets and outlet of the arsenic kitchen baghouse, and the outlet of the reverberatory furnace electrostatic precipitator. The fugitive emission system sampling locations included the matte tapping, slag tapping, converter slag return and calcine emissions ducts.

The samples taken were analyzed for arsenic and sulfur dioxide. This data will be used to support the EPA in establishing performance standards for the copper industry.

This report presents the results of the sampling and analysis effort at the Tacoma Copper Smelter. The following sections of the report contain a summary of the results, descriptions of the sampling locations, descriptions of the sampling and analysis procedures, and appendices containing field and laboratory data and example calculations.

SECTION 2

SUMMARY AND DISCUSSION OF RESULTS

The results of the sampling and analysis program are summarized in Tables 1-10. Three sets of tests were performed at each sampling location. The results of these tests and the average values for the three test are given in the Tables.

Tables 1 and 2 give the results of the inlet and outlet tests at the roaster baghouse. The inlet and outlet tests were done simultaneously during normal operating periods of the roaster. The only difficulty encountered during these tests was the plugging of the inlet location nozzle several times during these runs. The material plugging the nozzle was recovered into the probe rinse container and the test was continued.

Table 3 presents the results of the tests done at the outlet from the reverberatory furnace electrostatic precipitator. This location required vertical sampling with a 15 foot probe and a teflon flex line between the probe and the filter (see diagram #2). The duct had a significant amount of sediment in the bottom which precluded sampling at several traverse points. Since the plant was on curtailed production due to meteorological conditions some delay was encountered in completing these tests.

The data from tests done at the matte tapping, slag tapping, calcine discharge, and converter slag return are given in Tables 4, 5, 6, and 10, respectively. The activities feeding these fugitive systems occur for short periods throughout the converter cycle, and consequently sampling had to be timed to coincide with this intermittant schedule. Matte and slag tapping fugitive emissions were sampled over 5 to 8 minute periods when either matte or slag was being drawn from the reverberatory furnace. Sampling at these locations was coordinated by EPA observers with transceluers who alerted the sampling teams as to when to start and stop sampling trains.

During the Data Reduction, the meter volume was back calculated to account for sulfur dioxide that was removed by the three 10% hydrogen peroxide impingers. The back calculation for sulfur dioxide was accomplished in the following order. First, parts per million sulfur dioxide at standard conditions was calculated. Then parts per million was converted to a fraction by dividing by 10^6. This number was added to one and the result multiplied by the volume of gas collected through the dry gas meter at standard conditions. The result of multiplication yielded the true gas volume collected at standard conditions. Since SO_2 removal by the peroxide impingers does not reach the dry gas meter, corrected values for dry gas meter volumes (at meter conditions) found on the summary sheets will be slightly higher than those obtained from the field data sheets.

Although matte and slag are tapped from the same furnace, the fugitive emissions from these processes were quite different. The amount of arsenic and sulfur dioxide in the fugitive emissions from the matte tapping process were considerably higher than the emissions of these constituents from the slag tapping process. Arsenic emissions were 11.6 times higher and sulfur dioxide emissions were 5.7 times higher (see tables 4 and 5).

Sampling of the calcine discharge ducts was done as the larry cars were filled. The concentration of arsenic in these emissions was similar to that of the roaster outlet, but volumetric flow of gas through the duct was much smaller, and consequently so was the mass emission rate from this source.

The emissions from the ocnverter slag return were sampled during 1 to 3 minute intervals when slag was returned to the reverberatory furnace from the converters. This procedure only occurred five to six times per day, so that three days of testing were required to collect a large enough sample for analysis.

At the matte tapping location, taps were of short duration and only one point was sampled per tap, since the time for each tap varied, the sample time for the points varied also.

Tables 7, 8 and 9 summarize the data from testing at the arsenic plant. Tests at these locations were done simultaneously. Tables 7 and 8 give data from the two inlets to the arsenic baghouse (arsenic kitchen and metallic arsenic, respectively). This data indicates the very high concentrations of arsenic, entering the baghouse (averaging 506 ppm from the arsenic kitchen, and 649 ppm from the metallic arsenic area). The data from the second metallic arsenic test on September 24, 1978 indicated that the process may not have been operating during the test. This is based on the low arsenic level found at the metallic arsenic inlet location and a correspondingly low arsenic concentration at the baghouse outlet for this test. Consequently, the average concentration and mass emission rate for the metallic arsenic inlet and baghouse outlet should be based on the first and third tests rather than all three tests.

Table 11 and Table 12 presents the process data results. Table 11 is the summary of all the process samples collected. Table 12 presents a comparison of the analytical results between Asarco Laboratory personnel and TRW laboratory personnel through the use of selected samples. These replicated samples were prepared by Asarco personnel utilizing pulverizing equipment and a sample splitter.

TABLE 1 ROASTER BAGHOUSE INLET ARSENIC/SO_2 RESULTS

RUN NUMBER	1		2		3		AVERAGE	
	ENGLISH UNITS	METRIC UNITS	ENGLISH UNITS	METRIC UNITS	ENGLISH UNITS	METRIC UNITS	ENGLISH UNITS	METRIC UNITS
I DATE	9/15/78	9/15/78	9/15/78	9/15/78	9/16/78	9/16/78		
II STACK PARAMETERS								
Pst - Static Pressure, "Hg (mmHg)	.15	3.92	-.01	-.24	.15	3.92	.10	2.53
Ps - Stack Gas Pressure, "Hg Absolute (mmHg)	29.93	760.22	30.20	767.08	30.33	770.38	30.15	765.89
% CO_2 - Volume % Dry	.2	.2	.2	.2	.2	.2	.2	.2
% O_2 - Volume % Dry	20.4	20.4	20.4	20.4	20.4	20.4	20.4	20.4
SO_2 - Volume % Dry	.65	.65	.96	.96	.81	.81	.81	.81
% N_2 - Volume % Dry	78.75	78.75	78.44	78.44	78.59	78.59	78.59	78.59
Ts - Average Stack Temperature °F (°C)	201.4	94.1	184.9	84.9	203.4	95.2	196.6	91.4
% H_2O - % Moisture In Stack Gas, By Volume	4.4	4.4	3.4	3.4	4.5	4.5	4.1	4.1
As - Stack Area, ft^2 (m^2)	57.	5.3	57.	4.3	57.	5.3	57.	5.3
MD - Molecular Weight of Stack Gas, Dry Basis	29.08	29.08	29.19	29.19	29.15	29.15	29.14	29.14
Ms - Molecular Weight of Stack Gas, Wet Basis	28.59	28.59	28.81	28.81	28.64	28.64	28.68	28.68
Vs - Stack Gas Velocity, ft/sec, (m/sec)	66.22	20.18	64.20	19.57	69.88	21.30	66.77	20.35
QA - Stack Gas Volumetric Flow at Stack Conditions, ACFM (Nm^3/min)	226472.4	6415.6	219564.0	6219.9	238989.6	6770.2	228342.0	6468.6
Qs - Stack Gas Volumetric Flow at Standard Conditions, DSCFM (Nm^3/min)	173620.6	4918.4	175277.1	4965.4	184141.5	5216.5	177679.7	5033.4
% A - Percent Excess Air	4.7	4.7	4.7	4.7	4.7	4.7	4.7	4.7
III TEST CONDITIONS								
PB - Barometric Pressure, "Hg (mmHg)	29.78	756.41	30.21	767.33	30.18	766.57	30.06	763.44
DN - Sampling Nozzle Diameter, in. (mm)	.187	4.75	.187	4.75	.187	4.75	.187	4.75
T - Sampling Time, min	80.	80.	84.	84.	80.	80.	81.3	81.3
Vm - Sample Volume, ACF (m^3)	45.80	1.30	54.32	1.54	47.11	1.33	49.08	1.39
Np - Net Sampling Points	21.	21.	20.	20.	20.	20.	20.3	20.3
Cp - Pitot Tube Coefficient	.84	.84	.84	.84	.84	.84	.84	.84
Tm - Average Meter Temperature °F (°C)	93.5	34.2	86.5	30.3	79.8	26.6	86.6	30.4
Pm - Average Orifice Pressure Drop, "H_2O (mmH_2O)	.96	24.38	.92	23.37	1.60	40.64	1.16	29.46
VLC - Condensate Collected (Impingers and Gel), mls	42.	42.	39.3	39.3	46.3	46.3	42.5	42.5
ΔP - Stack Velocity Head "H_2O (mmH_2O)	1.10	27.94	1.07	27.18	1.24	31.50	1.14	28.87
IV TEST CALCULATIONS								
Vw - Condensed Water Vapor, SDCF (Nm^3)	1.98	.06	1.85	.05	2.18	.06	2.00	.06
Vm - Volume of Gas Sampled at Standard Conditions, DSCF (Nm^3)	43.57	1.23	53.09	1.50	46.64	1.32	47.77	1.35
% H_2O - Percent Moisture, By Volume	4.4	4.4	3.4	3.4	4.5	4.5	4.1	4.1
Ms - Molecular Weight of Stack Gas, Wet Basis	28.59	28.59	28.81	28.81	28.64	28.64	28.68	28.68
Vs - Stack Velocity, ft/sec (m/sec)	66.22	20.18	64.20	19.57	69.88	21.30	66.77	20.35
% I - Percent Isokinetic	94.6	94.6	108.2	108.2	95.	95.	99.3	99.3
V ANALYTICAL DATA								
A) Arsenic Front Half								
Probe (mg)		383.50		404.60		304.20		363.93
Cyclone (mg)		—		—		—		—
Filter (mg)		4.30		36.		28.50		22.93
Arsenic Front Half Total (mg)		387.30		440.60		332.70		386.87
ppm, (mg/m^3)	100.5066	313.7868	93.8353	292.9587	80.6545	251.8077	91.6655	286.1844
#/hr, (kg/hr)	203.9654	92.5853	192.2438	87.2645	173.5966	78.8001	189.9353	86.2167
B) Arsenic - Impinger Collection								
Impinger #1, 2 (mg)		.60		4.20		3.113		2.64
ppm, (mg/m^3)	.1557	.4861	.8945	2.7926	.7588	2.3690	.6030	1.8826
#/hr, (kg/hr)	.3160	.1434	1.8326	.8318	1.6243	.7373	1.2576	.5709
Impinger #3,4,5 (mg)		—		—		—		—
ppm, mg/m^3)	—	—	—	—	—	—	—	—
#/hr, (kg/hr)	—	—	—	—	—	—	—	—
C) Arsenic - Impinger Total (mg)		.60		4.20		3.113		2.64
ppm, (mg/m^3)	.1557	.4861	.8945	2.7926	.7588	2.3690	.6030	1.8826
#/hr, (kg/hr)	.3160	.1434	1.8326	.8318	1.6243	.7373	1.2576	.5709
D) Total Arsenic (mg)		387.90		444.80		335.83		389.51
ppm, (mg/m^3)	100.6623	314.2729	94.7298	295.7514	81.4133	254.1767	92.2685	288.0670
#/hr, (kg/hr)	204.2814	92.7287	194.0764	88.0964	175.2210	79.5374	191.1929	86.7875
E) Total SO_2 (mg)		21517.18		38448.8		28572.5		29512.83
ppm		6543.5537		9595.9051		8117.1875		8085.5488
(mg/m^3)		17433.015		25564.940		21625.413		21541.122
#/hr, (kg/hr)	11331.6837	5143.7511	16776.0859	7615.1094	14908.5969	6767.4067	14338.7883	6508.7557

Table 2

Roaster Baghouse Outlet

RUN NUMBER	1		2		3		4	
	ENGLISH UNITS	METRIC UNITS	ENGLISH UNITS	METRIC UNITS	ENGLISH UNITS	METRIC UNITS	ENGLISH UNITS	METRIC UNITS
I DATE	9/15/78	9/15/78	9/15/78	9/15/78	9/16/78	9/16/78		
II STACK PARAMETERS								
P_{ST} - STATIC PRESSURE, "HG (MMHG)	-0.147	-3.74	-0.147	-3.74	-0.147	-3.74	-0.147	-3.74
P_S - STACK GAS PRESSURE, "HG ABSOLUTE (MMHG)	29.63	752.68	30.06	763.60	30.03	762.84	29.91	759.71
% CO_2 - VOLUME % DRY	0.2	0.2	0.2	0.2	0.2	0.2	0.2	0.2
% O_2 - VOLUME % DRY	20.4	20.4	20.4	20.4	20.4	20.4	20.4	20.4
% CO - VOLUME % DRY	0.70	0.70	0.80	0.80	0.52	0.52	0.67	0.67
% N_2 - VOLUME % DRY	78.70	78.70	78.60	78.60	78.88	78.88	78.73	78.73
T_S - AVERAGE STACK TEMPERATURE °F (°C)	191	88	189	87	180	82	187	86
% H_2O - % MOISTURE IN STACK GAS, BY VOLUME	5.95	5.9	5.0	5.0	5.6	5.6	5.5	5.5
A_S - STACK AREA, FT^2 (M^2)	44.18	4.10	44.18	4.10	44.18	4.10	44.18	4.10
M_D - MOLECULAR WEIGHT OF STACK GAS, DRY BASIS	29.10	29.10	29.14	29.14	29.04	29.04	29.09	29.09
M_S - MOLECULAR WEIGHT OF STACK GAS, WET BASIS	28.45	28.45	28.58	28.58	28.42	28.42	28.48	28.48
V_S - STACK GAS VELOCITY, FT/SEC, (M/SEC)	85.79	26.15	84.85	25.86	86.30	26.30	85.65	26.10
Q_A - STACK GAS VOLUMETRIC FLOW AT STACK CONDITIONS, ACFM (NM^3/MIN)	227002	6429	224518	6359	228348	6467	226622	6418
Q_S - STACK GAS VOLUMETRIC FLOW AT STANDARD CONDITIONS, DSCFM (NM^3/MIN)	171887	4868	174633	4946	178671	5060	175064	4958
% EA - PERCENT EXCESS AIR	4.7	4.7	4.7	4.7	4.7	4.7	4.7	4.7
III TEST CONDITIONS								
P_B - BAROMETRIC PRESSURE, "HG (MMHG)	29.78	756.41	30.21	767.33	30.18	766.57	30.06	763.44
D_N - SAMPLING NOZZLE DIAMETER, IN. (MM)	0.185	4.10	0.1875	4.76	0.185	4.70	0.186	4.72
T - SAMPLING TIME, MIN	120	120	120	120	120	120	120	120
V_M - SAMPLE VOLUME, ACF (M^3)	91.47	2.59	95.98	2.72	95.87	2.72	94.44	2.68
N_P - NET SAMPLING POINTS	12	12	12	12	12	12	12	12
C_P - PITOT TUBE COEFFICIENT	0.84	0.84	0.84	0.84	0.84	0.84	0.84	0.84
T_M - AVERAGE METER TEMPERATURE °F (°C)	88	31	95	35	84	29	89	32
P_M - AVERAGE ORIFICE PRESSURE DROP, "H_2O (MMH_2O)	2.04	51.82	2.195	55.75	2.30	58.42	2.18	55.33
V_{LC} - CONDENSATE COLLECTED (IMPINGERS AND GEL), MLS		120.3		106.8		122.2		116.4
ΔP - STACK VELOCITY HEAD "H_2O (MMH_2O)	1.847	46.914	1.847	46.914	1.924	48.87	1.873	47.57
IV TEST CALCULATIONS								
V_W - CONDENSED WATER VAPOR, SDCF (NM^3)	5.39	0.15	4.82	0.14	5.38	0.152	5.20	0.14
V_M - VOLUME OF GAS SAMPLED AT STANDARD CONDITIONS, DSCF (NM^3)	88.182	2.50	92.651	2.624	94.283	2.67	91.705	2.60
% H_2O - PERCENT MOISTURE, BY VOLUME	5.9	5.9	5.0	5.0	5.6	5.6	5.5	5.5
M_S - MOLECULAR WEIGHT OF STACK GAS, WET BASIS	28.45	28.45	28.58	28.58	28.42	28.42	28.48	28.48
V_S - STACK VELOCITY, FT/SEC (M/SEC)	85.79	26.15	84.85	25.86	86.30	26.30	85.65	26.10
% I - PERCENT ISOKINETIC	99.47	99.47	100.1	100.1	102.3	102.3	100.6	100.6
V ANALYTICAL DATA								
A) ARSENIC FRONT HALF								
PROBE (MG)	---	0.960	---	0.985	---	[illegible]	---	1.14
CYCLONE (MG)	---	---	---	---	---	---	---	---
FILTER (MG)	---	0.575	---	0.625	---	0.275	---	0.492
ARSENIC FRONT HALF TOTAL (MG)	---	1.535	---	1.610	---	1.750	---	1.632
GRS/SDCF, (MG/M^3)	0.268	0.6.15	0.268	0.614	0.286	0.655	0.274	0.628
#/HR, KG/HR)	0.396	0.180	0.401	0.182	0.439	0.199	0.412	0.187
B) ARSENIC BACK HALF (MG)	---	0.08	---	0.105	---	2.210	---	0.798
GRS/SDCF, (MG/M^3)	0.014	0.032	0.017	0.040	0.361	0.828	0.131	0.300
#/HR, (KG/HR)	0.021	0.009	0.026	0.012	0.554	0.251	0.200	0.091
TOTAL ARSENIC (MG)	---	1.615	---	1.715	---	3.961	---	2.43
GRS/SDCF, (MG/M^3)	0.282	0.647	0.285	0.654	0.647	1.483	0.405	0.928
#/HR, (KG/HR)	0.416	0.189	0.428	0.194	0.993	0.450	0.612	0.278
C) TOTAL SO_2 (MG)	---	46687.3	---	55568.7	---	36943.07	---	46399.7
PPM	7029.2	7029.2	7962.8	7962.8	5202.2	5202.2	6731.4	6731.4
(MG/M^3)	8158.7	18694.6	15850.6	21177.6	23901.5	13835.6	15970.3	17902.6
#/HR, (KG/HR	12037.7	5460.2	13854.4	6284.4	9260.5	4200.6	11717.5	5315.0

Table 3

ESP Outlet

RUN NUMBER	1		2		3		4	
	ENGLISH UNITS	METRIC UNITS	ENGLISH UNITS	METRIC UNITS	ENGLISH UNITS	METRIC UNITS	ENGLISH UNITS	METRIC UNITS
I DATE	9/15/78	9/15/78						
II STACK PARAMETERS								
PST - STATIC PRESSURE, "HG (MMHG)	0.096	2.43	0.096	2.43	0.096	2.43	0.096	2.43
PS - STACK GAS PRESSURE, "HG ABSOLUTE (MMHG)	30.22	767.48	30.28	769.00	30.36	771.03	30.29	769.17
% CO_2 - VOLUME % DRY	0	0	0	0	0	0	0	0
% O_2 - VOLUME % DRY	20	20	20	20	20	20	20	20
% CO - VOLUME % DRY	0.54	0.54	1.17	1.17	0.32	0.32	0.68	0.68
% N_2 - VOLUME % DRY	79.46	79.46	79.83	79.83	79.68	79.68	79.66	79.66
TS - AVERAGE STACK TEMPERATURE °F (°C)	220	105	214	101	188	87	207	98
% H_2O - % MOISTURE IN STACK GAS, BY VOLUME	4.4	4.4	5.1	5.1	3.7	3.7	4.4	4.4
AS - STACK AREA, FT^2 (M^2)	289	26.8	289	26.8	289	26.8	289	26.8
MD - MOLECULAR WEIGHT OF STACK GAS, DRY BASIS	28.97	28.97	29.16	29.16	28.90	28.90	29.01	29.01
MS - MOLECULAR WEIGHT OF STACK GAS, WET BASIS	28.48	28.48	28.59	28.59	28.49	28.49	28.52	28.52
VS - STACK GAS VELOCITY, FT/SEC, (M/SEC)	34.03	10.37	34.89	10.63	31.45	9.59	33.46	10.20
QA - STACK GAS VOLUMETRIC FLOW AT STACK CONDITIONS, ACFM (NM^3/MIN)	589024	16681	603896	17102	544425	15418	579115	16400
QS - STACK GAS VOLUMETRIC FLOW AT STANDARD CONDITIONS, DSCFM (NM^3/MIN)	441557	12505	454539	12873	433619	12280	443238	12553
% EA - PERCENT EXCESS AIR	4.7	4.7	4.7	4.7	4.7	4.7	4.7	4.7
III TEST CONDITIONS								
PB - BAROMETRIC PRESSURE, "HG (MMHG)	30.12	765.05	30.18	766.57	30.26	768.60	30.19	766.74
DN - SAMPLING NOZZLE DIAMETER, IN. (MM)	0.25	6.35	0.25	6.35	0.25	6.35	0.25	6.35
T - SAMPLING TIME, MIN	116	116	108	108	108	108	111	111
VM - SAMPLE VOLUME, ACF (M^3)	67.62	1.92	66.11	1.87	59.44	1.68	64.39	1.82
NP - NET SAMPLING POINTS	37	37	36	36	36	36	36	36
CP - PITOT TUBE COEFFICIENT	0.84	0.84	0.84	0.84	0.84	0.84	0.84	0.84
TM - AVERAGE METER TEMPERATURE °F (°C)	102	39	96	36	94	34	97	36
PM - AVERAGE ORIFICE PRESSURE DROP, "H_2O (MMH_2O)	0.04	23.98	1.04	26.39	0.91	23.01	0.96	24.46
VLC - CONDENSATE COLLECTED (IMPINGERS AND GEL), MLS		64.9		74.3		48.4		62.5
ΔP - STACK VELOCITY HEAD "H_2O (MMH_2O)	0.284	7.21	0.303	7.70	0.256	6.50	0.281	7.14
IV TEST CALCULATIONS								
VW - CONDENSED WATER VAPOR, SDCF (NM^3)	3.01	0.085	3.37	0.096	2.215	0.063	2.86	0.081
VM - VOLUME OF GAS SAMPLED AT STANDARD CONDITIONS, DSCF (NM^3)	64.036	1.81	63.418	1.80	57.400	1.626	61.618	1.745
% H_2O - PERCENT MOISTURE, BY VOLUME	4.4	4.4	5.1	5.1	3.7	3.7	4.4	4.4
MS - MOLECULAR WEIGHT OF STACK GAS, WET BASIS	28.48	28.48	28.59	28.59	28.49	28.49	28.52	28.52
VS - STACK VELOCITY, FT/SEC (M/SEC)	34.03	10.37	34.89	10.63	31.45	9.59	33.46	10.20
% I - PERCENT ISOKINETIC	104.2	104.2	107.7	107.7	102.2	102.2	104.7	104.7
V ANALYTICAL DATA								
A) ARSENIC FRONT HALF								
PROBE (MG)	---	53.12	---	22.96	---	6.0	---	27.36
CYCLONE (MG)	---	---	---	---	---	---	---	---
FILTER (MG)	---	14.50	---	14.0	---	8.0	---	12.17
ARSENIC FRONT HALF TOTAL (MG)	---	67.62	---	35.96	---	14	---	39.53
GRS/SDCF, (MG/M^3)	16.27	37.29	8.98	20.58	3.76	8.61	9.67	22.16
#/HR, KG/HR)	61.68	27.98	35.04	15.89	13.99	6.35	36.90	16.74
B) ARSENIC BACK HALF								
(MG)	---	1.55	---	0.77	---	1.6	---	1.31
GRS/SDCF, (MG/M^3)	0.37	0.86	0.19	0.43	0.43	0.98	0.32	0.76
#/HR, (KG/HR)	1.41	0.64	0.73	0.33	1.60	0.73	1.25	0.57
TOTAL ARSENIC (MG)	---	69.17	---	37.73	---	15.60	---	40.83
GRS/SDCF, (MG/M^3)	16.65	38.14	9.17	21.01	4.19	9.60	10.00	22.92
#/HR, (KG/HR)	63.09	28.62	25.77	16.23	15.59	7.07	38.15	17.31
C) TOTAL SO_2 (MG)	---	25859.12	---	55752.3	---	14026.5	---	31879.3
PPM	---	5361.3	---	11671.7	---	3244.3	---	6759.1
(MG/M^3)	6222.9	14258.9	10431.4	31041.7	3765.7	8628.5	6805.7	17976.4
#/HR, (KG/HR	23586.2	10698.6	52856.6	23975.6	14016.2	6357.7	30153.0	13677.3

TABLE 4. MATTE TAPPING ARSENIC/SO_2 RESULTS

RUN NUMBER	1		2		3		AVERAGE	
	ENGLISH UNITS	METRIC UNITS	ENGLISH UNITS	METRIC UNITS	ENGLISH UNITS	METRIC UNITS	ENGLISH UNITS	METRIC UNITS
I DATE	9/19/78	9/19/78	9/20/78	9/20/78	9/21/78	9/21/78		
II STACK PARAMETERS								
Pst - Static Pressure, "Hg (mmHg)	.13	3.36	.13	3.36	.13	3.36	.13	3.36
Ps - Stack Gas Pressure, "Hg Absolute (mmHg)	30.24	768.10	30.21	767.33	30.14	765.56	30.20	767.0
% CO_2 - Volume % Dry	0.	0.	0.	0.	0.	0.	0.	0.
% O_2 - Volume % Dry	20.	20.	20.	20.	20.	20.	20.	20.
SO_2 - Volume % Dry	.18	.18	.39	.39	.21	.21	.26	[illegible]
% N_2 - Volume % Dry	79.82	79.82	79.61	79.61	79.79	79.79	79.74	79.74
Ts - Average Stack Temperature °F (°C)	134.	56.7	163	72.8	164.	73.3	153.7	67.6
% H_2O - % Moisture in Stack Gas, By Volume	1.5	1.5	0.8	0.8	0.9	0.9	1.07	[illegible]
As - Stack Area, ft^2 (m^2)	5.85	.543	5.85	.543	5.85	.543	5.85	.543
Md - Molecular Weight of Stack Gas, Dry Basis	28.87	28.87	28.94	28.94	28.87	28.87	28.89	28.89
Ms - Molecular Weight of Stack Gas, Wet Basis	28.70	28.70	28.85	28.85	28.77	28.77	28.77	[illegible]
Vs - Stack Gas Velocity, ft/sec, (m/sec)	61.17	18.64	61.02	18.60	61.82	18.84	61.34	[illegible]
QA - Stack Gas Volumetric Flow at Stack Conditions, ACFM (Nm^3/min)	21470.7	608.2	21418.0	606.7	21698.8	614.7	21529.2	609.9
Qs - Stack Gas Volumetric Flow at Standard Conditions, DSCFM (Nm^3/min)	18944.1	536.7	18181.3	515.1	18329.1	519.2	18484.8	523.7
% EA - Percent Excess Air	4.7	4.7	4.7	4.7	4.7	4.7	4.7	4.7
III TEST CONDITIONS								
Pb - Barometric Pressure, "Hg (mmHg)	30.11	764.79	30.08	764.03	30.01	762.25	30.07	763.69
Dn - Sampling Nozzle Diameter, in. (mm)	.250	6.35	.250	6.35	.250	6.35	.250	6.35
T - Sampling Time, min	78.	78.	75.	75.	74.	74.	75.7	75.7
Vm - Sample Volume, ACF (m^3)	78.67	2.23	73.94	2.09	72.27	2.05	74.96	[illegible]
Np - Net Sampling Points	8.	8.	8.	8.	8.	8.	8.	8.
Cp - Pitot Tube Coefficient	.84	.84	.84	.84	.84	.84	.84	[illegible]
Tm - Average Meter Temperature °F (°C)	81.2	27.3	89.2	31.8	84.1	28.9	84.8	[illegible]
Pm - Average Orifice Pressure Drop, "H_2O (mmH_2O)	3.73	94.74	3.54	89.92	3.45	87.63	3.57	[illegible]
VLc - Condensate Collected (Impingers and Gel), mls	24.8	24.8	12.6	12.6	13.1	13.1	16.8	[illegible]
ΔP - Stack Velocity Head "H_2O (mmH_2O)	1.06	26.92	1.01	25.65	1.03	26.16	1.03	26.24
IV TEST CALCULATIONS								
Vw - Condensed Water Vapor, SCF (Nm^3)	1.17	.03	.593	.02	.617	.02	.793	[illegible]
Vm - Volume of Gas Sampled at Standard Conditions, DSCF (Nm^3)	77.91	2.21	72.05	2.04	70.91	2.01	73.62	[illegible]
% H_2O - Percent Moisture, By Volume	1.5	1.5	0.8	0.8	0.9	0.9	1.07	[illegible]
Ms - Molecular Weight of Stack Gas, Wet Basis	28.70	28.70	28.85	28.85	28.77	28.77	28.77	[illegible]
Vs - Stack Velocity, ft/sec (m/sec)	61.17	18.64	61.02	18.60	61.82	18.84	61.34	[illegible]
% I - Percent Isokinetic	90.5	90.5	91.0	91.0	90.0	90.0	90.5	[illegible]
V ANALYTICAL DATA								
A) Arsenic Front Half		18.60		22.40		20.5		20.50
Probe (mg)		—		—		—		—
Cyclone (mg)		90.0		475.0		455.0		[illegible]
Filter (mg)		108.60		497.40		475.5		[illegible]
Arsenic Front Half Total (mg)	15.7605	49.2052	78.0560	243.6949	75.8189	236.7106	56.5452	[illegible]
PPM, (mg/m^3)	3.4898	1.5841	16.5879	7.5297	16.2435	7.3734	12.1271	[illegible]
#/HR, (kg/hr)								
B) Arsenic - Impinger Collection		7.36		.405		.545		[illegible]
Impinger #1, 2 (mg)	1.0681	3.3347	.0636	.1984	.0869	.2713	.4062	[illegible]
PPM, (mg/m^3)	.2365	.1074	.0135	.0061	.0186	.0085	.0899	[illegible]
#/HR, (kg/hr)								
Impinger #3,4,5 (mg)	—	—	—	—	—	—	—	—
PPM, mg/m^3)	—	—	—	—	—	—	—	—
#/HR, (kg/hr)	—	—	—	—	—	—	—	—
C) Arsenic - Impinger Total (mg)								
PPM, (mg/m^3)								
#/HR, (kg/hr)								
D) Total Arsenic (mg)		115.96		497.81		476.0450		[illegible]
PPM, (mg/m^3)	16.8287	52.5400	78.1196	243.8934	75.9058	236.9819	[illegible]	[illegible]
#/HR, (kg/hr)	3.7264	1.6915	16.6014	7.5358	16.2627	7.3818	[illegible]	[illegible]
E) Total SO_2 (mg)		10843.15		21161.35		[illegible]		[illegible]
PPM		1844.073		3891.526		[illegible]		[illegible]
(mg/m^3)		4912.889		10367.6[illegible]		[illegible]		[illegible]
#/HR, (kg/hr)	348.4429	158.1675	705.7009	320.3395	[illegible]	[illegible]	[illegible]	[illegible]

TABLE 5 SLAG TAPPING ARSENIC/SO_2 RESULTS

RUN NUMBER	1		2		3		AVERAGE	
	ENGLISH UNITS	METRIC UNITS	ENGLISH UNITS	METRIC UNITS	ENGLISH UNITS	METRIC UNITS	ENGLISH UNITS	METRIC UNITS
I DATE	9/19/78	9/19/78	9/20/78	9/20/78	9/20/78	9/20/78		
II STACK PARAMETERS								
Pst - Static Pressure, "Hg (mmHg)	- .51	-13.07	- .51	-13.07	- .51	-13.07	- .51	-13.07
Ps - Stack Gas Pressure, "Hg Absolute (mmHg)	29.59	751.59	29.70	754.38	29.50	749.30	29.60	751.76
% CO_2 - Volume % Dry	0.	0.	0.	0.	0.	0.	0.	0.
% O_2 - Volume % Dry	20.	20.	20.	20.	20.	20.	20.	20.
SO_2 - Volume % Dry	.03	.03	.05	.05	.07	.07	.05	.05
% N_2 - Volume % Dry	79.97	79.97	79.95	79.95	79.93	79.93	79.95	79.95
Ts - Average Stack Temperature °F (°C)	67.6	19.8	106.0	41.1	118.8	48.2	97.5	36.4
% H_2O - % Moisture In Stack Gas, By Volume	1.5	1.5	2.3	2.3	0.3	0.3	1.4	1.4
As - Stack Area, ft² (m²)	3.98	.370	3.98	.370	3.98	.370	3.98	.370
Md - Molecular Weight of Stack Gas, Dry Basis	28.81	28.81	28.82	28.82	28.82	28.82	28.82	28.82
Ms - Molecular Weight of Stack Gas, Wet Basis	28.65	28.65	28.57	28.57	28.79	28.79	28.67	28.67
Vs - Stack Gas Velocity, ft/sec, (m/sec)	80.32	24.48	76.70	23.38	80.41	24.51	79.14	24.12
Qa - Stack Gas Volumetric Flow At Stack Conditions, ACFM (Nm^3/min)	19180.4	543.4	18316.0	518.9	19201.9	544.0	18899.4	535.4
Qs - Stack Gas Volumetric Flow At Standard Conditions, DSCFM (Nm^3/min)	18350.7	519.9	16570.6	469.4	17218.9	487.8	17380.1	492.4
% EA - Percent Excess Air	4.7	4.7	4.7	4.7	4.7	4.7	4.7	4.7
III TEST CONDITIONS								
Pb - Barometric Pressure, "Hg (mmHg)	30.11	764.79	30.21	767.33	30.01	762.25	30.11	764.79
DN - Sampling Nozzle Diameter, in. (mm)	.187	4.75	.187	4.75	.187	4.75	.187	4.75
T - Sampling Time, min	120.	120.	111.	111.	60.	60.	97.	97.
Vm - Sample Volume, DCF (m^3)	99.12	2.81	84.38	2.39	45.76	1.30	76.42	2.17
NP - Net Sampling Points	12.	12.	12.	12.	12.	12.	12.	12.
Cp - Pitot Tube Coefficient	.84	.84	.84	.84	.84	.84	.84	.84
Tm - Average Meter Temperature °F (°C)	82.7	28.2	77.1	25.1	76.6	24.8	78.8	26.0
Pm - Average Orifice Pressure Drop, "H_2O (mmH_2O)	2.68	68.07	2.15	54.61	2.39	60.71	2.41	61.13
Vlc - Condensate Collected (Impingers And Gel), mls	32.6	32.6	42.0	42.0	2.6	2.6	25.7	25.7
ΔP - Stack Velocity Head "H_2O (mmH_2O)	2.01	51.05	1.71	43.43	1.84	46.74	1.85	47.07
IV TEST CALCULATIONS								
Vw - Condensed Water Vapor, SCF (Nm^3)	1.53	.04	1.98	.06	.122	.00	1.21	.03
Vm - Volume Of Gas Sampled At Standard Conditions, DSCF (Nm^3)	97.64	2.77	84.16	2.38	45.41	1.29	75.74	2.15
% H_2O - Percent Moisture, By Volume	1.5	1.5	2.3	2.3	.3	.3	1.4	1.4
Ms - Molecular Weight Of Stack Gas, Wet Basis	28.65	28.65	28.57	28.57	28.79	28.79	28.67	28.67
Vs - Stack Velocity, ft/sec (m/sec)	80.32	24.48	76.70	23.38	80.41	24.51	79.14	24.12
% I - Percent Isokinetic	91.2	91.2	95.9	95.9	92.1	92.1	93.1	93.1
V ANALYTICAL DATA								
A) Arsenic Front Half								
Probe (mg)		2.09		6.00		.85		2.98
Cyclone (mg)		—		—		—		—
Filter (mg)		19.50		49.00		22.50		30.33
Arsenic Front Half Total (mg)		21.59		55.00		23.35		33.31
ppm, (mg/m^3)	2.5001	7.8055	7.3891	23.0692	5.8139	18.1514	5.2344	16.3420
#/hr, (kg/hr)	.5363	.2434	1.4312	.6495	1.1701	.5312	1.0459	.4747
B) Arsenic - Impinger Collection								
Impinger #1, 2 (mg)		.461		.115		.090		.222
ppm, (mg/m^3)	.0534	.1667	.0154	.0482	.0224	.0700	.0304	.0950
#/hr, (kg/hr)	.0115	.0052	.0030	.0014	.0045	.0020	.0063	.0029
Impinger #3,4,5 (mg)	—	—	—	—	—	—	—	—
ppm, (mg/m^3)	—	—	—	—	—	—	—	—
#/hr, (kg/hr)	—	—	—	—	—	—	—	—
C) Arsenic - Impinger Total (mg)								
ppm, (mg/m^3)								
#/hr, (kg/hr)								
D) Total Arsenic (mg)		22.051		55.115		23.44		33.54
ppm, (mg/m^3)	2.5535	7.9721	7.4046	23.1174	5.8363	18.2214	5.2648	16.4370
#/hr, (kg/hr)	.5477	.2486	1.4342	.6510	1.1746	.5332	1.0522	.4776
E) Total SO_2 (mg)		2112.26		3111.65		2408.4		2544.10
ppm		286.6391		489.8926		702.7373		493.0897
mg/m^3		763.6499		1305.1479		1872.1982		1313.6653
#/hr, (kg/hr)	52.4648	23.8151	80.9690	36.7540	120.6918	54.7852	84.7085	38.4514

TABLE 6 CALCINE DISCHARGE ARSENIC/SO_2 RESULTS

RUN NUMBER	1		2		3		AVERAGE	
	ENGLISH UNITS	METRIC UNITS	ENGLISH UNITS	METRIC UNITS	ENGLISH UNITS	METRIC UNITS	ENGLISH UNITS	METRIC UNITS
I DATE	9/20/78	9/20/78	9/20/78	9/20/78	9/21/78	9/21/78		
II STACK PARAMETERS								
Pst - Static Pressure, "Hg (mmHg)	.07	1.87	.07	1.87	.07	1.87	.07	1.87
Ps - Stack Gas Pressure, "Hg Absolute (mmHg)	30.08	764.03	30.08	764.03	30.12	765.05	30.09	769.37
% CO_2 - Volume % Dry	0.	0.	0.	0.	0.	0.	0.	0.
% O_2 - Volume % Dry	20.	20.	20.	20.	20.	20.	20.	20.
% H_2 - Volume % Dry	.07	.07	1.32	1.32	.22	.22	.54	.54
% N_2 - Volume % Dry	79.93	79.93	78.68	78.68	79.78	79.78	79.46	79.46
Ts - Average Stack Temperature °F (°C)	78.	25.6	78.	25.6	80.	26.7	78.7	26.0
% H_2O - % Moisture in Stack Gas, By Volume	2.5	2.5	0.	0.	0.	0.	.83	.83
As - Stack Area, ft^2 (m^2)	.545	.051	.545	.051	.545	.051	.545	.051
Md - Molecular Weight of Stack Gas, Dry Basis	28.82	28.82	29.27	29.27	28.88	28.88	28.99	28.99
Ms - Molecular Weight of Stack Gas, Wet Basis	28.55	28.55	29.27	29.27	28.88	28.88	28.90	28.90
Vs - Stack Gas Velocity, ft/sec, (m/sec)	39.38	12.00	40.09	12.22	47.34	14.43	42.27	12.88
Qa - Stack Gas Volumetric Flow at Stack Conditions, ACFM (Nm^3/min)	1287.7	36.48	1310.9	37.14	1548.0	43.85	1382.2	39.16
Qs - Stack Gas Volumetric Flow at Standard Conditions, DSCFM (Nm^3/min)	1238.8	35.09	1293.4	36.64	1523.7	43.16	1352.0	38.30
% EA - Percent Excess Air	4.7	4.7	4.7	4.7	4.7	4.7	4.7	4.7
III TEST CONDITIONS								
Pb - Barometric Pressure, "Hg (mmHg)	30.01	762.25	30.01	762.25	30.05	763.27	30.02	762.59
Dn - Sampling Nozzle Diameter, in. (mm)	.250	6.35	.250	6.35	.250	6.35	.250	6.35
T - Sampling Time, min	15.	15.	13.	13.	6.78	6.78	11.59	11.59
Vm - Sample Volume, ACF (m^3)	11.35	.321	9.93	.281	6.99	.198	9.42	.267
Np - Net Sampling Points	1.	1.	1.	1.	1.	1.	1.	1.
Cp - Pitot Tube Coefficient	.84	.84	.84	.84	.84	.84	.84	.84
Tm - Average Meter Temperature °F (°C)	80.	26.7	75.	23.9	76.3	24.6	77.1	25.1
Pm - Average Orifice Pressure Drop, "H_2O (mmH_2O)	2.4	60.96	2.3	58.42	3.3	83.82	2.7	67.73
Vlc - Condensate Collected (Impingers and Gel), mls	6.0	6.0	0.	0.	0.	0.	2.0	2.0
ΔP - Stack Velocity Head "H_2O (mmH_2O)	.48	12.19	.51	12.95	.70	17.78	.56	14.31
IV TEST CALCULATIONS								
Vw - Condensed Water Vapor, SDCF (Nm^3)	.282	.01	0.	0.	0.	0.	.094	.003
Vm - Volume of Gas Sampled at Standard Conditions, DSCF (Nm^3)	11.19	.32	9.88	.28	6.96	.20	9.34	.27
% H_2O - Percent Moisture, By Volume	2.5	2.5	0.	0.	0.	0.	.83	.83
Ms - Molecular Weight of Stack Gas, Wet Basis	28.55	28.55	29.27	29.27	28.88	28.88	28.90	28.90
Vs - Stack Velocity, ft/sec (m/sec)	39.38	12.00	40.09	12.22	47.34	14.43	42.27	12.88
% I - Percent Isokinetic	96.6	96.6	94.2	94.2	108.1	108.1	99.6	99.6
V ANALYTICAL DATA								
A) Arsenic Front Half		52.50		61.30		85.80		66.53
Probe (mg)		—		—		—		—
Cyclone (mg)		16.30		32.50		8.25		19.02
Filter (mg)		68.80		93.80		94.05		85.55
Arsenic Front Half Total (mg)	69.5173	217.0366	107.3447	335.1356	152.7862	477.0065	109.8827	343.0596
ppm, (mg/m^3)	1.0066	.4569	1.6228	.7366	2.7211	1.2352	1.7835	.8096
#/hr, (kg/hr)								
B) Arsenic - Impinger Collection		.52		2.20		.80		1.1733
Impinger #1, 2 (mg)	.5254	1.6404	2.5177	7.8603	1.2996	4.0575	1.4476	4.5194
ppm, (mg/m^3)	.0076	.0035	.0381	.0173	.0231	.0105	.0229	.0104
#/hr, (kg/hr)								
Impinger #3,4,5 (mg)		—		—		—		—
ppm, mg/m^3)	—	—		—	—	—	—	—
#/hr, (kg/hr)	—	—		—	—	—	—	—
C) Arsenic - Impinger Total (mg)		—		—		—		—
ppm, (mg/m^3)	—	—		—		—		—
#/hr, (kg/hr)	—	—		—		—		—
D) Total Arsenic (mg)		69.32		96.00		94.85		86.7233
ppm, (mg/m^3)	70.0427	218.6770	109.8623	342.9960	154.0858	481.0639	111.3303	347.5790
#/hr, (kg/hr)	1.0142	.4604	1.6609	.7539	2.7442	1.2457	1.8064	.8200
E) Total SO_2 (mg)		594.96		9936.36		1177.44		3902.87
ppm		704.4879		13325.58		2241.535		5423.869
(mg/m^3)		1876.862		35501.37		5971.786		14450.01
#/hr, (kg/hr)	8.7047	3.9513	171.9090	78.0340	34.0663	15.4636	71.5600	32.4830

TABLE 7 ARSENIC BAGHOUSE INLET (ARSENIC KITCHEN) ARSENIC/SO_2 RESULTS

RUN NUMBER	1		2		3		AVERAGE	
	ENGLISH UNITS	METRIC UNITS	ENGLISH UNITS	METRIC UNITS	ENGLISH UNITS	METRIC UNITS	ENGLISH UNITS	METRIC UNITS
I DATE	9/24/78	9/24/78	9/24/78	9/24/78	9/25/78	9/25/78		
II STACK PARAMETERS								
Pst - Static Pressure, "Hg (mmHg)	- .19	-4.86	- .19	-4.86	- .19	-4.86	- .19	-4.86
Ps - Stack Gas Pressure, "Hg Absolute (mmHg)	29.96	760.98	29.96	760.98	29.82	757.43	29.91	759.80
SO_2 - Volume % Dry	.2	.2	.2	.2	.2	.2	.2	.2
% O_2 - Volume % Dry	20.8	20.8	20.8	20.8	20.8	20.8	20.8	20.8
% CO - Volume % Dry	.32	.32	.57	.57	.49	.49	.46	.46
% N_2 - Volume % Dry	78.68	78.68	78.43	78.43	78.51	78.51	78.54	78.54
Ts - Average Stack Temperature °F (°C)	132.6	55.9	136.5	58.1	139.8	59.9	136.3	58.0
% H_2O - % Moisture in Stack Gas, By Volume	3.6	3.6	4.0	4.0	2.9	2.9	3.5	3.5
As - Stack Area, FT^2 (M^2)	3.83	.356	3.83	.356	3.83	.356	3.83	.356
Md - Molecular Weight of Stack Gas, Dry Basis	28.98	28.98	29.07	29.07	29.04	29.04	29.03	29.03
Ms - Molecular Weight of Stack Gas, Wet Basis	28.59	28.59	28.63	28.63	28.72	28.72	28.65	28.65
Vs - Stack Gas Velocity, FT/SEC, (M/SEC)	73.39	22.37	84.29	25.69	89.70	27.34	82.46	25.13
Qa - Stack Gas Volumetric Flow at Stack Conditions, ACFM (Nm^3/min)	16865.0	477.8	19369.8	548.7	20613.1	583.9	18949.3	536.8
Qs - Stack Gas Volumetric Flow at Standard Conditions, DSCFM (Nm^3/min)	14508.9	410.9	16590.1	470.0	17560.5	497.5	16218.5	459.5
% EA - Percent Excess Air	4.7	4.7	4.7	4.7	4.7	4.7	4.7	4.7
III TEST CONDITIONS								
Pb - Barometric Pressure, "Hg (mmHg)	30.15	765.81	30.15	765.81	30.01	762.25	30.10	764.62
Dn - Sampling Nozzle Diameter, in. (mm)	.187	4.75	.187	4.75	.187	4.75	.187	4.75
T - Sampling Time, min	96.	96.	96.	96.	96.	96.	96.	96.
Vm - Sample Volume, ACF (M^3)	68.82	1.95	77.21	2.19	81.98	2.32	76.0	2.15
Np - Net Sampling Points	24.	24.	24.	24.	24.	24.	24.	24.
Cp - Pitot Tube Coefficient	.84	.84	.84	.84	.84	.84	.84	.84
Tm - Average Meter Temperature °F (°C)	75.06	23.92	88.34	31.30	88.80	31.56	84.07	28.93
Pm - Average Orifice Pressure Drop, "H_2O (mmH_2O)	1.76	44.70	2.27	57.66	2.57	65.28	2.20	55.88
VLc - Condensate Collected (Impingers and Gel), mls	54.	54.	66.	66.	50.	50.	56.7	56.7
ΔP - Stack Velocity Head "H_2O (mmH_2O)	1.50	38.10	1.91	48.51	2.21	56.18	1.87	47.60
IV TEST CALCULATIONS								
Vw - Condensed Water Vapor, SDCF (Nm^3)	2.54	.07	3.11	.09	2.35	.07	2.67	.08
Vm - Volume of Gas Sampled at Standard Conditions, DSCF (Nm^3)	68.69	1.95	75.31	2.13	79.58	2.25	74.53	2.11
% H_2O - Percent Moisture, By Volume	3.6	3.6	4.0	4.0	2.9	2.9	3.5	3.5
Ms - Molecular Weight of Stack Gas, Wet Basis	28.59	28.59	28.63	28.63	28.72	28.72	28.65	28.65
Vs - Stack Velocity, FT/SEC (M/SEC)	73.39	22.37	84.29	25.69	89.70	27.34	82.46	25.13
% I - Percent Isokinetic	99.2	99.2	97.5	97.5	94.8	94.8	97.2	97.2
V ANALYTICAL DATA								
A) Arsenic Front Half		2800.0		2396.0		3030.0		2742.0
Probe (mg)								
Cyclone (mg)		540.00		840.0		370.0		583.33
Filter (mg)		3340.0		3236.0		3400.0		3325.33
Arsenic Front Half Total (mg)	549.2782	1716.4362	485.8369	1516.8079	483.0694	1508.1679	506.2282	1580.4700
ppm, (mg/M^3)	93.2101	42.3105	94.2107	42.7647	99.1531	45.0083	95.5247	43.3617
#/hr, (kg/hr)								
B) Arsenic - Impinger Collection		.80		.150		.96		.6367
Impinger #1, 2 (mg)	.1317	.4111	.0225	.0703	.1364	.4258	.0969	.3024
ppm, (mg/M^3)	.0223	.0101	.0044	.0020	.0280	.0127	.0182	.0083
#/hr, (kg/hr)								
Impinger #3,4,5 (mg)		—		—		—		—
ppm, mg/M^3)	—	—	—	—	—	—	—	—
#/hr, (kg/hr)	—	—	—	—	—	—	—	—
C) Arsenic - Impinger Total (mg)								
ppm, (mg/M^3)								
#/hr, (kg/hr)								
D) Total Arsenic (mg)		3340.80		3236.15		3400.96		3325.97
ppm, (mg/M^3)	549.9099	1716.8473	485.8594	1516.8782	483.2058	1508.5937	506.3250	1580.7731
#/hr, (kg/hr)	93.2325	42.3207	94.2151	42.7667	99.1813	45.0210	95.5429	43.3695
E) Total SO_2 (mg)		16457.04		32895.53		29493.5		26282.02
ppm		3174.4909		5787.6215		4910.6418		4624.2514
(mg/M^3)		8457.3229		15419.0972		13082.6910		12319.7037
#/hr, (kg/hr)	459.2703	208.4749	957.6981	434.7245	860.1113	390.4273	759.0266	344.5422

TABLE 8 ARSENIC BAGHOUSE INLET (METALLIC ARSENIC) ARSENIC/SO_2 RESULTS

RUN NUMBER	1		2		3		AVERAGE	
	ENGLISH UNITS	METRIC UNITS	ENGLISH UNITS	METRIC UNITS	ENGLISH UNITS	METRIC UNITS	ENGLISH UNITS	METRIC UNITS
I DATE	9/24/78	9/24/78	9/24/78	9/24/78	9/25/78	9/25/78		
II STACK PARAMETERS								
P_{ST} - Static Pressure, "Hg (mmHg)	.15	3.81	.15	3.81	.21	5.23	.17	4.28
P_S - Stack Gas Pressure, "Hg Absolute (mmHg)	30.30	769.62	30.30	769.62	30.22	767.59	30.27	768.94
% CO_2 - Volume % Dry	.1	.1	.1	.1	.1	.1	.1	.1
% O_2 - Volume % Dry	20.	20.	20.	20.	20.	20.	20.	20.
SO_2 - Volume % Dry	.24	.24	.17	.17	.22	.22	.21	.21
% N_2 - Volume % Dry	79.66	79.66	79.73	79.73	79.68	79.68	79.69	79.69
T_S - Average Stack Temperature °F (°C)	242.	116.7	233.2	111.8	207.	97.22	227.4	108.6
% H_2O - % Moisture in Stack Gas, By Volume	2.0	2.0	3.1	3.1	2.7	2.7	2.6	2.6
A_S - Stack Area, FT^2 (M^2)	7.57	.703	7.57	.703	7.57	.703	7.57	.703
M_D - Molecular Weight of Stack Gas, Dry Basis	28.90	28.90	28.87	28.87	28.89	28.89	28.89	28.89
M_S - Molecular Weight of Stack Gas, Wet Basis	28.69	28.69	28.53	28.53	28.60	28.60	28.61	28.61
V_S - Stack Gas Velocity, FT/SEC, (M/SEC)	38.31	11.68	44.60	13.59	43.78	13.34	42.23	12.87
Q_A - Stack Gas Volumetric Flow at Stack Conditions, ACFM (NM^3/MIN)	17400.4	492.9	20257.3	573.9	19884.9	563.3	19180.9	543.4
Q_S - Stack Gas Volumetric Flow at Standard Conditions, DSCFM (NM^3/MIN)	12988.6	367.95	15141.3	428.9	15469.5	438.2	14533.1	411.7
% EA - Percent Excess Air	4.7	4.7	4.7	4.7	4.7	4.7	4.7	4.7
III TEST CONDITIONS								
P_B - Barometric Pressure, "Hg (mmHg)	30.15	765.81	30.15	765.81	30.01	762.25	30.10	764.62
D_N - Sampling Nozzle Diameter, in. (mm)	.308	7.82	.308	7.82	.250	6.35	.29	7.33
T - Sampling Time, min	94.	94.	96.	96.	96.	96.	95.3	95.3
V_M - Sample Volume, ACF (M^3)	85.58	2.42	96.87	2.74	68.34	1.94	83.60	2.37
N_P - Net Sampling Points	12.	12.	12.	12.	12.	12.	12.	12.
C_P - Pitot Tube Coefficient	.84	.84	.84	.84	.84	.84	.84	.84
T_M - Average Meter Temperature °F (°C)	81.54	27.52	89.79	32.11	91.75	33.19	87.69	30.94
P_M - Average Orifice Pressure Drop, "H_2O (mmH_2O)	2.7	68.58	3.40	86.36	1.56	39.62	2.55	54.83
V_{LC} - Condensate Collected (Impingers and Gel), MLS	36.	36.	63.	63.	39.	39.	46.	46.
ΔP - Stack Velocity Head "H_2O (mmH_2O)	.351	8.92	.48	12.19	.480	12.19	.437	11.10
IV TEST CALCULATIONS								
V_W - Condensed Water Vapor, SDCF (NM^3)	1.69	.05	2.97	.08	1.84	.05	64.85	.06
V_M - Volume of Gas Sampled at Standard Conditions, DSCF (NM^3)	84.61	2.40	94.48	2.68	65.81	1.86	81.63	2.31
% H_2O - Percent Moisture, By Volume	2.0	2.0	3.1	3.1	2.7	2.7	2.6	2.6
M_S - Molecular Weight of Stack Gas, Wet Basis	28.69	28.69	28.53	28.53	28.60	28.60	28.61	28.61
V_S - Stack Velocity, FT/SEC (M/SEC)	38.31	11.68	44.60	13.59	43.78	13.34	42.23	12.87
% I - Percent Isokinetic	100.7	100.7	94.5	94.5	98.5	98.5	97.9	97.9
V ANALYTICAL DATA								
A) Arsenic Front Half		4450.0		2.04		3880.0		2777.35
Probe (mg)								
Cyclone (mg)		173.00		.530		80.00		84.51
Filter (mg)		4623.00		2.570		3960.00		2861.80
Arsenic Front Half Total (mg)	617.8842	1928.7543	.3076	.9602	680.0486	2123.1470	432.7134	1350.9538
ppm, (mg/M^3)	93.7907	42.5741	.0544	.0247	122.9637	55.8165	72.2696	32.8051
#/HR, (KG/HR)								
B) Arsenic - Impinger Collection		.84		1.27		.200		.7700
Impinger #1, 2 (mg)	.1123	.3505	.1520	.4745	.0343	.1072	.0995	.3107
ppm, (mg/M^3)	.0170	.0077	.0269	.0122	.0062	.0028	.0167	.0076
#/HR, (KG/HR)								
Impinger #3,4,5 (mg)		—		—		—		—
ppm, mg/M^3)	—	—	—	—	—	—	—	—
#/HR, (KG/HR)	—	—	—	—	—	—	—	—
C) Arsenic - Impinger Total (mg)								
ppm, (mg/M^3)								
#/HR, (KG/HR)								
D) Total Arsenic (mg)		4623.84		3.84		3960.200		2862.6267
ppm, (mg/M^3)	617.8964	1929.1047	.4595	1.4347	680.0829	2123.2543	432.8130	1351.2646
#/HR, (KG/HR)	93.8078	42.5818	.0813	.0369	122.9699	55.8193	72.2863	32.8127
E) Total SO_2 (mg)		15585.02		12292.47		11004.0		12960.491
ppm		2440.6278		1723.9122		2215.5144		2126.6848
(mg/M^3)		6502.2008		4592.7624		5902.4647		5665.8093
#/HR, (KG/HR)	316.1866	143.5264	260.3502	118.1798	341.8459	155.1729	306.1275	138.9594

Table 9

Arsenic Baghouse Outlet

RUN NUMBER	1		2		3		4	
	ENGLISH UNITS	METRIC UNITS	ENGLISH UNITS	METRIC UNITS	ENGLISH UNITS	METRIC UNITS	ENGLISH UNITS	METRIC UNITS
I DATE								
II STACK PARAMETERS								
Pst - Static Pressure, "Hg (mmHg)	0.10	0.0	0.0	0.0	0.0	0.0	0.0	0.0
Ps - Stack Gas Pressure, "Hg Absolute (mmHg)	30.15	765.81	30.15	765.81	30.01	762.25	30.10	764.62
% CO_2 - Volume % Dry	0.2	0.2	0.2	0.2	0.2	0.2	0.2	0.2
% O_2 - Volume % Dry	20.4	20.4	20.4	20.4	20.4	20.4	20.4	20.4
% CO - Volume % Dry	0.28	0.28	0.19	0.19	0.63	0.63	0.37	0.37
% N_2 - Volume % Dry	79.12	79.12	29.21	79.21	78.77	70.77	79.03	79.03
Ts - Average Stack Temperature °F (°C)	182	83	163	73	160	71	168	76
% H_2O - % Moisture In Stack Gas, By Volume	1.0	1.0	2.05	2.05	2.8	2.8	2.0	2.0
As - Stack Area, ft^2 (m^2)	7.77	0.72	7.77	0.72	7.77	0.72	7.77	0.72
Md - Molecular Weight of Stack Gas, Dry Basis	28.93	28.93	28.91	28.91	29.04	29.04	28.96	28.96
Ms - Molecular Weight of Stack Gas, Wet Basis	28.83	28.83	28.67	28.67	28.73	28.73	28.74	28.74
Vs - Stack Gas Velocity, ft/sec, (m/sec)	76.06	23.18	92.22	28.11	87.20	26.58	85.16	25.96
Qa - Stack Gas Volumetric Flow at Stack Conditions, ACFM (Nm^3/min)	35406	1002	42931	1216	40592	1150	39643	1123
Qs - Stack Gas Volumetric Flow at Standard Conditions, DSCFM (Nm^3/min)	29109	824	35958	1018	33726	955	32931	932
% EA - Percent Excess Air	4.7	4.7	4.7	4.7	4.7	4.7	4.7	4.7
III TEST CONDITIONS								
Pb - Barometric Pressure, "Hg (mmHg)	30.15	765.81	30.15	765.81	30.01	762.25	30.10	764.62
Dn - Sampling Nozzle Diameter, in. (mm)	0.1875	4.76	0.1875	4.76	0.1875	4.76	0.1875	4.76
T - Sampling Time, min	96	96	96	96	96	96	96	96
Vm - Sample Volume, ACF (m^3)	68.36	1.94	90.73	2.57	82.52	2.34	80.54	2.28
Np - Net Sampling Points	12	12	12	12	12	12	12	12
Cp - Pitot Tube Coefficient	0.84	0.84	0.84	0.84	0.84	0.84	0.84	0.84
Tm - Average Meter Temperature °F (°C)	74	24	93	34	93	34	87	31
Pm - Average Orifice Pressure Drop, "H_2O (mmH_2O)	1.87	47.50	2.91	73.91	2.48	62.99	2.42	61.47
Vlc - Condensate Collected (Impingers and Gel), mls		15.0		40.0		50.0		35
ΔP - Stack Velocity Head "H_2O (mmH_2O)	1.52	38.61	2.29	58.17	2.05	52.07	1.95	49.63
IV TEST CALCULATIONS								
Vw - Condensed Water Vapor, SDCF (Nm^3)	0.68	0.02	1.86	0.05	2.32	0.07	1.62	0.05
Vm - Volume of Gas Sampled at Standard Conditions, DSCF (Nm^3)	68.34	1.94	87.79	2.49	79.47	2.25	78.53	2.23
% H_2O - Percent Moisture, By Volume	1.0	1.0	2.05	2.05	2.8	2.8	2.0	2.0
Ms - Molecular Weight of Stack Gas, Wet Basis	28.83	28.83	28.67	28.67	28.73	28.73	28.74	28.74
Vs - Stack Velocity, ft/sec (m/sec)	76.06	23.18	92.22	92.22	87.20	26.58	85.16	25.96
% I - Percent Isokinetic	97.5	97.5	101.3	101.3	97.8	97.8	98.9	98.9
V ANALYTICAL DATA								
A) Arsenic Front Half								
Probe (mg)	---	134.00	---	38.24	---	212.0	---	128.08
Cyclone (mg)	---	---	---	---	---	---	---	---
Filter (mg)	---	0.70	---	0.625	---	3.00	---	1.44
Arsenic Front Half Total (mg)	---	134.700	---	38.865	---	215.000	---	129.52
grs/SDCF, (mg/m^3)	30.37	69.597	6.82	15.632	41.69	95.530	26.30	60.253
#/hr, kg/hr)	7.59	3.44	2.106	0.955	12.069	5.475	7.26	3.29
B) Arsenic Back Half								
(mg)	---	0.424	---	0.415	---	1.300	---	0.713
grs/SDCF, (mg/m^3)	0.096	0.219	0.073	0.167	0.25	0.578	0.140	0.321
#/hr, (kg/hr)	0.024	0.011	0.022	0.010	0.073	0.033	0.040	0.018
Total Arsenic (mg)	---	135.124	---	39.280	---	216.300	---	130.23
grs/SDCF, (mg/m^3)	30.47	69.816	6.89	15.799	41.94	96.108	26.43	60.574
#/hr, (kg/hr)	7.613	3.453	2.128	0.965	12.142	5.508	7.294	3.309
C) Total SO_2 (mg)	---	14525.3	---	12849.8	---	37618.0	---	21664.4
ppm	2822	2822	1943	1943	6285	6285	3683	3683
(mg/m^3)	3275.3	7504.95	2491.7	5168.34	7294.5	16714.71	4353.83	9796.00
#/hr, (kg/hr	818.374	371.212	696.19	315.79	2111.74	957.88	1208.76	548.29

TABLE 10. CONVERTER SLAG RETURN ARSENIC/SO_2 RESULTS

RUN NUMBER	1		2		3		AVERAGE	
CONVERTER SLAG RETURN	ENGLISH UNITS	METRIC UNITS	ENGLISH UNITS	METRIC UNITS	ENGLISH UNITS	METRIC UNITS	ENGLISH UNITS	METRIC UNITS
I DATE	9/19-21/78	9/19-21/78						
II STACK PARAMETERS								
Pst - Static Pressure, "Hg (mmHg)	- .16	-4.02					-.16	-4.02
Ps - Stack Gas Pressure, "Hg Absolute (mmHg)	29.91	759.71					29.91	759.71
% CO_2 - Volume % Dry	0.	0.					0.	0.
% O_2 - Volume % Dry	20.	20.					20.	20.
% CO - Volume % Dry	.07	.07					.07	.07
% N_2 - Volume % Dry	79.93	79.93					79.93	79.93
Ts - Average Stack Temperature °F (°C)	95.3	35.2					95.3	35.2
% H_2O - % Moisture in Stack Gas, By Volume	.8	.8					.8	.8
As - Stack Area, ft^2 (m^2)	7.07	.657					7.07	.657
Md - Molecular Weight of Stack Gas, Dry Basis	28.82	28.82					28.82	28.82
Ms - Molecular Weight of Stack Gas, Wet Basis	28.73	28.73					28.73	28.73
Vs - Stack Gas Velocity, ft/sec, (m/sec)	58.02	17.68					58.02	17.68
Qa - Stack Gas Volumetric Flow at Stack Conditions, ACFM (Nm^3/min)	24612.1	697.2					24612.1	697.2
Qs - Stack Gas Volumetric Flow at Standard Conditions, DSCFM (Nm^3/min)	23207.1	657.4					23207.1	657.4
% EA - Percent Excess Air	4.7	4.7					4.7	4.7
III TEST CONDITIONS								
Pb - Barometric Pressure, "Hg (mmHg)	30.07	763.78					30.07	763.78
Dn - Sampling Nozzle Diameter, in. (mm)	.187	4.75					.187	4.75
T - Sampling Time, min	22.6	22.6					22.6	22.6
Vm - Sample Volume, ACF (m^3)	13.40	.38					13.40	.38
Np - Net Sampling Points	18.	18.					18.	18.
Cp - Pitot Tube Coefficient	.84	.84					.84	.84
Tm - Average Meter Temperature °F (°C)	83.8	28.8					83.8	28.8
Pm - Average Orifice Pressure Drop, "H_2O (mmH_2O)	.97	24.6					.97	24.6
Vlc - Condensate Collected (Impingers and Gel), mls	2.1	2.1					2.1	2.1
ΔP - Stack Velocity Head "H_2O (mmH_2O)	1.01	25.7					1.01	25.7
IV TEST CALCULATIONS								
Vw - Condensed Water Vapor, SDCF (Nm^3)	.099	0.					.099	0.
Vm - Volume of Gas Sampled at Standard Conditions, DSCF (Nm^3)	13.10	.37					13.10	.37
% H_2O - Percent Moisture, By Volume	.8	.8					.8	.8
Ms - Molecular Weight of Stack Gas, Wet Basis	28.73	28.73					28.73	28.73
Vs - Stack Velocity, ft/sec (m/sec)	58.02	17.68					58.02	17.68
% I - Percent Isokinetic	91.4	91.4					91.4	91.4
V ANALYTICAL DATA								
A) Arsenic Front Half								
Probe (mg)		.750						.750
Cyclone (mg)								
Filter (mg)		.430						.430
Arsenic Front Half Total (mg)		1.180						1.180
ppm, (mg/m^3)	1.0185	3.1797					1.0185	3.1797
#/hr, (kg/hr)	.2763	.1254					.2763	.1254
B) Arsenic - Impinger Collection								
Impinger #1, 2 (mg)		.085						.085
ppm, (mg/m^3)	.0734	.2290					.0734	.2290
#/hr, (kg/hr)	.0199	.0090					.0199	.0090
Impinger #3,4,5 (mg)		—						
ppm, mg/m^3)	—	—						
#/hr, (kg/hr)	—	—						
C) Arsenic - Impinger Total (mg)								
ppm, (mg/m^3)								
#/hr, (kg/hr)								
D) Total Arsenic (mg)		1.265						1.265
ppm, (mg/m^3)	1.0918	3.4087					1.0918	3.4087
#/hr, (kg/hr)	.2962	.1344					.2962	.1344
E) Total SO_2 (mg)		700.57						700.57
ppm		708.5918						708.5918
(mg/m^3)		1887.7955						1887.7955
#/hr, (kg/hr)	164.0199	74.4530					164.0199	74.4530

TABLE 11

Process Sample Analysis Results

Sample Description	Date Sampled	Date Analyzed	Arsenic Concentration (%)
# 1 Plate Treater	9/78	12/3/78	38.0
Arsenic Baghouse Dust	9/78	12/4/78	69.0
# 1 Roaster Baghouse Dust	9/78	12/4/78	3.3
# 2 Reverb Matte	9/19/78	12/4/78	23.0
# 2 Reverb Matte	9/20/78	12/3/78	0.25
# 2 Reverb Matte	9/21/78	12/3/78	0.23
Roaster Calcine	9/15/78	12/4/78	1.21
Roaster Calcine	9/16/78	12/3/78	0.90
Roaster Calcine	9/18/78	12/4/78	1.12
Roaster Calcine	9/19/78	12/3/78	0.62
Roaster Calcine	9/20/78	12/3/78	0.70
Roaster Calcine	9/21/78	12/4/78	1.22
Roaster Calcine	9/22/78	12/3/78	0.71
Converter Slag	9/19/78	12/3/78	0.20
Converter Slag	9/20/78	12/3/78	0.12
Converter Slag	9/21/78	12/3/78	0.24
Roaster Charge	9/15/78	12/4/78	0.90
Roaster Charge	9/16/78	12/4/78	0.88
Roaster Charge	9/18/78	12/4/78	0.89
Roaster Charge	9/19/78	12/4/78	0.70
Roaster Charge	9/20/78	12/3/78	0.81
Roaster Charge	9/21/78	12/3/78	0.66
Roaster Charge	9/22/78	12/3/78	0.71
Godfry Calcine Charge	9/24/78	12/4/78	2.60
Godfry Calcine Charge	9/25/78	12/4/78	3.80
Godfry Calcine Charge	9/25/78	12/4/78	5.00
Godfry Calcine Charge	9/24/78	12/4/78	3.00
Mexican Arsenic	9/25/78	12/4/78	75.3
Reverb Slac, Slag Pot #1	9/19/78	12/3/78	0.53
Reverb Slag, Slag Pot #2	9/20/78	12/3/78	0.62
Reverb Slag, Slag Pot #1 Dump	9/20/78	12/3/78	0.55
Reverb Slag, Slag Pot #2 Dump	9/21/78	12/3/78	0.27
Reverb Slag, Slag Pot #3	9/21/78	12/3/78	0.54
Reverb Slag, Slag Pot #3 Top	9/22/78	12/3/78	0.51
Reverb Slag, Slag Pot #3 Dump	9/22	12/3/78	0.62
Reverb Slag, Slag Pot #4	9/22/78	12/3/78	0.59
Reverb Slag, Slag Pot #3 Bottom	9/22/78	12/3/78	0.63
Reverb Slag, Slag Pot #4 Dump	9/22/78	12/3/78	0.67
Reverb Slag #2	9/19/78	12/3/78	0.26
Reverb Slag #2	9/20/78	12/3/78	0.28
Reverb Slag #2	9/21/78	12/3/78	0.29

Table 12 Asarco Secondary Standard Analysis Results

Sample	TRW Result (%As)	Asarco Result (%As)
#1 Plate Treater	41.2	40.12
Anode Copper	0.09	0.10
Converter Blister	0.29	0.30
Reverberatory Slag	1.07	1.02

SECTION 3
PROCESS DESCRIPTION

SECTION 4

LOCATION OF SAMPLING POINTS

1) Roaster baghouse inlet - The duct carrying emissions from the roasting process is balloon shaped, measuring 11 feet high and 8 feet wide at the widest point. Sampling was done through four 4 inch sampling ports on top of the flue. The nearest upstream disturbance was 50 feet (4 diameters) away, the nearest downstream disturbance was a transition section into the baghouse which was 10 feet away. Sampling was done at 20 traverse points. Figure 1 is a diagram of the sampling location.

2) Roaster baghouse outlet - The treated gas leaving the roaster baghouse was sampled approximately 1000 feet downstream from the baghouse. The discharge duct was round, had an inside diameter of 90 inches, and had sampling ports on the side and top. The nearest upstream disturbance was 100 feet (13 diameters) and the nearest downstream disturbance was 40 feet (4 1/2 diameters) away. Sampling was done at 12 traverse points. Figure 2 is a diagram of this sampling location.

3) Reverberatory furnace electrostatic precipitator - The outlet of the electrostatic precipitator treating the emissions from the reverberatory furnace has approximately 75 feet of straight ducting before entering the main stack. There were ten sampling ports on the top of the rectangular brick flue, which were 20 feet from the transition section leaving the electrostatic precipitator. Forty-eight traverse points were chosen for sampling, but it was found that a significant amount of sediment in the duct precluded sampling at twelve of them. Figure 3 is a diagram of this location.

4) Matte tapping - Matte tapping emissions are captured by a moveable hood over the matte tapping ladle, and are ducted to an ESP. From the ESP, a brick flu then transfers the gases to the main stack. Matte tapping emissions were sampled in a vertical section of a round duct approximately 100 feet above the hood. The nearest upstream disturbance was 75 feet (22 diameters) away, and the nearest downstream disturbance was 10 feet (3 diameters) away. Normally, 12 traverse points would be used for a site of this configuration, however, 8 points were chosen as explained below.

   Matte taps vary in length and are relatively short. Due to the short time period, one point was sampled per tap and a 12 point sample, then would require 12 taps. If the smelter were operating at full smelt (or full production) it would be a simple matter to sample 12 points; however, production at the smelter was

curtailed from time to time. This was done by direction of the ASARCO weather station that continually monitored local weather conditions as well as ambient SO_2 levels provided by SO_2 monitors located throughout the city. In the fall of the year, weather conditions are generally favorable for smelting only at night, and often-times then only at less than full productive capacity. These were the conditions encountered during testing.

At times, only one converter was in operation throughout the night, and one converter requires only 8-9 ladles of matte throughout the cycle. If only one converter was on line, and only one point was sampled per tap, then a 12 point sample would require over a day to complete. Further-more, these samples would be difficult to correlate with slag tap samples which were more easily obtained due to longer slag tapping times. Analysis of the matte tapping duct velocity traverse indicated that an 8 point sample would provide adequate data as well as allowing a sample to be taken in only one converter cycle. Samples were taken at 8 traverse points during matte tapping operations, and Figure 4 is a diagram of this sampling location.

5) Slag tapping - Slag tapping emissions are captured by a hood over the slag trough and are ducted to the same GSD as are the matte tapping emissions. Slag tapping emissions were sampled in a section which angles down 20° from the horizontal. The sampling ports are twenty feet downstream from a 20° bend (5 diameters), and seven feet upstream from a 60° bend (2 1/2 diameters). Samples were taken at twelve traverse points during slag tapping operations. Figure 5 is a diagram of this location.

6) Calcine discharge - Dust emissions from loading larry cars from the roasters are collected from slots in the loading apparatus. These emissions in turn are routed to the main brick flue through a 10 inch duct. The emissions were sampled 9 feet (11 diameters) downstream from the blower, which was the nearest upstream disturbance. Samples were taken at a single point due to the small duct diameter. Sampling was done only shile larry cars were being loaded. Figure 6 is a diagram of this location.

7) Arsenic kitchen - Arsenic trioxide is produced in the arsenic kitchen area. The effluent gases from this process are routed through a baghouse before being discharged through the main stack. The sampling location was at a vertical round duct which is 26 1/2 inches in diameter. The nearest upstream disturbance was the transition from the arsenic kitchen, a reducing section of ducting, which was 6 feet (3 diameters) away. The nearest downstream disturbance was a 90° bend 5 feet (2 diameters) away. Sampling was done at 24 traverse points. Figure 7 is a diagram of this location.

8) Metallic arsenic - In the metallic arsenic area, arsenic trioxide is converted to elemental arsenic. The effluent gases from this process are routed to the same baghouse as are the arsenic kitchen discharges. The sampling location for this emission stream was in a 37.25 inch round duct which slanted up at a 20° angle from the horizontal. The nearest upstream flow disturbance was 50 feet (16 diameters) away, and the nearest down-stream flow disturbance was 6 feet (2 diameters) away. Sampling was done at twelve traverse points. Figure 8 is a diagram of this location.

9) Arsenic baghouse outlet - The discharge gases from the arsenic kitchen baghouse were sampled approximately 500 feet downstream from the baghouse. Samples were taken from a round horizontal duct with an inside diameter of 37.75 inches. The nearest upstream flow disturbance was 30 feet (9 1/2 diameters) away. Samples were taken at twelve traverse points simultaneously with tests at the two inlet locations. Figure 9 is a diagram of this location.

10) Converter slag return - During the converter cycle, slag is periodically poured off the matte and this slag is returned to the reverberatory furnace. The fugitive emissions discharged during this process are captured by a hooding system. These emissions were sampled from a round horizontal duct 36 inches in diameter. The nearest upstream flow disturbance was 100 feet (33 diameters) and the nearest downstream flow disturbance was 25 feet (8 diameters) away. Samples were taken at 12 traverse points. Figure 10 is a diagram of this location.

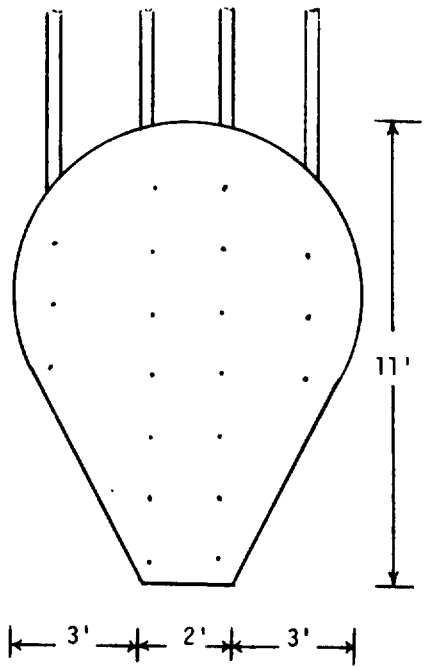

Traverse Point	Distance from Wall
1	9.4
2	28.3
3	47.1
4	66.0
5	84.9
6	103.7
7	122.6

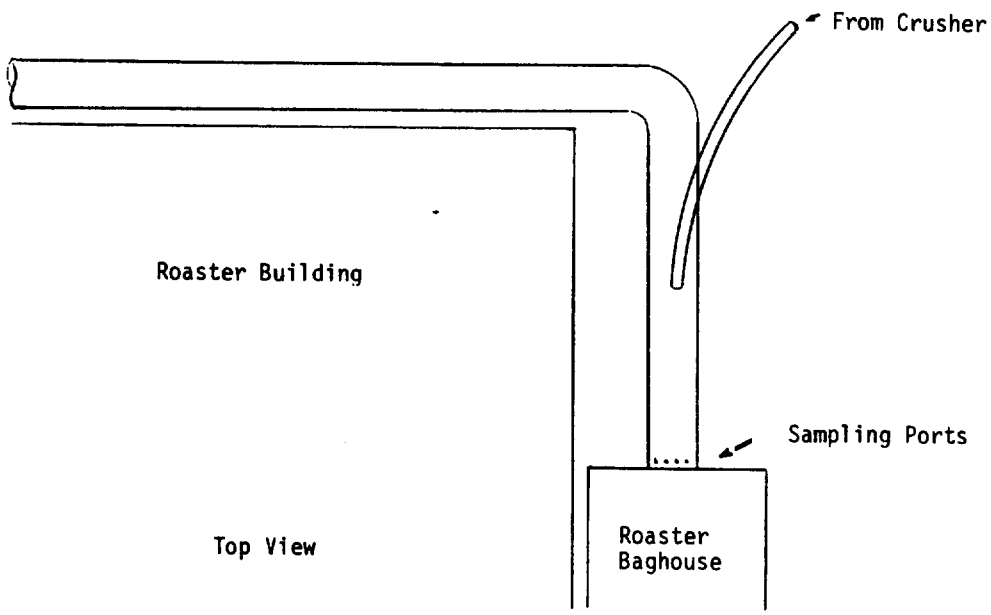

Figure 1 - Roaster Baghouse Inlet Duct

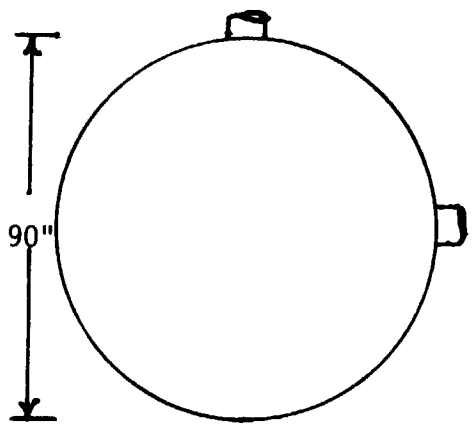

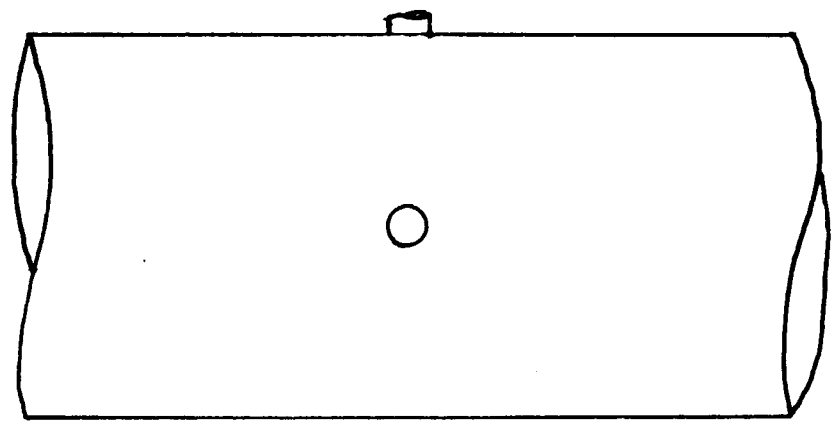

Horizontal Duct

Traverse Point Location

Traverse Point Number	% of Diameter	Distance from inside wall
1	4.4	4.0
2	14.6	13.1
3	29.6	26.6
4	70.4	63.4
5	85.4	76.9
6	95.6	86.0

Figure 2 - Roaster Baghouse Outlet Duct

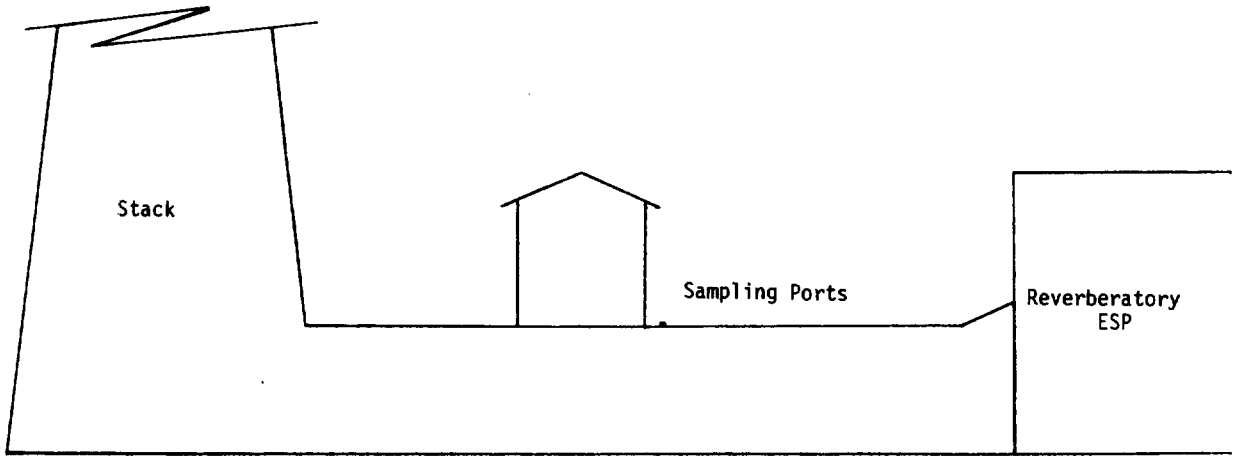

Side View

Traverse Point	Distances from top of Duct
1	9"
2	27"
3	45"
4	63"
5	81"
6	99"
7	117"
8	135"
9	153"
10	117"

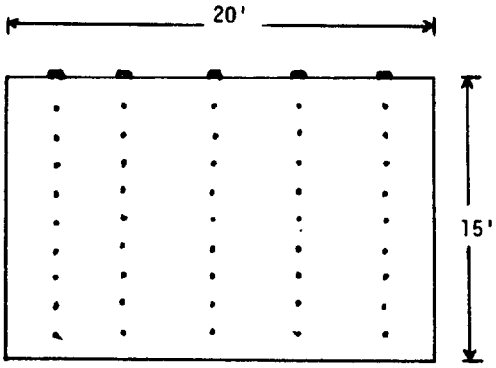

Cross Section

Figure 3 - Reverberatory Furnace ESP Outlet Duct

Traverse Point Location

Traverse Point Number	% of Diameter	Distance from inside wall
1	6.7	1.8
2	25.0	6.6
3	75.0	19.9
4	93.3	24.7

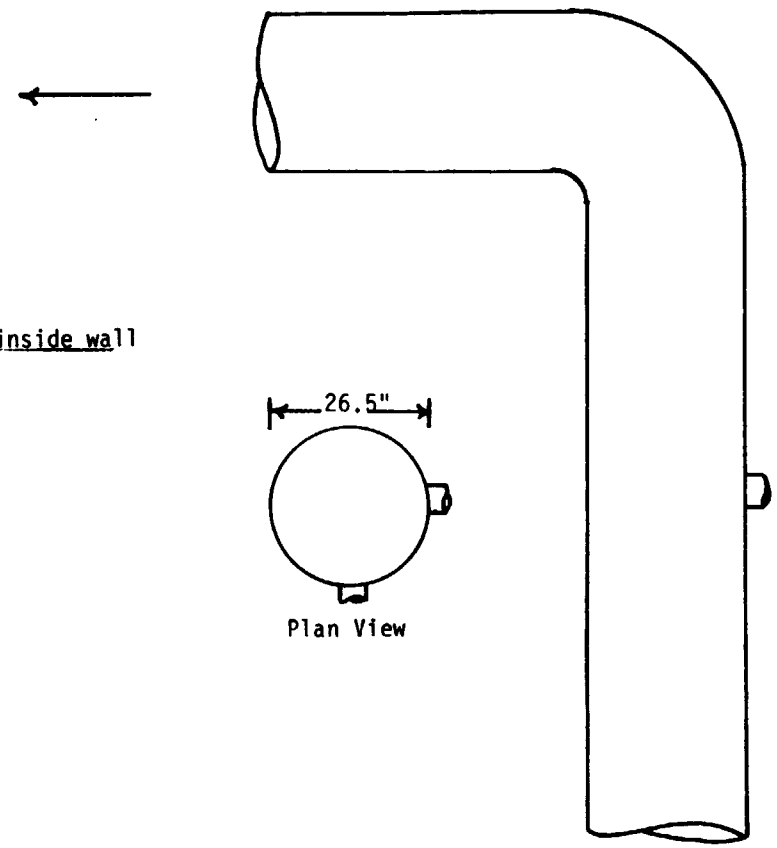

Figure 4 - Matte Tapping Duct

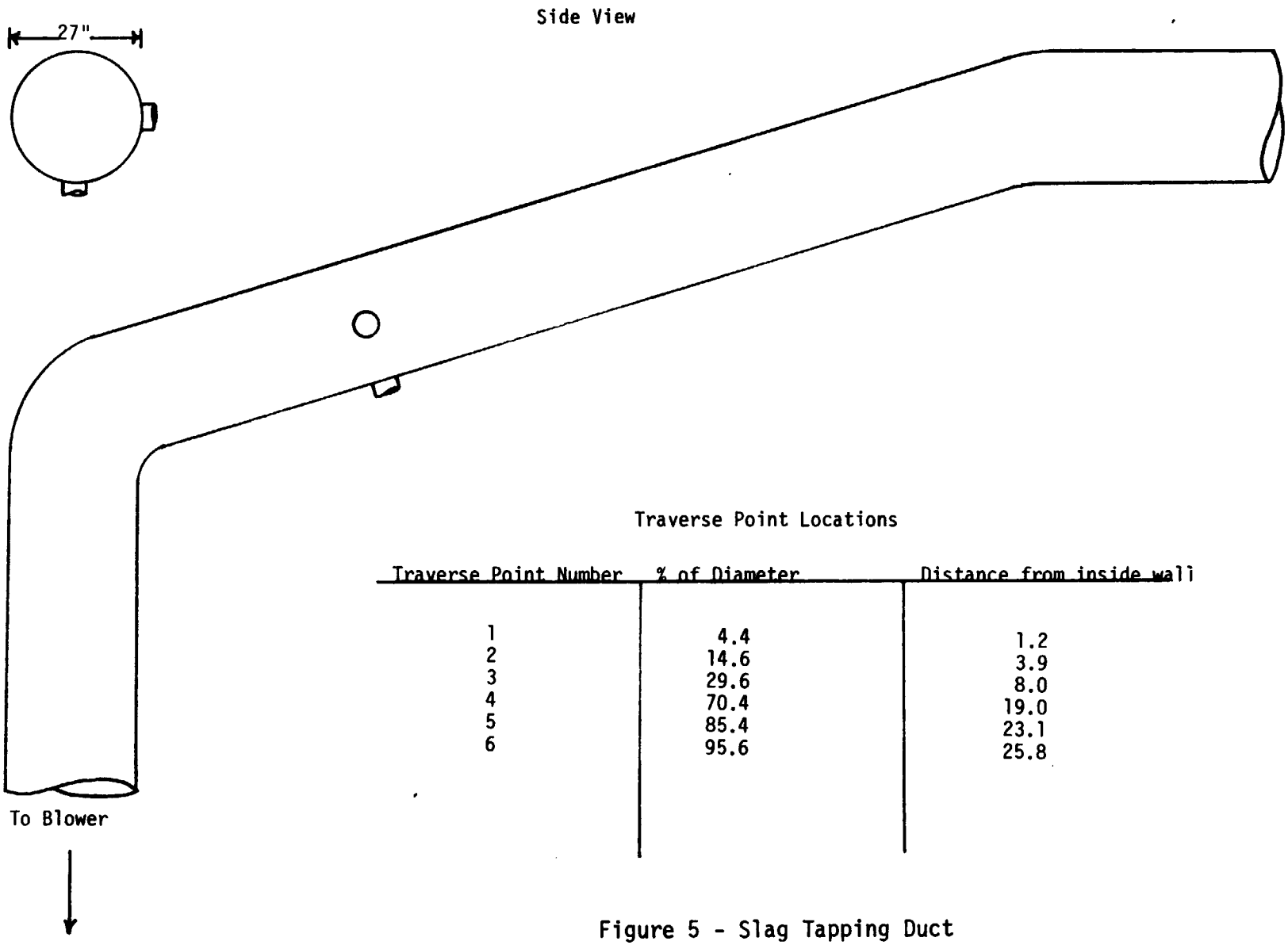

Traverse Point Locations

Traverse Point Number	% of Diameter	Distance from inside wall
1	4.4	1.2
2	14.6	3.9
3	29.6	8.0
4	70.4	19.0
5	85.4	23.1
6	95.6	25.8

Figure 5 - Slag Tapping Duct

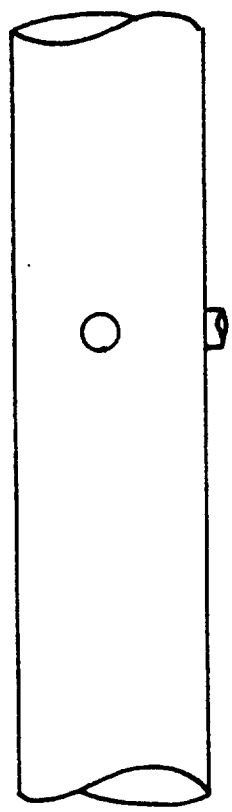

Side View

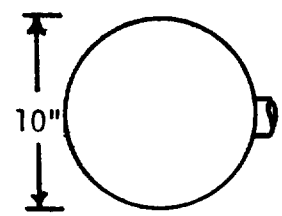

Plan View

Figure 6 - Calcine Discharge Duct

Vertical Duct

Traverse Point Number	% of Duct Diameter	Distance from inside wall
1	2.1	1.0
2	6.7	1.8
3	11.8	3.1
4	17.7	4.7
5	25.0	6.6
6	35.6	9.4
7	64.4	17.1
8	75.0	19.9
9	82.3	21.8
10	88.2	23.4
11	93.3	24.7
12	97.9	25.4

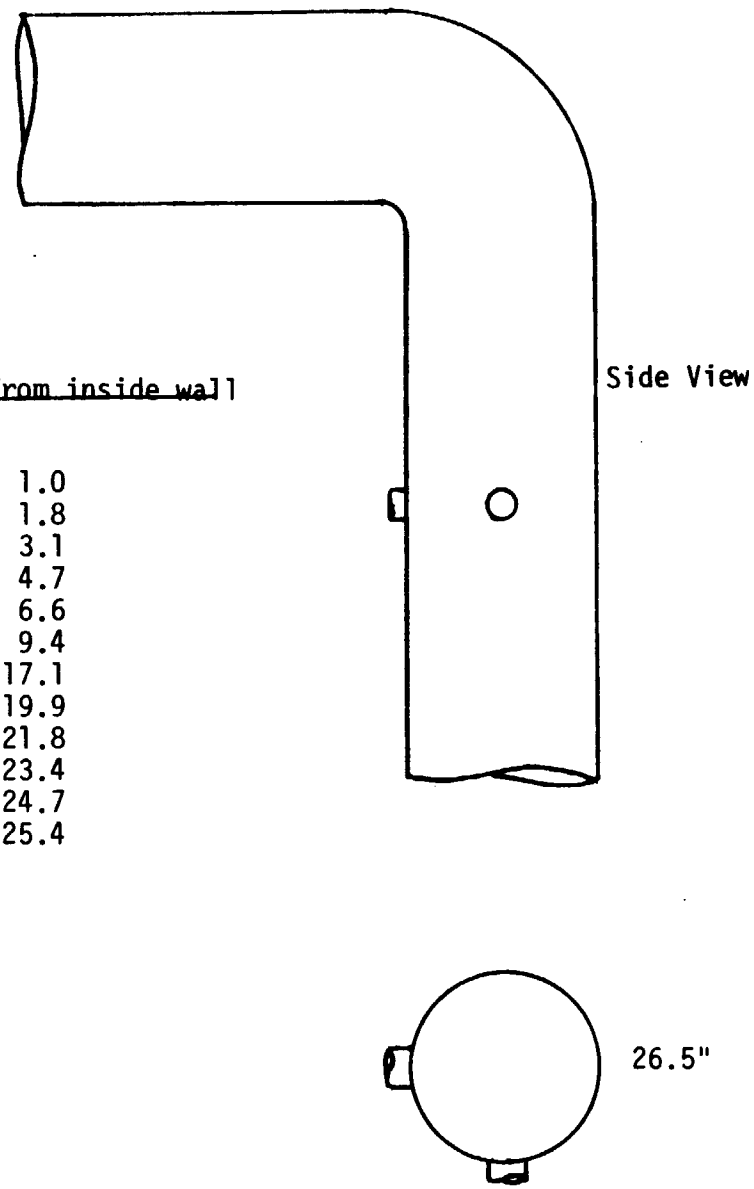

Figure 7 - Arsenic Kitchen inlet to Arsenic Baghouse

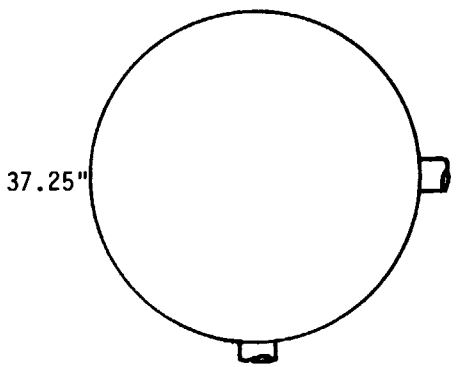

Plan View

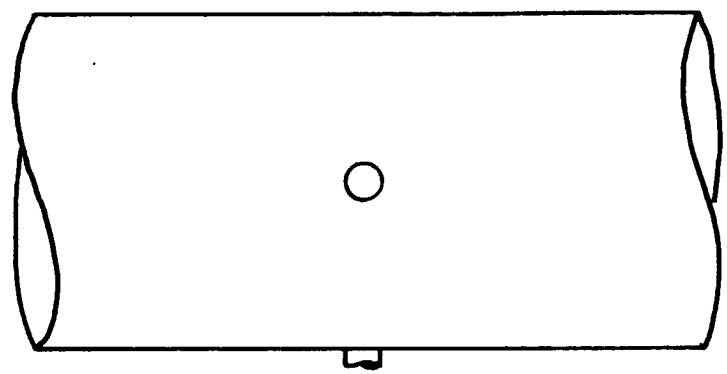

Side View

Traverse Point Locations

Traverse Point Number	% of Diameter	Distance from inside wall
1	4.4	1.6
2	14.6	5.4
3	29.6	11.0
4	70.4	26.2
5	85.4	31.8
6	95.6	35.6

Figure 8 - Metallic Arsenic inlet to Arsenic Baghouse

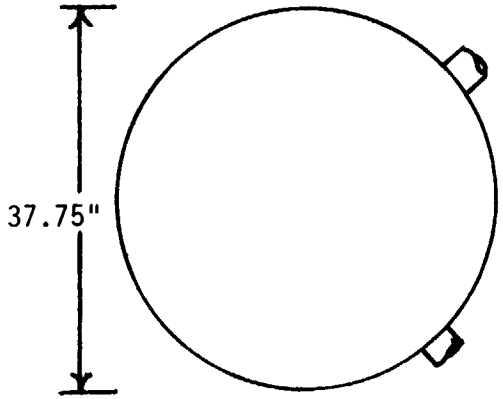

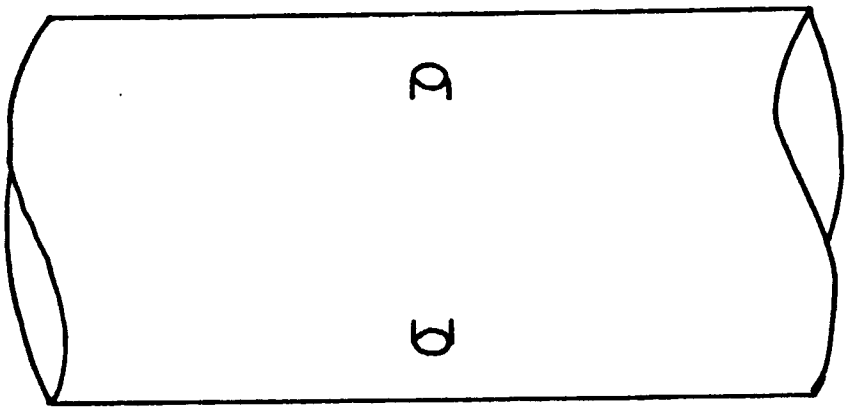

Side View

Traverse Point Location

Traverse Point #	% of Diameter	Inches from inside wall
1	4.4	1.7
2	14.6	5.5
3	29.6	11.2
4	70.4	26.6
5	85.4	32.2
6	95.6	36.1

Figure 9 - Arsenic Baghouse outlet Duct

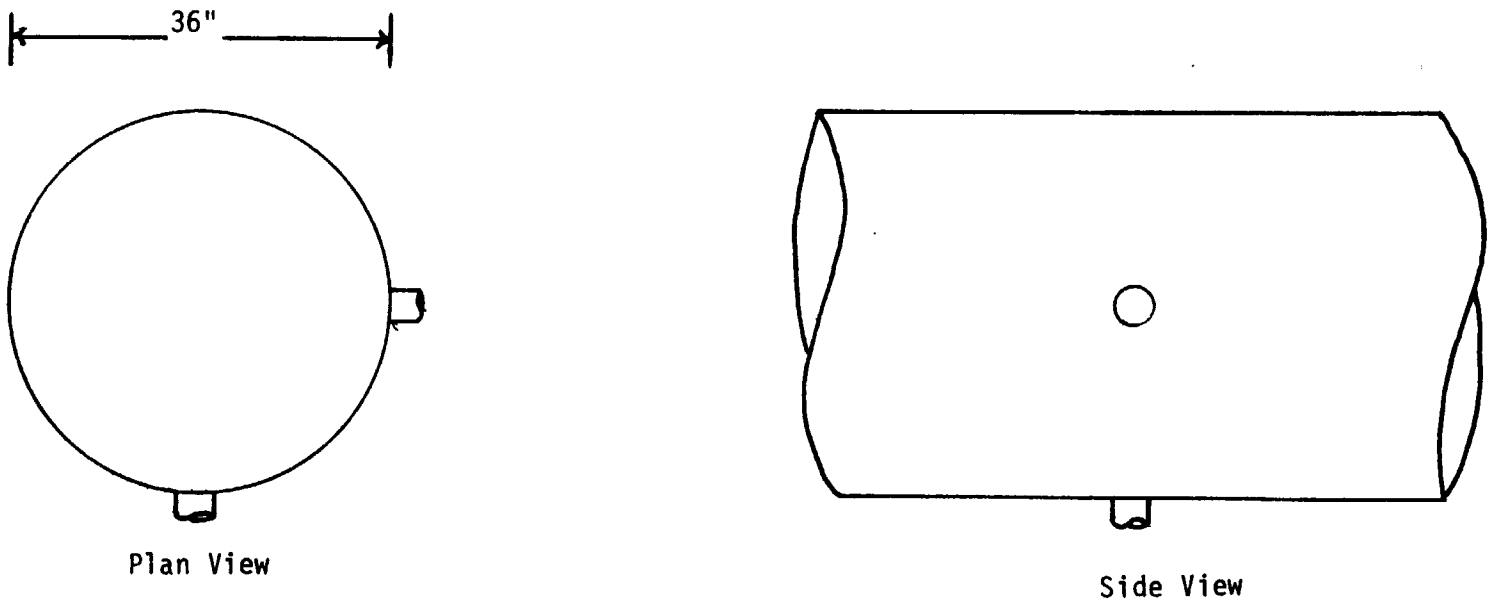

Trverse Point Number	% of Diameter	Distance from inside wall
1	4.4	1.6
2	14.6	5.3
3	29.6	10.7
4	70.4	25.3
5	85.4	30.7
6	95.6	34.4

Figure 10 - Converter Slag Return Duct

SECTION 5

SAMPLING AND ANALYTICAL PROCEDURE

A) Arsenic/Sulfur Dioxide Sampling

The sampling train used for arsenic/sulfur dioxide collection consists of an EPA Method 5 train modified by adding two additional impingers in series to the four used in the Method 5 train. The first two impingers contained 150 mls of distilled water each; third, fourth and fifth impingers contained 150 mls of 10 hydrogen peroxide each. The sixth impinger contained 250 grams of silica gel.

Before each test, a velocity traverse of the stack was done to determine the average stack temperature and velocity pressure. The velocity traverse was done according to EPA Methods 1 and 2. A grab sample of the stack gas was taken and analyzed with an Orsat apparatus for CO_2 and O_2. Before the first test at each location, the moisture content of the gas stream was estimated by either condensation in impingers as in EPA Method 4, or by wet and dry bulb thermometer if the stack gas temperature was below 120°F.

The arsenic/sulfur dioxide samples were taken at traverse points at the center of equal areas within the stack. The number of traverse points was determined by the number of duct diameters upstream and downstream from the nearest flow disturbances. The sampling rate was adjusted to isokinetic conditions using a nomograph which had been set based on the preliminary velocity traverse data, and moisture estimate.

The sampling time per traverse point was 3-9 minutes depending upon the sampling location. Leak checks of the sampling train were done at the beginning of each test, just before the sampling port change, and at the end of the test. At the end of each test the sampling train was inspected for cracked or broken glassware, and to assure that the filter remained intact.

Sampling and Analytical Procedures

At three of the sampling locations it was impractical to use the normal sampling tain configuration. These three locations were the slag tapping, metallic arsenic, and reverberatory furnace Cottrell locations. At the slag tapping and metallic arsenic locations the angle of the duct made it difficult to support the heated box/impinger box/probe combination while traversing. At the Aeverle Cottrell outlet, an overhanging roof caused a clearance problem when suspending the equipment. In these locations a flexible teflon line connecting the probe to the filter holder was used (see Figure 12). This allowed the probe to be held in position by one man. The material captured in the heated line and cyclone (used to catch any condensate from the flexible line) was recovered by rinsing with sodium hydroxide solution and brushing with a flexible brush. The flexible line rinse was added to the probe rinse. Condensate collected in the cyclone was measured and added to the probe rinse.

Sample Recovery

The sampling nozzle and probe liner were rinsed with 0.1N NaOH and brushed out with a nylon bristle brush with a teflon tubing handle. The remainder of the sampling train was removed to the mobile laboratory. The front half of the filter and connecting glassware were rinsed with 0.1N NaOH and this rinse was added to the nozzle and probe rinse. The filter was removed from the filter holder and placed in a polyethylene container, which was labeled and sealed. The first two impinger solutions were measured and placed in a glass sample container along with a 0.1N NaOH rinse of the impingers. The contents of the third, fourth and fifth impingers were measured and placed in a separate glass sample container along with distilled water rinse of the impingers. The silica gel in the sixth impinger was weighed to the nearest gram and regenerated.

B) Analysis

Analysis-Sulfur Dioxide

The samples were analyzed for sulfur dioxide by taking an aliquot of the hydrogen peroxide impinger solutions and titrating with barium perchlorate solution and thorin indicator as described in EPA Method 6 (Determination of Sulfur Dioxide Emissions from Stationary Sources).

1. Filter - Warm filter and loose particulate matter with 50 ml 0.1N NaOH for about 15 minutes. Add 10 ml concentrated HNO_3 and bring to boil for 15 minutes. Filter solution through No. 41 Whatman paper and wash with hot water. Evaporate filtrate, cool, redissolve in 5 ml of 1:1 HNO_3 transfer to a 40 ml volumetric flask and dilute.

2. Probe Wash and Impinger Solns - These should be combined and a 100 ml sample withdrawn. Add 10 ml concentrated HNO_3 and evaporate to a few milliliters. Redissolve with 5 ml 1:1 HNO_3 and dilute to 50 mls. A reagent blank should be carried through the same procedure. The resulting blank solution should be used in the dilution of standards to matrix match samples and standards.

3. All the samples prepared above should be screened by air/acetylene flame. The filter samples may require dilution with 0.8N HNO_3. Impinger solutions containing more than 26 mg/l of arsenic should be diluted since linearity decreased dramatically above that level.

   Since an entrained hydrogen flame provides about five times as much sensitivity as the air/acetylene flame, a matrix check of a sample in a hydrogen flame should be carried out by the method of standard additions, and compared with a value obtained from matrix matched standards in a hydrogen flame. If values are comparable (± 5%) the air entrained hydrogen flame.

   Due to high concentrations of copper on the filter an air/acetylene flame should always be used to dissociate any AsCu compounds stable in the cooler hydrogen flame.

4. For samples below the 1 mg/l level, hydride generation is necessary. An appropriate aliquot of digested sample in 0.8N HNO_3 containing less than about 10µg of arsenic is chosen (some screening may be necessary). Five mls of concentrated H_2SO_4 is added to the sample which is then placed on a hot plate until SO_3 fumes rill the flask.

   A reduction in volume to about 5 ml or less may be necessary. This step removes HNO_3 which causes a violent reaction when the reducing agent is added resulting in poor reproducibility and lowered sensitivity by producing I_2, NO_2 and possibly other species.

   One ml of 30% KI and 1 ml of 30% $SnCl_2$ are added to the sample, the former to act as a catalyst in hydride formation and the latter to reduce all the arsenic to As^{+3}. The sample is then diluted to about 15 ml and 15 ml of concentrated HCl is added. Powdered Zn (or $NaBH_4$) is then added, the reaction vessel is immediately closed and the nitrogen or argon carrier flow initiated. A peak should be produced within a few seconds.

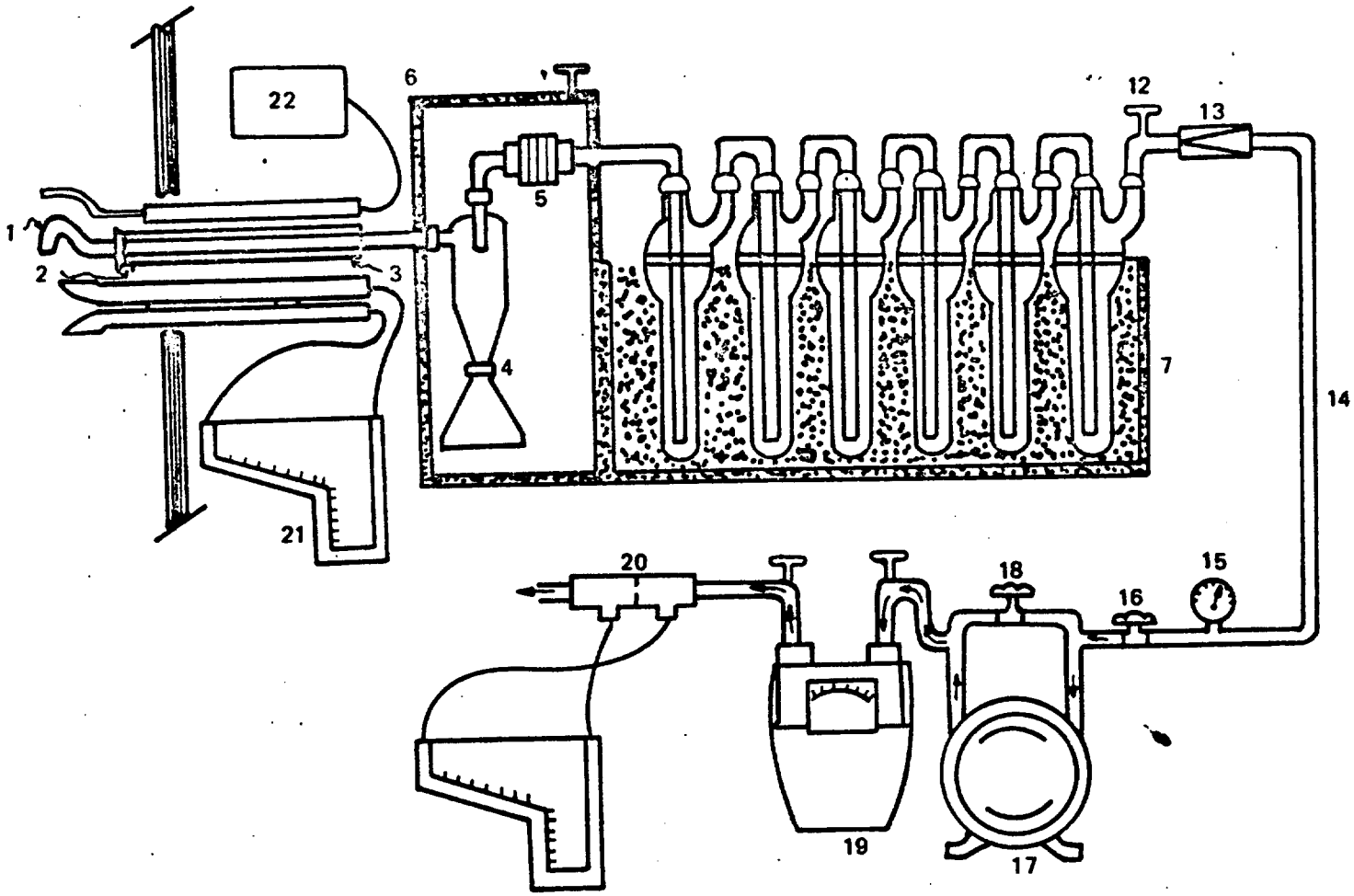

Figure 11 Arsenic sulfur dioxide sampling train.

KEY

1. Calibrated Nozzle
2. Heated Probe
3. Reverse Type Pitot
4. Cyclone Assembly
5. Filter Holder
6. Heated Box
7. Ice Bath with Impingers
12. Thermometer
13. Check Valve
14. Vacuum Line
15. Vacuum Gauge
16. Main Valve
17. Air Tight Pump
18. By-Pass Valve
19. Dry Test Meter
20. Orifice
21. Pitot Manometer
22. Thermometer

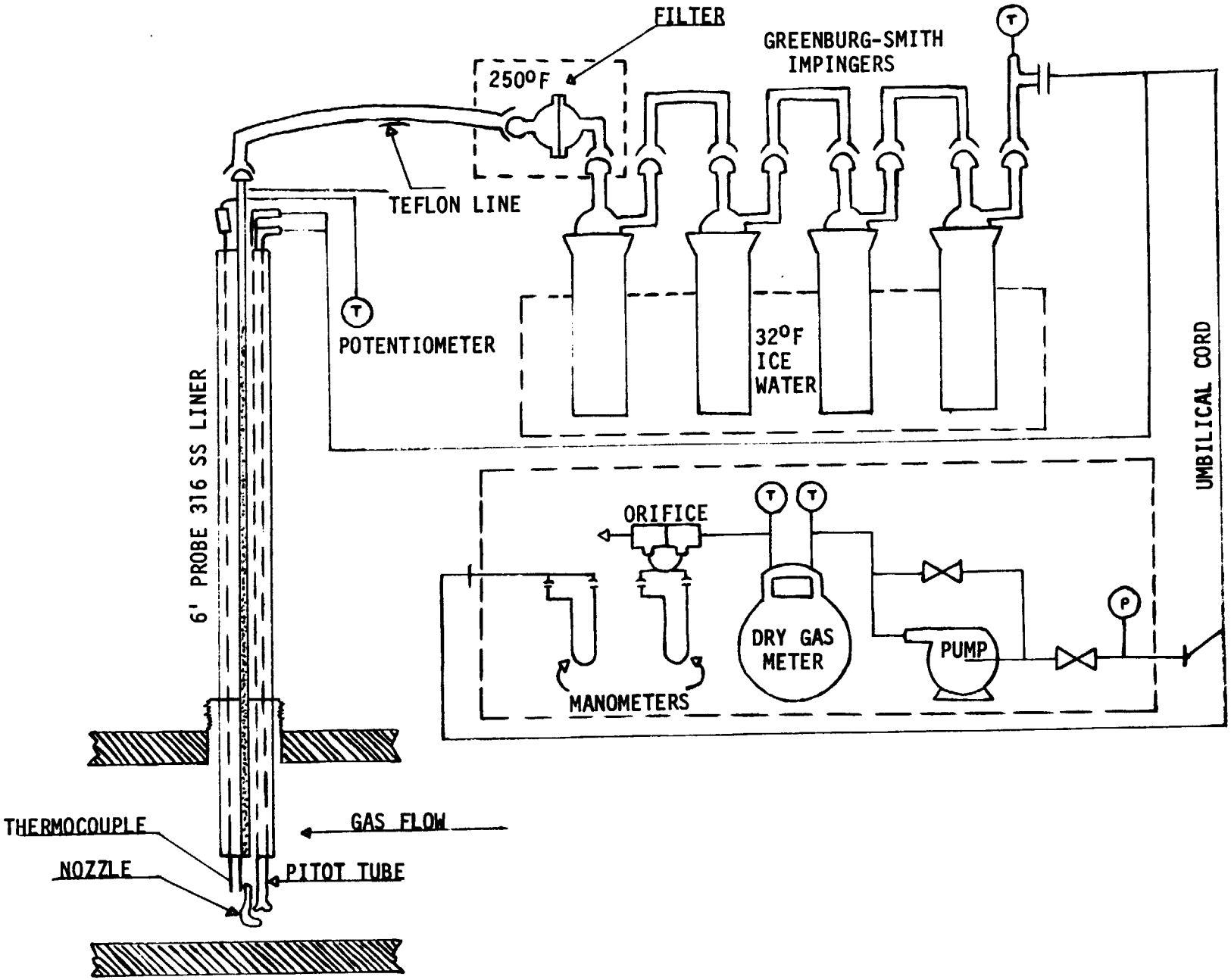

Figure 12 MODIFIED EPA SAMPLING TRAIN

APPENDIX A

Field and Laboratory Data

1. TRAVERSE POINT LOCATION

TRAVERSE POINT LOCATION FOR CIRCULAR DUCTS

PLANT Chevron Tacoma
DATE 9/27/72
SAMPLING LOCATION [illegible] Baghouse Outlet
INSIDE OF FAR WALL TO OUTSIDE OF NIPPLE, (DISTANCE A) 42"
INSIDE OF NEAR WALL TO OUTSIDE OF NIPPLE, (DISTANCE B) 4.25
STACK I.D., (DISTANCE A - DISTANCE B) 37.25
NEAREST UPSTREAM DISTURBANCE ?
NEAREST DOWNSTREAM DISTURBANCE ?
CALCULATOR [illegible]

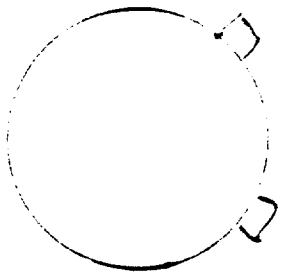

SCHEMATIC OF SAMPLING LOCATION

TRAVERSE POINT NUMBER	FRACTION OF STACK I.D.	STACK I.D.	PRODUCT OF COLUMNS 2 AND 3 (TO NEAREST 1/8 INCH)	DISTANCE B	TRAVERSE POINT LOCATION FROM OUTSIDE OF NIPPLE (SUM OF COLUMNS 4 & 5)
1	0.044	37.25	1.5	4.25	5.75
2	0.146		5.5		9.75
3	0.296		11.0		15.25
4	0.704		26.5		30.75
5	0.854		32.25		36.5
6	0.956		36.0		40.25

(Dur) 232
4/72

TRW / ENVIRONMENTAL ENGINEERING DIVISION

TRAVERSE POINT LOCATION FOR CIRCULAR DUCTS

PLANT ARSCO
DATE
SAMPLING LOCATION ROASTER BAGHOUSE OUTLET
INSIDE OF FAR WALL TO
OUTSIDE OF NIPPLE, (DISTANCE A) 7' 11"
INSIDE OF NEAR WALL TO
OUTSIDE OF NIPPLE, (DISTANCE B) 5"
STACK I.D., (DISTANCE A - DISTANCE B) 90
NEAREST UPSTREAM DISTURBANCE
NEAREST DOWNSTREAM DISTURBANCE
CALCULATOR

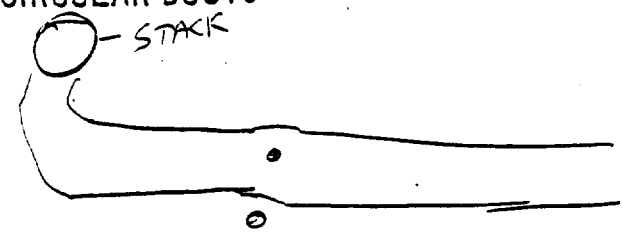

SCHEMATIC OF SAMPLING LOCATION

TRAVERSE POINT NUMBER	FRACTION OF STACK I.D.	STACK I.D.	PRODUCT OF COLUMNS 2 AND 3 (TO NEAREST 1/8 INCH)	DISTANCE B	TRAVERSE POINT LOCATION FROM OUTSIDE OF NIPPLE (SUM OF COLUMNS 4 & 5)
1	4.4	90	4.0 "	5	~~4.5~~ 9"
2	14.6	90	13 "	5	18"
3	29.6	90	26 1/2 "	5	31 1/2"
4	70.4	90	63 1/2	5	68 1/2"
5	85.4	90	76 3/4	5	81 3/4 "
6	95.6	90	86	5	91 "

TRW / ENVIRONMENTAL ENGINEERING DIVISION

TOP VIEW

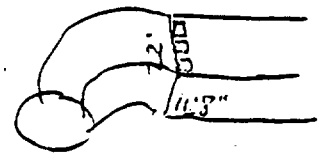

TRAVERSE POINT LOCATION FOR CIRCULAR DUCTS

ANT PARSCO
TE 9/13/78
SAMPLING LOCATION ESP OUTLET
INSIDE OF FAR WALL TO
OUTSIDE OF NIPPLE. (DISTANCE A) 16' 6"
INSIDE OF NEAR WALL TO
OUTSIDE OF NIPPLE. (DISTANCE B) 18"
STACK I.D., (DISTANCE A - DISTANCE B) 180"
NEAREST UPSTREAM DISTURBANCE
NEAREST DOWNSTREAM DISTURBANCE
CALCULATOR

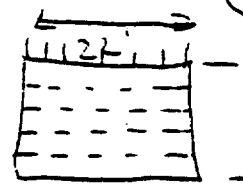

10 PORTS 2' APART
EVENLY ACROSS DUCT
PORT 3" x 2½ RECTANGULAR

SCHEMATIC OF SAMPLING LOCATION

40 POINTS USE

TRAVERSE POINT NUMBER	FRACTION OF STACK I.D.	STACK I.D.	PRODUCT OF COLUMNS 2 AND 3 (TO NEAREST 1/8 INCH)	DISTANCE B	TRAVERSE POINT LOCATION FROM OUTSIDE OF NIPPLE (SUM OF COLUMNS 4 & 5)
1	11 1/4		11 1/4 "	18"	29.25
2	22 1/2		33.75		51.75
3	22 1/2		56.25		74.25
4	22 1/2		78.75		96.75
5	22 1/2		101.25		119.25
6	22 1/2		123.75		141.75
7	22 1/2		146.25		164.25
8	22 1/2		168.75		186.75

TRW

ENVIRONMENTAL ENGINEERING DIVISION

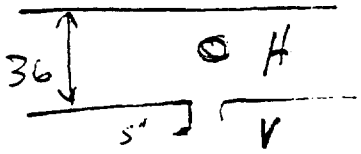

GAS FLOW DATA

LOCATION _____ PROCESS TESTED Converter Slag Ice Turn

TEST NO. 1 DATE TESTED 9-18-78

STATIC - 2.15 in H_2O PITOT TUBE TRAVERSE Pl[illegible]

POINT	Δp	T.°F.	VEL, VS FT/SEC	POINT	h " H_2O	T.°F.	VEL, VS FT/SEC
H. 1	~~.87~~ .91			V 1	.68		
H. 2	.96			V 2	.97		
H. 3	.97			V 3	.95		
H. 4	1.05			V 4	1.15		
H. 5	1.2			V 5	1.4		
H. 6	1.1			V 6	1.4		

Avg. Gas Velocity; Vs, avg. _____

Pitot Tube Correction Factor, Cp. _____

Duct Gas Molecular Weight, M.W. _____

Duct Pressure, Ps. _____

Gas Velocity:

$$VS = 85.49 \times cp \times \sqrt{\Delta p} \times \sqrt{\frac{Ts + 460}{Ms \times Ps}}$$

Duct Size _____

Duct Area _____ Sq.Ft. Avg. Gas Temp. _____ °F

Gas Flow Rate = _____ Ft/Sec x _____ Sq.Ft. x 60 = _____ CFM

Gas Flow Rate = _____ CFM x $\frac{528}{460+}$ x $\frac{\quad}{29.92}$ x (1.00 - $\frac{\quad}{100}$ %H_2O) = _____ CFM

TRAVERSE POINT LOCATION FOR CIRCULAR DUCTS

. LANT Puyallup Tacoma
DATE 9/2/72
AMPLING LOCATION Pumpkin Sign Station
ISIDE OF FAR WALL TO
OUTSIDE OF NIPPLE, (DISTANCE A) 41.5
'NSIDE OF NEAR WALL TO
OUTSIDE OF NIPPLE, (DISTANCE B) 5.5
STACK I.D., (DISTANCE A - DISTANCE B) 36
NEAREST UPSTREAM DISTURBANCE 100 ft
EAREST DOWNSTREAM DISTURBANCE 25 ft
ALCULATOR Beard

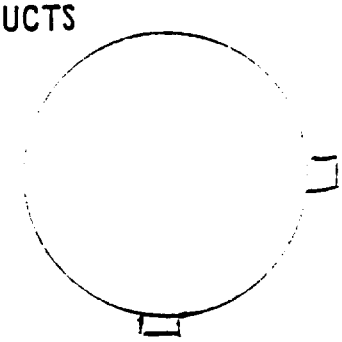

SCHEMATIC OF SAMPLING LOCATION

TRAVERSE POINT NUMBER	FRACTION OF STACK I.D.	STACK I.D.	PRODUCT OF COLUMNS 2 AND 3 (TO NEAREST 1/8 INCH)	DISTANCE B	TRAVERSE POINT LOCATION FROM OUTSIDE OF NIPPLE (SUM OF COLUMNS 4 & 5)
1	0.044	36	~~5.25~~ 1.5	5.5	7
2	0.146		~~7.5~~ 5.25		10.75
3	0.296		~~10.5~~ 10.5		16
4	0.704		~~25.25~~ 25.25		30.75
5	0.854		30.75		36.25
6	0.956		34.5		40

F (Dur) 232
4/72

TRAVERSE POINT LOCATION FOR CIRCULAR DUCTS

PLANT Power Tacoma
DATE 6/2/72
SAMPLING LOCATION Slag Tapping
INSIDE OF FAR WALL TO
OUTSIDE OF NIPPLE, (DISTANCE A) 33"
INSIDE OF NEAR WALL TO
OUTSIDE OF NIPPLE, (DISTANCE B) 6"
STACK I.D., (DISTANCE A - DISTANCE B) 27"
NEAREST UPSTREAM DISTURBANCE 20 ft
NEAREST DOWNSTREAM DISTURBANCE 7½ ft
CALCULATOR [illegible]

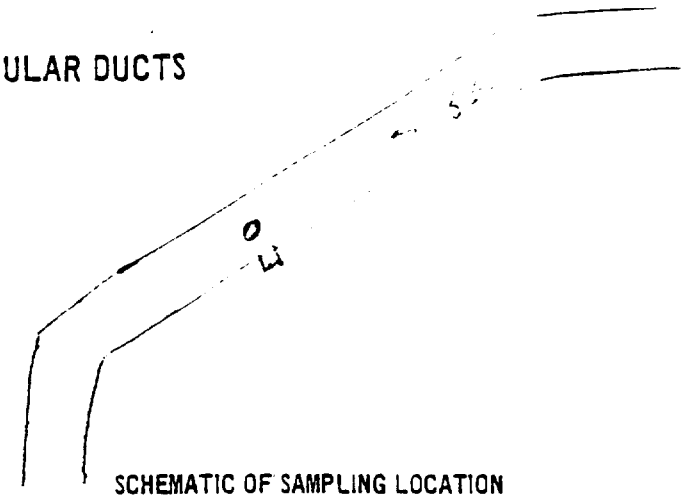

SCHEMATIC OF SAMPLING LOCATION

TRAVERSE POINT NUMBER	FRACTION OF STACK I.D.	STACK I.D.	PRODUCT OF COLUMNS 2 AND 3 (TO NEAREST 1/8 INCH)	DISTANCE B	TRAVERSE POINT LOCATION FROM OUTSIDE OF NIPPLE (SUM OF COLUMNS 4 & 5)
1	0.044	27"	1.25	6	7.25
2	0.146		4		10
3	0.296		7		14
4	0.704		19		25
5	0.854		23		29
6	0.956		25.75		31.75

EPA (Dur) 232
1-72

TRAVERSE POINT LOCATION FOR CIRCULAR DUCTS

PLANT [illegible]
DATE 9/13/72
SAMPLING LOCATION [illegible] Kiln
INSIDE OF FAR WALL TO
OUTSIDE OF NIPPLE, (DISTANCE A) 32.5"
INSIDE OF NEAR WALL TO
OUTSIDE OF NIPPLE, (DISTANCE B) 6"
STACK I.D., (DISTANCE A - DISTANCE B) 26.5
NEAREST UPSTREAM DISTURBANCE [illegible]
NEAREST DOWNSTREAM DISTURBANCE [illegible]
CALCULATOR [illegible]

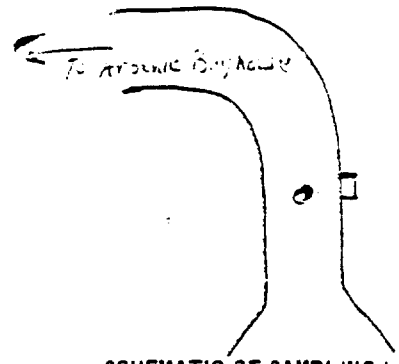

SCHEMATIC OF SAMPLING LOCATION

TRAVERSE POINT NUMBER	FRACTION OF STACK I.D.	STACK I.D.	PRODUCT OF COLUMNS 2 AND 3 (TO NEAREST 1/8 INCH)	DISTANCE B	TRAVERSE POINT LOCATION FROM OUTSIDE OF NIPPLE (SUM OF COLUMNS 4 & 5)
1	0.021	26.5	0.5	6"	7.0
2	0.067		1.75		7.75
3	0.112		3.0		9.0
4	0.177		4.75		10.75
5	0.25		6.5		12.5
6	0.357		9.5		15.5
7	0.644		17.0		23.0
8	0.75		20.0		26.0
9	0.823		21.75		27.75
10	0.888		23.5		29.5
11	0.933		24.75		30.75
12	0.979		26.0		32.0

(Dur) 232
4-72

TRAVERSE POINT LOCATION FOR CIRCULAR DUCTS

PLANT [illegible]
DATE [illegible]
SAMPLING LOCATION [illegible]
INSIDE OF FAR WALL TO
OUTSIDE OF NIPPLE, (DISTANCE A) 4.3"
INSIDE OF NEAR WALL TO
OUTSIDE OF NIPPLE, (DISTANCE B) 5.75"
STACK I.D., (DISTANCE A - DISTANCE B) 37.25"
NEAREST UPSTREAM DISTURBANCE [illegible]
NEAREST DOWNSTREAM DISTURBANCE [illegible]
CALCULATOR [illegible]

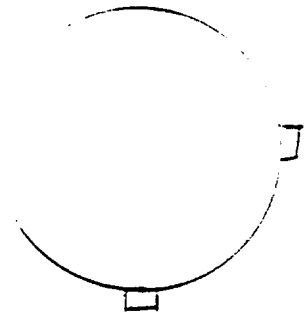

SCHEMATIC OF SAMPLING LOCATION

TRAVERSE POINT NUMBER	FRACTION OF STACK I.D.	STACK I.D.	PRODUCT OF COLUMNS 2 AND 3 (TO NEAREST 1/8 INCH)	DISTANCE B	TRAVERSE POINT LOCATION FROM OUTSIDE OF NIPPLE (SUM OF COLUMNS 4 & 5)
1	0.044	37.25	1.5	5.75	7.25
2	0.146	37.25	5.5		11.25
3	0.296	37.25	11.0		16.75
4	0.704	37.25	26.25		32.0
5	0.854	37.25	31.75		37.5
6	0.956	37.25	35.5		41.25

EPA (Dur) 232
4/72

TRAVERSE POINT LOCATION FOR CIRCULAR DUCTS

PLANT Georgia-Pacific Tacoma
DATE 9/12/78
SAMPLING LOCATION South Tunnel
INSIDE OF FAR WALL TO
OUTSIDE OF NIPPLE, (DISTANCE A) 38.25
INSIDE OF NEAR WALL TO
OUTSIDE OF NIPPLE, (DISTANCE B) 5.5
STACK I.D., (DISTANCE A - DISTANCE B) 32.75
NEAREST UPSTREAM DISTURBANCE 75 ft
NEAREST DOWNSTREAM DISTURBANCE 10 ft
CALCULATOR [illegible]

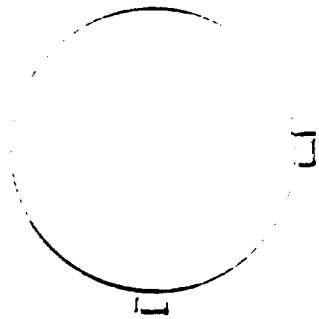

SCHEMATIC OF SAMPLING LOCATION

TRAVERSE POINT NUMBER	FRACTION OF STACK I.D.	STACK I.D.	PRODUCT OF COLUMNS 2 AND 3 (TO NEAREST 1/8 INCH)	DISTANCE B	TRAVERSE POINT LOCATION FROM OUTSIDE OF NIPPLE (SUM OF COLUMNS 4 & 5)
1	0.067	32.75	2.2	5.5	7.7"
2	0.25	32.75	8.12	5.5	13.62"
3	0.75	32.75	24.6	5.5	30.1"
4	0.933	32.75	30.5	5.5	36.0"

(Dur) 232
4-72

2. FIELD DATA SHEETS

Sample Coding System

Test	Sample Code
Roaster Baghouse Inlet	AA-RI-1,AA-RI-2, AA-RI-3
Roaster Baghouse Outlet	AA-RO-1; AA-RO-2, AA-RO-3
Esp Outlet	AA-Esp-1, AA-Esp-2, AA-Esp-3
Matte Tapping	AA-MT-1, AA-MT-2, AA-MT-3
Slag Tapping	AA-ST-1, AA-ST-2, AA-ST-3
Calcine Discharge	AA-CD-1, AA-CD-2, AA-CD-3
Arsenic Baghouse Inlet (arsenic Kitchen)	AA-AK-1, AA-Ak-2, AA-AK-3
Arsenic Baghouse Inlet (Metallic Arsenic)	AA-MA-1, AA-MA-2, AA-MA3
Arsenic Baghouse Outlet	AA-ABO-1, AA-ABO-2, AA-ABO-3
Converter Slag Return	AA_CSR-1

ASARCO 05.0471 602

FIELD DATA

PLANT AASEC
DATE 9/15/78
SAMPLING LOCATION ROASTER BAGHOUSE INLET
SAMPLE TYPE
RUN NUMBER AA-RT-1
OPERATOR Moore
AMBIENT TEMPERATURE 65°F
BAROMETRIC PRESSURE 29.38
STATIC PRESSURE, (P_s) 24 in H_2O
FILTER NUMBER (s) 520

PROBE LENGTH AND TYPE
NOZZLE I.D. 3/16
ASSUMED MOISTURE, % 4
SAMPLE BOX NUMBER
METER BOX NUMBER 2315
METER $\Delta H_@$
C FACTOR 1.0
PROBE HEATER SETTING
HEATER BOX SETTING
REFERENCE Δp 2.1

SCHEMATIC OF TRAVERSE POINT LAYOUT

0 0 0 0
0 1 2 3 4

READ AND RECORD ALL DATA EVERY 4 MINUTES

TRAVERSE POINT NUMBER	SAMPLING TIME, min / CLOCK TIME (24 hr CLOCK)	GAS METER READING (V_m), ft^3	VELOCITY HEAD (Δp_s), in. H_2O	ORIFICE PRESSURE DIFFERENTIAL (ΔH), in. H_2O DESIRED	ACTUAL	STACK TEMPERATURE (T_s), °F	DRY GAS METER TEMPERATURE INLET ($T_{m\,in}$), °F	OUTLET ($T_{m\,out}$), °F	PUMP VACUUM, in. Hg	SAMPLE BOX TEMPERATURE, °F	IMPINGER TEMPERATURE, °F	
	0 0850	119.997										
1.1	0854	121.411	1.2	1.05	1.05	205	82	70	8	250°	60	
1.2	0858	123.780	1.25	1.15	1.15	208	90	71	8			
1.3	0902	126.323	1.4	1.2	1.2	208	96	73	9			
~~3.4~~	Change to Pt 3											
~~3.5~~	0903 start	126.323										
3.1	0907	~~126.323~~ 127.71	.88	.80	.80	184	96	76	7			
3.2	0911	129.98	1.15	1.0	1.0	198	101	77	8.5			
3.3	0915	132.21	1.2	1.05	1.05	198	104	78	9.0			
3.4	0919	134.58	1.25	1.10	1.10	193	107	81	9.0			Δt = 1.10
3.5	0923	136.93	1.32	1.15	1.10	193	108	82	9.5			~~stack~~
3.6	0927	139.355	1.25	1.10	1.10	189	109	83	9.0		50	← TC?
3.7	0931	141.59	1.1	0.95	0.95	190	110	84	8.0		50	
3.8	0935	143.68	.86	0.74	.74	186	109	85	7.0		50	
3.9	0939	145.581	.75	0.66	0.66	?	108	86	6.0			STACK TC?
Change to Pt 2	0948											
2.1	0950	147.51	0.88	0.80	0.80	—	104	86	9.5		50	
2.2	0954	149.71	1.15	1.0	1.0	—	110	88	12.0		50	
2.3	1000	152.02	1.15	1.0	1.0	19	112	88	12.5			
2.4	1004	154.146	1.15	1.0	1.0		112	90	12.5	STOP FILTER RPTT ✓		
~~2.5~~										m.t. 1.01		
~~2.6~~												
~~2.7~~	Rev Page 8 — Plugged nozzle											
~~2.8~~												

COMMENTS: STACK TC reading ~~[illegible]~~ ambient

EPA (Dwt) 235

TRAVERSE POINT NUMBER	CLOCK TIME (24 hr CLOCK) / SAMPLING TIME min/cc.2	GAS METER READING (V_m), ft^3	VELOCITY HEAD (Δp_s), in H_2O	ORIFICE PRESSURE DIFFERENTIAL (ΔH), in H_2O		STACK TEMPERATURE (T_s), °F	DRY GAS METER TEMPERATURE		PUMP VACUUM in Hg	SAMPLE BOX TEMPERATURE °F	IMPINGER TEMPERATURE °F
				DESIRED	ACTUAL		INLET ($T_{m\,in}$), °F	OUTLET ($T_{m\,out}$), °F			
	0 ~~Test~~	154.526									
2.5	1056	156.75	1.1	0.95	0.95	220	98	89	7.0	250	50
2.6	1100	158.763	0.8	0.70	0.70	217	104	90	6.0	250	50
~~2.7~~	Stop change to Port 1 ΔP dropping fast may start to plug and lower on stack										
1.1 ~~2.8~~	1113	161.04	1.1	0.95	0.95	210	100	90	6.0		
1.2	1126	163.71	1.1	0.95	0.95	207	109	91	6.0	Bulb - filter out to manifold	
1.3	1136	165.481	1.1	0.95	0.95	208	110	93	6.0		START 1122
	90	45.484	1.107	0.96		201.438	93.452				

94.1.3

(Dur)
1.17

.05

FIELD DATA

603

11.2.64

PLANT ASARCO (Tacoma)
DATE 9/15/88
SAMPLING LOCATION Roaster Baghouse Inlet
SAMPLE TYPE Arsenic
RUN NUMBER AA-RT-2
OPERATOR D. Wagner
AMBIENT TEMPERATURE
BAROMETRIC PRESSURE 30.21
STATIC PRESSURE, (P_s) -.13 In. H_2O
FILTER NUMBER (s)

PROBE LENGTH AND TYPE 20'
NOZZLE I.D. 3/16"
ASSUMED MOISTURE, %
SAMPLE BOX NUMBER
METER BOX NUMBER
METER $\Delta H_@$
C FACTOR
PROBE HEATER SETTING
HEATER BOX SETTING
REFERENCE Δp

SCHEMATIC OF TRAVERSE POINT LAYOUT

READ AND RECORD ALL DATA EVERY 4 MINUTES

	TRAVERSE POINT NUMBER	SAMPLING TIME, min	CLOCK TIME (24 hr CLOCK)	GAS METER READING (V_m), ft^3	VELOCITY HEAD (Δp_s), in. H_2O	ORIFICE PRESSURE DIFFERENTIAL (ΔH), in. H_2O DESIRED	ACTUAL	STACK TEMPERATURE (T_s), °F	DRY GAS METER TEMPERATURE INLET ($T_{m\,in}$), °F	OUTLET ($T_{m\,out}$), °F	PUMP VACUUM, in. Hg	SAMPLE BOX TEMPERATURE, °F	IMPINGER TEMPERATURE, °F
		0	16:46	167.573									
	1	4	16:50	170.12	1.2	1.05	1.05	200	82	78	10	230	53
	2	8	16:54	172.5	1.4	1.1	1.1	200	79	78	10	250	53
	3	12	16:58	174.9	1.2	1.05	1.05	200	84	78	4	250	53
3	4	16	17:02	177.1	1.2	1.05	1.05	200	96	79	4	250	53
	5	20	17:06	179.4	1.2	1.05	1.05	200	99	80	4	250	53
	6	24	17:10	181.6	1.1	.95	.95	200	100	81	4	250	53
STOP	7	28	17:14	183.6	.92	.80	.80	200	102	82	4	250	52
START	1	32	17:24	186.0	1.4	1.1	1.1	184	92	82	4	250	52
	2	36	17:28	188.4	1.4	1.1	1.1	185	98	83	4	250	52
STOP 4	3	40	17:32	190.8	1.3	1.15	1.15	190	101	84	4	250	53
START 17:54	1	44	17:50	193.5	1.1	.95	.95	150	83	82	7	250	51
	2	48	17:58	195.7	1.2	1.05	1.05	164	90	82	6	250	62
	3	52	18:02	198.1	1.2	1.05	1.05	166	94	82	7	250	64 52
START	4	53	18:03	198.7	1.1	.95	.95	166	98	82	7	250	64 52
	4	56	18:06	200.1	1.1	.95	.95	167	94	82	7	250	64 52
	5	60	18:10	202.3	1.1	.95	.95	170	98	82	7	250	64 52
	6	64	18:14	204.4	.86	.74	.74	170	100	83	5	250	64 53
STOP	7	68	18:18	206.3	.75	.66	.66	195	100	84	5	250	52
START	1	72	18:40	206.3	.66	.56	.56	188	78	80	4	250	53
	1	76	18:44	208.2	.66	.56	.56	193	80	80	4	250	53
	2	80	18:48	209.8	.80	.68	.68	189	84	80	5	250	53
	3	84	18:52	221.369	.75	.65	.65	191	90	90	5	250	53

COMMENTS 53.796 1.07 0.92 181.9 @ 8.50

(1.031)

EPA-Dwn 235

50

6.04

FIELD DATA

PLANT ASARCO BAGHOUSE INLET
DATE 7-16-78
SAMPLING LOCATION INLET
SAMPLE TYPE HS
RUN NUMBER AB-RE-3
OPERATOR PASM
AMBIENT TEMPERATURE 90
BAROMETRIC PRESSURE 20.48
STATIC PRESSURE, (Ps) -2.1 in H2O
FILTER NUMBER (s)

1 2 3 4
0 0 0 0

PROBE LENGTH AND TYPE 20' SS
NOZZLE I.D. 3/16
ASSUMED MOISTURE, % 4
SAMPLE BOX NUMBER
METER BOX NUMBER 2315
METER ΔH@ 1.758
C FACTOR 0.84
PROBE HEATER SETTING 250
HEATER BOX SETTING 250
REFERENCE Δp ~~2~~ H.45

SCHEMATIC OF TRAVERSE POINT LAYOUT

READ AND RECORD ALL DATA EVERY 4 MINUTES

TRAVERSE POINT NUMBER	SAMPLING TIME, min	CLOCK TIME (24 hr CLOCK)	GAS METER READING (V_m), ft³	VELOCITY HEAD (Δp_s), in. H_2O	ORIFICE PRESSURE DIFFERENTIAL (ΔH), in. H_2O DESIRED	ORIFICE PRESSURE DIFFERENTIAL (ΔH), in. H_2O ACTUAL	STACK TEMPERATURE (T_s), °F	DRY GAS METER TEMPERATURE INLET ($T_{m\,in}$), °F	DRY GAS METER TEMPERATURE OUTLET ($T_{m\,out}$), °F	PUMP VACUUM, in. Hg	SAMPLE BOX TEMPERATURE, °F	IMPINGER TEMPERATURE, °F
	0	1650	210.632									
3.1	4	1700	213.785	1.1	1.05	1.05	206	62	63	4	250	50
3.2	8	17:05	215.945	1.3	1.2	1.2	205	70	64	4	250	50
3.3	12	17.09	218.315	1.4	1.3	1.3	198	78	64	4	250	50
3.4	16	17:13	220.88	1.3	1.2	1.2	190	84	64	4	250	50
3.5	20	17:17	223.24	1.2	1.1	1.1	190	90	64	4	250	50
3.6	24	17:21	225.52	1.2	1.1	1.1	192	92	68	4	250	50
3.7	28	17:25	227.682	.88	.83	.83	193	96	70	4	250	50
START → 4.1 1728	32	1732	229.89	1.3	1.2	1.2	210	90	70	4	250	50
4.2	36	17:36	232.25	1.5	1.4	1.4	198	94	72	5	250	50
4.3	40	17:40	234.825	1.4	1.3	1.3	197	100	74	5	250	50
~~4.4~~												
~~4.5~~												
~~4.6~~												
START → 2.1 17:55	44	1759	237.601	1.35	1.3	1.3	—	80	74	5	250	50
2.2	48	1803	240.81	1.3	1.2	1.2	199	74	70	5	250	50
~~2.3~~	~~52~~	~~1807~~		~~1.5~~	~~1.4~~	~~1.4~~	~~211~~	~~84~~	~~72~~	~~5~~	~~250~~	~~50~~
2.3	52	19:17	242.89	1.5	1.4	1.4	211	84	72	5	250	50
2.4	56	19:21	244.67	1.4	1.3	1.3	213	90	72	5	250	50
2.5	60	19:25	247.16	1.3	1.2	1.2	217	94	74	5	250	46
2.6	64	19:29	249.31	.95	.90	.90	225	98	74	5	250	46
2.7	68	19:33	251.499	.86	.83	.83	208	100	76	5	250	46
1.1												

.02 AMBIENT TEST

COMMENTS: LEAK RATE 0.01 cfm @ 10" Hg

EPA-Dull (3)

94.47 60K

TRAVERSE POINT NUMBER	SAMPLING TIME min / CLOCK TIME (24 hr CLOCK)	GAS METER READING (V_m), ft^3	VELOCITY HEAD (Δp_s), in. H_2O	ORIFICE PRESSURE DIFFERENTIAL (ΔH), in H_2O DESIRED	ORIFICE PRESSURE DIFFERENTIAL (ΔH), in H_2O ACTUAL	STACK TEMPERATURE (T_s), °F	DRY GAS METER TEMPERATURE INLET ($T_{m\,in}$), °F	DRY GAS METER TEMPERATURE OUTLET ($T_{m\,out}$), °F	PUMP VACUUM in Hg	SAMPLE BOX TEMPERATURE °F	IMPINGER TEMPERATURE °F
START 1943		251.499									
1.1	72 19:49	253.42	1.05	.98	.98	—	90	80	4	250	47
1.2	76 19:51	255.85	1.3	1.2	1.2	—	100	80	5	250	47
1.3	80 19:55	258.335	1.3	1.2	1.2	205	102	80	5	250	47
	80	46.708	1.24 (1.11)	1.60		203.4	91.83				

EPA (Form 236)
4-72

621

FIELD DATA

PLANT ASARCO
DATE SEPT 24, 1978
SAMPLING LOCATION ARSENIC BAGHOUSE OUTLET
SAMPLE TYPE ARSENIC
RUN NUMBER AA-ABO-1
OPERATOR KELLY
AMBIENT TEMPERATURE 54
BAROMETRIC PRESSURE 30.15
STATIC PRESSURE, (P_s)
FILTER NUMBER (s) 554

PROBE LENGTH AND TYPE
NOZZLE I.D. 3/16
ASSUMED MOISTURE, % 3%
SAMPLE BOX NUMBER
METER BOX NUMBER 2343
METER $\Delta H_@$
C FACTOR
PROBE HEATER SETTING 230
HEATER BOX SETTING 55
REFERENCE Δp 1.55

SCHEMATIC OF TRAVERSE POINT LAYOUT

READ AND RECORD ALL DATA EVERY 8 MINUTES

TRAVERSE POINT NUMBER	SAMPLING TIME, min / CLOCK TIME (24 hr CLOCK)		GAS METER READING (V_m), ft^3	VELOCITY HEAD (Δp_s), in. H_2O	ORIFICE PRESSURE DIFFERENTIAL (ΔH), in. H_2O		STACK TEMPERATURE (T_s), °F	DRY GAS METER TEMPERATURE		PUMP VACUUM, in. Hg	SAMPLE BOX TEMPERATURE, °F	IMPINGER TEMPERATURE, °F
					DESIRED	ACTUAL		INLET ($T_{m\,in}$), °F	OUTLET ($T_{m\,out}$), °F			
	10:06	0	741.178									
1	10:14	8	745.802	1.3	1.6	1.6	172	58	57	-2	230	55
2	10:22	16	750.712	1.3	1.6	1.6	186	64	62	-2	230	55
3	10:30	24	757.257	1.7	2.1	2.1	186	72	66	-1	230	55
4	10:38	32	762.324	1.7	2.1	2.1	186	78	68	-1	230	55
5	10:46	40	768.375	1.6	1.9	1.9	186	80	72	-1	230	55
6	10:54	48	773.632	1.2	1.45	1.45	186	82	74	-1	230	55
Port change												
	11:11	0	774.111		1.1	1.1						
1	11:19	8	778.462	1.3	1.55	1.55	186	72	76	1	230	55
2	11:27	16	783.637	1.3	1.55	1.55	176	84	76	0	230	55
3	11:35	24	789.605	1.6	1.9	1.9	174	88	74	0	230	55
4	11:43	32	795.598	1.6	1.9	1.9	180	86	76	0	230	55
5	11:51	40	802.114	2.1	2.5	2.5	182	84	76	0	250	55
6	11:59	48	809.379	2.3	2.7	2.7	178	88	78	0	250	55
				$\sqrt{\Delta p}$ = 1.241								
				1.54								
			68.20		1.83		180.6	74				

COMMENTS: leak check @ port change < 0.02 cfm pulled 0.05 cf am bleed air to do leak check
leak check @ end of test 0.03 @ 2 in Hg.

EPA-Dwt 235

103.44

628

FIELD DATA

PLANT: ASARCO
DATE: 9/27/78
SAMPLING LOCATION: Arsenic Baghouse Outlet
SAMPLE TYPE: arsenic
RUN NUMBER: AA-ABO-2
OPERATOR: KELLY
AMBIENT TEMPERATURE: 62
BAROMETRIC PRESSURE: 30.15
STATIC PRESSURE, (P_s):
FILTER NUMBER (s): 547

PROBE LENGTH AND TYPE: 3' SS
NOZZLE I.D.: 3/16
ASSUMED MOISTURE, %:
SAMPLE BOX NUMBER:
METER BOX NUMBER: 2363
METER $\Delta H_@$:
C FACTOR:
PROBE HEATER SETTING: 230
HEATER BOX SETTING: 55
REFERENCE Δp: 1.55

SCHEMATIC OF TRAVERSE POINT LAYOUT

READ AND RECORD ALL DATA EVERY 8 MINUTES

TRAVERSE POINT NUMBER	SAMPLING TIME, min	CLOCK TIME (24 hr CLOCK)	GAS METER READING (V_m), ft^3	VELOCITY HEAD (Δp_s), in. H_2O	ORIFICE PRESSURE DIFFERENTIAL (ΔH), in. H_2O DESIRED	ORIFICE PRESSURE DIFFERENTIAL (ΔH), in. H_2O ACTUAL	STACK TEMPERATURE (T_s), °F	DRY GAS METER TEMPERATURE INLET ($T_{m\,in}$), °F	DRY GAS METER TEMPERATURE OUTLET ($T_{m\,out}$), °F	PUMP VACUUM, in. Hg	SAMPLE BOX TEMPERATURE, °F	IMPINGER TEMPERATURE, °F
	4:16	0	412.713									
1	4:24	8	419.976	1.5	2.7	2.7	178	64	60	2	230	55
2	4:32	16	426.345	2.4	2.9	2.9	166	92	64	2	230	55
3	4:40	24	434.234	2.7	3.3	3.3	170	98	68	2	230	55
4	4:48	32	442.043	2.6	3.2	3.2	176	110	74	2	230	55
5	4:56	40	449.737	2.6	3.2	3.2	172	112	78	2	230	55
6	5:04	48	457.920	2.7	3.3	3.3	172	116	82	2	230	55
Port change												
	5:17	0	457.920									
1	5:25	8	465.653	1.7	2.1	2.1	160	110	80	2	230	55
2	5:33	16	472.242	1.7	2.1	2.1	170	112	86	2	230	55
3	5:41	24	478.937	2.1	2.5	2.5	164	118	88	1	230	55
4	5:49	32	487.063	2.7	3.3	3.3	176	120	88	2	230	55
5	5:57	40	495.437	2.8	3.5	3.5	176	122	90	4	230	55
6	6:05	48	503.298	2.3	2.8	2.8	174	120	92	4	230	55
		96	90.585	2.316	2.91		162	93.70				

COMMENTS:

$\sqrt{\Delta p}$: 1.522

EPA-Dwt 235

54

98.28
JS-38.19

FIELD DATA

PLANT Asarco
DATE 7-25-78
SAMPLING LOCATION Arsenic Baghouse Outlet
SAMPLE TYPE Arsenic
RUN NUMBER AA-ARO-3
OPERATOR Kelly \ Rosario
AMBIENT TEMPERATURE 64
BAROMETRIC PRESSURE 30.01
STATIC PRESSURE, (P_s)
FILTER NUMBER (s) 543

PROBE LENGTH AND TYPE 3' SS
NOZZLE I.D. 3/16
ASSUMED MOISTURE, % 3%
SAMPLE BOX NUMBER
METER BOX NUMBER 73.63
METER $\Delta H_@$
C FACTOR
PROBE HEATER SETTING 230
HEATER BOX SETTING
REFERENCE Δp 1.55

SCHEMATIC OF TRAVERSE POINT LAYOUT

READ AND RECORD ALL DATA EVERY 8 MINUTES

TRAVERSE POINT NUMBER	SAMPLING TIME, min	CLOCK TIME (24 hr CLOCK)	GAS METER READING (V_m), ft^3	VELOCITY HEAD (Δp_s), in. H_2O	ORIFICE PRESSURE DIFFERENTIAL (ΔH), in. H_2O DESIRED	ACTUAL	STACK TEMPERATURE (T_s), °F	DRY GAS METER TEMPERATURE INLET ($T_{m\,in}$), °F	OUTLET ($T_{m\,out}$), °F	PUMP VACUUM, in. Hg	SAMPLE BOX TEMPERATURE, °F	IMPINGER TEMPERATURE, °F
	2:23	0	505.162									
1	2:31	8	511.643	1.5	1.8	1.8	160	76	62	1	230	55
2	2:39	16	518.538	2.1	2.5	2.5	164	92	66	2	230	55
3	2:47	24	525.578	2.2	2.6	2.6	164	104	72	2	230	55
4	2:55	32	532.425	2.3	2.7	2.7	160	104	72	2	230	55
5	3:03	40	539.097	2.5	~~2.6~~ 3.0	3.0	160	112	76	2	230	55
6	3:11	48	547.553	2.5	3.0	3.0	160	112	80	2	230	55
	3:18	0	547.795	~~1.2~~	~~1.45~~	~~1.45~~	~~154~~	~~102~~	~~82~~	~~1~~	~~230~~	~~55~~
1	3:26	8	553.774	1.2	1.4	1.45	154	102	82	1	230	55
2	3:34	16	559.067	1.3	1.55	1.55	154	110	84	1	230	55
3	3:42	24	565.215	2.1	2.5	2.5	164	118	86	2	230	55
4	3:50	32	573.142	2.6	3.1	3.1	164	118	86	2	230	55
5	3:58	40	580.017	2.6	3.1	3.1	164	124	90	2	230	55
6	4:06	48	587.410	2.1	2.5	2.5	156	122	92	2	230	55
		96	82.012	2.08	2.48		160.35	93.16				

Port change

Not used

COMMENTS

EPA Form 215

55

99-4 601

FIELD DATA

PLANT AARSCO
DATE 9/18/78
SAMPLING LOCATION ROASTER BAGHOUSE OUT.
SAMPLE TYPE ARSENIC
RUN NUMBER AA-RO-OUT-1
OPERATOR ROONEY, KELLY
AMBIENT TEMPERATURE 57
BAROMETRIC PRESSURE 29.78
STATIC PRESSURE, (P_s)
FILTER NUMBER (s) 509

PROBE LENGTH AND TYPE 10' SS
NOZZLE I.D. 3/16 (.188)
ASSUMED MOISTURE, % 5%
SAMPLE BOX NUMBER
METER BOX NUMBER 2188
METER $\Delta H_@$
C FACTOR
PROBE HEATER SETTING 300
HEATER BOX SETTING 300
REFERENCE Δp 1.6
~~6 Δp = 2.05 ΔH~~

SCHEMATIC OF TRAVERSE POINT LAYOUT

READ AND RECORD ALL DATA EVERY 10 MINUTES

TRAVERSE POINT NUMBER	SAMPLING TIME, min	CLOCK TIME (24 hr CLOCK)	GAS METER READING (V_m), ft^3	VELOCITY HEAD (Δp_s), in. H_2O	ORIFICE PRESSURE DIFFERENTIAL (ΔH), in. H_2O DESIRED	ORIFICE PRESSURE DIFFERENTIAL (ΔH), in. H_2O ACTUAL	STACK TEMPERATURE (T_s), °F	DRY GAS METER TEMPERATURE INLET ($T_{m\,in}$), °F	DRY GAS METER TEMPERATURE OUTLET ($T_{m\,out}$), °F	PUMP VACUUM, in. Hg	SAMPLE BOX TEMPERATURE, °F	IMPINGER TEMPERATURE, °F
	850	0	617.625									60
1	900	10	624.475	1.4	1.6	1.6	190	62	62	1	300	300
2	910	20	630.462	1.5	1.7	1.7	192	80	64	4	300	300
3	920	30	638.48	1.7	1.9	1.9	189	88	78	4	300	300
4	930	40	646.485	2.1	2.3	2.3	188	97	75	5	300	300
5	940	50	654.65	1.95	2.1	2.1	190	102	79	5		
6	950	60	661.832	1.8	1.95	1.95	190	104	84	5		
	0	1015	661.832	1.9	2.1	2.1						
1	10	1025	669.46	1.9	2.1	2.1	187	82	81	5		
2	20	1035	677.27	2.1	2.3	2.3	187	99	82	5		
3	30	1045	684.88	1.9	2.1	2.1	189	104	85	5		
4	40	1055	693.00	2.1	2.3	2.3	189	107	88	5		
5	50	1105	701.175	2.0	2.15	2.15	199	110	91	5		
6	60	1115	708.464	1.8	1.95	1.95	198	111	93	5		
	120		90.839	1.85			190	87				

COMMENTS:

(1.36) 2.04

EPA-Dust 235

FIELD DATA

604

102.56

PLANT ASARCO (Tacoma)
DATE 9/15/78
SAMPLING LOCATION Roaster Baghouse Outlet
SAMPLE TYPE ARSENIC
RUN NUMBER AA-RO-2
OPERATOR DCT/110
AMBIENT TEMPERATURE 65
BAROMETRIC PRESSURE 30.21
STATIC PRESSURE, (P_s) -2.0 "H_2O
FILTER NUMBER (s) 501

PROBE LENGTH AND TYPE 10' SS
NOZZLE I.D. .187
ASSUMED MOISTURE, % 6
SAMPLE BOX NUMBER
METER BOX NUMBER 2188
METER $\Delta H_@$ 1.82
C FACTOR
PROBE HEATER SETTING 300
HEATER BOX SETTING 300
REFERENCE Δp 1.85

SCHEMATIC OF TRAVERSE POINT LAYOUT

READ AND RECORD ALL DATA EVERY 10 MINUTES

TRAVERSE POINT NUMBER	SAMPLING TIME, min	CLOCK TIME (24 hr CLOCK)	GAS METER READING (V_m), ft^3	VELOCITY HEAD (Δp_s), in. H_2O	ORIFICE PRESSURE DIFFERENTIAL (ΔH), in. H_2O DESIRED	ORIFICE PRESSURE DIFFERENTIAL (ΔH), in. H_2O ACTUAL	STACK TEMPERATURE (T_s), °F	DRY GAS METER TEMPERATURE INLET ($T_{m\ in}$), °F	DRY GAS METER TEMPERATURE OUTLET ($T_{m\ out}$), °F	PUMP VACUUM, in. Hg	SAMPLE BOX TEMPERATURE, °F	IMPINGER TEMPERATURE, °F
	0	1700	708.735									
1	10	1710	715.53	1.4	1.65	1.65	189	73	71	8	300	60
2	20	1720	723.24	1.8	2.15	2.15	186	90	73	11		
3	30	1730	731.335	2.0	2.4	2.4	185	102	78	12		
4	40	1740	739.910	2.2	2.6	2.6	185	110	85	14		
5	50	1750	748.54	2.2	2.6	2.6	188	114	89	13		
6	60	1800	756.706	1.95	2.3	2.3	184	116	92	11.5		
	0	1820	756.236	1.7	2.0	2.0	191	91	88	9		
1	10	1830	764.62	1.7	2.0	2.0	194	105	88	9.5		
2	20	1840	772.16									
3	30	1850	779.78	1.8	2.15	2.15	197	109	89	10		
4	40	1900	788.115	2.0	2.4	2.4	191	112	92	13		
5	50	1910	796.44	1.9	2.2	2.2	191	114	93	13		
6	60	1920	804.035	1.6	1.9	1.9	188	115	94	11		
			95.276	1.85	2.20		188.58	95.13				

COMMENTS. Leak Check < .02 cfm (1.36)

EPA (Dun 235

605

102.16

FIELD DATA

PLANT Asarco — Tacoma
DATE 7/16/78
SAMPLING LOCATION Roaster Baghouse Out
SAMPLE TYPE Organic
RUN NUMBER TA-RO-3
OPERATOR Rooney/DePillo
AMBIENT TEMPERATURE 60
BAROMETRIC PRESSURE 30.18
STATIC PRESSURE, (P_s)
FILTER NUMBER (s) 509

PROBE LENGTH AND TYPE 15' SS
NOZZLE I.D. 2.85
ASSUMED MOISTURE, % 6
SAMPLE BOX NUMBER 2/88
METER BOX NUMBER
METER $\Delta H_@$
C FACTOR
PROBE HEATER SETTING 300
HEATER BOX SETTING 300
REFERENCE Δp 1.55

SCHEMATIC OF TRAVERSE POINT LAYOUT

READ AND RECORD ALL DATA EVERY 10 MINUTES

TRAVERSE POINT NUMBER	SAMPLING TIME, min	CLOCK TIME (24 hr CLOCK)	GAS METER READING (V_m), ft^3	VELOCITY HEAD (Δp_s), in. H_2O	ORIFICE PRESSURE DIFFERENTIAL (ΔH), in. H_2O DESIRED	ACTUAL	STACK TEMPERATURE (T_s), °F	DRY GAS METER TEMPERATURE INLET ($T_{m\ in}$), °F	OUTLET ($T_{m\ out}$), °F	PUMP VACUUM, in. Hg	SAMPLE BOX TEMPERATURE, °F	IMPINGER TEMPERATURE, °F
	0	1703	805.884									
1	10	1713	812.165	1.2	1.4	1.4	174	65	62	10	300	00
2	20	1723	819.54	1.8	2.15	2.15	174	80	63	16		
3	30	1733	827.60	2.0	2.35	2.35	181	95	69	20		
4	40	1743	835.89	2.5	2.95	2.95	183	101	75	23		
5	50	1753	844.08	2.3	2.7	2.7	182	100	79	23		
6	60	1803	852.689	1.8	2.2	2.2	181	102	82	23		
	0	1840	852.979	1.4	1.65	1.65						
1	10	1850	860.16				185	75	74	12		
2	20	1900	867.725	1.8	2.1	2.1	182	93	75	15		
3	30	1910	875.82	2.0	2.35	2.35	175	100	78	18		
4	40	1920	884.39	2.2	2.6	2.6	176	105	81	23		
5	50	1930	893.00	2.2	2.6	2.6	183	103	83	23		
6	60	1940	901.550	2.1	2.5	2.5	185	104	85	22		
			95.376	1.94	2.30		180.1	84.5				

COMMENTS: Pre leak check < .02 cfm (1.39)

post leak check ~ .02 cfm

EPA Form 235

FIELD DATA

PLANT ASARCO
DATE 9/15/78
SAMPLING LOCATION ESP OUTLET.
SAMPLE TYPE ARSENIC.
RUN NUMBER AA - ESP-1
OPERATOR TOMCZUK ROSARIO
AMBIENT TEMPERATURE
BAROMETRIC PRESSURE 30.12
STATIC PRESSURE, (P_s)
FILTER NUMBER (s) 500

PROBE LENGTH AND TYPE 15' SS.
NOZZLE I.D. .250
ASSUMED MOISTURE, % 5
SAMPLE BOX NUMBER
METER BOX NUMBER
METER $\Delta H_@$
C FACTOR 1.0
PROBE HEATER SETTING 300°
HEATER BOX SETTING 300°
REFERENCE Δp

SCHEMATIC OF TRAVERSE POINT LAYOUT

READ AND RECORD ALL DATA EVERY 3 MINUTES

TRAVERSE POINT NUMBER	SAMPLING TIME, min	CLOCK TIME (24 hr CLOCK)	GAS METER READING (V_m), ft^3	VELOCITY HEAD (Δp_s), in. H_2O	ORIFICE PRESSURE DIFFERENTIAL (ΔH), in. H_2O DESIRED	ORIFICE PRESSURE DIFFERENTIAL (ΔH), in. H_2O ACTUAL	STACK TEMPERATURE (T_s), °F	DRY GAS METER TEMPERATURE INLET ($T_{m\,in}$), °F	DRY GAS METER TEMPERATURE OUTLET ($T_{m\,out}$), °F	PUMP VACUUM, in. Hg	SAMPLE BOX TEMPERATURE, °F	IMPINGER TEMPERATURE, °F
	0		849.856									
8	3.	4:17	851.58	.25	.81	.81		82	80	2	250	60°
7	6.	4:20	853.4	.25	.81	.81		86	82	2	250	60°
6	9	4:23	854.9	.29	.93	.90		88	83	2	250	60
5	12	4:27	857.1	.32	1.05	1.05		93	83	3	250	60
4	15	4:30	859.0	.33	1.1	1.1		98	84	3	250	60
3	18	4:33	860.7	.35	1.15	1.15		102	85	3	250	60
2	21	4:36	862	.25	.81	.81		108	90	2	250	60
1	23	4:39	864.333	.25	.81	.81		110	92	2	250	60
STOP 8	26	4:54	869.333.	.27	.86	.86	222	96	92	2	250	65
7	2629	4:57	866.2	.29	.93	.93	221	102	92	2	250	55
6	2932	5:00	867.8	.37	1.2	1.2	218	105	93	3	250	50
5	3235	5:03	869.3	.36	1.19	1.15	212	110	94	3	250	49
4	3538	506	871.4	.21	.68	.70	212	112	95	2	250	49
3	3841	509	873.	.23	.74	.74	211	112	95	2	250	50
2	4144	512	874.7	.12	.4	.4	215	112	97	1	250	53
1	47	515	STOP									
1	4450	6:00	876.460	.13	.42	.42	218	96	95	1	250	55
2	4753	6:09	878.0	.19	.62		221	98	96	1	250	55
3	5056	6:12	880.3	.28	.93		224	102	95	2	250	55
4	5359	6:15	882.2	.37	1.2	1.2	230	105	96	3	250	55
5	5662	6:18	884.3	.35	1.16	1.15	231	110	96	3	250	55
6	5965	6:21	886.5	.33	1.1	1.10	232	112	97	3	250	53
7	6268	6:24	888.1	.30	.97		239	114	98		250	52

COMMENTS: LEAK RATE .015 CFM @ 12" Hg BEFORE TEST

105.21

59

Form 2

TRAVERSE POINT NUMBER	SAMPLING TIME min	CLOCK TIME (24 hr CLOCK)	GAS METER READING (V_m), ft^3	VELOCITY HEAD (Δp_s), in H_2O	ORIFICE PRESSURE DIFFERENTIAL (ΔH), in H_2O DESIRED	ORIFICE PRESSURE DIFFERENTIAL (ΔH), in H_2O ACTUAL	STACK TEMPERATURE (T_s), °F	DRY GAS METER TEMPERATURE INLET ($T_{m\,in}$), °F	DRY GAS METER TEMPERATURE OUTLET ($T_{m\,out}$), °F	PUMP VACUUM in Hg	SAMPLE BOX TEMPERATURE, °F	IMPINGER TEMPERATURE, °F
8	6571	6:27	889.362	.21	.65		241	115	99	1	250	50
	STOP.	6:30										
	START	6:53	889.362									
1	6824	6:56	891.0	.37	1.2	1.2	217	106	102		250	60
2	7177	6:59	893.3	.38	1.2	1.2	217	108	102		250	60
3	7480	7:02	895.3	.35	1.15	1.15	213	120	102		250	60
4	7783	7:05	897.4	.30	1.3	1.3	208	120	103		250	60
5	8086	7:08	901.7	.43	1.4	1.4	215	121	104		250	60
6	8389	7:11	903.3	.37	1.2	1.2	216	123	105		250	50
7	8692	7:14	904.9	.12	.38	.38	217	122	105		250	50
8	8995	7:17	905.892	.11	.34	.36	221	121	105		250	50
STOP	9298	7:20	↓									
START		7:38	908.1	.40	1.3	1.3		115	102		250	48
1	9584	7:41	910.	.36	1.15	1.15		118	102		250	48
2	9884	7:44	912.2	.34	1.1	1.1		120	103		250	48
3	10184	7:47	914.2	.35	1.1	1.1		120	104		250	48
4	10469	7:50	915.5	.26	.83	.83		121	104		250	47
5	10746	7:53	917.118	.25	.81	.81		120	104		250	45
STOP		7:56										
	116		67.262	.291	0.945		220.5	10.47				

Δp_s .539

EPA (Dec) 235
5 72

FIELD DATA

PLANT ASARCO
DATE 9/16/78
SAMPLING LOCATION ESP OUTLET
SAMPLE TYPE ARSENIC
RUN NUMBER AA-ESP-2
OPERATOR JONGLEUX
AMBIENT TEMPERATURE
BAROMETRIC PRESSURE 30.18
STATIC PRESSURE, (P_s)
FILTER NUMBER (s) 511

PROBE LENGTH AND TYPE 15' SS
NOZZLE I.D. .372 .250
ASSUMED MOISTURE, %
SAMPLE BOX NUMBER
METER BOX NUMBER
METER ΔH@ 1.87
C FACTOR 1.0
PROBE HEATER SETTING 1.0 70
HEATER BOX SETTING 250
REFERENCE Δp 1.35

SCHEMATIC OF TRAVERSE POINT LAYOUT

READ AND RECORD ALL DATA EVERY 3 MINUTES

TRAVERSE POINT NUMBER	SAMPLING TIME, min	CLOCK TIME (24 hr CLOCK)	GAS METER READING (V_m), ft^3	VELOCITY HEAD (Δp_s), in. H_2O	ORIFICE PRESSURE DIFFERENTIAL (ΔH), in. H_2O DESIRED	ORIFICE PRESSURE DIFFERENTIAL (ΔH), in. H_2O ACTUAL	STACK TEMPERATURE (T_s), °F	DRY GAS METER TEMPERATURE INLET ($T_{m\,in}$), °F	DRY GAS METER TEMPERATURE OUTLET ($T_{m\,out}$), °F	PUMP VACUUM, in. Hg	SAMPLE BOX TEMPERATURE, °F	IMPINGER TEMPERATURE, °F
	0	5:56	918.278									
1	3	5:59	919.8	.23	.76	.76	210	78	74	2.0	250	45
2	6	6:02	921.4	.25	.85	.85	210	88	74	2.0	250	45
3	9	6:05	923.4	.39	1.25	1.25	217	93	76	2.0	250	45
4	12	6:08	925.2	.41	1.4	1.4	224	97	78	2.0	250	45
5	15	6:11	927.1	.40	1.35	1.35	225	100	79	2.0	250	46
6	18	6:14	928.9	.25	.85	.85	216	102	80	2.0	250	46
7	21	6:17	930.7	.27	.9	.9	211	102	82	2.0	250	46
8	24	6:20	932.195	.21	.7	.7	229	102	82	2.0	250	46
	START	6:24										
1	27	6:27	933.4	.12	.4	.4	2	99	85	1.0	250	47
2	30	6:30	934.7	.17	.58	.58	~215	101	86	1.5	250	50
3	33	6:33	936.2	.29	.96	.96		102	87	1.5	250	50
4	36	6:36	937.8	.35	1.2	1.2		105	88	1.5	250	50
5	39	6:39	939.9	.37	1.25	1.25		106	88	2.0	250	50
6	42	6:42	941.9	.34	1.15	1.15		108	91	2.0	250	50
7	45	6:45	944.3	.30	1.0	1.0		109	90	2.0	250	50
8	48	6:48	945.494	.22	.73	.72		109	90	2.0	250	50
		6:52										
1	51	6:55	946.7	.18	.61	.61	~215	103	90	1.0	250	50
2	53	6:58	948.5	.18	.61	.61		104	91	1.0	250	52
3	57	7:01	950.5	.33	1.1	1.1		108	91	2.0	250	48
4	60	7:04	952.5	.41	1.4	1.4		110	92	2.0	250	47
5	63	7:07	954.4	.37	1.25	1.25		111	92	2.0	250	47

COMMENTS

EPA-Form 215

607

TRAVERSE POINT NUMBER	SAMPLING TIME min	CLOCK TIME (24 hr CLOCK)	GAS METER READING (V_m), ft^3	VELOCITY HEAD (Δp_s), in H_2O	ORIFICE PRESSURE DIFFERENTIAL (ΔH), in H_2O DESIRED	ORIFICE PRESSURE DIFFERENTIAL (ΔH), in H_2O ACTUAL	STACK TEMPERATURE (T_s), °F	DRY GAS METER TEMPERATURE INLET ($T_{m\,in}$), °F	DRY GAS METER TEMPERATURE OUTLET ($T_{m\,out}$), °F	PUMP VACUUM, in Hg	SAMPLE BOX TEMPERATURE, °F	IMPINGER TEMPERATURE, °F
6	66	7:10	956.4	.29	.96	.96	~215	111	93	2.0	~250	46
7	69	7:13	958.0	.29	.96	.96		111	93	2.0	~250	46
8	72	7:16	960.130	.26	.85	.85		110	93	1.0	~250	46
		7:21		.12	.40	.4						
1	75	7.24	962.9	.32	1.1	1.1		105	92	2.0	~250	44
2	78	7.27	964.9	.36	1.2	1.2		108	92	2.0	~250	44
3	81	7.30	966.0	.35	1.2	1.2		109	92	2.0	~250	44
4	84	7.33	968.1	.35	1.2	1.2		109	92	2.0	~250	44
5	87	7.36	970.1	.38	1.3	1.3		110	93	2.0	~250	44
6	90	7.39	972.0	.40	1.35	1.3		111	93	2.0	~250	45
7	93	7.42	973.609	.20	.65	.65		111	93			
		7.50										
1	9[illegible]	7.53	975.7	.40	1.35	1.35	206	104	92	2.0	~250	45
2	99	7.56	977.9	.41	1.3	1.3	205	107	92	2.0	~250	45
3	102	7.59	979.9	.30	1.0	1.0	206	110	93	2.0	~250	45
4	105	8.02	981.4	.38	1.3	1.3	208	110	92	2.0	~250	45
5	108	8.05	983.625	.40	1.4	1.4	207	111	93	2.0	~250	45
	108		105.347									
				0.309	1.034		213.69		96.47			
				26								

EPA (Dun) 236
4 72

1 of 2 6008

FIELD DATA

PLANT ASARCO
DATE 9/18/78
SAMPLING LOCATION ESP OUTLET
SAMPLE TYPE ARSENIC
RUN NUMBER AA-ESP-3
OPERATOR JONGLEUX
AMBIENT TEMPERATURE
BAROMETRIC PRESSURE 30.86
STATIC PRESSURE, (P_s) 1.5" H_2O
FILTER NUMBER (s) 03

PROBE LENGTH AND TYPE 15' SS
NOZZLE I.D. .245
ASSUMED MOISTURE, % 5
SAMPLE BOX NUMBER
METER BOX NUMBER 2331
METER $\Delta H_@$ 1.84
C FACTOR 1.0
PROBE HEATER SETTING
HEATER BOX SETTING 300
REFERENCE Δp 1.55

SCHEMATIC OF TRAVERSE POINT LAYOUT

READ AND RECORD ALL DATA EVERY 3 MINUTES

TRAVERSE POINT NUMBER	SAMPLING TIME, min	CLOCK TIME (24 hr CLOCK)	GAS METER READING (V_m), ft^3	VELOCITY HEAD (Δp_s), in. H_2O	ORIFICE PRESSURE DIFFERENTIAL (ΔH), in. H_2O DESIRED	ORIFICE PRESSURE DIFFERENTIAL (ΔH), in. H_2O ACTUAL	STACK TEMPERATURE (T_s), °F	DRY GAS METER TEMPERATURE INLET ($T_{m\,in}$), °F	DRY GAS METER TEMPERATURE OUTLET ($T_{m\,out}$), °F	PUMP VACUUM, in. Hg	SAMPLE BOX TEMPERATURE, °F	IMPINGER TEMPERATURE, °F
	6:24	00	983.867									
1	6:27	03	985.5	.17	.57	.57	179	73	72	2	~250	46
2	6:30	06	986.8	.21	.69	.69	183	75	72	2	~250	45
3	6:33	09	988.4	.27	.90	.90	187	80	73	2	~250	45
4	6:36	12	990.3	.34	1.15	1.15	190	84	73	2	~250	45
5	6:39	15	992.0	.30	1.0	1.0	194	90	74	2	~250	45
6	6:42	18	993.7	.26	.87	.87	190	93	75	3	~250	45
7	6:45	21	995.1	.21	.69	.69	195	96	76	3	~250	45
8	6:48	24	996.365	.17	.57		194	98	77	3	~250	45
	6:52											
1	6:55	27	997.4	.10	.35	.75	183	95	80	3	~250	45
2	6:58	30	998.7	.17	.57	.57	181	97	81	2	~250	45
3	7:01	33	1000.5	.27	.90	.90	186	100	82	2	~250	45
4	7:04	36	1002.2	.31	1.05	1.05	188	104	84	2	~250	45
5	7:07	39	1003.9	.27	.90	.90	197	105	85	2	~250	45
6	7:10	42	1005.4	.25	.84	.84	193	107	85	2	~250	45
7	7:13	45	1007.1	.21	.70	.70	196	108	85	2	~250	45
8	7:17	48	1008.817	.17	.57	.57	198	108	87	2	~250	45
	7:20											
1	7:23	51	1009.9	.11	.37	.37	181	101	87	2	~250	45
2	7:26	54	1011.1	.15	.50	.50	182	103	87	2	~250	45
3	7:29	57	1012.9	.25	.84	.84	184	105	88	2	~250	45
4	7:32	60	1014.6	.35	1.2	1.2	186	108	89	2	~250	45
5	7:35	63	1016.5	.33	1.15	1.15	188	111	89	2	~250	45

COMMENTS: LEAK CHECK PRIOR TO TEST: .0075 CFM @ 5" Hg
[illegible] FINAL LEAK CHECK [illegible] CFM @ [illegible]" Hg

2 of 2 60P

TRAVERSE POINT NUMBER	SAMPLING TIME min	CLOCK TIME (24 hr CLOCK)	GAS METER READING (V_m), ft^3	VELOCITY HEAD (Δp_s), in H_2O	ORIFICE PRESSURE DIFFERENTIAL (ΔH), in H_2O DESIRED	ORIFICE PRESSURE DIFFERENTIAL (ΔH), in H_2O ACTUAL	STACK TEMPERATURE (T_s), °F	DRY GAS METER TEMPERATURE INLET ($T_{m\,in}$), °F	DRY GAS METER TEMPERATURE OUTLET ($T_{m\,out}$), °F	PUMP VACUUM, in Hg	SAMPLE BOX TEMPERATURE, °F	IMPINGER TEMPERATURE, °F
6	7:38	66	1018.1	.29	.96	.96	197	110	89	2	~250	45
7	7:41	69	1020.0	.24	.82	.82	193	110	90	2	~250	45
8	7:44	72	1021.980	.09	.30	.30	191	110	90	2	~250	45
	7:46											
1	7:49	75	1023.1	.28	.94	.94	178	108	91	2	~250	45
2	7:52	78	1024.6	.30	1.0	1.0	183	109	91	3	~250	45
3	7:55	81	1026.5	.33	1.15	1.15	185	110	91	4	~250	44
4	7:58	84	1028.2	.32	1.1	1.1	186	111	91	5	~250	44
5	8:01	87	1030.4	.38	1.3	1.3	193	112	91	6	~250	44
6	8:04	90	1032.3	.34	1.15	1.15	191	113	92	6	~250	44
7	8:07	93	1033.802	.31	1.1	1.1	189	113	92	6	~250	45
	8:14											
1	8:14	96	1036.3	.40	1.4	1.4	192	106	91	7	~250	45
2	8:17	99	1037.8	.35	1.2	1.2	186	111	92	7	~250	45
3	8:20	102	1039.7	.40	1.4	1.4	191	112	92	7	~250	45
4	8:23	105	1041.9	.42	1.45	1.45	185	114	93	7	~250	45
5	8:26	108	1043.116	.17	.57	.57	183	115	94	7	~250	45
		108	59.249	.27	.91		188.3		91.1			

EPA (Dec 23S
1-77

$\sqrt{\Delta p_s}$ = .5[illegible]

9/21/78
B.P. 30.01
Atmos P VA

93%

FIELD DATA

PLANT ASARCO
DATE 9-19-78
SAMPLING LOCATION CONVERTER SLAG RETURN
SAMPLE TYPE ARSENIC
RUN NUMBER AA-CSR-1
OPERATOR MOORE, WAGNER
AMBIENT TEMPERATURE 64
BAROMETRIC PRESSURE ~~30.24~~ 30.11
STATIC PRESSURE, (P_s) -2.15" H_2O
FILTER NUMBER (s)

PROBE LENGTH AND TYPE 3' SS
NOZZLE I.D. 3/16
ASSUMED MOISTURE, % 5
SAMPLE BOX NUMBER
METER BOX NUMBER 2315
METER $\Delta H_@$ 1.758
C FACTOR 0.84
PROBE HEATER SETTING MAX
HEATER BOX SETTING 250°
REFERENCE Δp 1.95

9/20/78 @10"
L Rate - <.005cfm
B.P. 30.08
A. Temp - 59°F
Leak rate flow = 0.098cfm

LEAK RATE = .008cfm @ 10" Hg

SCHEMATIC OF TRAVERSE POINT LAYOUT

READ AND RECORD ALL DATA EVERY _____ MINUTES

TRAVERSE POINT NUMBER	SAMPLING TIME, min	CLOCK TIME (24 hr CLOCK)	GAS METER READING (V_m), ft^3	VELOCITY HEAD (Δp_s), in. H_2O	ORIFICE PRESSURE DIFFERENTIAL (ΔH), in. H_2O DESIRED	ACTUAL	STACK TEMPERATURE (T_s), °F	DRY GAS METER TEMPERATURE INLET ($T_{m\,in}$), °F	OUTLET ($T_{m\,out}$), °F	PUMP VACUUM, in. Hg	SAMPLE BOX TEMPERATURE, °F	IMPINGER TEMPERATURE, °F
	0	2013	259.214									
H.1	1	2014	259.735	.87	.87	.87	70	88	87		250	54
H.2	2.5sec	2025	260.010	0.98	.95	.95	77	84	89			57
H.3	1'23"	2031	260.654	.92	.89	.89	86	85	90			54
H.4	1'27"	~2138	261.479	1.0	.95	.95	111	94	88			58
H.5	1'28"	2155	262.926	1.2	1.15	1.15	96	93	88	2		52
H.6	2'15"	~2211	264.175	1.0	0.95	0.95	89	92	87	2		50
V.0	1'25"	2219	264.273	~~.65~~	~~.62~~	~~.62~~		~~84~~	~~74~~			50
V.1	1'25"	2316	264.904	.65	.62	.62	81	84	74			52
V.2	1'57"	2326	265.958	.95	.90	.90	~~89~~ 105	88	70			54
V.3	1'07"	~2	266.535	.92	.88	.88	100	88	80			54
V.4	1'03"	2933	267.132	1.1	1.05	1.05	94	92	82	2		54
V.5	0'50"	2941	267.648	1.3	1.25	1.25	109	87	79	2		54
V.6	1'20"	2948	268.429	1.2	1.15	1.15	105	85	77	2		54
H.1	0'52"	2053	268.862	.85	.78	.78		87	82	2		54
H.2	1'08"		269.597	.98	.93	.93	102	91	82	2		52
H.3	1'11"		270.125	.89	.85	.85	102	92	84	2		50
H.4	0'55"	2165	270.697	1.05	1.0	1.0	100	91	84			
H.5	1'40"	2209	271.618	1.2	1.15	1.15	88	64	65	2		
H.6	1'42"	2223	272.603	1.2	1.15	1.15	102	76	68	2		
22.55			13.39	1.01	.97	.97	95.3	86.7	80.9			

Total time

2'38"
4'05"
6'33"
8.48
10.13
12'10"
14'07
15'14
1717
1707 +10
1827
1919
2027
2138
2233

9/20/78

72/78

65

83.8

COMMENTS

Δp - 1.095

91.6 +%

6/0

FIELD DATA

PLANT ASARCO
DATE SEPT 15, 1998
SAMPLING LOCATION SLAG TAPPING
SAMPLE TYPE ARSENIC
RUN NUMBER AA-ST-1
OPERATOR KELLY
AMBIENT TEMPERATURE 60
BAROMETRIC PRESSURE ~~30.26~~ 30.11
STATIC PRESSURE, (P_s) -1
FILTER NUMBER (s) 504

PROBE LENGTH AND TYPE 6 SS
NOZZLE I.D. .185
ASSUMED MOISTURE, % 2%
SAMPLE BOX NUMBER
METER BOX NUMBER 2363
METER $\Delta H_@$
C FACTOR
PROBE HEATER SETTING 250
HEATER BOX SETTING
REFERENCE Δp 1.45

SCHEMATIC OF TRAVERSE POINT LAYOUT ΔP 2.6 → 101 → 3.2 Y = ΔH

READ AND RECORD ALL DATA EVERY 10 MINUTES

TRAVERSE POINT NUMBER	CLOCK TIME (24 hr CLOCK)	SAMPLING TIME, min	GAS METER READING (V_m), ft^3	VELOCITY HEAD (Δp_s), in. H_2O	ORIFICE PRESSURE DIFFERENTIAL (ΔH), in. H_2O DESIRED	ACTUAL	STACK TEMPERATURE (T_s), °F	DRY GAS METER TEMPERATURE INLET ($T_{m\,in}$), °F	OUTLET ($T_{m\,out}$), °F	PUMP VACUUM, in. Hg	SAMPLE BOX TEMPERATURE, °F	IMPINGER TEMPERATURE, °F
	1:17	0	172.511									
H1	7:27	10	179.057	1.4	1.85	1.85	60	74	72	11	250	250
2	7:33	16	183.799	1.4	1.85	1.88	60	94	72	11	250	250
Stop 16 min												
2	8:13	16	183.979	1.4	1.85	1.85	60	74	76	11	250	250
Start												
2	8:17	20	186.975	1.4	1.85	1.85	60	74	76	11	250	250
3	8:27	30	194.602	1.4	1.85	1.85	60	84	72	11	250	250
4	8:30	33	196.735	1.4	1.85	1.85	60	104	76	11	250	250
Stop 17 min												
4	9:10	33	196.735	~~2.1~~	~~3.1~~	~~3.1~~						
Start												
4	9:17	40	200.623	2.1	3.1	3.1	60	92	70	14	250	250
5	9:23	46	206.118	1.7	2.4	2.4	60	88	78	14	250	250
Stop 17 min												
5	11:13	46	206.118	~~1.7~~	~~2.4~~	~~2.4~~	~~60~~	~~86~~	~~82~~	~~14~~	2	
Start												
5	11:20	50	221.668	1.7	2.4	2.4	60	86	82	14	250	250
6	11:30	60	220.792	1.7	2.4	2.4	60	92	86	14	250	250
V	~~11:54~~	~~0~~	220.792									
1	12:04	10	228.931	3.1	4.5	3.0	80	82	72	22	250	250
2	12:07	13	231.765	2.4	3.2	3.0	75	106	74	22	250	250
Stop 13 min												
2	12:30	13	231.765	~~2.7~~	~~3.5~~	~~3.0~~						
Start												
2	12:37	20	237.195	2.7	3.5	3.0	75	78	72	22	250	250
3	12:42	27	241.907									
Stop 17 min												

COMMENTS:

EPA (Dun 235 Pulled 0.993 cf of ambient to find plug in system (in equivalent)

610

TRAVERSE POINT NUMBER	CLOCK TIME (24 hr CLOCK)	SAMPLING TIME min	GAS METER READING (V_m), ft^3	VELOCITY HEAD (Δp_s), in H_2O	ORIFICE PRESSURE DIFFERENTIAL (ΔH), in H_2O DESIRED	ORIFICE PRESSURE DIFFERENTIAL (ΔH), in H_2O ACTUAL	STACK TEMPERATURE (T_s), °F	DRY GAS METER TEMPERATURE INLET ($T_{m\,in}$), °F	DRY GAS METER TEMPERATURE OUTLET ($T_{m\,out}$), °F	PUMP VACUUM in Hg	SAMPLE BOX TEMPERATURE °F	IMPINGER TEMPERATURE °F
3	1:08	27	241.907	1.7	2.4	2.4	75	98	76	6	250	250
3	11 10	30	246.545	1.7	2.4	2.4	75	98	76	6	250	250
4	11 20	40	251.062	2.4	3.2	3.2	75	98	76	6	250	250
5	11:22	42	255.027	2.4	3.2	3.2	75	98	76	6	250	250
5	11.44	42	255.027									
5	11:52	50	262.093	2.5	3.0	3.0	75	76	72	7	250	250
6	1.55	53	265.623	2.5	3.0	3.0	75	94	76	7	250	250
6	2:23	53	265.623									
6	2:30	60	271.604	2.5	3.0	3.0	75	70	68	7	250	250
				$\sqrt{\Delta p_s}$ = 1.418								
			19.073	2.01	2.8		67.63	82.65				

Jul 23 [illegible] at [illegible] mm mercury

FIELD DATA

95.97%

PLANT ASARCO
DATE [illegible] - Sept 20, 1978
SAMPLING LOCATION SLAG TAPPING
SAMPLE TYPE ARSENIC
RUN NUMBER AA-ST-2
OPERATOR [illegible]
AMBIENT TEMPERATURE 60
BAROMETRIC PRESSURE [illegible]
STATIC PRESSURE, (P_s) [illegible]
FILTER NUMBER(s) [illegible]

PROBE LENGTH AND TYPE 5' SS
NOZZLE I.D. .185
ASSUMED MOISTURE, % 2%
SAMPLE BOX NUMBER
METER BOX NUMBER [illegible]
METER $\Delta H_@$
C FACTOR
PROBE HEATER SETTING [illegible]
HEATER BOX SETTING [illegible]
REFERENCE Δp [illegible]

SCHEMATIC OF TRAVERSE POINT LAYOUT

READ AND RECORD ALL DATA EVERY 10 MINUTES

TRAVERSE POINT NUMBER	SAMPLING TIME, min	CLOCK TIME (24 hr CLOCK)	GAS METER READING (V_m), ft³	VELOCITY HEAD (Δp_s), in. H_2O	ORIFICE PRESSURE DIFFERENTIAL (ΔH), in. H_2O DESIRED	ACTUAL	STACK TEMPERATURE (T_s), °F	DRY GAS METER TEMPERATURE INLET ($T_{m\,in}$), °F	OUTLET ($T_{m\,out}$), °F	PUMP VACUUM, in. Hg	SAMPLE BOX TEMPERATURE, °F	IMPINGER TEMPERATURE, °F
			278.439									
1	7.23	16	288.543	2.1	2.7	2.7	78	62	64	10	[illegible]	[illegible]
2	1.29	16	291.336	1.45	1.6	1.6	114	98	[illegible]	5	230	[illegible]
2	7.54	16	291.336	1.45								
2	7.58	20	293.443	1.45	1.6	1.6	92	76	68	5	230	[illegible]
3	8.08	30	301.175	2.0	2.6	2.6	102	82	76	5	230	[illegible]
4	8.12	[illegible]	305.647	1.45	1.6	1.6	143	98	70	6	230	[illegible]
4	8.35	34	305.647									
4	8.44	40	309.223	1.7	2.7	2.2	110	74	76	5	230	55
5	8.52	48	314.485	1.45	1.6	1.6	123	84	72	5	230	55
											230	[illegible]
5	9.21	48	314.485									
5	9.23	50	316.247	1.45	1.6	1.6	86	92	76	5	230	55
6	9.33	60	323.511	1.7	2.7	2.7	94	102	76	5	230	55
	10:16	0	323.511									
1	10:26	10	328.612	1.2	1.45	1.45	100	64	58	4	230	55
2	10:32	16	332.377	1.2	1.45	1.45	138	78	62	4	230	55
2	12:03	16	332.377									
2	12:07	20	334.317	1.3	1.7	1.7	74	84	68	5	230	55
3	12:17	30	343.203	1.7	2.3	2.3	92	92	74	6	230	55

COMMENTS: [illegible] - Vertical Portion of testing completed 21 Sept 78

EPA-Dun 239

TRAVERSE POINT NUMBER	SAMPLING TIME min / CLOCK TIME (24 hr CLOCK)	GAS METER READING (V_m), ft^3	VELOCITY HEAD (Δp_s), in H_2O	ORIFICE PRESSURE DIFFERENTIAL (ΔH), in H_2O DESIRED	ORIFICE PRESSURE DIFFERENTIAL (ΔH), in H_2O ACTUAL	STACK TEMPERATURE (T_s), °F	DRY GAS METER TEMPERATURE INLET ($T_{m\,in}$), °F	DRY GAS METER TEMPERATURE OUTLET ($T_{m\,out}$), °F	PUMP VACUUM, in Hg	SAMPLE BOX TEMPERATURE, °F	IMPINGER TEMPERATURE, °F
4	~~[illegible]~~ 36	348.786	2.1	2.7	2.7	130	102	86	7	250	55
4	36	348.786									
1	[illegible]	[illegible]	[illegible]	[illegible]	[illegible]	[illegible]	[illegible]	[illegible]	[illegible]	[illegible]	[illegible]
	[illegible]	[illegible]	[illegible]	[illegible]	[illegible]	[illegible]	[illegible]	[illegible]	[illegible]	[illegible]	[illegible]
	[illegible]	[illegible]	[illegible]	[illegible]	[illegible]	[illegible]	[illegible]	[illegible]	[illegible]	[illegible]	[illegible]
							1	1			
	111 min	84.35 cf	1.71	2.15		106	77.12				
	111	84.349	1.71								

Stop 19 min start

(2.3 / 2.3 / 2.3 / 2.3)

(1.71 .30)

FIELD DATA

91.78%

PLANT ASARCO
DATE 7/20/88
SAMPLING LOCATION SOLVAY STACK
SAMPLE TYPE ARSENIC
RUN NUMBER AA-ST-3
OPERATOR KELLY
AMBIENT TEMPERATURE
BAROMETRIC PRESSURE 30.01
STATIC PRESSURE, (P_s) -7 in H_2O
FILTER NUMBER (s) 405

PROBE LENGTH AND TYPE 5' OSS
NOZZLE I.D. .185
ASSUMED MOISTURE, % 2%
SAMPLE BOX NUMBER
METER BOX NUMBER 2363
METER $\Delta H_@$
C FACTOR
PROBE HEATER SETTING 230
HEATER BOX SETTING 250
REFERENCE Δp 1.45

SCHEMATIC OF TRAVERSE POINT LAYOUT

READ AND RECORD ALL DATA EVERY 12 MINUTES

TRAVERSE POINT NUMBER	SAMPLING TIME, min	CLOCK TIME (24 hr CLOCK)	GAS METER READING (V_m), ft^3	VELOCITY HEAD (Δp_s), in. H_2O	ORIFICE PRESSURE DIFFERENTIAL (ΔH), in. H_2O DESIRED	ACTUAL	STACK TEMPERATURE (T_s), °F	DRY GAS METER TEMPERATURE INLET ($T_{m\,in}$), °F	OUTLET ($T_{m\,out}$), °F	PUMP VACUUM, in. Hg	SAMPLE BOX TEMPERATURE, °F	IMPINGER TEMPERATURE, °F
	358	@	363.016									
H 1	4:03	5	366.503	1.65	2.05	2.0	96	74	66	6	230	55
2	4:08	10	369.345	1.6	2.0	2.0	112	80	68	6	230	55
3	4:12	14	372.697	1.7	2.3	2.3	140	90	80	6	230	55
Stop 14 min												
3	4:37	14	372.697									
Start 3	4:38	15	373.625	2.0	2.1	2.1	78	78	72	6	230	55
4	4:43	20	377.625	1.7	2.3	2.3	93	78	72	6	230	55
5	4:48	25	380.721	1.45	1.65	1.65	126	86	76	6	230	55
6	4:53	30	384.253	1.3	1.7	1.7	139	94	78	5	230	55
Stop Finish												
1	5:17	0	384.253									
Start 1	5:22	5	387.336	1.8	2.4	2.4	100	74	70	6	230	55
2	5:27	10	391.154	1.2	1.5	1.5	112	80	76	7	230	55
3	5:32	15	395.223	1.0	1.3	1.3	124	92	76	5	230	55
Stop 20 min Start 4												
4	5:55	16	395.223	2.4	3.1	3.1		76	68	8	230	55
4	6:00	20	399.473	2.4	3.1	3.1	100	76	68	8	230	55
5	6:05	25	402.762	2.4	3.1	3.1	120	85	70	9	230	55
6	6:08	28	406.824	2.4	3.1	3.1	123	98	76	9	230	55
Stop 13 min Start												
6	7:40	28	406.924	2.5	3.3	3.3						
6	7:42	30	408.748	2.5	3.3	3.3	195	66	62	8	230	55

COMMENTS: 60 min 45.73 cf. 1.84 2.39 118.8 76.61

EPA-Dun 235

70

620

FIELD DATA

PLANT ASARCO
DATE 7-24-78
SAMPLING LOCATION ARSENIC BAGHOUSE INLET KITCHEN
SAMPLE TYPE ARSENIC
RUN NUMBER AA-AK-1
OPERATOR D. Wagner T. Rooney
AMBIENT TEMPERATURE
BAROMETRIC PRESSURE 30.15
STATIC PRESSURE, (P_s)
FILTER NUMBER (s) 552

PROBE LENGTH AND TYPE
NOZZLE I.D. 3/16
ASSUMED MOISTURE, % 3%
SAMPLE BOX NUMBER
METER BOX NUMBER 2188
METER $\Delta H_@$ 1.82
C FACTOR
PROBE HEATER SETTING
HEATER BOX SETTING 300
REFERENCE Δp 1.55

SCHEMATIC OF TRAVERSE POINT LAYOUT

READ AND RECORD ALL DATA EVERY 4 MINUTES 24 PTS.

	TRAVERSE POINT NUMBER	SAMPLING TIME, min	CLOCK TIME (24 hr CLOCK)	GAS METER READING (V_m), ft^3	VELOCITY HEAD (Δp_s), in. H_2O	ORIFICE PRESSURE DIFFERENTIAL (ΔH), in. H_2O DESIRED	ORIFICE PRESSURE DIFFERENTIAL (ΔH), in. H_2O ACTUAL	STACK TEMPERATURE (T_s), °F	DRY GAS METER TEMPERATURE INLET ($T_{m\,in}$), °F	DRY GAS METER TEMPERATURE OUTLET ($T_{m\,out}$), °F	PUMP VACUUM, in. Hg	SAMPLE BOX TEMPERATURE, °F	IMPINGER TEMPERATURE, °F
		0	10:06	137.193									
	1	4	10:10	140.6	1.05	1.25	1.25	130	58	55	6	260	60
	2	8	10:14	143.0	1.05	1.25	1.25	132	68	56	5	250	60
	3	12	10:18	145.8	1.50	1.8	1.8	135	72	57	5	250	60
	4	16	10:22	148.6	1.50	1.8	1.8	135	78	58	5	250	60
	5	20	10:26	151.6	1.70	2.0	2.0	135	81	60	5	250	60
	6	24	10:30	154.6	1.70	2.0	2.0	135	84	62	5.5	250	60
	7	28	10:34	157.6	1.70	2.0	2.0	135	88	64	5.5	250	60
	8	32	10:38	159.8	1.70	2.0	2.0	135	89	65	5.5	250	60
	9	36	10:42	162.8	1.6	1.8	1.8	135	90	67	5.5	250	60
	10	40	10:46	165.8	1.6	1.8	1.8	135	92	69	5.5	250	60
	11	44	10:50	168.8	1.5	1.8	1.8	135	94	61	5.5	250	60
STOP	12	48	10:54	171.701	1.5	1.8	1.8	135	95	62	5.5	250	60
START		0	11:00	171.755									
	1	4	11:04	174.8	1.8	2.1	2.1	127	77	62	6	250	60
	2	8	11:08	177.8	1.8	2.1	2.1	130	82	62	6	250	60
	3	12	11:22	180.9	1.8	2.1	2.1	131	86	62	6	250	60
	4	16	11:26	184.0	1.85	2.2	2.2	130	91	62	6	250	60
	5	20	11:30	187.1	1.7	2.0	2.0	130	93	63	6	250	60
	6	24	11:34	190.1	1.7	2.0	2.0	130	94	64	6	250	60
	7	28	11:38	193.1	1.6	1.95	1.95	131	93	64	6	250	60
	8	32	11:42	196.0	1.3	1.55	1.55	136	83	65	6	250	60
	9	36	11:46	199.0	1.7	2.0	2.0	130	92	75	6	250	60
	10	40	11:50	201.5	1.05	1.25	1.25	132	93	75	6	250	60

COMMENTS: Leak check between port changes less than .01 cfm. DW

71

6 2 0

TRAVERSE POINT NUMBER	SAMPLING TIME min	CLOCK TIME (24 hr CLOCK)	GAS METER READING (V_m), ft^3	VELOCITY HEAD (Δp_s), in H_2O	ORIFICE PRESSURE DIFFERENTIAL (ΔH), in H_2O		STACK TEMPERATURE (T_s), °F	DRY GAS METER TEMPERATURE		PUMP VACUUM in Hg	SAMPLE BOX TEMPERATURE, °F	IMPINGER TEMPERATURE °F
					DESIRED	ACTUAL		INLET ($T_{m\,in}$), °F	OUTLET ($T_{m\,out}$), °F			
11	44	11:54	203.9	.95	1.1	1.1	133	93	77	6.5	250	60
12	48	11:58	205.793	.55	.68	.68	131	92	78	6.3	250	60
	96		68.6	1.50	1.769		132.6		75.0			
				$\sqrt{\Delta p}$	1.22							

EPA (Out) 236

97.23%

622

FIELD DATA

PLANT ASARCO
DATE 6/24/78
SAMPLING LOCATION Arsenic kitchen inlet
SAMPLE TYPE arsenic
RUN NUMBER AA - AK - 2
OPERATOR POWELL / RODNEY / WAGNER
AMBIENT TEMPERATURE 65
BAROMETRIC PRESSURE 32.15
STATIC PRESSURE, (P_s)
FILTER NUMBER (s) 549

PROBE LENGTH AND TYPE 6' SS
NOZZLE I.D. 3/16
ASSUMED MOISTURE, % 3%
SAMPLE BOX NUMBER 2188
METER BOX NUMBER 2188
METER $\Delta H_@$ 1.82
C FACTOR 1.0
PROBE HEATER SETTING
HEATER BOX SETTING 300°
REFERENCE Δp 1.55

SCHEMATIC OF TRAVERSE POINT LAYOUT

READ AND RECORD ALL DATA EVERY 4 MINUTES

TRAVERSE POINT NUMBER	SAMPLING TIME, min	CLOCK TIME (24 hr CLOCK)	GAS METER READING (V_m), ft^3	VELOCITY HEAD (Δp_s), in. H_2O	ORIFICE PRESSURE DIFFERENTIAL (ΔH), in. H_2O DESIRED	ACTUAL	STACK TEMPERATURE (T_s), °F	DRY GAS METER TEMPERATURE INLET ($T_{m\,in}$), °F	OUTLET ($T_{m\,out}$), °F	PUMP VACUUM, in. Hg	SAMPLE BOX TEMPERATURE, °F	IMPINGER TEMPERATURE, °F
	0	4:17	206.605									
1	4	4:21	208.60	.78	.91	.91	128	65	66	3.0	250	50
2	8	4:25	211.6	1.6	1.9	1.9	129	66	68	5.0	250	50
3	12	4:29	214.5	1.8	2.15	2.15	129	68	80	6.0	250	50
4	16	4:34	218.1	2.1	2.5	2.5	138	70	87	7.0	250	50
5	20	4:38	222.15	2.2	2.6	2.6	137	72	90	7.0	250	50
6	24	4:42	225.10	1.5	1.8	1.8	137	96	74	7.0	250	50
7	28	4:46	228.00	1.7	2.0	2.0	136	99	78	7.0	250	50
8	32	4:50	230.910	1.6	1.86	1.86	138	100	78	10.0	250	50
9	36	4:54	233.510	1.2	1.4	1.4	139	100	80	9.0	250	50
10	40	4:58	236.00	1.3	1.6	1.6	139	100	80	9.0	250	50
11	44	502	238.550	1.2	1.4	1.4	139	102	82	10.0	250	50
12	48	506	240.87	.95	1.1	1.1	140	102	82	10.0	250	50
	0	5:17	241.970									
1	4	5:21	244.5	2.9	3.5	3.1	133	86	80	22.0	250	50
2	8	5:25	248.4	2.9	3.35	3.35	135	94	80	22.0	250	50
3	12	5:29	252.4	3.0	3.6	3.6	135	100	80	22.0	250	50
4	16	5:33	256.4	2.9	3.5	3.5	136	102	81	22.0	250	50
5	20	5:37	260.5	2.8	3.3	3.3	140	106	83	19.0	250	50
6	24	5:41	264.4	2.6	3.1	3.1	138	110	84	14.0	250	50
7	28	5:45	268.4	2.9	3.5	3.5	136	112	86	15.0	250	50
8	32	5:49	272.0	2.2	2.6	2.6	140	112	87	10.0	250	50
9	36	5:53	275.2	1.8	2.15	2.15	142	109	88	7.5	250	50
10	40	5:57	278.3	1.7	2.05	2.05	141	108	88	7.5	250	50
						1.4	135	108	80	5.5	250	50

COMMENTS: Pitot leak check < 0.015 cfm @ 10 in. Hg Leak test after port change = Less than .01 cfm

EPA-Dust 235

73

94.88

FIELD DATA

PLANT Asarco
DATE 9-25-78
SAMPLING LOCATION Arsenic Kitchen (BAGHOUSE INLET)
SAMPLE TYPE Arsenic
RUN NUMBER AA-AK-3
OPERATOR D. Wagner \ T. Raney
AMBIENT TEMPERATURE 68
BAROMETRIC PRESSURE 30.01
STATIC PRESSURE, (P_s) -2.6 "H_2O
FILTER NUMBER (s) 544

PROBE LENGTH AND TYPE 5' SS
NOZZLE I.D. 3/16" AREA .00019
ASSUMED MOISTURE, % 3%
SAMPLE BOX NUMBER 2188
METER BOX NUMBER 2188
METER $\Delta H_@$ 1.82
C FACTOR 1
PROBE HEATER SETTING 300°F
HEATER BOX SETTING 300°F
REFERENCE Δp 1.55

SCHEMATIC OF TRAVERSE POINT LAYOUT

READ AND RECORD ALL DATA EVERY 4 MINUTES

TRAVERSE POINT NUMBER	SAMPLING TIME, min	CLOCK TIME (24 hr CLOCK)	GAS METER READING (V_m), ft^3	VELOCITY HEAD (Δp_s), in. H_2O	ORIFICE PRESSURE DIFFERENTIAL (ΔH), in. H_2O DESIRED	ORIFICE PRESSURE DIFFERENTIAL (ΔH), in. H_2O ACTUAL	STACK TEMPERATURE (T_s), °F	DRY GAS METER TEMPERATURE INLET ($T_{m\,in}$), °F	DRY GAS METER TEMPERATURE OUTLET ($T_{m\,out}$), °F	PUMP VACUUM, in. Hg	SAMPLE BOX TEMPERATURE, °F	IMPINGER TEMPERATURE, °F
	0	221	283.755									
1	4	225	285.60	.78	.95	.95	139	68	64	5	250	50
2	8	229	288.70	1.6	2.1	2.1	139	72	68	10	250	50
3	12	233	291.850	1.5	1.8	1.8	140	80	64	9	250	50
4	16	237	294.90	2.0	2.4	2.4	140	86	70	11	250	50
5	20	241	298.20	1.9	2.3	2.3	141	90	76	11	250	50
6	24	245	301.25	2.0	2.5	2.5	139	94	68	11	250	50
7	28	249	304.910	2.5	3.0	3.0	140	98	74	15	250	50
8	32	253	309.65	2.5	3.0	3.0	140	98	78	18	250	50
9	36	257	312.400	2.5	3.0	3.0	138	100	78	18	250	50
10	40	301	316.100	2.5	3.0	3.0	140	102	78	18	250	50
11	44	305	319.90	2.5	3.0	3.0	140	102	82	18	250	50
12	48	309	323.400	2.1	2.6	2.6	140	104	80	15	250	50
PORT CHANGE (0)		318	323.620									
1	4	322	327.400	1.8	2.1	2.1	139	90	80	7	250	50
2	8	326	330.00	2.6	3.2	3.2	140	100	82	16	250	50
3	12	330	339.00	2.0	2.4	2.4	138	104	84	14	250	55
4	16	334	336.850	2.1	2.6	2.6	138	102	82	12	250	55
5	20	338	340.300	2.5	3.0	3.0	139	102	80	17	250	55
6	24	342	344.00	2.4	3.0	3.0	142	110	86	15	250	55
7	28	346	347.400	2.4	3.0	3.0	140	109	88	17	250	55
8	32	350	351.600	2.3	2.5	2.5	138	106	90	14	250	55
9	36	354	355.00	2.4	3.0	3.0	140	110	90	17	250	55
10	40	358	358.70	2.1	2.4	2.4	140	110	81	17	250	55

COMMENTS: Initial leak test = less than .01 cfm DW Leak check at port change = <.01 cfm

EPA-Dwn 235

Post leak check <.01 cfm

ASARCO AA-AK3

TRAVERSE POINT NUMBER	SAMPLING TIME min	CLOCK TIME (24 hr CLOCK)	GAS METER READING (V_m), ft^3	VELOCITY HEAD (Δp_s), in H_2O	ORIFICE PRESSURE DIFFERENTIAL (ΔH), in H_2O DESIRED	ORIFICE PRESSURE DIFFERENTIAL (ΔH), in H_2O ACTUAL	STACK TEMPERATURE (T_s), °F	DRY GAS METER TEMPERATURE INLET ($T_{m\,in}$), °F	DRY GAS METER TEMPERATURE OUTLET ($T_{m\,out}$), °F	PUMP VACUUM, in Hg	SAMPLE BOX TEMPERATURE, °F	IMPINGER TEMPERATURE, °F
11	44	402	362.30	2.1	2.6	2.6	143	110	88	14	250	55
12	48	406	365.550	1.9	2.2	2.2	142	112	88	14	250	55
	96		81.575	2.212	2.5	1.48	139.8	81.146				
				$\sqrt{\Delta p_s}$ =								

EF 236

6/9

FIELD DATA

PLANT ASARCO
DATE 9/24/78
SAMPLING LOCATION ARSENIC BACHOUSE INLET - METALLIC
SAMPLE TYPE ARSENIC
RUN NUMBER AA-MA-1
OPERATOR JENGLEUX / PAGAN
AMBIENT TEMPERATURE 55
BAROMETRIC PRESSURE 30.15
STATIC PRESSURE, (P_s)
FILTER NUMBER (s) 553

PROBE LENGTH AND TYPE 3' S.S
NOZZLE I.D. .308
ASSUMED MOISTURE, %
SAMPLE BOX NUMBER
METER BOX NUMBER 2331
METER $\Delta H_@$
C FACTOR 1.0
PROBE HEATER SETTING —
HEATER BOX SETTING 250
REFERENCE Δp .25

SCHEMATIC OF TRAVERSE POINT LAYOUT

READ AND RECORD ALL DATA EVERY 8 MINUTES

TRAVERSE POINT NUMBER	SAMPLING TIME, min	CLOCK TIME (24 hr CLOCK)	GAS METER READING (V_m), ft^3	VELOCITY HEAD (Δp_s), in. H_2O	ORIFICE PRESSURE DIFFERENTIAL (ΔH), in. H_2O DESIRED	ACTUAL	STACK TEMPERATURE (T_s), °F	DRY GAS METER TEMPERATURE INLET ($T_{m\,in}$), °F	OUTLET ($T_{m\,out}$), °F	PUMP VACUUM, in. Hg	SAMPLE BOX TEMPERATURE, °F	IMPINGER TEMPERATURE, °F
	10:07	00	043.359									
☆ V 1	10:15	08	048.54	.17	1.3	1.3	227	56	56	5	250	40
2	10:23	16	053.5	.22	1.6	1.6	252	73	58	6	250	45
3	10:31	24	059.45	.26	2.0	2.0	255	80	60	7	250	45
4	10:39	32	066.6	.35	2.7	2.7	255	91	65	10	250	50
5	10:47	40	075.4	.43	3.3	3.3	213	101	71	12	250	52
6	10:55	48	083.658	.52	4.0	4.0	249	110	80	17	250	55
	11:10											
H 6	11:18	54	089.9	.28	2.1	2.1	251	80	75	6	250	50
5	11:26	62	097.1	.35	2.7	2.7	254	92	76	10	250	55
4	11:34	70	104.3	.33	2.6	2.6	251	102	78	10	250	55
3	11:42	78	111.9	.30	2.3	2.3	249	104	80	9	250	58
2	11:50	86	119.5	.47	3.7	3.7	233	101	80	17	250	60
1	11:58	94	128.738	.53	4.1	4.1	225	108	80	20	250	60
		94	85.379	.351	2.7		242	81.54				

COMMENTS:

$\sqrt{\Delta p}$ = .592

EPA-Dwt 235

76

~~6.19~~
6.24

FIELD DATA

PLANT ASARCO
DATE 9/24/78
SAMPLING LOCATION Arsenic Baghouse inlet - Metallic
SAMPLE TYPE arsenic
RUN NUMBER AA-MA-2
OPERATOR JONGLEUX / PAGAN
AMBIENT TEMPERATURE 62
BAROMETRIC PRESSURE 30.15
STATIC PRESSURE, (P_s) 2.1 in H_2O
FILTER NUMBER (s) 547 / 213

PROBE LENGTH AND TYPE 3' S.S.
NOZZLE I.D. .308
ASSUMED MOISTURE, %
SAMPLE BOX NUMBER
METER BOX NUMBER 2331
METER ΔH@
C FACTOR 1.0
PROBE HEATER SETTING —
HEATER BOX SETTING 250
REFERENCE Δp 0.25

SCHEMATIC OF TRAVERSE POINT LAYOUT

READ AND RECORD ALL DATA EVERY 8 MINUTES

TRAVERSE POINT NUMBER	SAMPLING TIME, min	CLOCK TIME (24 hr CLOCK)	GAS METER READING (V_m), ft^3	VELOCITY HEAD (Δp_s), in. H_2O	ORIFICE PRESSURE DIFFERENTIAL (ΔH), in. H_2O DESIRED	ACTUAL	STACK TEMPERATURE (T_s), °F	DRY GAS METER TEMPERATURE INLET ($T_{m\,in}$), °F	OUTLET ($T_{m\,out}$), °F	PUMP VACUUM, in. Hg	SAMPLE BOX TEMPERATURE, °F	IMPINGER TEMPERATURE, °F
	4:17		131.136									
H 1	4:25	08	137.7	.37	2.8	2.8	219	72	65	15	250	40
2	4:33	16	146.2	.57	3.9	3.4	234	82	68	21	250	45
3	4:41	24	154.74	.50	3.9	3.5	234	100	70	21	250	56
4	4:49	32	162.51	.51	3.9	3.5	239	106	78	21	250	56
5	4:57	40	170.91	.55	4.3	3.5	233	110	80	21	250	56
6	5:05	48	179.551	.60	4.8	3.5	231	114	84	21	250	56
START →	5:18		180.199 Leak check .02		1.7	1.7	232	80	80	6	250	56
V 1	5:26	56	185.71	.22	1.7	1.7	232	80	80	6	250	56
2	5:34	64	193.38	.35	2.7	2.7	230	100	80	14	250	42
3	5:42	72	201.34	.38	2.8	2.8	234	110	82	14	250	46
4	5:50	80	209.75	.55	4.0	4.0	250	110	84	21	250	46
5	5:58	88	218.44	.48	3.5	3.5	229	112	84	21	250	46
6	6:06	96	227.801	.56	2.4	2.4	233	116	88	21	250	46
	96		96.650	.40	3.4		233.2	89.7				

COMMENTS Leak check at point change <0.01 @ 20 in Hg Reading on dry gas meter at end of run (180.197 / 22.35 / .642)

77

100.8

FIELD DATA

PLANT Asarco
DATE 9-25-78
SAMPLING LOCATION Metallic Arsenic
SAMPLE TYPE Arsenic
RUN NUMBER MA-mA-3
OPERATOR B. Jongleux / R. Hagan
AMBIENT TEMPERATURE 57
BAROMETRIC PRESSURE 30.01
STATIC PRESSURE, (P_s) 2.8
FILTER NUMBER (s) 545

PROBE LENGTH AND TYPE 3' SS
NOZZLE I.D. 1/4" .248
ASSUMED MOISTURE, % 3%
SAMPLE BOX NUMBER
METER BOX NUMBER 2331
METER $\Delta H_@$
C FACTOR 1.0
PROBE HEATER SETTING
HEATER BOX SETTING 250°F
REFERENCE Δp .58

SCHEMATIC OF TRAVERSE POINT LAYOUT

READ AND RECORD ALL DATA EVERY 8 MINUTES

TRAVERSE POINT NUMBER	SAMPLING TIME, min	CLOCK TIME (24 hr CLOCK)	GAS METER READING (V_m), ft^3	VELOCITY HEAD (Δp_s), in. H_2O	ORIFICE PRESSURE DIFFERENTIAL (ΔH), in. H_2O DESIRED	ORIFICE PRESSURE DIFFERENTIAL (ΔH), in. H_2O ACTUAL	STACK TEMPERATURE (T_s), °F	DRY GAS METER TEMPERATURE INLET ($T_{m\,in}$), °F	DRY GAS METER TEMPERATURE OUTLET ($T_{m\,out}$), °F	PUMP VACUUM, in. Hg	SAMPLE BOX TEMPERATURE, °F	IMPINGER TEMPERATURE, °F
	2:23	00	236.237									
X 1	2:31	08	241.7	.50	1.6	1.6	208	70	70	8	250	40
2	2:39	16	247.8	.49	1.6	1.6	208	85	71	8	250	45
3	2:47	24	253.1	.47	1.5	1.5	205	94	74	8	250	48
4	2:55	32	258.6	.51	1.6	1.6	209	100	78	9	250	50
5	3:03	40	264.7	.52	1.65	1.65	208	104	81	9	250	52
6	3:11	48	271.330	.50	1.6	1.6	208	106	85	9	250	60
	3:20											
Y 1	3:28	56	275.9	.33	1.1		208	95	87	5	250	50
2	3:36	64	280.5	.33	1.1		207	105	88	5	250	55
3	3:44	72	285.6	.36	1.2		208	108	90	8	250	57
4	3:52	80	291.6	.48	1.5		208	108	90	8	250	60
5	4:00	88	297.6	.62	2.0		210	112	92	10	250	60
6	4:08	96	304.428	.71	2.25		209	115	94	12	250	
				$\overline{\Delta p}$ = .693								
		96	68.191	.49	1.50		207	91.75				

COMMENTS: leak check before test <0 cc/min @ 10 in Hg

EPA-D-0-225

6.09

FIELD DATA

PLANT ASARCO
DATE 7/19/78
SAMPLING LOCATION MATTE TAPPING
SAMPLE TYPE ARSENIC
RUN NUMBER AA-MT-1
OPERATOR JONGLEUX / ~~ROSARIO~~ RODNEY
AMBIENT TEMPERATURE 71
BAROMETRIC PRESSURE ~~30.77~~ 30.11
STATIC PRESSURE, (P_s) ~~30.77~~
FILTER NUMBER (s) 505

PROBE LENGTH AND TYPE 3' S.S.
NOZZLE I.D. .248
ASSUMED MOISTURE, %
SAMPLE BOX NUMBER
METER BOX NUMBER 2343
METER $\Delta H_@$ 1.82
C FACTOR 1.0
PROBE HEATER SETTING
HEATER BOX SETTING
REFERENCE Δp 56

SCHEMATIC OF TRAVERSE POINT LAYOUT

READ AND RECORD ALL DATA EVERY _____ MINUTES

	TRAVERSE POINT NUMBER	SAMPLING TIME, min	CLOCK TIME (24 hr CLOCK)	GAS METER READING (V_m), ft³	VELOCITY HEAD (Δp_s), in. H_2O	ORIFICE PRESSURE DIFFERENTIAL (ΔH), in. H_2O DESIRED	ACTUAL	STACK TEMPERATURE (T_s), °F		DRY GAS METER TEMPERATURE INLET ($T_{m\,in}$), °F	OUTLET ($T_{m\,out}$), °F	PUMP VACUUM, in. Hg	SAMPLE BOX TEMPERATURE, °F	IMPINGER TEMPERATURE, °F
		05	~~752~~	903.845										
A	1	11	8.03	913.769	1.1	~~3.7~~	3.7	91	117	72/83	70/72	14	250	50
	2	21	810→3.21	924.654	1.1	3.7	3.7	134	170	90 105	75 80	17	250	60
START	3	Start	119	~~934.100~~	~~1.1~~	3.7	3.7	112	129	70	68	20	250	60
	3	31	129	934.100	1.1	3.7	3.7	112	126	70	68	20	250	60
STOP	4	34	132	937.100	1.1	3.7	3.7	123	173	84	80	25	250	50
Start	4		140		1.0	3.9	3.9	145	145	86	86	25	250	50
Stop		148	~~(43.45)~~	945.135	1.1	3.9	3.9	145	145	86	84	25	250	50
Start	1		159		1.1	3.7	3.7	165	160	82	76	25	250	60
Stop	1	50	207	952.728	1.1	3.7	3.7	144	160	82	76	25	250	60
Start	2		212											
Stop	2	59	221	962.742	1.0	3.7	3.7	144	150	84	78	25	250	60
Start	3		228											
Stop	3	68	237	972.478	1.0	3.7	3.5	153	150	85	82	25	250	60
Start	4		243											
Stop	4	78	253	982.363	1.0	3.7	3.5	145	160	88	80	25	250	60
			78											
				78.520	1.06	3.53		121		84	79.44			
						3				81.19				

COMMENTS: Post-leak check 2.015 CFM $\sqrt{\Delta p}$ = 1.02

E... ...ont 235

79

FIELD DATA

(61)

PLANT ASARCO
DATE 9/20/78
SAMPLING LOCATION MATTE TAPPING
SAMPLE TYPE ARSENIC
RUN NUMBER AA-MT-2
OPERATOR JONGLEWE / PAGAN
AMBIENT TEMPERATURE 69
BAROMETRIC PRESSURE 30.08
STATIC PRESSURE, (P_s) 1.8
FILTER NUMBER (s) 509

PROBE LENGTH AND TYPE 3' SS.
NOZZLE I.D. .248
ASSUMED MOISTURE, % .
SAMPLE BOX NUMBER
METER BOX NUMBER 2343
METER $\Delta H_@$ 1.82
C FACTOR 1.0
PROBE HEATER SETTING ~~75~~
HEATER BOX SETTING 250
REFERENCE Δp .56

SCHEMATIC OF TRAVERSE POINT LAYOUT

READ AND RECORD ALL DATA EVERY _____ MINUTES

TRAVERSE POINT NUMBER	SAMPLING TIME, min	CLOCK TIME (24 hr CLOCK)	GAS METER READING (V_m), ft³	VELOCITY HEAD (Δp_s), in. H_2O	ORIFICE PRESSURE DIFFERENTIAL (ΔH), in. H_2O DESIRED	ORIFICE PRESSURE DIFFERENTIAL (ΔH), in. H_2O ACTUAL	STACK TEMPERATURE (T_s), °F	DRY GAS METER TEMPERATURE INLET ($T_{m\,in}$), °F	DRY GAS METER TEMPERATURE OUTLET ($T_{m\,out}$), °F	PUMP VACUUM, in. Hg	SAMPLE BOX TEMPERATURE, °F	IMPINGER TEMPERATURE, °F
	00	6:14	986.838									
A 1 STOP	09	6:23	995.854	.93	3.5	3.5	117 / 147	95 / 100	82 / 84	11	250	50
2		6:33	1003.973	.90	3.4	3.4	146 / 186	99 / 101	84 / 86	15	250	50
STOP	17	6:41										
3	26	6:46-:55 - 7:24	1011.502	1.1	3.7	3.7	186 / 179	100 / 106	84 / 87	15	250	50
4 STOP	36	7:34 7:44	1021.831	1.2	3.9	3.9	128 / 184	80 / 100	81 / 83	20	250	50
B 1 STOP	42	7:50 8:01	1028.736	1.0	3.5	3.5	182 / 181	84 / 100	81 / 81	20	250	50.
2 STOP	52	8:11 8:44	1038.252	1.0	3.5	3.5	180 / 179	92 / 100	80 / 82	20	250	50
3	63	8:58 9:00	1049.809	1.0 ~~.96~~	3.5	3.5	145 / 165	83 / 100	80 / 83	21	250	50
4	75	9:12	1060.494	.96	3.3	3.3	145 / 158	86 / 107	80 / 84	20	250	50
	75		73.656	1.01	3.54		163		80.19			

COMMENTS: LEAK TEST @ 20" Hg = .018 CFM RG

$\sqrt{\Delta p}$ = .980

EPA (Dec) 235

92.66%

615

FIELD DATA

PLANT ASARCO - TACOMA
DATE 9/21/78
SAMPLING LOCATION MAIN STACK
SAMPLE TYPE ARSENIC
RUN NUMBER AA-MT-3
OPERATOR JONGEUX / FAGAN
AMBIENT TEMPERATURE 71
BAROMETRIC PRESSURE 30.01
STATIC PRESSURE, (P_s) 1.8 in. H_2O
FILTER NUMBER (s) 557

PROBE LENGTH AND TYPE 3' S.S.
NOZZLE I.D. .248
ASSUMED MOISTURE, %
SAMPLE BOX NUMBER 8E
METER BOX NUMBER 2343
METER ΔH@ 1.82
C FACTOR 1.0
PROBE HEATER SETTING —
HEATER BOX SETTING 250
REFERENCE Δp .56

SCHEMATIC OF TRAVERSE POINT LAYOUT

READ AND RECORD ALL DATA EVERY TAPE ~10 MINUTES ~~MINUTES~~

TRAVERSE POINT NUMBER	SAMPLING TIME, min	CLOCK TIME (24 hr CLOCK)	GAS METER READING (V_m), ft^3	VELOCITY HEAD (Δp_s), in. H_2O	ORIFICE PRESSURE DIFFERENTIAL (ΔH), in. H_2O DESIRED	ACTUAL	STACK TEMPERATURE (T_s), °F	DRY GAS METER TEMPERATURE INLET ($T_{m\,in}$), °F	OUTLET ($T_{m\,out}$), °F	PUMP VACUUM, in. Hg	SAMPLE BOX TEMPERATURE, °F	IMPINGER TEMPERATURE, °F
	00	1136	1062.814									
A 1	10	1146	1071.923	.90	3.0	3.0	160	94	78	10	250	55
	—		—	—	—	—	177	101	82	—	—	—
2		1149	1071.923	.90	3.0	3.0	159	100	82	10	250	55
	18	11:57	1079.422	—	—	—	188	104	84	—	—	—
3	28	12:03	1079.422	1.2	4.0	4.0	182	84	82	15	250	55
		12:13	1089.647	—	—	—	188	110	86	20	—	—
4	39	5:34	1089.647	1.2	4.0	4.0	130	75	72	18	250	44
		545	1105.524	—	4.0	—	156	97	76	—	—	—
1	47	556	1105.524	1.0	3.5	3.5	168	83	75	16	250	44
		6:04	1109.172	—	—	—	—	100	80	—	—	—
2	59	7:08	1109.172	.97	3.2	3.2	140	78	74	15	250	40
		7:20	1120.4 —	—	—	—	174	100	80	—	—	
3	67	7:27	1120.4	1.1	3.6	3.6	151	90	80	16	250	50
		7:35	1127.578	—	—	—	169	99	81	—	—	—
4	74	7:44	1127.578	.98	3.3	3.3	139	85	80	16	250	46
		7:54	1134.928	—	—	—	179	100	82	—	—	
				(ΔP = 1.01)								

164°F

84.10°F

COMMENTS: LEAK RATE PRIOR TO TEST @ 15" Hg - .015 CFM.

EPA-Dwt 235

81

15115F1 2

FIELD DATA

6/2

PLANT ASARCO
DATE 9/20/90
SAMPLING LOCATION CALCINE DUCT
SAMPLE TYPE As.
RUN NUMBER AA-CD-1
OPERATOR ROONEY
AMBIENT TEMPERATURE 55°
BAROMETRIC PRESSURE 30.01
STATIC PRESSURE, (P_s)
FILTER NUMBER (s) 558

PROBE LENGTH AND TYPE 5'SS
NOZZLE I.D. .250
ASSUMED MOISTURE, % 2%
SAMPLE BOX NUMBER
METER BOX NUMBER
METER $\Delta H_@$
C FACTOR
PROBE HEATER SETTING 300
HEATER BOX SETTING 250
REFERENCE Δp .4

SHIELD 10"

SCHEMATIC OF TRAVERSE POINT LAYOUT

READ AND RECORD ALL DATA EVERY _____ MINUTES

TRAVERSE POINT NUMBER	SAMPLING TIME, min	CLOCK TIME (24 hr CLOCK)	GAS METER READING (V_m), ft^3	VELOCITY HEAD (Δp_s), in. H_2O	ORIFICE PRESSURE DIFFERENTIAL (ΔH), in. H_2O DESIRED	ORIFICE PRESSURE DIFFERENTIAL (ΔH), in. H_2O ACTUAL	STACK TEMPERATURE (T_s), °F	DRY GAS METER TEMPERATURE INLET ($T_{m\,in}$), °F	DRY GAS METER TEMPERATURE OUTLET ($T_{m\,out}$), °F	PUMP VACUUM, in. Hg	SAMPLE BOX TEMPERATURE, °F	IMPINGER TEMPERATURE, °F
START	0	1021	711.765									
	2	1027	713.128	.48	1.86	1.86	78	78	78	3	250	60
		1040										
	4	1042	715.123	.50	2.4	2.4	78	78	78	4	250	60
		1110										
	7	1113	718.080	.50	2.4	2.4	78	80	78	5	250	60
		1124										
	9	1126	719.34	.50	2.4	2.4	78	82	80	5	250	60
		1142										
	10	1143	720.405	.50	2.4	2.4	78	82	80	5	250	60
		1151										
	13	1154	722.000	.50	2.4	2.4	78	82	80	5	250	60
		1211										
	15	1213	723.100	.50	2.4	2.4	78	82	80	5	250	60
	15		11.335	.48	2.4		78	80				

COMMENTS: Pre leak .01 cfm $\sqrt{\Delta P}$ = .693
Post leak .01 cfm

EPA-Dwt 235

(17)

FIELD DATA

94.78 %

PLANT ASARCO
DATE 4/20/93
SAMPLING LOCATION CALCINING DUST
SAMPLE TYPE ARSENIC
RUN NUMBER 7A-CD-L
OPERATOR LEONCY/CUFINO
AMBIENT TEMPERATURE
BAROMETRIC PRESSURE 30.01
STATIC PRESSURE, (P_s) [illegible] in. H_2O
FILTER NUMBER (s) 553

PROBE LENGTH AND TYPE 5' S
NOZZLE I.D. .250
ASSUMED MOISTURE, %
SAMPLE BOX NUMBER
METER BOX NUMBER 2010
METER $\Delta H_@$
C FACTOR
PROBE HEATER SETTING
HEATER BOX SETTING
REFERENCE Δp .4

SCHEMATIC OF TRAVERSE POINT LAYOUT

READ AND RECORD ALL DATA EVERY _____ MINUTES

	TRAVERSE POINT NUMBER	SAMPLING TIME, min	CLOCK TIME (24 hr CLOCK)	GAS METER READING (V_m), ft^3	VELOCITY HEAD (Δp_s), in. H_2O	ORIFICE PRESSURE DIFFERENTIAL (ΔH), in. H_2O DESIRED	ORIFICE PRESSURE DIFFERENTIAL (ΔH), in. H_2O ACTUAL	STACK TEMPERATURE (T_s), °F	DRY GAS METER TEMPERATURE INLET ($T_{m\,in}$), °F	DRY GAS METER TEMPERATURE OUTLET ($T_{m\,out}$), °F	PUMP VACUUM, in. Hg	SAMPLE BOX TEMPERATURE, °F	IMPINGER TEMPERATURE, °F
start		452	0	723.455									
stop		454	2	725.236	.5	2.3	2.3	78	78	72	3	250	60
start		508											
stop		509	3	726.171	.5	2.3	2.3	78	78	72	3	250	60
start		522											
stop		523.5	4.5	727.313	.5	2.3	2.3	78	78	72	3	250	60
start		539											
stop		540	7.5	728.553	.5	2.3	2.3	78	78	72	3	250	60
start		553											
stop		555.5	10	730.236	.5	2.3	2.3	78	78	72	3	250	60
start		608											
stop		609 30	11 30	731.400	.5	2.3	2.3	78	78	72	3	250	60
start		623											
stop		624 30	13	733.250	.55	2.3	2.3	78	78	72	3	250	60
				9.8 cf	.51	2.3	2.3	78°F	75°F				

COMMENTS:

$\overline{\sqrt{\Delta p}} = .714$

EPA (Out 233) [illegible]

83

106.37

6/8

FIELD DATA

PLANT ASARCO
DATE 9/22
SAMPLING LOCATION CALCINE DUCT
SAMPLE TYPE ARSENIC
RUN NUMBER AA-CD-3
OPERATOR Conner
AMBIENT TEMPERATURE 75
BAROMETRIC PRESSURE 30.05
STATIC PRESSURE, (P_s)
FILTER NUMBER (s)

PROBE LENGTH AND TYPE 33
NOZZLE I.D. 0.245
ASSUMED MOISTURE, % 29
SAMPLE BOX NUMBER
METER BOX NUMBER
METER $\Delta H_@$ 1.85
C FACTOR 1.0
PROBE HEATER SETTING
HEATER BOX SETTING
REFERENCE Δp 0.40

SCHEMATIC OF TRAVERSE POINT LAYOUT

READ AND RECORD ALL DATA EVERY _____ MINUTES

	TRAVERSE POINT NUMBER	SAMPLING TIME, min / CLOCK TIME (24 hr CLOCK)	GAS METER READING (V_m), ft^3	VELOCITY HEAD (Δp_s), in. H_2O	ORIFICE PRESSURE DIFFERENTIAL (ΔH), in. H_2O DESIRED	ACTUAL	STACK TEMPERATURE (T_s), °F	DRY GAS METER TEMPERATURE INLET ($T_{m\,in}$), °F	OUTLET ($T_{m\,out}$), °F	PUMP VACUUM, in. Hg	SAMPLE BOX TEMPERATURE, °F	IMPINGER TEMPERATURE, °F
		4:13	734.053									
1.0	1 min	4:14	734.782	.8	3.7		80	75	75	8.0	250	55
1.0	1 min	4:33-4:35	736.783	.8	3.7		80	76	78	8.0	250	55
3.0	30 sec	34 sec	737.087	.8	3.7		80	76	80	8.0	250	55
5.2	52 sec	5:58	738.038	.6	2.8		81	76	76	6.0	250	55
8.5	1 min 25 sec	6:08	739.227	.6	2.8		80	76	76	6.0	250	55
12.0	2 min.	6:17	741.022	0.6	2.8		80	76	76	7.0	250	55
	6.78		6.969	.7	3.25		80	76.33				

COMMENTS: .6 - 2.8

$\sqrt{\Delta p} = .837$

EPA-Dwl 235

84

3. ANALYTICAL DATA SHEETS

TRW

602

ANALYTICAL DATA

PLANT ASARCO - (Tacoma)

DATE 9/15/78

SAMPLING LOCATION Roaster Baghse Fn

SAMPLE TYPE Arsenic

RUN NUMBER AA-RI-1

SAMPLE BOX NUMBER

CLEAN-UP MAN Sharon DePilo

COMMENTS:

FRONT HALF

LABORATORY RESULTS

ACETONE WASH OF NOZZLE, PROBE, CYCLONE (BYPASS), FLASK, FRONT HALF OF FILTER HOLDER — CONTAINER 383.00 mg

FILTER NUMBER 520, 406 — CONTAINER 4.30 mg

FRONT HALF SUBTOTAL 387.30 mg

BACK HALF

IMPINGER CONTENTS AND WATER WASH OF IMPINGERS, CONNECTORS, AND BACK HALF OF FILTER HOLDER — CONTAINER .60 mg

ETHER-CHLOROFORM EXTRACTION — mg

ACETONE WASH OF IMPINGERS, CONNECTORS, AND BACK HALF OF FILTER HOLDER — CONTAINER — mg

BACK HALF SUBTOTAL .60 mg

TOTAL WEIGHT [illegible] mg

MOISTURE

	1+2	3,4,+5	Total
IMPINGERS			
FINAL VOLUME	322 ml	461 ml	783 ml
INITIAL VOLUME	300 ml	450 ml	750 ml
NET VOLUME	22 ml	11 ml	33 ml

SILICA GEL			
FINAL WEIGHT	259.0 g	g	g
INITIAL WEIGHT	250 g	g	g
NET WEIGHT	9.0 g	g	g

TOTAL MOISTURE 42.0 g

TRW

603

ANALYTICAL DATA

PLANT ASARCO-Tacoma

DATE 9/15/78

SAMPLING LOCATION Reactor Baghouse Inlet

SAMPLE TYPE Axonic

RUN NUMBER ~~AA~~ RI-2

SAMPLE BOX NUMBER

CLEAN-UP MAN DeFillo/Sanfaux

COMMENTS:

FRONT HALF

		LABORATORY RESULTS
ACETONE WASH OF NOZZLE, PROBE, CYCLONE (BYPASS), FLASK, FRONT HALF OF FILTER HOLDER	CONTAINER	404.60 mg
FILTER NUMBER 521	CONTAINER	36.00 mg
~~550~~		
FRONT HALF SUBTOTAL		440.60 mg

BACK HALF

IMPINGER CONTENTS AND WATER WASH OF IMPINGERS, CONNECTORS, AND BACK HALF OF FILTER HOLDER	CONTAINER	4.20 mg
	ETHER-CHLOROFORM EXTRACTION	mg
ACETONE WASH OF IMPINGERS, CONNECTORS, AND BACK HALF OF FILTER HOLDER	CONTAINER	mg
	BACK HALF SUBTOTAL	4.20 mg
	TOTAL WEIGHT	444.80 mg

MOISTURE

	1,2	3,4+5	Total
IMPINGERS			
FINAL VOLUME	328 ml	460 ml	788 ml
INITIAL VOLUME	300 ml	450 ml	750 ml
NET VOLUME	328 ml	10 ml	38 ml

SILICA GEL			
FINAL WEIGHT	251.3 g	g	g
INITIAL WEIGHT	250 g	g	g
NET WEIGHT	1.3 g	g	g

TOTAL MOISTURE 39.3 g

TRW

686

ANALYTICAL DATA

PLANT ASARCO - TACOMA

DATE 9/1/78

SAMPLING LOCATION ~~Ro~~ ROASTER BAGHOUSE INLET

SAMPLE TYPE ARSENIC

RUN NUMBER AA-RI-3

SAMPLE BOX NUMBER

CLEAN-UP MAN [illegible]

COMMENTS:

FRONT HALF

		LABORATORY RESULTS
ACETONE WASH OF NOZZLE, PROBE, CYCLONE (BYPASS), FLASK, FRONT HALF OF FILTER HOLDER	CONTAINER	304.20 mg
FILTER NUMBER 521	CONTAINER	28.50 mg
FRONT HALF SUBTOTAL		332.70 mg

BACK HALF

IMPINGER CONTENTS AND WATER WASH OF IMPINGERS, CONNECTORS, AND BACK HALF OF FILTER HOLDER	CONTAINER	3.113 mg
	ETHER-CHLOROFORM EXTRACTION	mg
ACETONE WASH OF IMPINGERS, CONNECTORS, AND BACK HALF OF FILTER HOLDER	CONTAINER	mg
	BACK HALF SUBTOTAL	3.113 mg
	TOTAL WEIGHT	335.813 mg

MOISTURE

	1, 2	3, 4, 5	Total
IMPINGERS FINAL VOLUME	350 ml	436 mls	786 ml
INITIAL VOLUME	300 ml	450 mls	750 ml
NET VOLUME	50 ml	-14 mls	36 ml

SILICA GEL			
FINAL WEIGHT	260.3 g	g	g
INITIAL WEIGHT	250 g	g	g
NET WEIGHT	10.3 g	g	g

TOTAL MOISTURE 46.3 g

TRW

621

ANALYTICAL DATA

PLANT ASARCO

DATE SEPT. 24, 1978.

SAMPLING LOCATION ARSENIC BAGHOUSE OUTLET

SAMPLE TYPE ARSENIC

RUN NUMBER AA-ABO-1

SAMPLE BOX NUMBER

CLEAN-UP MAN JUNGLEUX

COMMENTS:

FRONT HALF

		LABORATORY RESULTS
ACETONE WASH OF NOZZLE, PROBE, CYCLONE (BYPASS), FLASK, FRONT HALF OF FILTER HOLDER	CONTAINER	134.00 mg
FILTER NUMBER 554	CONTAINER	.70 mg
	FRONT HALF SUBTOTAL	134.70 mg

BACK HALF

IMPINGER CONTENTS AND WATER WASH OF IMPINGERS, CONNECTORS, AND BACK HALF OF FILTER HOLDER	CONTAINER	.424 mg
	ETHER-CHLOROFORM EXTRACTION	mg
ACETONE WASH OF IMPINGERS, CONNECTORS, AND BACK HALF OF FILTER HOLDER	CONTAINER	mg
	BACK HALF SUBTOTAL	.424 mg
	TOTAL WEIGHT	135.124 mg

MOISTURE

	1,2	3,4,5
IMPINGERS		
FINAL VOLUME	308 ml	442
INITIAL VOLUME	300 ml	~~350~~
NET VOLUME	+ 8 ml	-8 = 0

SILICA GEL			
FINAL WEIGHT	265 g	g	g
INITIAL WEIGHT	250 g	g	g
NET WEIGHT	15 g	g	g

TOTAL MOISTURE 15 g

TRW

623

ANALYTICAL DATA

PLANT ASARCO

DATE SEPT. 24-25 1978

SAMPLING LOCATION BAGHOUSE OUTLET

SAMPLE TYPE ARSENIC

RUN NUMBER AA - ABO - 2

SAMPLE BOX NUMBER

CLEAN-UP MAN JONGLEUX / ROONEY

COMMENTS:

FRONT HALF

		LABORATORY RESULTS
ACETONE WASH OF NOZZLE, PROBE, CYCLONE (BYPASS), FLASK, FRONT HALF OF FILTER HOLDER	CONTAINER	38.24 mg
FILTER NUMBER 547	CONTAINER	.6625 mg
FRONT HALF SUBTOTAL		38.965 mg

BACK HALF

IMPINGER CONTENTS AND WATER WASH OF IMPINGERS, CONNECTORS, AND BACK HALF OF FILTER HOLDER	CONTAINER	.415 mg
	ETHER-CHLOROFORM EXTRACTION	mg
ACETONE WASH OF IMPINGERS, CONNECTORS, AND BACK HALF OF FILTER HOLDER	CONTAINER	mg
	BACK HALF SUBTOTAL	.415 mg
	TOTAL WEIGHT	39.280 mg

MOISTURE

	1, 2	3, 4, 5	
IMPINGERS			
FINAL VOLUME	ml		769
INITIAL VOLUME	300 ml	500	750
NET VOLUME	ml		19
SILICA GEL			
FINAL WEIGHT	271 g	g	g
INITIAL WEIGHT	250 g	g	g
NET WEIGHT	21 g	g	g

TOTAL MOISTURE 40 g

TRW

627

ANALYTICAL DATA

PLANT ASARCO

DATE SEPT. 25 1978

SAMPLING LOCATION ARSENIC BAGHOUSE EXITET

SAMPLE TYPE ARSENIC

RUN NUMBER AA - ABO - 3

SAMPLE BOX NUMBER

CLEAN-UP MAN JONGLEN ROONEY

COMMENTS:

FRONT HALF

LABORATORY RESULTS

ACETONE WASH OF NOZZLE, PROBE, CYCLONE (BYPASS), FLASK, FRONT HALF OF FILTER HOLDER

CONTAINER _____ 212.00 mg

FILTER NUMBER 543

CONTAINER _____ 300 mg

FRONT HALF SUBTOTAL 215.00 mg

BACK HALF

IMPINGER CONTENTS AND WATER WASH OF IMPINGERS, CONNECTORS, AND BACK HALF OF FILTER HOLDER

CONTAINER _____ 1.30 mg

ETHER-CHLOROFORM EXTRACTION _____ mg

ACETONE WASH OF IMPINGERS, CONNECTORS, AND BACK HALF OF FILTER HOLDER

CONTAINER _____ mg

BACK HALF SUBTOTAL 1.30 mg

TOTAL WEIGHT 216.30 mg

MOISTURE

IMPINGERS	1, 2	3, 4, 5
FINAL VOLUME	527 ml	455
INITIAL VOLUME	300 ml	450
NET VOLUME	+227 ml	+5

SILICA GEL			
FINAL WEIGHT	268 g	g	g
INITIAL WEIGHT	250 g	g	g
NET WEIGHT	18 g	g	g

TOTAL MOISTURE 50 g

TRW

601

ANALYTICAL DATA

PLANT ASARCO - (Tacoma)

DATE 9/15/78

SAMPLING LOCATION Roaster Baghse Out.

SAMPLE TYPE Arsenic

RUN NUMBER AA-RO-1

SAMPLE BOX NUMBER

CLEAN-UP MAN Sharon DeFillo

COMMENTS:

FRONT HALF

LABORATORY RESULTS

ACETONE WASH OF NOZZLE, PROBE, CYCLONE (BYPASS), FLASK, FRONT HALF OF FILTER HOLDER — CONTAINER .9160 mg

FILTER NUMBER 509 — CONTAINER .575 mg

FRONT HALF SUBTOTAL 1.535 mg

BACK HALF

IMPINGER CONTENTS AND WATER WASH OF IMPINGERS, CONNECTORS, AND BACK HALF OF FILTER HOLDER — CONTAINER .080 mg

ETHER-CHLOROFORM EXTRACTION ____ mg

ACETONE WASH OF IMPINGERS, CONNECTORS, AND BACK HALF OF FILTER HOLDER — CONTAINER ____ mg

BACK HALF SUBTOTAL .080 mg

TOTAL WEIGHT 1.615 mg

MOISTURE

	1+2	3,4,+5	Total
IMPINGERS			
FINAL VOLUME	350 ml	544 ml	894 ml
INITIAL VOLUME	300 ml	500 ml	800 ml
NET VOLUME	50 ml	44 ml	94 ml
SILICA GEL			
FINAL WEIGHT	276.3 g	____ g	____ g
INITIAL WEIGHT	250 g	____ g	____ g
NET WEIGHT	26.3 g	____ g	____ g

120.3

TOTAL MOISTURE 120.3 g

... AND ENVIRONMENTAL OPERATIONS OF TRW INC.

TRW

604

ANALYTICAL DATA

PLANT ASARCO - Tacoma

DATE 9/16/78

SAMPLING LOCATION Roaster Baghouse Outlet

SAMPLE TYPE Arsenic

RUN NUMBER AA-RO-2

SAMPLE BOX NUMBER DeFillo/Sanglerx

CLEAN-UP MAN [illegible]

COMMENTS:

FRONT HALF

		LABORATORY RESULTS
ACETONE WASH OF NOZZLE, PROBE, CYCLONE (BYPASS), FLASK, FRONT HALF OF FILTER HOLDER	CONTAINER	.985 mg
FILTER NUMBER 501	CONTAINER	.625 mg
FRONT HALF SUBTOTAL		1.610 mg

BACK HALF

IMPINGER CONTENTS AND WATER WASH OF IMPINGERS, CONNECTORS, AND BACK HALF OF FILTER HOLDER	CONTAINER	.105 mg
	ETHER-CHLOROFORM EXTRACTION	mg
ACETONE WASH OF IMPINGERS, CONNECTORS, AND BACK HALF OF FILTER HOLDER	CONTAINER	mg
	BACK HALF SUBTOTAL	.105 mg
	TOTAL WEIGHT	1.715 mg

MOISTURE

	1+2	3,4+5	Total
IMPINGERS			
FINAL VOLUME	362 ml	474 ml	836 ml
INITIAL VOLUME	300 ml	450 ml	750 ml
NET VOLUME	62 ml	24 ml	86 ml
SILICA GEL			
FINAL WEIGHT	270.8 g	g	g
INITIAL WEIGHT	250 g	g	g
NET WEIGHT	20.8 g	g	g

TOTAL MOISTURE 106.8 g

TRW

605

ANALYTICAL DATA

PLANT ASARCO

DATE 9/10/78

SAMPLING LOCATION ROASTER BAGHOUSE OUTLET

SAMPLE TYPE ARSENIC

RUN NUMBER AA-RO-3

SAMPLE BOX NUMBER

CLEAN-UP MAN DePillo/Sanfeux

COMMENTS:

FRONT HALF

		LABORATORY RESULTS
ACETONE WASH OF NOZZLE, PROBE, CYCLONE (BYPASS), FLASK, FRONT HALF OF FILTER HOLDER	CONTAINER	1.475 mg
FILTER NUMBER 502	CONTAINER	.275 mg
FRONT HALF SUBTOTAL		1.750 mg

BACK HALF

IMPINGER CONTENTS AND WATER WASH OF IMPINGERS, CONNECTORS, AND BACK HALF OF FILTER HOLDER	CONTAINER	2.211 mg
	ETHER-CHLOROFORM EXTRACTION	mg
ACETONE WASH OF IMPINGERS, CONNECTORS, AND BACK HALF OF FILTER HOLDER	CONTAINER	mg
	BACK HALF SUBTOTAL	2.211 mg
	TOTAL WEIGHT	3.961 mg

MOISTURE

	1&2	3,4,5	Total
IMPINGERS			
FINAL VOLUME	368 ml	477ml	845
INITIAL VOLUME	300 ml	450 ml	750 ml
NET VOLUME	68 ml	27ml	95ml
SILICA GEL			
FINAL WEIGHT	278.2 g	g	g
INITIAL WEIGHT	251.0 g	g	g
NET WEIGHT	27.2 g	g	g

TOTAL MOISTURE 122.2 g

TRW

600

ANALYTICAL DATA

PLANT ASARCO - Tacoma

DATE ~~9/15/78~~

SAMPLING LOCATION ESP Outlet

SAMPLE TYPE Arsenic

RUN NUMBER AA-ESP-1

SAMPLE BOX NUMBER

CLEAN-UP MAN

COMMENTS:

FRONT HALF

		NITRIC ACID	LABORATORY RESULTS
ACETONE WASH OF NOZZLE, PROBE, CYCLONE (BYPASS), FLASK, FRONT HALF OF FILTER HOLDER	CONTAINER		1.920 52.200 mg
FILTER NUMBER ~~522~~ ~~407~~ 500	CONTAINER		14.500 mg
	FRONT HALF SUBTOTAL		67.620 mg

BACK HALF

IMPINGER CONTENTS AND WATER WASH OF IMPINGERS, CONNECTORS, AND BACK HALF OF FILTER HOLDER	CONTAINER	1.500 mg
	ETHER-CHLOROFORM EXTRACTION	mg
ACETONE WASH OF IMPINGERS, CONNECTORS, AND BACK HALF OF FILTER HOLDER	CONTAINER	mg
	BACK HALF SUBTOTAL	1.500 mg
	TOTAL WEIGHT	69.120 mg

MOISTURE

	142	3,4,5	Total
IMPINGERS			
FINAL VOLUME	347 ml	456 ml	803
INITIAL VOLUME	300 ml	450 ml	750 ml
NET VOLUME	47 ml	6 ml	53 ml
SILICA GEL			
FINAL WEIGHT	261.9 g	g	g
INITIAL WEIGHT	250 g	~~251.0~~ g	g
NET WEIGHT	11.9 g	g	g

TOTAL MOISTURE 64.9 g

TRW

607

ANALYTICAL DATA

PLANT ASARCO

DATE 9/16/78

SAMPLING LOCATION ESP OUTLET

SAMPLE TYPE

RUN NUMBER AA-ESP-2

SAMPLE BOX NUMBER

CLEAN-UP MAN DePillo/Dongleux

COMMENTS:

FRONT HALF

		LABORATORY RESULTS
ACETONE WASH OF NOZZLE, PROBE, CYCLONE (BYPASS), FLASK, FRONT HALF OF FILTER HOLDER	CONTAINER	22.916 mg
FILTER NUMBER 514	CONTAINER	14.00 mg
FRONT HALF SUBTOTAL		36.916 mg

BACK HALF

IMPINGER CONTENTS AND WATER WASH OF IMPINGERS, CONNECTORS, AND BACK HALF OF FILTER HOLDER	CONTAINER	.769 mg
	ETHER-CHLOROFORM EXTRACTION	mg
ACETONE WASH OF IMPINGERS, CONNECTORS, AND BACK HALF OF FILTER HOLDER	CONTAINER	mg
	BACK HALF SUBTOTAL	.769 mg
	TOTAL WEIGHT	37.729 mg

MOISTURE

	1, 2	3, 4, 5	Total
IMPINGERS			
FINAL VOLUME	354 ml	459 ml	813 ml
INITIAL VOLUME	300 ml	450 ml	750 ml
NET VOLUME	54 ml	9 ml	63 ml

SILICA GEL			
FINAL WEIGHT	263 g	g	g
INITIAL WEIGHT	250 g	g	g
NET WEIGHT	13 g	g	g

TOTAL MOISTURE 76.3 g

TRW

608

ANALYTICAL DATA

PLANT ASARCO

DATE 9/16/78

SAMPLING LOCATION ~~ESP~~ - ESP OUTLET

SAMPLE TYPE AA - ESP-3 (ARSENIC)

RUN NUMBER AA - ESP-3

SAMPLE BOX NUMBER

CLEAN-UP MAN

COMMENTS:

FRONT HALF

		LABORATORY RESULTS
ACETONE WASH OF NOZZLE, PROBE, CYCLONE (BYPASS), FLASK, FRONT HALF OF FILTER HOLDER	CONTAINER	6.00 mg
FILTER NUMBER 503	CONTAINER	8.00 mg
	FRONT HALF SUBTOTAL	14.00 mg

BACK HALF

IMPINGER CONTENTS AND WATER WASH OF IMPINGERS, CONNECTORS, AND BACK HALF OF FILTER HOLDER	CONTAINER	1.6 mg
	ETHER-CHLOROFORM EXTRACTION	mg
ACETONE WASH OF IMPINGERS, CONNECTORS, AND BACK HALF OF FILTER HOLDER	CONTAINER	mg
	BACK HALF SUBTOTAL	1.6 mg
	TOTAL WEIGHT	15.60 mg

MOISTURE

	1,2	3,4,5	Total
IMPINGERS			
FINAL VOLUME	326 ml	461 ml	787 ml
INITIAL VOLUME	300 ml	450 ml	750 ml
NET VOLUME	26 ml	11 ml	37 ml
SILICA GEL			
FINAL WEIGHT	264 g	g	g
INITIAL WEIGHT	250 g	g	g
NET WEIGHT	11.4 g	g	g

TOTAL MOISTURE 48.4 g

TRW

611

ANALYTICAL DATA

PLANT ASARCO

DATE 9/19/78

SAMPLING LOCATION CONVERTER SLAG RETURN

SAMPLE TYPE ARSENIC

RUN NUMBER AA - CSR - 1

SAMPLE BOX NUMBER

CLEAN-UP MAN

COMMENTS:

FRONT HALF

		LABORATORY RESULTS
ACETONE WASH OF NOZZLE, PROBE, CYCLONE (BYPASS), FLASK, FRONT HALF OF FILTER HOLDER	CONTAINER	.750 mg
FILTER NUMBER 306	CONTAINER	.430 mg
	FRONT HALF SUBTOTAL	1.180 mg

BACK HALF

IMPINGER CONTENTS AND WATER WASH OF IMPINGERS, CONNECTORS, AND BACK HALF OF FILTER HOLDER	CONTAINER	.085 mg
	ETHER-CHLOROFORM EXTRACTION	mg
ACETONE WASH OF IMPINGERS, CONNECTORS, AND BACK HALF OF FILTER HOLDER	CONTAINER	mg
	BACK HALF SUBTOTAL	.085 mg
	TOTAL WEIGHT	1.265 mg

MOISTURE

	1,2	3,4,+5	Total
IMPINGERS			
FINAL VOLUME	301 ml	449	750
INITIAL VOLUME	300 ml	450 ml	750 ml
NET VOLUME	1 ml	-1	0
SILICA GEL			
FINAL WEIGHT	252.1 g	g	g
INITIAL WEIGHT	250 g	g	g
NET WEIGHT	g	g	g

x 2.1

TOTAL MOISTURE 2.1 g

08

TRW

6/0

ANALYTICAL DATA

PLANT ASARCO

DATE 9/19/78

SAMPLING LOCATION SLAG TAPPING

SAMPLE TYPE ARSENIC

RUN NUMBER AA - ST-1

SAMPLE BOX NUMBER

CLEAN-UP MAN

COMMENTS:

FRONT HALF

ACETONE WASH OF NOZZLE, PROBE, CYCLONE (BYPASS), FLASK, FRONT HALF OF FILTER HOLDER

FILTER NUMBER ~~505~~ 504

LABORATORY RESULTS

CONTAINER 2.09 mg

CONTAINER 19.50 mg

FRONT HALF SUBTOTAL 21.59 mg

BACK HALF

IMPINGER CONTENTS AND WATER WASH OF IMPINGERS, CONNECTORS, AND BACK HALF OF FILTER HOLDER

ACETONE WASH OF IMPINGERS, CONNECTORS, AND BACK HALF OF FILTER HOLDER

CONTAINER .461 mg

ETHER-CHLOROFORM EXTRACTION mg

CONTAINER mg

BACK HALF SUBTOTAL .461 mg

TOTAL WEIGHT 22.051 mg

MOISTURE

	#2	3,4,5	Total
IMPINGERS			
FINAL VOLUME	307 ml	456 ml	763 ml
INITIAL VOLUME	300 ml	450 ml	750 ml
NET VOLUME	7 ml	6 ml	13 ml
SILICA GEL			
FINAL WEIGHT	269.6 g	g	g
INITIAL WEIGHT	250 g	g	g
NET WEIGHT	19.6 g	g	g

TOTAL MOISTURE 32.6 g

TRW

614

ANALYTICAL DATA

PLANT ASARCO- TACOMA

DATE 9/20/78

SAMPLING LOCATION SLAG TAPPING

SAMPLE TYPE ARSENIC

RUN NUMBER AA - ST - 2

SAMPLE BOX NUMBER

CLEAN-UP MAN

COMMENTS:

FRONT HALF

ACETONE WASH OF NOZZLE, PROBE, CYCLONE (BYPASS), FLASK, FRONT HALF OF FILTER HOLDER

FILTER NUMBER ~~[illegible]~~ 405

	LABORATORY RESULTS
CONTAINER	6.00 mg
CONTAINER	49.00 mg
FRONT HALF SUBTOTAL	55.00 mg

BACK HALF

IMPINGER CONTENTS AND WATER WASH OF IMPINGERS, CONNECTORS, AND BACK HALF OF FILTER HOLDER

ACETONE WASH OF IMPINGERS, CONNECTORS, AND BACK HALF OF FILTER HOLDER

CONTAINER	.115 mg
ETHER-CHLOROFORM EXTRACTION	mg
CONTAINER	mg
BACK HALF SUBTOTAL	.115 mg
TOTAL WEIGHT	55.115 mg

MOISTURE

	1+2	3,4+5	Total
IMPINGERS			
FINAL VOLUME	327 ml	446 ml	773 ml
INITIAL VOLUME	300 ml	450 ml	750 ml
NET VOLUME	27 ml	-4 ml	23 ml
SILICA GEL			
FINAL WEIGHT	269.0 g	g	g
INITIAL WEIGHT	252.0 g	g	g
NET WEIGHT	17.0 g	g	g

TOTAL MOISTURE 42.0 g

TRW

6/6

ANALYTICAL DATA

PLANT ASARCO

DATE 9/20/78

SAMPLING LOCATION SLAG TAPPING

SAMPLE TYPE ARSENIC

RUN NUMBER AA-ST-3

SAMPLE BOX NUMBER

CLEAN-UP MAN JONGLEUX

COMMENTS:

FRONT HALF

LABORATORY RESULTS

ACETONE WASH OF NOZZLE, PROBE, CYCLONE (BYPASS), FLASK, FRONT HALF OF FILTER HOLDER

FILTER NUMBER 556

CONTAINER .85 mg

CONTAINER 22.50 mg

FRONT HALF SUBTOTAL 23.35 mg

BACK HALF

IMPINGER CONTENTS AND WATER WASH OF IMPINGERS, CONNECTORS, AND BACK HALF OF FILTER HOLDER

CONTAINER .090 mg

ETHER-CHLOROFORM EXTRACTION mg

ACETONE WASH OF IMPINGERS, CONNECTORS, AND BACK HALF OF FILTER HOLDER

CONTAINER mg

BACK HALF SUBTOTAL .090 mg

TOTAL WEIGHT 23.440 mg

MOISTURE

	1,2	3,4,5
IMPINGERS		
FINAL VOLUME	300 ml	442
INITIAL VOLUME	300 ml	450 mg
NET VOLUME	0 ml	-8

SILICA GEL			
FINAL WEIGHT	260.6 g	g	g
INITIAL WEIGHT	252 g	g	g
NET WEIGHT	10.6 g	g	g

TOTAL MOISTURE [illegible] %

TRW

6 L O

ANALYTICAL DATA

PLANT ASARCO

DATE SEPT. 24, 1978

SAMPLING LOCATION ARSENIC BAGHOUSE INLET (ARSENIC KITCHEN)

SAMPLE TYPE AA - AK - 1 (ARSENIC)

RUN NUMBER AA - AK - 1

SAMPLE BOX NUMBER

CLEAN-UP MAN JONGLEUX / ROLLEY

COMMENTS:

FRONT HALF

		LABORATORY RESULTS
ACETONE WASH OF NOZZLE, PROBE, CYCLONE (BYPASS), FLASK, FRONT HALF OF FILTER HOLDER	CONTAINER	2800.00 mg
FILTER NUMBER 552	CONTAINER	540.00 mg
	FRONT HALF SUBTOTAL	3340.00 mg

BACK HALF

IMPINGER CONTENTS AND WATER WASH OF IMPINGERS, CONNECTORS, AND BACK HALF OF FILTER HOLDER	CONTAINER	.80 mg
	ETHER-CHLOROFORM EXTRACTION	mg
ACETONE WASH OF IMPINGERS, CONNECTORS, AND BACK HALF OF FILTER HOLDER	CONTAINER	mg
	BACK HALF SUBTOTAL	.80 mg
	TOTAL WEIGHT	3340.80 mg

MOISTURE

	1, 2	3, 4, 5
IMPINGERS		
FINAL VOLUME	346 ml	444
INITIAL VOLUME	300 ml	450
NET VOLUME	46 ml	-6

+40

SILICA GEL			
FINAL WEIGHT	264 g	g	g
INITIAL WEIGHT	250 g	g	g
NET WEIGHT	14 g	g	g

TOTAL MOISTURE 54 g

TRW

622

ANALYTICAL DATA

PLANT ASARCO

DATE SEPT. 24 -25 , 1975

SAMPLING LOCATION ARSENIC B HOUSE INLET ARSENIC KITCHEN

SAMPLE TYPE ARSENIC

RUN NUMBER AA - AK - 2

SAMPLE BOX NUMBER

CLEAN-UP MAN JONGLEUX / ROONEY

COMMENTS:

FRONT HALF

LABORATORY RESULTS

ACETONE WASH OF NOZZLE, PROBE, CYCLONE (BYPASS), FLASK, FRONT HALF OF FILTER HOLDER — CONTAINER _____ 2396.20 mg

FILTER NUMBER 549 — CONTAINER _____ 840.00 mg

FRONT HALF SUBTOTAL 3236.20 mg

BACK HALF

IMPINGER CONTENTS AND WATER WASH OF IMPINGERS, CONNECTORS, AND BACK HALF OF FILTER HOLDER — CONTAINER _____ .150 mg

ETHER-CHLOROFORM EXTRACTION _____ mg

ACETONE WASH OF IMPINGERS, CONNECTORS, AND BACK HALF OF FILTER HOLDER — CONTAINER _____ _____ mg

BACK HALF SUBTOTAL .150 mg

TOTAL WEIGHT 3236.35 mg

MOISTURE

1 2 3 4 5

IMPINGERS

FINAL VOLUME	_____ ml			800
INITIAL VOLUME	300 ml	450		750
NET VOLUME	_____ ml			50

SILICA GEL

FINAL WEIGHT	266 g	_____ g	_____ g	
INITIAL WEIGHT	252 g	_____ g	_____ g	
NET WEIGHT	14 g	_____ g	_____ g	

TOTAL MOISTURE 66 g

TRW

626

ANALYTICAL DATA

PLANT ASARCO

DATE SEPT. 25 1978

SAMPLING LOCATION ARSENIC KITCHEN B BAGHOUSE INLET

SAMPLE TYPE ARSENIC

RUN NUMBER AA-AK-3

SAMPLE BOX NUMBER

CLEAN-UP MAN INGLEUT / COONSEY

COMMENTS:

FRONT HALF

		LABORATORY RESULTS
ACETONE WASH OF NOZZLE, PROBE, CYCLONE (BYPASS), FLASK, FRONT HALF OF FILTER HOLDER	CONTAINER	3030.00 mg
FILTER NUMBER 544	CONTAINER	370.00 mg
FRONT HALF SUBTOTAL		3400.00 mg

BACK HALF

IMPINGER CONTENTS AND WATER WASH OF IMPINGERS, CONNECTORS, AND BACK HALF OF FILTER HOLDER	CONTAINER	.96 mg
	ETHER-CHLOROFORM EXTRACTION	mg
ACETONE WASH OF IMPINGERS, CONNECTORS, AND BACK HALF OF FILTER HOLDER	CONTAINER	mg
	BACK HALF SUBTOTAL	.96 mg
	TOTAL WEIGHT	3400.96 mg

MOISTURE

IMPINGERS	1.4	3.45	
FINAL VOLUME	354 ml	435	
INITIAL VOLUME	300 ml	420	
NET VOLUME	54 ml	-15	+39

SILICA GEL			
FINAL WEIGHT	261 g	g	g
INITIAL WEIGHT	200 g	g	g
NET WEIGHT	61 g	g	g

TOTAL MOISTURE 50 g

TRW

617

ANALYTICAL DATA

PLANT ASARCO

DATE SEPT. 24 1978

SAMPLING LOCATION ARSENIC BAGHOUSE INLET METALLIC ARSENIC

SAMPLE TYPE ARSENIC

RUN NUMBER AA - MA - 1

SAMPLE BOX NUMBER

CLEAN-UP MAN JONGLEUX

COMMENTS:

FRONT HALF

LABORATORY RESULTS

ACETONE WASH OF NOZZLE, PROBE, CYCLONE (BYPASS), FLASK, FRONT HALF OF FILTER HOLDER — CONTAINER 4,450.00 mg

FILTER NUMBER 553 — CONTAINER 173.00 mg

FRONT HALF SUBTOTAL 4623.00 mg

BACK HALF

IMPINGER CONTENTS AND WATER WASH OF IMPINGERS, CONNECTORS, AND BACK HALF OF FILTER HOLDER — CONTAINER .84 mg

ETHER-CHLOROFORM EXTRACTION — mg

ACETONE WASH OF IMPINGERS, CONNECTORS, AND BACK HALF OF FILTER HOLDER — CONTAINER — mg

BACK HALF SUBTOTAL .84 mg

TOTAL WEIGHT 4623.84 mg

MOISTURE

1,2 3,45

IMPINGERS

FINAL VOLUME	ml	443	
INITIAL VOLUME	300 ml	~~450~~	44
NET VOLUME	+21 ml	-7	

SILICA GEL

FINAL WEIGHT	272 g	g	g
INITIAL WEIGHT	250 g	g	g
NET WEIGHT	22 g	g	g

TOTAL MOISTURE +36 g

TRW

624

ANALYTICAL DATA

PLANT ASARCO

DATE SEPT. 24-25 1978

SAMPLING LOCATION ARSENIC BAGHOUSE INLET (METALLIC)

SAMPLE TYPE ARSENIC

RUN NUMBER AA-MA-2

SAMPLE BOX NUMBER

CLEAN-UP MAN JONGLEX / ROOLEY

COMMENTS:

FRONT HALF

		LABORATORY RESULTS
ACETONE WASH OF NOZZLE, PROBE, CYCLONE (BYPASS), FLASK, FRONT HALF OF FILTER HOLDER	CONTAINER	2.04 mg
FILTER NUMBER 546 / 13	CONTAINER	.53 mg
	FRONT HALF SUBTOTAL	2.57 mg

BACK HALF

IMPINGER CONTENTS AND WATER WASH OF IMPINGERS, CONNECTORS, AND BACK HALF OF FILTER HOLDER	CONTAINER	1.27 mg
	ETHER-CHLOROFORM EXTRACTION	mg
ACETONE WASH OF IMPINGERS, CONNECTORS, AND BACK HALF OF FILTER HOLDER	CONTAINER	mg
	BACK HALF SUBTOTAL	1.27 mg
	TOTAL WEIGHT	3.84 mg

MOISTURE

	1,2	3.4.5		
IMPINGERS				
FINAL VOLUME	341 ml	450	750	
INITIAL VOLUME	300 ml	-41	37	
NET VOLUME	41 ml			
SILICA GEL				
FINAL WEIGHT	276 g	g	g	
INITIAL WEIGHT	250 g	g	g	
NET WEIGHT	26 g	g	g	

4
37
26
63

TOTAL MOISTURE 63 g

TRW

625

ANALYTICAL DATA

PLANT ASARCO

DATE SEPT. 25, 1978

SAMPLING LOCATION METALLIC ARSENIC BAGHOUSE INLET

SAMPLE TYPE ARSENIC

RUN NUMBER AA-MA-3

SAMPLE BOX NUMBER

CLEAN-UP MAN STONGLEY

COMMENTS:

FRONT HALF

		LABORATORY RESULTS
ACETONE WASH OF NOZZLE, PROBE, CYCLONE (BYPASS), FLASK, FRONT HALF OF FILTER HOLDER	CONTAINER	3880.00 mg
FILTER NUMBER 545	CONTAINER	80.00 mg
FRONT HALF SUBTOTAL		3960.0 mg

BACK HALF

IMPINGER CONTENTS AND WATER WASH OF IMPINGERS, CONNECTORS, AND BACK HALF OF FILTER HOLDER	CONTAINER	.200 mg
	ETHER-CHLOROFORM EXTRACTION	mg
ACETONE WASH OF IMPINGERS, CONNECTORS, AND BACK HALF OF FILTER HOLDER	CONTAINER	mg
	BACK HALF SUBTOTAL	.200 mg
	TOTAL WEIGHT	3960.20 mg

MOISTURE

	1, 2	3, 4, 5
IMPINGERS		
FINAL VOLUME	324 ml	454
INITIAL VOLUME	300 ml	450
NET VOLUME	+24 ml	4
		+28
SILICA GEL		
FINAL WEIGHT	261 g	g g
INITIAL WEIGHT	250 g	g g
NET WEIGHT	+11 g	g g

TOTAL MOISTURE +39 g

TRW

609

ANALYTICAL DATA

PLANT ASARCO

DATE 9/19/78

SAMPLING LOCATION MATTE TAPPING

SAMPLE TYPE ARSENIC

RUN NUMBER AA - MT-1

SAMPLE BOX NUMBER

CLEAN-UP MAN

COMMENTS:

FRONT HALF

LABORATORY RESULTS

NITRIC ACID RINSE → .104

ACETONE WASH OF NOZZLE, PROBE, CYCLONE (BYPASS), FLASK, FRONT HALF OF FILTER HOLDER

CONTAINER 18.5 mg

FILTER NUMBER ~~504~~ 505

CONTAINER 90.000 mg

FRONT HALF SUBTOTAL 108.604 mg

BACK HALF

IMPINGER CONTENTS AND WATER WASH OF IMPINGERS, CONNECTORS, AND BACK HALF OF FILTER HOLDER

CONTAINER 7.000 mg

~~ETHER-CHLOROFORM EXTRACTION~~ NITRIC ACID RINSE .360 mg

ACETONE WASH OF IMPINGERS, CONNECTORS, AND BACK HALF OF FILTER HOLDER

CONTAINER mg

BACK HALF SUBTOTAL 7.360 mg

TOTAL WEIGHT 115.960 mg

MOISTURE

	1, 2	3, 4, 5	Total
IMPINGERS			
FINAL VOLUME	303 ml	452 ml	755 ml
INITIAL VOLUME	300 ml	~~+50 ml~~	~~750 ml~~
NET VOLUME	3 ml	2 ml	5 ml
SILICA GEL			
FINAL WEIGHT	269.8 g	g	g
INITIAL WEIGHT	250 g	g	g
NET WEIGHT	19.8 g	g	g

TOTAL MOISTURE 24.8 g

TRW

6B

ANALYTICAL DATA

PLANT ASARCO - Tacoma

DATE 9/20/78

SAMPLING LOCATION Matte Tapping

SAMPLE TYPE Arsenic

RUN NUMBER AA - MT - 2

SAMPLE BOX NUMBER

CLEAN-UP MAN Sanfeux/DePilo

COMMENTS:

FRONT HALF

		LABORATORY RESULTS
ACETONE WASH OF NOZZLE, PROBE, CYCLONE (BYPASS), FLASK, FRONT HALF OF FILTER HOLDER	CONTAINER	22.4 mg
FILTER NUMBER 508	CONTAINER	475.000 mg
FRONT HALF SUBTOTAL		497.400 mg

BACK HALF

IMPINGER CONTENTS AND WATER WASH OF IMPINGERS, CONNECTORS, AND BACK HALF OF FILTER HOLDER	CONTAINER	.405 mg
	ETHER-CHLOROFORM EXTRACTION	mg
ACETONE WASH OF IMPINGERS, CONNECTORS, AND BACK HALF OF FILTER HOLDER	CONTAINER	mg
	BACK HALF SUBTOTAL	.405 mg
	TOTAL WEIGHT	497.805 mg

MOISTURE

	1+2	3,4,5	Total
IMPINGERS			
FINAL VOLUME	326 ml	417ml	743ml
INITIAL VOLUME	300 ml	450ml	750ml
NET VOLUME	26 ml	-33ml	-7ml
SILICA GEL			
FINAL WEIGHT	269.6 g	g	g
INITIAL WEIGHT	250 g	g	g
NET WEIGHT	19.6 g	g	g

TOTAL MOISTURE 12.6 %

TRW

615

ANALYTICAL DATA

PLANT ASARCO - Tacoma

DATE 9/21/78

SAMPLING LOCATION Matte Tapping

SAMPLE TYPE Arsenic

RUN NUMBER AA-MT-3

SAMPLE BOX NUMBER

CLEAN-UP MAN JONGLEUX

COMMENTS:

FRONT HALF

		LABORATORY RESULTS
ACETONE WASH OF NOZZLE, PROBE, CYCLONE (BYPASS), FLASK, FRONT HALF OF FILTER HOLDER	CONTAINER	20.50 mg
FILTER NUMBER 557	CONTAINER	455.000 mg
FRONT HALF SUBTOTAL		475.500 mg

BACK HALF

IMPINGER CONTENTS AND WATER WASH OF IMPINGERS, CONNECTORS, AND BACK HALF OF FILTER HOLDER	CONTAINER	.545 mg
	ETHER-CHLOROFORM EXTRACTION	mg
ACETONE WASH OF IMPINGERS, CONNECTORS, AND BACK HALF OF FILTER HOLDER	CONTAINER	mg
	BACK HALF SUBTOTAL	.545 mg
	TOTAL WEIGHT	476.045 mg

MOISTURE

	1+2	3,4,+5	Total
IMPINGERS		447	
FINAL VOLUME	295 ml	450ml	750ml
INITIAL VOLUME	300 ml		
NET VOLUME	-5 ml	-3	-8

SILICA GEL				
FINAL WEIGHT	271.1 g	g	g	
INITIAL WEIGHT	250 g	g	g	
NET WEIGHT	21.1 g	g	g	21.1

TOTAL MOISTURE 13.10 g

OPERATIONS OF TRW INC

TRW

612

ANALYTICAL DATA

PLANT ASARCO - Tacoma

DATE 9/20/78

SAMPLING LOCATION Calcine Duct

SAMPLE TYPE Arsenic

RUN NUMBER AA-CD-1

SAMPLE BOX NUMBER

CLEAN-UP MAN

COMMENTS:

FRONT HALF

LABORATORY RESULTS

ACETONE WASH OF NOZZLE, PROBE, CYCLONE (BYPASS), FLASK, FRONT HALF OF FILTER HOLDER

CONTAINER 52.5 mg

FILTER NUMBER 507

CONTAINER 16.30 mg

FRONT HALF SUBTOTAL 68.80 mg

BACK HALF

IMPINGER CONTENTS AND WATER WASH OF IMPINGERS, CONNECTORS, AND BACK HALF OF FILTER HOLDER

CONTAINER .52 mg

ETHER-CHLOROFORM EXTRACTION mg

ACETONE WASH OF IMPINGERS, CONNECTORS, AND BACK HALF OF FILTER HOLDER

CONTAINER mg

BACK HALF SUBTOTAL .52 mg

TOTAL WEIGHT 69.32 mg

MOISTURE

	1+2	3,4+5	Total
IMPINGERS			
FINAL VOLUME	306 ml	446ml	752ml
INITIAL VOLUME	300 ml	450ml	750ml
NET VOLUME	6 ml	-4ml	2ml
SILICA GEL			
FINAL WEIGHT	254.0 g	g	g
INITIAL WEIGHT	250 g	g	g
NET WEIGHT	4.0 g	g	g

TOTAL MOISTURE 6.0 g

TRW

617

ANALYTICAL DATA

PLANT ASARCO

DATE 9/20/78

SAMPLING LOCATION CALCINING DUCT

SAMPLE TYPE ARSENIC

RUN NUMBER AA-CD-2

SAMPLE BOX NUMBER

CLEAN-UP MAN

COMMENTS:

FRONT HALF

		LABORATORY RESULTS
ACETONE WASH OF NOZZLE, PROBE, CYCLONE (BYPASS), FLASK, FRONT HALF OF FILTER HOLDER	CONTAINER	61.300 mg
FILTER NUMBER 555	CONTAINER	32.500 mg
FRONT HALF SUBTOTAL		93.800 mg

BACK HALF

IMPINGER CONTENTS AND WATER WASH OF IMPINGERS, CONNECTORS, AND BACK HALF OF FILTER HOLDER	CONTAINER	2.200 mg
	ETHER-CHLOROFORM EXTRACTION	mg
ACETONE WASH OF IMPINGERS, CONNECTORS, AND BACK HALF OF FILTER HOLDER	CONTAINER	mg
	BACK HALF SUBTOTAL	mg
	TOTAL WEIGHT	96.000 mg

MOISTURE

	1+2	3,4,+5	Total
IMPINGERS			
FINAL VOLUME	294 ml	446ml	940ml
INITIAL VOLUME	300 ml	450ml	750ml
NET VOLUME	-6 ml	-4ml	-10ml
SILICA GEL			
FINAL WEIGHT	251.0 g	g	g
INITIAL WEIGHT	250 g	g	g
NET WEIGHT	g	g	g

+1.0

TOTAL MOISTURE -6.0 g

TRW

618

ANALYTICAL DATA

PLANT ASARCO

DATE 9/22/78

SAMPLING LOCATION CALCINE DUCT

SAMPLE TYPE ARSENIC

RUN NUMBER AA-CD-3

SAMPLE BOX NUMBER

CLEAN-UP MAN JONGLEUX

COMMENTS:

FRONT HALF

		LABORATORY RESULTS
ACETONE WASH OF NOZZLE, PROBE, CYCLONE (BYPASS), FLASK, FRONT HALF OF FILTER HOLDER	CONTAINER	85.8 mg
FILTER NUMBER 540 & 548	CONTAINER	8.25 mg
	FRONT HALF SUBTOTAL	94.05 mg

BACK HALF

IMPINGER CONTENTS AND WATER WASH OF IMPINGERS, CONNECTORS, AND BACK HALF OF FILTER HOLDER	CONTAINER	1.800 mg
	ETHER-CHLOROFORM EXTRACTION	mg
ACETONE WASH OF IMPINGERS, CONNECTORS, AND BACK HALF OF FILTER HOLDER	CONTAINER	mg
	BACK HALF SUBTOTAL	94.850 mg
	TOTAL WEIGHT	mg

MOISTURE

	192	345	FINAL
IMPINGERS			
FINAL VOLUME	296 ml	446	742
INITIAL VOLUME	300 ml	450	750
NET VOLUME	-4 ml	-4	-8
SILICA GEL			
FINAL WEIGHT	256 g	g	g
INITIAL WEIGHT	250 g	g	g
NET WEIGHT	6 g	g	g

TOTAL MOISTURE 0 g

SAMPLE INFORMATION
FOR LABORATORY OPERATIONS

DATE RECEIVED 9-29-78 LAB NO. 277

SAMPLING DATA

GEOGRAPHICAL ORIGIN Tacoma, Wash. - Asarco
SAMPLING LOCATION [illegible]
SAMPLE TYPE Silica gel [illegible]
SAMPLE NUMBERS [illegible]
SAMPLING METHOD [illegible] gasoline train
SAMPLED BY D. Powell DATE SAMPLED [illegible]
CONTAINER TYPE [illegible] glass/polyethylene SAMPLE VOLUME
SAMPLE MATRIX

LOG REMARKS

ANALYTICAL DATA

DATE REPORT DUE

SAMPLE NO.	PARAMETERS	ANALYTICAL METHOD	VALUES ng	DATE OF ANALYSIS	REMARKS
-1	As	EPA As method	90,000	12-1-78	filter #505
-2	As	↓	18,500	12-4-78	Probe rinse NaOH 240 ml
-3	As	↓	240	12-3-78	rinse (HNO_3) 104 ml
-4	As	↓	7000	12-3-78	imp 1+2 ($NaCO_3$) 520 ml
-5	As	↓	360	12-3-78	imp 1+2 HNO_3 wash 66 ml
-6	SO_2	method 6			imp 4,5,6 74.5

SAMPLE INFORMATION
FOR LABORATORY OPERATIONS

DATE RECEIVED 9-29-75 LAB NO. 239

SAMPLING DATA

GEOGRAPHICAL ORIGIN Tacoma, Wash - Asarco
SAMPLING LOCATION [illegible]
SAMPLE TYPE Silver, circuit rinse, Wash Tank, H2O, Zn
SAMPLE NUMBERS A1-1T-2
SAMPLING METHOD EPA As sampling [illegible]
SAMPLED BY D. Powell DATE SAMPLED 9-29-75
CONTAINER TYPE [illegible] SAMPLE VOLUME
SAMPLE MATRIX

LOG REMARKS

ANALYTICAL DATA

DATE REPORT DUE

SAMPLE NO.	PARAMETERS	ANALYTICAL METHOD	VALUES ug As	DATE OF ANALYSIS	REMARKS
-1	As	EPA As method	475,000	12-4-75	Filter cake
-2	As	↓	22,400	12-4-75	Circuit rinse 280 ml
-3	As	↓	405	12-8-78	[illegible]
-4	SO_2	method 8			[illegible] H_2O_2 672 ml

SAMPLE INFORMATION

FOR LABORATORY OPERATIONS

DATE RECEIVED 9-29-78 LAB NO. 279

SAMPLING DATA

GEOGRAPHICAL ORIGIN Tacoma Wash - Asarco

SAMPLING LOCATION [illegible]

SAMPLE TYPE [illegible]

SAMPLE NUMBERS [illegible]

SAMPLING METHOD EPA [illegible]

SAMPLED BY D. Powell DATE SAMPLED [illegible]

CONTAINER TYPE Amber Glass / polyethylene SAMPLE VOLUME

SAMPLE MATRIX

LOG REMARKS

ANALYTICAL DATA

DATE REPORT DUE

SAMPLE NO.	PARAMETERS	ANALYTICAL METHOD	VALUES	DATE OF ANALYSIS	REMARKS
-1	As	Emp As method	455,000	12-4-78	filter 55%
-2	As	↓	20,500	12-4-78	Acid rinse NaOH 271 ml
-3	As	↓	545	12-3-78	Imp 1,2 NaOH 425 ml
-4	SO_2	method 4			Imp 4,5,6 H_2O_2 688 ml

SAMPLE INFORMATION
FOR LABORATORY OPERATIONS

DATE RECEIVED 9-29-78 LAB NO. 280

SAMPLING DATA

GEOGRAPHICAL ORIGIN Tacoma, Wash - Asarco
SAMPLING LOCATION C D
SAMPLE TYPE [illegible]
SAMPLE NUMBERS AA-CD-1 / 512
SAMPLING METHOD EPA [illegible] sampling train
SAMPLED BY D. [illegible] DATE SAMPLED 9-20-78
CONTAINER TYPE Lower glass / [illegible] SAMPLE VOLUME
SAMPLE MATRIX

LOG REMARKS

ANALYTICAL DATA

DATE REPORT DUE

SAMPLE NO.	PARAMETERS	ANALYTICAL METHOD	VALUES	DATE OF ANALYSIS	REMARKS
-1	As	EPA As method	16,300	12-4-78	[illegible]
-2	As	↓	52,500	12-4-78	[illegible] rinse NaOH 505 ml
-3	As	↓	520	12-8-78	imp 1,2 NaOH 495 ml
-4	SO_2	SO_2			imp 4,5,6 H_2O_2 725

280

SAMPLE INFORMATION

FOR LABORATORY OPERATIONS

DATE RECEIVED 9-29-78 LAB NO. 281

SAMPLING DATA

GEOGRAPHICAL ORIGIN Tacoma, Wash. - Asarco

SAMPLING LOCATION [illegible]

SAMPLE TYPE [illegible] Probe rinse [illegible] Imp [illegible] H_2O_2 Imp

SAMPLE NUMBERS 11-CO-2 / 612

SAMPLING METHOD EPA As sampling train

SAMPLED BY D. [illegible] DATE SAMPLED 9-21-78

CONTAINER TYPE Amber glass / polyethylene SAMPLE VOLUME

SAMPLE MATRIX

LOG REMARKS

ANALYTICAL DATA

DATE REPORT DUE

SAMPLE NO.	PARAMETERS	ANALYTICAL METHOD	VALUES: µg/m³	DATE OF ANALYSIS	REMARKS
-1	As	EPA As method	32,500	12-4-78	filter = 555
-2	As	"	61,300	12-4-78	Probe rinse 697 ml
-3	As	↓	2[illegible].00	12-3-78	Imp 1,2 NaOH 425 ml
-4	SO_2	method 6			Imp 4,5,6 H_2O_2 725 ml

SAMPLE INFORMATION
FOR LABORATORY OPERATIONS

DATE RECEIVED 9-29-78 LAB NO. 282

SAMPLING DATA

GEOGRAPHICAL ORIGIN Tacoma, Wash. — Asarco
SAMPLING LOCATION [illegible]
SAMPLE TYPE Filter, Probe rinse [illegible] Imp. 1-2, 4-6 [illegible]
SAMPLE NUMBERS A1-[illegible]-3 [illegible]
SAMPLING METHOD EPA [illegible] sampling train
SAMPLED BY D. Powell DATE SAMPLED 4-23-78
CONTAINER TYPE Amber glass / polyethylene SAMPLE VOLUME
SAMPLE MATRIX

LOG REMARKS

ANALYTICAL DATA

DATE REPORT DUE

SAMPLE NO.	PARAMETERS	ANALYTICAL METHOD	VALUES	DATE OF ANALYSIS	REMARKS
-1	As	EPA As method	8250	12-4-78	filter 5+8 or 5+6
-2	As	↓	85,800	12-4-78	Probe rinse H2O- 715 ml
-3	As	↓	800	12-3-78	Imp 1,2 H2O- 870 ml
-4	SO_2	method 8			Imp 4,5,6 H_2O_2 825 ml

SAMPLE INFORMATION
FOR LABORATORY OPERATIONS

DATE RECEIVED 9-29-78 LAB NO. 273

SAMPLING DATA

GEOGRAPHICAL ORIGIN Tacoma [illegible]
SAMPLING LOCATION Electrostatic [illegible]
SAMPLE TYPE Filter, [illegible] probe rinse, NaOH imp.
SAMPLE NUMBERS [illegible] 1 / 600 ; [illegible] rinse, H_2O_2 imp
SAMPLING METHOD EPA Arsenic Sampling train
SAMPLED BY D. Bowell DATE SAMPLED 9-15-78
CONTAINER TYPE Amber glass / polypropylene SAMPLE VOLUME
SAMPLE MATRIX

LOG REMARKS

ANALYTICAL DATA

DATE REPORT DUE

SAMPLE NO.	PARAMETERS	ANALYTICAL METHOD	VALUES	DATE OF ANALYSIS	REMARKS
-1	As	EPA As method	14,500	12-4-78	filter #500
-2	As	↓	52,200	12-4-78	Probe rinse NaOH 180 ml
-3	As	↓	920	12-3-78	Probe rinse HNO_3 205 ml
-4	As	↓	50	12-8-78	Imp 1,2 rinse HNO_3 99 ml
-5	As	↓	1500	12-3-78	Imp 1,2 NaOH 297 ml
-6	SO_2	Method 8			Imp 4,5,6 H_2O_2 258 ml

SAMPLE INFORMATION

FOR LABORATORY OPERATIONS

DATE RECEIVED 9-20-78 LAB NO. 284

SAMPLING DATA

GEOGRAPHICAL ORIGIN Tacoma Wash - Asarco

SAMPLING LOCATION [illegible]

SAMPLE TYPE Filter [illegible] probe rinse [illegible] NaOH rinse, [illegible] H_2O_2 imp

SAMPLE NUMBERS [illegible]

SAMPLING METHOD EPA As sampling [illegible]

SAMPLED BY [illegible] DATE SAMPLED [illegible]-78

CONTAINER TYPE [illegible] SAMPLE VOLUME

SAMPLE MATRIX

LOG REMARKS

ANALYTICAL DATA

DATE REPORT DUE

SAMPLE NO.	PARAMETERS	ANALYTICAL METHOD	VALUES	DATE OF ANALYSIS	REMARKS
-1	As	EPA As method	14,000	12-4-78	filter # 551
-2	As	↓	22,400	12-4-78	probe rinse [illegible] 745 ml
-3	As	↓	560	12-3-78	probe rinse [illegible] [illegible] ml
-4	As	↓	39	12-8-78	Imp 1,2 rinse [illegible] 84 ml
-5	As	↓	730	12-8-78	Imp 1,2 NaOH 515 ml
-6	SO_2	method 8			Imp 4,5,6 H_2O_2 203 ml

[illegible] 270 [illegible]

SAMPLE INFORMATION

FOR LABORATORY OPERATIONS

DATE RECEIVED 12-29-78 LAB NO. 285

SAMPLING DATA

GEOGRAPHICAL ORIGIN Tacoma Washington

SAMPLING LOCATION [illegible]

SAMPLE TYPE Filter, probe rinse, NaOH, imp. Imp H_2O_2

SAMPLE NUMBERS [illegible]

SAMPLING METHOD EPA As sampling train

SAMPLED BY [illegible] DATE SAMPLED 12-19-78

CONTAINER TYPE Amber glass Bottles SAMPLE VOLUME

SAMPLE MATRIX

LOG REMARKS

ANALYTICAL DATA

DATE REPORT DUE

SAMPLE NO.	PARAMETERS	ANALYTICAL METHOD	VALUES	DATE OF ANALYSIS	REMARKS
-1	As	EPA As method	8,000	12-4-78	filter #503
-2	As		6,000	12-3-78	probe rinse NaOH 707 ml
-3	As		1,600	12-3-78	imp 1,2 NaOH 530 ml
-4	SO_2	SO_2			imp 3,5 H_2O_2 756 ml

2
550
[illegible]
[illegible]
707

SAMPLE INFORMATION
FOR LABORATORY OPERATIONS

DATE RECEIVED 9-29-78 LAB NO. 286

SAMPLING DATA

GEOGRAPHICAL ORIGIN Tacoma Wash. - Asarco
SAMPLING LOCATION
SAMPLE TYPE Probe rinse [illegible] rinse
SAMPLE NUMBERS AL-ST-1/610 : Imp [illegible] Imp H_2O_2
SAMPLING METHOD [illegible] sampling train
SAMPLED BY [illegible] DATE SAMPLED [illegible]
CONTAINER TYPE Amber glass/[illegible] SAMPLE VOLUME
SAMPLE MATRIX

LOG REMARKS

ANALYTICAL DATA

DATE REPORT DUE

SAMPLE NO.	PARAMETERS	ANALYTICAL METHOD	VALUES	DATE OF ANALYSIS	REMARKS
-1	As	EPA As method	19,500	12-1-78	filter - 504
-2	As		1,600	12-3-78	Probe rinse [illegible] 283 ml
-3	As		490	12-8-78	Probe rinse [illegible] 124 ml
-4	As		36	12-8-78	imp 1,2 rinse [illegible] 90 ml
-5	As		425	12-8-78	imp 1,2 NaOH 518
-6	SO_2	method 8			imp 4,5,6 H_2O_2 740 ml

SAMPLE INFORMATION

FOR LABORATORY OPERATIONS

DATE RECEIVED 9-29-78 LAB NO. 287

SAMPLING DATA

GEOGRAPHICAL ORIGIN Tacoma Wash - Asarco

SAMPLING LOCATION [illegible]

SAMPLE TYPE [illegible]

SAMPLE NUMBERS [illegible]

SAMPLING METHOD EPA [illegible]

SAMPLED BY D. [illegible] DATE SAMPLED 9-20-78

CONTAINER TYPE Amber glass/[illegible] SAMPLE VOLUME

SAMPLE MATRIX

LOG REMARKS

ANALYTICAL DATA

DATE REPORT DUE

SAMPLE NO.	PARAMETERS	ANALYTICAL METHOD	VALUES	DATE OF ANALYSIS	REMARKS
-1	As	EPA As method	49,000	12-4-78	filter = 405
-2	As	↓	6,000	12-3-78	Fresh rinse water 430 ml
-3	As	↓	115	12-8-78	[illegible] = water 410 ml
-4	SO_2	method 9			Imp - [illegible] SO_2 735 ml

SAMPLE INFORMATION
FOR LABORATORY OPERATIONS

DATE RECEIVED 7-29-78 LAB NO. 255

SAMPLING DATA

GEOGRAPHICAL ORIGIN Tacoma, Wash. - Asarco
SAMPLING LOCATION [illegible]
SAMPLE TYPE [illegible] H_2O_2 imp
SAMPLE NUMBERS [illegible] / 616
SAMPLING METHOD [illegible]
SAMPLED BY D. [illegible] DATE SAMPLED [illegible]
CONTAINER TYPE [illegible] SAMPLE VOLUME
SAMPLE MATRIX

LOG REMARKS

ANALYTICAL DATA

DATE REPORT DUE

SAMPLE NO.	PARAMETERS	ANALYTICAL METHOD	VALUES	DATE OF ANALYSIS	REMARKS
-1	As	EPA As method	22,500	12-4-78	[illegible]
-2	As	↓	550	12-3-78	Probe rinse NaOH 300 ml
-3	As	✓	90	12-8-78	Imp 2 NaOH 400 ml
-4	SO_2	method 8			Imp 4,5 H_2O_2 750 ml

126
[illegible]

SAMPLE INFORMATION

FOR LABORATORY OPERATIONS

DATE RECEIVED 9-29-78 LAB NO. 289

SAMPLING DATA

GEOGRAPHICAL ORIGIN Tacoma Wash - Asarco

SAMPLING LOCATION Smelter outlet

SAMPLE TYPE [illegible]

SAMPLE NUMBERS [illegible]-80-1 / 601 [illegible]

SAMPLING METHOD EPA [illegible] sampling train

SAMPLED BY [illegible] DATE SAMPLED 9-15-78

CONTAINER TYPE [illegible] SAMPLE VOLUME

SAMPLE MATRIX

LOG REMARKS

ANALYTICAL DATA

DATE REPORT DUE

SAMPLE NO.	PARAMETERS	ANALYTICAL METHOD	VALUES, [illegible]	DATE OF ANALYSIS	REMARKS
-1	As	EPA As method	575	12-3-78	filter 509
-2	As		790	12-3-78	Probe rinse NaOH [illegible]
-3	As		170	12-3-78	Probe rinse HNO_3 [illegible]
-4	As		80	12-8-78	Imp 1-2, NaOH 450 ml
-5	SO_2	method 2			Imp 4,5,6 H_2O_2 875 ml

SAMPLE INFORMATION
FOR LABORATORY OPERATIONS

DATE RECEIVED 9-29-78 LAB NO. 290

SAMPLING DATA

GEOGRAPHICAL ORIGIN Tacoma, Wash. - Asarco
SAMPLING LOCATION Roaster outlet
SAMPLE TYPE Filter NaOH Probe rinse HNO3 Probe rinse NaOH Imp H2O2 Imp
SAMPLE NUMBERS A1-80-2 / 2C1
SAMPLING METHOD EPA As sampling train
SAMPLED BY D. Powell DATE SAMPLED 9-15-78
CONTAINER TYPE Amber glass/polypropylene SAMPLE VOLUME
SAMPLE MATRIX
LOG REMARKS

ANALYTICAL DATA

DATE REPORT DUE

SAMPLE NO.	PARAMETERS	ANALYTICAL METHOD	VALUES	DATE OF ANALYSIS	REMARKS
-1	As	EPA As method	625	12-3-78	Filter 5501
-2	As	↓	800	12-3-78	Probe rinse NaOH 146 ml
-3	As	↓	185	12-8-78	Probe rinse HNO3 78 ml
-4	As	↓	105	12-8-78	Impinger 1,2, NaOH 575 ml
-5	SO_2	method 8			Imp 4,5,6 H_2O_2 795 ml
-6	As	EPA As method	25	12-8-78	Imp 1,2 rinse HNO3 170 ml

SAMPLE INFORMATION

FOR LABORATORY OPERATIONS

DATE RECEIVED 9-29-78 LAB NO. 291

SAMPLING DATA

GEOGRAPHICAL ORIGIN Tacoma, Wash. - Asarco

SAMPLING LOCATION Roaster outlet

SAMPLE TYPE Filter, NaOH probe rinse, HNO3 probe rinse, NaOH imp., H2O2 imp.

SAMPLE NUMBERS AA-RO-3 / 605

SAMPLING METHOD EPA As sampling train

SAMPLED BY D. Burrell DATE SAMPLED 9-16-78

CONTAINER TYPE Amber glass/polyethylene SAMPLE VOLUME

SAMPLE MATRIX

LOG REMARKS

ANALYTICAL DATA

DATE REPORT DUE

SAMPLE NO.	PARAMETERS	ANALYTICAL METHOD	VALUES	DATE OF ANALYSIS	REMARKS
-1	As	EPA As method	275	12-3-78	filter SSC2
-2	As	↓	930	12-3-78	probe rinse NaOH 372 ml
-3	As	↓	545	12-8-78	probe rinse HNO3 217 ml
-4	As	↓	11	12-8-78	Imp 1,2 rinse HNO3 121 ml
-5	As	↓	2200	12-8-78	Imp 1,2 NaOH 535 ml
-6	SO2	method 8			Imp 4,5,6, H2O2 780 ml

255
117
372

SAMPLE INFORMATION

FOR LABORATORY OPERATIONS

DATE RECEIVED 9-29-78 LAB NO. 292

SAMPLING DATA

GEOGRAPHICAL ORIGIN Tacoma, Wash. - Asarco

SAMPLING LOCATION Smelter stack

SAMPLE TYPE filter, NaOH probe rinse, [illegible] rinse, [illegible], H_2O_2 imp.

SAMPLE NUMBERS AS-DT-1 / [illegible]

SAMPLING METHOD EPA As sampling train

SAMPLED BY D. Burrell DATE SAMPLED 9-15-78

CONTAINER TYPE [illegible] SAMPLE VOLUME

SAMPLE MATRIX

LOG REMARKS

ANALYTICAL DATA

DATE REPORT DUE

SAMPLE NO.	PARAMETERS	ANALYTICAL METHOD	VALUES	DATE OF ANALYSIS	REMARKS
-1	As	EPA As method	4,300	12-4-78	filter # 520
-2	As	↓	382,000	12-4-78	Probe rinse NaOH 531 ml
-3	As	↓	1,000	12-3-78	Probe rinse H_2O_2 70 ml
-4	As	↓	600	12-3-78	Imp 1,2 NaOH 418 ml
-5	SO_2	method 8			Imp 4,5,6 H_2O_2 730 ml

22
78
156
195
531

SAMPLE INFORMATION
FOR LABORATORY OPERATIONS

DATE RECEIVED 9-29-78 LAB NO. 293

SAMPLING DATA

GEOGRAPHICAL ORIGIN Tacoma Wash — Asarco
SAMPLING LOCATION Roaster Inlet
SAMPLE TYPE Filter NaOH Probe rinse HNO3 Probe rinse Water rinse NaOH imp H2O2 imp.
SAMPLE NUMBERS AA-RI-2 / 403
SAMPLING METHOD EPA As sampling train
SAMPLED BY D. Burrell DATE SAMPLED 9-15-78
CONTAINER TYPE Amber glass / Polyethylene SAMPLE VOLUME
SAMPLE MATRIX

LOG REMARKS

ANALYTICAL DATA

DATE REPORT DUE

SAMPLE NO.	PARAMETERS	ANALYTICAL METHOD	VALUES	DATE OF ANALYSIS	REMARKS
-1	As	EPA As method	36,000	12-4-78	filter 550
-2	As	↓	402,000	12-4-78	Probe rinse NaOH 402 ml
-3	As	↓	2,[illegible]	12-3-78	Probe rinse HNO3 138 ml
-4	As	↓	100	12-8-78	imp rinse HNO3 148 ml
-5	As	↓	4,100	12-3-78	Imp 1,2, NaOH 480 ml
-6	SO_2	method 8			Imp 4,5,6 H_2O_2 635 ml

SAMPLE INFORMATION
FOR LABORATORY OPERATIONS

DATE RECEIVED 9-29-78 LAB NO. 294

SAMPLING DATA

GEOGRAPHICAL ORIGIN Tacoma, Wash. - Asarco
SAMPLING LOCATION Roaster Inlet
SAMPLE TYPE Filter, NaOH Probe rinse, NaOH Imp rinse
SAMPLE NUMBERS [illegible] / 606 NaOH Imp H_2O_2 Imp
SAMPLING METHOD EPA [illegible] sampling train
SAMPLED BY D. Powell DATE SAMPLED 9-16-78
CONTAINER TYPE [illegible] SAMPLE VOLUME
SAMPLE MATRIX

LOG REMARKS

ANALYTICAL DATA

DATE REPORT DUE

SAMPLE NO.	PARAMETERS	ANALYTICAL METHOD	VALUES	DATE OF ANALYSIS	REMARKS
-1	As	EPA As method	28,500	12-4-78	filter = 521
-2	As	↓	301,000	12-4-78	Probe rinse NaOH 836 ml
-3	As	↓	3,000	12-3-78	Probe rinse $KMnO_4$ 220 ml
-4	As	↓	113	12-8-78	Imp 1,2 rinse $KMnO_4$ 84 ml
-5	As	↓	3,000	12-3-78	Imp 1,2 NaOH 225 ml
-6	SO_2	method 8			Imp 4,5,6 H_2O_2 685 ml

21
239
260
263
74
836

SAMPLE INFORMATION
FOR LABORATORY OPERATIONS

DATE RECEIVED 9-20-78 LAB NO. 245

SAMPLING DATA

GEOGRAPHICAL ORIGIN Tacoma, Wash. - Asarco
SAMPLING LOCATION [illegible]
SAMPLE TYPE Filter [illegible]
SAMPLE NUMBERS [illegible] / 620
SAMPLING METHOD EPA [illegible] train
SAMPLED BY [illegible] DATE SAMPLED 9-24-78
CONTAINER TYPE Amber Glass/polypropylene SAMPLE VOLUME
SAMPLE MATRIX

LOG REMARKS

ANALYTICAL DATA

DATE REPORT DUE

SAMPLE NO.	PARAMETERS	ANALYTICAL METHOD	VALUES	DATE OF ANALYSIS	REMARKS
-1	As	EPA As method	540,000	12-4-78	filter 552
-2	As	↓	2,500,000	12-4-78	proc rinse NaOH 747 ml
-3	As	↓	800	12-8-78	Imp 1,2 NaOH 520 ml
-4	SO_2	method 8			Imp 4,5 H_2O_2 875 ml

SAMPLE INFORMATION

FOR LABORATORY OPERATIONS

DATE RECEIVED 9-29-77 LAB NO. 296

SAMPLING DATA

GEOGRAPHICAL ORIGIN Tacoma Wash - Asarco

SAMPLING LOCATION [illegible]

SAMPLE TYPE [illegible] Probe rinse NaOH [illegible]

SAMPLE NUMBERS 522 AA-AK-2

SAMPLING METHOD EPA As sampling train

SAMPLED BY D. [illegible] DATE SAMPLED

CONTAINER TYPE [illegible] SAMPLE VOLUME

SAMPLE MATRIX

LOG REMARKS

ANALYTICAL DATA

DATE REPORT DUE

SAMPLE NO.	PARAMETERS	ANALYTICAL METHOD	VALUES	DATE OF ANALYSIS	REMARKS
-1	As	EPA As method	840,000	12-4-78	filter 549
-2	As	↓	525,000	12-4-78	Kimwipe
-3	As	↓	2,3[illegible]	12-4-78	Probe rinse [illegible] 170 ml
-4	As	↓	16,200	12-4-78	Probe rinse HNO_3 170 ml
-5	As	↓	150	12-3-78	Imp 1-2 NaOH - 495 ml
-6	SO_2	method 8			Imp 3,5,6 H_2O_2 720 ml

SAMPLE INFORMATION
FOR LABORATORY OPERATIONS

DATE RECEIVED 9-29-78 LAB NO. 297

SAMPLING DATA

GEOGRAPHICAL ORIGIN Tacoma Wash - Asarco
SAMPLING LOCATION [illegible]
SAMPLE TYPE [illegible]
SAMPLE NUMBERS [illegible] / 626
SAMPLING METHOD
SAMPLED BY DATE SAMPLED 9-25-78
CONTAINER TYPE SAMPLE VOLUME
SAMPLE MATRIX

LOG REMARKS

ANALYTICAL DATA

DATE REPORT DUE

SAMPLE NO.	PARAMETERS	ANALYTICAL METHOD	VALUES	DATE OF ANALYSIS	REMARKS
-1	As	Eff As method	370,000	12-4-78	Filter #544
-2	As		3,030,000	12-4-78	Proc rinse NaOH 740ml
-3	As	↓	960	12-5-78	Imp 2 NaOH 730ml
-4	SO_2	method 8			Imp [illegible] 885 ml

SAMPLE INFORMATION

FOR LABORATORY OPERATIONS

DATE RECEIVED 9-22-78 LAB NO. 298

SAMPLING DATA

GEOGRAPHICAL ORIGIN Tacoma, Wash - Asarco

SAMPLING LOCATION Electric Precipitator outlet

SAMPLE TYPE Silica H_2O_4 SO_2 [illegible] NaOH [illegible] H_2O_2 imp

SAMPLE NUMBERS [illegible]-30-1 621

SAMPLING METHOD EPA As sampling train

SAMPLED BY D. Powell DATE SAMPLED 9-[illegible]-78

CONTAINER TYPE Amber glass SAMPLE VOLUME

SAMPLE MATRIX

LOG REMARKS

ANALYTICAL DATA

DATE REPORT DUE

SAMPLE NO.	PARAMETERS	ANALYTICAL METHOD	VALUES	DATE OF ANALYSIS	REMARKS
-1	As	EPA As method	700	12-3-78	filter [illegible]
-2	As	↓	134,000	12-4-78	Probe [illegible] 395 ml
-3	As	↓	424	12-8-78	Imp 2 NaOH 537 ml
-4	SO_2	method 8			Imp 4,5,6 H_2O_2 885 ml

SAMPLE INFORMATION

FOR LABORATORY OPERATIONS

DATE RECEIVED 9-29-78 LAB NO. 279

SAMPLING DATA

GEOGRAPHICAL ORIGIN Tacoma Wash - [illegible]

SAMPLING LOCATION [illegible]

SAMPLE TYPE [illegible] H_2O_2 imp

SAMPLE NUMBERS [illegible]-2

SAMPLING METHOD EPA [illegible] sampling train

SAMPLED BY D. Powell DATE SAMPLED 9-25-78

CONTAINER TYPE Amber glass SAMPLE VOLUME

SAMPLE MATRIX

LOG REMARKS

ANALYTICAL DATA

DATE REPORT DUE

SAMPLE NO.	PARAMETERS	ANALYTICAL METHOD	VALUES	DATE OF ANALYSIS	REMARKS
-1	As	EPA As method	625	12-3-78	[illegible]
-2	As	↓	37,700	12-4-78	Probe wash [illegible] 250 ml
-3	As	↓	540	12-5-78	Probe wash H_2O_2 [illegible]
-4	As	↓	85	12-8-78	Imp [illegible] 224 ml
-5	As	↓	330	12-8-78	Imp [illegible] H_2O_2 520 ml
-6	SO_2	method 8			Imp 4,5,6 H_2O_2 815 ml

SAMPLE INFORMATION

FOR LABORATORY OPERATIONS

DATE RECEIVED 9-22-77 LAB NO. 300

SAMPLING DATA

GEOGRAPHICAL ORIGIN Tacoma Utah — Smelter

SAMPLING LOCATION [illegible] Outlet

SAMPLE TYPE Silver [illegible] H_2O_2 imp

SAMPLE NUMBERS [illegible]

SAMPLING METHOD EPA As Sampling train

SAMPLED BY D Powell DATE SAMPLED 9-[illegible]

CONTAINER TYPE [illegible] glass SAMPLE VOLUME

SAMPLE MATRIX

LOG REMARKS

ANALYTICAL DATA

DATE REPORT DUE

SAMPLE NO.	PARAMETERS	ANALYTICAL METHOD	VALUES	DATE OF ANALYSIS	REMARKS
-1	As	[illegible] method	3,000	12-4-78	Filter [illegible]
-2	As		212,000	12-4-78	Probe rinse NaOH 450 ml
-3	As		1300	12-5-78	Imp 1,2 NaOH 658 ml
-4	SO_2	method 8			Imp 4,5,6 H_2O_2 975 ml

SAMPLE INFORMATION
FOR LABORATORY OPERATIONS

DATE RECEIVED 9-29-78 LAB NO. 301

SAMPLING DATA

GEOGRAPHICAL ORIGIN Tacoma, Wash — Asarco
SAMPLING LOCATION [illegible]
SAMPLE TYPE [illegible]
SAMPLE NUMBERS AA-[illegible]-1 / 610
SAMPLING METHOD [illegible]
SAMPLED BY [illegible] DATE SAMPLED [illegible]
CONTAINER TYPE [illegible] SAMPLE VOLUME
SAMPLE MATRIX

LOG REMARKS

ANALYTICAL DATA

DATE REPORT DUE

SAMPLE NO.	PARAMETERS	ANALYTICAL METHOD	VALUES	DATE OF ANALYSIS	REMARKS
-1	As	EPA As method	173,000	12-4-78	[illegible] 553
-2	As		4,450,000	12-4-78	Probe rinse HNO3 530 mL
-3	As		840	12-8-78	Imp 1,2 NaOH 520 mL
-4	SO_2	method 8			Imp 4,5,6 H_2O_2 910 mL

SAMPLE INFORMATION

FOR LABORATORY OPERATIONS

DATE RECEIVED 9-29-78 LAB NO. 302

SAMPLING DATA

GEOGRAPHICAL ORIGIN Tacoma, Wash - Asarco

SAMPLING LOCATION [illegible] arsenic

SAMPLE TYPE [illegible] H_2O_2 imp

SAMPLE NUMBERS [illegible]-2

SAMPLING METHOD [illegible] Sampling train

SAMPLED BY [illegible] Dowell DATE SAMPLED [illegible]

CONTAINER TYPE Lower Glass SAMPLE VOLUME

SAMPLE MATRIX

LOG REMARKS

ANALYTICAL DATA

DATE REPORT DUE

SAMPLE NO.	PARAMETERS	ANALYTICAL METHOD	VALUES mg/L	DATE OF ANALYSIS	REMARKS
-1	As	Std As method	530,000	12-4-78	filter = 546
-2	As		4,500	12-4-78	Kimwipe
-3	As		140	12-8-78	probe rinse HNO_3 220 mL
-4	As		1,900	12-4-78	probe rinse HNO_3 220 mL
-5	As		440	12-8-78	Imp 1 rinse HNO_3 75 mL
-6	As	✓	830	12-8-78	Imp 1-2 rinse 228 mL
-7	SO_2	method 8			Imp 4,5,6 H_2O_2 738 mL

SAMPLE INFORMATION

FOR LABORATORY OPERATIONS

DATE RECEIVED 9-22-78 LAB NO. 303

SAMPLING DATA

GEOGRAPHICAL ORIGIN [illegible]

SAMPLING LOCATION [illegible]

SAMPLE TYPE [illegible]

SAMPLE NUMBERS [illegible]

SAMPLING METHOD [illegible]

SAMPLED BY D. Powell DATE SAMPLED [illegible]

CONTAINER TYPE Amber glass SAMPLE VOLUME

SAMPLE MATRIX

LOG REMARKS

ANALYTICAL DATA

DATE REPORT DUE

SAMPLE NO.	PARAMETERS	ANALYTICAL METHOD	VALUES	DATE OF ANALYSIS	REMARKS
-1	As	EPA As method	80000	12-4-78	[illegible]
-2	As	↓	3660000	12-4-78	Probe rinse NaOH [illegible]
-3	As	↓	200	12-3-78	Imp 1,2 NaOH [illegible]
-4	SO_2	method 8			Imp 3,4 H_2O_2 850 ml

SAMPLE INFORMATION
FOR LABORATORY OPERATIONS

DATE RECEIVED 9-29-78 LAB NO. 304

SAMPLING DATA

GEOGRAPHICAL ORIGIN Tacoma Wash - Asarco
SAMPLING LOCATION [illegible]
SAMPLE TYPE [illegible]
SAMPLE NUMBERS [illegible]
SAMPLING METHOD [illegible]
SAMPLED BY D. [illegible] DATE SAMPLED [illegible]
CONTAINER TYPE [illegible] SAMPLE VOLUME
SAMPLE MATRIX

LOG REMARKS

ANALYTICAL DATA

DATE REPORT DUE

SAMPLE NO.	PARAMETERS	ANALYTICAL METHOD	VALUES	DATE OF ANALYSIS	REMARKS
-1	As	EPA As method	430,000	12-4-78	filter = 506
-2	As	↓	750	12-8-78	Probe rinse NaOH 322 ml
-3	As	↓	85	12-8-78	Imp 1,2 NaOH 525 ml
-4	SO_2	Method 8			Imp 4,5,6 H_2O_2 637 ml

SAMPLE INFORMATION

FOR LABORATORY OPERATIONS

DATE RECEIVED 9-29-78 LAB NO. 236

SAMPLING DATA

GEOGRAPHICAL ORIGIN Tacoma, Wash. - Asarco

SAMPLING LOCATION [illegible] #1 Roaster Bldg

SAMPLE TYPE [illegible]

SAMPLE NUMBERS [illegible]

SAMPLING METHOD [illegible]

SAMPLED BY [illegible] DATE SAMPLED [illegible]

CONTAINER TYPE [illegible] SAMPLE VOLUME

SAMPLE MATRIX

LOG REMARKS

ANALYTICAL DATA

DATE REPORT DUE

SAMPLE NO.	PARAMETERS	ANALYTICAL METHOD	VALUES	DATE OF ANALYSIS	REMARKS
-1	As	oxal acid	0.61%	12-3-79	#1 Pipe tunnel
-2	As	digestion	69%	12-4-78	As [illegible]
-3	As	[illegible] → flame AA	3.3%	12-5-78	#1 Roaster bldg house dust

SAMPLE INFORMATION
FOR LABORATORY OPERATIONS

DATE RECEIVED [illegible] LAB NO. 275

SAMPLING DATA

GEOGRAPHICAL ORIGIN Tacoma Wash. - Asarco
SAMPLING LOCATION [illegible]
SAMPLE TYPE [illegible]
SAMPLE NUMBERS [illegible]
SAMPLING METHOD [illegible]
SAMPLED BY [illegible] DATE SAMPLED [illegible] 21-78
CONTAINER TYPE [illegible] SAMPLE VOLUME
SAMPLE MATRIX

LOG REMARKS

ANALYTICAL DATA

DATE REPORT DUE

SAMPLE NO.	PARAMETERS	ANALYTICAL METHOD	VALUES	DATE OF ANALYSIS	REMARKS
-1	As	[illegible]	23%	12-4-78	[illegible] 9-19
-2	As	digestion	0.25%	12-3-78	[illegible] 9-20
-3	As	[illegible] → [illegible]	0.23%	12-3-78	[illegible] 9-21

SAMPLE INFORMATION
FOR LABORATORY OPERATIONS

DATE RECEIVED [illegible] LAB NO. 274

SAMPLING DATA

GEOGRAPHICAL ORIGIN [illegible]
SAMPLING LOCATION [illegible]
SAMPLE TYPE [illegible]
SAMPLE NUMBERS [illegible]
SAMPLING METHOD [illegible]
SAMPLED BY [illegible] DATE SAMPLED [illegible]
CONTAINER TYPE [illegible] SAMPLE VOLUME [illegible]
SAMPLE MATRIX [illegible]

LOG REMARKS [illegible]

ANALYTICAL DATA

DATE REPORT DUE [illegible]

SAMPLE NO.	PARAMETERS	ANALYTICAL METHOD	VALUES	DATE OF ANALYSIS	REMARKS
-1	As	parr acid	1.8%	12-4-78	comp 9-15
-2	As	digestion	0.90%	12-3-78	comp 9-16
-3	As	bomb	1.12%	12-4-78	comp 9-18
-4	As	→ Sl[illegible]	0.62%	12-3-78	comp 9-19
-5	As	A.A.	0.70%	[illegible]	comp 9-20
-6	As		1.22%	[illegible]	comp 9-21
-7	As		[illegible]	[illegible]	comp [illegible]

SAMPLE INFORMATION

FOR LABORATORY OPERATIONS

DATE RECEIVED [illegible] LAB NO. [illegible]

SAMPLING DATA

GEOGRAPHICAL ORIGIN [illegible]

SAMPLING LOCATION [illegible]

SAMPLE TYPE [illegible]

SAMPLE NUMBERS [illegible]

SAMPLING METHOD [illegible]

SAMPLED BY [illegible] DATE SAMPLED [illegible]

CONTAINER TYPE [illegible] SAMPLE VOLUME [illegible]

SAMPLE MATRIX [illegible]

LOG REMARKS [illegible]

ANALYTICAL DATA

DATE REPORT DUE [illegible]

SAMPLE NO.	PARAMETERS	ANALYTICAL METHOD	VALUES	DATE OF ANALYSIS	REMARKS
-1	As	[illegible]	[illegible]	12-3-[illegible]	comp 9-19
-2	As	[illegible]	0.12%	12-3-[illegible]	comp 9-20
-3	As	[illegible]	[illegible]	12-3-[illegible]	comp 9-21

SAMPLE INFORMATION
FOR LABORATORY OPERATIONS

DATE RECEIVED 9-20-78 LAB NO. 272

SAMPLING DATA

GEOGRAPHICAL ORIGIN [illegible]
SAMPLING LOCATION [illegible]
SAMPLE TYPE [illegible]
SAMPLE NUMBERS [illegible]
SAMPLING METHOD [illegible]
SAMPLED BY [illegible] DATE SAMPLED [illegible]
CONTAINER TYPE [illegible] SAMPLE VOLUME [illegible]
SAMPLE MATRIX [illegible]

LOG REMARKS [illegible]

ANALYTICAL DATA

DATE REPORT DUE [illegible]

SAMPLE NO.	PARAMETERS	ANALYTICAL METHOD	VALUES	DATE OF ANALYSIS	REMARKS
-1	As	pair acid	0.90%	12-4-78	comp 9-15
-2	As	digestion	0.68%	12-4-78	comp 9-16
-3	As	comb →	0.59%	12-4-78	comp 9-18
-4	As	flame A.A.	0.70%	12-4-78	comp 9-19
-5	As		0.8%	12-3-78	comp 9-20
-6	As		0.65%	12-3-78	comp 9-21
-7	As		[illegible]	12-3-78	comp 9-22

SAMPLE INFORMATION
FOR LABORATORY OPERATIONS

DATE RECEIVED 9-24-78 LAB NO. 271

SAMPLING DATA

GEOGRAPHICAL ORIGIN Tacoma Wash. Asarco
SAMPLING LOCATION [illegible]
SAMPLE TYPE [illegible]
SAMPLE NUMBERS [illegible]
SAMPLING METHOD [illegible]
SAMPLED BY [illegible] DATE SAMPLED [illegible]
CONTAINER TYPE [illegible] SAMPLE VOLUME
SAMPLE MATRIX

LOG REMARKS

ANALYTICAL DATA

DATE REPORT DUE

SAMPLE NO.	PARAMETERS	ANALYTICAL METHOD	VALUES	DATE OF ANALYSIS	REMARKS
-1	As	parr acid	2.6%	12-4-78	calcine, comp 9-24
-2	As	digestion	3.5%	12-4-78	calcine comp 9-25
-3	As	bomb →	5.0%	12-4-78	charge comp 9-25
-4	As	flame AA	3.0%	12-4-78	charge comp 9-24

SAMPLE INFORMATION
FOR LABORATORY OPERATIONS

DATE RECEIVED 9-29-78 LAB NO. 270

SAMPLING DATA

GEOGRAPHICAL ORIGIN Tacoma Wash - Asarco
SAMPLING LOCATION [illegible]
SAMPLE TYPE [illegible]
SAMPLE NUMBERS [illegible]
SAMPLING METHOD [illegible]
SAMPLED BY [illegible] DATE SAMPLED 9-25-78
CONTAINER TYPE [illegible] SAMPLE VOLUME
SAMPLE MATRIX

LOG REMARKS

ANALYTICAL DATA

DATE REPORT DUE

SAMPLE NO.	PARAMETERS	ANALYTICAL METHOD	VALUES	DATE OF ANALYSIS	REMARKS
270	As	parr acid digestion bomb → flame A.A.	54.5%	12-4-78	

SAMPLE INFORMATION

FOR LABORATORY OPERATIONS

DATE RECEIVED 9-29-78 LAB NO. 269

SAMPLING DATA

GEOGRAPHICAL ORIGIN Tacoma Wash.

SAMPLING LOCATION Asarco Slag

SAMPLE TYPE process

SAMPLE NUMBERS [illegible]

SAMPLING METHOD [illegible]

SAMPLED BY [illegible] DATE SAMPLED [illegible] 25-78

CONTAINER TYPE [illegible] SAMPLE VOLUME

SAMPLE MATRIX

LOG REMARKS

ANALYTICAL DATA

DATE REPORT DUE

SAMPLE NO.	PARAMETERS	ANALYTICAL METHOD	VALUES	DATE OF ANALYSIS	REMARKS
-1	As	parr acid	0.33%	12-3-78	slag pot #1 9-19
-2	As	digestion	0.38%	12-3-78	slag pot #2 quench 9-20
-3	As	bomb	0.40%	12-3-78	slag pot #1 dump 9-20
-4	As	→ H A	0.52%	12-3-78	slag pot #2 dump 9-21
-5	As	(Flame)	0.49%	12-3-78	slag pot #3 9-21
-6	As		0.39%	12-3-78	slag pot #3 dump 9-22
-7	As		0.4[illegible]%	12-3-78	slag pot #4 dump 9-22
-8	As		0.49%	12-3-78	slag pot #4 9-22
-9	As		[illegible]	12-3-78	slag pot #5 quench 9-22
-10	As		[illegible]	12-3-78	slag pot #5 dump 9-22

SAMPLE INFORMATION

FOR LABORATORY OPERATIONS

DATE RECEIVED 9-22-78 LAB NO. 258

SAMPLING DATA

GEOGRAPHICAL ORIGIN Tacoma Wash.

SAMPLING LOCATION [illegible]

SAMPLE TYPE [illegible]

SAMPLE NUMBERS N/A

SAMPLING METHOD [illegible]

SAMPLED BY [illegible] DATE SAMPLED [illegible]

CONTAINER TYPE [illegible] SAMPLE VOLUME

SAMPLE MATRIX

LOG REMARKS -1 ⇒ 9-19 ; -2 ⇒ 9-20 ; -3 ⇒ 9-21

ANALYTICAL DATA

DATE REPORT DUE

SAMPLE NO.	PARAMETERS	ANALYTICAL METHOD	VALUES	DATE OF ANALYSIS	REMARKS
-1	As	nitric acid digestion hot → Flame AA	0.26%	12-3-78	
-2	As		0.22%	12-3-78	
-3	As		0.29%	12-3-78	

4. METER BOX CALIBRATION DATA SHEETS

DATE 10-26-78

BOX # RAC 2010

BAROMETRIC PRESSURE P_b 30.19 in. Hg

DRY GASMETER # _____

Orifice Manometer Settling H (in. H_2O)	Gas Volume Wet Test Meter V_w (ft^3)	Gas Volume Dry Gas Meter V_d (ft^3)	Temperature: Wet Test Meter T_w (°F)	Temperature: Dry Gas Meter: Inlet Td (°F)	Temperature: Dry Gas Meter: Outlet T_{do} (°F)	Temperature: Dry Gas Meter: Average T_d (°F)	Time θ (min.)	Y	ΔH@
0.5	4.001	[illegible] 237.185	72	82	76	[illegible]	10	[illegible]	[illegible]
~~1.0~~ .5	4.250	237.185 [illegible]	72	86	80	[illegible]	10	[illegible]	1.515
~~2.0~~ 1.0	5.447	241.636 247.110	72	92	84	[illegible]	10	[illegible]	[illegible]
~~4.0~~ 1.0	5.455	247.110 252.623	72	98	88	[illegible]	10	[illegible]	[illegible]
~~6.0~~ 2.0	3.958	253.673 257.474	72	100	90	[illegible]	5	1.070	1.720
~~8.0~~ [illegible]	3.961	257.474 261.279	72	100	92		5	[illegible]	[illegible]
							Average	1.053	1.714

Calculations

ΔH	$\frac{\Delta H}{13.6}$	Y: $\frac{V_w P_b (T_d + 460)}{V_d (P_b + \frac{H}{13.6} (T_w + 460}$	ΔH@: $\frac{0.0317 \Delta H}{P_b (T_d + 460)}$	ΔH@: $\left[\frac{(T_w + 460)\theta}{V_w}\right]^2$
0.5	0.0368			
1.0	0.0737			
2.0	0.147			
4.0	0.294			
6.0	0.431			
8.0	0.588			

DATE 10-25-78

BOX # RAC 2188

BAROMETRIC PRESSURE P_b 30.02 in. Hg

DRY GASMETER # _____

Orifice Manometer Setting H in. H_2O)	Gas Volume Wet Test Meter V_w (ft^3)	Gas Volume Dry Gas Meter V_d (ft^3)	Temperature: Wet Test Meter T_w (°F)	Temperature: Dry Gas Meter Inlet Td (°F)	Temperature: Dry Gas Meter Outlet T_{do} (°F)	Temperature: Dry Gas Meter Average T_d (°F)	Time θ (min.)	Y	ΔH@
0.5	4.395	431.200 435.158	73	80	72	76	10	1.115	1.440
~~1.0~~ .5	4.476	435.158 439.235	73	90	78	84	10	1.119	1.376
~~2.0~~ 1.0	5.642	439.860 445.378	73	98	84	91	10	1.054	1.710
~~4.0~~ 1.0	5.680	445.378 451.018	73	102	88	95	10	1.046	1.675
~~6.0~~ 2.0	3.887	451.756 455.588	73	96	88	92	5	1.051	1.788
~~8.0~~ 2.0	3.858	455.588 459.395	73	100	88	94	5	1.048	1.819
							Average	1.078	1.634

Calculations

ΔH	$\frac{\Delta H}{13.6}$	Y: $\frac{V_w P_b (T_d + 460)}{V_d (P_b + \frac{H}{13.6} (T_w + 460}$	ΔH@: $\frac{0.0317 \Delta H}{P_b (T_d + 460)}$	ΔH@: $\left[\frac{(T_w + 460)\theta}{V_w}\right]^2$
0.5	0.0368			
1.0	0.0737			
2.0	0.147			
4.0	0.294			
6.0	0.431			
8.0	0.588			

EAST COAST

DATE 10-25-78 BOX # PAC S1213

BAROMETRIC PRESSURE P_b 30.02 in. Hg DRY GASMETER # _____

Orifice Manometer Settling H (in. H_2O)	Gas Volume Wet Test Meter V_w (ft^3)	Gas Volume Dry Gas Meter V_d (ft^3)	Temperature: Wet Test Meter T_w (°F)	Temperature: Dry Gas Meter Inlet Td (°F)	Temperature: Dry Gas Meter Outlet T_{do} (°F)	Temperature: Dry Gas Meter Average T_d (°F)	Time θ (min.)	Y 1.0	ΔH@ 1.96
0.5	4.492	801.163 805.983	73	82	74	78	10	.939	1.38
~~1.0~~ .5	4.268	805.983 809.846	73	90	80	85	10	1.12	1.51
~~2.0~~ 1.0	5.926	809.846 815.324	73	94	82	88	10	1.10	1.55
~~4.0~~ 1.0	5.853	815.324 820.775	73	100	86	93	10	1.11	1.58
~~6.0~~ 2.0	4.422	820.778 826.685	73	104	86	95	5	.772	1.38
~~8.0~~ 2.0	4.418	826.685 830.375	73	106	86	96	5	1.242	1.38
							Average	1.047	1.46

Calculations

ΔH	$\frac{\Delta H}{13.6}$	Y: $\frac{V_w P_b (T_d + 460)}{V_d (P_b + \frac{H}{13.6} (T_w + 460}$	ΔH@: $\frac{0.0317 \Delta H}{P_b (T_d + 460)}$	ΔH@: $\left[\frac{(T_w + 460)\theta}{V_w}\right]^2$
0.5	0.0368			
1.0	0.0737			
2.0	0.147			
4.0	0.294			
6.0	0.431			
8.0	0.588			

EAST COAST

ATE 10-24-78 BOX # RAC 2331

AROMETRIC PRESSURE P_b 29.98 in. Hg DRY GASMETER # _____

Orifice Manometer Settling H in. H_2O)	Gas Volume Wet Test Meter V_w (ft^3)	Gas Volume Dry Gas Meter V_d (ft^3)	Temperature: Wet Test Meter T_w (°F)	Temperature: Dry Gas Meter Inlet Td (°F)	Temperature: Dry Gas Meter Outlet T_{do} (°F)	Temperature: Dry Gas Meter Average T_d (°F)	Time θ (min.)	Y	ΔH@
0.5	4.417	305.626 309.746	72	78	70	74	10	1.074	1.43
~~1.0~~ .5	4.390	309.746 313.087	72	90	76	83	10	1.05	1.42
~~2.0~~ 1.0	5.979	316.514 322.359	72	104	86	95	10	1.065	1.508
~~4.0~~ 1.5	5.969	322.359 328.250	72	108	90	99	10	1.062	1.50
~~6.0~~ 2.0	4.111	328.655 332.681	72	110	94	102	5	1.073	1.576
~~8.0~~ 2.5	4.049	332.681 336.666	72	112	96	104	5	1.072	1.618
						Average		1.066	1.508

Calculations

ΔH	$\frac{\Delta H}{13.6}$	Y: $\frac{V_w P_b (T_d + 460)}{V_d (P_b + \frac{H}{13.6} (T_w + 460)}$	ΔH@: $\frac{0.0317 \Delta H}{P_b (T_d + 460)}$	ΔH@: $\left[\frac{(T_w + 460)\theta}{V_w}\right]^2$
0.5	0.0368			
1.0	0.0737			
2.0	0.147			
4.0	0.294			
6.0	0.431			
8.0	0.588			

FAST COAST

DATE 10-24-78 BOX # RAC S1213

BAROMETRIC PRESSURE P_b 29.98 in. Hg DRY GASMETER # _____

Orifice Manometer Settling H (in. H_2O)	Gas Volume Wet Test Meter V_w (ft^3)	Gas Volume Dry Gas Meter V_d (ft^3)	Temperature: Wet Test Meter T_w (°F)	Temperature: Dry Gas Meter Inlet Td (°F)	Temperature: Dry Gas Meter Outlet T_{do} (°F)	Temperature: Dry Gas Meter Average T_d (°F)	Time θ (min.)	Y	ΔH@
0.5	6.318	764.549 770.349	72	86	78	82	10	1.108	.691
~~1.0~~ .5	6.290	770.549 776.178	72	100	82	91	10	1.116	.681
~~2.0~~ 1.0	7.334	776.861 783.737	72	106	84	95	10	1.110	1.002
~~4.0~~ 1.0	7.323	783.737 790.630	72	112	86	99	10	1.113	.998
~~6.0~~ 2.0	4.595	791.655 796.985	72	116	86	101	5	.904	1.26
~~8.0~~ 2.0	4.572	796.985 800.298	72	116	86	101	5	1.448	1.275
							Average	1.133	.985

Wrong

Calculations

ΔH	$\frac{\Delta H}{13.6}$	Y: $\frac{V_w P_b (T_d + 460)}{V_d (P_b + \frac{H}{13.6} (T_w + 460}$	ΔH@: $\frac{0.0317 \Delta H}{P_b (T_d + 460)} \left[\frac{(T_w + 460)\theta}{V_w}\right]^2$
0.5	0.0368		
1.0	0.0737		
2.0	0.147		
4.0	0.294		
6.0	0.431		
8.0	0.588		

ATE 10-23-78 BOX # 2363 RHC

AROMETRIC PRESSURE P_b 29.95 in. Hg DRY GASMETER # _____

Orifice Manometer Settling H in. H_2O)	Gas Volume Wet Test Meter V_w (ft^3)	Gas Volume Dry Gas Meter V_d (ft^3)	Temperature: Wet Test Meter T_w (°F)	Temperature: Dry Gas Meter Inlet Td (°F)	Temperature: Dry Gas Meter Outlet T_{do} (°F)	Temperature: Dry Gas Meter Average T_d (°F)	Time θ (min.)	Y	ΔH@
0.5	4.354	610.386 614.556	71	100	84	92	10	1.084	1.42
~~1.0~~ .5	4.340	614.556 618.738	71	106	86	96	10	1.085	1.42
~~2.0~~ 1.0	5.772	618.738 624.465	71	112	94	103	10	1.065	1.59
~~4.0~~ 1.0	5.785	624.465 630.233	71	106	90	98	10	1.051	1.59
~~6.0~~ 2.0	3.778	630.712 634.683	71	110	92	101	5	1.00	1.86
~~8.0~~ 2.0	3.781	634.683 638.669	71	106	92	99	5	.99	1.86
							Average	1.045	1.62

Calculations

ΔH	$\frac{\Delta H}{13.6}$	Y: $\frac{V_w P_b (T_d + 460)}{V_d (P_b + \frac{H}{13.6} (T_w + 460}$	ΔH@: $\frac{0.0317 \Delta H}{P_b (T_d + 460)}$	ΔH@: $\left[\frac{(T_w + 460)\theta}{V_w}\right]^2$
0.5	0.0368			
1.0	0.0737			
2.0	0.147			
4.0	0.294			
6.0	0.431			
8.0	0.588			

TE 7-31-78

BOX # RAC 2331

ROMETRIC PRESSURE P_b 29.95 in. Hg

DRY GASMETER # _____

Orifice anometer ettling H in. H_2O)	Gas Volume Wet Test Meter V_w (ft^3)	Gas Volume Dry Gas Meter V_d (ft^3)	Temperature: Wet Test Meter T_w (°F)	Temperature: Dry Gas Meter: Inlet Td (°F)	Temperature: Dry Gas Meter: Outlet T_{do} (°F)	Temperature: Dry Gas Meter: Average T_d (°F)	Time θ (min.)	Y	ΔHθ
0.5	4.301	463.561 467.902	75	100	90		10		
~~1.0~~ .5	4.277	467.902 472.246	75	104	92		10		
~~2.0~~ 1.0	5.830	472.798 478.689	75	110	94		10		
~~4.0~~ 1.0	STOP 11:35 5.775 RESUME 1:10	478.689 484.609	74	88	80		10		
~~6.0~~ 2.0	3.900	485.568 489.532	74	100	84		5		
~~8.0~~ 2.0	3.897	489.532 493.504	74	100	86		5		
						Average			

Calculations

ΔH	$\frac{\Delta H}{13.6}$	Y: $\frac{V_w P_b (T_d + 460)}{V_d (P_b + \frac{H}{13.6} (T_w + 460}$	ΔHθ: $\frac{0.0317 \Delta H}{P_b (T_d + 460)} \left[\frac{(T_w + 460)\theta}{V_w}\right]^2$
0.5	0.0368		
1.0	0.0737		
2.0	0.147		
4.0	0.294		
6.0	0.431		
8.0	0.588		

T 7-20-78

BOX # R4C 2331

POMETRIC PRESSURE P_b 29.96 in. Hg

DRY GASMETER # _____

Orifice anometer setting H (in. H_2O)	Gas Volume Wet Test Meter V_w (ft^3)	Gas Volume Dry Gas Meter V_d (ft^3)	Temperature: Wet Test Meter T_w (°F)	Temperature: Dry Gas Meter Inlet Td (°F)	Temperature: Dry Gas Meter Outlet T_{do} (°F)	Temperature: Dry Gas Meter Average T_d (°F)	Time θ (min.)	Y	ΔHθ
0.5	4.387	415.525 / 419.771	73	84	76	80	10	1.054	1.446
~~1.0~~ .5	4.362	419.756 / 424.962	73	92	80	86	10	0.854	1.447
~~2.0~~ 1.0	5.892	424.675 / 430.512	73	102	86	94	10	1.038	1.863
~~4.0~~ 1.0	5.895	430.562 / 436.499	73	106	90	98	10	1.037	1.550
~~6.0~~ 2.0	4.993	[illegible] / 443.300	23	85	24	25.5	5	1.296	1.117
~~3.0~~ 2.0	4.359	[illegible] / 447.500	23	91	26	25.5	5	1.091	1.617
							Average	1.06	1.457

Calculations

ΔH	$\frac{\Delta H}{13.6}$	Y: $\frac{V_w P_b (T_d + 460)}{V_d (P_b + \frac{H}{13.6} (T_w + 460)}$	ΔHθ: $\frac{0.0317 \Delta H}{P_b (T_d + 460)}$	ΔHθ: $\left[\frac{(T_w + 460)\theta}{V_w}\right]^2$
0.5	0.0368			
1.0	0.0737			
2.0	0.147			
4.0	0.294			
6.0	0.431			
8.0	0.588			

DATE 7-19-78

BOX # RAC 2010

BAROMETRIC PRESSURE P_b 29.99 in. Hg

DRY GASMETER # _____

Orifice Manometer Settling H (in. H_2O)	Gas Volume Wet Test Meter V_w (ft^3)	Gas Volume Dry Gas Meter V_d (ft^3)	Temperature: Wet Test Meter T_w (°F)	Temperature: Dry Gas Meter Inlet Td (°F)	Temperature: Dry Gas Meter Outlet T_{do} (°F)	Temperature: Dry Gas Meter Average T_d (°F)	Time θ (min.)	Y	Δ H@
0.5	3.993	748.615 752.475	74	86	80	82	10	1.057	1.741
~~1.0~~ .05	3.996	752.475 756.363	74	90	84	87	10	1.052	1.726
~~2.0~~ 1.0	5.460	757.475 762.925	74	94	88	91	10	1.031	1.625
~~4.0~~ 1.0	5.714	762.925 768.652	74	94	90	92	10	1.039	1.672
~~6.0~~ 2.0	3.746	767.987 772.155	74	94	90	92	5	1.026	1.946
~~8.0~~ 2.0	3.530	[illegible] 776	74	96	90	92	5	[illegible]	2.157
						Average		1.004	1.851

Calculations

ΔH	$\frac{\Delta H}{13.6}$	Y: $\frac{V_w P_b (T_d + 460)}{V_d (P_b + \frac{H}{13.6} (T_w + 460)}$	ΔH@: $\frac{0.0317 \Delta H}{P_b (T_d + 460)}$	ΔH@: $\left[\frac{(T_w + 460)\theta}{V_w}\right]^2$
0.5	0.0368			
1.0	0.0737			
2.0	0.147			
4.0	0.294			
6.0	0.431			
8.0	0.588			

7-19-78

BOX # 1213 PAC

ATMOSPHERIC PRESSURE P_b 29.99 in. Hg

DRY GASMETER # _____

Orifice Manometer Setting H (in. H_2O)	Gas Volume Wet Test Meter V_w (ft^3)	Gas Volume Dry Gas Meter V_d (ft^3)	Temperature: Wet Test Meter T_w (°F)	Temperature: Dry Gas Meter Inlet Td (°F)	Temperature: Dry Gas Meter Outlet T_{do} (°F)	Temperature: Dry Gas Meter Average T_d (°F)	Time θ (min.)	Y	ΔHθ
0.5	4.449	676.815 680.732	73	84	78	81	10	1.151	1.422
~~1.0~~ .5	4.470	680.732 684.692	73	90	82	[illegible]	10	1.155	1.376
~~2.0~~ 1.0	5.793	685.119 690.566	73	94	84	89	10	1.193	1.630
~~4.0~~ 1.0	5.780	690.566 696.017	73	100	86	93	10	1.192	1.625
~~6.0~~ 2.0	4.373	696.379 700.044	73	104	86	95	5	1.226	1.415
~~8.0~~ 2.0	4.377	700.044 703.719	73	110	86	98	5	1.241	1.474
						Average		1.162	1.475

Calculations

ΔH	$\frac{\Delta H}{13.6}$	Y: $\frac{V_w P_b (T_d + 460)}{V_d (P_b + \frac{H}{13.6} (T_w + 460}$	ΔHθ: $\frac{0.0317 \Delta H}{P_b (T_d + 460)}$	ΔHθ: $\left[\frac{(T_w + 460)\theta}{V_w}\right]^2$
0.5	0.0368			
1.0	0.0737			
2.0	0.147			
4.0	0.294			
6.0	0.431			
8.0	0.588			

APPENDIX B

Sample Calculations

Nomenclature

P_b	Barometric Pressure, mm. Hg.
P_m	Average Orifice Pressure Drop, mm. H_2O
T_m	Average Dry Gas Meter Temperature, °C
V_m	Volume of Dry Gas Sampled at Meter Conditions, Am^3
$V_{m_{std}}$	Volume of Dry Gas Sampled at Standard Conditions(1), Nm^3
V_w	Total H_2O Collected in Impingers and Silica Gel, ml
$V_{w_{std}}$	Volume of Water Vapor Collected at Standard Conditions(1), Nm^3
%M	Percent Moisture in Stack Gas, by Volume
M_d	Mole Fraction Dry Stack Gas
$\%CO_2$	Percent CO_2 by volume, dry
$\%O_2$	Percent O_2 by volume, dry
%CO	Percent CO by volume, dry
$\%N_2$	Percent N_2 by volume, dry
MW_d	Molecular Weight of Dry Stack Gas, gm/gm-mole
MW	Molecular Weight of Wet Stack Gas, gm/gm-mole
MW_c	Molecular Weight of Chemical
C_p	Pitot Tube Coefficient
P_s	Stack Gas Pressure, mm. Hg., absolute
PPM	Parts per million
T_s	Stack Gas Temperature, °C
$\bar{T}_s$	Average Stack Gas Temperature, °C
ΔP_s	Velocity head, mm. H_2O
V_s	Average Stack Gas Velocity, Stack Conditions, Am/s
A_s	Stack Area, m^2
Q_s	Stack Gas Flow Rate at Standard Conditions(1), dry Nm^3/min.

Q_a Stack gas flow rate at stack conditions, Am^3/min.

T_t Net ime of test, min.

D_n Sampling nozzle diameter, mm.

%I Percent isokinetic

m_f Particulate collected in probe, cyclone and filter, mg.

m_t Total particulate collected, mg.

I_c Percent of particulate caught in impingers

C_{sf} Particulate concentrations at standard conditions[1], dry, based on probe, cyclone and filter catch, mg/Nm^3

C_{st} Particulate concentration at standard conditions[1], dry, based on total catch, mg/Nm^3

C_{af} Particulate concentration at stack conditions, based on probe, cyclone and filter catch, mg/Am^3

C_{at} Particulate concentration at stack conditions, based on total catch, mg/Am^3

E_f Particulate emission rate, based on probe, cyclone and filter catch, kg/hr.

E_t Particulate emission rate; based on total particulate catch, kg/hr.

P_u Unit process rate, _____

_____

PE_f Particulate emission rate on a process basis, probe, cyclone and filter catch, kg/_____

PE_t Particulate emission rate on a process basis, total catch kg/_____

%EA Percent excess air in stack gas

Calculations

1. Volume of dry gas sampled at standard conditions[1]

$$V_{m_{std}} = \frac{0.3855 \times V_m \times (P_b + \frac{P_m}{13.6})}{(T_m + 273)} = N_m^3$$

2. Volume of water vapor at standard conditions[1]

$$V_{w_{gas}} + 0.0013 \times V_w = Nm^3$$

3. Percent moisture in stack gas by volume

$$\%M = \frac{100 \times V_{w_{gas}}}{V_{w_{gas}} + V_{m_{std}}} = \%$$

4. Mole fraction dry stack gas

$$M_s = \frac{100 - \%M}{100} = \%$$

5. Molecular weight of dry stack gas

$$MW_d = (\%CO \times \frac{44}{100}) + (\%O_2 \times \frac{32}{100}) + [\%CO + \%N_2 \times \frac{28}{100}]$$

$$= gm/gm\text{-}mole$$

Calculations

1. Volume of dry gas sampled at standard conditions[1]

$$V_{m_{std}} = \frac{0.3855 \times V_m \times (P_b + \frac{P_m}{13.6})}{(T_m + 273)} = N_m^3$$

2. Volume of water vapor at standard conditions[1]

$$V_{w_{gas}} + 0.0013 \times V_w = Nm^3$$

3. Percent moisture in stack gas by volume

$$\%M = \frac{100 \times V_{w_{gas}}}{V_{w_{gas}} + V_{m_{std}}} = \%$$

4. Mole fraction dry stack gas

$$M_s = \frac{100 - \%M}{100} = \%$$

5. Molecular weight of dry stack gas

$$MW_d = (\%CO \times \frac{44}{100}) + (\%O_2 \times \frac{32}{100}) + [\%CO + \%N_2 \times \frac{28}{100}]$$

$$= gm/gm\text{-}mole$$

6. Molecular weight of wet stack gas

$$MW = MW_d \times M_d + 18(1-M_d) = \text{gm/gm-mole}$$

7. Stack gas velocity at stack conditions[2]

$$V_s = 34.97 \times C_p \times \sqrt{\Delta P_s \times (T_s + 273)} \; \frac{1}{P_s \times MW}^{\frac{1}{2}} = \text{Am/sec.}$$

8. Stack gas volumetric flow rate at standard conditions [1], dry

$$Q_s = \frac{2.325 \times V_s \times A_s \times M_d \times P_s}{} = \text{Nm}^3\text{/min.}$$

9. Stack gas volumetric flow rate at stack conditions

$$Q_a = \frac{2.59 \times Q_s \; (\bar{T}_s + 273)}{P_s \times M_d} = \text{Am}^3\text{/min.}$$

10. Percent isokinetic

$$\%I = \frac{54{,}120 \times (\bar{T}_s + 273) \times V_{m_{std}}}{V_s \times T_t \times P_s \times M_d \times (D_n)^2} = \%$$

11. Particulate concentration at standard conditions[1], dry, based on probe, cyclone and filter catch

$$C_{sf} = \frac{m_f}{V_{m_{std}}} = \text{mg/Nm}^3$$

12. Particulate concentration at standard conditions [1], dry, based on total catch

$$C_{st} = \frac{m_t}{V_{m_{std}}} = mg/Nm^3$$

13. Particulate concentration at stack conditions, based on probe, cyclone, and filter catch

$$C_{af} = \frac{0.3855 \times C_{sf} \times P_s \times M_d}{} = mg/Am^3$$

14. Particulate concentration at stack conditions, based on total catch

$$C_{at} = \frac{0.3855 \times C_{sf} \times P_s \times M_d}{\bar{T}_s + 273)} = mg/Am^3$$

15. Particulate emission rate, based on probe, cyclone, and filter catch

$$E_f = 1{,}000{,}000 \times C_{sf} \times Q_s = kg/hr.$$

16. Particulate emission rate, based on total catch

$$E_t = 1{,}000{,}000 \times C_{st} \times Q_s = kg/hr.$$

17. Particulate emission rate on a process basis, probe, cyclone, and filter catch

$$PF_f = \frac{E_f}{P_u}$$

18. Particulate emission rate on a process basis, total catch

$$PE_t = \frac{E_t}{P_u}$$

19. Particulate emission rate, part per million

$$PPM = \frac{M_t}{V_{m_{std(NM^3)}}} \times \frac{22,0226}{MW_{(c)}}$$

---

(1) Standard conditions: 20 C, 760 mm. Hg.

(2) $\sqrt{\Delta P_s \times (T_s + 273)}$ is determined by averaging the square root of the product of the velocity head (ΔP_s) and the absolute stack temperature (T_s + 273) at each sampling point.

APPENDIX C

Daily Activity Log

September 11, 1978
Flew to Tacoma, arrived at Seatact at 9:30 @ Tacoma at 10:30.

September 12, 1978
Met with Frank Clay and Al Viervart at 8 a.m. - met with Plant Officials at 9 a.m. took tour of plant to see sampling locations, scaffolding, ports - everything looked fine - set up the equipment for the outlet from the ESP and put some equipment at outlet from the Roaster Baghouse.

We can't sample while the plant is on curtailed production - They say it may be on full production tomorrow or Thursday. Got back to motel at 8:30 p.m.

September 13, 1978
Continued to set up at Roaster Baghouse inlet and outlet. The rest of the crew arrived at 2 p.m. but the equipment was lost by United Airline transit. Hours 8 a.m. - 5 p.m.

September 14, 1978
Arrived at plant at 8 a.m. showed crew around the various locations, assigned personnel to the locations and had them complete set up.

Met with meteorologist who said that the plant would go on full production at 8 p.m. Left the plant at 11 a.m. and came back at 6:30 p.m. prepared to test at 8 p.m. Charles Counts told us that the meteorological condition had deteriorated and we could not test until 11:30 p.m. - we decided to return at 6 a.m.

September 15, 1978
Two tests in and out of Roaster Baghouse - One test at outlet from the reverb ESP. Arrived 6:00 a.m. left 8 p.m. - 13 hrs.

September 16, 1978
One test at Roaster Baghouse (1 inlet, 1 outlet) and one test at the Reverb ESP outlet - came to work at 1 p.m. and worked until 9 p.m.

September 17, 1978
Day Off

September 18, 1978
Arrived at plant at 8 a.m. moved equipment from Roaster baghouse inlet and outlet to slag tapping and matte tapping position. Set up converter slag return location from spare equipment - found out that the plant would be on curtail production until 5:30 p.m. due to weather.

Sent most of crew home at 5 p.m.

Bob Jongleux, D. Powell and Al Rosario stayed until 10:00 p.m. to run one test at Reverb ESP outlet - hours Dave, Roberto, Rick, Dan, Sharon, Tom - 8 hrs. Del, Al, Bob - 14 hrs.

September 19, 1978
Ran one test at each of matte tapping and slag tapping locations. Started test at the converter slag return (this test will be continued until the other 3 locations are done because of short run time). Set up at calcine duct and tried

to run one test but found a clip loose at the end of the test. 5 p.m. - 4 a.m.

September 20, 1978
Ran one test at slag tapping, matte tapping and calcine duct. Hours 1 p.m. - 10 p.m.

September 21, 1978
Ran final test at matte tapping and slag tapping - ran 2 test at calcine duct- hours 7 a.m. - 9 p.m.

September 22, 1978
Moved equipment from matte tapping, slag tapping, converter slag return - I returned from 4 to 8 p.m. to run a final test at the calcine - did not set up at the arsenic kitchen baghouse because Charlie Counts said they were having some problems with the shaker mechanism. Hours - crew 6 hrs - Del 10 hrs.

September 23, 1978
Move equipment to arsenic kitchen baghouse positions, did velocity traverses, set up equipment, and leak tested systems in readiness for testing tomorrow. Heavy rain in the morning, drizzle in the afternoon. Hours 8 a.m. - 5:30 p.m.

September 24, 1978
Ran 2 sets of three simultaneous test at the arsenic kitchen. Baghouse will recover the second set of samples tomorrow morning. Hours - 9 a.m. to 7 p.m. 9 hrs.

September 25, 1978
Completed final test at arsenic kitchen baghouse - packed up van and left the plant. Hours at plant 9 a.m. - 6:30 p.m. Travel hours - 4 hrs.