Note: This is a reference cited in *AP 42, Compilation of Air Pollutant Emission Factors, Volume I Stationary Point and Area Sources.* AP42 is located on the EPA web site at www.epa.gov/ttn/chief/ap42/

The file name refers to the reference number, the AP42 chapter and section. The file name "ref02_c01s02.pdf" would mean the reference is from AP42 chapter 1 section 2. The reference may be from a previous version of the section and no longer cited. The primary source should always be checked.

#14 , # 13

EPA-600/2-76-036c
February 1976

Environmental Protection Technology Series

AP-42
5th ed.
Section 12.3
#14

PRIMARY COPPER SMELTING
AP-42 Section 7.3
Reference Number 13

DESIGN AND OPERATING PARAMETERS FOR EMISSION CONTROL STUDIES: Kennecott, McGill, Copper Smelter

Industrial Environmental Research Laboratory
Office of Research and Development
U.S. Environmental Protection Agency
Research Triangle Park, North Carolina 27711

EPA-600/2-76-036c
February 1976

DESIGN AND OPERATING PARAMETERS FOR EMISSION CONTROL STUDIES: KENNECOTT, McGILL, COPPER SMELTER

by

I. J. Weisenberg and J. C. Serne

Pacific Environmental Services, Inc.
1930 14th Street
Santa Monica, California 90404

Contract No. 68-02-1405, Task 5
ROAP No. 21ADC-061
Program Element No. 1AB013

EPA Project Officer: R. D. Rovang

Industrial Environmental Research Laboratory
Office of Energy, Minerals, and Industry
Research Triangle Park, NC 27711

Prepared for

U.S. ENVIRONMENTAL PROTECTION AGENCY
Office of Research and Development
Washington, DC 20460

TABLE OF CONTENTS

SECTION		PAGE
A.	INTRODUCTION AND SUMMARY	1
B.	PLANT LOCATION, ACCESS AND OVERALL GENERAL ARRANGEMENT	2
C.	PROCESS DESCRIPTION	2
D.	EMITTING EQUIPMENT	7
	a. Reverberatory Furnaces	7
	b. Converters	7
	c. Other Emitting Equipment	11
E.	EXISTING CONTROL EQUIPMENT	11
F.	NEW ACID PLANT	13
G.	GAS SYSTEM DUCTWORK	16
H.	SULFUR BALANCE AND GAS COMPOSITION AT SYSTEM EXIT	16
I.	GAS CHARACTERISTIC VARIATION	23
J.	STACK DESCRIPTION	25
K.	SOLID WASTE HANDLING	25
L.	FOOTING AND CONSTRUCTION REQUIREMENTS	25
M.	EXISTING AND POTENTIALLY AVAILABLE UTILITIES	26
N.	POTENTIAL NEW CONTROL EQUIPMENT INSTALLATION PROBLEMS	28

LIST OF TABLES

TABLE		PAGE
1.	PARTICULATE EMISSIONS ANALYSIS AT STACK OUTLET	19
2.	SULFUR BALANCE	24

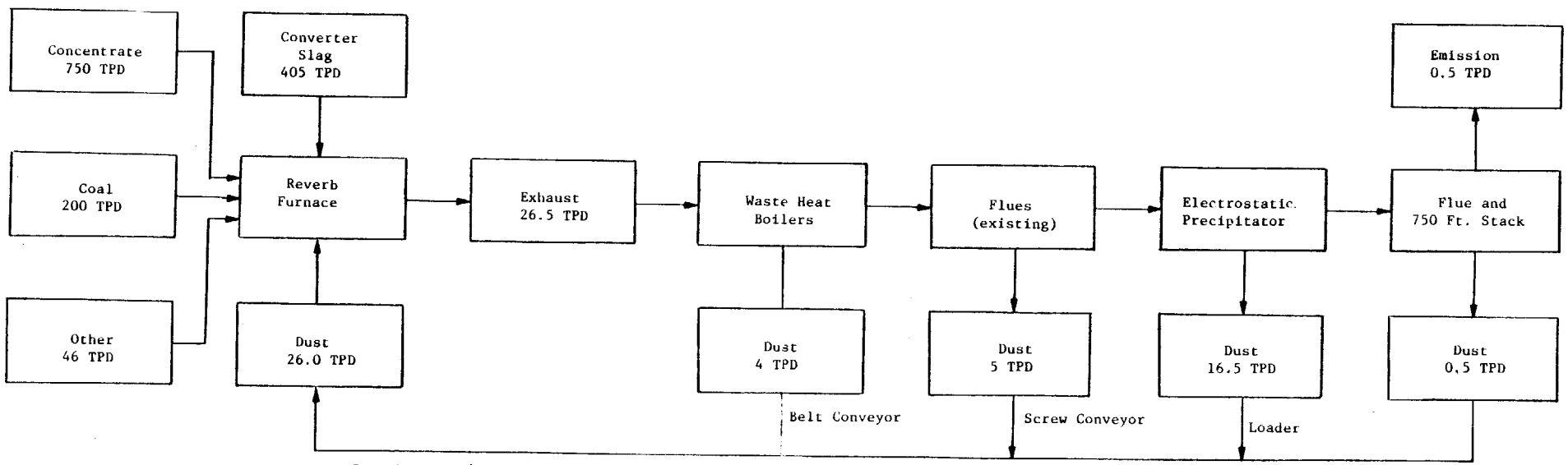

Reverb Furnace Input	TPD
Other:	
Lime Rock	45
Flux	1
Coal	200
Dust	26
Concentrate	750
Converter Slag	405
Total	1,427
Average	59.2 tons/hr
Allowable Particulate Emission	46.2 lb/hr

Projected Particulate Emission	TPD	
Reverb Exhaust		26.5
Collection:		
Waste Heat Boilers	4	
Flue	5	
Precipitator (New)	16.5	
Flue Extension & Base of Stack	0.5	
Subtotal		26.5
Projected Emission		0.5 = 42 lb/hr
Contingency		3
Particulate Emission		45 lb/hr

Figure 10. REVERBERATORY FURNACE PARTICULATE BALANCE
750 TPD (one reverberatory furnace)

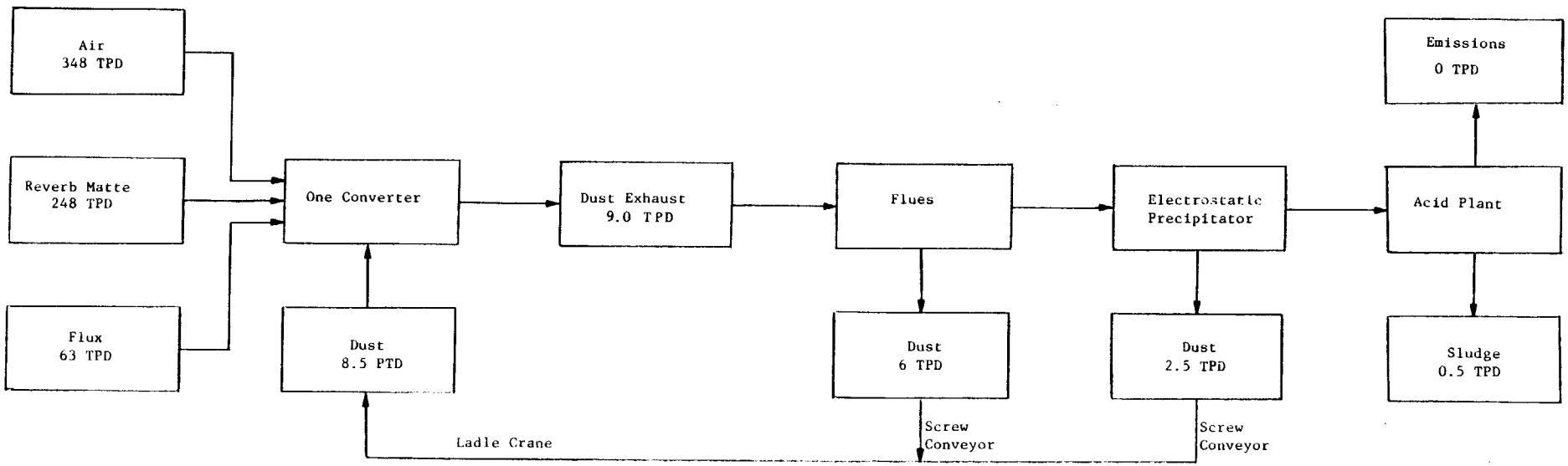

Converter Input

	TPD
Flux	63
Air*	
Dust	8.5
Reverb Matte	248
Total	319.5
Average	13.3 tons/hr
Allowable Particulate Emission:	
(One converter)	23.2 lb/hr
(Two converters)	46.4 lb/hr

*Process air excluded by definition

Projected Particulate Emission

		TPD	
Converter Exhaust		9.0	
Collection:			
Flues	6		
Electrostatic Precipitator	2.5		
Acid Plant Sludge	0.5		
Subtotal		9.0	
Projected Emission		0	= 0 lb/hr
Contingency			5
Particulate Emission:			—
(One converter)			5 lb/hr
(Two converters)			10 lb/hr

Figure 11. COPPER CONVERTERS PARTICULATE BALANCE 750 TPD (two converters)