ECOLOGY AUDITS, INC.

9935 Monroe Dr · Dallas, Texas 75220
(214) 350-7893
Subsidiary of Core Laboratories, Inc

PRIMARY COPPER SMELTING
AP-42 Section ~~7.3~~ 12.3
Reference Number
~~7~~ 8

Note: This is a reference cited in *AP 42, Compilation of Air Pollutant Emission Factors, Volume I Stationary Point and Area Sources.* AP42 is located on the EPA web site at www.epa.gov/ttn/chief/ap42/

The file name refers to the reference number, the AP42 chapter and section. The file name "ref02_c01s02.pdf" would mean the reference is from AP42 chapter 1 section 2. The reference may be from a previous version of the section and no longer cited. The primary source should always be checked.

AP-42
5th ed.
Section 12.3
#8

SOURCE EMISSIONS SURVEY
OF
KENNECOTT COPPER CORP.
COPPER SMELTER
CONVERTER STACK INLET AND OUTLET
AND
REVERBERATORY ELECTROSTATIC PRECIPITATOR
INLET AND OUTLET
HURLEY, NEW MEXICO
APRIL, 1973

FILE NUMBER EA 735-09

TABLE OF CONTENTS

	PAGE NO.
INTRODUCTION	1
SUMMARY OF RESULTS	2
DISCUSSION OF RESULTS	11
DESCRIPTION OF PROCESS OPERATION	16
DESCRIPTION OF SAMPLING LOCATION	17
SAMPLING AND ANALYTICAL PROCEDURES	18
DESCRIPTION OF TESTS	21
APPENDICES	24

A. Location of Sampling Points

B. Particulate Emissions Calculations

C. Sulfur Dioxide Calculations

D. Nitrogen Oxides Calculations

E. Sulfur Trioxide Calculations

F. Equipment Calibration

SOURCE EMISSIONS SURVEY
KENNECOTT COPPER CORP.
COPPER SMELTER
HURLEY, NEW MEXICO

FILE NUMBER EA 735-09

INTRODUCTION

Ecology Audits, Inc., Dallas, Texas, conducted source emissions surveys at Kennecott Copper Corp., Hurley, New Mexico on April 5-10, 1973. The units tested were the converter stack and pollution control device inlet and the reverberatory stack and electrostatic precipitator inlet. The purpose of this survey was to simultaneously determine the concentrations of particulates in the control device inlets and exhaust stacks of the converter and the reverberatory operations. Also, determination of the emissions of sulfur dioxide and nitrogen oxides from both exhaust stacks was an objective.

The sampling followed the procedures set forth in the Appendix to the Code of Federal Regulations, Title 40, Chapter 1, Part 60.

ECOLOGY AUDITS, INC.
9995 Monroe Dr · Dallas, Texas 75220

SUMMARY OF RESULTS

The principal conclusions are as follows:

1. The emissions of particulate matter from the converter stack are 473 pounds per hour, based on averaging three tests. 5.68 TPD

2. The average particulate loading for the inlet to the converter pollution control device is 679 pounds per hour, based on two tests. 8.148 TPD

3. Converter control device efficiencies for the two simultaneous tests were calculated as 35 percent and 11 percent respectively.

4. The emissions of particulate matter from the reverberatory stack are 1,560 pounds per hour based on averaging four tests. 18.72 TPD

5. The average particulate loading for the inlet to the reverberatory electrostatic precipitator is 2,130 pounds per hour, based on averaging tests 2, 3 and 4. 25.6 TPD

6. Precipitator efficiency for the three tests was calculated as 22 percent, -1.4 percent and 66 percent, respectively.

ECOLOGY AUDITS, INC.
9995 Monroe Dr. · Dallas, Texas 75220

7. The average emissions of sulfur compounds from the converter stack are equal to 918,908 pounds per day (410 long tons* per day) -- 916,070 pounds per day of sulfur dioxide and 2,838 pounds per day of sulfur trioxide (409 and 1 long tons per day, respectively). These results are based on averaging four tests.

460 TPD 460 (436) 458 TPD 1.4 TPD

8. The average emissions of sulfur compounds from the reverberatory stack are equal to 493,000 pounds per day (220 long tons per day) -- 484,000 pounds per hour of sulfur dioxide and 8,990 pounds per day of sulfur trioxide (216 and 4 long tons per day, respectively). These results are based on averaging three tests.

246.5 TPD 250 242 TPD 4.5 TPD

9. Concentrations of nitrogen oxides in the converter stack were found to be an average of 1.96 ppm, based on values from the three runs which yielded average values as follows:

	Run #1	Run #2	Run #3
average concentration	1.55 ppm	0.79 ppm	3.56 ppm
range	0.0 to 3.08	0.0 to 3.19	1.55 to 4.86

* one long ton = 2240 pounds

ECOLOGY AUDITS, INC.
9995 Monroe Dr. · Dallas, Texas 75220

10. The three tests on the reverberatory stack for nitrogen oxides yielded an overall average of 3.38 ppm. The individual runs yielded average values as follows:

	Run #1	Run #2	Run #3
average concentration	4.45 ppm	2.5 ppm	3.19 ppm
range	1.75 to 7.68	0.0 to 5.0	0.0 to 9.45

ECOLOGY AUDITS, INC.
9995 Monroe Dr. · Dallas, Texas 75220

SUMMARY OF RESULTS

KENNECOTT COPPER CORP.

CONVERTER STACK

A16

Run Number	1	2	3
Date	4-5-73	4-5-73	4-5-73
Stack Flow Rate - SCFM*	153415	211909	212739
% Water Vapor - % Vol.	0.56	0.84	1.84
% CO_2 - % Vol.	0.0	0.0	1.0
% O_2 - % Vol.	20.2	20.1	18.3
% Excess Air @ Sampling Point	2133	1872	593
Particulates Probe, Cyclone & Filter Catch grains/SCF*	0.3466	0.3265	0.2038
grains/CF @ Stack Conditions	0.1821	0.1682	0.1117
lbs./hr.	455.7	592.9	371.6
Total Catch grains/SCF*	-	-	-
grains/CF @ Stack Conditions	-	-	-
lbs./hr.	-	-	-
SO_2 in Particulate impinger	963,257	1,126,429	966,188
lbs/day			
lbs/hr	40,100		

192688

*29.92" Hg., 70°F

EA 735-09

SUMMARY OF RESULTS

KENNECOTT COPPER CORP.

CONVERTER INLET

Run Number	1	2	AVG
Date	4-5-73	4-5-73	
Stack Flow Rate - SCFM*	126655	135064	130860
% Water Vapor - % Vol.	2.57	2.04	
% CO_2 - % Vol.	0.0	0.0	
% O_2 - % Vol.	19.4	20.0	
% Excess Air @ Sampling Point	990	1667	
Particulates Probe, Cyclone & Filter Catch grains/SCF*	0.6415	0.5725	
grains/CF @ Stack Conditions	0.3588	0.3287	
lbs./hr.	696.3	662.7	
Total Catch grains/SCF*	-	-	
grains/CF @ Stack Conditions	-	-	
lbs./hr.	-	-	
Same	519.571	341.317	

*29.92" Hg., 70°F

ECOLOGY AUDITS, INC.
9395 Monroe Dr. · Dallas, Texas 75220

SUMMARY OF RESULTS

KENNECOTT COPPER CORP.

CONVERTER SO_2

AVG

Run Number		1	2	3	4	
Orsat Analysis (% of Dry Gas)	CO_2	0.0	0.0	1.0	1.0	
	O_2	18.3	18.3	17.0	19.2	
	N_2, SO_2	81.7	81.7	82.0	79.8	
Moisture % of Total Stack Gases		1.16	-0.32	2.34	-2.26	
Average Stack Velocity ft/sec at stack conditions		6.97	5.7	8.5	7.7	
Average Stack Temp. °F		280	227	392	344	
% Excess Air		546	546	359	986	
Total Gas Volume in Stack:						
SCFM*		207988	186233	217850	219041	20778
SCF*/day x 10^6		299.4	268.2	313.7	315.4	
Dry Molecular Weight of Stack Gases		28.73	28.73	28.59	28.93	
Sulfur Emissions:						
SO_2 (ppm) of dry stack gas		12143.3	1980.2	40467.3	21493.3	
Long tons of S per day as SO_2 218.3		134.3	19.6	468.9 525.2 ST	250.4	218.3

244 ST S/D

2.24/2 (218.3 = 244.5 ST. TPD

490

* 29.92" Hg., 70°F

649233 94837 2266611 1210533

1055514

SUMMARY OF RESULTS

KENNECOTT COPPER CORP.

REVERBERATORY STACK

Run Number	1	2 (4/9 9-11)	3 (4/9 1-3 pm)	4 (4/10 10am-1130am)
Date	4-8-73	4-9-73	4-9-73	4-10-73
Stack Flow Rate - SCFM* 248930	237731	241956	257819	258213
% Water Vapor - % Vol.	5.3	6.03	4.73	2.87
% CO_2 - % Vol.	2.4	2.4	2.4	1.5
% O_2 - % Vol.	17.0	16.8	17.0	17.7
% Excess Air @ Sampling Point	390	364	390	476.8
Particulates				
Probe, Cyclone & Filter Catch grains/SCF*	0.8329	0.5870	1.1536	0.3489
grains/CF @ Stack Conditions	0.4163	0.3 0.2885	0.6 0.5796	0. 0.1834
lbs./hr.	1697.0	1217.3	2548.9	772.1
Total Catch				66% eff
grains/SCF*	-	-	-	-
grains/CF @ Stack Conditions	-	-	-	-
lbs./hr.	-	-	-	-
same	537,651	571,508	564,551	265110

*29.92" Hg., 70°F

ECOLOGY AUDITS, INC.
9995 Monroe Dr · Dallas, Texas 75220

SUMMARY OF RESULTS

KENNECOTT COPPER CORP.

REVERBERATORY INLET 4/9 9/2 | 4/9 1pm-5pm | 4/10 935-1135

Run Number	2	3	4
Date	4-9-73	4-9-73	4-10-73
Stack Flow Rate - SCFM* 176510	186720	172393	170417
% Water Vapor - % Vol.	5.51	7.02	3.96
% CO_2 - % Vol.	2.0	2.0	2.4
% O_2 - % Vol.	17.2	17.2	17.4
% Excess Air @ Sampling Point	408	408	452
Particulates Probe, Cyclone & Filter Catch grains/SCF*	0.9749	1.7016	1.5711
grains/CF @ Stack Conditions	0.4278	0.7318	0.7335
lbs./hr.	1567.6	2514.0	2294.6
Total Catch grains/SCF*	-	-	-
grains/CF @ Stack Conditions	-	-	-
lbs./hr.	-	-	-
same	380,799	489 727	194 744

*29.92" Hg., 70°F

ECOLOGY AUDITS, INC.
9995 Monroe Dr · Dallas, Texas 75220

SUMMARY OF RESULTS

KENNECOTT COPPER CORP.

REVERBERATORY SO_2

Run Number		1	2	3
Orsat Analysis (% of Dry Gas)	CO_2	2.4	2.4	2.4
	O_2	17.0	17.0	17.0
	N_2, SO_2	80.6	80.6	80.6
Moisture % of Total Stack Gases		4.59	6.47	4.87
Average Stack Velocity ft/sec at stack conditions		15.2	15.0	15.4
Average Stack Temp. °F		367	367	360
% Excess Air		390	390	390
Total Gas Volume in Stack:				
SCFM* 247120		247388	240480	253480
SCF*/day x 10^6		356.2	346.3	365.0
Dry Molecular Weight of Stack Gases		29.06	29.06	29.06
Sulfur Emissions:				
SO_2 (ppm) of dry stack gas		7449.6	8737.4	8460.1
Long tons of S per day as SO_2 108		98.0	111.8	114.0
S#7 TONS $\frac{2.24}{2} \times 108 = 121$ TPD				

* 29.92" Hg., 70°F

DISCUSSION OF RESULTS

Converter

The simultaneous tests for particulates and test for sulfur dioxide on the converter appear to be valid representations of actual concentrations. There are differences in both the measured flow rates and moisture content, but there are good explanations.

The most reliable flow rate information was available on the stack. The Dwyer "Microtector" manometer was used and all sampling points were accessible. Sampling of the inlet was more restricted. The port locations did not permit a full spectrum sample. Instead the sampling was conducted only from the center ports on either side. These were determined to be the most representative sampling points based on the preliminary velocity traverse.

Control device collection efficiencies may be estimated to be about 50 percent based on applying the measured stack flow rate information to inlet particulate calculations -- in effect, applying an increased volume of air and an increased particulate loading.

ECOLOGY AUDITS, INC.
9995 Monroe Dr · Dallas, Texas

The measured moisture in the inlet was higher than on the stack. This can be partially explained by leaks in the system which would dilute stack gases and increase the volumetric flow rate.

Sulfur dioxide concentrations were measured two ways: first in separate runs and second, while making particulate runs. Both sets of data are in relatively close agreement. The average concentration of sulfur dioxide in the four sulfur dioxide runs is 19,000 ppm (1.90 percent) and in the three particulate runs is 22,600 ppm (2.26 percent). Sulfur dioxide collections on the inlets were designed to protect the pumps and equipment, and were not intended to yield quantitative data.

On the separate sulfur dioxide runs the ratio of collections in the first and second hydrogen peroxide impinger was analyzed to insure that a valid sample was taken. Valid collections are assumed in most cases if the second impinger contains less than 10 percent of the total sulfur dioxide. A similar check was made of the impingers in the particulate runs.

Analysis of the converter operations data and expressing the results in terms of converter equivalents per run showed no direct correlation to the results of either particulate or sulfur dioxide tests.

ECOLOGY AUDITS, INC.
9995 Monroe Dr. · Dallas, Texas 75220

Reverberatory

The simultaneous particulate tests and the tests for sulfur dioxide showed less variation than the converter tests.

The variation in measured inlet flow rates between runs was less than one percent.

Measured moisture content of gas between inlet and stack showed some differences. The silica gel method for moisture determination has limited accuracy for gas streams of low moisture content. In addition, the measured flow rate in the stack was greater than the inlet, suggesting some leakage. This helps explain the lower moisture content in the stack gas as well as the somewhat larger measured volumetric flow rate.

Collection efficiency as recorded for run #3 is -1.4 percent, implying that the weight of particulates entering the precipitator was slightly less than that in the stack. It is logical to assume that the precipitator did not contribute particulate, but that due to turbulence at the sampling location the velocity measurement at the inlet was probably in error by a small percentage.

ECOLOGY AUDITS, INC.
9995 Monroe Dr. Dallas, Texas 75220

If the stack flow rate is applied to the particulate concentration at the inlet, the collection efficiency is positive. The limit of accuracy of the sampling method is in the range of 2 percent.

Sulfur dioxide concentrations were determined both in separate sulfur dioxide runs and while sampling for particulates. Both sets of data are in close agreement.

Sulfur dioxide concentrations averaged 8,215 ppm (0.82%) on the sulfur dioxide runs and 8,312 ppm (0.83%) on the particulate runs. Collection efficiencies between impingers of the sulfur dioxide runs were good. The second impinger had between 1.9 and 4.0 percent of the total collection.

ECOLOGY AUDITS, INC.
9995 Monroe Dr. · Dallas, Texas 75220

General

Errors up to one percent may have been made in calculating molecular weights and excess air. This error arises from including sulfur dioxide with nitrogen as total "nitrogen" in the Orsat analysis data.

Nitrogen oxides were generally very low, averaging about 5 ppm. The relatively wide variations among flasks and runs appear to be due more to the limitations of the testing method. The method is generally designed to measure concentrations of 100 to 1,000 ppm.

ECOLOGY AUDITS, INC.
9995 Monroe Dr. · Dallas, Texas 75220

DESCRIPTION OF PROCESS OPERATION

New concentrated ore is introduced into the smelter through the reverberatory furnace where it is heated to approximately 2400°F. As the metal is melted, fluxing material (SiO_2) is added and oxides are burned off. Products of this stage are slag (which is discarded) and matte, which is 40 to 50 percent copper. The matte is conveyed to the four converters where it is reheated and more fluxing material added to carry off slag. A mixture of air and oxygen is blown through the molten matte to burn off more impurities. The copper from this stage of the process is divided, some being cast into ingots and the remainder passes on to the refinery where it is reheated and blown with propane gas to obtain a finished product with a purity of 99.9 percent copper.

ECOLOGY AUDITS, INC.
9995 Monroe Dr. · Dallas, Texas 75220

DESCRIPTION OF SAMPLING LOCATION

The sampling of the converter stack was done from 180° ports, A and C, 259 feet (7.8 stack diameters) downstream of a disturbance and 312 feet (9.4 stack diameters) upstream of the stack outlet. The converter pollution control device inlet was sampled from the center port on each side of the sloping underside of the duct. The ports are approximately 15 feet downstream of a disturbance and 40 feet upstream of the collection device.

The reverberatory stack was sampled from 180° ports, B and D, 239 feet (9.1 stack diameters) downstream from a disturbance and 222 feet (8.4 stack diameters) upstream from the outlet of the stack. Sampling of the electrostatic precipitator inlet was done from eight vertical ports, four on top of each duct leading into the precipitator. The ports were located on the sloping top of the precipitator, approximately 3 feet downstream of the inlet constriction.

ECOLOGY AUDITS, INC.
9995 Monroe Dr. · Dallas, Texas 75220

SAMPLING AND ANALYTICAL PROCEDURES

The sampling and analytical procedures used in this survey followed the procedures outlined in the "Appendix to the Code of Federal Regulations, Title 40, Chapter 1, Part 60."

Preliminary velocity traverses and moisture determinations were made at each sampling location in order to determine the magnitude and uniformity of flow. On all particulate samples the train was leak-checked at 15 inches of mercury before the test, and leak-checked after the test at the highest vacuum reading recorded during the test. Sulfur dioxide samples were preceded by a leak-check at 10 inches of mercury. Post-test leak-checks were also performed on SO_2 samples to verify that a representative, undiluted sample had been collected. Barometric pressure readings for each test were obtained from plant personnel at the industrial hygiene office.

Particulate samples of 8-minute duration were taken at each of the 12 points on the A-C traverse in the converter stack. The EPA-type, heated, glass-lined probe was extended in order to reach the last sampling point by the addition of 3 feet of

1/2 inch diameter stainless steel tubing. The converter inlet was sampled from two lower-side ports for 10 minutes per point at 5-points on a normal traverse from each port. A flexible, heated Teflon probe extension, 25 feet long, was used in order to obtain the inlet samples.

Sulfur dioxide was sampled for 10 minutes at each of 3 points on a port A traverse of the converter stack. Oxides of nitrogen samples were also collected at port A. Three runs of four flasks per run were collected using an EPA Method 7 apparatus. The train was modified by employing a length of heated Teflon tubing to extend the probe to the flask.

The reverberatory stack was sampled for particulates on a B-D traverse for 10 minutes at each of 10 points. The outermost points of a usual 12-point sampling traverse were eliminated since a zero velocity was detected there. The stainless steel probe extension was unnecessary in this test. Samples from the reverberatory electrostatic precipitator inlet were taken from a traverse of four points from each of the eight vertical ports. Sampling time at each point was 3 minutes. The heated Teflon probe extension was again used to obtain the inlet samples.

ECOLOGY AUDITS, INC.
9995 Monroe Dr. · Dallas, Texas 75220

Samples of sulfur dioxide from the reverberatory stack were collected at port D, using a 5-point traverse with a sampling time of 5 minutes at each point. The EPA train, with the heated glass-lined probe, was used in obtaining all sulfur dioxide samples, and the samples were taken proportionally to stack velocity rather than isokinetically. A probe tip nozzle was not used.

Nitrogen oxides were sampled from reverberatory port A, collecting three runs of four flasks per run.

As according to instructions from Environmental Improvement Agency, State of New Mexico personnel, it was necessary to analyze only the "front half" collections of the EPA-type sampling train for particulates.

ECOLOGY AUDITS, INC.
9995 Monroe Dr. · Dallas, Texas 75220

DESCRIPTION OF TESTS

Personnel from Ecology Audits arrived at the plant at 8:00 a.m. on Monday, April 2, 1973. After a conference with plant safety personnel, preliminary set-up and preparation procedures began. Sampling equipment was set up on the converter stack and on the inlet to the pollution control device.

On Tuesday morning, preliminary data was gathered and preparations for sampling completed. A shutdown in converter operations in conjunction with a failure of the converter elevator halted further progress toward sampling. Glassware for the tests was hoisted up the stack by hand-pulley since no winch or tugger was available at the time.

Particulate sampling began on Wednesday morning. A broken cyclone during the first run halted the inlet test, and the stack sample was lost due to a clogged filter. The first test was considered invalid and discarded. Equipment difficulties delayed further progress. Three runs for nitrogen oxides samples were taken on the converter stack.

After a delay caused by equipment difficulties, testing resumed on Thursday morning, and three simultaneous particulate runs were made on the converter stack and on the inlet. The last inlet sample was lost, however, since the sampling team evacuated the test site due to prohibitive concentrations of fugitive sulfur dioxide around the sampling location.

On Friday, three runs were completed on the reverberatory stack for nitrogen oxides, and a sulfur dioxide sample was collected on the converter stack. The test for sulfur dioxide appears to be valid, although clogged pitot lines made the proportionality of the sample somewhat questionable. Sampling equipment was moved off the converter inlet and taken to the area of the reverberatory stack.

Three sulfur dioxide runs were made on the converter stack Saturday morning, and equipment was moved on the reverberatory precipitator inlet. In the afternoon, set-up was completed on the reverberatory stack and preliminary data was gathered.

A simultaneous particulate run was taken from the reverberatory stack on Sunday, however, the inlet sample was lost due to a clogged filter. Preparations were made for sampling on the following day.

ECOLOGY AUDITS, INC.
9995 Monroe Dr. · Dallas, Texas 75220

On Monday, two valid, simultaneous particulate runs were made on the reverberatory stack and inlet. Three sulfur dioxide runs were also collected on the stack on Monday.

On Tuesday, a final particulate run was taken from the reverberatory stack and precipitator inlet. Equipment was moved off the sampling locations and loaded into the mobile laboratory.

All samples were recovered and returned to Ecology Audits' laboratory in Dallas for analysis and evaluation. Operations at Kennecott Copper Corp. were completed at 2:00 p.m. on April 10, 1973.

Richard H. Schulze, P.E.
President

Billy J. Mullins, Jr., P.E.
Manager, Technical Services

APPENDICES

A. Location of Sampling Points

B. Particulate Emissions Calculations

C. Sulfur Dioxide Calculations

D. Nitrogen Oxides Calculations

E. Sulfur Trioxide Calculations

F. Equipment Calibration

ECOLOGY AUDITS, INC.
9995 Monroe Dr. · Dallas Texas 75220

APPENDIX A

Location of Sampling Points

Converter Stack

The sampling ports are located 259.3 feet downstream from any flow disturbance and 312 feet upstream of the stack outlet. The locations of the sampling points were calculated as follows:

Inside Stack Diameter = 33' 1"

Point No.	Percent of Diameter From Wall	Distance From Inside Wall
1	2.1	8 3/8"
2	6.7	26 5/8"
3	11.8	46 7/8"
4	17.7	70 1/4"
5	25.0	99 1/4"
6*	35.5	140 15/16"

* Half of a 12-point, 180° traverse

ECOLOGY AUDITS, INC.
9995 Monroe Dr. · Dallas, Texas 75220

LOCATION OF SAMPLING POINTS
CONVERTER CONTROL DEVICE INLET DUCT

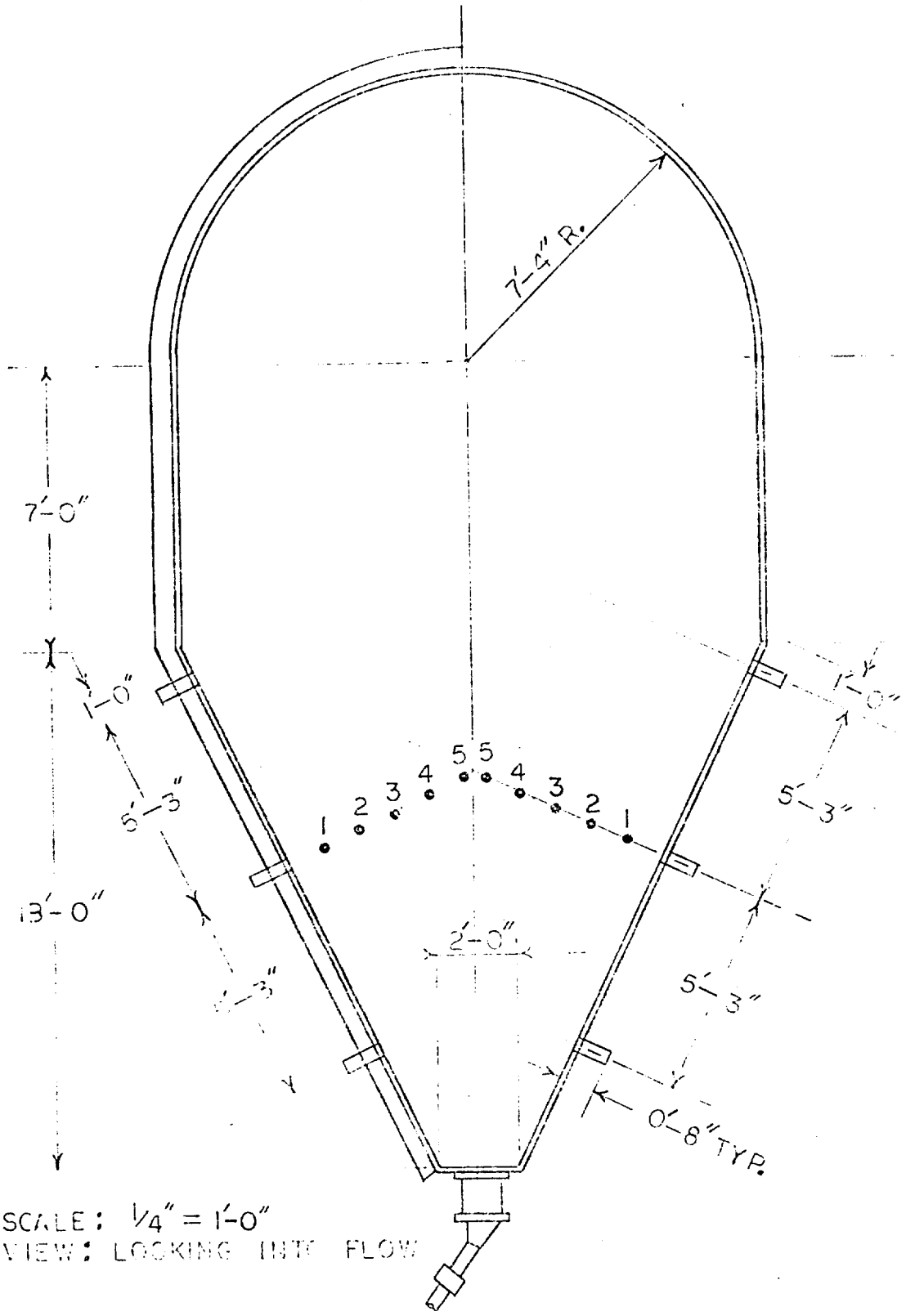

SCALE: 1/4" = 1'-0"
VIEW: LOOKING INTO FLOW

ECOLOGY AUDITS, INC.
9995 Monroe Dr. · Dallas, Texas 75220

PRELIMINARY VELOCITY DATA
(ΔP)

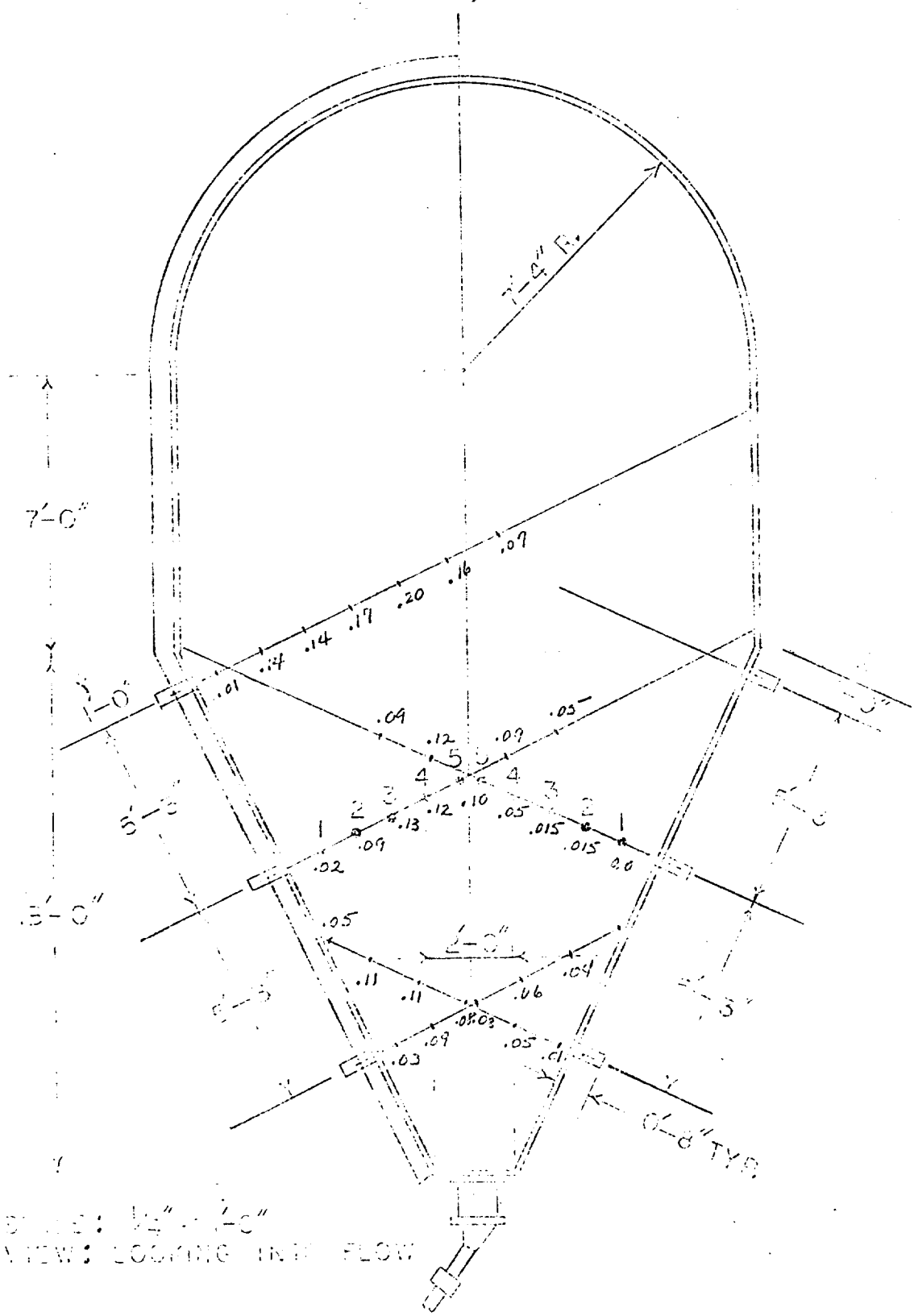

SCALE: 1/4" = 1'-0"
VIEW: LOOKING INTO FLOW

APPENDIX A

Location of Sampling Points

Reverberatory Stack

The sampling ports are located 239.5 feet downstream from any flow disturbance and 222 feet upstream from the outlet of the stack. The locations of the sampling points were calculated as follows:

Inside Stack Diameter = 26' 4"

Point No.	Percent of Diameter From Wall	Distance From Inside Wall
1	2.1	6 5/8"
2	6.7	21 3/16"
3	11.8	37 5/16"
4	17.7	55 15/16"
5	25.0	79"
6*	35.5	112 3/16"

* Half of a 12-point, 180° traverse

EA 735-09

LOCATION OF SAMPLING POINTS

REVERBERATORY ELECTROSTATIC PRECIPITATOR INLET DUCTS

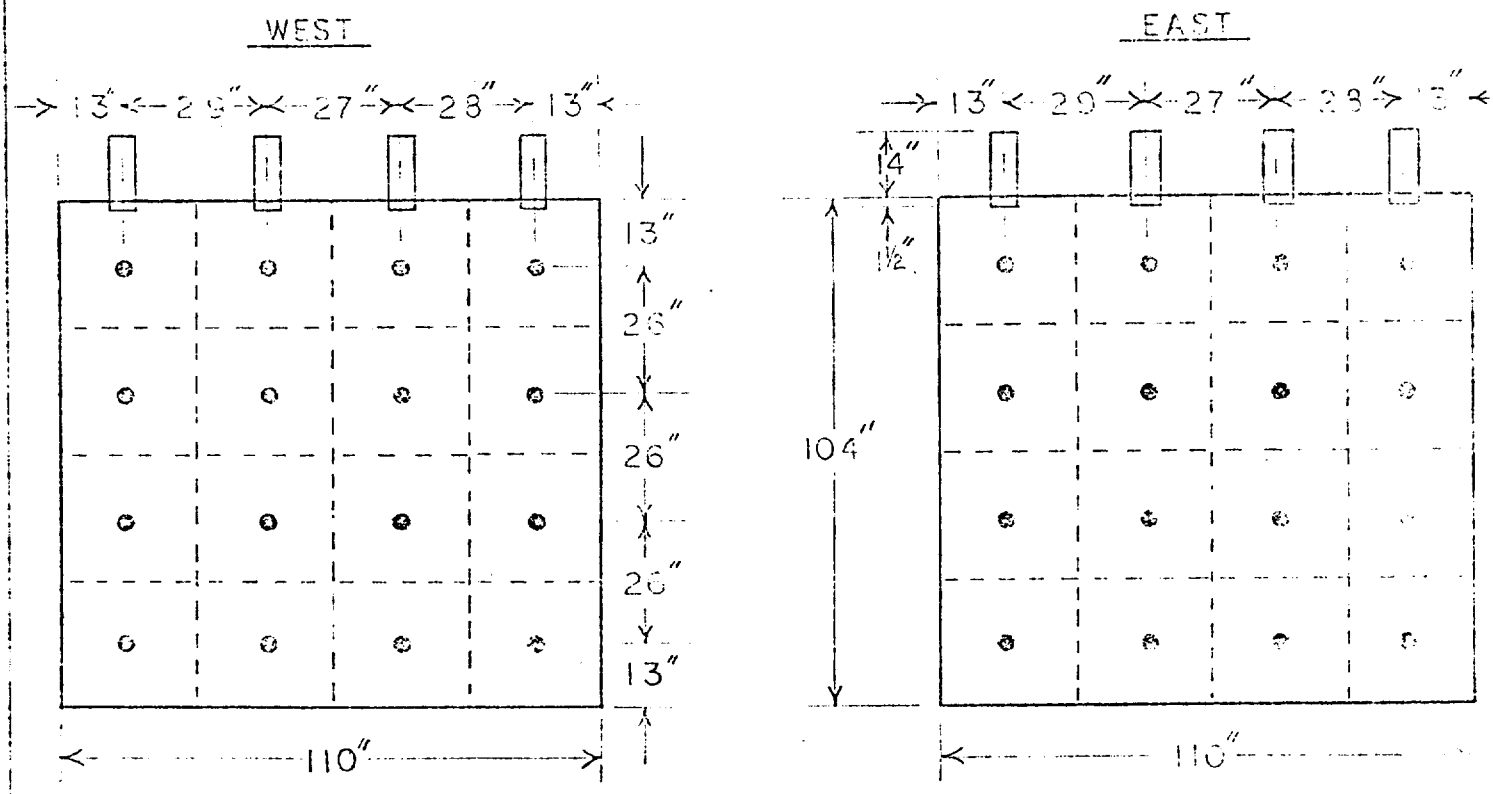

VIEW: LOOKING INTO FLOW
SCALE: 1/4" = 10"

Appendix B

Nomenclature and Equations

for

Calculation of Particulate Emissions

Nomenclature for Particulate Calculations

Symbol	Unit	Description
A_s	in.^{2}	Stack Area
C_{an}	gr/SCF	Particulate - probe, cyclone and filter
C_{ao}	gr/SCF	Particulate - total
C_{at}	gr/CF @ stack conditions	Particulate - probe, cyclone and filter
C_{au}	gr/CF @ stack conditions	Particulate - total
C_{aw}	lbs/hr.	Particulate - probe, cyclone and filter
C_{ax}	lbs/hr.	Particulate - total
C_p		Pitot Tube Calibration Factor
D_n	in.	Sampling Nozzle Diameter
%EA		Percent Excess Air at sampling point
g	32.2 ft/sec^2	Acceleration of gravity
%I		Percent isokinetic
%M		Percent moisture in the stack gas by volume
M_d		Mole fraction of dry gas
m_f	mg.	Particulate - probe, cyclone and filter
M_{H_2O}	18 lb/lb-mole	Molecular Weight of Water

Symbol	Unit	Description
m_t	mg.	Particulate - total
MW	lb/lb-mole	Molecular Weight of stack gas
MW_{air}	28.95 lb/ lb-mole	Molecular Weight of air
MW_d	lb/lb-mole	Molecular Weight of dry stack gas
P_b	"Hg Absolute	Barometric pressure
P_m	"H_2O	Orifice Pressure drop
P_s	"Hg Absolute	Stack Pressure
ΔP_s	"H_2O	Velocity Head of stack gas
P_{std}	29.92"Hg	Standard Barometric Pressure
Q_s	SCFM	Stack Gas Volume @ 29.92 "Hg, 530°R, dry
R	21.83 in. Hg-ft^3/lb-mole-°R	Universal Gas Constant
T_m	°F	Average Gas Meter Temperature
T_t	min.	Net time of test
T_s	°F	Stack Temperature
T_{std}	530° R	Standard Temperature
V_m	$ft.^3$	Volume of dry gas sampled @ meter conditions
$V_{m_{std}}$	$ft.^3$	Volume of dry gas sampled @ standard conditions
V_s	fpm	Stack velocity @ stack conditions
V_w	ml	Total Water Collected in Impingers and Silica Gel

Symbol	Unit	Description
$V_{w_{gas}}$	$ft.^3$	Volume of Water Vapor Collected @ standard conditions
ρ_{air}	$0.0748\ lbs/ft^3$	Density of Air
ρ_{H_2O}	1 g/ml	Density of Water
ρ_{man}	$51.63\ lbs/ft^3$	Density of Manometer Oil

Standard Conditions: 70°F, 29.92 "Hg

Example Particulate Calculations

1. Volume of dry gas in cubic feet sampled at standard conditions.*

$$V_{m_{std}} = V_m \left(\frac{T_{std}}{T_m + 460} \right) \left[\frac{P_b + \frac{P_m}{13.6}}{P_{std}} \right]$$

$$V_{m_{std}} = 17.71\ V_m \left(\frac{P_b + \frac{P_m}{13.6}}{T_m + 460} \right) = \text{ft.}^3$$

2. Volume of water vapor in cubic feet collected at standard conditions.*

$$V_{w_{gas}} = \frac{V_w\ \rho_{H_2O}\ R\ T_{std}}{P_{std}\ M_{H_2O}\ 453.6}$$

$$V_{w_{gas}} = 0.0474\ V_w = \text{ft.}^3$$

3. Percent moisture in stack gas

$$\%M = \frac{V_{w_{gas}}}{V_{m_{std}} + V_{w_{gas}}} \times 100$$

4. Mole fraction of dry gas

$$M_d = \frac{100 - \%M}{100}$$

*530°R, 29.92 in. Hg

5. Average molecular weight of dry stack gas.

$$MW_d = \left(\%CO_2 \times \frac{44}{100}\right) + \left(\%O_2 \times \frac{32}{100}\right) + \left(\%N_2 \times \frac{28}{100}\right) + \left(\%CO \times \frac{28}{100}\right) = \text{lb/lb-mole}$$

6. Molecular weight of stack gas.

$$MW = MW_d \times M_d + 18\,(1-M_d) = \frac{\text{lb}}{\text{lb-mole}}$$

7. Stack Pressure, "Hg Absolute

$$P_s = P_b + \frac{\text{stack pressure } "H_2O}{13.6}$$

8. Stack velocity at stack conditions, fpm

$$V_s = C_p\ 60 \left[\frac{2g \times \rho_{man} \times P_{std} \times MW_{air} \times (T_s + 460) \times \Delta P_s}{12 \times \rho_{air} \times P_s \times MW \times T_{std}}\right]^{1/2}$$

$$V_s = 5128.2\, C_p \left[\frac{(T_s + 460) \times \Delta P_s}{P_s \times MW}\right]^{1/2} = \text{fpm}$$

9. Stack gas volume at standard conditions, SCFM*

$$Q_s = \frac{1}{144} V_s \times A_s \times M_d \times \frac{T_{std}}{T_s + 460} \times \frac{P_s}{P_{std}}$$

$$Q_s = \frac{0.123\, V_s \times A_s \times M_d \times P_s}{T_s + 460} = \text{SCFM}$$

10. Percent isokinetic

$$\%I = \frac{V_{m_{std}} \times (T_s + 460) \times P_{std} \times 100}{M_d \times T_{std} \times P_s \times T_t \times V_s \times \frac{\pi D_n^2}{4}}$$

$$\%I = \frac{1035\, V_{m_{std}} \times (T_s + 460)}{M_d \times P_s \times T_t \times V_s \times D_n^2}$$

*530°R, 29.92 "Hg

11. Particulate - probe, cyclone and filter, grains/SCF.

$$C_{an} = \frac{m_f}{V_{m_{std}}} \times \frac{1 \text{ gr}}{64.8 \text{ mg}}$$

$$C_{an} = 0.0154 \frac{m_f}{V_{m_{std}}} = \text{grains/SCF}$$

12. Particulate total, grains/SCF

$$C_{ao} = 0.0154 \times \frac{m_t}{V_{m_{std}}} = \text{gr/SCF}$$

13. Particulate - probe, cyclone and filter, gr/CF at stack conditions

$$C_{at} = C_{an} \times \frac{P_s}{P_{std}} \times \frac{(T_{std})}{(T_s + 460)} \times M_d$$

$$C_{at} = \frac{17.71 \times C_{an} \times P_s \times M_d}{T_s + 460} = \text{gr/CF}$$

14. Particulate - total, gr/CF at stack conditions

$$C_{au} = \frac{17.71 \times C_{ao} \times P_s \times M_d}{T_s + 460} = \text{gr/CF}$$

15. Particulate - probe, cyclone and filter, lbs/hr.

$$C_{aw} = C_{an} \times Q_s \times \frac{60 \text{ min.}}{1 \text{ hr.}} \times \frac{1 \text{ lb}}{7000 \text{ gr}}$$

$$C_{aw} = 0.00857 \times C_{an} \times Q_s = \text{lbs/hr.}$$

16. Particulate - total, lbs/hr.

$$C_{ax} = 0.00857 \times C_{ao} \times Q_s = \text{lbs/hr.}$$

*530°R, 29.92 "Hg

17. Percent excess air at sampling point.

$$\%EA = \frac{100\ (\%O_2 - 0.5\%\ CO)}{0.265\ (\%N_2) - (\%O_2) + 0.5\ (\%CO)}$$

CONVERTER STACK
COPPER SMELTER
KENNECOTT COPPER CORP.
HURLEY, NEW MEXICO
FILE NUMBER EA 735-09

SOURCE TESTING CALCULATIONS

Particulate Emissions

Symbol	Description	Units			
Run No.			1	2	3
Date			4/5/73	4/5/73	4/5/73
Begin			1200	1715	2230
End			1400	1910	0035
P_b	barometric pressure	Hg Abs.	24.43	24.43	24.43
P_m	orifice pressure drop	H_2O	.390	.632	.631
V_m	volume of dry gas sampled @ meter conditions	$ft.^3$	33.707	49.436	48.635
T_m	avg. gas meter temp.	°F	68	74	46
$V_{m_{std}}$	volume dry gas sampled @ standard conditions*	$ft.^3$	27.67	40.11	41.70
V_w	total H_2O collected, impingers & silica gel	ml.	3.3	7.2	16.5
$V_{w_{gas}}$	volume water vapor collected @ standard conditions*	$ft.^3$	.15	.34	.78
%M	moisture in stack gas by volume	%	.56	.84	1.84

* 70°F, 29.92" Hg.

Converter Stack
EA 735-09

Symbol	Description	Units			
M_d	mol fraction of dry gas	--	.9944	.9910	[illegible]
CO_2		%	0.0	0.0	1.[illegible]
O_2		%	20.2	20.1	18.3
N_2		%	79.8	79.9	80.7
%EA	excess air @ sampling point	%	2133.1	1872.4	[illegible]
MW_d	molecular weight of dry stack gas	--	28.81	28.80	[illegible]
MW	molecular weight of stack gas	--	28.75	28.71	28.69
ΔPs	velocity head of stack gas	In. H_2O	.008	.012	.011
T_s	stack temperature	°F	356	369	312
P_s	stack pressure	Hg. Abs.	24.32	24.33	24.32
V_s	stack velocity @ stack conditions	fpm	339	478	451
A_s	stack area	in.^{2}	123910	123910	123910
Q_s	stack gas volume @ standard conditions*	SCFM	153415	211989	212739
T_t	net time of test	min.	96	96	96
D_n	sampling nozzle diam.	in.	.560	.560	.560
%I	percent isokinetic	%	94.5	99.2	102.7

* 70°F, 29.92" Hg.

Converter Stack
EA 735-09

Symbol	Description	Units			
m_f	particulate - probe, cyclone and filter	mg.	622.8	850.3	551.9
m_t	particulate - total	mg.	622.8	850.8	551.9
C_{an}	particulate - probe, cyclone and filter	gr/SCF*	.3466	.3245	.2038
C_{ao}	particulate - total	gr/SCF*	.3466	.3267	.2038
C_{at}	particulate - probe, cyclone and filter @ stack conditions	gr/cf	.1821	.1682	.1117
C_{au}	particulate total @ stack conditions	gr/cf	.1821	.1683	.1117
C_{aw}	particulate - probe, cyclone and filter	lb./hr.	455.7	592.9	371.6
C_{ax}	particulate - total	lb./hr.	455.7	593.2	371.6

* 70°F, 29.92" Hg.

CONVERTER INLET
COPPER SMELTER
KENNECOTT COPPER CORP.
HURLEY, NEW MEXICO
FILE NUMBER EA 735-09

SOURCE TESTING CALCULATIONS

Particulate Emissions

Symbol	Description	Units		
Run No.			1	2
Date			4/5/73	4/5/73
Begin			1200	1715
End			1403	1850
P_b	barometric pressure	Hg Abs.	24.43	24.43
P_m	orifice pressure drop	H_2O	.338	.338
V_m	volume of dry gas sampled @ meter conditions	$ft.^3$	31.604	31.508
T_m	avg. gas meter temp.	°F	70	62
$V_{m_{std}}$	volume dry gas sampled @ standard conditions*	$ft.^3$	25.83	26.15
V_w	total H_2O collected, impingers & silica gel	ml.	14.4	11.5
$V_{w_{gas}}$	volume water vapor collected @ standard conditions*	$ft.^3$	.68	.55
%M	moisture in stack gas by volume	%	2.57	2.04

* 70°F, 29.92" Hg.

Converter Inlet
EA 735-09

Symbol	Description	Units		
M_d	mol fraction of dry gas	--	.9743	.9796
CO_2		%	0.0	0.0
O_2		%	19.4	20.0
N_2		%	80.6	80.0
%EA	excess air @ sampling point	%	990.3	1666.7
MW_d	molecular weight of dry stack gas	--	28.78	28.80
MW	molecular weight of stack gas	--	28.50	28.58
ΔPs	velocity head of stack gas	In. H_2O	.065	.069
T_s	stack temperature	°F	293	277
P_s	stack pressure	Hg. Abs.	24.41	24.40
V_s	stack velocity @ stack conditions	fpm	976	1014
A_s	stack area	in.^{2}	33425	33425
Q_s	stack gas volume @ standard conditions*	SCFM	126655	135064
T_t	net time of test	min.	100	100
D_n	sampling nozzle diam.	in.	.301	.301
%I	percent isokinetic	%	95.8	90.9

* 70°F, 29.92" Hg.

Converter Inlet
EA 735-09

Symbol	Description	Units		
m_f	particulate - probe, cyclone and filter	mg.	1075.8	972.3
m_t	particulate - total	mg.	1075.8	972.3
C_{an}	particulate - probe, cyclone and filter	gr/SCF*	.6415	.5725
C_{ao}	particulate - total	gr/SCF*	.6415	.5725
C_{at}	particulate - probe, cyclone and filter @ stack conditions	gr/cf	.3588	.3287
C_{au}	particulate total @ stack conditions	gr/cf	.3588	.3287
C_{aw}	particulate - probe, cyclone and filter	lb./hr.	696.3	662.7
C_{ax}	particulate - total	lb./hr.	696.3	662.7

* 70°F, 29.92" Hg.

REVERBERATORY OUTLET
COPPER SMELTER
KENNECOTT COPPER CORP.
HURLEY, NEW MEXICO
FILE NUMBER EA 735-09

SOURCE TESTING CALCULATIONS

Particulate Emissions

Symbol	Description	Units				
Run No.			1	2	3	4
Date			4/8/73	4/9/73	4/9/73	4/10/73
Begin			1735	0900	1300	0945
End			1925	1050	1450	1135
P_b	barometric pressure	Hg Abs.	24.54	24.58	24.58	24.44
P_m	orifice pressure drop	H_2O	.446	.454	.501	.470
V_m	volume of dry gas sampled @ meter conditions	$ft.^3$	40.131	40.544	43.826	41.367
T_m	avg. gas meter temp.	°F	78	85	93	85
$V_{m_{std}}$	volume dry gas sampled @ standard conditions*	$ft.^3$	32.48	32.40	34.57	32.86
V_w	total H_2O collected, impingers & silica gel	ml.	38.3	43.8	36.2	20.5
$V_{w_{gas}}$	volume water vapor collected @ standard conditions*	$ft.^3$	1.82	2.08	1.72	.97
%M	moisture in stack gas by volume	%	5.30	6.03	4.73	2.87

* 70°F, 29.92" Hg.

Reverberatory Outlet
EA 735-09

Symbol	Description	Units				
M_d	mol fraction of dry gas	--	.9470	.9397	.9527	.9713
CO_2		%	2.4	2.4	2.4	1.5
O_2		%	17.0	16.8	17.0	17.7
N_2		%	80.6	80.8	80.6	80.8
%EA	excess air @ sampling point	%	390.0	364.3	390.0	476.8
MW_d	molecular weight of dry stack gas	--	29.06	29.06	29.06	28.95
MW	molecular weight of stack gas	--	28.48	28.39	28.54	28.63
ΔPs	velocity head of stack gas	In. H_2O	.041	.044	.048	.045
T_s	stack temperature	°F	361	369	363	338
P_s	stack pressure	Hg. Abs.	24.46	24.50	24.50	24.37
V_s	stack velocity @ stack conditions	fpm	875	905	944	904
A_s	stack area	$in.^2$	78288	78288	78288	78288
Q_s	stack gas volume @ standard conditions*	SCFM	237731	241956	257819	258213
T_t	net time of test	min.	100	100	100	100
D_n	sampling nozzle diam.	in.	.364	.364	.364	.364
%I	percent isokinetic	%	102.8	100.7	100.9	95.7

* 70°F, 29.92" Hg.

Reverberatory Outlet
EA 735-09

Symbol	Description	Units				
m_f	particulate - probe, cyclone and filter	mg.	1756.7	1235.0	2589.8	744.5
m_t	particulate - total	mg.	1756.7	1235.0	2589.8	744.5
C_{an}	particulate - probe, cyclone and filter	gr/SCF*	.8329	.5870	1.1536	.3489
C_{ao}	particulate - total	gr/SCF*	.8329	.5870	1.1536	.3489
C_{at}	particulate - probe, cyclone and filter @ stack conditions	gr/cf	.4163	.2885	.5796	.1834
C_{au}	particulate total @ stack conditions	gr/cf	.4163	.2885	.5796	.1834
C_{aw}	particulate - probe, cyclone and filter	lb./hr.	1697.0	1217.3	2548.9	772.1
C_{ax}	particulate - total	lb./hr.	1697.0	1217.3	2548.9	772.1

* 70°F, 29.92" Hg.

REVERBERATORY INLET
COPPER SMELTER
KENNECOTT COPPER CORP.
HURLEY, NEW MEXICO
FILE NUMBER EA 735-09

SOURCE TESTING CALCULATIONS

Particulate Emissions

Symbol	Description	Units			
Run No.			2	3	4
Date			4/9/73	4/9/73	4/10/73
Begin			0900	1302	0935
End			1153	1718	1135
P_b	barometric pressure	Hg Abs.	24.58	24.58	24.58
P_m	orifice pressure drop	H_2O	.567	.516	.523
V_m	volume of dry gas sampled @ meter conditions	$ft.^3$	40.966	37.823	38.875
T_m	avg. gas meter temp.	°F	61	91	74
$V_{m_{std}}$	volume dry gas sampled @ standard conditions*	$ft.^3$	34.29	29.90	31.73
V_w	total H_2O collected, impingers & silica gel	ml.	42.2	47.6	27.6
$V_{w_{gas}}$	volume water vapor collected @ standard conditions*	$ft.^3$	2.00	2.26	1.31
%M	moisture in stack gas by volume	%	5.51	7.02	3.96

* 70°F, 29.92" Hg.

Reverberatory Inlet
EA 735-09

Symbol	Description	Units			
M_d	mol fraction of dry gas	--	.9449	.9298	.9604
CO_2		%	2.0	2.0	2.4
O_2		%	17.2	17.2	17.4
N_2		%	80.8	80.8	80.2
%EA	excess air @ sampling point	%	408.4	408.4	451.6
MW_d	molecular weight of dry stack gas	--	29.01	29.01	29.08
MW	molecular weight of stack gas	--	28.40	28.24	28.64
ΔPs	velocity head of stack gas	In. H_2O	.393	.357	.315
T_s	stack temperature	°F	471	476	430
P_s	stack pressure	Hg. Abs.	24.43	24.46	24.44
V_s	stack velocity @ stack conditions	fpm	2691	2523	2297
A_s	stack area	$in.^2$	22880	22880	22880
Q_s	stack gas volume @ standard conditions*	SCFM	187620	172393	170417
T_t	net time of test	min.	96	96	96
D_n	sampling nozzle diam.	in.	.230	.240	.240
%I	percent isokinetic	%	104.8	91.4	98.1

* 70°F, 29.92" Hg.

Reverberatory Inlet
EA 735-09

Symbol	Description	Units			
m_f	particulate - probe, cyclone and filter	mg.	2171.0	3304.1	3236.7
m_t	particulate - total	mg.	2171.0	3304.1	3236.7
C_{an}	particulate - probe, cyclone and filter	gr/SCF*	.9749	1.7016	1.5711
C_{ao}	particulate - total	gr/SCF*	.9749	1.7016	1.5711
C_{at}	particulate - probe, cyclone and filter @ stack conditions	gr/cf	.4278	.7318	.7335
C_{au}	particulate total @ stack conditions	gr/cf	.4278	.7318	.7335
C_{aw}	particulate - probe, cyclone and filter	lb./hr.	1567.6	2514.0	2294.6
C_{ax}	particulate - total	lb./hr.	1567.6	2514.0	2294.6

* 70°F, 29.92" Hg.

APPENDIX C
CONVERTER STACK
COPPER SMELTER
KENNECOTT COPPER CORP.
HURLEY, NEW MEXICO
FILE NUMBER EA 735-09

SOURCE TESTING CALCULATIONS

SO_2

Symbol	Description	Units				
Run No.			1	2	3	4
Date			4/6/73	4/7/73	4/7/73	4/7/73
Begin			1650	0935	1025	1145
End			1720	1005	1055	1215
P_b	barometric pressure	Hg Abs.	24.56	24.56	24.56	24.56
P_m	orifice pressure drop	H_2O	.330	.226	.360	.363
V_m	volume of dry gas sampled @ meter conditions	$ft.^3$	10.696	8.788	12.085	10.657
T_m	avg. gas meter temp.	°F	80	63	68	76
$V_{m_{std}}$	volume dry gas sampled @ standard conditions*	$ft.^3$	8.63	7.31	9.98	8.65
V_w	total H_2O collected, impingers & silica gel	ml.	2.1	-.5	5.0	2.06
$V_{w_{gas}}$	volume water vapor collected @ standard conditions*	$ft.^3$	.10	-.02	.24	0.0976
%M	moisture in stack gas by volume	%	1.16	-.32	2.34	1.1

* 70°F, 29.92" Hg.

Converter Stack - SO_2
EA 735-09

mbol	Description	Units				
M_d	mol fraction of dry gas	--	.9884	1.0032	.9766	0.989
CO_2		%	0.0	0.0	1.0	1.0
O_2		%	18.3	18.3	17.0	19.2
N_2		%	81.7	81.7	82.0	79.8
%EA	excess air @ sampling point	%	546.2	546.2	359.4	764.2
MW_d	molecular weight of dry stack gas	--	28.73	28.73	28.84	28.93
MW	molecular weight of stack gas	--	28.61	28.77	28.59	28.81
ΔPs	velocity head of stack gas	In. H_2O	.010	.007	.013	.011

REVERBERATORY OUTLET
COPPER SMELTER
KENNECOTT COPPER CORP.
HURLEY, NEW MEXICO
FILE NUMBER EA 735-09

SOURCE TESTING CALCULATIONS

SO_2

Symbol	Description	Units			
Run No.			1	2	3
Date			4/9/73	4/9/73	4/9/73
Begin			1805	1845	1935
End			1830	1910	2000
P_b	barometric pressure	Hg Abs.	24.58	24.58	24.58
P_m	orifice pressure drop	H_2O	.294	.286	.306
V_m	volume of dry gas sampled @ meter conditions	$ft.^3$	8.524	8.264	8.203
T_m	avg. gas meter temp.	°F	91	88	82
$V_{m_{std}}$	volume dry gas sampled @ standard conditions*	$ft.^3$	6.73	6.58	6.59
V_w	total H_2O collected, impingers & silica gel	ml.	6.8	9.6	7.1
$V_{w_{gas}}$	volume water vapor collected @ standard conditions*	$ft.^3$	.32	.45	.34
%M	moisture in stack gas by volume	%	4.59	6.47	4.87

* 70°F, 29.92" Hg.

Reverberatory Outlet - SO_2
EA 735-09

Symbol	Description	Units			
M_d	mol fraction of dry gas	--	.9541	.9353	.9513
CO_2		%	2.4	2.4	2.4
O_2		%	17.0	17.0	17.0
N_2		%	80.6	80.6	80.6
%EA	excess air @ sampling point	%	390.0	390.0	390.0
MW_d	molecular weight of dry stack gas	--	29.06	29.06	29.06
MW	molecular weight of stack gas	--	28.56	28.35	28.53
ΔPs	velocity head of stack gas	In. H_2O	.044	.043	.046
T_s	stack temperature	°F	367	367	360
P_s	stack pressure	Hg. Abs.	24.51	24.51	24.50
V_s	stack velocity @ stack conditions	fpm	909	901	926
A_s	stack area	in.^{2}	78288	78288	78288
Q_s	stack gas volume @ standard conditions*	SCFM	247388	240480	253480
T_t	net time of test	min.	25	25	25
D_n	sampling nozzle diam.	in.	.625	.625	.625
%I	percent isokinetic	%	27.8	27.9	26.6

* 70°F, 29.92" Hg.

Job No. 735-09

Client Kennecott Copper

SO_2 EMISSION DATA

Unit Tested Converter Outlet Particulate

Run No.	1	2	3			
Date	4/5/73	4/5/73	4/5/73			
Time	1200-1400	1715-1910	2230-0035			
$\underline{N}$ - normality of $BaCl_2$	0.1000	0.1000	0.1000			
ML_I - ml in impinger #1	306	320	367			
ML_I - ml in impinger #2	290	332	346			
ML_I - ml in impinger #3	263	274	282			
ML_A - ml in aliquot #1	1.0	1.0	1.0			
ML_A - ml in aliquot #2	1.0	1.0	1.0			
ML_A - ml in aliquot #3	1.0	1.0	1.0			
ML_B - ml of $BaCl_2$ to titrate #1	23.03	30.31	17.60			
ML_B - ml of $BaCl_2$ to titrate #2	24.45	22.13	16.93			
ML_B - ml of $BaCl_2$ to titrate #3	11.17	14.20	22.40			
T_m - average gas meter temp., °F	68	74	46			
V_m - volume of dry gas sampled @ meter conditions, $Ft.^3$	33.707	49.436	48.635			
P_b - barometric pressure, "Hg Abs.	24.43	24.43	24.43			
Q_s - Stack gas volume dry @ standard conditions, *SCFM	153415	211909	212739			
C_I - SO_2 in Impinger #1, mgs	22551.0	31037.4	20669.4			
C_I - SO_2 in Impinger #2, mgs	22689.6	23510.9	18744.9			
C_I - SO_2 in Impinger #3, mgs	9400.7	12450.6	20213.8			
C_T - total SO_2 in Impingers, mgs	54641.2	66998.9	59628.1			
ppm SO_2	26348.1	22306.4	19097.3			
C_{SO2} - emission rate of SO_2, lbs/day	963256.5	1126429	968149.3			
C_s - emission rate of S, lbs/day	481628.2	563214.7	484074.6			

* 70°F, 29.92"Hg

$$C_I = \frac{ML_I \times ML_B \times \underline{N} \times 32}{ML_A}$$

$$ppm\ SO_2 = \frac{0.7526 \times C_T \times (T_m + 460)}{V_m\ P_b}$$

$$C_T = C_I\ \#1 + C_I\ \#2 + C_I\ \#3$$

$$C_{SO2} = ppm\ SO_2 \times Q_s \times 238.3 \times 10^{-6}$$

$$C_s = \frac{C_{SO2}}{2}$$

Client Kennecott Copper

SO_2 EMISSION DATA

Unit Tested Converter Inlet Particulate

Run No.	1	2				
Date	4-5-73	4-5-73				
Time	1200-1403	1715-1850				
$\underline{N}$ - normality of $BaCl_2$	0.1000	0.1000				
ML_I - ml in impinger #1	240	227				
ML_I - ml in impinger #2	255	243				
ML_I - ml in impinger #3	-	-				
ML_A - ml in aliquot #1	1.0	1.0				
ML_A - ml in aliquot #2 & 3	1.0	1.0				
ML_A - ml in aliquot #3	-	-				
ML_B - ml of $BaCl_2$ to titrate #1	19.11	12.42				
ML_B - ml of $BaCl_2$ to titrate #2 & 3	22.85	15.13				
ML_B - ml of $BaCl_2$ to titrate #3	-	-				
T_m - average gas meter temp., °F	70	62				
V_m - volume of dry gas sampled @ meter conditions, $Ft.^3$	31.604	31.508				
P_b - barometric pressure, "Hg Abs.	24.43	24.43				
Q_s - Stack gas volume dry @ standard conditions, *SCFM	126655	135064				
C_I - SO_2 in Impinger #1, mgs	14676.5	9021.9				
C_I - SO_2 in Impinger #2, mgs	18645.6	11765.1				
C_I - SO_2 in Impinger #3, mgs	-	-				
C_T - total SO_2 in Impingers, mgs	33322.1	20787.0				
ppm SO_2	17215.0	10604.6				
C_{SO2} - emission rate of SO_2, lbs/day	519578.9	341317.0				
C_s - emission rate of S, lbs/day	259789.5	170658.5				

* 70°F, 29.92"Hg

$$C_I = \frac{ML_I \times ML_B \times \underline{N} \times 32}{ML_A}$$

$$C_T = C_I\ \#1 + C_I\ \#2 + C_I\ \#3$$

$$\text{ppm } SO_2 = \frac{0.7526 \times C_T \times (T_m + 460)}{V_m\ P_b}$$

$$C_{SO2} = \text{ppm } SO_2 \times Q_s \times 238.3 \times 10^{-6}$$

$$C_s = \frac{C_{SO2}}{2}$$

Client Kennecott Copper SO_2 EMISSION DATA

Unit Tested Reverb Outlet Particulate

Run No.	1	2	3	4		
Date	4-8-73	4-9-73	4-9-73	4-10-73		
Time	1735-1925	0900-1050	1300-1450	0945-1135		
$\underline{N}$ - normality of $BaCl_2$	0.1000	0.1000	0.1000	0.1000		
ML_T - ml in impinger #1	-	-	-	-		
ML_I - ml in impinger #2	260	208	258	253		
ML_I - ml in impinger #3	232	216	231	254		
ML_A - ml in aliquot #1	-	-	-	-		
ML_A - ml in aliquot #2	1.0	1.0	1.0	1.0		
ML_A - ml in aliquot #3	1.0	1.0	1.0	1.0		
ML_B - ml of $BaCl_2$ to titrate #1	-	-	-	-		
ML_B - ml of $BaCl_2$ to titrate #2	26.99	32.45	26.38	12.8		
ML_B - ml of $BaCl_2$ to titrate #3	2.02	3.55	2.72	0.30		
T_m - average gas meter temp., °F	78	85	93	86		
V_m - volume of dry gas sampled @ meter conditions, $Ft.^3$	40.131	40.544	43.826	41.367		
P_b - barometric pressure, "Hg Abs.	24.54	24.58	24.58	24.44		
Q_s - Stack gas volume dry @ standard conditions, *SCFM	237731	241956	257819	258213		
C_I - SO_2 in Impinger #1, mgs	-	-	-	-		
C_I - SO_2 in Impinger #2, mgs	22455.7	21598.7	21779.3	10362.9		
C_I - SO_2 in Impinger #3, mgs	1499.6	2453.8	2010.6	243.8		
C_T - total SO_2 in Impingers, mgs	23955.3	24052.5	23790.0	10606.7		
ppm SO_2	9843.6	9908.6	9185.3	4308.5		
C_{SO2} - emission rate of SO_2, lbs/day	557650.6	571308.0	564330.9	265109.9		
C_s - emission rate of S, lbs/day	278825.3	285654.0	282165.4	132555.0		

* 70°F, 29.92"Hg

$$C_I = \frac{ML_T \times ML_B \times \underline{N} \times 32}{ML_A}$$

$$\text{ppm } SO_2 = \frac{0.7526 \times C_T \times (T_m + 460)}{V_m \, P_b}$$

$$C_T = C_I \#1 + C_I \#2 + C_I \#3$$

$$C_{SO2} = \text{ppm } SO_2 \times Q_s \times 238.3 \times 10^{-6}$$

$$C_s = \frac{C_{SO2}}{2}$$

Job No. 755-09

Client Kennecott Copper SO_2 EMISSION DATA

Unit Tested Reverb Inlet Particulate

Run No.	2	3	4			
Date	4-9-73	4-9-73	4-10-73			
Time	0900-1153	1302-1718	0935-1135			
$\underline{N}$ - normality of $BaCl_2$	0.1000	0.1000	0.1000			
ML_I - ml in impinger #1	213	371	211			
ML_I - ml in impinger #2	227	172	283			
ML_I - ml in impinger #3	-	-	-			
ML_A - ml in aliquot #1	1.0	1.0	1.0			
ML_A - ml in aliquot #2	1.0	1.0	1.0			
ML_A - ml in aliquot #3	-	-	-			
ML_B - ml of $BaCl_2$ to titrate #1	28.60	19.85	0.30			
ML_B - ml of $BaCl_2$ to titrate #2	3.28	5.70	9.13			
ML_B - ml of $BaCl_2$ to titrate #3	-	-	-			
T_m - average gas meter temp., °F	61	91	74			
V_m - volume of dry gas sampled @ meter conditions, $Ft.^3$	40.966	37.823	38.875			
P_b - barometric pressure, "Hg Abs.	24.58	24.58	24.58			
Q_s - Stack gas volume dry @ standard conditions, *SCFM	187620	172393	170417			
C_I - SO_2 in Impinger #1, mgs	19493.8	23565.9	202.6			
C_I - SO_2 in Impinger #2, mgs	2382.6	3137.3	8268.1			
C_I - SO_2 in Impinger #3, mgs	-	-	-			
C_T - total SO_2 in Impingers, mgs	21876.4	26703.2	8470.7			
ppm SO_2	8517.1	11920.9	3564.2			
C_{SO2} - emission rate of SO_2, lbs/day	380799.4	489726.7	144743.7			
C_s - emission rate of S, lbs/day	190399.7	244863.3	72371.8			

* 70°F, 29.92"Hg

$$C_I = \frac{ML_I \times ML_B \times \underline{N} \times 32}{ML_A}$$

$$\text{ppm } SO_2 = \frac{0.7526 \times C_T \times (T_m + 460)}{V_m \; P_b}$$

$$C_T = C_I \#1 + C_I \#2 + C_I \#3$$

$$C_{SO2} = \text{ppm } SO_2 \times Q_s \times 238.3 \times 10^{-6}$$

$$C_s = \frac{C_{SO2}}{2}$$

Job No. 733-09

Client Kennecott Copper

Unit Tested Converter SO_2

SO_2 EMISSION DATA

Run No.	1	2	3	4		
Date	4-6-73	4-7-73	4-7-73	4-7-73		
Time	1650-1720	0935-1005	1025-1055	1145-1215		
N - normality of $BaCl_2$	.0100	.0100	.0100	.0100		
ML_I - ml in impinger #1	-	-	-	-		
ML_I - ml in impinger #2	324	244	239	258		
ML_I - ml in impinger #3	310	227	258	268		
ML_A - ml in aliquot #1	-	-	-	-		
ML_A - ml in aliquot #2	1.0	1.0	1.0	1.0		
ML_A - ml in aliquot #3	1.0	1.0	1.0	1.0		
ML_B - ml of $BaCl_2$ to titrate #1	-	-	-	-		
ML_B - ml of $BaCl_2$ to titrate #2	74.55	13.63	366.0	162.50		
ML_B - ml of $BaCl_2$ to titrate #3	1.27	0.30	27.41	6.10		
T_m - average gas meter temp., °F	80	63	68	76		
V_m - volume of dry gas sampled @ meter conditions, $Ft.^3$	10.696	8.788	12.085	10.657		
P_b - barometric pressure, "Hg Abs.	24.56	24.56	24.56	24.56		
Q_s - Stack gas volume dry @ standard conditions, *SCFM	207988	186233	217850	170589		
C_I - SO_2 in Impinger #1, mgs	-	-	-	-		
C_I - SO_2 in Impinger #2, mgs	7729.3	1064.2	27991.7	13416.0		
C_I - SO_2 in Impinger #3, mgs	126.0	21.8	2263.0	523.1		
C_T - total SO_2 in Impingers, mgs	7855.3	1086.0	30254.6	13939.1		
ppm SO_2	12143.3	1980.2	40467.3	21493.3		
C_{SO2} - emission rate of SO_2, lbs/day	601866.1	87881.5	2100799.8	873731.8		
C_s - emission rate of S, lbs/day	300933.1	43940.8	1050399.9	436865.9		

* 70°F, 29.92"Hg

$$C_I = \frac{ML_I \times ML_B \times N \times 32}{ML_A}$$

$$ppm\ SO_2 = \frac{0.7526 \times C_T \times (T_m + 460)}{V_m\ P_b}$$

$$C_T = C_I\ \#1 + C_I\ \#2 + C_I\ \#3$$

$$C_{SO2} = ppm\ SO_2 \times Q_s \times 238.3 \times 10^{-6}$$

$$C_s = \frac{C_{SO2}}{2}$$

Job No. 755-09

Client Kennecott Copper

Unit Tested Reverb Outlet SO_2

SO_2 EMISSION DATA

Run No.	1	2	3			
Date	4-9-73	4-9-73	4-9-73			
Time	1805-1830	1845-1910	1935-2000			
N - normality of $BaCl_2$	0.0100	0.0100	0.0100			
ML_I - ml in impinger #1	-	-	-			
ML_I - ml in impinger #2	259	264	256			
ML_I - ml in impinger #3	260	248	262			
ML_A - ml in aliquot #1	-	-	-			
ML_A - ml in aliquot #2	1.0	1.0	1.0			
ML_A - ml in aliquot #3	1.0	1.0	1.0			
ML_B - ml of $BaCl_2$ to titrate #1	-	-	-			
ML_B - ml of $BaCl_2$ to titrate #2	44.52	50.00	48.95			
ML_B - ml of $BaCl_2$ to titrate #3	0.85	1.05	2.05			
T_m - average gas meter temp., °F	91	88	82			
V_m - volume of dry gas sampled @ meter conditions, $Ft.^3$	8.524	8.264	8.203			
P_b - barometric pressure, "Hg Abs.	24.58	24.58	24.58			
Q_s - Stack gas volume dry @ standard conditions, *SCFM	247388	240480	253480			
C_I - SO_2 in Impinger #1, mgs	-	-	-			
C_I - SO_2 in Impinger #2, mgs	3689.8	4224.0	4010.0			
C_I - SO_2 in Impinger #3, mgs	70.7	83.3	171.9			
C_T - total SO_2 in Impingers, mgs	3760.5	4307.3	4181.9			
ppm SO_2	7449.6	8737.4	8460.1			
C_{SO2} - emission rate of SO_2, lbs/day	439174.2	500710.1	511029.4			
C_s - emission rate of S, lbs/day	219587.1	250355.0	255514.7			

* 70°F, 29.92"Hg

$$C_I = \frac{ML_I \times ML_B \times N \times 32}{ML_A}$$

$$C_T = C_I\ \#1 + C_I\ \#2 + C_I\ \#3$$

$$\text{ppm } SO_2 = \frac{0.7526 \times C_T \times (T_m + 460)}{V_m\ P_b}$$

$$C_{SO2} = \text{ppm } SO_2 \times Q_s \times 238.3 \times 10^{-6}$$

$$C_s = \frac{C_{SO2}}{2}$$

APPENDIX D

NO_x Emission Data

Job. No. 735-09

Client Kennecott Copper

Unit Tested Converter Stack

Date 4-4-73

Run No. 1 11:30 - 1:30

Flask Number	1	2	3	5		
Time	11:15A	11:45A	12:15P	12:45P		
P_I - Initial Vacuum of Flask, "Hg	22.55	22.55	22.55	22.55		
T_I - Initial Temperature of Flask, °F	39°	39°	40°	45°		
V_F - Volume of Flask, ml	2109	2079	2090	2100		
P_F - Final Vacuum of Flask, "Hg	+0.7	+0.7	+0.8	+0.5		
T_F - Final Temperature of Flask, °F	58°	58°	58°	58°		
μgNO_2 - micrograms of NO_2	0	5	10	5		
V_s - Volume of sample at standard conditions*, ml	1718.12	1693.39	1706.22	1676.78		
$ppmNO_2$ - Concentration of NO_2, PPM	0.0	1.55	3.08	1.57		
C_{NO_2} - Emission Rate of NO_2, lb/SCF*	0.0	1.8×10^{-7}	3.7×10^{-7}	1.9×10^{-7}		

*70°F, 29.92 "Hg

$$V_s = \frac{530\ (V_F - 25)}{29.92} \left(\frac{P_I}{T_I + 460} + \frac{P_F}{T_F + 460} \right)$$

$$C_{NO_2} = \frac{\mu gNO_2}{V_s} \times \frac{1\ lb/ft^3}{1.6 \times 10^4\ \mu g/ml} = 6.25 \times 10^{-5}\ \frac{\mu gNO_2}{V_s}$$

$$ppmNO_2 = \frac{525 \times \mu gNO_2}{V_s}$$

NO_x Emission Data

Job. No. 735-09

Client Kennecott Copper

Unit Tested Converter Stack

Date 4-4-73

Run No. 2 3:00 PM

Flask Number	6	7	8	9		
Time	3:15	3:25	3:35	3:45		
P_I - Initial Vacuum of Flask, "Hg	22.40	22.60	22.80	22.60		
T_I - Initial Temperature of Flask, °F	51°	50°	56°	56°		
V_F - Volume of Flask, ml	2105	2093	2067	2094		
P_F - Final Vacuum of Flask, "Hg	+0.3	+0.3	0.0	-0.2		
T_F - Final Temperature of Flask, °F	49°	49°	49°	49°		
μgNO_2 - micrograms of NO_2	0	10	0	0		
V_s - Volume of sample at standard conditions*, ml	1636.84	1644.91	1598.29	1590.82		
$ppmNO_2$ - Concentration of NO_2, PPM	0.0	3.19	0.0	0.0		
C_{NO_2} - Emission Rate of NO_2, lb/SCF*	0.0	3.8×10^{-7}	0.0	0.0		

*70°F, 29.92 "Hg

$$V_s = \frac{530\ (V_F - 25)}{29.92}\left(\frac{P_I}{T_I + 460} + \frac{P_F}{T_F + 460}\right)$$

$$C_{NO_2} = \frac{\mu gNO_2}{V_s} \times \frac{1\ lb/ft^3}{1.6 \times 10^4\ \mu g/ml} = 6.25 \times 10^{-5}\ \frac{\mu gNO_2}{V_s}$$

$$ppmNO_2 = \frac{525 \times \mu gNO_2}{V_s}$$

NO_x Emission Data

Job. No. 735-09

Client Kennecott Copper

Unit Tested Converter Stack

Date 4-4-73

Run No. 3

Flask Number	10	11	12	13		
Time	4:15	4:45	4:55	5:10		
P_I - Initial Vacuum of Flask, "Hg	22.60	22.60	22.60	22.60		
T_I - Initial Temperature of Flask, °F	55°	54°	54°	53°		
V_F - Volume of Flask, ml	2092	2089	2095	2094		
P_F - Final Vacuum of Flask, "Hg	+0.2	+1.30	+1.25	+0.2		
T_F - Final Temperature of Flask, °F	60°	66°	66°	65°		
μgNO_2 - micrograms of NO_2	15	5	15	10		
V_s - Volume of sample at standard conditions*, ml	1620.86	1697.93	1699.38	1628.57		
$ppmNO_2$ - Concentration of NO_2, PPM	4.86	1.55	4.63	3.22		
C_{NO_2} - Emission Rate of NO_2, lb/SCF*	5.8×10^{-7}	1.55×10^{-7}	5.5×10^{-7}	3.8×10^{-7}		

*70°F, 29.92 "Hg

$$V_s = \frac{530\ (V_F - 25)}{29.92} \left(\frac{P_I}{T_I + 460} + \frac{P_F}{T_F + 460} \right)$$

$$C_{NO_2} = \frac{\mu gNO_2}{V_s} \times \frac{1\ lb/ft^3}{1.6 \times 10^4\ \mu g/ml} = 6.25 \times 10^{-5}\ \frac{\mu gNO_2}{V_s}$$

$$ppmNO_2 = \frac{525 \times \mu gNO_2}{V_s}$$

NO_x Emission Data

Job. No. 735-09

Client Kennecott Copper

Unit Tested Reverb Stack

Date 4-6-73

Run No. 1

Flask Number	1	2	3	5		
Time	4:30	4:40	4:50	5:00		
P_I - Initial Vacuum of Flask, "Hg	22.40	22.50	22.50	22.50		
T_I - Initial Temperature of Flask, °F	62°	62°	62°	61°		
V_F - Volume of Flask, ml	2109	2079	2090	2100		
P_F - Final Vacuum of Flask, "Hg	-0.5	-2.9	-1.1	0.0		
T_F - Final Temperature of Flask, °F	64°	64°	64°	65°		
μgNO_2 - micrograms of NO_2	15	20	5	10		
V_s - Volume of sample at standard conditions*, ml	1548.9	1366.93	1499.9	1587.37		
$ppmNO_2$ - Concentration of NO_2, PPM	5.08	7.68	1.75	3.31		
C_{NO_2} - Emission Rate of NO_2, lb/SCF*	6.1×10^{-7}	9.1×10^{-7}	2.1×10^{-7}	3.9×10^{-7}		

*70°F, 29.92 "Hg

$$V_s = \frac{530\ (V_F - 25)}{29.92}\left(\frac{P_I}{T_I + 460} + \frac{P_F}{T_F + 460}\right)$$

$$C_{NO_2} = \frac{\mu gNO_2}{V_s} \times \frac{1\ lb/ft^3}{1.6 \times 10^4\ \mu g/ml} = 6.25 \times 10^{-5}\ \frac{\mu gNO_2}{V_s}$$

$$ppmNO_2 = \frac{525 \times \mu gNO_2}{V_s}$$

NO_x Emission Data

Job. No. 735-09

Client Kennecott Copper

Unit Tested Reverb Stack

Date 4-6-73

Run No. 2

Flask Number	6	7	8	9		
Time	5:00	5:10	5:20	5:30		
P_I - Initial Vacuum of Flask, "Hg	22.50	22.60	22.40	22.60		
T_I - Initial Temperature of Flask, °F	64°	61°	62°	61°		
V_F - Volume of Flask, ml	2105	2093	2067	2094		
P_F - Final Vacuum of Flask, "Hg	-0.1	-0.2	0.0	-2.9		
T_F - Final Temperature of Flask, °F	65°	65°	65°	65°		
μgNO_2 - micrograms of NO_2	5	15	10	0		
V_s - Volume of sample at standard conditions*, ml	1575.06	1575.09	1552.2	1387.36		
$ppmNO_2$ - Concentration of NO_2, PPM	1.67	5.0	3.38	0.0		
C_{NO_2} - Emission Rate of NO_2, lb/SCF*	2.0×10^{-7}	6.0×10^{-7}	4.0×10^{-7}	0.0		

*70°F, 29.92 "Hg

$$V_s = \frac{530\ (V_F - 25)}{29.92} \left(\frac{P_I}{T_I + 460} + \frac{P_F}{T_F + 460} \right)$$

$$C_{NO_2} = \frac{\mu gNO_2}{V_s} \times \frac{1\ lb/ft^3}{1.6 \times 10^4\ \mu g/ml} = 6.25 \times 10^{-5}\ \frac{\mu gNO_2}{V_s}$$

$$ppmNO_2 = \frac{525 \times \mu gNO_2}{V_s}$$

NO_x Emission Data

Job. No. 735-09

Client Kennecott Copper

Date 4-6-73

Unit Tested Reverb Stack

Run No. 3

Flask Number	10	11	12	13		
Time	5:30	5:40	5:50	6:00		
P_I - Initial Vacuum of Flask, "Hg	22.60	22.50	22.50	22.50		
T_I - Initial Temperature of Flask, °F	60°	61°	59°	59°		
V_F - Volume of Flask, ml	2092	2089	2053	2094		
P_F - Final Vacuum of Flask, "Hg	-2.9	0.0	-1.2	-2.5		
T_F - Final Temperature of Flask, °F	64°	63°	64°	65°		
μgNO_2 - micrograms of NO_2	25	10	0	0		
V_s - Volume of sample at standard conditions*, ml	1388.69	1578.95	1475.12	1414.35		
$ppmNO_2$ - Concentration of NO_2, PPM	9.45	3.32	0.0	0.0		
NO_2 - Emission Rate of NO_2, lb/SCF*	11.3×10^{-7}	4.0×10^{-7}	0.0	0.0		

70°F, 29.92 "Hg

$$= \frac{530\ (V_F - 25)}{29.92} \left(\frac{P_I}{T_I + 460} + \frac{P_F}{T_F + 460} \right)$$

$$_2 = \frac{\mu gNO_2}{V_s} \times \frac{1\ lb/ft^3}{1.6 \times 10^4\ \mu g/ml} = 6.25 \times 10^{-5}\ \frac{\mu gNO_2}{V_s}$$

$$NO_2 = \frac{525 \times \mu gNO_2}{V_s}$$

APPENDIX E

SULFUR TRIOXIDE CALCULATIONS

CONVERTER STACK

	Particulate Runs			SO_2 Runs		
Run No.	1	2	3	* 2	3	4
Date	4-5-73	4-5-73	4-5-73	4-7-73	4-7-73	4-7-73
$\underline{N}$ - normality of $BaCl_2$	0.01	0.01	0.01	0.01	0.01	0.01
ML_I - ml in impinger	173	202	149	240	223	225
ML_A - ml in aliquot	1.0	1.0	1.0	5.0	5.0	5.0
ML_3 - ml in $BaCl_2$ to titrate	0.75	0.90	1.45	2.25	1.78	1.18
T_m - average gas meter temp., °F	68	74	46	63	68	76
V_m - volume of dry gas sampled @ meter conditions, Ft.^{3}	33.707	49.436	48.635	8.788	12.085	10.657
P_b - barometric pressure, "Hg Abs.	24.43	24.43	24.43	24.56	24.56	24.56
Q_s - stack gas volume dry @ standard conditions, *SCFM	153415	211909	212739	186233	217850	170589
C_I - SO_3 in impinger, mgs	77.9	109.1	129.7	64.8	47.6	31.9
ppm SO_3	30	29	33	80	69	34
C_{SO3} - emission rate of SO_3, lbs/day	1096.8	1464.4	1672.9	3550.3	3582.0	1382.1

$$C_I = \frac{ML_I \times ML_B \times \underline{N} \times 49 \times 98}{(ML_A)\ 80}$$

$$\text{ppm } SO_3 = \frac{0.6021 \times C_I \times (T_m + 460)}{V_m P_b}$$

$$C_{SO3} = \text{ppm } SO_3 \times Q_s \times 238.3 \times 10^{-6}$$

* Run #1 was omitted - No SO_3 was found.

SULFUR TRIOXIDE CALCULATIONS

REVERBERATORY STACK

	Particulate Runs				SO_2 Runs		
Run No.	1	2	3	4	1	2	3
Date	4-8-73	4-9-73	4-9-73	4-10-73	4-9-73	4-9-73	4-9-73
$\underline{N}$ - normality of $BaCl_2$	0.01	0.01	0.01	0.01	0.01	0.01	0.01
ML_I - ml in impinger	201	202	191	242	233	251	226
ML_A - ml in aliquot	1.0	1.0	1.0	1.0	1.0	1.0	1.0
ML_B - ml in $BaCl_2$ to titrate	0.60	1.15	0.55	9.5	0.45	0.65	0.90
T_m - average gas meter temp., °F	78	85	93	86	91	88	82
V_m - volume of dry gas sampled @ meter conditions, Ft.3	40.131	40.544	43.826	41.367	8.524	8.264	8.203
P_b - barometric pressure, "Hg Abs.	24.54	24.58	24.58	24.44	24.58	24.58	24.58
Q_s - stack gas volume dry @ standard conditions, *SCFM	237731	241956	257819	258213	247388	240480	253480
C_I - SO_3 in impinger, mgs	72.39	139.44	63.06	1379.97	62.9	97.9	122.1
ppm SO_3	24	46	19	449	100	159	198
C_{SO3} - emission rate of SO_3, lbs/day	1359.6	2652.3	1167.3	27627.9	5895.2	9111.7	11960.0

$$C_I = \frac{ML_I \times ML_B \times \underline{N} \times 49 \times 98}{(ML_A)\ 80}$$

$$\text{ppm } SO_3 = \frac{0.6021 \times C_I \times (T_m \times 460)}{V_m P_b}$$

$$C_{SO3} = \text{ppm } SO3 \times Q_s \times 238.3 \times 10^{-6}$$

APPENDIX F

EQUIPMENT CALIBRATION

Equipment	Date of Calibration	Calibration Factor
Pitot Tube #6	3/1/73	0.778
Pitot Tube #7	3/1/73	0.776
Pitot Tube #8	3/28/73	0.792
Pitot Tip #3	3/7/73	0.560
Pitot Tip #6	3/7/73	0.364
Pitot Tip #9	3/7/73	0.301
Pitot Tip #10	3/7/73	0.230
Pitot Tip #11	3/7/73	0.240
Dry Gas Meter #1	3/27/73	0.929
Stack Unit Orifice #1	3/16/73	
Dry Gas Meter #2	3/27/73	0.959
Stack Unit Orifice #2	3/16/73	
NO_x Flasks and Stopcocks	3/1/73	