Note: This is a reference cited in *AP 42, Compilation of Air Pollutant Emission Factors, Volume I Stationary Point and Area Sources.* AP42 is located on the EPA web site at www.epa.gov/ttn/chief/ap42/

The file name refers to the reference number, the AP42 chapter and section. The file name "ref02_c01s02.pdf" would mean the reference is from AP42 chapter 1 section 2. The reference may be from a previous version of the section and no longer cited. The primary source should always be checked.

AP-42 Section Number: 12.3

Reference Number: 2

Title: Background Information for New Source Performance Standards: Primary Copper, Zinc and Lead Smelters, Volume I, Proposed Standards

EPA-450/2-74-002a

US EPA

October 1974

EPA-450/2-74-002a

BACKGROUND INFORMATION FOR NEW SOURCE PERFORMANCE STANDARDS: PRIMARY COPPER, ZINC, AND LEAD SMELTERS

VOLUME 1: PROPOSED STANDARDS

ENVIRONMENTAL PROTECTION AGENCY
Office of Air and Waste Management
Office of Air Quality Planning and Standards
Research Triangle Park, North Carolina 27711

October 1974

This report is issued by the Environmental Protection Agency to report technical data of interest to a limited number of readers. Copies are available free of charge to Federal employees, current contractors and grantees, and nonprofit organizations - as supplies permit - from the Air Pollution Technical Information Center, Environmental Protection Agency, Research Triangle Park, North Carolina 27711; or, for a fee, from the National Technical Information Service, 5285 Port Royal Road, Springfield, Virginia 22161.

Publication No. EPA-450/2-74-002a

TABLE OF CONTENTS

	Page
LIST OF FIGURES	vii
LIST OF TABLES	x
ABSTRACT	xiii
1. SUMMARY	1-1
1.1 SUMMARY OF PROPOSED STANDARDS	1-1
1.2 SUMMARY OF BACKGROUND INFORMATION	1-7
2. INTRODUCTION	2-1
3. PRIMARY EXTRACTION PROCESSES FOR COPPER, ZINC AND LEAD	3-1
3.1 PYROMETALLURGICAL PROCESSES	3-1
3.1.1 Copper Smelting	3-1
References for Section 3.1.1	3-118
3.1.2 Zinc Smelting	3-125
References for Section 3.1.2	3-167
3.1.3 Lead Smelting	3-170
References for Section 3.1.3	3-199
3.1.4 Combined Lead and Zinc Smelting	3-201
References for Section 3.1.4	3-211
3.2 HYDROMETALLURGICAL PROCESSES	3-213
3.2.1 Summary	3-213
3.2.2 Copper Extraction	3-215
3.2.3 Zinc Extraction	3-226
3.2.4 Lead Extraction	3-227
References for Section 3.2	3-233
4. CONTROL TECHNIQUES	4-1
4.1 SULFURIC ACID PLANTS	4-1
4.1.1 Summary	4-1
4.1.2 General Discussion	4-3
References for Section 4.1	4-20
4.2 ELEMENTAL SULFUR PLANTS	4-22
4.2.1 Summary	4-22

Page

4.2.2 General Discussion 4-23
References for Section 4.2 4-48
4.3 SCRUBBING SYSTEMS 4-50
4.3.1 Calcium-Based Scrubbing Systems 4-53
4.3.2 Dimethylaniline (DMA) Scrubbing 4-65
4.3.3 Ammonia Scrubbing Systems 4-75
4.3.4 Sodium Sulfite-Bisulfite Scrubbing 4-82
References for Section 4.3 4-88
4.4 PARTICULATE REMOVAL SYSTEMS 4-91
References for Section 4.4 4-101
5. SURVEY OF DOMESTIC AND FOREIGN PRIMARY COPPER, ZINC AND LEAD SMELTERS 5-1
5.1 PRIMARY COPPER SMELTERS 5-1
5.1.1 Domestic Copper Smelters 5-1
5.1.2 Foreign Copper Smelters 5-16
5.2 PRIMARY ZINC SMELTERS 5-18
5.2.1 Domestic Zinc Smelters 5-18
5.2.2 Foreign Zinc Smelters 5-27
5.3 PRIMARY LEAD SMELTERS 5-28
5.3.1 Domestic Lead Smelters 5-28
5.3.2 Foreign Primary Lead Smelters 5-35
References for Section 5 5-37
6. ECONOMIC ANALYSIS 6-1
6.1 COPPER EXTRACTION 6-1
6.1.1 Copper Industry Economic Profile 6-1
6.1.2 Cost Analysis of Alternative Control Strategies 6-23
6.1.3 Economic Impact of the New Source Performance Standard 6-46
References for Section 6.1 6-64
6.2 ZINC EXTRACTION 6-66
6.2.1 Zinc Industry Economic Profile 6-66
6.2.2 Cost Analysis of Alternative Control Strategies 6-74

Page

6.2.3 Impact of New Source Performance Standards 6-96

References for Section 6.2 6-105

6.3 LEAD EXTRACTION 6-106

6.3.1 Lead Industry Economic Profile 6-106

6.3.2 Cost Analysis of Alternative Control Strategies 6-113

6.3.3 Impact of New Source Performance Standards 6-136

References for Section 6.3 6-139

7. RATIONALE FOR THE PROPOSED STANDARDS 7-1

7.1 SELECTION OF SOURCE CATEGORIES 7-1

7.2 METHODOLOGY FOR DEVELOPING PROPOSED STANDARDS. 7-4

7.3 SELECTION OF POLLUTANTS 7-9

7.4 SELECTION OF AFFECTED FACILITIES 7-10

7.5 DETERMINATION OF EMISSION LIMITS 7-11

7.5.1 Choice of Best Demonstrated Technology 7-11

7.5.2 Quantitative Emission Limits 7-39

References for Section 7 7-58

8. ENVIRONMENTAL EFFECTS 8-1

8.1 SECONDARY POLLUTION 8-1

8.1.1 Neutralization of Sulfuric Acid 8-5

8.1.2 Scrubbing Systems 8-17

8.2 ENERGY IMPACT 8-33

References for Section 8 8-46

APPENDIX I. Material Balances for Model Smelters I-1

APPENDIX II. Outline of Group II-A NSPS Development II-1

APPENDIX III. Analysis of Continuous SO_2 Monitor Data and Determination of an Upper Limit for Sulfuric Acid Plant Catalyst Deterioration III-1

APPENDIX IV. Model Smelter Energy Balances IV-1

APPENDIX V. Manual Sulfur Dioxide Tests Performed at Single-Stage Acid Plants V-1

APPENDIX VI. Analysis of Dual-Absorption Acid Plant Continuous SO_2 Monitoring Data VI-1

Page

APPENDIX VII. Results of Particulate Tests Performed at Primary and Secondary Nonferrous Smelting Industries VII-1

APPENDIX VIII. Visible Emission Observations VIII-1

APPENDIX IX. Representative Model Copper Facilities Using Gas Blending IX-1

Bibliographic Data Sheet X-1

LIST OF FIGURES

Figure		Page
3-1	Copper Smelter	3-2
3-2	Domestic Copper Smelting Technology	3-3
3-3	Types of Roasters	3-4
3-4	Reverberatory Smelting Furnace	3-6
3-5	Copper Converting Operation	3-8
3-6	Types of Roasters	3-13
3-7	Reverberatory Smelting Furnace	3-25
3-8	Electric Smelting Furnace	3-37
3-9	Outokumpu Flash Smelting Furnace	3-50
3-10	INCO Flash Smelting Furnace	3-52
3-11	Dry Method for Recovering Copper, Lead and Zinc from Flash Furnace and Converter Dusts	3-66
3-12	Wet Method for Recovering Copper, Lead and Zinc from Flash Furnace and Converter Dusts	3-67
3-13	Copper Converter	3-77
3-14	Copper Converter Operation	3-78
3-15	Fluctuations in Converter Off-gas Volume and Sulfur Dioxide Concentrations	3-83
3-16	Converter Hood	3-85
3-17	Hoboken Converter	3-86
3-18	Noranda Continuous Smelting	3-103
3-19	WORCRA Continuous Smelting	3-106
3-20	Mitsubishi Continuous Smelting	3-108
3-21	TBRC Continuous Smelting	3-111
3-22	Primary Pyrometallurgical Zinc Smelting Process	3-120
3-23	Primary Electrolytic Zinc Smelting Process	3-121
3-24	Multiple-hearth Roasting Furnace	3-127
3-25	Flash Roasting Furnace	3-129
3-26	Fluid-bed Roaster	3-132
3-27	Downdraft Sintering Machines	3-140
3-28	Zinc Downdraft Sintering Machine with Gas Recirculation	3-146

Figure		Page
3-29	Horizontal Retort	3-151
3-30	Vertical Retort Furnace	3-153
3-31	Electrothermic Furnace	3-155
3-32	Electrolytic Zinc Extraction	3-159
3-33	Primary Lead Smelting Process	3-165
3-34	Single-Stream Operation	3-172
3-35	Dual-Stream Operation	3-173
3-36	Updraft Sintering with Weak Gas Recirculation	3-178
3-37	Lead Blast Furnace	3-184
3-38	Boliden Electric Furnace	3-189
3-39	Sulfur Balance in Boliden Electric Furnace	3-191
3-40	ISF Smelting Process	3-197
3-41	The Imperial Smelting Furnace	3-201
3-42	Cymet Hydrometallurgical Process	3-212
3-43	Arbiter Hydrometallurgical process	3-215
3-44	Treatment of Galena Using Amine Leaching	3-223
3-45	Treatment of Galena Using Ferric Sulfate Leaching	3-226
4-1	Sulfuric Acid Plant	4-4
4-2	Allied Chemical Sulfur Dioxide Reduction Process	4-26
4-3	Outokumpu Sulfur Dioxide Reduction Process	4-29
4-4	Limestone/Lime Scrubbing Processes	4-55
4-5	DMA Scrubbing Process	4-68
4-6	Cominco Ammonia Scrubbing Process	4-77
4-7	Davy Power Gas Scrubbing Process	4-84
4-8	Composite Grade (fractional) Efficiency Curves Based on Test Silica Dust	4-93
5-1	Existing Domestic Primary Copper Smelters	5-2
5-2	Process Equipment Used by Existing Domestic Primary Copper Smelters	5-7
5-3	Current Status of SO_2 Control at Existing Primary Copper Smelters	5-9
5-4	Existing Domestic Primary Zinc Smelters	5-19
5-5	Process Equipment Used by Existing Domestic Primary Zinc Smelters	5-22

Figure		Page
5-6	Current Status of SO_2 Control at Existing Primary Zinc Smelters	5-25
5-7	Existing Domestic Primary Lead Smelters	5-29
5-8	Process Equipment Used by Existing Domestic Primary Lead Smelters	5-31
5-9	Current Status of SO_2 Control at Existing Primary Lead Smelters	5-34
6-1	Quarterly Price Movements for Electrolytic Wirebars and No. 2 Copper Scrap	6-15
6-2	Price Movements for Refined Wirebars on a Monthly Basis for Two Major-Action Markets and U.S. Producers, Sept. 1968-Sept. 1970	6-17
6-3	Model Copper Smelting Facilities -- Electric Smelting Options	6-31
6-4	Model Copper Smelting Facilities -- Flash Smelting Options	6-33
6-5	Model Copper Smelting Facilities -- Roaster/ Reverberatory Smelting Options	6-35
6-6	Model Copper Smelting Facilites -- Reverberatory Smelting Options	6-37
6-7	Monthly Average Slab Zinc Prices, 1969-1972	6-68
6-8	Model Zinc Smelting Facilities -- Conventional Roasting and Sintering Option	6-76
6-9	Model Zinc Smelting Facilities -- Electrolytic Zinc Options	6-78
6-10	Model Zinc Smelting Facilities -- Roast-Sintering Option	6-80
6-11	Monthly Average Quoted Lead Prices, 1969-1972	6-112
6-12	Model Lead Smelting Facilities -- Sintering Machine Without Gas Recirculation Options	6-115
6-13	Model Lead Smelting Facilities -- Sintering Machine with Gas Recirculation Option	6-117
6-14	Model Lead Smelting Facilities -- Electric Furnace Option	6-119

LIST OF TABLES

Table		Page
3-1	Typical Levels of Volatile Metals in Domestic Copper Ore Concentrates	3-68
3-2	Sulfur Content of Materials at Typical Electrolytic Smelters	3-131
3-3	Calcine Sulfur Content of Typical Smelters Using Fluid-Bed Roasters	3-134
3-4	Calcine Sulfur Content	3-134
3-5	Toho Zinc Calcine Analysis	3-137
3-6	Summary of Typical Zinc Roaster Parameters	3-137
3-7	Sulfur Content of Typical Zinc Sinter Feed	3-141
3-8	Calcine Produced at Typical Electrolytic Zinc Smelters	3-144
3-9	Typical Sulfur Emissions for a Primary Lead Smelter	3-167
3-10	Typical Updraft Sintering Machine Feed and Product Data	3-177
3-11	Feed and Product Comparisons of Sinter from Machine with and Without Weak Gas Recirculation	3-182
3-12	Typical ISF Process Materials Analysis	3-199
3-13	Typical ISF Sinter Analysis	3-200
3-14	Sulfur Balance of ISF Installation	3-203
4-1	Estimated Maximum Impurity Limits for Metallurgical Off-gases Used to Manufacture Sulfuric Acid	4-10
4-2	Elemental Sulfur Plant Tail Gas "Clean-up" Processes	4-42
4-3	Calcium Scrubbing Installations	4-60
4-4	ASARCO DMA Installations	4-70
4-5	Cominco-Type Ammonia Scrubbing Installations	4-79
4-6	Davy Power Gas Scrubbing Installations	4-86
4-7	Baghouse Emission Test Results	4-100
5-1	Existing U.S. Copper Smelters	5-3
5-2	Foreign Copper Smelters	5-17
5-3	Existing U.S. Zinc Smelters	5-20
5-4	Existing U.S. Lead Smelters	5-30

Table		Page

6-1 Production and Sales of Refined Copper for the Leading Corporations in the U.S. for 1971 6-2
6-2 Smelter and Refinery Statistics -- Location, Capacity, and Ownership 6-3
6-3 Annual Trends in Copper Production Activities for the U.S., 1962-1971 6-6
6-4 Production, Supply, and Producers' Stocks of Refined Copper Metal in the U.S.. 6-7
6-5 Trade Balance for the U.S.. 6-9
6-6 Production/Capacity Data for Copper Smelters 6-10
6-7 Consumption of Refined Copper by Fabricators in the U.S. . 6-12
6-8 End Uses for Domestic Copper Consumption for Most Recently Available 10-year Period 6-13
6-9 Selected Statistics and Operating Ratios, 1960-1967 6-19
6-10 Elements of Capital Costs for Smelter Technologies 6-25
6-11 Capital Costs and Operating Requirements for Control Processes 6-29
6-12 Control Costs for Model Copper Smelting Facilities 6-39
6-13 Summary of Smelter Control Costs Allocated or Anticipated 6-49
6-14 Model Income Statement for Integrated Producers, Independent Mines, and Custom Smelters. 6-51
6-15 Domestic Slab Zinc Capacity, 1968-1972 6-67
6-16 Domestic Slab Zinc Consumption 6-71
6-17 Supply of Slab Zinc by Source 6-72
6-18 Foreign Sources of Ore Concentrates and Slab Zinc, 1971 . . 6-73
6-19 Control Costs for Model Zinc Smelters 6-82
6-20 Capital Costs for Selected SO_2 Control Alternatives 6-86
6-21 Operating Costs for Selected SO_2 Control Alternatives . . . 6-88
6-22 Economic Impact of By-product Disposition 6-93
6-23 Domestic Pig Lead Production Statistics, 1968-1971 6-107
6-24 U.S. Supply of Pig Lead, 1968-1971. 6-108
6-25 Lead Imports, 1971. 6-109

Table		Page
6-26	Domestic Lead Consumption, 1963-1971	6-111
6-27	Control Costs for Model Lead Smelters	6-121
6-28	Capital Costs for Selected SO_2 Control Alternatives	6-124
6-29	Operating Costs for Selected SO_2 Control Alternatives	6-127
6-30	Impact of Disposal Options	6-132
7-1	Frequency of Distribution of Adjusted Outlet SO_2 Concentrations	7-48
8-1	Sulfur Oxide Generation and Recovery at U.S. Smelters (1969-1972)	8-6
8-2	Emission Control Energy Requirements -- Copper Smelting	8-36
8-3	Emission Control Energy Requirements -- Zinc Smelting	8-37
8-4	Emission Control Energy Requirements -- Lead Smelting	8-38

ABSTRACT

This document presents information on the derivation of proposed standards of performance for new and modified primary copper, zinc, and lead smelters. The report describes the various extraction processes available for copper, zinc, and lead, the various systems available for controlling emissions of sulfur oxides and particulate matter from these processes, the economic impact of the proposed standards, the environmental and energy-consumption effects associated with the various processes and control systems, and the general rationale for the proposed standards.

The standards developed require control at levels typical of best demonstrated existing technology. These levels were determined by extensive on-site investigations; consideration of process design factors, maintenance practices, available test data, and characteristics of plant emissions; comprehensive literature examination; and consultations with the National Air Pollution Control Techniques Advisory Committee, members of the academic community, and industry.

1. SUMMARY

1.1 SUMMARY OF PROPOSED STANDARDS

Standards of performance are being proposed to limit atmospheric emissions of sulfur dioxide and particulate matter from primary copper, zinc and lead smelters. These standards apply not only to new smelters constructed following the date of proposal of these standards in the Federal Register, but also to any existing smelters which are modified following the date of proposal. The term modification is defined in the 1970 Clean Air Act as "...any physical change in, or change in the method of operation of, a stationary source which increases the amount of any air pollutant emitted by such source or which results in the emission of any air pollutant not previously emitted." The standards themselves are defined in the Act as "...a standard for emissions of air pollutants which reflects the degree of emission limitation achievable through the application of the best system of emission reduction which (taking into account the cost of achieving such reduction) the Administrator determines has been adequately demonstrated."

The proposed standards apply to the following process units within a primary copper, zinc or lead smelter: Copper - dryer, roaster, smelting furnace, and copper converter; zinc - roaster and sintering machine; lead - sintering machine, sintering machine discharge end, blast furnace, dross reverberatory furnace, electric smelting furnace, and converter. These process units are termed affected facilities.

The proposed standards are as follows:

Primary Copper Smelters

Any gases discharged into the atmosphere from any dryer may not:

1. Contain particulate matter in excess of 50 milligrams per normal cubic meter (0.022 grains per dry standard cubic foot).
2. Exhibit 20 percent opacity or greater, except for two minutes in any one hour.

Any gases discharged into the atmosphere from any roaster, smelting furnace, or copper converter may not:

1. Contain sulfur dioxide in excess of 0.065 percent by volume (650 ppm), except that gases discharged from any existing reverberatory smelting furnace that is altered to increase the sulfur dioxide emissions from the furnace are exempted from this requirement when the total sulfur dioxide emissions from all existing and affected facilities at the smelter are not increased.
2. Exhibit 20 percent opacity or greater, except for two minutes in any one hour, if a sulfuric acid plant is utilized to control sulfur dioxide emissions.

Primary Zinc Smelters

Any gases discharged into the atmosphere from any roaster may not:

1. Contain sulfur dioxide in excess of 0.065 percent by volume (650 ppm).

2. Exhibit 20 percent opacity or greater, except for two minutes in any one hour, if a sulfuric acid plant is utilized to control sulfur dioxide emissions.

Any gases discharged into the atmosphere from any sintering machine may not:

1. Contain particulate matter in excess of 50 milligrams per normal cubic meter (0.022 grains per dry standard cubic foot).
2. Exhibit 20 percent opacity or greater, except for two minutes in any one hour.

Primary Lead Smelters

Any gases discharged into the atmosphere from any sintering machine, electric smelting furnace, or converter may not:

1. Contain sulfur dioxide in excess of 0.065 percent by volume (650 ppm).
2. Exhibit 20 percent opacity or greater, except for two minutes in any one hour, if a sulfuric acid plant is utilized to control sulfur dioxide emissions.

Any gases discharged into the atmosphere from any blast furnace, dross reverberatory furnace, or sintering machine discharge end may not:

1. Contain particulate matter in excess of 50 milligrams per normal cubic meter (0.022 grains per dry standard cubic foot).
2. Exhibit 20 percent opacity or greater, except for two minutes in any one hour.

These standards apply at the point where emissions are discharged from the air pollution control system or from the affected facility if no air pollution control system is utilized. Compliance with the sulfur dioxide emission limit applicable to copper smelters will be determined by monitoring the concentration of sulfur dioxide in the effluent gases discharged to the atmosphere over three six-hour periods. The average sulfur dioxide emission concentration during each of these three periods will be determined. An average sulfur dioxide emission concentration based on the three six-hour average sulfur dioxide emission concentrations will be calculated. It is this average of the three six-hour average sulfur dioxide emission concentrations which must be less than 0.065 percent. In the case of zinc and lead smelters, compliance with the sulfur dioxide concentration emission limits will be determined in the same manner, except that three two-hour periods will be used rather than three six-hour periods.

Although the particulate and sulfur dioxide standards are in the form of emission concentrations, compliance cannot be achieved by means of dilution with air or other gases. If dilution gases are added following the air pollution control system, prior to the point of emission measurement, the amount of dilution must be determined and the emission concentration corrected to the undiluted basis.

Sulfur dioxide emission concentrations released to the atmosphere must be continuously monitored. Continuous monitoring is defined to be "...at least one measurement of sulfur dioxide concentration...in each

fifteen-minute period." The performance characteristics of the monitoring system installed must meet the following specifications:

Parameter	Specification
Accuracy[a] (Relative)	≤20% of reference mean value[a]
Calibration error[a]	<5% of each (50%, 90%) calibration gas mixture value
Zero drift[a] (2 hr)	≤2% of emission standard[a]
Zero drift[a] (24 hr)	≤4% of emission standard[a]
Calibration drift[a] (2 hr)	≤2% of emission standard[a]
Calibration drift[a] (24 hr)	≤5% of emission standard[a]
Response time	15 min maximum
Operational period[a]	168 hr minimum

[a]Expressed as the sum of the absolute mean value plus 95 percent confidence interval of a series of tests.

Relative accuracy refers to the difference in concentration values between the monitoring system and the EPA reference test method, expressed as a percentage of the concentration value determined by the EPA reference test method.

Six-hour average sulfur dioxide emission concentrations, as indicated by the continuous monitor installed at primary copper smelters, must be calculated and recorded daily, for four consecutive six-hour periods of each operating day. Two-hour average sulfur dioxide emission concentrations must be calculated and recorded daily, for twelve consecutive two-hour periods of each operating day, at primary zinc or lead smelters. A file of all measurements

and calculations is to be maintained for a two-year period.

Compliance with the sulfur dioxide and particulate matter standards will be determined by a performance test. The sulfur dioxide emission concentrations will be determined by the continuous monitoring system. Three runs will constitute a performance test. One continuous six-hour sample is considered one run at a primary copper smelter, and one continuous two-hour sample will be considered one run at primary zinc or lead smelters. The particulate matter emission concentrations will be determined by EPA Test Method 5, as published in the December 23, 1971, Federal Register (36 FR 24876).

Compliance with the opacity standards will be determined by EPA Test Method 9, as published in the December 23, 1971, Federal Register (36 FR 24876).

1.2 SUMMARY OF BACKGROUND INFORMATION

The purpose of this report is to document the information and rationale used to develop the proposed new source performance standards for newly constructed and modified primary copper, zinc and lead smelters. Thus, this document reviews the various smelting processes for the extraction of copper, zinc and lead; the various emission reduction systems that are available for controlling emissions of sulfur dioxide and particulate matter from these processes; the smelting processes and emission reduction systems currently in use within the domestic industry; the costs and economic impact associated with the various smelting processes and emission reduction systems that are available; the rationale for the proposed new source performance standards; the environmental effects associated with the possible neutralization of sulfuric acid and the disposition of scrubbing system by-products; and the impact of the standards on energy utilization.

Each of the subsections in Sections 3, 4, 6 and 8 of this document is preceded by summaries in which the major technical, economic or environmental conclusions developed in each subsection are presented. Rather than duplicate these summaries, a brief description of each section follows to serve as a guide to this document.

Various pyrometallurgical and hydrometallurgical extraction processes are reviewed in Section 3. Considerable detail is developed concerning the technology of pyrometallurgical processes as related to the characteristics of the off-gas streams which are discharged by

specific process units. Both those smelting processes in use within the domestic industry and those in use at various foreign installations are examined. In addition, a few of the more promising pyrometallurgical and hydrometallurgical processes under development are reviewed.

Section 4 reviews various emission control systems that are available to control emissions of sulfur dioxide and particulate matter from those pyrometallurgical extraction processes reviewed in Section 3. The limitations and range of applicability associated with each of these emission reduction systems are discussed in depth. Demonstrated emission reduction with regard to emission concentrations released to the atmosphere is identified for each emission control system discussed.

Section 5 presents a survey of domestic and foreign copper, zinc and lead smelters. Smelting processes and emission control systems in use at each of these installations are reviewed. In addition, the modifications currently underway within the domestic industry as of mid-1973 to meet the national ambient air quality standards are summarized.

The economics associated with the various smelting processes reviewed in Section 3 and the various emission reduction systems reviewed in Section 4 are presented in Section 6. The economic profile of the domestic industry is reviewed, and the economic impact of the proposed standards is identified.

Section 7 presents the rationale for the proposed standards. The selection of the affected facilities covered by the standards and

the determination of the emission concentration limits specified in the standards, which reflect best demonstrated technology taking into account costs, are reviewed.

The potential environmental effects associated with the proposed standards are reviewed in Section 8. Considerable detail is developed concerning the neutralization of sulfuric acid and the disposition of various by-products associated with off-gas scrubbing systems discussed in Section 4. The impact of the proposed standards on the energy requirements associated with the production of copper, lead, and zinc is also reviewed. The energy requirements of both the various emission control systems which can be utilized to comply with the standards and the various smelting technologies which can be employed are identified.

2. INTRODUCTION

The purpose of this document is to make available to the public the information and rationale which the Administrator used to develop standards of performance which are being proposed for new and modified primary copper, lead, and zinc smelters. This report describes the various extraction processes available for copper, lead and zinc, the various emission reduction systems available for controlling the emissions of sulfur oxides and particulate matter from these processes, the costs and environmental effects associated with the various processes and control systems, and the rationale for the proposed standards.

Section 111 of the Clean Air Act, as amended, directs the Administrator of the Environmental Protection Agency to establish standards of performance for new stationary sources. The Administrator was required to publish, within 90 days after the date of enactment of the Act, a list of categories of sources which may contribute significantly to air pollution which causes or contributes to the endangerment of public health or welfare; revisions of the list are to be published from time to time. The Administrator must propose regulations within 120 days after the publication of a list, or revision of a list, and afford interested persons an opportunity for written comment on the proposed regulations. After considering these comments, the Administrator is required to promulgate standards, incorporating modifications as he deems appropriate, within 90 days after the date of proposal.

The initial set of Federal new source performance standards (NSPS's) was promulgated on December 23, 1971. Emission standards were established for large fossil-fuel-fired steam generating plants, portland cement manufacturing plants, municipal incinerators, nitric acid manufacturing plants, and sulfuric acid manufacturing plants. The Group II new source performance standards promulgated March 8, 1974, apply to secondary lead smelters, secondary brass and bronze ingot production plants, asphalt concrete manufacturing plants, basic oxygen process furnaces at iron and steel plants, sewage sludge incinerators, storage vessels for petroleum liquids, and specified sources at petroleum refineries.

New source performance standards apply to stationary sources the construction or modification of which is commenced after the publication of proposed regulations which will be applicable to that source category. The Act requires that new source performance standards "... reflect(s) the degree of emission limitation achievable through the application of the best system of emission reduction which (taking into account the cost of achieving such reduction) the Administrator determines has been adequately demonstrated." The "system of emission reduction" may include both the production and emission control equipment, rather than being restricted to the latter alone. Further, it is not necessary for the emission reduction system to have been commercially demonstrated, or demonstrated at full scale.

The proposed standards, which this document describes, apply to primary extraction facilities which use pyrometallurgical techniques to produce copper, zinc, and lead from sulfide ore concentrates. Some of these facilities simultaneously process lesser quantities of scrap

materials, but are distinct from secondary copper, zinc, and lead smelters which do not process ore concentrates.

In developing the proposed standards, EPA engineers surveyed smelting process technology and emission control technology during on-site visits to all domestic primary copper, zinc, and lead smelters. Consultations with smelter operators were held during these visits and in joint EPA/American Mining Congress meetings. The resulting information base, together with that obtained by EPA review of the technical and trade literature, indicated that some foreign smelters operate processes more amenable to air pollution control and employ more effective sulfur dioxide emission control devices than had been demonstrated in the United States at that time. For example, flash copper smelting furnaces have not yet been operated in the United States, and metallurgical double-absorption sulfuric acid plants had not been operated domestically prior to late 1972.

A limited EPA emission testing program was carried out in May and June 1972 to quantify emissions from metallurgical single-absorption sulfuric acid plants. In October 1972 a continuous monitor was installed on a metallurgical single-absorption sulfuric acid plant to record emissions of sulfur dioxide. This monitor operated from October through December 1972, and the data were analyzed to identify the effects of smelting process fluctuations which are peculiar to metallurgical acid plant operation. EPA recognized that these single-absorption plants would be less effective than the double-absorption plants operated abroad, but the need existed for establishing a quantitative data base directly related to domestic smelting processes and methods of operation. A limited

number of tests were also carried out to quantify the performance of smelter particulate control devices.

The fact that control of weak sulfur dioxide emission streams is the most difficult technical problem associated with smelter emission control (for example, emissions from copper reverberatory smelting furnaces and lead sintering machines) indicated that smelting processes which do not generate such effluents should be investigated in detail as one component of best systems of emission reduction. Consequently, EPA engineers inspected smelters in Europe and Japan during August and September 1972 to examine newer smelting techniques. Double-absorption sulfuric acid plants were also inspected, and consultations were held with foreign smelter operators concerning the emission control performance of these plants.

The National Air Pollution Control Techniques Advisory Committee, the Federal Agency Liaison Committee, and the American Mining Congress have reviewed drafts of this document. Numerous comments were received on the drafts, and revisions were made on the basis of these comments.

By the beginning of 1973, it was evident that a number of the newer smelting technologies and emission control systems would be put into operation in the United States in the near future. Information had been released that one new flash copper smelting furnace and one new large-scale electric copper smelting furnace would be constructed. A double-absorption sulfuric acid plant for controlling a copper converter effluent and a dimethylaniline (DMA) scrubbing system for controlling a

copper reverberatory smelting furnace effluent had undergone startup in late 1972. EPA engineers inspected these two installations in March 1973 and made plans to conduct emission tests during the summer. In June 1973, an emission test was carried out by EPA on the double-absorption sulfuric acid plant. This plant easily met the vendor guarantee of 500 ppm SO_2. The DMA scrubbing system has experienced numerous mechanical problems since initial startup in November 1972 and has not to date achieved long-term continuous operation.

In June 1973, EPA installed a continuous monitor on the double-absorption sulfuric acid plant mentioned above. Emissions were recorded through December 1973. The sulfur dioxide emission limit of the proposed standards is based primarily on the results of this test.

Emission control costs were calculated for "model" copper, zinc, and lead smelters which employ a variety of different smelting processes which the Administrator has judged to be adequately demonstrated. Alternative emission control systems, which produce a range of smelter sulfur dioxide emission control levels, were applied to the "model" smelters to provide a basis for taking costs into account in arriving at the proposed emission limitations. Both the cases of sale of sulfur-containing byproducts by smelters and ultimate disposal of these materials by smelters were included as possible occurrences in calculating control costs.

The Administrator recognizes that the environmental effects of preventing large quantities of sulfur-bearing materials from being emitted into the atmosphere by primary copper, zinc, and lead smelters

must be evaluated. Consequently, EPA engineers have estimated the quantities of solid and sludge waste that may result from application of the proposed standards. The properties of these wastes and the effectiveness of available ultimate disposal methods or byproduct use methods in limiting secondary water and air pollution have been investigated. In addition, EPA engineers have estimated the energy requirements associated with the various emission control systems that could be utilized to comply with the proposed standards, and analyzed the impact of the proposed standards on the energy requirements associated with the smelting of copper, lead and zinc.

3. PRIMARY EXTRACTION PROCESSES FOR COPPER, ZINC AND LEAD

3.1 PYROMETALLURGICAL PROCESSES

3.1.1 Copper Smelting

Conventional practice for the production of blister copper (approximately 99 percent pure copper) from copper sulfide ore concentrates includes three operations:

1. Roasting to remove a portion of the concentrate sulfur content.
2. Smelting of the concentrate and fluxes in a furnace to form slag and copper-bearing matte.
3. Oxidizing of the matte in a converter to form blister copper.

A pictorial representation of a copper smelter is presented in Figure 3-1, and a general summary of the copper smelting technology currently in use within the United States identifying the contribution of each type of smelting unit operation to total SO_2 emissions is presented in Figure 3-2. Of the fifteen existing domestic primary copper smelters, seven perform the above three operations, while the remaining eight feed concentrates (green-feed) directly to the reverberatory furnaces without a prior roasting step.

Both multiple-hearth roasters and the more recently developed fluid-bed roasters (1961) (Figure 3-3) are in use at domestic copper smelters. Roasting, at those smelting facilities which employ this process, normally contributes from 20 to 50 percent of the total quantity of SO_2 generated by such smelters.[1] Effluent

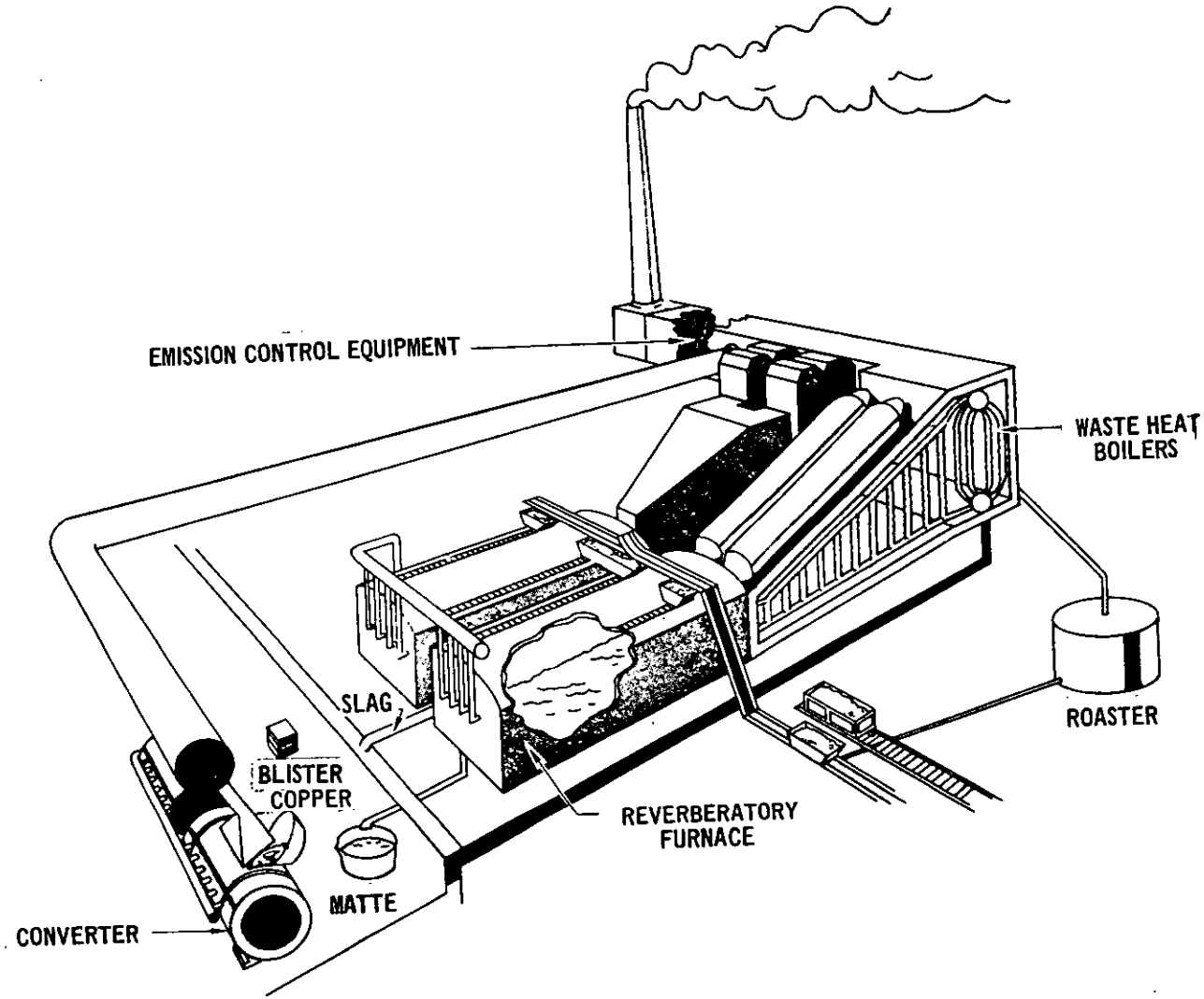

Figure 3-1 Copper smelter.[2]

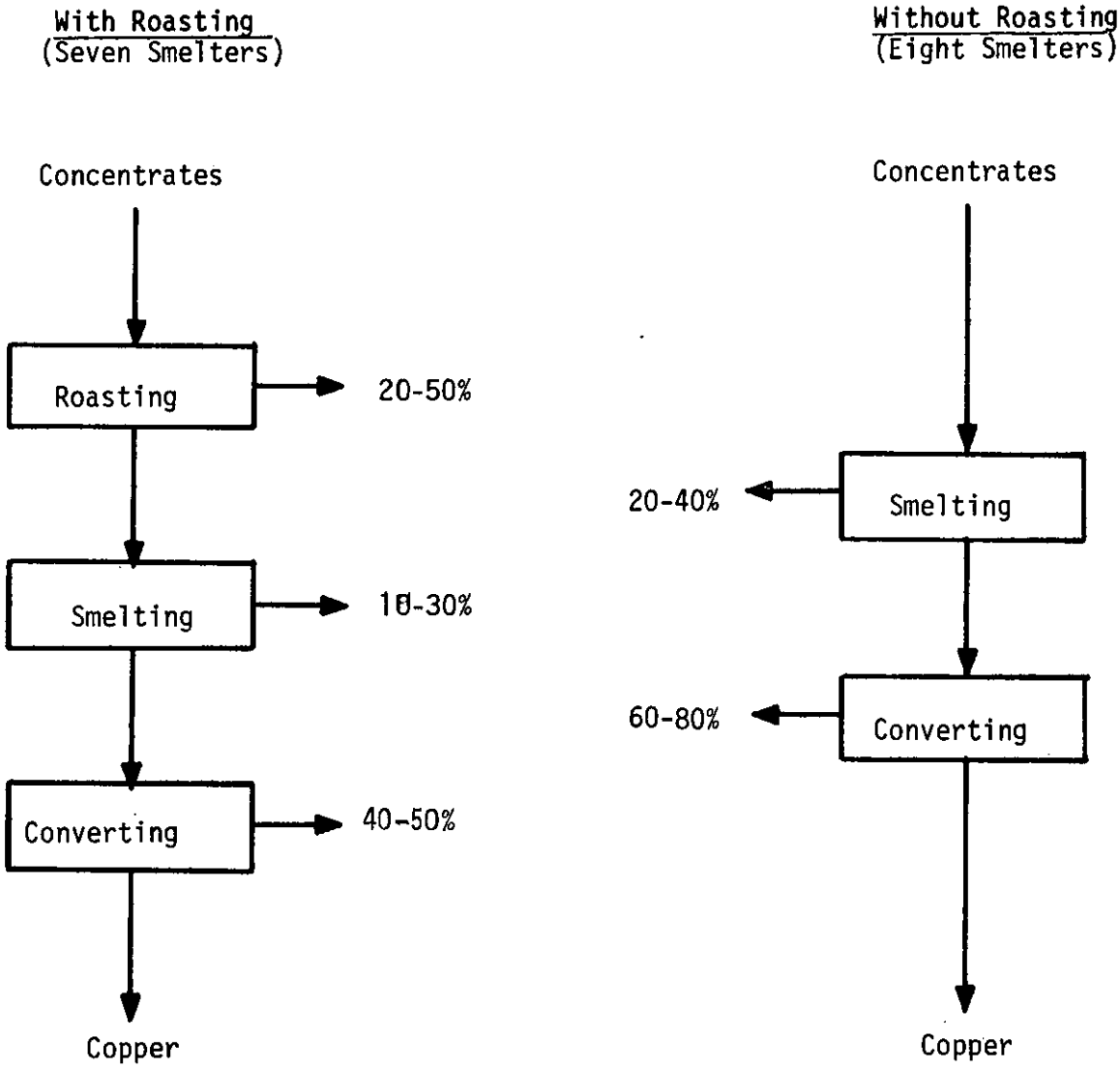

Figure 3-2 Domestic copper smelting technology
-sulfur dioxide emissions breakdown-

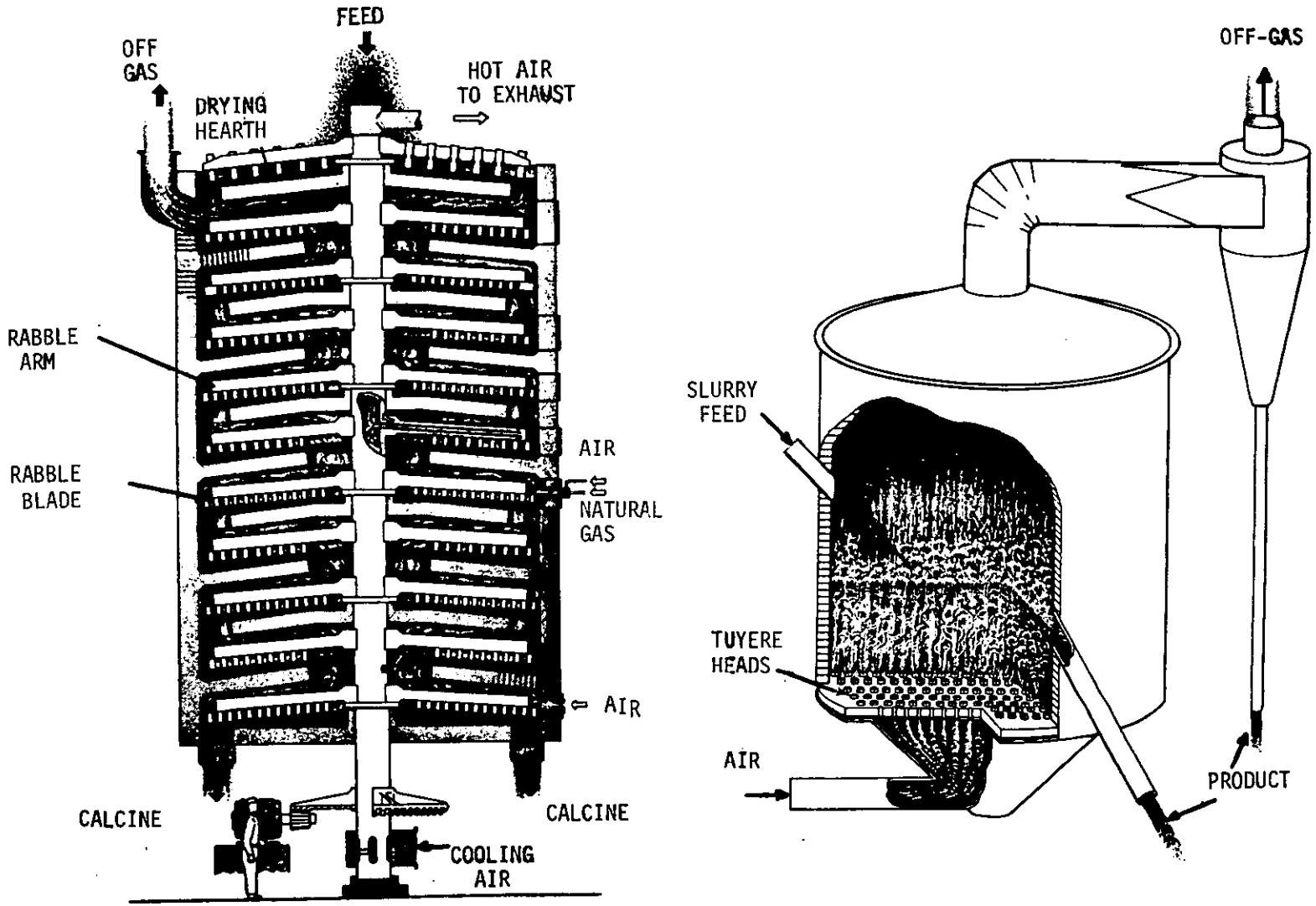

Multi-hearth roaster

Fluid-bed roaster

Figure 3-3. Types of roasters.[2]

streams from multiple-hearth roasters typically contain 5 to 10 percent SO_2 prior to air dilution to effect cooling, whereas fluid-bed roasters typically produce effluents with 12 to 14 percent SO_2.[3]

All currently operating U. S. copper smelters, with the exception of one which has recently installed an electric furnace, use fossil-fuel-fired reverberatory furnaces (Figure 3-4) to smelt the copper concentrate, fluxes, and copper-bearing slag recycled from the converter. The molten copper sulfides and iron sulfides settle to the bottom of the furnace to form matte which contains from 25 to 50 percent copper and 40 to 20 percent iron; this matte is periodically tapped from the furnace and charged into a converter. Iron oxides combine with the fluxes to form a slag which floats on top of the furnace matte and which is also periodically extracted from the furnace. The effluent from the reverberatory furnace normally contributes from 10 to 40 percent of the total quantity of SO_2 emissions generated by individual domestic copper smelters; the larger percentages correspond to smelters which omit the roasting operation prior to smelting.[1] The concentration of SO_2 in reverberatory furnace off-gases typically ranges from 1/2 to 2-1/2 percent.[4]

Batches of reverberatory furnace matte are charged into Pierce-Smith converters, which are currently the only type of converter in use at domestic copper smelters. Air, which is blown into tuyeres located at the side of the converter, passes upward through the matte and flux to convert iron sulfides into iron oxides and release SO_2. The iron oxides combine with the silica fluxes to form

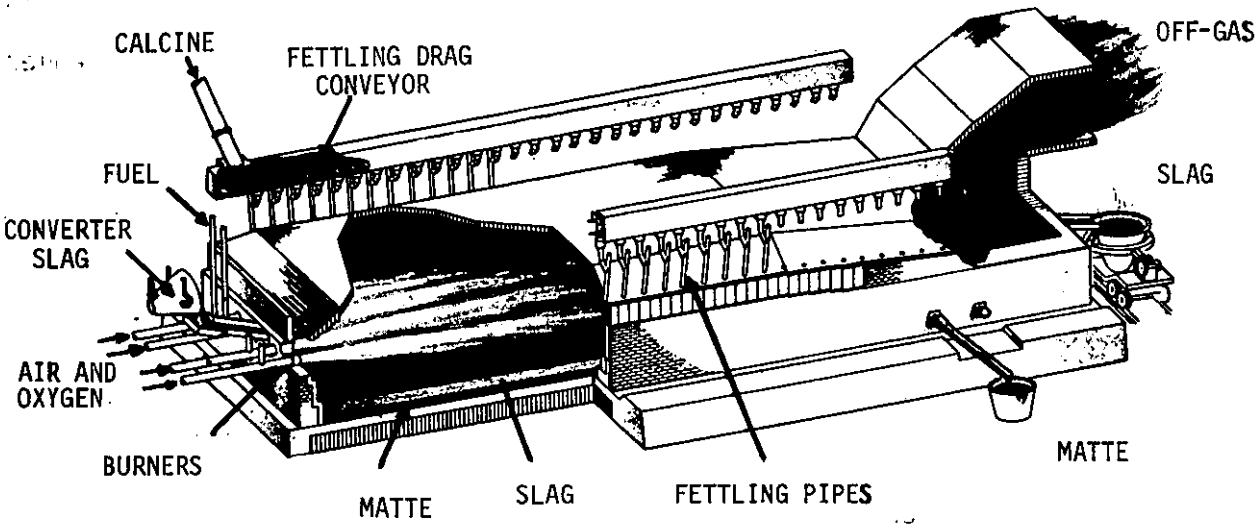

Figure 3-4. Reverberatory smelting furnace.[2]

slag, and the SO_2 is contained in the effluent collected by the converter hooding system. Periodically, the air blowing is interrupted to permit slag to be poured from the converter and additional fluxes and matte to be charged. The initial operation of the converter, which transforms iron sulfides to iron oxides, yielding a charge of copper sulfide, is termed the "first stage blow" or "slag blow." The second stage "white metal blow," or "copper blow," of the converter transforms copper sulfides into blister copper and releases SO_2. Figure 3-5 illustrates the sequence of converting operations which typically require 8 to 10 hours for a complete cycle to produce blister copper from copper matte.

Copper converting normally accounts for 40 to 80 percent of total SO_2 emissions at individual domestic copper smelters.[1] The concentration of SO_2 in converter off-gases varies greatly during the cycle of converter operation. Fugitive quantities of SO_2 are emitted during converter charging and slagging and during copper pouring. Theoretically, 15 percent SO_2 is attained at the converter mouth during "slag blowing" and 21 percent SO_2 during "copper blowing." However, the infiltration of large volumes of air into the hooding at the converter mouth and into flues limits the concentrations of SO_2 which can practically be attained in converter effluents. Consequently, converter off-gases are normally in the range of 3 to 10 percent SO_2 during various blowing stages and average 3 to 7 percent SO_2 depending on the amount of air infiltration.[5]

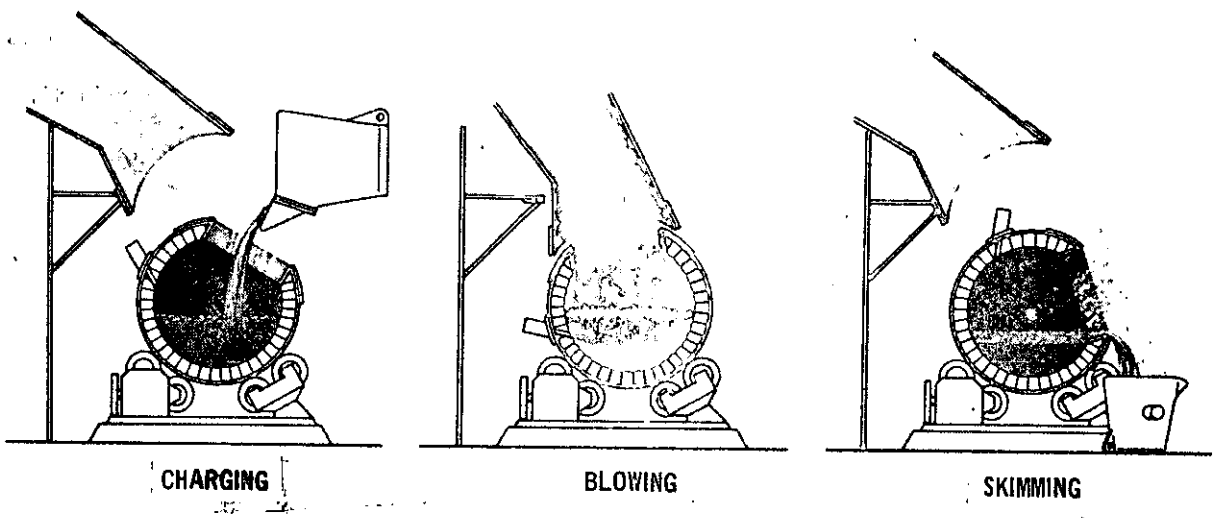

Figure 3-5 Copper converting operation.[2]

In addition to the installation of sulfuric acid plants, elemental sulfur plants, or possibly the use of various off-gas scrubbing systems to either recover sulfur dioxide for further processing or to produce a sulfur compound to be sold or discarded, there are a number of process alternatives that can be used to make the basic pyrometallurgical copper smelting process more amenable to air pollution control. The intent of the following discussions will be to highlight several of these major alternatives, including:

1. The use of fluid-bed roasters before reverberatory smelting furnaces,
2. The use of oxygen-enriched air in "green charge" (no pre-roasting) reverberatory smelting furnaces,
3. The use of electric smelting furnaces rather than reverberatory smelting furnaces,
4. The use of flash smelting furnaces rather than reverberatory smelting furnaces,
5. The use of Hoboken copper converters rather than Pierce-Smith copper converters or the use of tight-fitting hood systems on Pierce-Smith converters,

and, in the near future,

6. The use of continuous copper smelting technology presently under development.

Further, the requirements for blending of effluents from roasters, reverberatory smelting furnaces, and converters to produce a combined strong sulfur dioxide stream are discussed.

3.1.1.1 Roasting

Summary —

Roasting can be used to remove a major portion of the sulfur in copper concentrates. Currently within the domestic copper smelting industry, roasters eliminate from 20-50% of the sulfur contained in the concentrates. Roasters discharge off-gas streams of uniform, steady flow rate, containing high concentrations of sulfur dioxide. Multi-hearth roasters discharge off-gases containing 5-10% sulfur dioxide, and fluid-bed roasters discharge off-gases containing 12-14% sulfur dioxide.

"Deep-roasting" to remove 50-70% of the sulfur contained in the concentrates would involve major operational changes in conventional domestic smelting practice. Although technically feasible with some concentrates, the operational changes required may be such that "deep-roasting" would be economically feasible only in certain specific cases.

"Dead-roasting" to eliminate all the sulfur contained in the concentrates is discussed in Section 3.1.1.2 - Electric Smelting.

"Sulfate-roasting" to produce copper by the Roast-Leach-Electrowin (RLE) process can be utilized to extract copper from copper sulfide concentrates. Emissions of sulfur oxides are confined to the roasting operation and are discharged in an off-gas stream containing 4-8% sulfur dioxide. The RLE process, however, does have certain limitations and may not be economically feasible for treatment of all copper sulfide concentrates, particularly those containing high levels of precious metals or high levels of various metallic impurities.

General discussion --

The roasting of copper sulfide ore concentrates is basically a process in which the concentrates are heated in air, which may be oxygen enriched, to the temperature necessary for some of the sulfide sulfur to combine with oxygen to form sulfur oxides and for some of the sulfide metals to form metal oxides. The degree of sulfur removal from the concentrates depends on the volume of air supplied to the roaster per unit of concentrates charged. Consequently, essentially all (dead roasting) or only a portion (partial roasting) of the sulfur contained in the ore concentrates can be removed as sulfur oxides.[3] However, domestic copper smelting techniques are based on the ability of molten silica fluxes to combine with metal oxides, but not metal sulfides, forming a slag. Thus sufficient sulfur must remain in the concentrates after roasting to insure that the copper present will form a copper sulfide matte in subsequent processing operations. Since the conversion of iron sulfides to iron oxides occurs preferentially to the conversion of copper sulfides to copper oxides, it is possible to recover copper from copper/iron sulfide ore concentrates.

This is not to imply, however, that "dead roasting" of copper concentrates cannot be used to produce copper. The Montanwerke Brixlegg copper smelter in Austria practices "dead roasting" of copper concentrates followed by the production of "black copper," through the use of coke as a reductant in an electric furnace.[6] A copper smelter in Northern Rhodesia is reported to practice "dead roasting" of copper concentrates followed by production of copper sulfide matte in an electric furnace. This is accomplished through the

addition of virgin unroasted sulfide concentrates to the electric furnace, thus providing sulfide sulfur to reduce the copper oxides to copper sulfides.[7]

Copper concentrates can be roasted either in multi-hearth or fluid-bed roasting furnaces (Figure 3-6). The basic design of a multi-hearth roaster results in a relatively long contact time for roasting a unit of concentrate; thus multi-hearth units generally have low throughput rates compared with fluid-bed units. The turbulent bed in a fluid-bed roaster, however, results in extremely intimate contact between the concentrates and the oxidizing environment, as compared with a multi-hearth roaster. As a result, fluid-bed roasters tend to produce roasted concentrates (calcines) of higher magnetite content than multi-hearth roasters. Magnetite (Fe_3O_4) is much less desirable than ferric oxide (Fe_2O_3) and can lead to problems in smelting furnaces, such as slags of high copper content, reduced smelting rate and furnace bottom build-up.

The off-gases from multi-hearth roasters contain in the range of 5-10% sulfur dioxide depending mainly on the degree of oxygen utilization and air infiltration.[3,4] The off-gases from fluid-bed roasters, however, contain in the range of 12-14% sulfur dioxide.[3,4] Consequently, off-gases from fluid-bed roasters and, in some cases, those from multi-hearth roasters frequently do not contain sufficient oxygen if the off-gases are to be used for the manufacture of sulfuric acid. This oxygen deficiency is easily corrected, however, by additional air infiltration or by blending with off-gases from other smelter operations containing lower concentrations of sulfur dioxide and higher concentrations of oxygen.

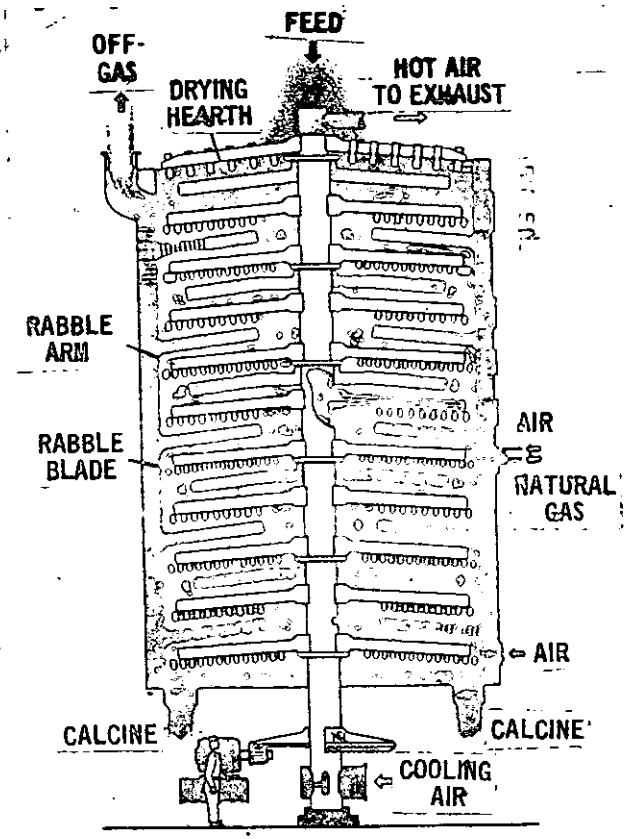

Multi-hearth roaster

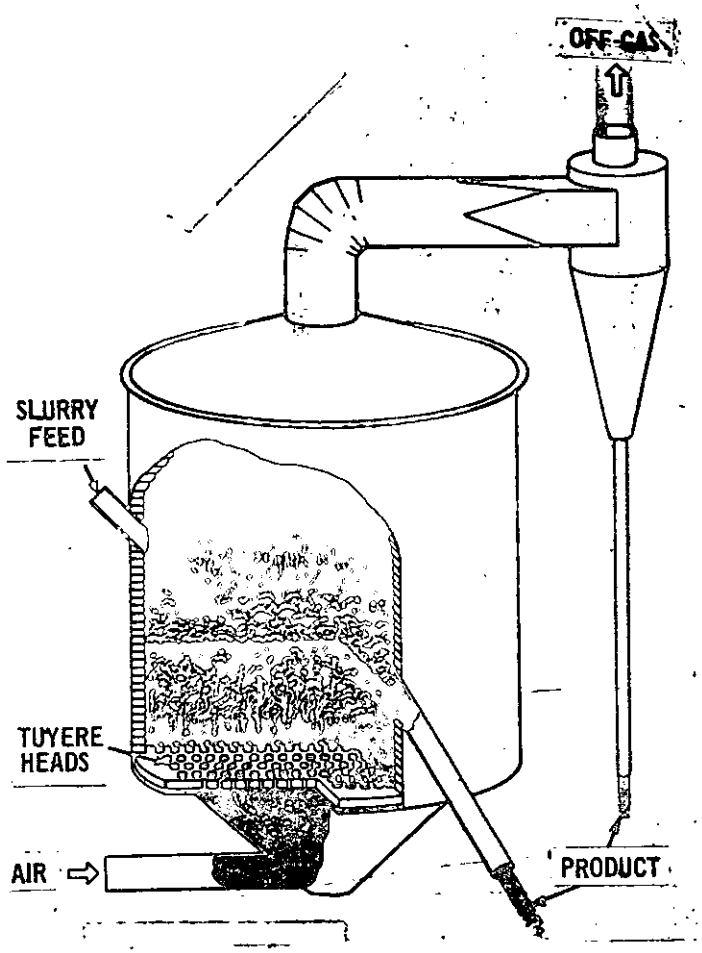

Fluid-bed roaster

Figure 3-6 Types of roasters.[2]

In terms of uniformity of flow rate and sulfur dioxide concentration, roaster off-gases are close to ideal for the manufacture of sulfuric acid or elemental sulfur. There is little variation in either flow rate or sulfur dioxide concentration and this permits sulfuric acid plants or elemental sulfur plants to operate at maximum efficiencies. However, with regard to the quality of sulfuric acid or elemental sulfur produced, fluid-bed roasters are generally superior to multi-hearth roasters. Frequently, within multi-hearth roasters, various organic agents entrained with the concentrates following flotation separation of the concentrates from raw ores are merely vaporized or only partially decomposed in the roaster. Trace quantities of these agents oftentimes pass through gas cleaning equipment and are captured in the product sulfuric acid or elemental sulfur, leading to the production of dark, discolored, off-grade acid or sulfur. Normally within fluid-bed roasters, these organic flotation agents are completely decomposed and thus sulfuric acid or elemental sulfur produced from the off-gases is free of these contaminants. Although there are techniques which can be used to decolorize or bleach acid or sulfur, these are usually costly and sometimes not entirely satisfactory. However, there are outlets for sulfuric acid or elemental sulfur which are not sensitive to color of the acid or sulfur, such as the production of fertilizers.

The presence of high levels of volatile metals, such as arsenic, antimony and mercury, etc., in the concentrates can present difficulties in the production of sulfuric acid or elemental sulfur from both

multi-hearth or fluid-bed roaster off-gases. In most cases, however, these difficulties can be resolved through the installation of adequate gas scrubbing and cleaning equipment prior to the sulfuric acid or elemental sulfur plant. This aspect is fully discussed in Sections 4.1 (Sulfuric Acid Plants) and 4.2 (Elemental Sulfur Plants) of this report.

Currently within the domestic copper smelting industry, seven of the fifteen smelters operate roasters. Four operate the multi-hearth type and three operate the fluid-bed type. At these installations, from 20-50% of the sulfur contained in the copper ore concentrates is removed as sulfur oxides in the roasting operation, depending primarily on the copper content of the concentrates processed and the copper sulfide content of the copper matte that the operators desire to produce in the reverberatory smelting furnaces.[4] It is likely, however, in some cases that the degree of sulfur removal in the roasting operation could be increased significantly, possibly to 50-70% of the sulfur contained in the copper concentrates ("deep roasting"), thus shifting a major portion of the sulfur normally removed in the copper converters and reverberatory furnace to the roaster.[3,8,9] As mentioned earlier, only enough sulfur need remain in the concentrates to insure that the copper will form a copper sulfide matte in subsequent processing operations. Thus, sulfur in excess of this amount could be eliminated by roasting.

Operation in this manner, however, would increase the grade (copper content) of matte produced in the reverberatory furnaces from 30-40%, which is typical of domestic operations, to 50-65%, which is typical of some foreign operations using flash smelting furnaces.[10,11] As a result, a number of operational changes would undoubtedly have to be incorporated into conventional domestic

smelting techniques to accommodate "deep roasting." The use of separate slag treatment facilities to recover copper from both reverberatory slags and converter slags is one example. With an increase in the grade of matte in a reverberatory furnace, the equilibrium concentrations of copper in the slag would increase, leading to increased copper losses if the slag were not treated. Furthermore, as a result of "deep roasting," the magnetite burden on the reverberatory furnace would increase. To reduce the magnetite content within the furnace to tolerable levels, reverberatory slag would likely have to be tapped from the slag/matte interface, where magnetite tends to accumulate, rather than from near the top of the slag layer, as is conventional practice. This change in slag tapping location would also increase the copper content of the reverberatory slag, further necessitating slag treatment facilities to control copper losses. With the probable necessity to install slag treatment facilities to treat reverberatory slags established, it is likely that converter slags would also be treated directly by these facilities rather than returned to the reverberatory furnace. Only a small incremental increase in slag treatment capacity would be necessary, while the magnetite burden on the furnace would be reduced further with a significant increase in smelting capacity resulting.

If the concentrate contains high levels of impurities, such as arsenic, antimony, and bismuth, etc., increased fire refining of the blister copper produced in the converters and changes in the electrolytic refining circuit might also be necessary, as discussed in Section 3.1.1.5 (Copper Refining). With low-grade mattes,

converters are quite efficient in eliminating a number of impurities frequently associated with copper concentrates. Increased matte grade, however, leads to decreased converter blowing time and lower converter temperatures which, in turn, tends to result in decreased impurity elimination.[12]

Consequently, "deep-roasting" to remove 50-70% of the sulfur contained in the concentrates would likely require major operational changes in domestic smelting techniques. Furthermore, "deep-roasting" would only be technically feasible in limited cases involving concentrates with substantial "excess" sulfur and would undoubtedly be economically feasible only in certain specific instances.

However, the use of roasters is not restricted to copper extraction techniques based on the formation of copper sulfide mattes. Other extraction techniques which have been developed utilize roasters to eliminate the sulfide sulfur either by complete conversion to sulfur oxides ("dead roasting"), or by conversion to sulfates and sulfur oxides ("sulfate roasting").

The Brixlegg process, as mentioned previously, utilizes "dead roasting" of copper sulfide concentrates in a fluid-bed roaster.[6] This process, which also utilizes an electric furnace, is discussed fully in Section 3.1.1.2 (Electric Smelting).

The Roast-Leach-Electrowinning (RLE) process, developed separately by the Roan Selection Trust Group and by Bagdad Copper Corporation, utilizes "sulfate roasting" of copper sulfide concentrates.[12,13,14] In this process, copper sulfides are converted selectively to copper sulfates, iron is converted to ferric oxide, and sulfide sulfur in

excess of that necessary to form copper sulfate is converted to sulfur oxides in a fluid-bed roaster. The copper sulfate/ferric oxide calcine from the roaster is then contacted with a sulfuric acid leach solution. Both copper sulfate and ferric oxide are extracted into solution; however, the ferric oxide rapidly hydrolyzes to ferric hydroxide which is insoluble and precipitates from solution. Consequently, the copper is selectively extracted from the calcine, leaving a residue of ferric hydroxide and insoluble gangue material.[13]

The copper sulfate/sulfuric acid solution is separated from the residue, purified in a series of filtration steps to eliminate suspended insoluble material, and then introduced into electrolytic cells for the recovery of copper by electrowinning. Copper ions are reduced to free copper metal which electroplates from the solution onto the copper cathodes as in conventional electrolytic refining. As the copper is recovered from the leach solution, sulfuric acid is formed. Thus, the sulfide sulfur converted to sulfates in the roasting operation is ultimately converted to sulfuric acid in this process.[13]

Mufulira Copper Mines Ltd., which is associated with the Roan Selection Trust Group, currently uses the RLE process at its Chambishi copper smelter in Zambia. The smelter was commissioned in 1965 and processes ∿200 tons/day of copper sulfide concentrates.[13] The off-gases from the fluid-bed roaster are vented directly to the atmosphere via a tall stack, following scrubbing of the gases with sulfuric acid leach solution to recover calcines carried over from the roaster. The concentration of both sulfur dioxide and oxygen in the off-gases is in the range of 4-5%.[13] Consequently, the off-gases could be utilized for the production of sulfuric acid, thereby permitting a high degree

of control over emissions of sulfur oxides to the atmosphere.

There are, however, indications in the technical literature that operation of a fluid-bed roaster to obtain both maximum selectivity and conversion of copper sulfides to copper sulfates, leads to conditions producing an off-gas effluent containing 8% sulfur dioxide and 4% oxygen.[16] Thus, it appears that if the Chambishi operation were optimized with respect to conversion of copper sulfides to copper sulfates, the concentration of sulfur dioxide in the off-gases could probably be increased significantly. This would tend to make the process more amenable to air pollution control by reducing the volume of effluent treated to control sulfur oxide emissions.

The RLE process, however, does have certain limitations. Presently, the Chambishi smelter produces copper cathodes containing generally unacceptably high levels of impurities.[13] Although the impurity levels are within ASTM specifications for electrolytic copper, they exceed the Roan Selective Trust Group internal standards for wirebars and it is likely that they exceed similar impurity standards within the domestic industry. The literature reveals, however, that the sulfuric acid leach/electrolyte solution, which serves as the leach solution for the copper extraction operation and also as the electrolyte in the electrowinning operation, contains extremely high levels of impurities.[13] No mention of purification facilities for removal of dissolved impurities from this solution is made in the literature, and it appears that such facilities do not exist at the smelter.

Rather, it appears that,with the necessity of operating a large purge stream from the electrowinning circuit established to prevent the accumulation of sulfates, this purge stream is also utilized to prevent the accumulation of impurities within the electrolyte circuit. However, although this may prevent the accumulation of impurities, it permits a generally high level of impurities to be attained and maintained in the electrolyte solution.

Purification facilities for removal of dissolved metallic impurities from electrolyte solutions are normally an integral part of any electrolytic refining installation within the domestic industry. The installation of such facilities at the Chambishi smelter would undoubtedly reduce the impurity levels in the cathode copper considerably, perhaps reducing them to acceptable levels. (Electrolyte purification facilities are discussed in Section 3.1.1.5, Copper Refining,)

Copper solvent extraction techniques utilizing liquid-ion-exchange reagents developed by General Mills, Inc., could also be utilized at the Chambishi smelter to reduce the impurity levels in cathode copper. These liquid-ion-exchange reagents, under the General Mills trade name of LIX reagents, can extract copper ions from low-strength sulfuric acid solutions with a high degree of selectivity. The copper is recovered from the LIX reagent by solvent extraction with a strong sulfuric acid solution.[17,18,19]

These reagents could be used to extract copper from the sulfuric acid leach solution at Chambishi, leaving essentially all of the contaminating impurities in the leach solution. The leach solution could be recycled to extract copper from the copper sulfate/ferric oxide

calcine, which is currently done at Chambishi with the sulfuric acid leach/electrolyte solution. A large purge stream would still have to be removed from the leach solution to prevent the accumulation of sulfates, and this would serve to prevent the accumulation of impurities in the leach solution.

A strong sulfuric acid electrolyte solution from the copper refining circuit could be utilized to extract copper from the LIX reagent. The regenerated LIX reagent could then be recycled and contacted with fresh leach solution to extract more copper. The copper-sulfuric acid electrolyte solution could be processed in electrolytic refining facilities to produce cathode copper.

Consequently, the installation of LIX solvent extraction facilities at Chambishi would minimize the impurity levels in the copper electrolytic refining circuit, leading to a substantial reduction in the impurity levels of the cathode copper produced. Without a doubt, this would permit the production of cathode copper of good quality.

The most serious limitation of the RLE process, however, when compared to conventional copper sulfide matte smelting processes, is the likely inability of the process to recover precious metals contained in copper sulfide concentrates, such as gold, silver, and palladium. Although the technical literature released by the Roan Selection Trust Group concerning this process does not address this aspect, a review of the technical literature on copper hydrometallurgical processes, hydrometallurgy in general, and leaching in general indicates that the sulfuric leach operation will most likely not extract precious metals into solution to any significant degree. Consequently, economic considerations will likely dictate the use of

conventional copper sulfide matte smelting techniques over the use of RLE technology for processing copper sulfide concentrates containing sufficient levels of precious metals to warrant their recovery.

It appears, however, that these limitations are not serious enough to prevent further development and application of the RLE process. Although a great deal of publicity has been given to the recent announcements by Phelps Dodge of plans to construct a flash smelter at Tyrone, New Mexico, and by Anaconda of plans to construct a hydrometallurgical processing plant at Anaconda, Montana, little publicity has been given to the recent announcement by Hecla - El Paso Natural Gas of plans to construct a copper smelter at their Lakeshore mining properties in Arizona, utilizing the RLE process.[15] The smelter will process 400 tons/day of copper sulfide concentrates and is scheduled for completion during late 1974. Thus, the smelter should be in startup by early 1975. Sulfur oxide emissions from the fluid-bed roaster will be controlled by a 250-tons/day single-stage sulfuric acid plant.[15,20] The RLE technology and "know-how" for the installation is being provided primarily by Bagdad Copper Corporation, based on data and information generated during their extensive pilot-plant program of development and testing of the process in the mid-1950's. At that time Bagdad Copper had under consideration an RLE copper smelter; however, although the pilot-plant program indicated commercial feasibility of the process, the small capacity of the installation being considered made the project economically unattractive.

3.1.1.2 Smelting furnaces

The smelting of copper sulfide ore concentrates is basically a process in which the concentrates are heated to their melting point to separate copper sulfides and other valuable metals from the bulk of the unwanted constituents in crude form. As briefly discussed earlier, the aim is to produce a copper sulfide matte containing the desired constituents. Frequently, the first step in separating the iron from the copper is to oxidize the iron by roasting, while retaining the copper as sulfide. However, molten iron oxide and copper sulfide are miscible over a wide range of compositions so that oxidation of the iron alone will not yield the desired separation, but if silica is present, the iron oxide combines with it to form a liquid iron silicate slag. This silicate phase is essentially immiscible with the sulfide phase, and the melt separates into two layers with the lighter slag layer floating on top of the matte layer.

The energy necessary to smelt the copper ore concentrates and limestone/silica fluxes can be provided in a number of ways, such as:

(1) the use of fossil fuel combustion in a reverberatory furnace,

(2) the use of electrical power in an electric furnace,

or (3) the use of the heat of reaction from the oxidation of iron sulfide to iron oxide in a flash furnace.

Reverberatory furnaces--

Summary--The emission of large volumes of off-gases containing low concentrations of sulfur oxides is inherent in the basic design of reverberatory smelting furnaces, since the heat for smelting is provided by the combustion of large volumes of fuel and air.

The roasting of copper concentrates prior to charging to the furnace, the use of "bath" smelting rather than "sidewall" smelting, and the treatment of converter slags in separate slag treatment facilities rather than returning them to the smelting furnace will minimize sulfur dioxide emissions per unit of furnace charge from reverberatory smelting furnaces. "Deep-roasting," as discussed in Section 3.1.1.1, could be utilized in some cases to remove 50-70% of the sulfur contained in the concentrates, reducing emissions from the furnace to the level of 5-10% of the sulfur contained in the concentrates processed by the smelter. Currently within the domestic industry, emissions from reverberatory furnaces range from 10-40% of the sulfur contained in the concentrates. However, as also discussed in Section 3.1.1.1, "deep-roasting" would require major operational changes in conventional domestic smelting practice, would be applicable only to specific copper concentrates, and would most likely be economically feasible only in certain specific cases.

The concentration of sulfur oxide emissions from reverberatory furnaces can be increased significantly through the use of oxygen enrichment of the combustion air. Enrichment of combustion air to 28-40% oxygen increases the concentration of sulfur dioxide in the furnace off-gases to 3-1/2 to 5%.

The use of oxygen lances within reverberatory smelting furnaces, although shown in laboratory pilot plants to increase sulfur dioxide concentrations in the furnace off-gases to 12-18%, requires further development and is not commercially demonstrated.

General discussion--In a reverberatory furnace (Figure 3-7), a fossil fuel such as oil or natural gas is burned above the copper concentrates

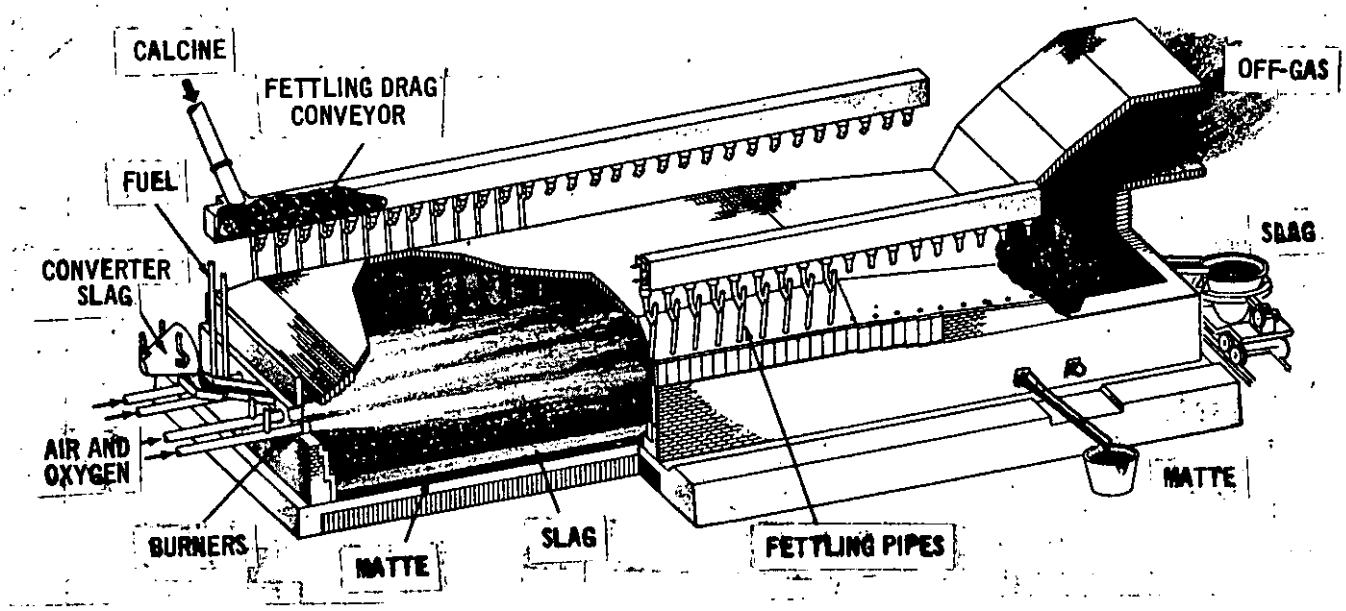

Figure 3-7 Reverberatory smelting furnace.[2]

being smelted. The furnace is a long rectangular structure with an arched roof and burners at one end. Flames from the burners may extend half the length of the furnace. Part of the heat in the combustion gas radiates directly to the charge lying on the hearth below, while a substantial part radiates to the furnace roofs and walls and is reflected down to the charge.

In addition to smelting the copper concentrates, a major function of a conventional reverberatory furnace is to recover copper--both chemically and mechanically--from slag produced in the copper converters. Molten converter slag is returned to the furnace, and copper sulfide matte and copper that is mechanically entrained in this slag settles out by gravity. To some extent, copper oxides trapped in the slag are converted to copper sulfides by reduction with iron sulfides and also settle out.

During the smelting of copper concentrates as practiced in reverberatory furnaces within the domestic copper smelting industry, from 10-40% of the sulfur contained in the concentrates processed by the copper smelter is eliminated as sulfur oxides.[1] Roasting tends to reduce sulfur elimination in reverberatory furnaces, however, and "calcine-charge" furnaces (those with pre-roasting operations) normally eliminate only 10-30% of the sulfur contained in the concentrates processed by the smelter, while "green-charge" furnaces (those with no pre-roasting operation) normally eliminate 20-40% of the sulfur. Emissions of sulfur oxides from reverberatory furnaces are primarily a result of thermal decomposition of metal sulfides in the concentrates and, to a minor extent, the reduction of magnetite (Fe_3O_4), contained in converter slags and roasted concentrates, to iron oxide (FeO).[21,22]

The concentration of sulfur dioxide in the effluent from reverberatory furnaces is typically in the range of 1/2 to 2-1/2%.[4] Major factors influencing the level of sulfur oxide emissions include mineralogy of the concentrates (amount of pyritic sulfur present - FeS_2 and $CuFeS_2$), type of charge (roasted or unroasted) as mentioned above, method of smelting (sidewall or bath), treatment of converter slags, and the degree of air infiltration.[12,21] If concentrates containing a significant amount of pyritic sulfur are smelted in a "green-charge" furnace (no pre-roasting operation), emissions from the furnace will be greater than if concentrates essentially free of pyritic sulfur are smelted, or if the concentrates are first roasted rather than charged directly to the furnace. Roasting operations promote the thermal decomposition of pyritic sulfur compounds to release what is termed "free" pyritic sulfur as follows:[21]

$$FeS_2 \rightarrow FeS + S$$

$$CuFeS_2 \rightarrow CuFeS + S$$

Furthermore, as mentioned in Section 3.1.1.1, roasting favors the oxidization of iron sulfides to iron oxides

$$4FeS + 7O_2 \rightarrow 2Fe_2O_3 + 4SO_2$$

over the oxidation of other metal sulfides to metal oxides. Thus, roasting results in less thermal decomposition of the concentrates in a reverberatory furnace per unit of charge to the furnace.

The method of smelting in a reverberatory furnace also influences sulfur oxide emissions to some extent.[22] If the charge is pneumatically dispersed onto the molten bath existing in the furnace (bath smelting), rather than deposited in piles along the furnace sidewalls (sidewall smelting), the smelting rate is increased. Higher smelting rates result

in a lower residence time in the furnace for a unit of charge before the charge is smelted and, as a result, less thermal decomposition of the unsmelted charge occurs.[22] Consequently, emissions are reduced per unit of charge.

The treatment of converter slags in separate slag treatment facilities also reduces, to some extent, sulfur dioxide emissions from reverberatory smelting furnaces per unit of charge. As mentioned earlier, converter slags are normally returned to reverberatory furnaces to recover copper contained in the slags. However, these slags typically contain about 25% magnetite (Fe_3O_4), although magnetite levels as high as 45% have been reported in the literature.[23,24] In the reverberatory furnace a major portion of the magnetite in the converter slags is reduced with the release of sulfur dioxide according to:

$$3Fe_3O_4 + FeS + 5SiO_2 \rightarrow 5(FeO)_2 \cdot SiO_2 + SO_2$$

Consequently, treating converter slags in separate slag treatment facilities to recover copper, rather than returning them to the reverberatory furnace, leads to a reduction of sulfur dioxide emissions per unit of charge.

Although in many cases there is considerable air infiltration into a typical reverberatory furnace and associated flue-gas ductwork, this is not the principal reason for the low concentration emissions of sulfur dioxide. Since the heat for smelting is provided by combustion of large amounts of fuel, substantial quantities of combustion air must be provided. For example, ten to twelve volumes of air are necessary to combust efficiently one volume of natural gas. Consequently, the basic design of a reverberatory smelting furnace tends to result in the production of large volumes of off-gases containing low concentrations of sulfur dioxide.

This is not to imply, however, that nothing can be done to make reverberatory furnaces more amenable to air pollution control. As discussed in the previous section reviewing roasting operations, it is likely that in some cases the degree of sulfur removal in the roasting operation could be increased significantly, possibly to 50-70% of the sulfur contained in the concentrates. Although this would require major changes in normal domestic smelting and refining practice (refer to Section 3.1.1.1 - Roasting), the level of emissions of sulfur oxides from the reverberatory furnace would be reduced substantially. Thus, the percentage of sulfur contained in the concentrates processed by the smelter and discharged in the effluent from the reverberatory furnace would probably be in the range of 5-10% rather than 10-40%.[5,22]

On the other hand, rather than attempting to reduce the level of sulfur dioxide emissions from the reverberatory furnace to a minimum, various techniques can be employed to increase the concentration of sulfur dioxide emissions. As discussed in Sections 4.1, 4.2 and 4.3, although technical considerations normally do not limit the applicability of air pollution control systems to gas streams containing low concentrations of sulfur dioxide, economic considerations frequently do. Thus, increasing the concentration of sulfur dioxide in the off-gases should make the reverberatory furnace more amenable to air pollution control. Increasing sulfur dioxide emissions from reverberatory furnaces would entail the use of tonnage oxygen in the furnace to reduce fuel and combustion air requirements and the reduction of air infiltration to a minimum.

Sealing the furnace and flue-gas ductwork against air infiltration to a much greater extent than is common in the domestic industry at present would require the use of roasters or driers to insure that the

moisture content of the charge to the furnace would be no greater than 5-7%.[25] This would minimize eruptions or explosions in the furnace as a result of the rapid or essentially instantaneous vaporization of water, which can occur if the moisture content of the charge is high. These eruptions tend to promote the formation of cracks and leaks in the furnace roof and sidewalls and throughout the flue-gas ductwork, permitting air infiltration. The use of driers to reduce the moisture content of the charge further, to 1/2% or less, would be beneficial as this would minimize dilution of the sulfur oxides in the furnace off-gases due to water vapor.

The use of tonnage oxygen to enrich combustion air is rapidly gaining widespread use, particularly in the secondary smelting of nonferrous metals. A major parameter determining the capacity of a reverberatory smelting furnace is the volume of combustion gases. Since nitrogen comprises four-fifths of the combustion air normally supplied, enrichment of the air with oxygen lowers the total volume of gas in the furnace, thus producing higher flame temperatures and increasing the smelting capacity. This is significant in that four tons of nitrogen carry away enough heat to smelt a ton of charge.[12] With the decrease in the volume of off-gases per unit of charge to the furnace, the concentration of sulfur dioxide increases, and it should not be difficult to achieve concentrations of sulfur dioxide in the off-gases in the range of 3-1/2 to 5%.[26,27,28]

Oxygen enrichment is currently employed by the International Nickel Co. Ltd. (INCO) at their Sudbury, Ontario, facilities in Canada. This operation, however, is on an intermittent basis with surplus dump oxygen that becomes available to enhance smelting in nickel reverberatory furnaces.[29] As a

result, little information is available concerning the concentration of sulfur dioxide in the off-gases. Until recently, oxygen enrichment of the combustion air in a reverberatory smelting furnace was also practiced at the Onahama Smelting and Refining Co. copper smelter at Onahama, Japan.[30] However, the degree of oxygen enrichment was limited by copper losses in the furnace slag and, as a result, the oxygen content of the combustion air was increased only to 23-25%. The installation of slag treatment facilities was under consideration at this smelter, with a view toward increasing the oxygen content of the combustion air further, in order to increase the sulfur dioxide content of the furnace off-gases.[25] With the oxygen content of the combustion air increased to 23-25%, the concentration of sulfur dioxide in the reverberatory furnace off-gases was increased from 1-1/2% to 2-1/2% and the gases were routed directly to a single-stage contact sulfuric acid plant.[25,30,31] (See Section 4.1 - Sulfuric Acid Plants.)

Although this acid plant is no longer in operation on the off-gases from the reverberatory furnace, this is not a result of any technical problems that developed. Onahama Smelting and Refining expanded the smelter capacity by the construction of an additional reverberatory smelting furnace and additional copper converters. The acid plant now controls sulfur dioxide emissions from the new copper converters. A prototype magnesium oxide (MgO) off-gas scrubbing system, developed jointly by Onahama Smelting and Refining and Tsukishima Kikai Co., Ltd., controls sulfur dioxide emissions from the reverberatory smelting furnaces.[32] This magnesium oxide scrubbing system was commissioned in early 1973 and has experienced no serious operational problems, thus serving as a successful commercial demonstration of the

process as a means of controlling sulfur dioxide emissions from reverberatory furnaces.

From a review of the technical literature, it appears that oxygen enrichment of the combustion air in copper reverberatory smelting furnaces is under serious study in the Soviet Union.[27,33] In fact, it may already be in use at the Almalyk Copper Smelter where it was reported that increasing the oxygen content of the combustion air from 21% to 23-25% increased the concentration of sulfur dioxide in the off-gases from 1% to about 2-3%.[27] This is in general agreement with the results obtained at the Japanese copper smelter cited above. Furthermore, at this smelter in the Soviet Union, increasing the oxygen content of the combustion air in the reverberatory furnaces to the range of 28-30% increased the sulfur dioxide content of the off-gases to 3-1/2 to 4%, and the use of combustion air with 40% oxygen increased the sulfur dioxide concentration to 4-1/2 to 5%.[27,33] Thus, oxygen enrichment is a viable means of increasing the concentration of sulfur dioxide in the off-gases from reverberatory furnaces to the range of 3-1/2 to 5%.[28]

Increased copper losses in reverberatory furnace slags could result, however, from oxygen enrichment of the combustion air in an existing furnace, as at the Japanese smelter mentioned above. As the oxygen content of the combustion air increases, the smelting capacity of the furnace increases significantly. If the operators take full advantage of this and increase furnace capacity, the residence time of the slag formed in the furnace decreases. As a result, there is less settling time for the copper sulfide matte, which is formed from the concentrates charged to the furnace and

contained in the copper converter slags returned to the furnace, to separate from the slag. Thus, the copper content of the slag tapped from the furnace may increase.

It should be noted, however, that in some cases copper losses might actually decrease as a result of the higher operating temperatures attained with oxygen enrichment of the combustion air. At the higher temperatures, less limestone need be added to the silica fluxing materials to promote good fluidity of the silica slag within the furnace. Consequently, the volume of slag produced per unit of charge would decrease significantly and, although the copper content of the slag might remain the same or even increase, overall copper losses may actually decrease.

Decreased copper losses were observed at the Russian copper smelter mentioned above. At this installation, the coefficient of copper distribution between the furnace slag and matte remained essentially unchanged, even with the use of combustion air enriched to 40% oxygen, which resulted in an 85% increase in furnace smelting capacity. However, the mean furnace temperature increased from 2500°F to 2900°F at 40% oxygen. As a result, less limestone was utilized to reduce slag viscosity and this, in turn, led to lower copper losses due to the reduced volume of slag produced.[27]

If copper losses were to increase as a result of the increased furnace smelting capacity from the use of oxygen enrichment, however, they could be controlled by the installation of slag treatment facilities. Slag treatment would not only control copper losses directly, but could be utilized to increase the residence time of the reverberatory slags in the furnace by treatment of the converter slags, rather than

returning them to the furnace. Separate treatment of the converter slags results in a significant increase in furnace smelting capacity itself. At the Mitsubishi Metal Corporation, Naoshima, copper smelter in Japan, for example, separate treatment of the converter slags resulted in a 25% increase in reverberatory furnace smelting capacity and a marked decrease in copper losses.[23] Thus, if the increase in furnace capacity resulting from direct treatment of converter slags was not fully utilized, this would tend to increase the residence time of the reverberatory slag in the furnace and counter-balance or compensate to some extent for the decreased slag residence time that could result from oxygen enrichment as discussed above. Consequently, separate treatment of the converter slags alone might be sufficient to control increased copper losses.

The use of oxygen lancing in a reverberatory furnace to increase the concentration of sulfur dioxide by increasing the conversion of sulfide sulfur in the concentrates to sulfur oxides has not been applied on a commercial scale. The use of oxygen in this manner has been studied in the United States, and in 1965 a patent was granted by the U.S. Patent Office to the Kennecott Copper Corporation covering this concept.[34] The patent was based on pilot plant studies of oxygen injection into a reverberatory furnace using roof lances. Data submitted to the Patent Office in support of the patent application reported that the concentration of sulfur dioxide in the furnace off-gases increased from 2% to 12-18% through the use of this technique.[34] However, although this approach might prove to be a viable means of increasing the sulfur dioxide concentration in reverberatory furnace off-gases, additional development work would be required before this technique could be considered commercially demonstrated.

Electric furnaces--

Summary--Electric smelting furnaces can be utilized to make the copper smelting process more amenable to air pollution control. The quantity of sulfur oxide emissions from electric smelting furnaces is about the same as that from reverberatory smelting furnaces, per unit of charge. The volume of off-gases generated, however, is normally about an order of magnitude less and is primarily a function of the degree of air infiltration to the furnace.

Roasting can be utilized with electric smelting furnaces, as with reverberatory furnaces, to remove a significant portion of the sulfur in the concentrates, minimizing off-gas volumes and emissions from the smelting furnace and producing off-gases containing 1-5% sulfur dioxide, depending primarily on the degree of air infiltration. Even if the furnace off-gases contain less than 3-4% sulfur dioxide, the much lower volume of off-gases generated by an electric furnace permits the mixing of roaster and converter off-gases with the smelting furnace off-gases to obtain an off-gas of 4% or more sulfur dioxide.

The Brixlegg process which utilizes "dead-roasting" of copper concentrates cannot be considered commercially demonstrated at this time. Although this process has been in use for twenty years at an Austrian copper smelter, the smelter processes only 50 tons/day of copper concentrates and is only a pilot plant by domestic smelting standards.

Electric furnaces can be utilized to make the smelting operation more amenable to air pollution control by producing off-gases of

sufficient sulfur dioxide concentration for the production of sulfuric acid directly. "Green charge" smelting (no pre-roasting operation) and the reduction of air infiltration to a minimum can be used to produce off-gases containing 4-8% or more sulfur dioxide, depending primarily on the degree of air infiltration. Although not one of the six electric furnaces presently smelting copper concentrates in the world produces sulfuric acid as a by-product from the furnace off-gases, the Mufulira Copper Mines electric furnace in Zambia produces off-gases containing 3-4% sulfur dioxide, sufficient for the production of sulfuric acid. In addition, an electric furnace is currently under construction at the Inspiration Consolidated Copper smelter in Arizona, which is designed to produce off-gases of 4-8% sulfur dioxide.

General discussion--Electric smelting furnaces (Figure 3-8) provide the heat necessary for smelting copper ore concentrates by placing carbon electrodes in contact with the molten bath within the furnace. The electrodes dip into the slag layer of the bath, forming an electrical circuit. When an electric current is passed through this circuit, the slag resists its passage, generating heat and producing smelting temperatures. The charge of concentrates and fluxing materials is fed through the roof, and a layer of unsmelted charge covers the molten bath. Heat is transferred from the hot slag to the charge floating on its surface, and as the copper concentrates and fluxes are smelted, they settle into the bath, forming slag and matte.

The chemical and physical changes occurring in the molten bath of a reverberatory furnace are similar to those occurring in the molten bath of an electric furnace. Copper concentrates may be roasted prior to charging to an electric furnace, or charged directly

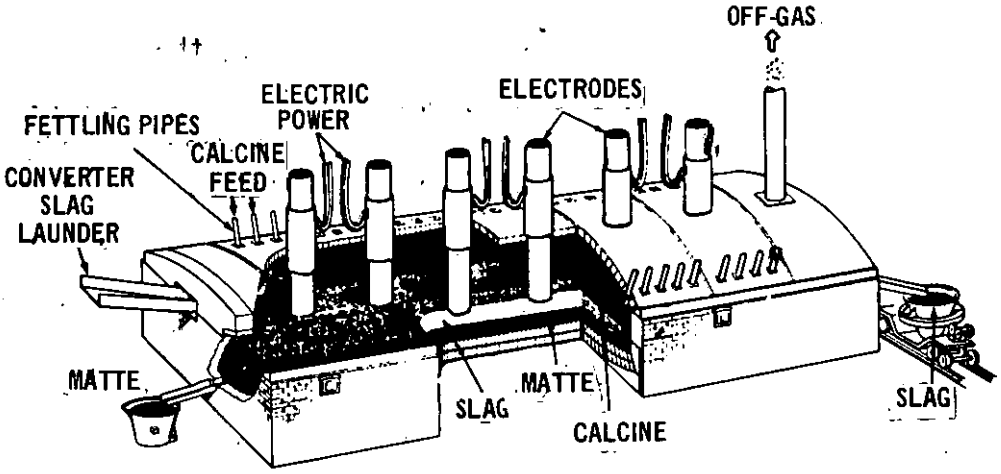

Figure 3-8 Electric smelting furnace.[2]

to the furnace. Also, copper converter slags are normally returned to electric furnaces for recovery of the copper contained in the slags, as in reverberatory furnaces. Consequently, the quantity of sulfur oxide emissions per unit of charge from electric smelting furnaces is about the same as that from reverberatory smelting furnaces.[35] In an electric furnace, however, there are no combustion gases, only gases formed by the vaporization of water and the chemical reactions which occur in the smelting process. As a result, the volume of off-gases from an electric furnace is basically a function of the degree of air infiltration to the furnace.[26,36]

Typically, however, electric smelting furnaces are designed and operated with large amounts of air infiltration to the furnace. Since an electric furnace does not discharge large volumes of hot combustion gases like a reverberatory furnace, the recovery of heat from the off-gases is usually not attractive. Frequently, therefore, enough air infiltration is provided to the furnace to lower the off-gas temperatures to the point where the use of less expensive refractory brickwork for the furnace roof and the off-gas uptake flues is possible. As a result, although electric smelting furnaces can be designed to take advantage of the absence of large volumes of combustion gases in the furnace to produce off-gases containing greater concentrations of sulfur oxides than the off-gases produced by reverberatory furnaces, this is not common practice.[37] The concentration of sulfur dioxide in the off-gases from electric smelting furnaces currently operating in various foreign countries is in the range of 1/2%, or less, to about 4%, depending on the type of charge smelted (roasted or unroasted), the mineralogy of the copper concentrates and the degree of air infiltration to the

furnace.[37] As discussed in the previous section concerning reverberatory furnaces, when the concentrates contain low levels of pyritic sulfur or are roasted, rather than charged directly to the furnace, the evolution of sulfur oxides is lowest.

Electric furnaces can be utilized, however, specifically as a means of making the smelting operation more amenable to air pollution control. Roasting of the concentrates can be employed, as with reverberatory furnaces, to remove a significant portion of the sulfur contained in the concentrates, reducing the emission of sulfur oxides from the electric furnace. The concentration of sulfur dioxide in the furnace off-gases would likely be in the range of 1-5% depending on the degree of air infiltration to the furnace. Even if the concentration of sulfur dioxide in the furnace off-gases were at the low end of this range (1-3%), since the volume of off-gases from the electric furnace would be an order of magnitude less than the volume of off-gases from a reverberatory furnace, the use of an electric furnace rather than a reverberatory furnace would permit the smelting furnace off-gases to be combined with the roaster and converter off-gases. The concentration of sulfur dioxide in the resulting gas mixture would be in the range of 4% or more and would be quite adequate for the production of sulfuric acid.[35, 38, 39, 40] To a certain extent, the blending of electric furnace off-gases would be offset by the elimination of the need for dilution of these gases with air to provide oxygen for the conversion of SO_2 to SO_3 in the manufacture of sulfuric acid.

Another approach to minimizing the emissions of sulfur oxides from electric smelting furnaces is to take advantage of the absence of combustion in the furnace to employ a fossil fuel as a reductant for the production of copper directly, rather than copper sulfide matte. This is the approach developed by the Montanwerke Brixlegg copper smelter in Austria cited in Section 3.1.1.1 - Roasting.[6] The process in use by this Austrian company, based on this concept, was developed specifically to minimize air pollution. The copper concentrates are first roasted to remove essentially all of the sulfur ("dead roasting"), converting the copper and iron sulfides to copper and iron oxides. The "dead-roasted" concentrates, fluxes and coke are then charged to an electric furnace. As the charge is smelted, the coke preferentially reduces the copper oxides over the iron oxides, forming elemental copper. The iron oxides combine with the fluxes to form a slag, and the copper settles out as a separate molten phase which is tapped from the furnace. There is no need for copper converters.

The copper produced by the Brixlegg process is referred to as "black copper" and contains a much higher level of impurities than "blister copper" produced in copper converters by conventional pyrometallurgical processes. "Black copper" is only 90-95% copper, whereas "blister copper" is typically 98-99% copper. Thus, "blister copper" contains only 1-2% of impurities such as iron, nickel, lead, and arsenic, while "black copper" contains 5-10% of these impurities.[6] However, both "black copper" and "blister copper" require fire-refining to produce anode copper suitable for casting into anodes for electrolytic

refining. Through the use of various fire-refining techniques, as discussed in Section 3.1.1.5 - Copper Refining, most of the impurities in "black copper" can be eliminated. As a result, although "black copper" requires extensive fire-refining compared to that normally required with "blister copper," in many cases anode copper of comparable purity can be produced from both "black copper" and "blister copper."

Some impurities, however, such as nickel and bismuth, are particularly difficult to eliminate by various fire-refining techniques. If concentrates processed by the Brixlegg process contained high levels of these impurities, changes in domestic electrolytic refining practice might also be necessary, as discussed in Section 3.1.1.5. However, while there may be few technical limitations to the production of high-purity copper equivalent to that presently produced within the domestic industry by the Brixlegg process,[6] due to the greater degree of refining treatment necessary to eliminate various impurities contained in "black copper," economic considerations may limit the application of the Brixlegg process to concentrates containing low levels of impurities.

The Brixlegg process lends itself readily to various emission control techniques. With no need for copper converters and essentially all the sulfur in the concentrates removed in the roasting step, all the sulfur oxide emissions are confined to one processing operation. Furthermore, through the use of fluid-bed roasters, these emissions are discharged in an off-gas stream of high concentration and

uniform flow rate suitable for the production of sulfuric acid or even elemental sulfur. However, although this process has been in use by the Montanwerke Brixlegg Co. for twenty years, the smelting capacity of this Austrian smelter is only about 50 tons/day of concentrates, compared to smelting capacities in a typical domestic smelter of 1000-2000 tons/day of concentrates. Therefore, the process cannot be considered to have been demonstrated on a commercial scale.

Rather than reducing the level of sulfur oxide emissions from electric smelting furnaces to a minimum, various techniques can be employed to increase the concentration of sulfur dioxide in the furnace off-gases. As mentioned in the previous section concerning reverberatory furnaces, although technical considerations normally do not limit the applicability of air pollution control systems to gas streams containing low concentrations of sulfur dioxide, economic considerations frequently do. Thus, various techniques which increase the concentration of sulfur dioxide in the off-gases should make the smelting furnace more amenable to air pollution control. Increasing the concentration of sulfur dioxide in the off-gases from an electric furnace would entail the use of green charge smelting (no roasting operation) and the reduction of air infiltration to a minimum.

Sealing the furnace and flue-gas ductwork against air infiltration would require the use of copper concentrate driers to insure that the moisture content of the charge would be no greater than 5-7%.[25] This would probably be sufficient to prevent the eruptions or

explosions in the furnace resulting from the vaporization of water, which promotes the formation of cracks or leaks in the furnace roof and sidewalls and throughout the flue-gas ductwork. The use of driers to reduce the moisture content of the charge to 1/2%, or less, would further reduce dilution of the sulfur oxides in the furnace off-gases due to water vapor.

As previously discussed, the volumes of off-gases from electric smelting furnaces are about an order of magnitude less than the volume of off-gases from conventional, domestic reverberatory smelting furnaces. As a result, with the use of green charge smelting and minimum air infiltration, the concentration of sulfur dioxide in the off-gases from an electric smelting furnace is normally in the range of 4-8%,[39,41] although it is reported that concentrations as high as 10-20% are possible.[26] There is some fluctuation in the off-gas flow rate and sulfur dioxide concentration as copper converter slags are returned to the furnace and fresh concentrates and fluxes are charged; however, these tend to be rather minor compared to the fluctuations in off-gas flow rate and sulfur dioxide concentration experienced with copper converters, and the control of sulfur oxide emissions by the manufacture of sulfuric acid from the furnace off-gases would be quite straightforward.[21]

Currently, six copper smelting installations have been identified which operate electric furnaces specifically for the smelting of copper concentrates.[37,42] However, there are numerous installations throughout the world which use electric furnaces for the smelting

of nickel, copper/nickel, and copper/cobalt concentrates. Although the pyrometallurgical production techniques for nickel, and to a certain extent cobalt, are similar to those for copper, time constraints have not permitted a thorough and complete investigation of these furnaces.

Five of these six electric furnace installations are located in foreign countries.[37,42] Sulitjelma Gruber at Sulitjelma, Norway; Montanwerke Brixlegg at Brixlegg, Austria; and Bolident Aktiebolag at Boliden, Sweden, operate electric smelting furnaces in Europe. Kilemba Mines at Jinja, Uganda, and Mufulira Copper Mines at Mufulira, Zambia, operate electric smelting furnaces in Africa. In the United States, Cities Service Copper operates an electric smelting furnace at Copperhill, Tennessee.

With the exception of Montanwerke Brixlegg in Austria, none of these installations utilize the electric furnace primarily as a means of making the smelting operation more amenable to air pollution control. Rather, electric smelting is utilized primarily because electric power is less expensive or more dependable than various fossil fuels in these areas. Sulfur oxide emissions from the smelting operation are controlled at only one of these installations — the Cities Service Copper installation in Tennessee. However, this is the result of special circumstances. Consequently, the electric smelting furnaces at these installations are not designed to minimize air infiltration.[37] As a result, the concentration of sulfur dioxide in the furnace off-gases at these installations is in the range of 1-2% or less, with the exception of the installation at Mufulira, Zambia, at which the concentration of sulfur dioxide in the furnace off-gases is in the range of 3-4%.[37]

A second domestic installation, however, is scheduled to initiate operations with an electric smelting furnace for the smelting of copper concentrates by mid-1974. The Inspiration Consolidated Copper Co. is installing this furnace at their Arizona smelter primarily as a means of making the smelter more amenable to air pollution control. Sulfur dioxide emissions from the furnace will be controlled through the manufacture of sulfuric acid in a double-absorption sulfuric acid plant. The furnace will operate as a "green-charge" furnace, processing copper concentrates which are first dried to 0.1-0.3% moisture. The concentration of sulfur dioxide in the furnace off-gases is projected to be in the range of 4-8%.[41]

Another domestic installation is also scheduled to initiate electric smelting of copper concentrates by late 1975. The Anaconda Copper Co. plans to install an electric smelting furnace at their Anaconda, Montana, smelter to replace the four existing reverberatory smelting furnaces. The major reason cited by Anaconda for this decision is the increasing difficulty of obtaining adequate supplies of fossil fuels to fire the reverberatory furnaces and the frequent curtailments of fuel supply during the winter months.[40] The electric smelting furnace will operate as a "calcine-charge" furnace, processing the calcines from a fluid-bed roaster which will roast the copper concentrates. The concentration of sulfur dioxide in the combined off-gases from the fluid-bed roaster, the electric smelting furnace, and the copper converters is projected to be in the range of 6%.[40]

Flash Furnaces--

Summary--The degree of sulfur removal in a flash smelting furnace is quite high compared to either reverberatory or electric smelting furnaces and is normally in the range of 50-80% of the sulfur contained in the concentrates. The concentration of sulfur dioxide in the off-gases from flash furnaces of Outokumpu Oy design is in the range of 10-20%. The concentration of sulfur dioxide in the off-gases from flash furnaces of INCO design is in the range of 75-80%. This difference in sulfur dioxide concentration level results from INCO's use of commercial-grade oxygen rather than air to sustain the flash smelting reaction in the furnace. The operation of a flash smelting furnace is "steady-state" with respect to the off-gas flow rate and concentration of sulfur dioxide in the off-gases.

The flash smelting process was successfully demonstrated on a commercial scale by both Outokumpu Oy and INCO in the early 1950's. By mid-1973 thirteen copper smelting installations in the world operated flash smelting furnaces ranging in capacity from 300 tons/day to 1500 tons/day of copper concentrates. One installation is of INCO design and the remaining twelve are of Outokumpu design.

Flash smelting furnaces can be designed to operate autogenously. Under these conditions no external source of fuel or energy is required. The heat released by the flash smelting reaction is sufficient to smelt the furnace charge. Thus, flash smelting requires a lower energy input per pound of copper produced than either reverberatory or electric smelting.

Flash furnaces typically produce high-grade mattes containing 45-65% copper. This is higher than the grade of matte produced

at most domestic smelters, which typically contains 30-40% copper. High-grade mattes result in reduced secondary copper scrap processing capacity. The adoption of flash smelting by the domestic primary copper smelting industry would thus reduce to some extent the ability of the domestic industry to reprocess copper scrap. However, any reduction in the capability of the domestic primary smelting industry to recover copper from copper scrap would encourage the expansion of the domestic secondary smelting industry in most cases, rather than limit the recovery of copper from scrap.

Unlike reverberatory smelting or electric smelting installations, flash smelting installations require slag treatment facilities to recover copper from both the flash furnace and converter slags.

Flash smelting furnaces also require copper concentrates containing lower ratios of Cu/S than are necessary with either reverberatory or electric smelting furnaces. However, concentrates with Cu/S ratios as high as 1.3-1.5 can be smelted, and an EPA survey reveals that approximately 95% of domestic ore concentrates have Cu/S ratios in the range of 0.6-1.3 or less.

Conventional flash smelting furnaces, however, cannot process significant tonnages of copper precipitates. The adoption of flash smelting by the domestic industry would thus reduce the ability of the industry to recover copper from copper oxide ores by conventional means. However, this would encourage the use of acid leaching/liquid ion exchange/acid stripping/electrowinning operations, rather than acid leaching/copper precipitation/smelting operations.

Copper concentrates containing high levels of volatile metals,

the most common being lead and zinc, can present major problems in the heat recovery facilities associated with flash smelting furnaces. The highest levels that can be tolerated are 2-1/2 to 3% lead and 5-1/2 to 7% zinc. However, an EPA survey reveals that approximately 96%, 99%, and 98% of domestic ore concentrates contain less than 2% lead, 4% zinc, and 1% arsenic, respectively. Furthermore, other volatile metals, such as cadmium, beryllium, vanadium, antimony and tin, are present only in very small amounts (<10 ppm to <1000 ppm) in domestic concentrates.

General discussion--Essentially, flash smelting is a process in which copper sulfide ore concentrates are smelted by burning a portion of the iron and sulfur contained in the concentrates while they are suspended in an oxidizing environment. As such, the process is quite similar to the combustion of pulverized coal. The concentrates and fluxes are injected with pre-heated air, oxygen-enriched air, or even pure oxygen, into a furnace of special design, and smelting temperatures are attained as a result of the heat released by the rapid, flash combustion of iron and sulfur.

Currently two companies have developed flash smelting technology: Outokumpu Oy in Finland and International Nickel Co. (INCO) in Canada. Both companies offer their technology for license either through their own offices or various contractors. The major difference between these technologies is in the design of the flash smelting furnace and the oxidizing environment in the furnace. Outokumpu uses pre-heated air, or oxygen-enriched air, as the oxidizing medium, whereas INCO uses pure oxygen. However, it appears that Outokumpu has been more aggressive in marketing their technology than has INCO, and, as a result, most of the flash smelting

furnaces presently operating in the world are of the Outokumpu design. For this reason, this discussion will dwell primarily on Outokumpu technology, with brief references to the INCO technology.

The charge to a flash smelting furnace, which is composed of copper sulfide concentrates and fluxing materials, must be fine-grained and essentially "bone-dry" to insure an even and homogenous distribution of the charge as it is injected into the furnace. The copper concentrates should be of a fineness corresponding to at least 50% minus-200 mesh, and the fluxing material should be of a fineness corresponding to at least 80% minus-14 mesh.[10] Since most concentrates are obtained from ores by flotation techniques, their fineness normally meets these requirements without further grinding. The fluxing materials, however, usually require additional grinding beyond that necessary for use in reverberatory or electric smelting furnaces.

In almost all cases, it is necessary to dry the charge to the "bone-dry" conditions (0.1-0.3% moisture) before smelting, as the concentrates typically contain from 5-15% moisture following flotation.[10,43] It is common practice, however, to use the drying facilities not only for drying the charge to the furnace, but also for blending the fluxing materials and the various copper concentrates available to provide a charge of uniform composition.

The Outokumpu flash smelting furnace shown in Figure 3-9 consists of three distinct sections: a reaction shaft, a settler and an uptake shaft. The dried copper concentrates and fluxing materials are injected continuously down into the reaction shaft through concentrate burners located at the top of this shaft. In these burners, the

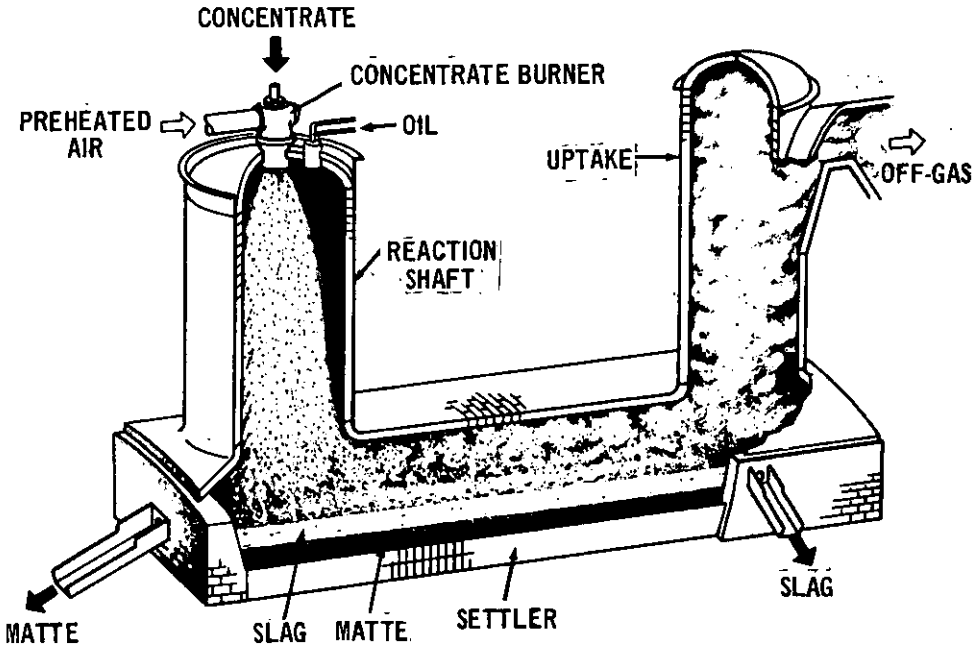

Figure 3-9 Outokumpu flash smelting furnace.[2]

charge is mixed with pre-heated air or oxygen-enriched air and dispersed as a fine-grained suspension. Oil is also injected into the reaction shaft to sustain the flash combustion reactions.

In the reaction shaft, the heat released from the combustion of the oil and the flash combustion of a portion of the iron and sulfur contained in the concentrates increases the temperature to the point where the concentrates and fluxing materials are smelted. A fine rain of molten particles thus falls from the reaction shaft into the molten bath in the settler. Copper matte settles through the slag layer into the matte layer beneath, while iron oxides remain in the slag layer.

The furnace off-gases withdrawn from the uptake shaft normally contain 10-20% sulfur dioxide, depending on the copper concentrate analysis, the grade (copper content) of matte produced, the degree of oxygen enrichment and the degree of combustion air pre-heat.[1,44] Typically, however, from 6-7% of the concentrates contained in the charge to the furnace is entrained as molten or semi-molten particles in the off-gases. In addition, if the copper concentrates contain volatile metals, such as lead, zinc, arsenic, etc., these metals are volatilized in the reaction shaft, and the dust content of the off-gases increases accordingly.[10] The off-gases are cooled in a waste-heat boiler and passed through an electrostatic precipitator to recover these concentrate dusts, which are returned to the furnace charge.

The INCO flash smelting furnace shown in Figure 3-10 is of a much simpler mechanical design than the Outokumpu furnace and is essentially a reverberatory furnace with an uptake shaft extending the length of the furnace roof. The dried copper concen-

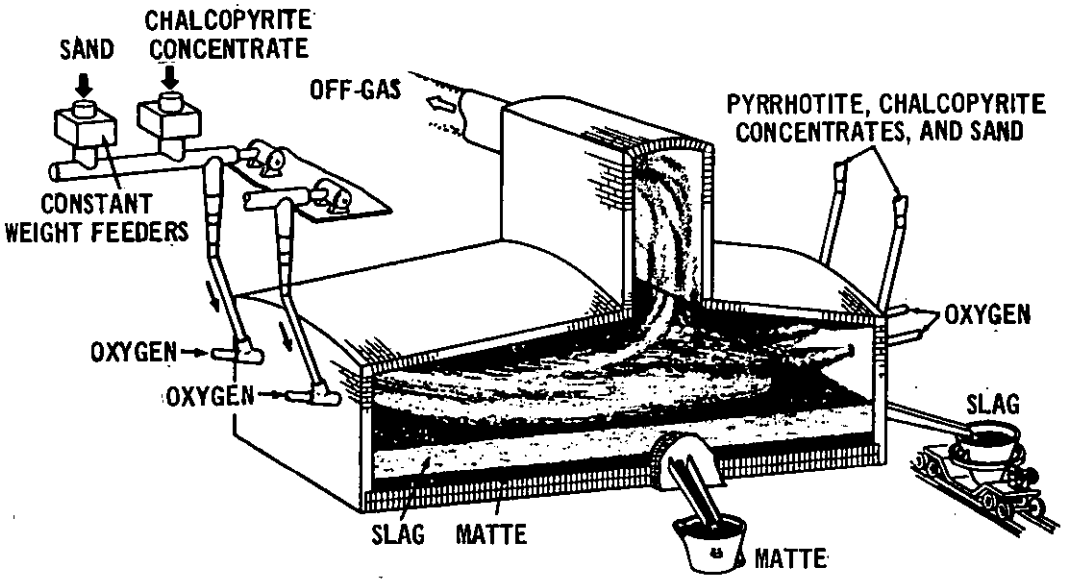

Figure 3-10 INCO flash smelting furnace.[2]

trates and fluxing materials are injected continuously into the furnace through concentrate burners located along the furnace sidewalls. The charge is mixed with pure oxygen in the burners and is dispersed as a fine-grained suspension in the furnace. As in the Outokumpu furnace, the flash combustion of a portion of the iron and sulfur in the concentrates smelts the charge, and a fine rain of molten particles falls into the molten bath, separating into a slag layer and a matte layer.[45]

The concentration of sulfur dioxide in the INCO furnace off-gases is quite high, normally in the range of 75-80%, as a result of the use of pure oxygen, rather than air, as the oxidizing medium in the furnace.[29] It appears that the dust loading of the off-gases is also quite high; however, this is probably offset for the most part by the lower off-gas volumes produced.

In a flash smelting furnace, the combustion reactions utilize completely the oxygen contained in the process atmosphere. Consequently, the regulation of the oxygen/concentrate ratio in the furnace controls the extent to which the flash combustion reactions proceed and thus determines both the grade of matte produced and the heat released for smelting the furnace charge. Increasing the incoming temperature or oxygen content of the combustion air also effectively increases the heat released for smelting. As a result, in some cases it is possible for the flash combustion and smelting reactions to occur autogenously. Under these conditions, the heat released by the oxidation of iron and sulfur is sufficient to completely smelt the furnace charge.

The grade of copper matte produced in a flash furnace is thus dictated not only by the copper concentrate analysis, but frequently by the degree to which matte grade, oxygen-enrichment and combustion air pre-heat are incorporated into the furnace design to approach autogenous operation. In practice, flash furnaces normally produce matte grades in the range of 45-65%, with matte grades of 50-60% most common.[10] This is somewhat higher than the grade of matte normally produced at most domestic copper smelters in reverberatory furnaces, which is in the range of 25-50%,[4] with grades of 30-40% most common.[46]

Production of higher grade mattes, however, offers both advantages and disadvantages from an operating point of view. As the grade of matte increases, the volume of matte associated with a unit volume of copper decreases, and the capacity of the copper converters necessary to produce a given amount of copper decreases. In addition, copper converter operating costs are a direct function of converter work which, in turn, is related to matte grade. Lower matte grades with their higher iron content require more work and thus converter operating costs increase with decreasing matte grade.[47]

Most domestic copper smelters, however, avoid, if possible, operating copper converters with high-grade mattes. High-grade mattes tend to run relatively cool during the first-stage slag blow, since less iron is present in the matte, and only a small amount of slag is formed. In practice, some smelter operators take advantage of the excessive heat generated during the slag blow by the oxidation of iron sulfide, which releases about four times as much heat per pound as the oxidation of copper sulfide, to smelt a significant amount of

secondary copper scrap and smelter reverts in the converters. However, although flash smelting installations normally reprocess all the smelter reverts produced within the smelter,[48] only limited quantities of secondary copper scrap are processed.

In 1971, approximately 0.35 MM tons or 20% of the 1.60 MM tons of copper produced by the domestic primary copper smelters was recovered from copper scrap.[49] Approximately 0.30 MM tons of copper was produced at secondary copper smelters from copper scrap.[49] Thus, the recovery of copper from copper scrap represents a significant portion of the production of copper at domestic primary copper smelters. Not all domestic copper smelting installations currently process significant quantities of secondary copper scrap. However, as the Bureau of Mines statistics indicate, a number do and at these installations the capacity to smelt significant tonnages of scrap is dependent on the operation of converters with low-grade mattes. Consequently, the adoption of flash smelting by the domestic industry would reduce, to some extent, the ability of the industry to reprocess copper scrap. It is likely, however, that this limitation associated with flash smelting will probably encourage realignment of the domestic smelting industry, rather than limit the growth of the industry or prohibit the application of flash smelting. A reduction in the capacity of the domestic primary smelting industry to recover copper from copper scrap would encourage the expansion of the domestic secondary smelting industry in most cases, rather than limit the recovery of copper from scrap.

If copper ore concentrates contain high levels of impurities, such as arsenic, antimony, and bismuth, smelting by conventional domestic means to produce high-grade mattes can result in the production of blister

copper containing appreciable levels of these impurities. With low-grade mattes, converters are quite efficient in eliminating volatile metallic impurities. Increased matte grade, however, leads to decreased converter blowing time and lower converter temperatures, as discussed above, which in turn tends to result in decreased impurity elimination.[12] However, with the flash smelting process a major portion of the volatile metallic impurities are eliminated in the flash furnace. Indeed, with concentrates containing high levels of impurities, this presents problems in the recovery of waste heat from flash furnace off-gases, as discussed later in this section.

As a result, flash smelting is somewhat limited in terms of processing concentrates containing high levels of impurities, and thus it is unlikely that impurity problems associated with the production of high-grade mattes would arise at installations incorporating flash smelting. Furthermore, in those few cases where the problem might arise, increased fire refining of the blister copper produced in the converters and changes in the electrolytic refining circuit, as discussed in Section 3.1.1.5 - Copper Refining, could undoubtedly be incorporated into the smelter operations to resolve the problem.

Unlike the slags normally obtained from either reverberatory smelting furnaces or electric smelting furnaces, which typically contain in the range of 0.4-0.7% copper[4] and are discarded without further treatment, the slags obtained from most flash furnaces typically contain in the range of 1-2% copper, and thus usually

require further treatment to recover copper.[10] Not all flash furnaces currently operating, however, produce slags of such high copper content. The recently commissioned (January 1972) Tamano flash smelter of Mitsui Mining and Smelting Co. Ltd., which is of Outokumpu design, has to date been successful in controlling the copper content of the furnace slag to 0.5-0.6%,[50,51] and the copper content of the slag obtained from the flash furnace designed and operated by INCO in Canada is normally in the range of 0.4-0.5%.[52]

At both of these installations, the flash furnace has been designed to produce relatively low-grade mattes (45% at the Japanese installation and 50% at the Canadian installation) and to provide sufficient residence time in the furnace to permit copper matte entrained in the slag to settle out. These concepts are not as easy to implement as they may at first appear, however. Production of low-grade mattes in flash smelting furnaces is limited to copper concentrates containing excessive pyrite sulfur (FeS_2) and low Cu/S ratios, or it requires special design of the furnace to incorporate a high degree of combustion air pre-heat and/or oxygen enrichment. Sufficient sulfur must be present in the concentrates not only to provide the heat necessary for smelting by combustion, but also to remain in the matte formed so that the matte is low grade. Increasing the residence time in the furnace requires a major increase in the volume of the molten bath and, as such, requires an increased heat release in the furnace to prevent "freezing" of the bath.

Production of low-grade mattes in flash furnaces by firing fossil fuel to provide either the heat to keep the bath from "freezing" or to provide the heat for smelting concentrates containing "normal"

levels of pyrite sulfur defeats the major incentive toward flash smelting over conventional smelting, which is autogenous or close to autogenous operation. Furthermore, firing fossil fuel reduces the smelting capacity of the furnace and dilutes the sulfur oxides in the off-gases. At the Japanese installation, these problems have been overcome through the use of a high degree of combustion air pre-heat and the use of electrical energy in the same manner as an electric smelting furnace to maintain the furnace bath in a molten state.[50] At the Canadian installation, pure oxygen, rather than air, is used to support the flash combustion reactions, thus increasing the heat available for smelting and maintaining the furnace bath in a molten state by decreasing the heat removed in the furnace off-gases.[53]

Unlike reverberatory smelting furnaces or electric smelting furnaces, however, flash smelting furnaces do not have the flexibility to recover copper from the slags produced in the copper converters. Consequently, converter slags, which typically contain in the range of 5-6% copper, are not returned to the flash furnace and require slag treatment.[10,53] As a result, not only do slags produced in the flash furnace require slag treatment facilities to recover copper, but also those produced in the copper converters.

Various methods can be used for slag treatment, and the choice frequently depends on local circumstances. Slag settling alone frequently achieves copper recoveries of 75-80%, and the use of slag flotation or slag reduction and settling can achieve copper recoveries of 90-95%.[54] The use of slag settling techniques on the

combined flash furnace and converter slags, therefore, normally reduces their copper content to 0.5-0.7%, while the use of slag flotation or slag reduction and settling techniques normally reduces their copper content to 0.25-0.35%.[10,54] With the use of settling techniques, with or without slag reduction, the copper is recovered from the slags as a copper sulfide matte, which is charged to the converters. The use of flotation techniques, however, recovers the copper as a copper concentrate, which is recycled to the flash furnace charge.

Thus, through the use of slag settling techniques, overall copper recovery at a flash smelter is frequently about the same as that at a conventional domestic smelter. The use of slag flotation or slag reduction and settling techniques, however, frequently increases overall copper recovery somewhat above that obtained at a conventional domestic smelter.[43,48]

In a reverberatory furnace or an electric furnace, the heat necessary for smelting of the copper concentrates is provided by combustion of a fossil fuel or by the use of electrical energy. In a flash furnace, however, as mentioned earlier, most of the heat necessary for smelting is provided by flash combustion of excessive metallic sulfide sulfur contained in the concentrates. Thus, while in reverberatory or electric smelting furnaces only enough sulfide sulfur must be present in the concentrates to insure that essentially all the copper will form a copper sulfide matte, in flash smelting furnaces there must be sufficient sulfide sulfur in excess of this amount to provide a major portion of the heat necessary for smelting.

In actual practice, this is normally not a major limitation of the flash smelting process, as evidenced by its widespread use throughout Europe and Asia. Most copper concentrates contain more than enough sulfur necessary to remove the copper as a matte during smelting, and, as a result, the combustion of a portion of this excess sulfur to produce most of the heat necessary for smelting merely increases the grade of matte produced in the smelting furnace.[48,55]

Flash smelting furnaces can be designed to process copper concentrates containing copper/sulfur ratios as high as 1.3-1.5.[55,56] Normally, however, this ratio is typically in the range of 0.6-0.9 at most flash smelting installations.[55,56] The extent to which supplemental fuel, pre-heated air, oxygen-enriched air and the grade of matte produced is used to balance the heat requirements in the flash furnace actually determines the maximum ratio of copper to sulfur in the concentrates that can be processed. Extensive use of pre-heated, oxygen-enriched air in combination with the production of high-grade mattes approaching white metal (80% copper) permits the flash smelting of copper concentrates with copper-to-sulfur ratios approaching 1.5, while producing off-gases that contain high concentrations of sulfur oxides.[55]

In most cases, however, it would not be necessary to resort to measures such as these to flash-smelt domestic concentrates. A survey by EPA of typical copper sulfide ore concentrates representing some 95% of the 6.5 MM tons/yr of domestic concentrates smelted by the primary copper smelting industry reveals that approximately 65% of these concentrates have Cu/S ratios in the range of

0.6-0.9 or less.[57] This percentage increases to about 95% if the range of Cu/S ratios is extended to include concentrates with Cu/S ratios up to 1.3. Consequently, it appears that flash smelting is directly applicable to from 65-95% of the domestic ore concentrates. As a result, the requirement of flash smelting for concentrates containing sufficient sulfide sulfur in excess of that necessary to recover all the copper in the concentrates as a copper sulfide matte is not likely to be a major limitation of the flash smelting process in the United States.

A more serious limitation, however, which is somewhat related to the Cu/S ratio in concentrates, is likely to be the inability of flash smelting furnaces to process significant tonnages of copper precipitates. Copper precipitates are produced from the sulfuric acid leaching of both copper oxide and low-grade copper sulfide/copper oxide ores. Copper is leached from the ore, forming a copper sulfate solution which is transferred to a vat. Scrap iron is added to the vat and copper ions in solution are displaced by iron ions, causing the copper to precipitate from solution. Copper precipitates normally contain 75-80% copper with no sulfur and are usually charged to a reverberatory smelting furnace with copper sulfide concentrates. Excess sulfur in the concentrates is utilized to convert the copper in the precipitates to copper sulfide. Thus, the copper in the precipitates is recovered as copper sulfide matte.

Since flash-smelting furnaces combust most of the excess sulfur contained in the concentrates to provide most of the heat for smelting, significant tonnages of copper cannot be recovered from

copper precipitates in the furnace. Although copper precipitates can also be pelletized or briquetted and charged to copper converters, this requires that the converters operate on low-grade mattes to both melt the precipitates and convert the copper in the precipitates to copper sulfide during the first stage or slag blow of the converter. However, flash smelting normally produces high-grade mattes and, as a result, the flash smelting process is not amenable to the recovery of copper from copper precipitates.

In 1971, approximately 0.20 MM tons or about 15% of the 1.60 MM tons of copper produced by the domestic primary smelting industry was recovered from copper precipitates.[49] Consequently, the recovery of copper from copper precipitates represents a significant portion of the production of copper at domestic primary copper smelters. Not all domestic copper smelting installations currently process significant tonnages of copper precipitates; however, as the Bureau of Mines statistics indicate, a number do. Furthermore, as air pollution regulations force the reduction of sulfur dioxide emissions, present acid leaching operations are likely to be expanded by as much as 100% or more to utilize the sulfuric acid manufactured from sulfur dioxide as an alternative to acid neutralization. Thus, while the recovery of copper from copper precipitates currently represents about 15% of the total domestic copper production, this could increase significantly in the future.

Although the adoption of flash smelting by the domestic industry would reduce to some extent the ability of the industry

to recover copper from copper precipitates, it should be noted that, as in the case of copper scrap, this limitation will likely encourage realignment of the domestic smelting industry rather than limit the growth of the industry or prohibit the application of flash smelting. The use of electrowinning rather than copper precipitation for the recovery of copper from copper sulfate/acid leaching solutions will undoubtably increase in the next few years. Currently, electrowinning acccounts for about 20% of the copper recovered from acid leaching operations, with precipitation followed by smelting at primary copper smelters accounting for the other 80%.

However, each pound of copper precipitated from a copper sulfate/acid leaching solution requires about three pounds of scrap iron.[58] As domestic sulfuric acid leaching operations are expanded, scrap iron is not likely to be economically available in sufficient quantities to precipitate the copper, thus encouraging the use of acid leaching/liquid ion exchange/acid stripping/electrowinning processes[59] rather than conventional acid leaching/copper precipitation/smelting processes. Consequently, a reduction in the capacity of the domestic smelting industry to recover copper from copper precipitates through the use of flash smelting would further encourage the expansion of the domestic electrowinning industry rather than limit the recovery of copper from copper oxide ores by acid leaching.

Another limitation of the flash smelting process is the requirement that the copper concentrates charged to the furnace contain low levels of volatile metals such as lead, zinc, and arsenic. As mentioned earlier, typically from 6-7% of the concentrates contained in the charge are entrained as molten or semi-molten

particles in the off-gases. A major portion of the volatile metals contained in the concentrates are vaporized and leave the furnace in the off-gases. As the off-gases cool, these volatile metals condense. Thus, the furnace off-gases can contain appreciable loadings of molten or semi-molten particles, depending on the level of volatile metals contained in the copper concentrates. As a result, while copper concentrates containing high levels of volatile metals present no particular problems in the flash furnace, they do present problems to the recovery of heat from the furnace off-gases.

Flash furnace off-gases are normally cooled by waste-heat boilers incorporating both a radiation section and a convection section. The purpose of the radiation section is to cool the off-gases sufficiently to solidify the molten particles entrained in the gases, and to lower their temperature below the sintering point before the gases enter the convection section. Particles thus striking the convection tubes are completely solidified and do not adhere to the tubes. The sintering temperature of the particles is dependent on their composition. If the particles contain considerable amounts of lead and zinc, for example, their sintering temperature is relatively low and they easily adhere to any cooling surface.[60] Thus, copper concentrates containing high levels of volatile metals, the most common being lead and zinc, can present major problems in the heat recovery facilities normally incorporated into the design of a flash furnace.

In practice, the highest levels of lead and zinc that can be tolerated in the concentrates charged directly to a flash furnace,

with complete recycling of the dusts recovered from the off-gases, are about 2% lead and 4-1/2% zinc.[48,61] Higher levels of lead and zinc can be tolerated, however, if the dusts recovered are not recycled but treated by other means. Currently, for example, the Dowa Mining Company's flash-smelting furnace at Kosaka, Japan, is processing, on a continuous basis, copper concentrates containing 2-1/2 to 3% lead and 5-1/2 to 7% zinc by treating the dusts recovered from the furnace off-gases in facilities for the recovery of lead and zinc. Copper is also recovered and returned to the flash smelter.[48,55]

A number of approaches could be used to treat the dusts recovered from flash furnace smelting concentrates containing high levels of lead and zinc. Perhaps the simplest would involve shipment of the dusts to a lead or zinc smelter. Lead and zinc would be recovered and a copper residue returned. The use of various techniques to treat the dusts at the copper smelter, however, might be more attractive. Figures 3-11 and 3-12 outline two approaches for the treatment of flash furnace dusts containing high levels of lead and zinc.[62] In both approaches, copper is recovered from the dusts and charged to copper converters rather than recycled to the flash furnace.

In most cases, however, it is not likely that flash smelting will be severely limited in processing domestic ore concentrates due to high levels of volatile metals. A survey by EPA of typical copper sulfide ore concentrates representing some 85% of the 6.5 MM tons/yr of domestic concentrates smelted by the primary copper smelting industry is summarized in Table 3-1. As shown in this table, only 2%, 1%, and 2% of the domestic ore concentrates surveyed contained

Figure 3-11 Dry Method for Recovering Copper, Lead and Zinc From Flash Furnace and Converter Dusts[57]

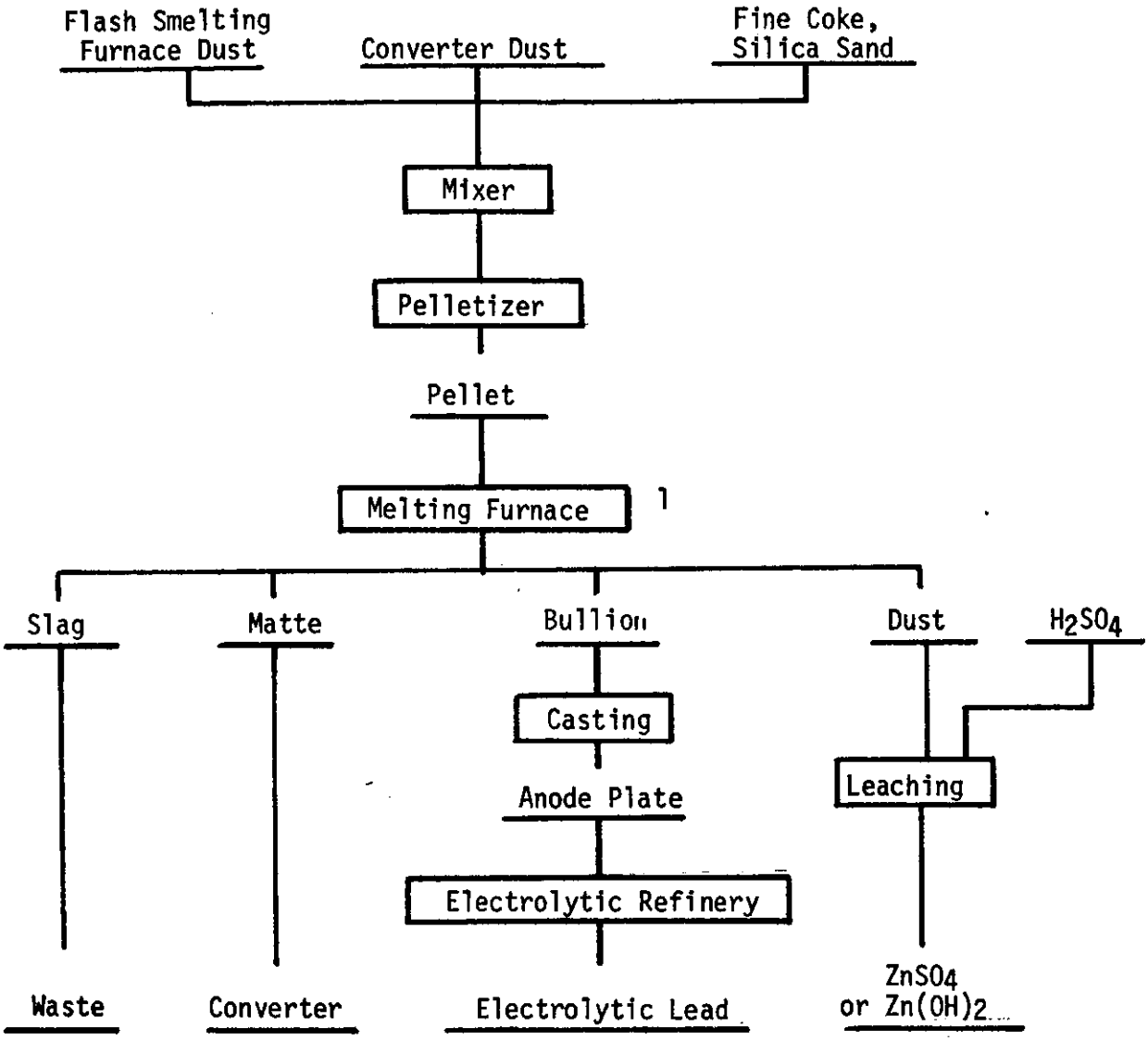

Notes

1. Rotary furnace, electric furnace or blast furnace.

Figure 3-12. Wet Method for Recovering Copper, Lead and Zinc from Flash Furnace and Converter Dusts[57]

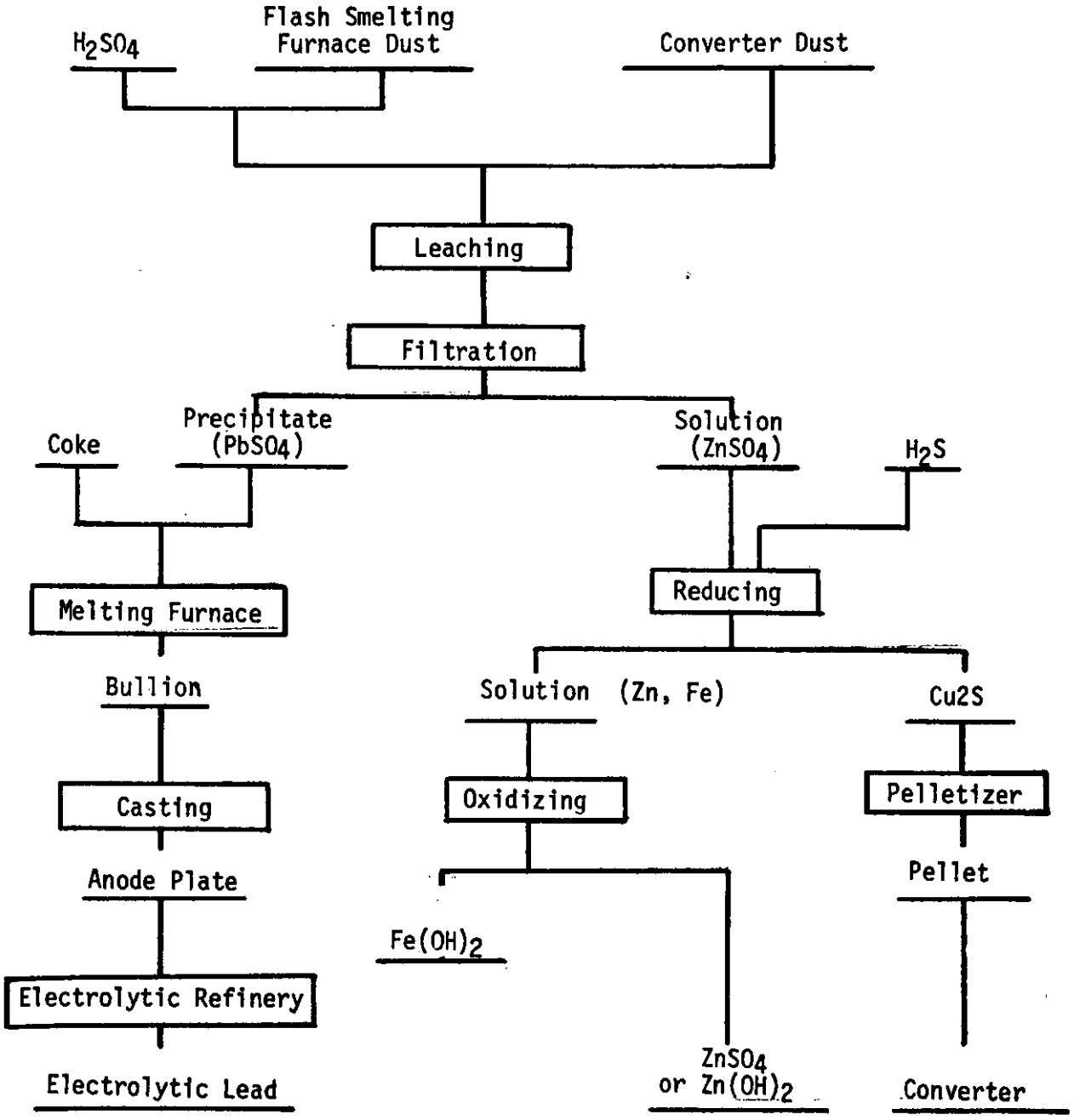

Table 3-1 Typical Levels of Volatile Metals In Domestic Copper Ore Concentrates

	Concentration Level	Percent of Concentrates Surveyed
Lead	<5000 ppm	96%
	5000 ppm-<2%	2%
	≥2%	2%
Zinc	<1%	67%
	1-<4%	32%
	≥4%	1%
Arsenic	200-1000 ppm	88%
	1000 ppm-1%	10%
	>1%	2%
Cadmium	<1000 ppm	100%
Beryllium	<10 ppm	100%
Vanadium	<100 ppm	100%
Antimony	<200 ppm	97%
	>200-5000 ppm	3%
	>5000 ppm	<1/2%
Tin	<1000 ppm	100%

more than 2% lead, 4% zinc, and 1% arsenic, respectively. Furthermore, other volatile metals, such as cadmium, beryllium, vanadium, antimony and tin, are all present only in very small amounts (<10 ppm to <5000 ppm) in domestic ore concentrates. Consequently, it appears that the limitation of flash smelting furnaces to smelt concentrates containing high levels of volatile metals is not likely to limit the use of flash smelting in the United States.

The degree of sulfur removal in a flash smelting furnace is usually quite high and depends specifically on the composition of the concentrates processed and the grade of matte produced. Typically, matte grades of 55-75% result in conversion of 50-80% of the sulfur contained in the concentrates to sulfur oxides in the flash furnace.[8,63] Increasing the grade of matte increases the degree of sulfur removal in the furnace and thus shifts a portion of the sulfur removed in the copper converters to the flash furnace. It is not possible, however, to increase the degree of sulfur removal in the furnace above that level corresponding to the production of white metal (80% matte grade), since at this point the sulfur in excess of that amount necessary to recover the copper as a sulfide matte has been eliminated. Thus, the composition of the copper concentrates determines the maximum degree of sulfur removal in the flash furnace.

The concentration of sulfur dioxide in the off-gases from a flash furnace is normally in the range of 10-20%, depending on the grade of matte produced, the analysis of the concentrates processed, the degree of oxygen enrichment, and the degree of combustion air pre-heat. Generally, as the grade of matte, the degree of

oxygen enrichment and the degree of combustion air pre-heat increase, the concentration of sulfur dioxide in the furnace off-gases increases.[8,11] As the copper-to-sulfur ratio in the concentrates decreases, however, the concentration of sulfur dioxide in the off-gases increases if the grade of matte produced remains the same. In each of these cases, the increase in off-gas concentration is the result primarily of the increased heat released or heat availability, which shifts the flash combustion reactions closer to autogenous operation and thus reduces the need for auxiliary fuel. With a reduction in auxiliary fuel combustion, there is less dilution of the flash combustion off-gases, and the concentration of sulfur dioxide increases.

In the case of oxygen enrichment, however, the nitrogen content of the process atmosphere is reduced, and this contributes significantly to an increase in sulfur dioxide concentration. Indeed, through the use of pure oxygen rather than air, the concentration of sulfur dioxide can be increased to the range of 75-80%, as in the INCO flash furnace.

As a result, the use of flash furnaces for the smelting of copper concentrates offers a number of distinct advantages over reverberatory or electric furnace smelting in terms of the ease with which emissions of sulfur oxides can be controlled. The concentration of sulfur oxides in the off-gases is normally in the range of 10-14%.[10] The operation of a flash furnace is continuous and can even be termed a "steady-state" operation with respect to the flash combustion

reactions, the off-gas flow rate and the concentration of sulfur oxides in the off-gases. Consequently, the production of elemental sulfur or sulfuric acid from the flash furnace off-gases presents no unusual problems.

As discussed earlier, the oxygen in the process atmosphere of a flash furnace is consumed in the flash combustion reactions. Consequently, the furnace off-gases contain essentially no oxygen for the conversion of SO_2 to SO_3 if the off-gases are processed in a sulfuric acid plant. This deficiency is easily corrected, of course, by air dilution or by blending with other smelter off-gases, such as those from the copper converters.

If, however, elemental sulfur rather than sulfuric acid is manufactured, it is possible to take advantage of the high temperatures and lack of oxygen in the furnace off-gases to minimize the consumption of reductant through the use of technology developed by Outokumpu Oy. This technology takes advantage of the unique design of the Outokumpu flash furnace to eliminate the reduction furnace and a major portion of the gas cleaning section normally required in an elemental sulfur plant. Reductant is injected into the furnace off-gases in the flash furnace uptake shaft, and a major portion of the sulfur oxides is reduced to hydrogen sulfide and elemental sulfur. The gases are then cooled sufficiently to remove the dust entrained in the off-gases by an electrostatic precipitator, while maintaining the elemental sulfur in the vapor state. Following the precipitator, sulfur is condensed and the off-gases routed to a Claus-type elemental sulfur

plant, where elemental sulfur is produced by the reaction of hydrogen sulfide and sulfur dioxide.[8,64]

The flash smelting process was successfully demonstrated on a commercial scale by both Outokumpu Oy and INCO at about the same time, in the early 1950's. As of mid-1973, thirteen installations operated flash furnaces for the smelting of copper concentrates, ranging in capacity from about 300 tons/day to 1500 tons/day of copper concentrates. One was of the INCO design and the remaining twelve were of the Outokumpu design. The INCO furnace was located in Canada, and the twelve Outokumpu furnaces were located in Japan (five), Romania (one), India (one), Australia (two), Turkey (one), West Germany (one) and Finland (one). In the process of startup by early 1974 were four additional Outokumpu flash furnaces for the smelting of copper concentrates: one in Japan, one in India, one in Australia and one in Africa. Furthermore, in various stages of design or construction with startups planned in late 1974 or 1975 were two additional Outokumpu furnaces: one in Japan and one in the United States.[65,66]

It is apparent, therefore, that flash smelting furnaces can be used to make the copper smelting process more amenable to air pollution control. The concentration of sulfur dioxide in the furnace off-gases is high, normally in the range of 10-14%, and the process is "steady-state" with respect to the flash combustion reactions. As a result, there is very little fluctuation in the off-gas flow rate or the concentration of sulfur oxides. The production of high-grade mattes in the furnace results in conversion of up

to 80% of the sulfur contained in the concentrates to sulfur oxides in the furnace, thus minimizing the sulfur removed in the copper converters. With the major portion of the sulfur oxides resulting from the smelting of copper concentrates being discharged in the off-gases from the flash furnace, rather than in off-gases of low concentrations or with large fluctuations, the control of emissions is straightforward.

Concentrate Drying--

As previously discussed in Section 3.1.1.2, both the electric furnace and the flash furnace require a dry concentrate charge. The moisture content in the charge to the furnace must be no greater than 7 percent and is typically lowered to less than 0.5 percent.

There are a number of systems which can be used to dry copper concentrates, including converted multi-hearth roasters. The drying system most likely to be used at new domestic electric and flash smelting installations is, however, the rotary dryer. The rotary dryer is a rotating cylinder inclined to the horizontal with material fed into one end and discharged at the opposite end. Both the electric smelting installation of Inspiration Copper Company at Miami, Arizona, and the Phelps Dodge Corporation, Hidalgo County, Arizona, flash smelting installation will use rotary dryers.

In most common dryers, air or combustion gases flow co-current or countercurrent to the movement of the concentrate. Intimate contact between the drying gases and the concentrate is usually permitted. It is the contact of the drying gases and the concentrate which can present an air pollution problem. The movement of the gases through the dryer presents a very high potential for entrainment of the concentrate into the gas stream. It is estimated in the case of one new rotary dryer installation that up to 20 percent of the concentrate will be entrained in the emission stream.[97] Because of the high potential for air entrainment, emission gases from dryers are typically ducted to particulate control systems. One example of

a particulate control system on a concentrate dryer is the baghouse at the Inspiration Copper Co. smelter in Miami, Arizona.

3.1.1.3 Converting

Summary --

Copper converting is a batch operation with the concentration of sulfur dioxide in the converter off-gases dependent on whether the converter is in the slag-blowing mode or copper-blowing mode. Stoichiometric calculations indicate that the concentration of sulfur dioxide in converter off-gases should be in the range of 15% during slag blowing and in the range of 21% during copper blowing. However, air infiltration is frequently in the range of 200-300% or more and this results in typical off-gas concentrations of 1-1/2 to 5% sulfur dioxide. Consequently, major fluctuations in both converter off-gas volumes and sulfur dioxide concentrations occur frequently.

Maintaining converter off-gases suitable for the production of sulfuric acid is dependent on the reduction of air infiltration to a minimum and appropriate scheduling of individual converter operations. Tight-fitting hoods placed over converter mouths can reduce air infiltration to 80-100%. With air infiltration reduced to these levels, the concentration of sulfur dioxide in the converter off-gases can be maintained in the range of 5-8% during slag blowing and in the range of 10-13% during copper blowing.

Hoboken converters, however, unlike the conventional Pierce-Smith converter, do not require tight-fitting hoods to reduce air infiltration to a minimum. With two Hoboken converters in operation, only one of which is blowing at any time, converter off-gases averaging 8% sulfur dioxide can be expected. If three converters are in operation, with

only two blowing at the same time, converter off-gases averaging 9% sulfur dioxide can be expected.

Oxygen enrichment of the converter blowing air can also be used to some extent to overcome the dilution effect of air infiltration. An increase in the oxygen content of the blowing air results in a corresponding increase of the same magnitude in the concentration of sulfur dioxide in the converter off-gases.

Minimizing the fluctuations in converter off-gas flow rates and sulfur dioxide concentrations requires appropriate scheduling of individual converter operations. The same number of converters must be blowing at all times. At any time a converter must rotate to pour slag or blister copper, or accept fresh charges of matte or fluxing materials, another converter must be ready to commence blowing. This requires that one converter be maintained in a standby condition, hot and charged with matte, ready to commence blowing.

General discussion --

The copper converting process is essentially an adaption of the Bessemer process developed by the steel industry for converting high-carbon pig iron to low-carbon iron alloys. Whether produced in a reverberatory, electric or flash smelting furnace, molten copper sulfide matte consists of a copper/iron/sulfur melt containing small amounts of other elements and precious metals. At this point, all of the rock or gangue and a portion of the iron contained in the copper concentrates has been eliminated. Copper converters are utilized to remove the iron remaining in the matte and then to convert the copper sulfide in the matte to copper. This is accomplished by adding siliceous

fluxes to the molten matte and then blowing air through the matte to oxidize the iron sulfides to iron oxides. An iron oxide slag is formed and removed from the converter, leaving copper sulfide or white metal. Blowing is continued and the copper sulfides are oxidized to blister copper.

Copper converting is a batch operation. As shown in Figure 3-13, the side blown converter—known as a Pierce-Smith converter—is a horizontal, refractory-lined steel cylinder with an opening in the side which functions as the converter mouth. The converter can rotate about its major axis, swinging the converter mouth through an arc of about 120° from the vertical. Compressed air or oxygen-enriched air is supplied to the converter through a header along the back of the converter, from which a horizontal row of tuyeres provide passages through the converter shell into the interior. Molten matte produced in the smelting furnace is charged to the converter through the converter mouth by ladles, using overhead cranes. For charging, the converter is rotated to bring the converter mouth to an angle of about 60° from the vertical (as shown in Figure 3-14). Molten matte is poured from the ladle through the converter mouth, filling the converter about half full. Silica fluxing materials are also charged to the converter through the converter mouth or through one end of the converter, as shown in Figure 3-13. With the converter in the charging position, the tuyeres are above the level of the matte. Following charging of the matte and fluxing materials, air or oxygen-enriched air is supplied under pressure to the tuyere line, and blowing commences. The converter is then rotated, as shown in Figure 3-14, swinging the converter mouth to

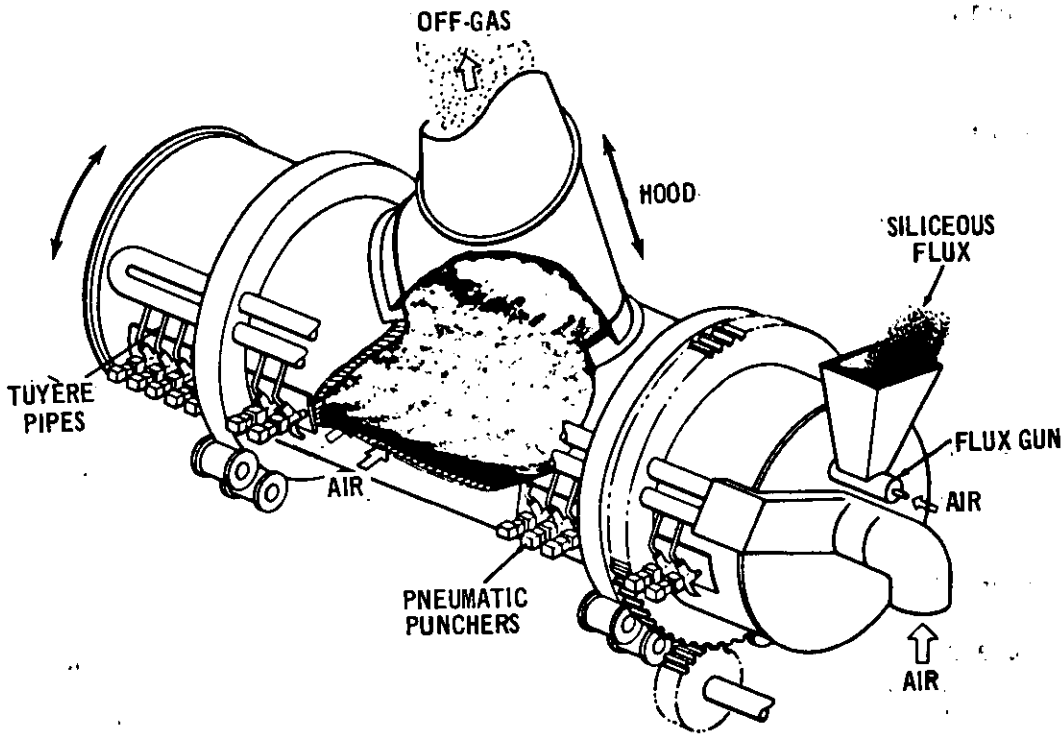

Figure 3-13 Copper converter.[2]

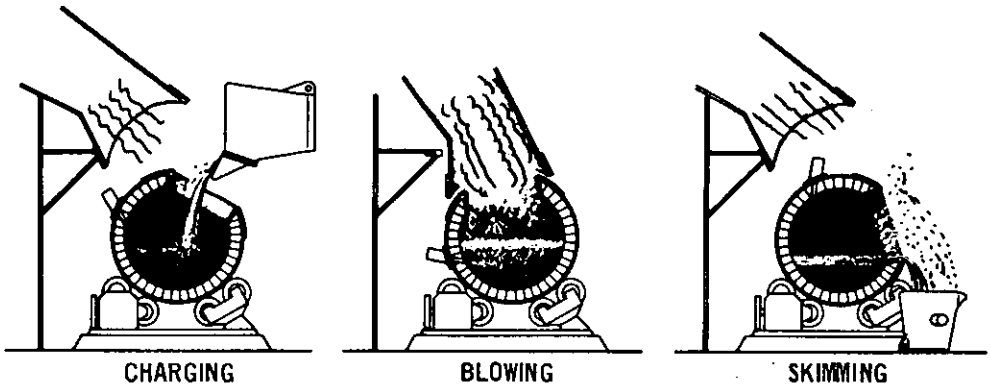

Figure 3-14 Copper converter operation.[2]

the vertical and submerging the tuyeres to a depth of 6 to 24 inches below the surface of the matte.

As air blown into the converter enters the molten matte, the matte in the immediate area of the tuyeres is cooled, forming accretions which obstruct the tuyere openings. To prevent complete obstruction of these openings, the tuyeres are mechanically cleaned every two or three minutes by forcing an iron bar through each tuyere passage.

As the tuyere air passes through the matte in the converter, the iron sulfides contained in the matte are converted to iron oxides and sulfur oxides. The iron oxides combine with the siliceous fluxing materials forming an iron oxide slag, and the sulfur oxides are removed in the converter gases discharged through the converter mouth. This stage of the converter cycle operation is termed the slag blow.

Blowing is continued until a substantial layer of slag is formed in the converter. The converter is then rotated, as shown in Figure 3-14, swinging the converter mouth through an arc of about 120° from the vertical, raising the tuyere line above the surface of the molten bath. The air supply to the tuyere line is shut off and the blowing discontinued. Slag is skimmed or poured from the converter into a ladle and returned to the smelting furnace or transferred to slag treatment facilities for the recovery of copper contained in the slag. The converter is then rotated to the charging position, and fresh matte, fluxing materials and cold supplements, such as smelter reverts and copper scrap, are added to bring the converter charge back to the working level. Blowing is resumed and the converter rotated to the working position.

This process is repeated until a charge of copper sulfide is accumulated in the converter, filling it to the working level. The converter is then rotated to the blowing position, and the copper blow or finish blow begins. During this stage of the converter cycle, the copper sulfide (white metal) is oxidized, forming sulfur dioxide and copper. Following the copper blow, the converter contains only metallic copper known as blister copper which is approximately 99% pure. The converter is rotated to the pouring or skimming position and the blister copper poured into ladles for transfer either to casting facilities or refining facilities. The emptied converter is then charged with fresh matte and fluxing materials, and the converting cycle repeated.

Generally within the domestic copper industry, two or three converters are associated with each smelting furnace.[4] Depending on the grade of matte used in the smelting furnace, a converter may make one to three cycles in a 24-hour period, with the actual blowing time comprising about 70-75% of the cycle as shown:[67]

Matte Grade (%)	Blowing Interruptions (hr)	Cycle Time (hr)	Converter Utilization (%)
30	4.3	17.6	75
40	3.2	12.0	73
50	2.5	8.8	71

During the slag blow, each blowing period lasts about 45-60 min. Following each blowing period as mentioned above, slag is poured from the converter, and fresh matte and cold supplements are charged. The intervals between blowing periods last about 15-20 min.[67] Completion of slag blowing can be identified by various techniques. One technique used by converter operators is observation of the color of the flame

coming from the converter mouth. Slag blowing is complete when the blue coloring of the flame pales. Also, a sample of matte taken at this point is boiling and forms bubbles.[67] Another technique is observation of converter off-gas sulfur dioxide content. At the end of the slag blow, the sulfur dioxide concentration rises sharply.[67] Normally with low-grade mattes of 30-40% copper, which are typical of those produced within the domestic industry, slag blowing comprises about 80-90% of the total converter cycle.[4, 67]

The copper converting process is autogenous. Consequently, no fuel or other source of energy is required to maintain the converter bath in a molten state. However, more heat is released within the converter during the slag blow than during the copper blow. The oxidation of one pound of ferrous sulfide according to the following reaction releases about 2600 BTU:

$$2FeS + 3O_2 + SiO_2 \rightarrow 2FeO \cdot SiO_2 + 2SO_2$$

while the oxidation of one pound of cupric sulfide according to the following reaction releases only about 600 BTU:

$$Cu_2S + O_2 \rightarrow 2Cu + SO_2$$

Thus, the amount of heat released during the slag blow is more than sufficient to keep the bath in a molten state and compensate for heat losses. Indeed, converter operators must control the converter temperature to prevent damage to the refractory lining during the slag blow. Smelter reverts, copper scrap and, in some cases, copper concentrates are charged to the converters to both take advantage of the excessive heat released and to lower converter temperatures. Consequently, with low-grade mattes it is possible for copper scrap charged to the converter to be a significant source of the

blister copper produced at a primary copper smelter. Indeed, Bureau of Mines statistics indicate that of the 1.60 MM tons/yr of copper produced at primary copper smelters, some 0.35 MM tons/yr or about 20% is due to the recovery of copper from scrap.[49]

Stoichiometric calculations indicate that the concentration of sulfur dioxide in converter off-gases should be in the range of 15% during the slag blow, assuming that 25% of the iron sulfide is oxidized to magnetite in the iron oxide slag, and in the range of 21% during the finish blow.[5] In practice, however, the concentrations depend on the oxygen utilization in the converter and the amount of air infiltration into the off-gas collection system. Oxygen utilization is reported in the literature to be generally in the range of 85 to 95%, although one rather extensive study reported oxygen utilizations varying from 45 to 105% during slag blowing and from 40 to 70% during copper blowing.[68] Normally, however, air infiltration into the hoods and the flues of the off-gas collection system is from 100-300%[4,5,69] and, as a result, is assumed to be primarily responsible for sulfur dioxide concentrations in the off-gases of less than that shown by stoichiometric calculations.

Since the copper converting operation is a batch operation with the concentration of sulfur dioxide in the off-gases dependent on whether the copper converter is in the slag blowing mode or copper blowing mode, fluctuations in both off-gas volume and sulfur dioxide concentration occur. The magnitude of these fluctuations is significant, as shown in Figure 3-15.[70] Consequently, maintaining the concentration of sulfur dioxide in converter off-gases suitable for the production of sulfuric acid is dependent primarily on the reduction of air infiltration to a minimum and appropriate scheduling of the

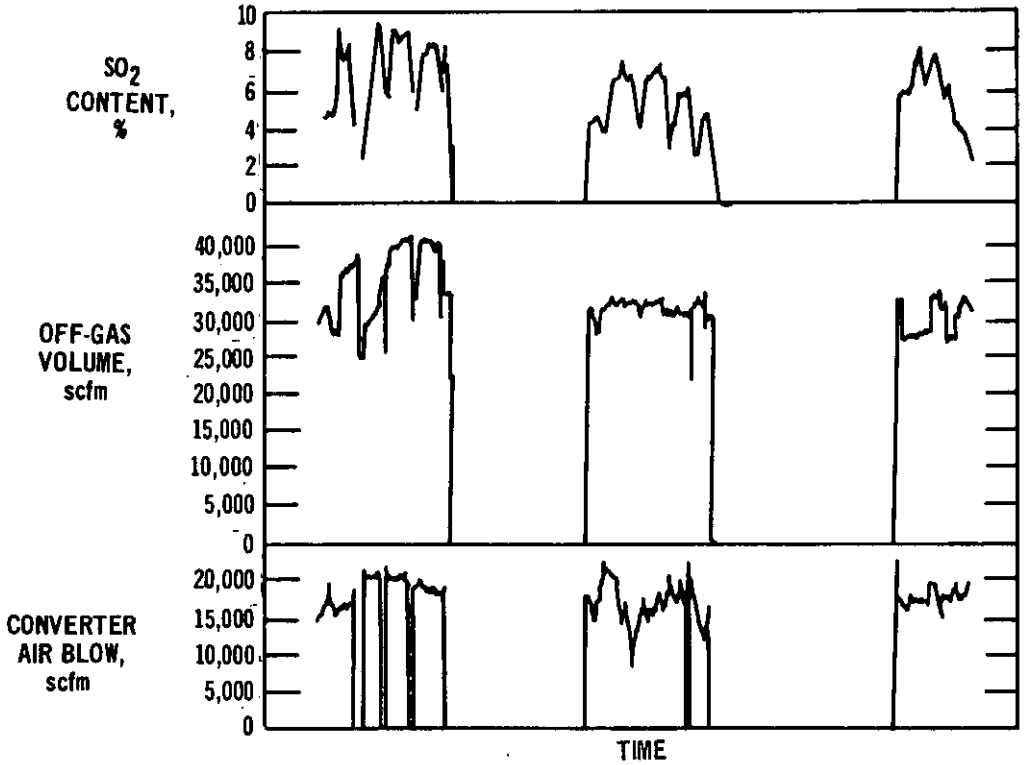

Figure 3-15 Fluctuations in converter off-gas volume and sulfur dioxide concentrations.[70]

operations of individual converters to minimize fluctuations.

The use of tight-fitting hoods, as shown in Figure 3-16, placed over the converter mouth is one approach to minimizing air infiltration. Converter hoods, however, cannot be physically tight. Thus, even with tight-fitting hoods, there is some air infiltration into the hood flue system and this is controlled by appropriate regulation of the draft on the flue system.[5,70] Consequently, dampers or individual hot gas fans for each converter are required. In practice, the reduction of air infiltration to the level of 80 to 100% is about the best that has been achieved.[5,70] With air infiltration reduced to these levels, many Japanese smelters which have incorporated tight-fitting hoods on their copper converters are able to maintain the concentration of sulfur dioxide in the converter off-gases during slag blowing in the range of 5-8% and during copper blowing in the range of 10-13%.[22, 50, 71]

Another approach to minimizing air infiltration is through the use of Hoboken converters. In Pierce-Smith converters most of the gases pass into an off-gas collection hood through the mouth of the converter. Although the Hoboken converter is essentially the same as a conventional Pierce-Smith converter, this converter is fitted with a side flue located at one end of the converter and shaped as an inverted U, as shown in Figure 3-17. The inverted U-shaped flue rotates with the converter and is fitted with a cylindrical duct, also rotating with the converter, which leads into a fixed vertical flue. This flue arrangement permits siphoning of the converter gases from the interior of the converter directly to the off-gas collection system.[72]

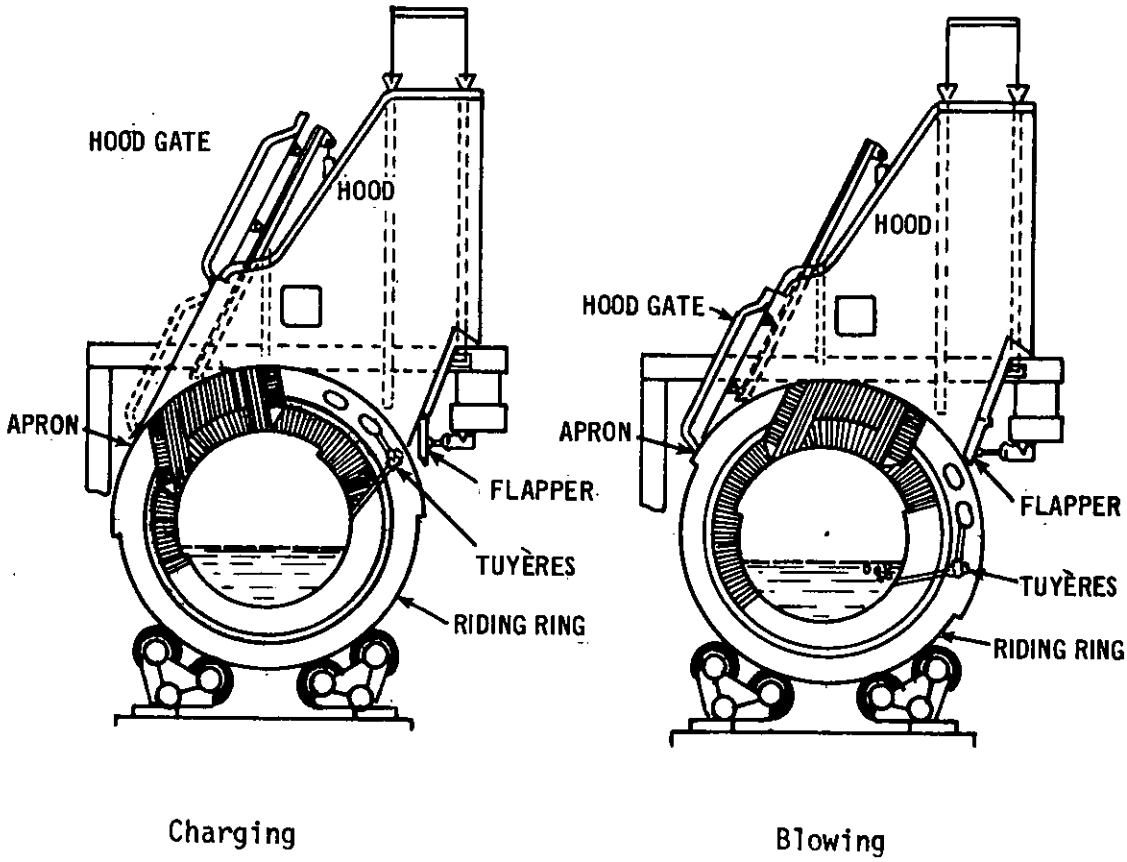

Figure 3-16 Converter hood.[70]

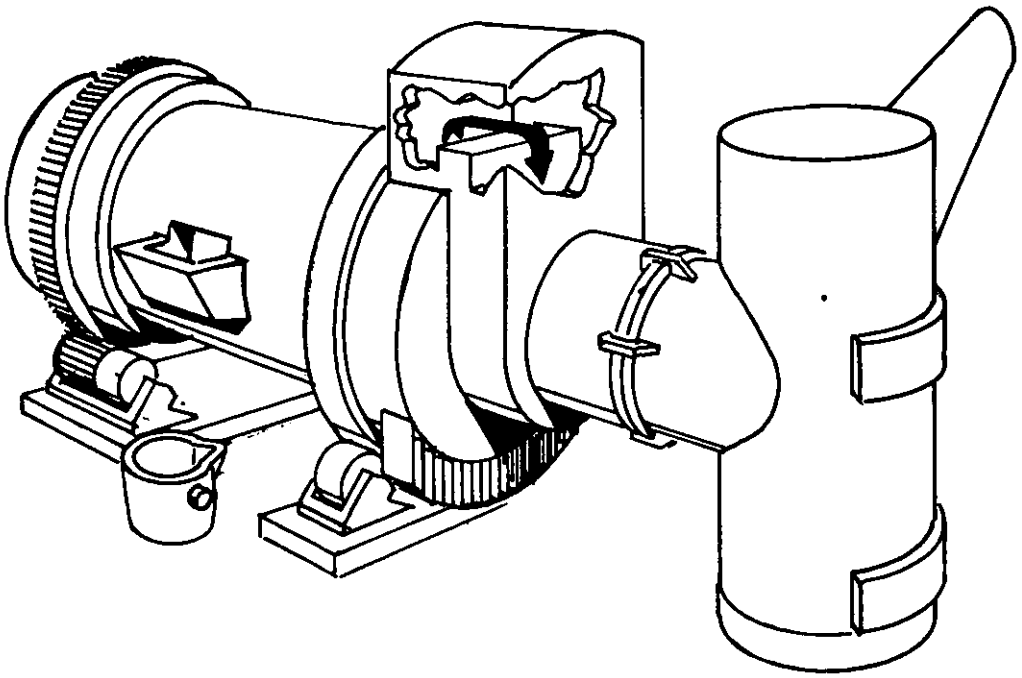

Figure 3-17 Hoboken converter.[72]

The escape of converter off-gases through the mouth of the Hoboken converter or the dilution of converter off-gases by air infiltration through the converter mouth is minimized by maintaining a constant zero draft at the converter mouth through the use of variable-speed fans and dampers. With two converters in operation, only one of which is blowing at any time, personnel at Metallurgie Hoboken, N.V., in Belgium, where the Hoboken converter was developed, indicate that converter off-gases averaging 8% sulfur dioxide can be expected. If three converters are in operation, with only two blowing at the same time, converter off-gases averaging 9% sulfur dioxide can be expected.[72]

Oxygen enrichment of the converter blowing air can be used to overcome, to some extent, the dilution effects of air infiltration. The use of oxygen in copper converting operations is rapidly gaining acceptance both in the domestic and foreign industry. The major incentive for oxygen enrichment of the blowing air is the increase in copper converting capacity which results. Since nitrogen comprises four-fifths of the blowing air normally supplied, oxygen enrichment of the blowing air lowers the total volume of air which must be provided per unit of copper. This is significant in that four tons of nitrogen carry away enough heat to smelt a ton of copper concentrates.[12]

In terms of overcoming the dilution effects of air infiltration, however, a number of investigations have shown that an increase in the oxygen content of the blowing air results directly in a corresponding increase of the same magnitude in the concentration of sulfur dioxide in the converter off-gases.[73] For example, at

the Metallurgie Hoboken, N.V., smelting installation in Belgium, oxygen enrichment of the blowing air to 25% oxygen, an increase of about 25%, resulted in an increase in the concentration of sulfur dioxide in the converter off-gases over the complete converter cycle from 8-1/2% to about 10-1/2%, also an increase of about 25%.[74]

Another investigation at the Anaconda Company's Anaconda, Montana, smelter showed that an increase in oxygen content of the blowing air from 25-1/2% to about 42% resulted in an increase in sulfur dioxide concentration of converter off-gases during slag blowing at the converter mouth before significant air infiltration from about 16-1/2% to about 28%.[73] In this case, an increase in oxygen content of the blowing air by about 65% resulted in an increase in sulfur dioxide concentration of the converter off-gases at the converter mouth by about 70%.

In addition, another investigation at the Kennecott Copper Corporation's Utah copper smelter showed that oxygen enrichment of the blowing air to 23-36% oxygen increased sulfur dioxide concentrations in the converter off-gases from normal levels of 4-5% to 6-1/2 to 9-1/2% sulfur dioxide.[75] The Kennecott investigation is of particular interest. In addition to confirming a major increase in copper converting capacity, few problems were experienced and on the basis of their investigations, Kennecott installed an on-site oxygen plant to supply commercial oxygen to the copper converters.[75] This installation is still in use today.[76]

As a result, it is clear that oxygen enrichment of the converter blowing air can be utilized to some extent to overcome the dilution effects of air infiltration into converter off-gases.

In terms of minimizing the fluctuations in converter off-gas flow rates and sulfur dioxide concentrations, appropriate scheduling of individual converter operations is necessary. This requires essentially that the same number of converters be blowing at all times. Also, at any time a converter must rotate to pour slag or blister copper or accept fresh charges of matte or fluxing materials, another converter must be ready to commence blowing. As a result, this requires that at least one converter must be maintained in a standby condition, hot and charged with matte, ready to commence blowing. Furthermore, the blowing rate during the slag blow should be higher than the blowing rate during the finish blow to compensate for the lower off-gas volumes produced during slag blowing, as the result of the loss of oxygen to the slag-forming reactions.[5]

Automation of copper converters has been slow within the domestic smelting industry. As discussed earlier, the converting operation has been controlled visually by the operator observing the color of the converter flame. In the future, however, smelters will have to utilize automatic analysis of their various feeds and products. On the basis of smelting capacity, converting capacity, concentrate analysis and matte grade, computers will be used to project converter air blowing rates and a schedule for multi-converter operation.[5]

Converter air blowers will have to be instrumented for constant volume operation. Continuous measurement of individual converter off-gas compositions and gas temperatures will have to be collected to monitor the progress of the converter operation. The oxygen and

nitrogen concentrations will be used to indicate oxygen efficiency, and the sulfur dioxide concentration with the gas temperature will indicate air infiltration. The sulfur dioxide concentration will also be used to indicate the end of the blows and signal the next step of the schedule.[5]

3.1.1.4 Emission Stream Blending

Summary--

The blending of emission streams at copper smelters is a viable option in some instances to making weak SO_2 streams from reverberatory furnaces amenable to SO_2 control. The technique consists of mixing the weak SO_2 emission stream from a reverberatory smelting furnace with those of higher SO_2 concentration from roasters and converters to obtain an emission stream of higher SO_2 concentration. In some instances, the resulting emission stream will have sufficiently high SO_2 and oxygen concentrations to allow the use of sulfuric acid plants as emission control devices.

Mixing to achieve a strong SO_2 stream appears most favorable for those smelters which use all the three basic operations of roasting, smelting and converting. Concentrations of greater than 4.2 percent are estimated in these cases. For smelters which use green-charge smelting furnaces (no roasting), the attainment of a blended strong SO_2 stream appears more difficult and in some cases may not be possible unless additional techniques such as oxygen enrichment are also used. In the case of green-charge smelters, the success of blending is dependent primarily upon the SO_2 concentration from the converters and hence the amount of air dilution into the gas stream. The technique is considered feasible in those instances in which the average SO_2 concentration can be maintained sufficiently high either by operating enough converters or by decreasing the air inleakage into the converter stream.

Discussion--

A technically feasible technique which can be employed in some copper smelting situations to aid in the control of SO_2 emissions is blending of weak and strong SO_2 streams with the objective of obtaining a strong blended SO_2 stream. To date, only the copper smelter in Bor, Yugoslavia, is reported to use gas blending to enhance SO_2 emission control.[98] By mixing gases from its roasters, reverberatory furnace, and converters, the Bor smelter is able to control from 80 to 85 percent of the input sulfur to the smelter with sulfuric acid plants. Upon completion of the installation of Hoboken-type converters, discussed in Section 3.1.1.3, the percentage of control is expected to increase to 95 percent.[98]

To evaluate quantitatively the feasibility of gas stream mixing, it is necessary to review the gas stream characteristics of typical smelting operations. The two smelting operations of importance in the discussion are those which use roasters and those which do not use roasters. Figure IX-1 in Appendix IX shows a typical smelting situation which uses a fluid-bed roaster, reverberatory furnace, and three copper converters. On an ideal basis, assuming no air dilution, a stream generated by mixing the gas streams would have an SO_2 concentration of 7.1 percent. It is necessary, however, to consider the practical situation where it is impossible to prevent some air inleakage into the emission streams, and excess oxygen must be present to ensure efficient operation of sulfuric acid plants. Providing the needed oxygen with dilution air would naturally reduce the resulting SO_2 concentration. The resulting emission

streams shown in Figure IX-1 of Appendix IX take into account these factors to a reasonable degree by including 25 percent excess air in the roaster emission stream, 30 percent excess air in the reverberatory furnace emission stream, and 100 percent excess air in the converter emission stream. These values are conservative but may be obtained by using tight hooding and properly maintaining ductwork. An SO_2 concentration of between 4.25 and 5.75 percent can be maintained throughout the smelting operation. Therefore, even with the addition of dilution air, it is feasible to obtain a strong SO_2 stream from mixing the emission streams from a typical calcine-charge smelting operation.

In Figure IX-2 of Appendix IX, a model of a typical green-charge smelting operation is shown. This operation presents a less favorable situation for gas mixing than the previous operation since the continuous high SO_2 concentration gas stream from a fluid-bed roaster is not present. With similar allowances for air inleakage into the reverberatory furnace and converter emission streams as made above, the SO_2 concentration of the blended stream ranges between 3.18 and 4.74 percent SO_2 for approximately 23 hours per day. This situation could be improved with the addition of more converters or with the further reduction of air inleakage. In any case, however, the resulting gas stream will be near the threshold value for typical strong gas stream control systems.

Thus, it is possible to use gas mixing to obtain strong SO_2 streams in some instances, particularly where fluid-bed roasters

are used. It is doubtful, however, that the technique is universally applicable to conventional green-charge smelting operations. In those cases the ability to achieve and maintain a sufficiently high SO_2 concentration is subject to a number of variables such as concentrate composition, type of smelting (bath v. sidewall) and amount of converter slag treatment, all of which are discussed in Section 3.1.1.3. Neither of these variables nor the use of techniques such as oxygen enrichment have not been taken into account in the above calculations of material flow for typical smelting operations.

3.1.1.5 Copper Refining

Summary--

According to Bureau of Mines statistics, about 1.45 MM tons/yr, or about 90% of the 1.60 MM tons/yr of copper produced by the domestic primary copper smelting industry, is marketed as electrolytic-grade copper. Most of the properties of electrolytic-grade copper are adversely affected to some degree by metallic impurity contamination; however, electrical conductivity is more sensitive to the presence of impurities than various mechanical properties. Electrolytic-grade copper which meets ASTM standards placed on electrical conductivity is of such purity that the associated mechanical properties and hot and cold working characteristics are excellent.

All metallic impurities lower the electrical conductivity of copper to some extent. However, in typical electrolytic-grade copper, those impurities which are of prime interest concerning electrical conductivity are arsenic, antimony and nickel. The effect of other impurities on electrical conductivity is minimal compared to the effect of these impurities on electrical conductivity.

Fire-refining techniques can eliminate many impurities. However, electrolytic refining is necessary to recover precious metals such as gold and silver. In many cases fire-refining precedes electrolytic refining and serves as a means to eliminate gross impurities.

Arsenic and antimony can essentially be eliminated through the use of fire-refining, and arsenic, antimony and nickel can also essentially be eliminated through the use of electrolytic refining.

The fact that metallic impurities are found in copper cathodes following electrolytic refining is due mainly to mechanical occlusion

of slimes and electrolyte solution during copper deposition. Fire-refining can be used to eliminate many of the impurities which form slimes and muds and which accumulate in the electrolyte, thus minimizing the effect of slime and electrolyte occlusion.

In general, with regard to metallic impurities, such techniques as increased fire-refining, increased copper refinery electrolyte solution purification, decreased current density in the electrolytic cells, a change to top-to-bottom circulation of electrolyte in the cells, and the use of periodic reversal of the current during electrolysis should be adequate to insure their elimination. Consequently, it appears that should impurity levels in blister copper increase as a result of the utilization of new smelting technology within the domestic smelting industry to meet the proposed NSPS, copper refining techniques appear adequate to insure little or no increase in the impurity content of electrolytic-grade copper.

General discussion--

Before examining the techniques of impurity elimination during copper refining, it is pertinent to review the effect of impurities on the various properties of copper. Electrical conductivity appears to be more sensitive to the presence of impurities than various mechanical properties such as annealing point, tensile strength, and ductility, which determine the hot and cold working characteristics of copper. Indeed, electrolytic-grade copper which meets ASTM standards placed on electrical conductivity is of such purity that the associated mechanical properties and hot and cold working characteristics are normally excellent.[77] Consequently, this discussion will focus primarily on the effects of impurities on electrical conductivity.

All impurities lower the electrical conductivity of copper to some extent. However, the effect of most impurities on electrical conductivity is particularly severe in "oxygen-free" copper, which is a specialty high-grade electrolytic copper. In general, impurities which enter into solid solution with copper adversely affect electrical conductivity. Most harmful are iron, phosphorus, silicon, arsenic, antimony, aluminum, tin, zinc and nickel.[67,72] Other impurities such as bismuth, lead, cadmium, selenium and tellurium do reduce electrical conductivity to some degree, although their effect is minimal in comparison.[77]

"Oxygen-free" copper, however, is not widely produced or marketed within the United States. Indeed, only one company, U.S. Metals Refining (American Metals Climax) in Carteret, N.J., is presently engaged in the production and marketing of this specialty-grade copper.[78] Thus, "oxygen-free" copper represents only a small fraction of the copper produced and marketed in the United States, and it appears that typical electrolytic-grade copper is adequate for most applications in which electrical conductivity is of importance.

Typical electrolytic-grade copper, however, contains some oxygen and in the presence of oxygen, the adverse effect of many impurities on electrical conductivity is negated.[67,77] This is explained by the oxidation of various impurities to their oxides which are not soluble in copper. These oxides precipitate from the copper in inert form and therefore have little effect on electrical conductivity. Insoluble oxides do displace copper, and although the loss of conductivity as a result of this is small compared to the loss of conductivity resulting

from the presence of arsenic, for example, this loss is measurable when the oxide is present to the extent of 0.01%.[77]

Impurities which form insoluble oxides are iron, phosphorus, silicon, aluminum, tin, and zinc.[77] Antimony and bismuth also form insoluble oxides; however, these oxides are unstable above about 1300°F. The presence of antimony can have an adverse effect on electrical conductivity, but the presence of bismuth has little effect.[77] Thus, those impurities which appear to be of prime interest concerning electrical conductivity are arsenic, antimony and nickel.

Copper refining can refer to either fire-refining or electrolytic-refining operations. Although fire-refining techniques can eliminate many impurities present in blister copper, precious metals such as gold and silver cannot be recovered. The extraction of previous metals and the elimination of essentially all impurities (to 99.95-99.97% copper) requires electrolytic refining. Thus, although some domestic copper is produced and marketed as fire-refined copper, somewhat over 1.4 MM tons/yr, or about 90% of the 1.6 MM tons/yr of copper produced within the domestic primary smelting industry, is marketed as electrolytic copper.[49] However, fire-refining frequently precedes electrolytic refining and serves as a means of eliminating gross impurities which might be present.

The removal of impurities by fire-refining is similar to the operation of copper converters in that the impurities are oxidized and removed by volatilization or slagging.[79] Fire-refining also consists of two stages, an oxidation stage and a reduction stage. A number of different types of fire-refining furnaces exists although the most common type employed at domestic primary copper smelters is similar in construction to a copper converter. The fire-refining process is not

autogenous, however, and consequently, natural gas burners are positioned above the furnace mouth or project through the ends of the vessel. These burners maintain the copper in a molten state.

During the oxidation stage, air is blown through the molten bath, and slags containing various impurities are removed as necessary. The blowing continues until the copper is saturated with copper oxide. This is determined visually by observing the color of the slag and the structure and color of a cooled, solidified sample of the copper. Initially, the slag is dark and as refining progresses, it changes to "brick-red." A cooled and solidified sample of the copper is also a "brick-red" color and upon breaking reveals a large-grained prismic structure.[67]

When the oxidation stage is completed, the reduction stage commences. During this stage, hydrogen or natural gas is blown through the molten bath until most of the copper oxide in the molten bath is reduced to copper. This is also determined visually by observation of the color and structure of a cooled, solidified sample of copper. The "brick-red" color becomes "pink-red," the sample has a level-set surface, and a break has a silky reflection.[67]

Following reduction, the copper is cast into billets, slabs or, most frequently, into anodes for electrolytic refining.

During the oxidization stage a few impurities such as cadmium and zinc are removed by volatilization.[79] However, most impurities are removed by oxidation and slagging. Magnesium, aluminum, iron and cobalt are readily removed by these means, forming silicate slags.[67,79] Tin can be eliminated through the use of basic slags. Although arsenic and antimony are not significantly reduced by normal

fire-refining techniques, if after completion of normal slagging soda ash and lime are charged to the fire-refining furnace, they may be slagged away with almost complete removal following successive treatments.[67,79] Selenium and tellurium may also be removed through the use of a soda ash-lime-coal flux, followed by slagging.[79]

Nickel, bismuth and lead, however, are persistent impurities, although lead removal is favored by acid slags.[67,79] Consequently, of those impurities cited earlier--arsenic, antimony and nickel--which appear to be of prime interest concerning electrical conductivity, only nickel appears to be a persistent impurity remaining following fire-refining.

The elimination of impurities and the recovery of precious metals by electrolytic refining depends on the separation of copper from other metals by electrolysis in a bath or electrolyte, which is basically a solution of copper sulfate and sulfuric acid. Metallic impurities which are electropositive with respect to copper do not enter the electrolyte but precipitate from solution, forming a slime or mud. Metallic impurities which are electronegative with respect to copper and which enter the electrolyte frequently combine with other ions in solution to form insoluble compounds and precipitate out of solution, or, being less electropositive than copper, remain in solution. To prevent the accumulation of these impurities in solution, a portion of the electrolyte is continuously withdrawn and processed through electrolyte purification facilities.[80]

Silver, gold, platinum and palladium are more electropositive than copper and, as a result, could deposit at the cathode if they entered the electrolyte solution. However, only silver enters the

electrolyte to any extent, and chlorine added to the electrolyte in the form of salt or acid precipitates silver in solution as silver chloride. Consequently, as the copper anode dissolves, silver, gold, platinum and palladium form slimes or muds at the bottom of the electrolytic cells.[81,82]

Selenium and tellurium present in anode copper are in the form of silver selenide and silver telluride. Both of these compounds are insoluble in the acid electrolyte and as the anode dissolves, they settle to the bottom of the electrolytic tanks and enter the mud or slime.[81,82]

Arsenic, antimony and bismuth are only slightly electronegative with respect to copper and enter the electrolyte to the extent of their solubility. The solubility of antimony and bismuth in the electrolyte is quite limited, although this is not the case with arsenic.[81] Potentially, these three impurities could deposit at the cathode since they are between hydrogen and copper in the electromotive series and their electromotive potentials are quite close to that of copper. The electromotive potential of copper is +0.34 volts (Cu/Cu^{++}) and +0.51 volts (Cu/Cu^{+}) while those of arsenic, bismuth, and antimony are +0.30 volts (As/As^{+++}), +0.20 volts (Bi/Bi^{+++}) and +0.10 volts (Sb/Sb^{+++}), respectively.[67]

Under normal conditions in electrolytic refining, however, there is little danger of depositing these metals at the copper cathode. Metals depositing at the cathode are controlled by the law of mass action: all other conditions equal, the metal whose ions are present in the greatest amount is most likely to deposit. Thus, the concentration of copper in the electrolyte, rather than the concentration of arsenic,

antimony or bismuth, is the major factor in determining the electrolytic deposition of these metals on the copper cathode.[80,81] Under normal conditions of electrolyte temperature, circulation and current density within electrolytic cells, it has been estimated that electrolytic deposition of arsenic, antimony or bismuth will not occur until the copper content of the electrolyte drops to less than 10 grams per liter.[81] Normally, electrolytic refining solutions contain in the range of 40 grams per liter of copper, thus providing a considerable margin of safety.[81]

Other metallic impurities such as lead, tin, nickel, cobalt, iron and zinc are more electronegative than copper and readily enter the electrolyte. Lead and tin, however, form insoluble sulfates and precipitate from solution.[81,82] Nickel, cobalt, iron and zinc, on the other hand, accumulate in the electrolyte. However, there is little danger of electrolytic deposition of these impurities on the copper cathode unless their concentration in the electrolyte approaches that of copper.[81] The electromotive potentials of nickel, cobalt, iron and zinc [-0.23 volts (Ni/Ni^{++}), -0.29 volts (Co/Co^{++}), -0.44 volts (Fe/Fe^{++}) and -0.76 volts (Zn/Zn^{++}), respectively][67] are sufficiently electronegative to copper to retard their electrolytic desposition at the cathode under normal conditions.

If the electrolyte solution is not periodically purified and regenerated, however, these soluble metallic impurities discussed above could build up to the point where they would begin to electrolytically deposit on the cathode. Thus, to maintain the concentration of metallic impurities below these levels, a portion of the electrolyte is continuously withdrawn for purification. Copper is recovered from the foul electrolyte by

concentration on scrap iron, or concentration of the solution by evaporation, followed by crystallization. The metallic impurities are then removed or recovered from the remaining electrolyte solution by electrolysis and/or further concentration of the solution by evaporation followed by crystallization. Consequently, soluble metallic impurities, such as iron, nickel, bismuth, arsenic, antimony, and cobalt, are kept from building up in the electrolytic refining circuit.[80,81,83]

Although the electrolytic deposition of metallic impurities can be controlled as discussed above, this does not guarantee that increased anode copper impurities will not lead to increased cathode copper impurities. Generally speaking, increased anode impurity level will result in increased cathode impurity level, although the percentage increase in cathode impurity level decreases with increased impurity level in the anode.[81] The fact that metallic impurities are found in copper cathodes is due mainly, if not entirely, to the fact that small amounts of electrolyte and slimes become occluded in the cathode deposit.[80,81] Most slimes are very slow in settling from solution and, thus, the electrolyte frequently contains a fine suspension of slime precipitate. Furthermore, some metallic impurities such as arsenic, antimony and bismuth tend to form floating slimes which are frequently a source of cathode copper contamination.[81]

A number of techniques can be utilized to reduce or minimize slime and electrolyte occlusion, however. As discussed earlier, fire-refining can be utilized to essentially eliminate arsenic, antimony, selenium, tellurium and zinc, thus minimizing the formation of both floating and settling slimes and muds. In addition, metallic impurities such as tin, cobalt and iron can also be eliminated through fire-

refining. The concentration of these soluble impurities in the electrolyte could, therefore, be minimized, thus minimizing the effect of electrolyte occlusion on the impurity content of cathode copper.

Top-to-bottom circulation of the electrolyte solution in the electrolytic cells could also be employed. Normally, this results in a general improvement with regard to copper cathode contamination. Electrolyte circulation is essential to maintain proper temperatures and prevent stratification. In most refineries, electrolyte enters at the base of the cells and is withdrawn from the top. Thus, the direction of circulation hinders the settling of slime. In several major copper refineries, top-to-bottom circulation is employed and they report fewer problems with regard to cathode contamination and trouble from float slime.[81]

Techniques utilized to improve the density and smoothness of the copper deposits would also tend to minimize slime and electrolyte occlusion in cathode copper. Any condition or practice promoting rapid and open or coarse-grained electrolytic deposition of copper on the cathode tends to result in a high degree of mechanical entrainment of slime and electrolyte. Thus, decreased current densities, for example, would tend to reduce cathode impurity levels, although the size of the required refining installation would have to increase to compensate for the loss in capacity resulting from the increased time requirements for refining.[80,81]

Glue and other electrolyte additives, such as sulfite lignone liquor and sulfonated petroleum products, can also be used to some extent to reduce cathode contamination. Although each refinery typically develops its own combination of additives, glue is used

by all. Additives improve the density and smoothness of the copper deposits by promoting fine-grained deposits of copper, thus minimizing mechanical entrainment of slime and electrolyte.[81]

With regard to promoting dense, even fine-grained copper deposition at the cathode, a recent advance in the technology of electrolytic copper refining promises to reduce cathode contamination. Developed in Bulgaria at the Zlatitsa-Pirdop copper refinery, this advance involves the use of periodic reversal of the current direction in the electrolytic cell.[84] At this time, the Mufulira Copper Mines, Ltd., copper refinery in Zambia and the Boliden Aktiebolag, Ronnskar, Works copper refinery in Sweden are incorporating this technology into their copper refining operations.[28,85] Periodic reversal of the current direction is claimed to promote uniform copper deposition and to result in even and dense copper deposition, thus minimizing slime and electrolyte occlusion.[84,85]

In conclusion, with regard to those impurities cited earlier--arsenic, antimony and nickel--which appear to be of prime interest concerning electrical conductivity, it appears that copper refining techniques are likely to be adequate to insure their elimination in most cases, should their level in blister copper increase as a result of the utilization of new smelting technology or smelting modifications by the domestic smelting industry to meet the proposed NSPS. Arsenic and antimony can be eliminated through fire-refining and nickel can be eliminated through electrolytic refining. With regard to other impurities, in general such techniques as increased fire-refining, increased copper refinery electrolyte solution purification, decreased current density in the refinery electrolytic cells, a change to top-to-bottom circulation of electrolyte in the electrolytic cells, and the use of periodic reversal of the current during electrolytic refining should be adequate to insure their elimination.

3.1.1.6 Continuous Smelting

In recent years, a number of foreign companies have initiated development of continuous smelting processes. Among other advantages, these processes eliminate reverberatory furnaces and generate off-gases with sulfur dioxide concentrations that are relatively constant and sufficiently high to permit control of sulfur dioxide emissions by the production of sulfuric acid, elemental sulfur or liquid sulfur dioxide. The most publicized continuous smelting technologies are discussed briefly below.

Noranda smelting --

The Noranda process has been developed by Noranda Mines, Ltd., of Canada. A unit that processes 800 tons of concentrate/day has been in operation since the spring of 1973 at Noranda's Quebec smelter. This operation confirms the commercial feasibility of the process, and Noranda is offering this technology for license.[86]

The entire smelting process takes place in a cylindrical vessel as shown in Figure 3-18. The vessel can be rotated on a horizontal axis to bring the gas tuyeres out of the bath for servicing. Concentrates and fluxes are continuously fed into the cylinder at one end and slag is continuously tapped from a raised hearth at the opposite end. At the center of the cylinder, metallic copper settles into a sump from which it is withdrawn periodically. Off-gases containing sulfur dioxide concentrations of 7-8% before dilution are collected in a specially designed hood.[87,88]

The process involves the following basic steps. Concentrates and flux are introduced at one end of the reactor, and are heated by a burner flame. Smelting takes place, as injected air agitates the mixture of

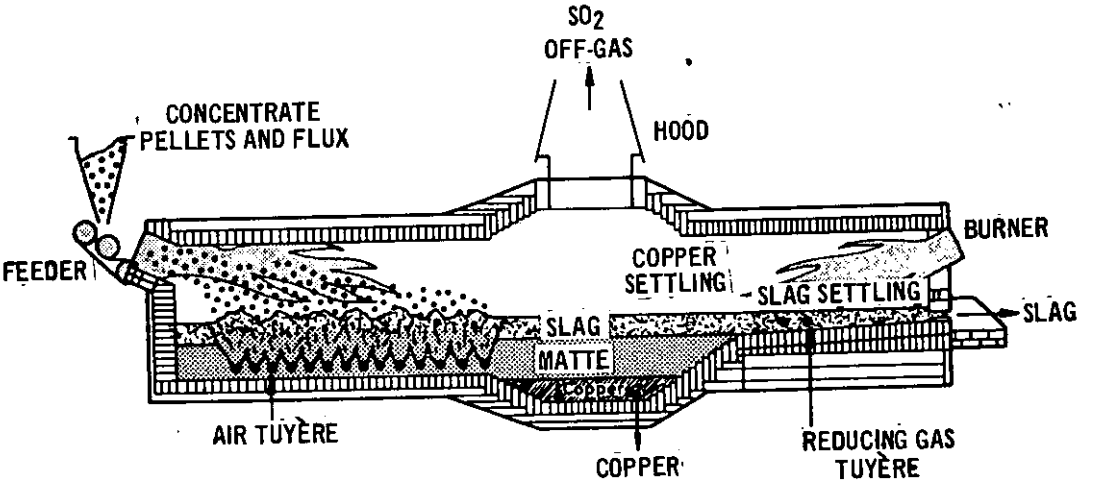

Figure 3-18 Noranda continuous smelting.[87]

slag, matte, and feed pellets. Matte and slag flows are controlled as they move slowly to the tapping ports. Oxidizing gas is introduced into the matte to oxidize ferrous sulfide. Continued injection of the gas into the resulting white metal gradually oxidizes copper sulfide to metallic copper, which is tapped periodically after it separates by settling.[89]

At no time has a "throw-away" slag been produced in the Noranda pilot-plant. With the exception of quantities used for analysis and testing, the normal practice has been to charge the slag to one of the existing copper converters at the smelter site. Typical copper concentrations in the slag are reported to be about 10-12 percent. However, Noranda has found that treatment of the slag by grinding and flotation yields a high-grade copper concentrate which can be recycled. The tailings from the grinding and flotation circuit contain only 0.5% copper and can be discarded without further treatment.[87, 88]

Some runs have been made using oxygen-enriched air in the pilot plant. This work has shown that smelting is autogenous with air enriched to 40% oxygen. With air enriched to 40% oxygen, the concentration of sulfur dioxide in the off-gases is increased to about 25%.[88]

WORCRA smelting --

The WORCRA process was developed by Conzinc Riotinto of Australia Ltd. Much of the early work was carried out at a pilot plant located at the Cockel Creek Works of Conzinc. This unit processed about 400 pounds of concentrate/hour and was operated for twelve campaigns of from two to six weeks duration each. A unit designed to process about three long tons/hour

was later built at Port Kembla where it was operated for three campaigns that gave an aggregate operation time of about 23 months.[90, 91]

The WORCRA smelting furnace as shown in Figure 3-19 consists of a long vessel with a slag well at one end and a copper well at the other, from which slag and copper are continually tapped. Concentrates and fluxes are introduced in the mildy oxidizing smelting zone although some concentrates may be added in the converter zone closer to the slag exit, where they help to control magnetite formation in the slag.[89]

A form of hot solvent-extraction is achieved by forcing the slag to move generally countercurrent to the matte. Copper in the slag tends to revert to the matte phase by interaction with ferrous sulfide in the matte. In this slag-cleaning zone, additions of concentrates or pyrites are made to cause both separation and settling of entrained matte, which is returned by gravity to the smelting zone via a sloping hearth.[89]

As the matte moves through the smelting and converting zones, it is lanced with air (or enriched air), causing conversion to white metal and then to copper. The hearth in the converting zone slopes downward to an underpass through which copper passes to a "copper well" with the blister copper product.[89]

Copper in the slag during steady-state conditions ran between 0.3 and 0.5%. The lower values were obtained when pyrites were added in the slag-cleaning zone, while higher values were achieved with concentrates as the washing agent.[89]

Off-gases from the smelting reactions are expelled through a flue over the converting zone. At the Port Kembla unit the off-gases contained

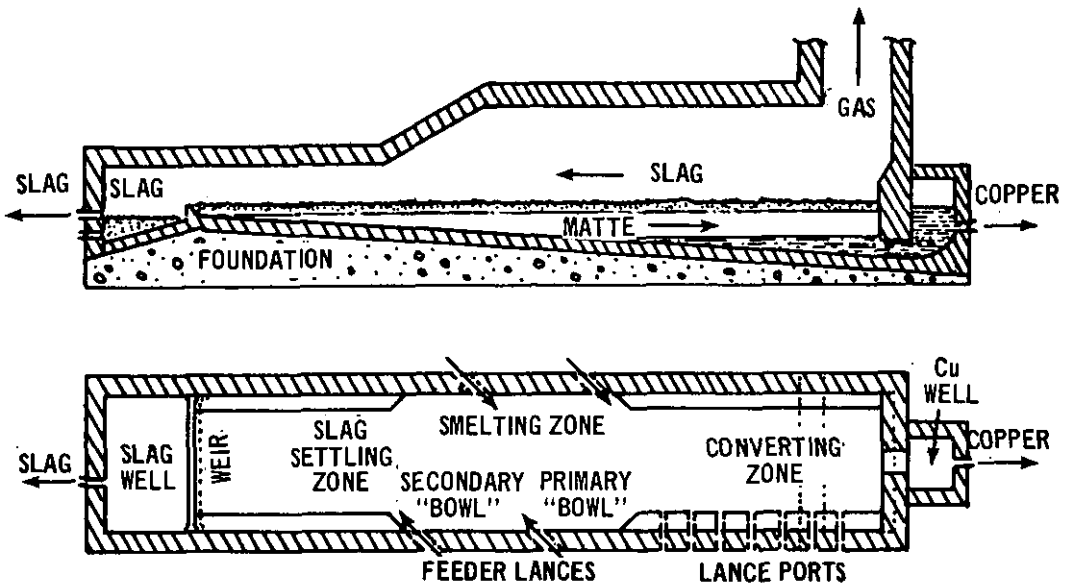

Figure 3-19 WORCRA continuous smelting.[90]

sulfur dioxide concentrations in the 5 to 8% range, but Conzinc estimates that the large future units will have typical concentrations in the 9 to 14% range. Enriched oxygen can also be used to further concentrate the off-gases to a level of about 17 percent SO_2.[92]

Mitsubishi smelting --

The Mitsubishi process has been developed by Mitsubishi Metal Corp. of Japan. Early development work was carried out in a pilot plant of 500 tons/mo. capacity during 1969 and 1970. Mitsubishi then constructed a semi-commercial plant of 1500 tons/mo. capacity in 1971 at their Onahama smelter in Japan. Currently under construction at Mitsubishi's Naoshima smelter is a commercial installation of 4500 tons/mo. capacity scheduled for startup early in 1974.[93,94]

The Mitsubishi process as shown in Figure 3-20 consists essentially of three furnaces: a smelting furnace to smelt concentrates, a converting furnace to oxidize iron in the matte and make blister copper, and a slag cleaning furnace to clean the slag. The intermediate products are transferred continuously in molten state between the respective furnaces, thus functionally connecting the furnaces with each other. A top blowing system is employed to blow oxidizing and converting air, with lances used to inject oxygen-enriched blow air and concentrates into the bath.[93]

Concentrates and fluxes are injected through the lances and are smelted in the smelting furnace. Revert slag from the converting furnace is also introduced into the smelting furnace. Matte and slag produced in the smelting furnace overflow from the smelting furnace to the slag-cleaning furnace through a launder. The slag-cleaning furnace is an

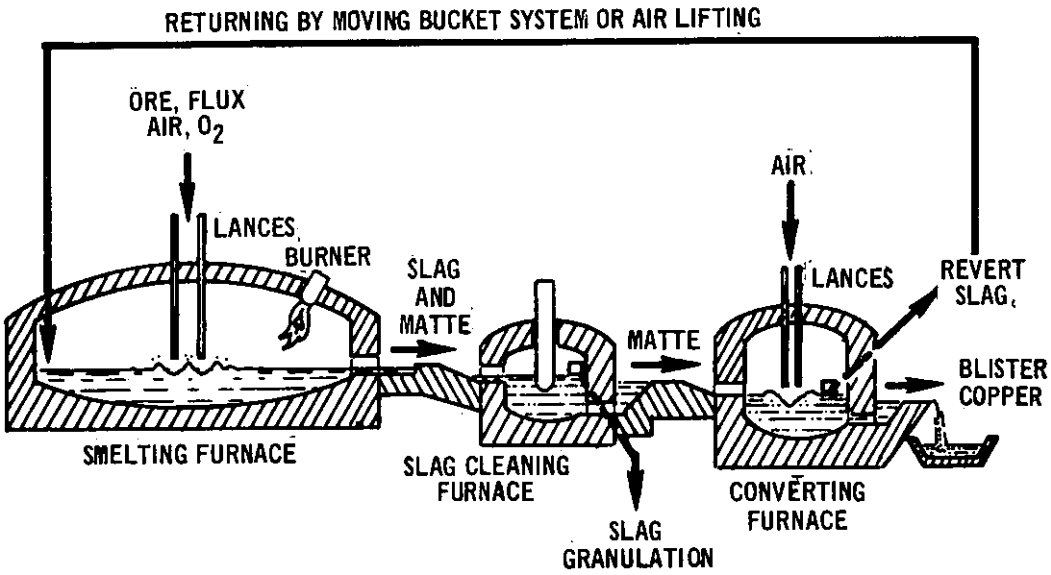

Figure 3-20 Mitsubishi continuous smelting.[89]

electric furnace. The slag is washed by pyrites mixed with coke and, after being cleaned, is continuously tapped from the furnace and granulated. The copper content in the slag is about 0.4%.[93]

Matte is siphoned from the slag-cleaning furnace continuously and transferred to the converting furnace through a launder. The converting furnace is equipped with lances that introduce blow air, converting the matte to blister copper, which is also continuously siphoned from the furnace. Slag formed in the furnace is tapped out, cooled and crushed and recycled to the smelting furnace.[93]

Off-gases produced by the smelting reactions contain sulfur dioxide concentrations of greater than 10%.[89] Consequently, the Mitsubishi process appears readily amenable to air pollution control.

Top-blown rotary converter (TBRC) smelting --

The TBRC smelting process has been developed by the International Nickel Company (INCO). INCO started work on this concept in 1959 and has recently commissioned a full-scale commercial TBRC installation for the smelting of nickel sulfide concentrates at their Copper Cliff, Ontario, smelter. The smelting of nickel sulfide ore concentrate is analogous to the smelting of copper sulfide ore concentrates, and thus INCO indicates that TBRC technology is directly applicable to copper smelting.[95] Dravo Corp. located in Pittsburgh, Pa., has been granted a worldwide license by INCO to market TBRC technology for copper smelting applications.[96]

The introduction of rotary converters first took place in 1957 at Domnarvet Steel Works of Stora Kopparberg in Sweden for the production

of high-quality steel from high-phosphorus iron ore. This system, known as the "Kaldo" process, is currently in use in eight steel plants, including one in the United States.[95]

The INCO TBRC smelting process is shown in Figure 3-21. With the use of TBRC's, the smelting of copper concentrates can be carried out autogenously. A minimum of two TBRC's are required with another maintained as a standby unit. Each TBRC may be tilted through 360° for filling, blowing or emptying. When operating, the vessel is inclined at an angle, generally between 15° and 20°, to give the optimum balance between degree of fill and agitation.[95]

Concentrate is charged to the vessel and melted with an oxy-fuel burner. Once a molten sulfide bath is formed, rotation of the vessel commences and slagging begins. Fresh concentrates and fluxes are continuously charged to the TBRC and the vessel atmosphere is controlled by injection of the desired gases, such as oxygen, natural gas and air through a water-cooled lance. The lance passes through the hood and can be adjusted as to both depth and angle in the vessel. The thermal energy produced by the oxidation reactions is utilized to supply the heat for smelting the concentrates and fluxes. Slag produced during the first stage of iron elimination is low in copper, but the final iron slag is left in the vessel for recovery of copper upon addition of new concentrate.[95]

The mouth of the TBRC vessel is equipped with an exhaust hood sealing ring which provides a bearing surface for a tight hood. The tight hood will permit sulfur dioxide concentrations of 50-75% to be attained.[95]

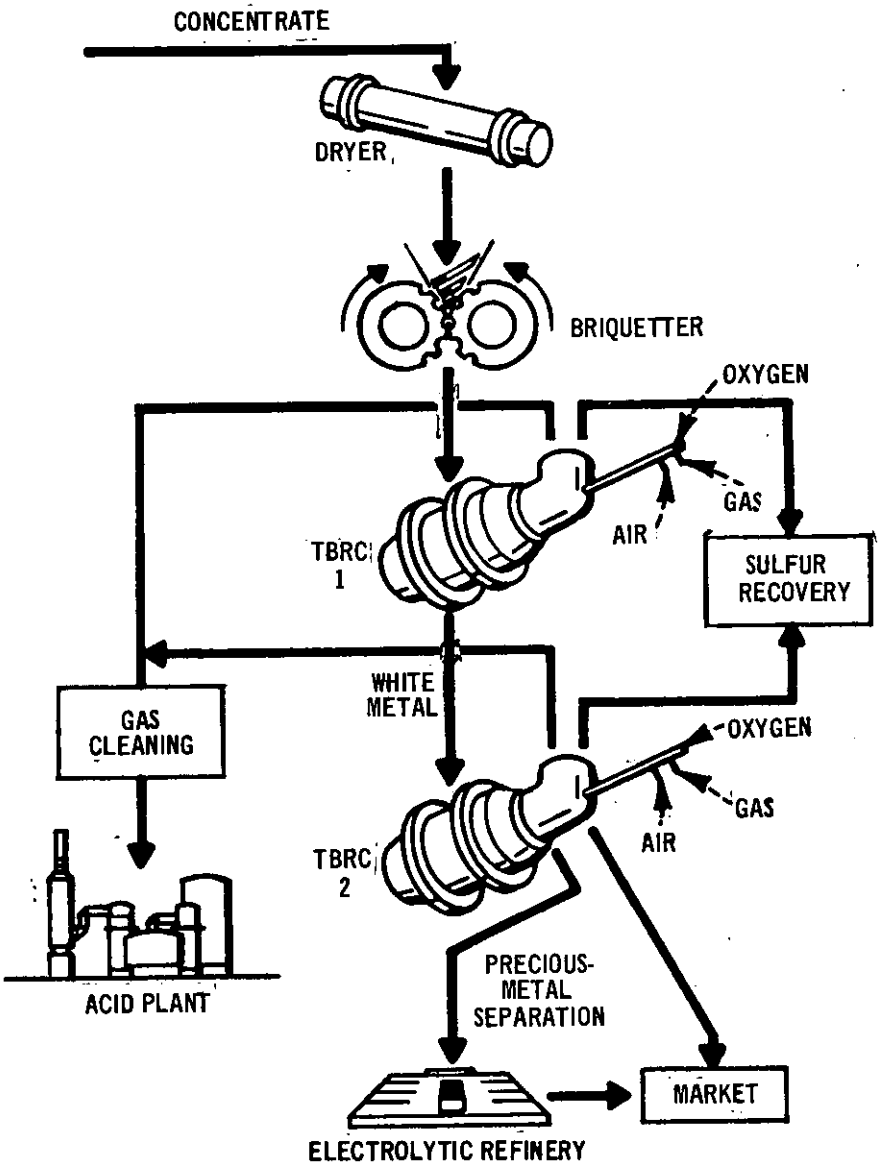

Figure 3-21 TBRC continuous smelting.[89]

References for Section 3.1.1

1. G. S. Thompson (EPA), Summary table of SO_2 emissions breakdown developed from review of EPA-Industry correspondence, January 1973.

2. J. R. Boldt, Jr., The Winning of Nickel, The International Nickel Co. of Canada, Ltd., Longman's Canada, Ltd., Toronto, Canada, 1967.

3. R. B. Thompson and W. W. Jukkola, Pyrites and Sulfide Ore Burners or Roasters, Manufacture of Sulfuric Acid, 61-84; Reinhold Publishing Co., New York, 1959.

4. Systems Study for Control of Emissions - Primary Non-Ferrous Smelting Industry; Arthur G. McKee & Co., Western Knapp Engineering Division, Public Health Service, U.S. Dept. of Health, Education and Welfare, Contract No. PH 86-65-85, June 1969.

5. J. C. Yannopoulos, Optimization of the Converting Operation in a Smelter Producing Copper and Sulfuric Acid, Paper presented at MMIJ-AIME Joint Meeting, Tokyo, Japan, May 24-27, 1972.

6. P. Kettner, C. A. Maelzer and W. H. Schwartz, The Brixlegg Electro-Smelting Process Applied to Copper Concentrates, Environmental Control, 37-63, Metallurgical Society of A.I.M.E., Proceedings of Symposium - 101st A.I.M.E. Annual Meeting, San Francisco, February 20-24, 1972.

7. R. B. Thompson and G. Roesner; Fluid Bed Roasting - Principles and Practice; Extractive Metallurgy of Copper, Nickel and Cobalt, Interscience, New York, 1961; 3-32.

8. K. B. Murden, Outokumpu Flash Smelting and Sulfur Recovery, Paper presented to 101st Annual Meeting of A.I.M.E. in San Francisco, February 1972.

9. Personal communication - F. L. Porter (EPA) with L. V. Lee (Dorr-Oliver), Dorr-Oliver, Inc., Stamford, Connecticut, October 2, 1972.

10. K. Kaasila, Flash Smelting Process, Paper presented at a Seminar on Copper Production, United Nations Industrial Development Organization; Tashkent, Soviet Union, October 1-15, 1970.

11. T. Fujii, M. Ando, Y. Jujiwara, Copper Smelting by Flash Furnace at Saganoseki Smelter and Refinery, Paper presented at Joint Meeting MMIJ-AIME, Tokyo, Japan, May 24-27, 1972.

12. Personal communication - J. M. Henderson (ASARCO) letter to D. F. Walters (EPA), Nov. 24, 1972.

13. L. R. Verney, J. R. Harper and P. N. Vernon; Development and Operation of the Chambishi Process for the Roasting, Leaching and Electrowinning of Copper; Paper presented at Symposium on Electrometallurgy - Extractive Metallurgy Division, AIME; Cleveland, Ohio; December 1968.

14. Anon.; World Mining - U.S. Edition; Vol. 8, No. 13; December 1972; p. 54.

15. J.V. Beall; Copper in the U.S. - A Position Survey; Mining Engineering; April 1973; pp. 35-47.

16. F.M. Stephens; The Fluidized-Bed Sulfate Roasting of Nonferrous Metals; Chemical Engineering Progress; Vol. 49, No. 9; September 1953; pp. 455-458.

17. Agers, D.W., and E.R. DeMent, The Evaluation of New LIX Reagents for the Extraction of Copper and Suggestions for the Design of Commercial Mixer-Settler Plants, Paper No. A72-87, The Metallurgical Society of AIME, New York, N.Y. (no date).

18. Agers, D.W., et al., Copper Recovery from Acid Solutions Using Liquid Ion Exchange, General Mills Chemicals, Inc., Minneapolis, Minn. (no date).

19. LIX 70 - A Major Advance in Liquid Ion Exchange Technology, Paper presented at AIME Centennial Annual Meeting, Feb. 26 - March 4, 1971, by Mills Industries and Research Groups, General Mills Chemicals, Inc., Minneapolis, Minn.

20. Personal communication - F.L. Porter (EPA) with W.H. Love (Hecla Mining Co.); Hecla Mining Co., Wallace, Idaho; May 2, 1973.

21. Personal communication - F.L. Porter (EPA) with E.R. Marble, Jr. (Consulting Engineer); Metuchen, N.J.; September 26, 1972.

22. Personal communication - F.L. Porter (EPA) with A. Suganuma (Mitsubishi); Mitsubishi Metal Co., Naoshima, Japan; September 9, 1972.

23. K. Itakura, T. Nagano, and J. Sasakur, Converter Slag Flotation - Its Effects on Copper Reverberatory Smelting Process, Journal of Metals, 30-34, July 1969.

24. H. W. Mossman, Magnetite in the Hurley Copper Smelter, Journal of Metals, September 1956, pp. 1182-1191.

25. Personal communication - F.L. Porter (EPA) with H. Ikeda (Onahama), Onahama Smelting and Refining Co., Onahama, Japan, September 7, 1972.

26. K.T. Senrau, Control of Sulfur Oxide Emissions from Primary Copper, Lead and Zinc Smelters - A Critical Review, Journal of the Air Pollution Control Association, Vol. 21, No. 4, 185-194, April 1971.

27. Yu. P. Kupryakov, et. al.; Operation of Reverberatory Furnaces on Air-Oxygen Blasts; The Soviet Journal of Nonferrous Metals; English Translation - Vol. 10, No. 2, February 1969, pp. 13-16; Russian Edition - Vol. 42, No. 2, p. 14.

28. P.R. Smith, D.W. Bailey, R.E. Doane; Minerals Processing: Where We Are. . . Where We're Going; E/MJ Mining Guidebook; Engineering and Mining Journal; June 1972; pp. 161-183.

29. R.R. Saddington, W. Curlook, and P. Queneau, Use of Tonnage Oxygen by the International Nickel Co., Pyrometallurgical Processes in Nonferrous Metallurgy, Gordon and Breach, New York, 1967, pp. 261-289.

30. M. Niimura, T. Konada, R.Kojima, Control of Emissions at Onahama Copper Smelter, Paper presented at Joint Meeting MMIJ-AIME in Tokyo, Japan, May 24-27, 1972.

31. M. Niimura, T. Konada, R. Kojima, Sulfur Recovery from Green-Charged Reverberatory Off-Gas at Onahama Copper Smelter; Paper presented at the Annual Meeting of AIME in Chicago, February 1973.

32. Advertisement for MgO scrubbing.

33. V.I. Emirnov, Possibilities for Technical Progress in Reverberatory Smelting of Copper Concentrates, The Soviet Journal of Nonferrous Metals, English Translation - Vol. 10, No. 8, August 1969, pp. 5-7; Russian Edition - Vol. 42, No. 8, p. 6.

34. G.C. Beals, J. Kocherhaus, and K.M. Ogilvie, U.S. Patent No. 3222162, Kennecott Copper Corp., Patented December 7, 1965.

35. D.G. Treilhard; Copper Smelting Today: The State of the Art; Chemical Engineering; April 16, 1973; pp. P-Z.

36. O. Barth; Electric Smelting of Sulfide Ores; Extractive Metallurgy of Copper, Nickel and Cobalt; Interscience Publishers; New York; 1960; pp. 241-262.

37. Personal correspondence - N. Georgieff (EPA) with H. Chr. Andersen (ELKEM), ELKEM A.S., Oslo, Norway, May 8, 1972.

38. J. A. Persson and D.G. Treilhard; Electrothermic Smelting of Copper and Nickel Sulfides and Other Metal Bearing Constituents; Journal of Metals; January 1973; pp. 34-39.

39. Anon.; Kennecott Reviews Smelter Acid Technology - Still the Largest U.S. Producer; Sulfur; No. 96; Sept./Oct. 1971.

40. Personal communication - F.L. Porter (EPA) with F. Laird (Anaconda), The Anaconda Co., Tucson, Arizona, January 14, 1974.

41. D.W. Rodolff and E.R. Marble, Jr., Air Pollution Abatement Plans at the Inspiration Smelter, Paper presented to 101st Annual Meeting AIME, San Francisco, California, February 1972.

42. L. White; Copper Smelting Today: The State of the Art - The Newer Technology: Where It Is Used and Why; Chemical Engineering; April 16, 1973; pp. AA-CC.

43. Personal communication - F.L. Porter (EPA) with G. Bridgestock (Lummus), The Lummus Co. (Canada) Ltd., Toronto, Canada, July 31, 1972.

44. T. I. Neimela, S.V. Kaikki, The Latest Development in Nickel Flash Smelting at the Harjavalta Smelter, Outokumpu Oy, Finland, Paper presented at Joint Meeting MMIJ-AIME, Tokyo, Japan, May 24-27, 1972.

45. The Staff, The Oxygen Flash Smelting Process of the International Nickel Company, Canadian Mining and Metallurgical Bulletin, Vol. 48, No. 517, p. 292, May 1955.

46. C.L. Milliken and F.F. Hofinger, An Analysis of Copper Converter Size and Capacity, Journal of Metals, 39-45, April 1968.

47. C.L. Milliken, What is the Future of the Copper Smelter, Journal of Metals, 51-54, August 1970.

48. Personal communication - F.L. Porter (EPA) with Dr. K.B. Murden (Outokumpu), Outokumpu Oy, Helsinki, Finland, August 30, 1972.

49. H.J. Schroeder; Copper - Bureau of Mines Minerals Yearbook; U.S. Dept. of Interior, U.S. Government Printing Office; Washington, D.C.; 1971.

50. Personal communication - F.L. Porter (EPA) with S. Tanaka (Mitsui), Mitsui Mining and Smelting Co. Ltd., Tamano, Japan, September 10, 1972.

51. M. Mealey, Japan's Tamano Copper Smelter: The Most Modern in the World, Engineering and Mining Journal, 130-131, June 1972.

52. Personal communication - G. Thompson (EPA) with L.S. Renzoni (INCO), International Nickel Co. Ltd., Toronto, Canada, September 14, 1972.

53. S. Merla, C.E. Young and J.W. Matousek; Recent Developments in the INCO Oxygen Flash Smelting Process; Environmental Control - A Publication of the Metallurgical Society of AIME; Proceedings of Symposium 101st AIME Annual Meeting, San Francisco; February 20-24, 1972; pp. 19-35.

54. T. Lukkarinen, How Outokumpu Recovers Copper from Smelter Slag at Harjavalta, World Mining, pp. 28-33 (United States Edition), July 1971.

55. Personal communication - F.L. Porter (EPA) with S. Yasuda (Furukawa), Furukawa Co. Ltd., Tokyo, Japan, September 13, 1972.

56. T. Okazoe, T. Kato, K. Murao; The Development of Flash Smelting Process at Ashio Copper Smelter; Pyrometallurgical Processes in Nonferrous Metallurgy; Edited by Anderson and Queneau; Gordon and Breach; New York; 1967; pp. 175-195.

57. F.L. Porter (EPA); EPA Survey of Typical Domestic Copper Sulfide Ore Concentrates; May 21-25, 1973.

58. Anon.; Copper Industry Uses Much Scrap Iron; Environmental Science and Technology; February 1973; pp. 100-102.

59. J. Dasher and K. Power; Copper Solvent - Extraction Processes: From Pilot Plant to Full-Scale Plant; Engineering and Mining Journal; April 1971; pp. 111-115.

60. K. Kaasila and E. Loytymaki, Heat Recovery in Metallurgical Processes and Applications Within the Outokumpu Company, Paper presented at Advances in Extractive Metallurgy and Refining Meeting, Institution of Mining and Metallurgy, London, England, October 1971.

61. Personal correspondence - T.A. Kittleman (EPA) with D.L. Simpson (Lummus), The Lummus Co. (Canada) Ltd., Toronto, Canada, August 3, 1972.

62. Personal correspondence - F.L. Porter (EPA) with T. Kato (Furukawa), Furukawa Co. Ltd., Tokyo, Japan, September 30, 1972.

63. S. Karkki, Outokumpu Flash Smelting Method for Copper Concentrates and Its Application to Pyrites for the Production of Elemental Sulfur, Paper released to EPA by Outokumpu Oy, Helsinki, Finland, August 30, 1972.

64. Anon.; Outokumpu Process for the Production of Elemental Sulfur from Pyrites, Sulfur, No. 50, 1964.

65. Personal correspondence - N.T. Georgieff (EPA) with N. Solin (Outokumpu), Outokumpu Oy, Helsinki, Finland, May 12, 1972.

66. Anon.; Engineering and Mining Journal, Vol. 173, No. 7, 132, July 1972.

67. T.E. Tsvetkov; Metallurgy of Heavy Nonferrous Metals Part 1 - Copper; Tekhnika State Publishing House; Sophia, Bulgaria; 1962; National Translations Center; D. John Crerar Library, 35 West 33rd St., Chicago, Illinois; Crerar #73-50300.

68. C.L. Milliken and F.F. Hofinger; An Analysis of Copper Converter Size and Capacity; Journal of Metals; April 1968; pp. 39-45.

69. G.C. Beals and J.J. Cadle; Copper and By-Product Sulfuric Acid Production by Palabora Mining Co.; Journal of Metals; July 1968, pp. 85-92.

70. T. Nagano and M. Niimura; Features of the Onahama Copper Smelter Boilers Behind Converters; Journal of Metals; July, 1968; pp. 76-81.

71. Personal communication - F. L. Porter (EPA) with S. Enomoto (Nippon Mining); Nippon Mining Co. Ltd., Saqanoseki, Japan; September 12, 1972.

72. J. Leroy and P.J. Lenoir; Hoboken Type of Converter and Its Operation; Presented at Advances in Extractive Metallurgy Symposium; Institution of Mining and Metallurgy; April 1967, London, England.

73. C. Arentzen; Oxygen-Enriched Air for Converting Copper Matte; Journal of Metals; September 1962; pp. 641-643.

74. P.J. Lenoir, J. Thiriar, C. Coekelberg; Use of Oxygen-Enriched Air at the Metallurgie Hoboken-Overpelt Smelter; Presented at Advances in Extractive Metallurgy Symposium; Institution of Mining and Metallurgy; October 1971; London, England.

75. M.E. Messner and D.A. Kinneberg; Direct Converter Smelting at Utah Using Oxygen; Journal of Metals; July 1969; pp. 23-29.

76. Personal communication - R.T. Jacobs (EPA) with Dr. R.J. Heaney (Kennecott); Kennecott Copper Corp., Salt Lake City, Utah; March 8, 1972.

77. J.S. Smart; The Effect of Impurities in Copper; Copper: The Science and Technology of the Metal-Its Alloys and Compounds; Allison Butts, editor; American Chemical Society Monograph Series; Reinhold Publishing; N.Y.; 1954; pp. 410-416.

78. J.V. Stafford, editor; Metal Statistics 1972; 65th Annual Edition; American Metal Market Co.; Somerset; N.J.; p. 117.

79. H.J. Miller; The Fire Refining of Copper; Copper: The Science and Technology of the Metal-Its Alloys and Compounds; Allison Butts, editor; American Chemical Society Monograph Series; Reinhold Publishing; N.Y.; 1954; pp. 290-299.

80. J. Newton; Extractive Metallurgy; John Wiley & Sons, Inc.; February 1967; pp. 449-476.

81. C.W. Eichrodt and J.H. Schloen; Electrolytic Copper Refining; Copper: The Science and Technology of the Metal-Its Alloys and Compounds; Allison Butts, editor; American Chemical Society Monograph Series; Reinhold Publishing; N.Y., 1954; pp. 165-222.

82. P.C. Lockyer, R.R. Neller; Electrolytic Refining of Copper; Metal Industry; February 5, 1960; pp. 110-114.

83. P.C. Lockyer, R.R. Neller; Electrolytic Refining of Copper; Metal Industry; February 12, 1960; pp. 129-130, 134.

84. D. Petrov; Electrolytic Copper Refining at High Current Densities in the Copper Refinery "G. Damianov", Zlatitsa-Pirdop, Bulgaria; Paper presented at Annual AIME meeting; New York, N.Y.; March 1971.

85. R. Lindstrom, S. Wallden; Reverse Current Copper Electrolysis; Paper presented at International Symposium on Hydrometallurgy - Extractive Metallurgy Division; AIME; Chicago, Illinois; February 1973.

86. Personal communication - F.L. Porter (EPA) with J.N. Anderson (Noranda), Noranda Mines, Ltd., Toronto, Canada, January 17, 1974.

87. N.J. Themelis, G.C. McKerrow; Production of Copper by the Noranda Process; Presented at the Symposium on Advances in Extractive Metallurgy and Refining; Institution of Mining and Metallurgy; London; October 1971.

88. N.J. Themelis, G.C. McKerrow, P. Tarassoff and G.D. Hallet; The Noranda Process; Journal of Metals; April 1972; pp. 25-32.

89. F.C. Price; Copper Technology On the Move; Facing the Change in Copper Technology; Chemical Engineering; April 16, 1973; pp. RR-YY.

90. H.K. Worner, J.O. Reynolds, B.S. Andrews, A.W.G. Collier; Developments in WORCRA Smelting-Converting; Presented at Symposium on Advances in Extractive Metallurgy and Refining; Institution of Mining and Metallurgy; London; October 1971.

91. J.O. Reynolds; WORCRA Copper and Nickel Smelting; Presented at Joint AIME-MMIJ Meeting; Tokyo, Japan; May 1972.

92. J.O. Reynolds, K.J. Phillips, D.E. Fitzgerald, H.K. Worner; Sulfur Recovery from the WORCRA Copper Smelting Process; Presented at the AIME Annual Meeting; San Francisco; February 1972.

93. T. Suzuki and T. Nagano; Development of New Continuous Copper Smelting Process; Presented at AIME-MMIJ Joint Meeting; Tokyo, Japan; May 1972.

94. Anon.; World Mining; February 1973; p. 65.

95. R.A. Daniele and L.H. Jaquay; TBRC - A New Smelting Technique; Presented at Annual AIME Meeting; San Francisco; February 1972.

96. Anon.; Metallograms; Journal of Metals; January 1973; p. 10.

97. Dayton, Stan, "Inspiration's Design for Clean Air," Engineering and Mining Journal, June 1974, pp. 85-96.

98. U.S. Environmental Protection Agency Special Foreign Currency Projects, Nonferrous Smelting, A Status Report, August 1974.

3.1.2 Zinc Smelting

Zinc is usually found in nature as a sulfide ore called sphalerite. The ores usually contain impurities of lead, cadmium, and minor amounts of other trace elements, and are processed at the mine to form concentrates containing up to 62 percent zinc and 32 percent sulfur.

The smelting of zinc sulfide concentrates into product zinc oxide or metallic zinc is carried out by either a pyrometallurgical or a combination pyrometallurgical-electrolytic extraction process as illustrated in Figures 3-22 and 3-23. The three primary steps of the pyrometallurgical extraction process are:

1. Roasting of zinc sulfide concentrates to remove most of the sulfur and form an impure zinc oxide called calcine.
2. Sintering of the calcine to eliminate the remaining sulfur, volatilize lead and cadmium, and form a dense, permeable furnace feed.
3. Reducing pyrometallurgically the zinc oxide (calcine) to metallic zinc.

The smelting of zinc sulfide concentrates using electrolytic extraction requires two principal operations:

1. Roasting of the zinc sulfide concentrate to remove most of the sulfur and form calcine.
2. Electrolytic extraction, after chemical leaching of calcine, to produce 99.99 + percent pure high-grade zinc.

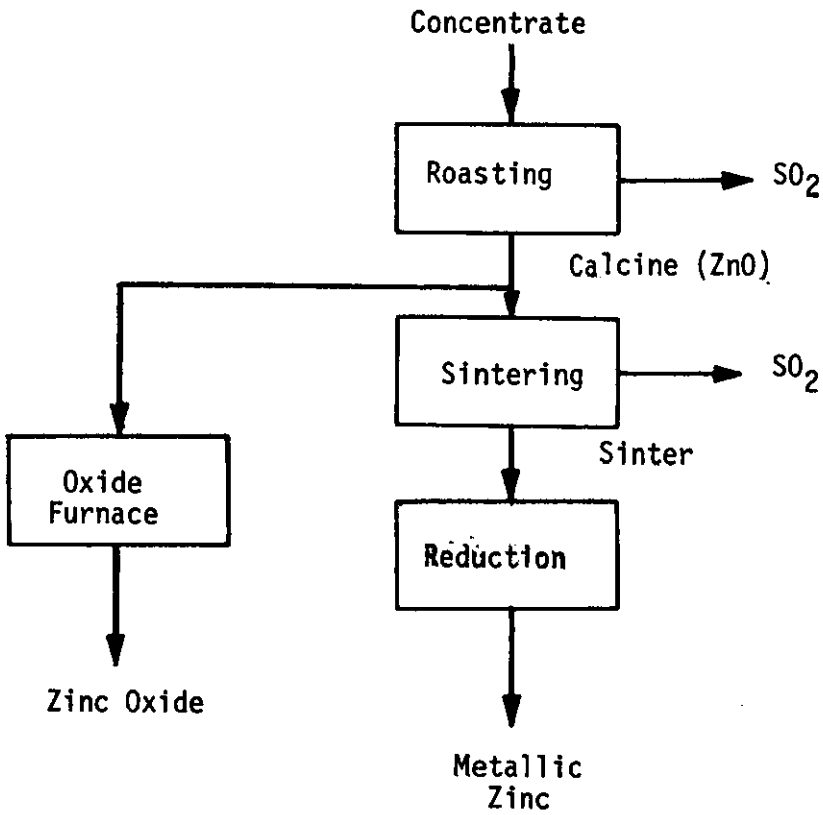

Figure 3-22 Primary pyrometallurgical zinc smelting process.

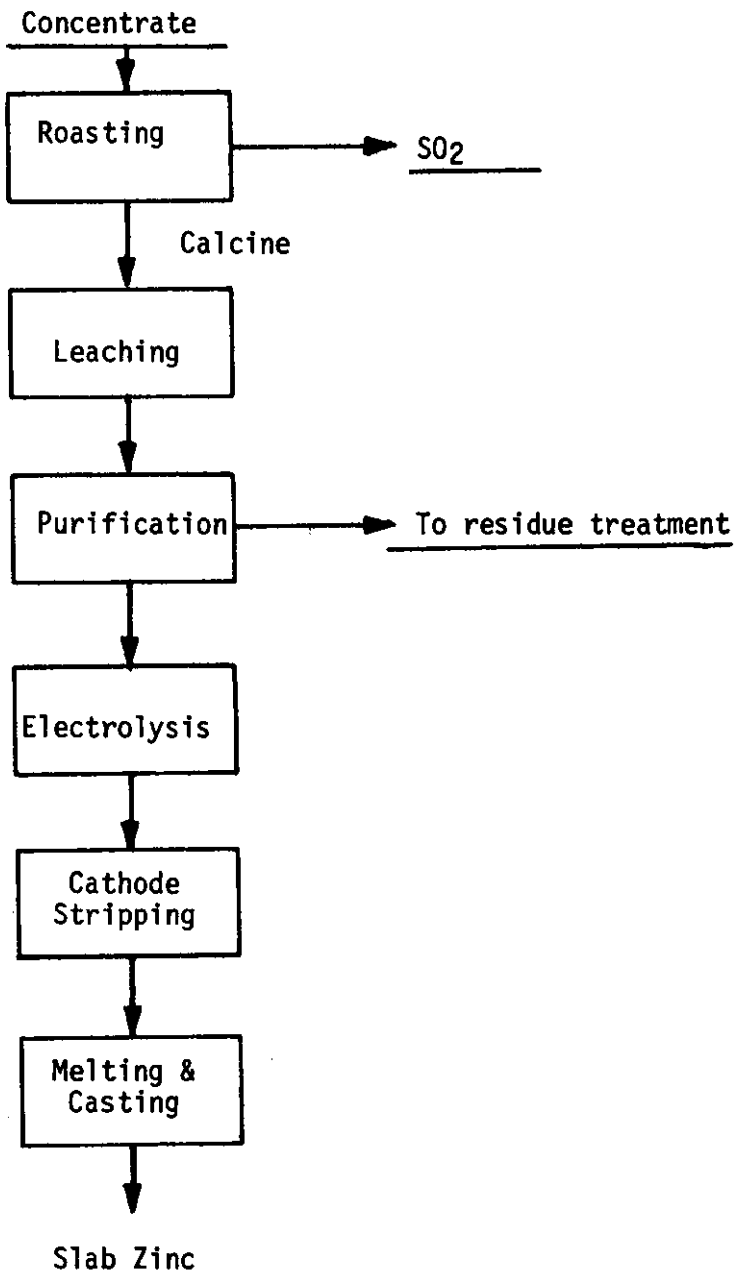

Figure 3-23 Primary electrolytic zinc smelting process.

As of mid-1973, there were eight primary zinc smelters in the United States. Seven of the eight smelters roast zinc concentrate, whereas the eighth plant performs a combined roasting-sintering operation on a single machine. The different roasting systems include the antiquated Ropp roaster, the multiple-hearth roaster, the flash or suspension roaster, and the fluid-bed roaster. Each of these systems is being used by one or more of the domestic smelters.

Effluent streams from the Ropp roaster average less than 1 percent SO_2,[1] whereas the multiple-hearth roaster, the flash roaster and the fluid-bed roaster yield a gas stream of from 5 to 14 percent SO_2.[1] All currently used roasting systems with the exception of the Ropp roaster produce gas streams amenable to conventional acid plant control. The roasting process in a zinc smelter typically is responsible for greater than 90 percent of the potential sulfur dioxide emissions from the smelter.

Zinc sintering typically accounts for less than 10 percent of the potential smelter SO_2 emissions, with the exception of the case where the roast-sinter technique is used. With the roast-sintering, all the potential emissions are contained in the sinter machine effluent stream.

Zinc sinter machine effluents usually contain less than 0.2 percent SO_2, varying to as low as 0.05 percent. However, this ranges as high as 2.5% when the roast-sinter technique is used without gas recirculation. The major potential emission problem of the zinc sintering machine is particulates, which are usually controlled with high-efficiency precipitators or baghouses.

There are three basic reduction systems used by domestic pyrometallurgical zinc smelters: horizontal retort furnaces, vertical retort furnaces, and electro-thermal furnaces.[1] Each type of reduction system requires a particular type of sinter, ranging from soft to hard; therefore, the reduction system determines to some extent the type of prior roasting and sintering operations and thereby the emission characteristics of these systems. The reduction systems generate only minor amounts of SO_2.

There are a number of process variations which can be used to facilitate SO_2 emission control. These include the use of:

1. The Robson process.
2. Sulfur elimination roasting, followed by coke sintering.
3. Electrolytic extraction.
4. The Imperial smelting process.

Each of these process variations is discussed in the following sections.

3.1.2.1 Roasting

Summary --

Regardless of the extractive technique used, pyrometallurgical or electrolytic, domestic and foreign zinc smelters utilize one or a combination of several types of roasters to remove sulfur from the concentrate. These include the antiquated Ropp and multiple-hearth roasters and the modern flash and fluid-bed roasters. During zinc sulfide roasting, 93 to 97 percent of the input sulfur can be converted to SO_2. The exact percentage elimination is a function of the concentrate sulfur content; for a given percent residual sulfur content in the product calcine, the higher the concentrate sulfur content the greater the sulfur elimination percentage of the roasting process.

Most domestic pyrometallurgical operations do not roast to remove the maximum amount of sulfur from the concentrate. Therefore, the sulfur remaining in the calcine is emitted to the atmosphere as SO_2 during the sintering. By decreasing the sulfur in the calcine to perhaps 1 to 1.5%, approximately a 50% decrease in SO_2 emissions from the sintering process can be realized. Modern roasting systems are capable of producing a calcine of the above values.

Potential particulate emissions can run as high as 70 percent of the feed concentrate (fluid-bed roaster); however, since SO_2 control systems normally require clean gas streams, particulates are captured prior to SO_2 control and thus present no air pollution problems. The effluent from the Ropp and multiple-hearth roasters contain up to 1 percent and 7 percent SO_2, respectively, whereas both the flash and fluid-bed roasters generate effluent streams containing from 10 to 14 percent SO_2.

General discussion--[25-31]

Roaster operating parameters vary from plant to plant depending upon the type of product calcine required and the extractive technique used. Regardless of the desired properties of the calcine, a basic requirement for either pyrometallurgical or electrolytic extraction is the breakdown of the sulfide bond to produce zinc oxide and/or zinc sulfate. In pyrometallurgical extraction only the oxide state is preferred, whereas in electrolytic extraction the oxide state plus small percentages of the sulfate state is acceptable.

For pyrometallurgical smelting, the degree of sulfur removal during roasting is of major importance with regard to the control of sulfur dioxide emissions from the smelting process because the subsequent sintering and reducing operations can generate off-gases with low concentrations of SO_2. Some of the zinc sulfide is permitted to remain in the calcine following roasting, and serves two functions. First, because the calcine requires sintering before reduction, the residual sulfur can supply a portion of the fuel requirement for the sintering operation and will be eliminated in the sintering process. Second, because zinc sulfate can result in a zinc loss in the extraction process, the zinc sulfide level is maintained high enough to prohibit significant formation of sulfates in the roaster. On the other hand, if roasting is followed by electrolytic extraction, the zinc sulfide level must be minimized since it is not soluble in the leaching solution and will result in a zinc loss in the process.[3]

The Ropp roaster, the oldest system still in use by the domestic industry, is the only roasting system which does not generate a strong

SO_2 off-gas stream. Basically, it is a long, horizontal, mechanically rabbled furnace open at both ends and divided into two parallel hearths. The off-gas temperatures range up to 650°C, and the sulfur dioxide concentrations range from 0.7 to 1.0% SO_2.[1] Operation of the Ropp roaster requires from 50 to 80 percent excess air. A typical roaster has a capacity of approximately 45 tons/day. Because the Ropp system represents an antiquated and inefficient technology, it is highly unlikely that any new systems of this type will be built in the future.

The multiple-hearth roaster is the second oldest type roaster currently in use in the domestic industry. It is basically a cylindrical column of 20 to 25 feet in diameter with 7 to 16 hearths (See Figure 3-24). The reaction within the roaster is essentially autogenous. In order to attain a zinc sulfide content in the calcine as low as 0.5 to 1.0 percent, however, some additional fuel is added to the lower hearths.[1] Since the gases from the multiple-hearth roaster do not have sufficient heat value to allow the economical use of waste heat boilers, air dilution is usually used to decrease gas temperature. Therefore, because of dilution, gas concentration from the roaster will range only up to approximately 7 percent SO_2.[2] The normal production rate for multiple-hearth roasters averages 100 tons per day. The multiple-hearth roaster has the capability of producing a relatively high-purity calcine, which is of major importance when considering electrolytic reduction. Its use permits the selective volatilization of the sulfides, such as those of lead and cadmium which can be captured with the flue dust.[1] However, this system has a lower production rate than that attainable with more modern roasters, and it

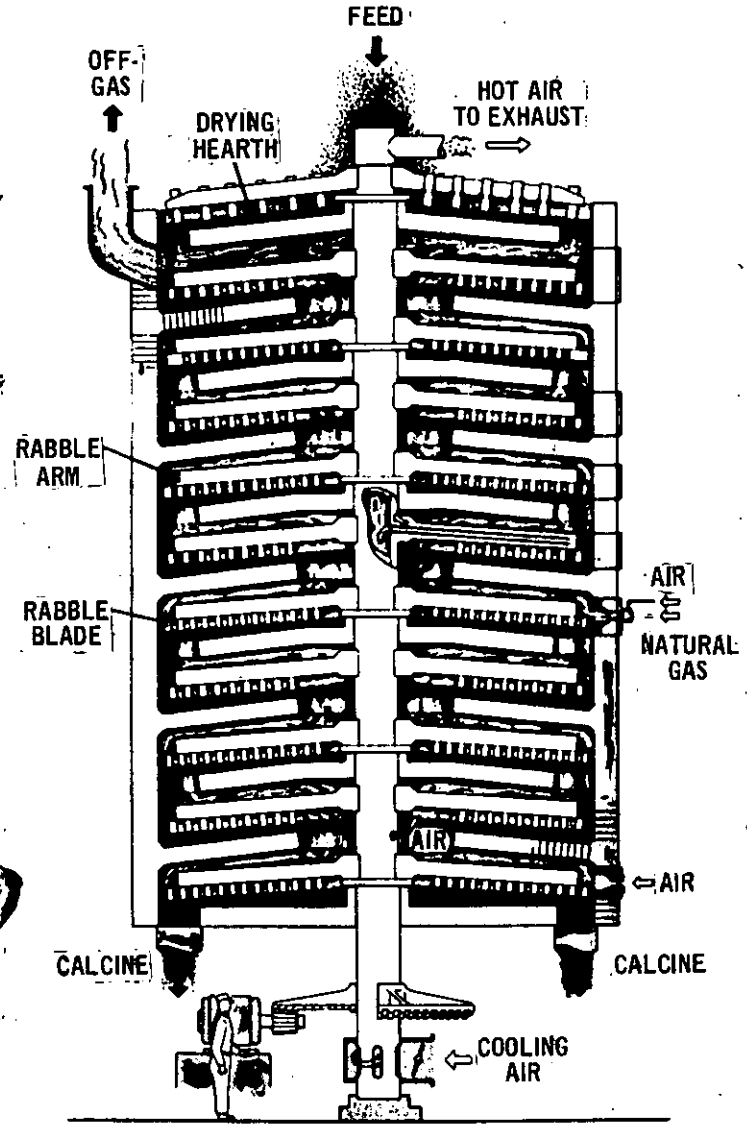

Figure 3-24 Multiple-hearth roasting furnace.

is doubtful that any new roasters of this type will be built.

The flash roaster is a refractory-lined cylindrical steel chamber which encloses a drying hearth and a combustion chamber. A number of the earlier models were converted multiple-hearth roasters with all hearths removed except the top and bottom ones. The top hearth was used for concentrate drying. The later models, while similar in design, have the drying hearth located at the bottom rather than at the top (Figure 3-25).

The operation of the flash roaster resembles the burning of powdered coal in a furnace in that the concentrate is injected into a combustion chamber with a stream of air. The sulfur content of the zinc concentrate acts as fuel in the ensuing exothermic reaction which produces sulfur dioxide. During the reaction, the temperature in the combustion chamber is controlled to within the optimum range of 960 to 1020°C.[5] This permits the production of a calcine containing from 0.1 to 5.0% sulfide sulfur.[5] At the same time, the sulfur in sulfate form can be controlled to from approximately zero to a maximum 2.5%.[5] The higher values of sulfides content in the calcine usually correspond to relatively low sulfate content. Conversely, calcine with low levels of sulfur in sulfide form normally has a high sulfate content.

The calcine with the highest sulfides content is that on the collecting hearth at the bottom of the furnace, whereas the calcine captured in the gas stream is relatively high in sulfates content. The coarser calcine from the collecting hearths and the flue dust is further desulfurized by being rabbled over a series of additional hearths at the bottom of the furnace. This further roasting in the bottom hearths

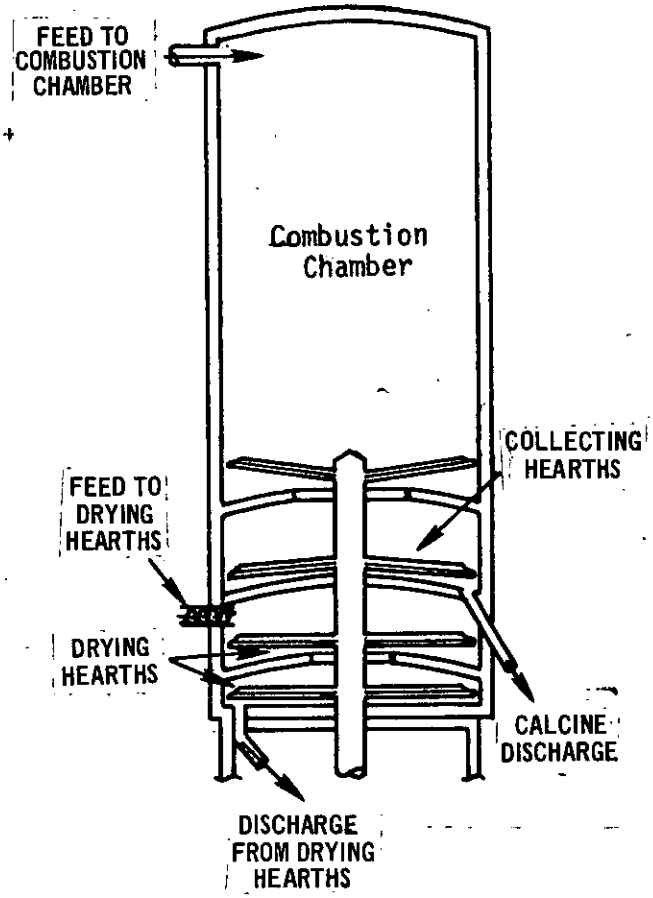

Figure 3-25 Flash roasting furnace.

allows the production of a homogenous product with minimum total sulfur content. Typical roaster operation data from the ASARCO smelter at Corpus Christi, Texas, and the Cominco smelter at Trail, B.C., indicate that this system can yield a calcine with sulfur contents as shown in Table 3.2.

As discussed above, the flash roaster can be operated to consistently produce a calcine containing 0.1 to 0.5% residual sulfur in sulfide form and 0 to 2.5% residual sulfur in sulfate form. The roaster is normally operated to produce a calcine with 2.5% or greater total sulfur when the calcine is to be used as sinter feed. The typical flash roaster processes between 100 and 350 tons per day of calcine.

The fluid-bed roaster is the newest roasting system for zinc sulfide concentrates. There are several types in use which differ primarily in the manner in which the roasters are charged. Some are charged with a wet slurry, whereas others feed a dry charge to the combustion chamber. (See Figure 3-26.)

The off-gases from the roaster will have a SO_2 concentration of from 10 to 13 percent.[5] In addition, from 50 to 85% of the roaster charge will be carried out in the off-gas stream.[1]

The reaction within the roaster is an autogenous reaction, and no external heat source is required after initial startup. The operating temperature averages up to 1000°C, with either water injection or slurry feed rate used to control bed temperature.[1] Normally, only about 20 to 30 percent excess air is required to ensure efficient desulfurization of the zinc concentrate feed.[5] The sulfur content in sulfide form of the concentrate can be lowered to 0.1%, but values somewhat higher, particularly

Table 3-2 SULFUR CONTENT OF MATERIALS AT TYPICAL ELECTROLYTIC SMELTERS (USING RECYCLING OF COTTRELL DUST)[6, 7]

Plant A

	Concentrate, % weight	Calcine, % weight	Cottrell dust % weight
Total Sulfur	31.5	0.83	6.2
Sulfate	—	0.73	5.7
Sulfide	—	0.1	0.5

Plant B

	Concentrate %	Calcine %	
Total Sulfur	31.7	2.1	—
Sulfate	—	1.3	—
Sulfide	—	0.8	—

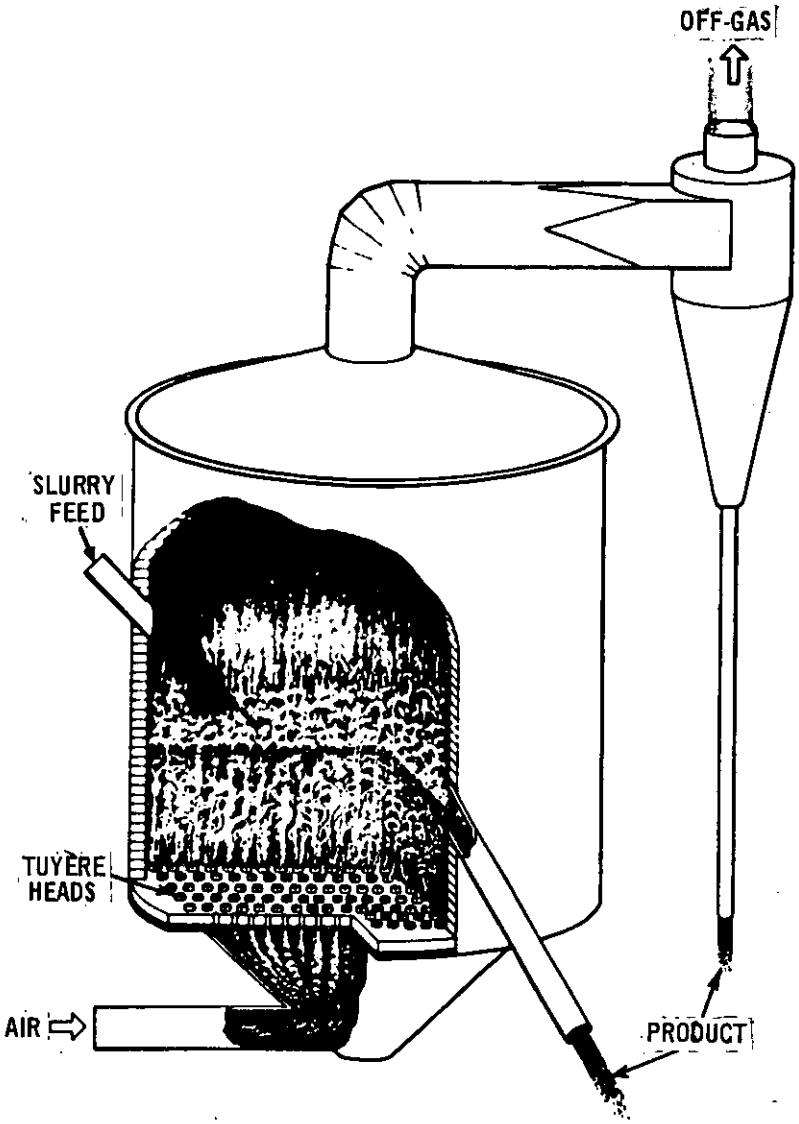

Figure 3-26 Fluid-bed roaster.[4]

in pyrometallurgical installations, are more common.

As with the flash roaster, there is a significant dust carryover in the effluent stream of the fluid-bed system. As much as 85 percent of the charge is collected by a series of devices (waste heat boilers, cyclones, and electrostatic precipitators) and either recycled for further desulfurization or combined with product calcine.[1]

Fluid-bed roasters are similar to flash roasters in their capability of producing a low total sulfur content calcine as shown in Table 3-3.

A study made by the Toho Zinc Company, Ltd., with the purpose of further lowering the residual sulfur content of the product calcine from fluid-bed roasters shows that, as the dust-laden gases proceed further from the roaster, the sulfate sulfur content of the entrained dust increases, although the sulfide content shows no appreciable change.[3,8] This phenomenon can be seen in Table 3-4.

Consequently, unless sufficient retention time is allowed within the roaster combustion chamber to complete the desired desulfurization reactions, the material will be carried over in the gas stream where it will undergo reaction within the waste heat boiler, and subsequent dust collection systems.[8] Due to the lower reaction temperatures in these subsystems, significant amounts of sulfates can be formed.

Normal practice for typical smelters is to combine calcines from the roaster and the dust collecting systems. Based on Table 3-4, the resulting calcine in some cases will average approximately 2.5% sulfur, primarily in sulfate form. However, the Toho Zinc Company study indicates that it is possible to design a roaster and dust collection system to both minimize dust carryover and sulfate formation. Minimizing dust carryover minimizes the amount of material which will be exposed to undesirable roasting condi-

Table 3-3 CALCINE SULFUR CONTENT OF TYPICAL SMELTERS USING FLUID-BED ROASTERS[9, 10, 11]

Location	Type Roaster	Type Plant	Concent-rate(s) % Sulfur	Sulfur (Sulfides)%	Sulfur (Sulfates)%	Sulfur (total)%
West Germany	Fluid-bed	Electro.	32.1	0.1	2.4	2.5
U. S.	Fluid-bed	Electro.	30.65	0.3	2.25	2.55
Japan	Fluid-bed	Electro.	31.7	0.3	2.1	2.4

Table 3-4. CALCINE SULFUR CONTENT,%[3]

Material	Sulfate Sulfur	Sulfide Sulfur	Total Sulfur
Concentrate		32.5	32.5
Bed overflow	0.2	0.3	.5
Waste heat boiler	0.8	0.3	1.1
Cyclone	2.5	0.1	2.6
Precipitator	5.5	0.1	5.6

tions, and rapid cooling of the off-gases in a boiler minimizes the time during which undesirable reaction conditions will cause sulfate formation. Thus, the results of this study and subsequent commercial application show that it is possible to produce a calcine in a fluid-bed roaster with below 1.5 percent total sulfur.[8] Table 3-5 gives the calcine sulfur distribution at the Toho installation.

Various types of roasting systems have production advantages and disadvantages depending upon the particular application. For instance, the multiple-hearth system has a lower calcine production rate than the flash and fluid-bed systems, but there is less dust in the effluent stream, thereby reducing the performance requirements for particulate control systems. The multiple-hearth permits the preferential volatilization of impurities such as lead sulfide (PbS) and cadmium sulfide (CdS). This ability to eliminate most of the major impurities is very important where calcine purity is important, as in electrolytic reduction. Also, it reduces the impurity elimination load on the sintering operation for pyrometallurgical reduction. However, due to the high gas volume, the multiple-hearth roaster tends to produce a significant amount of sulfate sulfur which is detrimental to efficient pyrometallurgical reduction.

Similarly, flash and fluid-bed roasters have an advantage over the multiple-hearth system in their greater production rates and their ability to produce a lower total sulfur calcine. Data on flash roaster sulfur elimination capability show that they can produce a calcine as low as 0.83 percent sulfur.[6] Similarly, data on more modern fluid-bed roaster operations indicate a product

calcine as low as 1.5 percent sulfur can be produced from these systems.[8] However, the exact percentage elimination of sulfur during roasting will be a function of the sulfur content of both the concentrate and the calcine. The percent of total input sulfur remaining in the calcine will vary and will normally range from 3 to 7 percent of the concentrate sulfur.[1]

Typical zinc roaster operating parameters are summarized in Table 3-6.

Table 3-5. TOHO ZINC CALCINE ANALYSIS,%[8]

	Reactor Overflow	Carry-Over	Average Reactor Carry-Over
Sulfide Sulfur	0.27	0.23	0.25
Sulfate Sulfur	0.45	1.71	1.00
Total Sulfur	0.72	1.91	1.30

Table 3-6 Summary of Typical Zinc Roaster Parameters[1]

Type of Roaster	Operating temperature°F	Feed Rate tons/day	$\%SO_2$ in off-gas	Residual % Sulfide in Calcine	Residual % Sulfate in Calcine	Residual % Total S in Calcine
Ropp	650°C	45	1 max			5-9
Multiple-hearth	690°C	100	5.5	0.5-1.0	1.4	2.4
Flash	980°C	150	10	0.1-5	0-2.5	2.6
Fluid-bed	1000°C	225	12	<0.1	0-2.5	2.6

3,1.2.2 Sintering

Summary --

The purpose of sintering is twofold except where a combined operation of roasting and sintering is performed. First, the lead and cadmium impurities are volatilized and discharged into the effluent stream. These impurities are captured in particulate control systems and processed to recover metal. Second, sintering agglomerates the charge into a hard permeable mass suitable for feed to a reduction system.

By decreasing the amount of residual sulfur in the calcine to the sintering operation, it is possible to minimize SO_2 emissions from the sintering operation. It is possible to decrease emissions from sintering by perhaps 50% by decreasing the residual sulfur content of the calcine in typical pyrometallurgical operations from 3 percent to 1.5 percent sulfur. The concentration of SO_2 in the off-gases from the sintering operation normally range from 400 to 3000 ppm when zinc calcines are sintered.

When zinc concentrates are roasted in a sintering machine using the Robson process, the concentration of SO_2 in the off-gases is normally in the range of 2.5 percent. However, the off-gases from the sintering machine can be upgraded to approximately 6 percent SO_2 if the sintering machine is equipped with a gas recirculation system. This places all sulfur emissions in a single gas stream of high SO_2 content.

General Discussion --

Several sintering techniques are now being used by the domestic zinc industry:

1. The sintering of dead-roasted concentrates with coke or coal.

2. The sintering of green concentrates diluted with sinter returns.

3. Sintering of partially roasted concentrates.

Although the first method predominates in the domestic industry, the latter two techniques are still being used, particularly in foreign installations.

The sintering machine incorporates bar or grate-type pallets which are joined to form a continuous metal conveyor system. Calcine, recycled sinter, coke or oil, sand and other inert ingredients are distributed on the pallets and ignited. The depth of the layer, the charge composition, and the machine operating parameters vary and are dependent upon the desired physical properties of the sinter product. Downdraft-type sintering machines (Figure 3-27) are used in the zinc industry, with the exception of those updraft machines used in conjunction with the Imperial smelting process in foreign smelters. A discussion of the Imperial smelting process is given in Section 3.1.4. The downdraft machine is distinguished by the air supply passing downward through the sinter bed.

In typical domestic pyrometallurgical operations, from 3 to 7 percent of the concentrate sulfur remains in the calcine feed to the sintering machine,[1] predominately in the form of sulfate as shown in Table 3-7. Seventy-five to ninety percent of this remaining sulfur, whether in sulfide or sulfate form, decomposes to form SO_2 in the sinter machine

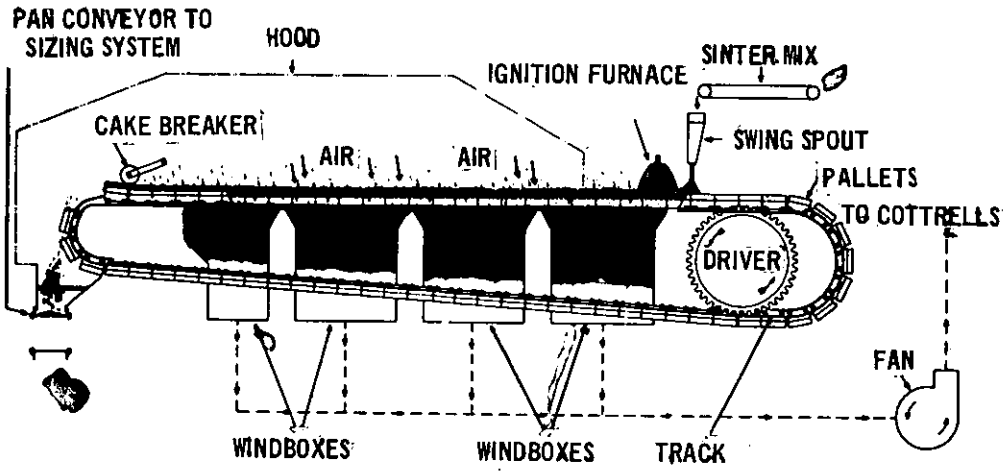

Figure 3-27 Downdraft sintering machine.[13]

Table 3-7 SULFUR CONTENT OF TYPICAL ZINC SINTER FEED [14, 15, 16, 17, 18]

Plant	Total Calcine Sulfur, %	Calcine Sulfide Sulfur, %	Calcine Sulfate Sulfur, %	Off-gas, PPM SO_2	Total Sinter Sulfur, %
A	2-3	0.5	<2.0	<800	
B	1-4			<1000	0.2
C	*5			3000	0.4

*Ropp Roasters used will cease operation in 1973.

off-gas.[12] Typically, the resulting weak sinter machine effluent stream contains approximately 1000 ppm SO_2, but the concentration of SO_2 can range from 400 to 3000 ppm SO_2 depending upon the total sulfur content of the feed stock.[14, 15] In sintering machines which process raw concentrates, the off-gas concentrations can range up to 2.5 percent.[1] The single domestic smelter using this operation will shut down in the near future.[19]

The physical properties required of sinter vary depending on the type of reduction system used. For horizontal retort reduction, the sinter need not possess high physical strength. However, the horizontal retort is being phased out as a viable reduction system. The strength properties are very important in the case of electrothermic furnaces.[5] Each individual piece of sinter may be required to support a column of sinter equal to the height of the furnace despite being weakened by the extraction of its zinc. Therefore, the sinter mix usually requires the addition of silica to increase hardness and strength of the sinter mass and thus prevent sinter collapse.

In other vertical reduction furnaces such as the vertical retort, high initial sinter strength is not a major requirement since the product sinter is usually briquetted before charging to the furnace. The ability of the vertical retort furnace to use a soft briquetted sinter permits the application of both conventional sintering and roast-sintering techniques for the processing of zinc concentrates. Roast-sintering permits both elimination and control of sulfur during the sintering operation.

When zinc calcines are sintered, the sulfur emissions from a sinter machine are primarily determined by the input calcine sulfur content, although some emissions result from the zinc sulfate liquor added to the

sinter mix. The ideal situation from the point of view of sulfur dioxide emission control would be to eliminate as much sulfur as technically possible during the roasting step. This would minimize the sintering operation as a SO_2 emission source. Based on the capability of fluid-bed and flash roasters discussed in Section 3.1.2.1, a calcine averaging 1.5 percent toal sulfur, rather than one of approximately 3 percent total sulfur as is presently practiced within the domestic industry, could be produced. Thus, if roasting in a pyrometallurgical operation is carried out to provide a 1.5 percent residual sulfur content in the calcine, then a corresponding decrease in sulfur emissions to the atmosphere by sintering would be realized. Table 3-8 shows electrolytic zinc smelter roaster data indicating a 1.5 percent residual sulfur capability.

The elimination of sulfur in the calcine would require additional coke or coal to accomplish sintering, and would increase the cost of sintering. However, there are no insurmountable technical problems with this approach.

As stated earlier, one domestic zinc smelter has practiced the roast-sintering technique (Robson process) since 1951,[20] but no attempt to control SO_2 emission from this operation has been made. The sinter from the top 20 percent of the sinter bed of this operation does not have adequate physical properties to allow direct charging to a reduction furnace; thus, a two-pass sintering operation is needed to produce an acceptable sinter product for that portion of the charge.[21] The second pass employs coke sintering.

Table 3-8 CALCINE PRODUCED AT TYPICAL ELECTROLYTIC ZINC SMELTERS.[3, 6, 7, 8]

Plant	Type Roaster	Total Feed Sulfur, %	Calcine Sulfide Sulfur, %	Calcine Sulfate Sulfur, %	Total Calcine Sulfur, %
A	Flash	31	0.1	0.73	0.8
B	Fluid-bed	32	0.25	1.25	1.5
C	Flash	32	0.8	1.3	2.1
D	Fluid-bed	33	0.2	1.1	1.3

The production of soft sinter by the Robson process, from green concentrates, for vertical retort extraction has been used at the Avonmouth facility of Imperial Smelting Corporation, Ltd., of England.[22] In this case, downdraft sintering machines simultaneously roast and sinter zinc concentrates. However, an important feature of these machines is their ability to produce a strong SO_2 effluent stream by the use of gas recirculation techniques.[22]

As in the conventional zinc roasters discussed earlier, the reaction in the sinter machine is autogenous and fueled by the sulfur of the zinc concentrate. The sulfur content of the charge at Avonmouth averages 5.5 to 6%.[22] Once initiated, the reaction proceeds autogenously, and the heat generated causes the fusion of the material into a permeable mass. At the discharge end of the machine, the sulfur content of the sinter ranges between 0.5 and 1.0%, and the SO_2 concentration of the effluent gas at Avonmouth ranges between 6.5 and 7.5%.[22]

The basic principle of the recirculation technique is the ducting of the weak ignition gases (feed end gases) and cooling gases (discharge end gases) into the areas where the primary roasting reaction takes place; see Figure 3-28. These gases contain from 1 to 2% SO_2[22] and sufficient oxygen to permit additional combustion. In effect, the weak gases which would normally be emitted to the atmosphere are thus concentrated to produce the resultant strong SO_2 stream. The gas stream generated by this method contains up to 7.5% SO_2.[22] Because the gases are recirculated, a smaller volume of gas (compared to normal sintering) is discharged.

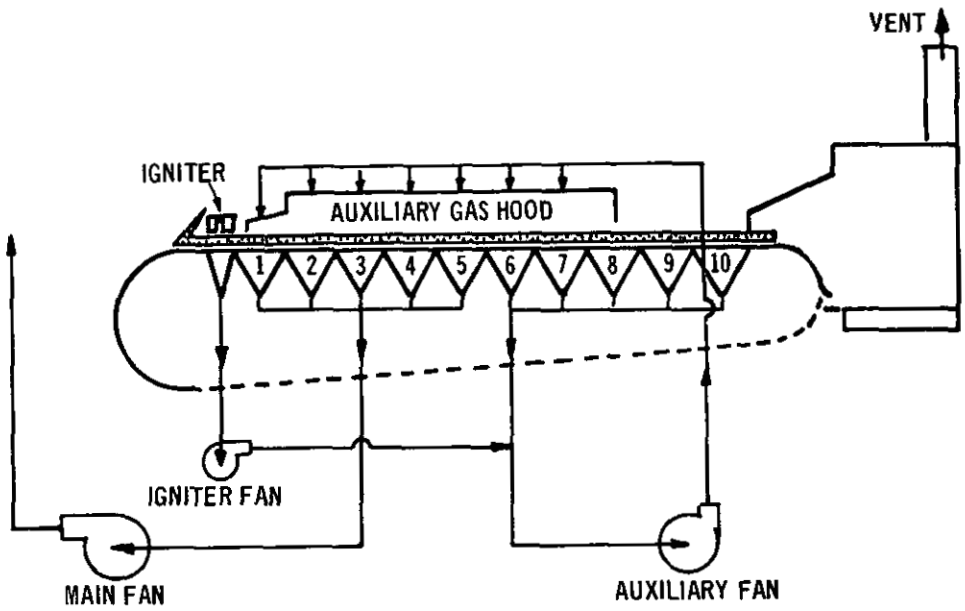

Figure 3-28 Zinc downdraft sintering machine with gas recirculation.[22]

This operation is not without some problems. First, since the gases from the feed and discharge ends have undergone partial reaction, there is a smaller concentration of free oxygen which reduces the efficiency of the sintering reaction. This is partially offset by recycling a large percentage of the sinter. Second, since the gases have a high dust loading, the deposit of entrained dust of the recycled stream in the sinter bed can reduce sintering efficiency by decreasing permeability of the bed and possibly causing channeling within the bed. Again, sinter recycle can offset this problem. However, the major factor to be considered is the loss of one of the two primary functions of sintering as it is used in the domestic industry: the elimination of lead and cadmium. The lead and cadmium removed from the sinter is entrained in the sinter machine effluent. Consequently, a significant portion of these impurities would be recaptured during recirculation by the filtering action of the sinter bed. To prevent recapture of the impurities, a high-efficiency particulate removal system is required in the recirculating stream. In addition, any chlorides which may be present in the sinter feed stock could disturb acid plant operation by poisoning the catalyst, if present in sufficient amounts. However, as discussed in Section 4.1 - Sulfuric Acid Plants, if this problem is recognized during the design of the acid plant, various techniques can be utilized in the gas cleaning section preceding the acid plant to minimize and essentially overcome this problem.

The technique of Robson process sintering, while using gas recirculation, is basically suited only for the production of sinter

to be used in the horizontal and vertical retort furnaces. In the latter system the sinter is briquetted to improve its strength characteristics. An exceptionally hard and strong sinter is required for electrothermic furnace reduction with the sinter characteristics of high porosity and density being less important. Sintering for these systems is performed in a two-pass operation even after roasting. The first step provides a soft, relatively pure sinter and the second step, with the addition of 8 to 10% silica,[17] produces an extremely hard sinter. Therefore, there is some doubt that even briquetting of the product sinter of the Robson process will produce an acceptable sinter for the electrothermic furnace.

The advantage of this process, however, is that all sulfur-laden gases from the roasting and sintering operation are contained in one strong stream of 6% SO_2. The problems encountered by facilities using this technique have been essentially resolved, and as a result the sintering of green concentrates using gas recirculation is considered a viable technique to make the sintering process amenable to air pollution controls.

3.1.2.3 Zinc pyrometallurgical reduction processes

Summary--

The three reduction systems in use in the domestic industry are the horizontal and vertical retort furnaces and the electrothermic furnace. The future outlook of pyrometallurgical systems indicates that the horizontal retort will fade away. The remaining systems will continue in operation but less emphasis will be placed upon their improvement.

Sulfur which may be introduced into the reduction system via the sinter is primarily in a sulfate sulfur form and tends to decompose to a metal sulfide, usually iron sulfide, in the highly reducing atmosphere. Thus, SO_2 emission from typical reduction systems averages less than 50 ppm.

The pyrometallurgical process does have an advantage over electrolytic extraction in its ability to process recycled materials, most of which cannot be processed in an electrolytic circuit. Approximately 30 percent of the secondary (recycled) zinc production in 1973 was performed at primary pyrometallurgical smelters.

General Discussion--

The basic reactions which take place in the reduction furnace are:

$$ZnO + CO \rightarrow Zn\ (Vapor) + CO_2$$

$$CO_2 + C \rightarrow 2CO$$

Either coke or coal provides the carbon reductant, with the choice being determined by the physical properties required in the final product.[5] Any sulfur present in the sinter feed is usually in a sulfate form and only a small fraction is converted to SO_2 during reduction.[1] The sulfur usually shows up as iron or zinc sulfide in the residue from the furnace.

Pyrometallurgical reduction has a definite advantage over electrolytic zinc operations in its ability to process secondary and scrap zinc materials. According to Bureau of Mines data, approximately 80,000 short tons of scrap materials were processed in primary pyrometallurgical smelters in the U.S. in 1972.[23] This is approximately 30 percent of the total 1972 secondary zinc production. Of these secondary materials a significant quantity will contain zinc chloride which can be detrimental to some electrolytic operations.[5] However, these materials can be combined in the sintering machine feed of pyrometallurgical smelters, thereby permitting the elimination of the chlorine in the off-gases.

The horizontal, or Belgian, retort is the oldest reduction system used in the zinc industry and is presently being replaced by more efficient and more productive systems. The furnace consists of a series of tubular refractory receptacles with a ratio of length to diameter of between 4 and 7.5[5] (Figure 3-29). The length of each retort is dictated by the hot strength of the refractory materials. A large number of these retorts are placed horizontally within an enclosure with the retort face exposed to the atmosphere. An open distillation condenser is placed over the retort face after charging. The refractories are fired externally by passing combustion products through the areas between the retorts.

The external firing and batch nature of the horizontal retort are only two of the unattractive features which have added to the

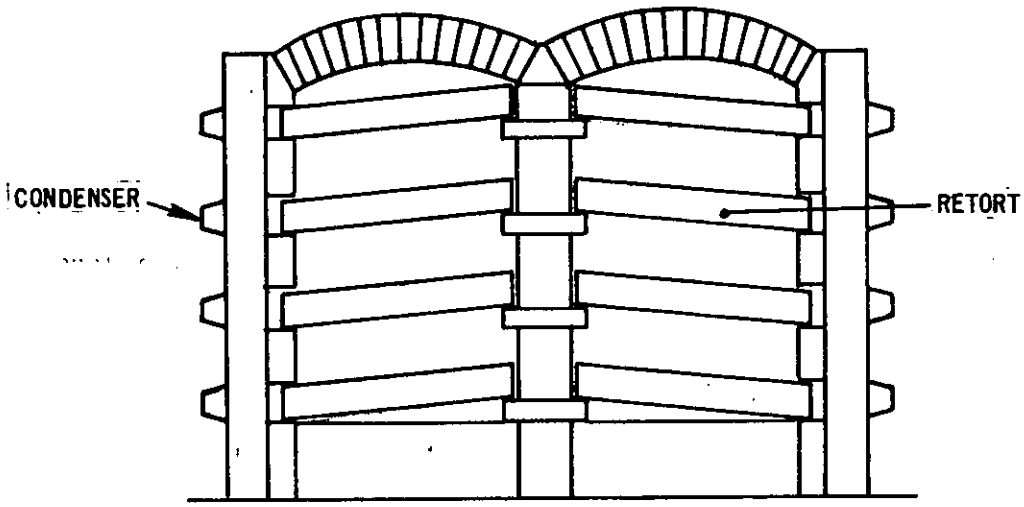

Figure 3-29. Horizontal retort.

demise of the system. In addition, each retort produces only about 100 pounds of zinc every 48 hours.[24] Therefore, to produce significant quantities of zinc, a furnace must incorporate many retorts, and this requires large and expensive work crews.

Though SO_2 emissions from the system are extremely small, these systems are, however, major particulate emission sources. Because each retort is a particulate emitter, a massive control system would be required for effective control. The horizontal retort, however, places few restrictions on the input sinter properties. It requires only a soft, friable, and poor-appearing sinter; thus, the sinter production need not be tied to a particular roasting or sintering process.

The major problems facing this sytem are excessive operating cost, low productivity, and difficulty in controlling particulate emissions;[17] therefore, its continued existance is not expected in the future.

The vertical retort furnace, developed in the 1920's by the New Jersey Zinc Company, like the horizontal retort is externally fired. However, unlike the horizontal retort, its operation is semi-continuous and is automated to a moderate degree.

The furnace has a vertical retort shaft which allows the charge, with the aid of gravity, to pass downward through the shaft and be expelled from the bottom of the furnace (Figure 3-30). The charge cannot be a granular, loose, and soft mixture as in the horizontal retort, but

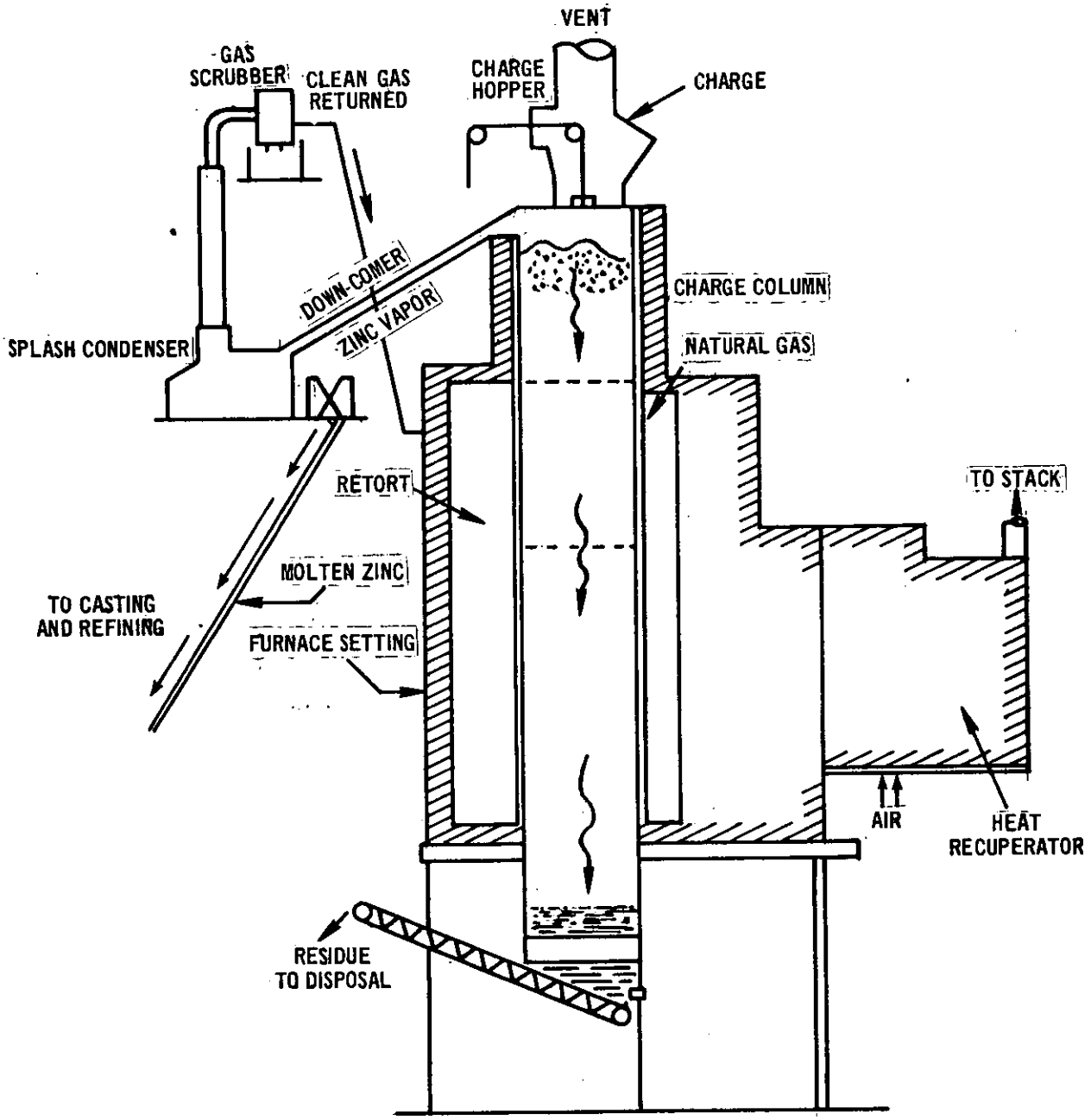

Figure 3-30. Vertical retort furnace.

must be either a hard sinter or briquetted. It is the briquetting step that is the chief disadvantage of this system, since it is an expensive operation.[24]

However, the ability to use briquetted sinter feed can also be an advantage, because it permits the use of a soft sinter produced either by coke sintering or by roast-sintering. This latter sintering technique is being used by the Avonmouth, England, smelter of Imperial Smelting Corporation, Limited,[22] for the production of zinc sinter for their vertical retort furnaces.

SO_2 emissions from the vertical retorts average less than 50 ppm.[14] Particulate emissions are evident only during charging which will last approximately one minute. The vertical retort furnace eliminates most of the major faults of the horizontal system and can be adapted to automation to reduce operating costs. Thus, it appears that this system will remain in use for the foreseeable future.

The electrothermic smelting system was developed by the St. Joe Minerals Corporation and began commercial operation in 1936.[24] It is the newest purely zinc-smelting furnace. The furnace is basically a vertical, refractory-lined cylinder. Graphite electrodes protrude into the furnace shaft, and the furnace derives its reaction heat from the resistance of the furnace charge to the current flow between the electrodes (Figure 3-31). Sufficient temperatures are generated, up to 1400°C, to cause vaporization of the zinc within the sinter. As in the vertical retort furnace, gravity is relied upon to move the charge downward through the furnace shaft. Unlike other furnaces, however, an unusually hard sinter is required; silica (sand) is usually added to the

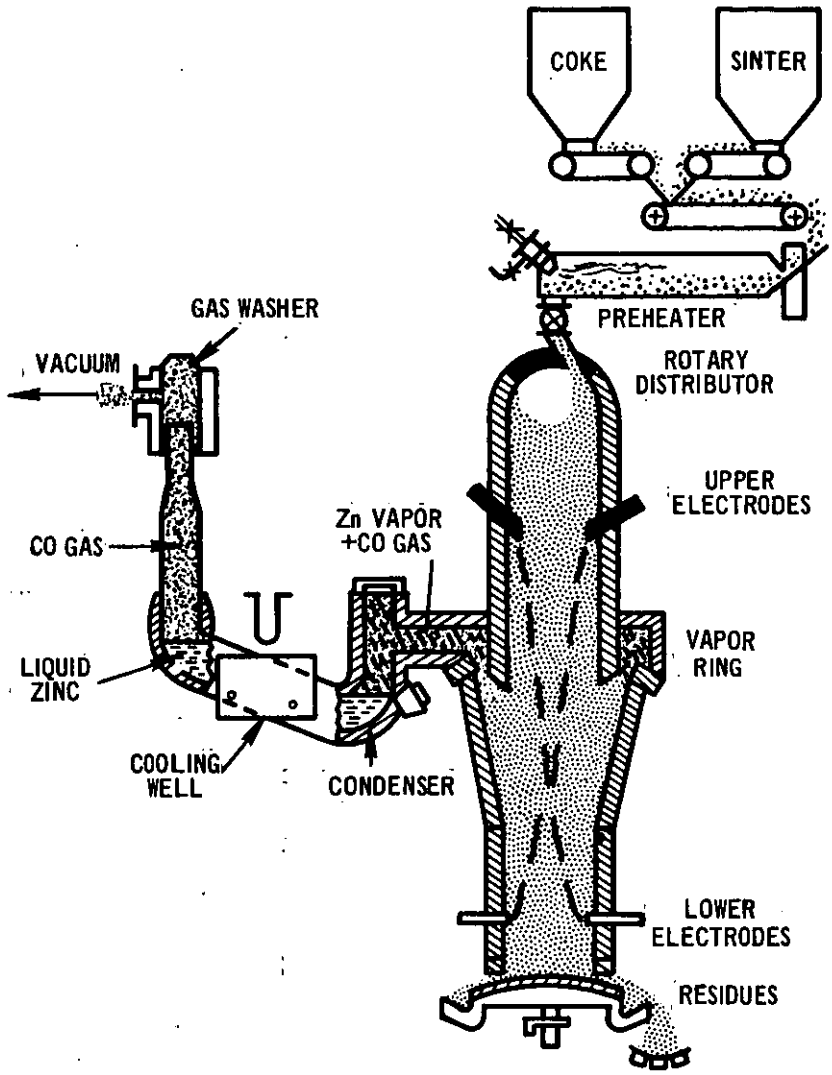

Figure 3-31. Electrothermic furnace.[24]

sinter mix to increase the strength of the sinter. Indications are, therefore, that the strength requirement limits the type of sintering which may be used in conjunction with this system to the coke sintering method. It is doubtful that roast-sintering can produce a hard sinter that is acceptable to the electrothermic furnace without an expensive briquetting step or without a second coke sintering pass to increase strength properties of the sinter.

The electrothermic furnace has a number of advantages over other pyrometallurgical zinc processes. First, it is a continuous operation and is amenable to automation. Second, it can readily process secondary zinc scrap and zinc residue materials. Finally, the furnace has practically no SO_2 or particulate emissions.

3.1.2.4 Electrolytic zinc extraction

Summary--

Electrolytic extraction is the second basic route for the manufacture of metallic zinc. Greater than one-half of the free world's production of zinc is derived by electrolytic extraction. The advantages of electrolytic extraction are its amenability to automation and its ability to produce a high-grade metal without subsequent refining. However, perhaps its greatest advantage is the relative ease with which air pollution problems can be controlled. The only source of SO_2 emissions during this process is the roasting step. As discussed in Section 3.1.2.1, typical zinc roasting operations will produce an emission stream of greater than 4 percent SO_2. The remaining process steps do not result in SO_2 emissions.

Most zinc concentrates can be processed in electrolytic zinc smelters. However, there are a limited number of impurities which can cause extraction problems: concentrates containing germanium, cobalt, tellurium, iron and other minor elements require special treatment and are, therefore, less desirable for electrolytic extraction.

General discussion--

Electrolytic zinc extraction represents approximately 56 percent of the free world's zinc production capacity. Sulfur dioxide emission control from this process depends primarily upon the generation of a strong SO_2 roaster effluent stream through the use of modern roasting technology. A detailed discussion of modern roasters is contained in Section 3.1.2.1 - Roasting.

During electrolytic zinc recovery, the zinc sulfide concentrate is preroasted to produce an impure zinc oxide, called calcine. Through the use of modern roasting systems, the total residual sulfur content can be reduced to as low as 1.5%.[8] The residual sulfur is not emitted as SO_2 in any later processing step.

The preroasted calcine is transferred to a leaching operation where the calcine and dilute sulfuric acid are introduced into a series of tanks. The impurities are selectively precipitated through the addition of a small amount of ZnO dust. The leaching step varies somewhat from plant to plant, dependent upon concentrate impurities, but the basic process of selectively precipitating the impurities from the leach solution remains the same (Figure 3-32). After final filtration, the zinc-bearing solution is subjected to electrolysis to produce a high-quality zinc metal.

It should not be concluded that electrolytic zinc extraction is economically suited for all locations and for all production requirements. First, electrolytic extraction depends upon both the availability and cost of electrical power. The availability of electrical power has been partially solved by one domestic smelter through the use of natural-gas-fired steam boilers and turbine generators to produce electrical power.[6]

Second, to fill consumer requirements for lower quality prime western or intermediate-grade zinc, which is the initial product from pyrometallurgical processes, electrolytic zinc requires debasing. The required trace alloying of electrolytic zinc thus creates a higher cost

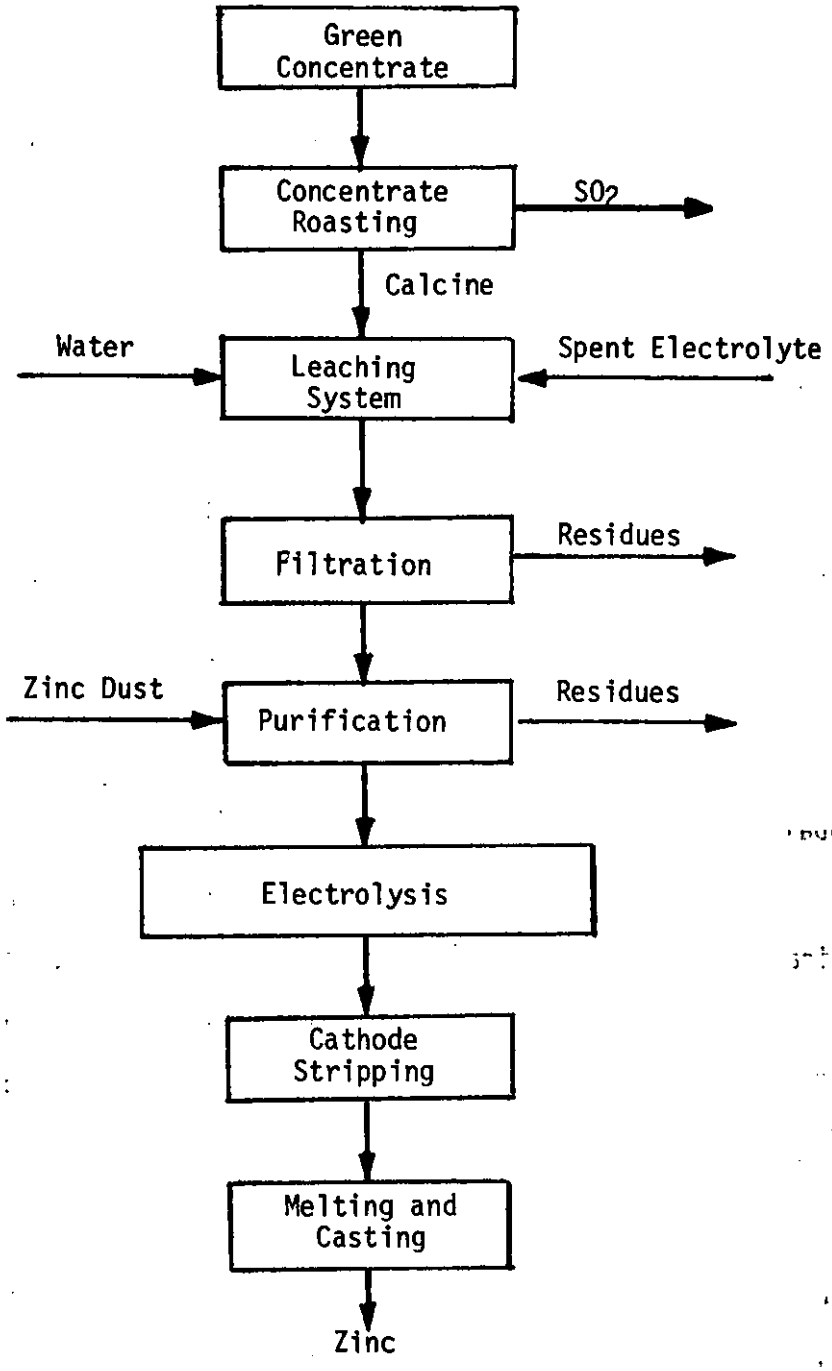

Figure 3-32. Electrolytic zinc extraction.

product rather than a cheaper one.

In addition, electrolytic zinc extraction is basically limited only to the processing of concentrates. The processing of non-oxide residues, metallic residues, and recycle scrap is not possible in most cases.

Furthermore, impurities which can exist in zinc concentrates can present problems in electrolytic extraction. The most common impurities found in typical concentrates are lead, cadmium, copper, arsenic, antimony, iron and precious metals. Most of these impurities can be precipitated from the leach solution without significant difficulty. Other impurities, less common yet more troublesome to electrolytic extraction, are germanium, cobalt, and tellurium. Germanium in concentrations greater than 1 part per 10 million can make commercial electrolytic extraction difficult.[5] Cobalt, which can be tolerated up to 10 mg/liter, is the most troublesome impurity to remove and will magnify the effects of germanium when in the same solution. Tellurium will deposit with the zinc, thus lowering the purity of the product metal. Concentrate containing these impurities can be processed; however, special variation in the leaching and purification process plus strict processing controls are required, which will add to the cost of production.

Of all zinc extraction processes, however, electrolytic extraction is the most attractive from the point of view of SO_2 and particulate emission control. There is only one operation, that of roasting, which generates SO_2 emissions.

References for Section 3.1.2

1. System Study For Control of Emissions Primary Nonferrous Smelting Industry; Author G. McKee & Co.; PHS-HEW Contract No. PH 86-65-85, Vol. I, II, III.

2. Restricting Emissions of Dust and Sulfur Dioxide in Zinc Smelters: VDT-RICHTLINEN, VDI Report No. 2284, Reproduction by U.S. Dept. of Health, Education and Welfare.

3. Heino, K. H., R. T. McAndrew, N. E. Ghatas, B. H. Morrison, "Fluid Bed Roasting of Zinc Concentrates and Production of Sulfuric Acid and Phosphate Fertilizer at Canadian Electrolytic Zinc, LTD.," AIME World Symposium on Mining and Metallurgy of Lead and Zinc, Vol. II, AIME 1970, P. 144-176.

4. J. R. Boldt; The Wining of Nickel; The International Nickel Co. of Canada, Ltd.; Longman's Canada, Ltd.; Toronto, Canada; 1967.

5. Kirk-Othmer Encyclopedia of Chemical Technology, "Zinc and Zinc Alloys," 2nd edition, John Wiley and Sons Inc., N.Y., Vol. XX, pp 555-603.

6. Cunningham, George H., J. C. Allen, "Electrolytic Zinc at Corpus Christi, Texas," Trans. AIME, Vol. 159, 1944, pp 194-209.

7. Reid, J.-H., "Operation of a 350-ton-per-day Suspension Roaster at Trail, B.C." Pyrometallurgical Processes in Nonferrous Metallurgy. Ed. by J.N. Anderson and P.E. Queneau, Gordon and Beach 1967.

8. Okazaki, M., Y. Nakane, and H. Noguchi, "Roasting of Zinc Concentrate by Fluosolids Systems as Practiced in Japan at Onahama Plant of Toho Zinc Company, Limited, Pyrometallurgical Processes in Nonferrous Metallurgy, ed. by J. N. Anderson and P. E. Queneau, Gordon and Beach 1967, pp 19-45.

9. Banes, O.H., R. K. Carpenter, C. E. Paden, "Electrolytic Zinc Plant of American Zinc Company," AIME World Symposium on Mining and Metallurgy of Lead and Zinc, Vol. II, AIME (1970) pp 308-328.

10. Wuthrich, H. R., Von Ropenack, A., "The Electrolytic Zinc Plant of Ruhr - Zink GMBH," AIME World Symposium on Mining and Metallurgy of Lead and Zinc, Vol. II, AIME (1970) p 247-268.

11. Noriyama, E., Y. Yamomoto, "Akita Electrolytic Zinc Plant and Residue Treatment of Mitsubishi Metal Mining Company, Ltd.," AIME World Symposium on Mining and Metallurgy of Leach and Zinc, Vol. II, AIME (1970) pp 198-222.

12. Private communication, St. Joe Minerals and EPA, letter dated Dec. 19, 1972.

13. Commercial advertising brochure; St. Joe Lead Co. - Zinc Division; Monaca, Pennsylvania.

14. Emissions Test Results, Commonwealth of Pennsylvania, N.J. Zinc Co., Palmerton, Pa., 1970.

15. Private communication ASARCO, Amarillo, Texas, letter dated Oct. 12, 1972, from ASARCO, N.Y., to EPA.

16. Najarian, H.K., Kail, F. Peterson, and Robert E. Lund , "Sintering Practice at Josephtown Smelter," Trans. AIME, Vol. 191, Journal of Metals, Feb. 1951.

17. "The N.J. Zinc Company," Represented from Mining Engineering, Dec. 1953 Copyright 1953, AIME, Inc.

18. Trip Report to National Zinc Company, Feb. 1, 1972.

19. "Phase Out at Blackwell, phase in at Songet," Engineering and Mining Journal, Sept. 1972, pp 123-125.

20. Lee, A. L., Jr., "Sintering Zinc Concentrates on the Blackwell 12 x 168 ft. Machine," Journal of Metals, Dec. 1963, pp 1631-1633.

21. Blackwell Zinc Company, AMAX Lead and Zinc Division, American Metals Climax, Inc., Pamphlet (1970).

22. Broad, A. V., D. A. Shutt, "Sintering Practice at the Avonmouth Works of Imperial Smelting Corporation Ltd." Sintering Symposium, Aus. Inst. Min. Met. Melbourne, 1958, p 193-218.

23. Private communication, Bureau of Mines, Mr. H. Babitzki and EPA, Mr. C. Darvin, June 25, 1973.

24. "The Crisis in U.S. Zinc Smelting Spells Trouble for the Mining Industry," Engineering and Mining Journal, Feb. 1970, pp 69-74.

25. Morgan S.W.K., S.E. Woods, "Application of the Blast Furnace to Zinc Smelting," Metallurgical Reviews No. 156.

26. Semrau, K.T., "Control of Sulfur Oxide Emission From Primary Copper, Lead and Zinc Smelters - A critical review," Journal of the Air Pollution Control Association, Vol. 21, No. 4, April 1971.

27. Lund, R. E., J. F. Winters, B. E. Hoffacker, T. M. Fusco and D. E. Warnes, "Josephtown Electrothermic Zinc Smelter of St. Joe Minerals Corporation," AIME World Symposium on Mining and Metallurgy of Lead and Zinc, AIME (1970), p. 549-580.

28. McBeam, K.D., "Roasting, Sintering, Calcining, and Briquetting," in C.H. Mathewson, Zinc, Runhold Publishing Co., N.Y. (1959).

29. Woods, S.E., C.F. Harris, "Heat Transfer in Sinter Roasting," Symposium on Chemical Engineering in the Metallurgical Industries (1963: Inst. Chem. Engrs.).

30. Harris C.F., J. L. Bryson and K.M. Sarkar, Effect of Compositional Vaustron on the Quality of Zinc-Lead Sinter Extract from Transactions/ Section C of the Institute of Mining and Metallurgy, Vol. 76, 1967.

31. Woods, S.E. and C. F. Harris, Factors in Zinc-Lead Sinter Production, Sintering Symposium, pp. 193-218, Aus. Inst. Min. Met. Melbourne 1958.

3.1.3 Lead Smelting

Lead is usually found in nature as a sulfide ore containing small amounts of copper, iron, zinc and other trace elements. It is normally concentrated at the mine from an ore of 3 to 8 percent lead to a concentrate of 55 to 70 percent lead. Typically, between 13 and 19 percent by weight of the concentrate is sulfur.

Normal practice (domestic and foreign) for the production of lead from lead sulfide concentrates includes the following operations (See Figure 3-33):

1. Sintering in which the concentrate lead and sulfur are oxidized to produce lead oxide and sulfur dioxide. Simultaneously, the charge material made up of concentrates, recycle sinter, sand and other inert materials is agglomerated to form a dense, permeable material called sinter.
2. Reduction of the lead oxide contained in the sinter to produce molten lead bullion.
3. Refining of the lead bullion to eliminate impurities.

The sintering operation normally eliminates as sulfur dioxide up to 85% of the concentrate sulfur.[1] Sintering machines are operated with either a single off-gas stream or two off-gas streams. In the case of the single-stream operation, the effluent stream has an SO_2 concentration of about 2 percent without gas recirculation.[1] With gas recirculation the concentration of SO_2 is in the range of 6%.[9,10,12] In dual-stream operation, the strong off-gas stream has an SO_2 concentration of between 4 and 7 percent and the weak stream has an SO_2 concentration

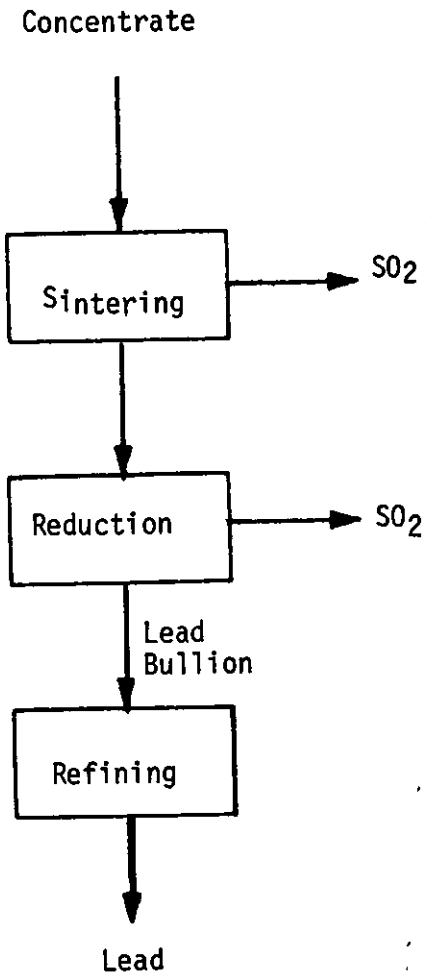

Figure 3-33. Primary lead smelting process.

of approximately 0.5 percent.[1] Single-stream operation is accomplished by ducting all process gas under the machine hood, via a single stream, to the emission point. In dual-stream operation, the stronger SO_2-laden gases at the feed end of the machine are ducted separately from the weaker gases at the discharge end of the machine.

Sinter is charged to the blast furnace periodically and typically contains up to 15 percent of the concentrate sulfur in either a sulfide or sulfate form. Emissions from the blast furnace due to oxidation of the remaining sulfide or thermal decomposition of the sulfates typically have concentrations of less than 1 percent SO_2 and represent approximately 7 percent of the concentrate sulfur. The remaining sulfur is contained in the slag or matte produced by the furnace.

The refining process consists mainly of removing the impurities of copper, gold, silver and antimony from the furnace lead bullion. The furnace bullion is transferred to a series of refining kettles where drosses are selectively removed from the bullion. The drosses, containing various impurities, are treated in a reverberatory furnace for further collection of lead and concentration of other metal values. The SO_2 emissions from refining systems are essentially zero.

A breakdown of the sulfur emissions from a typical primary lead smelter operation is summarized in Table 3-9.

The following discussion will not only review domestic production procedures and equipment, but will outline alternative processing techniques and equipment such as:

Table 3-9. TYPICAL SULFUR EMISSIONS FOR A PRIMARY LEAD SMELTER[1]

I. Sintering machine

Percentage of concentrate sulfur discharged in off-gases. . . 85%

SO_2 concentration in single-stream operation. . . . . <2%

Without gas recirculation 2%

With gas recirculation. 6%

SO_2 concentration in dual-stream operation

Weak stream 0.5%

Strong stream 4-7%

II. Blast furnace

Percentage of concentrate sulfur remaining in feed to blast furnace 15%

Percentage of input sulfur discharged in gas stream . . . 7%

Percentage of input sulfur discharged in waste. 8%

SO_2 concentration in gas stream . . . . . <0.2

III. Refining operations

Percentage of concentrate sulfur discharged 0

1. The use of sintering machines with off-gas recirculation systems which permit the generation of a single strong SO_2 stream.
2. The use of electric smelting furnaces which eliminates approximately 90 percent of the concentrate sulfur in a strong SO_2 gas stream.

3.1.3.1 Sintering

Summary--

The basic purpose of sintering is to convert the lead sulfide concentrate (PbS) into an oxide or sulfate form, while simultaneously producing a hard porous clinker material suitable for the rigid requirements of the blast furnace.

During sintering approximately 85 percent of the concentrate sulfur is removed as SO_2. Process gases from the machine are currently handled in either of two methods by the domestic industry. Either a single weak stream is taken from the machine hood at about 2 percent SO_2 or two streams are taken from the machine hood: one weak stream taken from the discharge end of the machine and one strong stream taken from feed end of the machine. The weak stream has a SO_2 concentration of less than 0.5 percent and the strong stream has a SO_2 concentration of 5 to 7% SO_2.

A possible solution to the elimination of the weak stream from the sintering machine is the use of weak gas recirculation. The weak gas recirculation technique is being used by a number of foreign lead and Imperial Smelting Process smelters. Weak gas recirculation will enable the sintering machine to emit a single strong SO_2 gas stream of about 6% SO_2.

General Discussion--

The sintering machine is essentially a continuous steel pallet conveyor belt moved by suitable gears and sprockets. Each pallet

consists of perforated or slotted grates. Beneath the moving pallets are windboxes which are connected to fans that provide a draft on the moving sinter charge. There are two types of sintering machines, the updraft and the downdraft machines. The systems are similar in design, construction, and operation, differing only in the direction in which the draft is placed upon the charge during sintering.

The sintering reaction is autogenous and creates temperatures of approximately 1000°C. The temperature is basically controlled by the sulfur content of the sinter charge mix. Years of sintering experimentation and practice have shown that best system operation and product quality are achieved when the sulfide sulfur content of the sinter charge is between 5 and 7 percent by weight. In order to maintain the desired level of sulfur content, sulfide-free fluxes such as silica and limestone plus large amounts of recycled sinter and smelter residues are added to the mix. The quality of the product sinter is usually determined by its brittleness (rattle index) and sulfur content. Low sulfur and high rattle index is the desired characteristic of the product sinter. Hard-quality sinter will resist crushing during discharge from the sinter machine. Undersized sinter usually indicates insufficient desulfurization and is therefore recycled for further processing.

Two techniques are currently used to remove effluent gases from the sintering machine in domestic operations. One technique will produce

a single weak stream (<3% SO_2) while the second technique will produce a strong stream (>3% SO_2) and a weak stream simultaneously. In present operations the desirability of either method of operation is basically determined by the available market for any by-product acid which may be produced. In cases where there is no available sulfuric acid market, single-stream operation is usually used, thus emitting a weak SO_2 stream to the atmosphere. In cases where there is a potential acid market, dual-stream operation is used with sulfuric acid being produced from the strong gas stream. The weak stream is emitted to the atmosphere after particulate removal. Dual-stream operation permits the smelter operator to treat the smallest gas volume which contains the greatest portion of the SO_2 gases generated in the machine. Thus the acid-producing system needs to have only the capacity to process those gases which will give the greatest economic return. Approximately 75 percent of the SO_2 emissions from the machine are contained in the strong stream.[2] However, the strong stream will make up only approximately 25 to 50 percent of the gas volume from the machine.

In both cases the latter half of the machine acts as a sinter cooling zone. This cooling zone serves two main purposes. First, it allows the subsequent handling of a relatively cool material; thus conventional conveying equipment, conveyor belts, are adequate to handle the discharged sinter. Second, potentially hazardous dust formations are minimized by cooling the product, thus decreasing the need for covering and ventilating the conveying systems. Figures 3-34 and 3-35 detail single- and dual-stream operations, respectively.

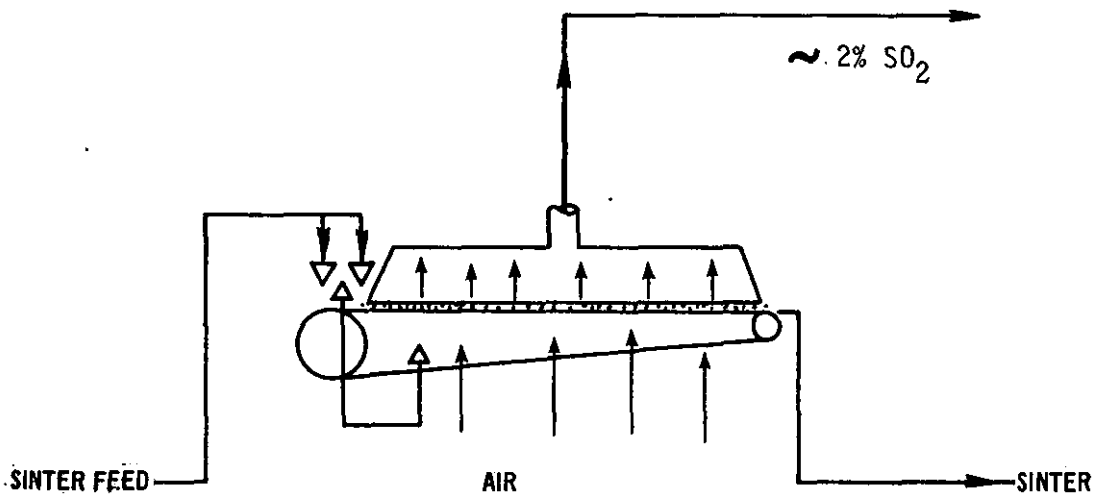

Figure 3-34. Single-stream operation.

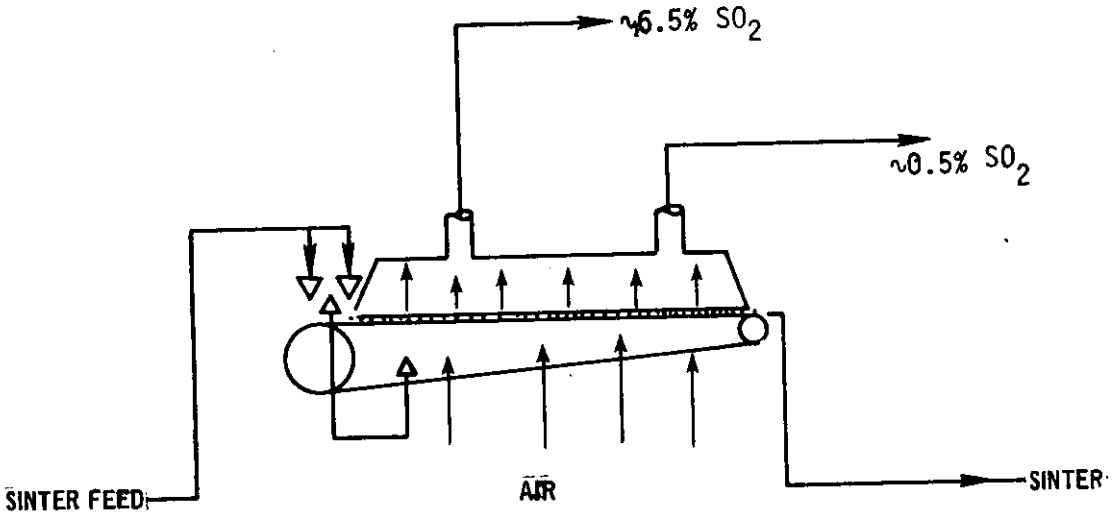

Figure 3-35. Dual-stream operation.

Within the last decade, the updraft sintering machine has gained almost total acceptance in the domestic lead industry; only one operating smelter still uses the downdraft system. The updraft machine has a number of advantages over the comparable downdraft machine. First, the sinter bed height is greater than that with the downdraft machine, thereby resulting in an increased production rate over a downdraft machine of similar dimensions.[3] This can be explained by the fact that in downdraft sintering the force on the sinter bed by the draft direction aided by gravity will cause compaction of the bed and decrease its permeability. The opposite is true with updraft sintering. The draft direction tends to decrease bed compression and increase permeability.[3]

Also during sintering, small quantities of elemental lead are produced by the following reactions:[1,3]

$$PbS + PbSO_4 \rightarrow 2Pb + 2SO_2$$

$$PbS + 2PbO \rightarrow 3Pb + SO_2$$

In downdraft sintering, this lead tends to flow downward and drop either into the machine windboxes as desired, or collect at the bottom of the sinter charge or in the machine grates. The collection of the droplets at the bottom of the charge or on the grates can lead to increased pressure drop across the sinter bed and reduced blower capacity, resulting in decreased production. In the case of updraft sintering, however, the elemental lead formations tend to solidify at their point of formation.[3] This is due to the fact that the reaction moves in an upward direction; therefore, after reaction the lower regions of the bed are cooler, and the elemental lead solidifies before reaching the machine grate area. As a result of the relatively higher permeability

of the sinter bed in updraft sintering, approximately 20% less fan power is required than for downdraft sintering for the same sinter production rates.[3]

Another advantage that the updraft system exhibits over the downdraft system is the ability of the system to produce sinter of higher lead content.[3] As discussed previously, some molten lead forms during sintering. Elemental lead formations can be a major problem during downdraft sintering; consequently, the lead content in the mix for downdraft sintering is maintained below 45% to prevent significant formation of molten lead. In updraft sintering, the lead content of the mix is no longer a significant factor; therefore, sinter mixes of greater than 50% lead can be processed.[3, 4] The sulfur fuel percentage thus becomes the only major sinter mix parameter.

A further advantage of updraft sintering is the lower maintenance requirements of the sintering machine and associated equipment.[3] The metal pallets are exposed to heat for a much shorter period of time, thus resulting in less erosion and warpage. In addition, the fans and ducting systems are subjected to a less harsh environment than that in downdraft sintering. The end result is fewer maintenance shutdowns for the updraft sintering system.

Since the trend in the U.S. over the last decade has indicated a preference for updraft sintering, it is doubted that any new downdraft installations will be built in the domestic industry. Therefore, further considerations of the sintering process for pollution control herein will

concentrate on control of updraft installations. Table 3-10 gives feed and product characteristics from typical updraft sintering operations.

An inherent characteristic of the updraft sintering machine is the relative ease with which an effective air seal between the pallets and windboxes can be designed into the system. Because the reaction area can be effectively isolated from outside air infiltration, relatively high concentrations of SO_2 can be attained in the front parts of the machine. This concentration varies between 5 and 8 percent [4, 5] near the entrance of the machine, but decreases to approximately zero percent near the rear of the machine. However, when gas recirculation is used, a concentration of 6 percent can be attained in a single gas stream from the machine.[3] Figure 3-36 is a schematic of a typical sintering machine with gas recirculation.

With the gas recirculation technique, oxygen supplied to certain portions of the sinter bed area is contained in a gas stream which has taken part in a previous reaction. The recirculated gas stream is ducted from an area of relatively low reaction activity, thus low SO_2 concentration and high O_2 concentration, to the primary combustion area. Thus these gases have adequate oxygen to support additional combustion.

A plant not using weak gas recirculation normally uses approximately 75 percent of the machine length for roasting and sintering, and the remainder of the length as a cooling zone.[3] When sintering gases are recirculated, however, the gas stream entering the primary combustion zone will be at a higher temperature than during conventional operation.

Table 3-10 TYPICAL UPDRAFT SINTERING MACHINE FEED AND PRODUCT DATA.[6, 7, 8]

Plant	Concentrate		Sintering Machine Feed		Mix		Product	
	Lead %	Sulfur %	Lead %	Sulfur %	% New Concentrate	% returns	Lead %	Sulfur %
A	40-45	9-13	40-45	5-7	≈ 26	50	45-50	1-1.5
B	74	16.5	46	6	26	50	50	1.0
C	70-75	≈16	43	5	28	48	46	1.7

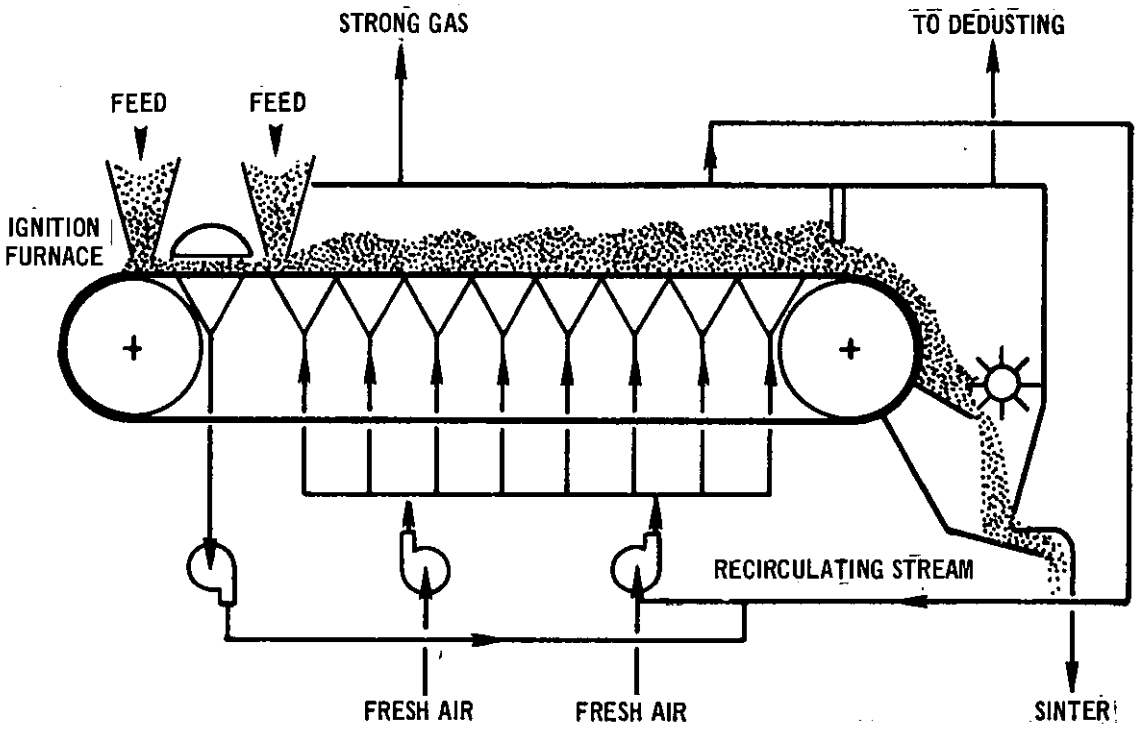

Figure 3-36. Updraft sintering with weak gas recirculation.

The cooling zone is not present in machines using gas recirculation, and even though the recirculated gases are taken from an area of relatively low reaction activity, they will still have a temperature of up to 400°C.[3] Due to the higher operating temperatures, more liquid-phase elemental lead is formed within the sinter bed, causing uneven permeability.[3] In addition, moisture variations can result in the sinter return circuit. The uneven permeability and moisture variation decrease the efficiency of the roasting process in a machine using gas recirculation over a similar machine without gas recirculation. It follows, therefore, that the use of gas recirculation will decrease the production capacity of an updraft sintering machine using gas recirculation over a similar machine without gas recirculation.[9]

The cooling zone of a conventional domestic sintering machine assists in the reduction of dust formation during sinter discharge from the machine and subsequent screening of the sinter, and also permits the handling of a relatively cool material. This is not the case, however, when using gas recirculation. The sinter is usually discharged from the machine in a relatively hot state, approximately 400° to 500°C; therefore, an increase in dust formation during discharge results. One method of reducing dust formation is to recirculate the gases and rely upon the filtering effect of the sinter bed to capture the entrained dusts. However, this would further decrease sintering efficiency through the decreased bed permeability caused by dust deposition. Another method is the ducting of gases from the sinter discharge area through a particulate collection device directly to the atmosphere. Since

reaction activity essentially has ceased in the discharge area, these gases contain little SO_2.

Although gas recirculation results in a decrease in sintering machine efficiency and capacity, the product sinter compares favorably with that from typical domestic lead sintering operations. The residual sulfur content of the sinter will average 1 to 1.5 percent.[3] This equates to the removal of approximately 85 percent of the sulfur during the sintering operation.

From an air pollution viewpoint, the special importance of gas recirculation lies in the fact that a single effluent stream is generated from the sintering process. This gas stream has sufficient SO_2 content to allow efficient SO_2 control by conventional strong SO_2 gas stream methods.[4]

Gas recirculation is being used in a number of foreign smelters both on sintering machines which produce lead sinter, and those which produce a combined lead and zinc sinter (Imperial Smelting Process). Both the Brunswick Smelting Company in New Brunswick, Canada, and the Mitsubishi-Cominco smelter in Japan, for example, utilize gas recirculation sintering machines.[10, 11] In each case a single strong stream of up to 6 percent SO_2 is produced.[10, 11]

Downdraft sintering is also compatible with the recirculation technique. The Hoboken lead and copper smelter in Belgium is producing lead sinter by downdraft sintering and weak gas recirculation.[12] The single effluent stream from this sintering operation of 5.5% SO_2[12] is conveyed to an acid plant for treatment. It is estimated that approximately 99% of the feed sulfur released as SO_2 during sintering is recovered by this system.[12] As previously discussed, however, limitations

of the downdraft system should limit its future attractiveness to the domestic industry.

Table 3-11 indicates that the parameters of the feed and product material are essentially the same irrespective of sinter machine operation with or without gas recirculation. It can thus be concluded that a sintering machine operating with weak gas recirculation does not significantly alter the operating procedures of a lead smelter. At the same time the overall advantages of the updraft machine are not lost due to gas recirculation.

Table 3-11 FEED AND PRODUCT COMPARISONS OF SINTER FROM MACHINE WITH AND WITHOUT WEAK GAS RECIRCULATION

		Sinter Feed				Product		Gas Concentration
Plant	Type Machine	% Conc.	% Recy.	% Inert	Ratio Recycle:Conc.	% Pb	% S	% SO_2
A	Updraft without recirculation	28	54	18	1.7:1	46	1.8	1-2
B	Updraft without recirculation	26	50	24	2:1	50	1.1	6.0 0.5
C	Updraft with recirculation	—	—	—	4.5:1*		1.5	6.0
D	Updraft with recirculation	26	52	22	2:1	50	1.5	6.0
E	Updraft without recirculation	≈25	50	25	2:1	45	1.8	6-8 0.1

* 32% sulfur in feed concentrate.

3.1.3.2 Lead Reduction

Summary--

Lead reduction in the domestic industry is carried out in a blast furnace. The feed material, sinter, will contain approximately 15% of the concentrate sulfur. Approximately one-half of the feed sulfur to the blast furnace or 7 percent of the concentrate sulfur will be emitted to the atmosphere as a weak SO_2 stream. The stream will have an SO_2 concentration of from 500 to 2500 ppm. The remaining sulfur (8 percent of the concentrate sulfur) is contained in the slag or matte from the furnace.

General Discussion--

Reduction in the domestic industry is carried out in a blast furnace. The furnace is basically a water-jacketed shaft furnace supported by a refractory base. Tuyeres through which combustion air is admitted under pressure are located near the bottom and evenly spaced on either side of the furnace (Figure 3-37).

The furnace is charged with a mixture of sinter and metallurgical coke. Other materials added include limestone, silica, litharge, and slag-forming materials. Coke makes up from 8-14% of the charge, and sinter makes up from 80 to 90 percent.[13] The remaining constituents are recycled and clean-up materials. The blast furnace takes the charge materials and reduces the sinter to lead bullion with most of the impurities being eliminated in the slag.

The principal reactions which take place in the blast furnace are:

$$PbO + CO + heat \rightarrow Pb + CO_2$$

$$C + O_2 \rightarrow CO_2 + heat$$

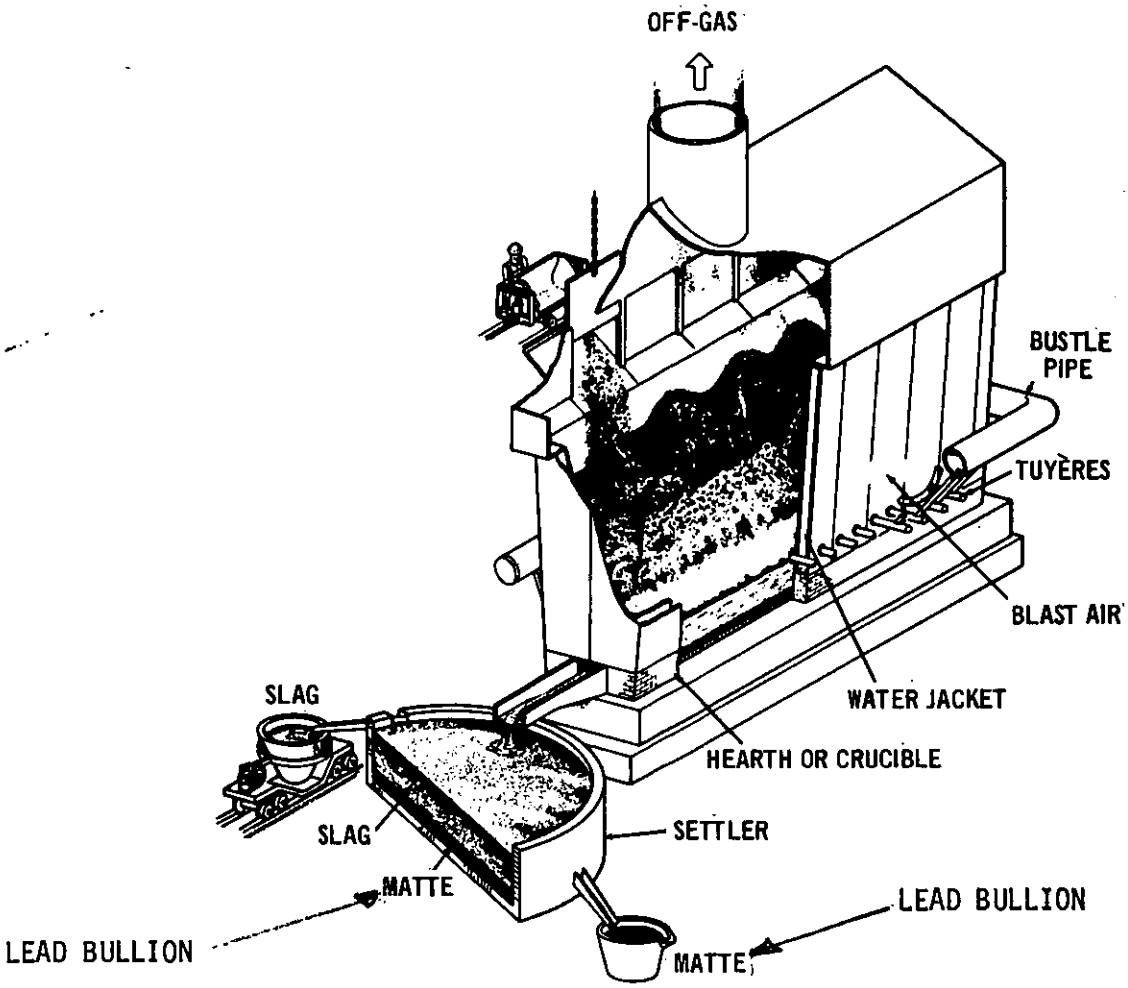

Figure 3-37. Lead blast furnace.[14]

$$C + CO_2 + heat \rightarrow 2CO.$$

The blast furnace products separate into as many as four layers, dependent upon the charge constituents and the processing circumstances. These include, from lightest to heaviest, slag (largely silicates), speiss (basically arsenic and antimony), matte (made up essentially of copper sulfide and other metal sulfides) and lead bullion. Normally, the collected slags at domestic smelters are made up of the first three layers and are collected continually from the blast furnace. The slag is either processed at the smelter for its metal content or shipped to slag treatment facilities.

Since the sintering process is not 100 percent efficient in the conversion of lead sulfide (PbS) to lead oxide (PbO), some lead sulfate ($PbSO_4$) and small amounts of lead sulfide remain in the product sinter. Therefore, within the blast furnace shaft there are additional leadforming reactions involving lead sulfides and sulfates. It is these reactions which generate SO_2 during blast furnace operations. The reactions are principally:[13]

$$2PbO + PbS \rightarrow 3Pb + SO_2$$

$$PbSO_4 + PbS \rightarrow 2Pb + 2SO_2$$

As a result, the effluent from a blast furnace normally contains SO_2 in concentrations ranging from a few hundred ppm to as much as 2500 ppm.[1]

However, not all sulfur in the sinter feed to the blast furnace is eliminated as SO_2. A major portion is contained in the slag.[15] This is dependent, however, upon the presence of copper and other impurities in the sinter. When copper or other impurities such as nickel are present in the sinter, part of the sulfur in the sinter becomes fixed with the copper

present and forms a matte. Thus, sulfur emissions as SO_2 from the blast furnace are dependent upon the amount of sulfur that becomes fixed with copper and other matte-forming impurities and that contained in slags.

Typical sulfur balances from domestic installations indicate that from 10 to 20% of the concentrate sulfur is eliminated in the blast furnace. Fully 50 percent of the furnace sulfur can be emitted as SO_2 with the remaining 50 percent contained in the furnace matte and slag. The overall sulfur eliminated from the blast furnace may seem high compared to the relatively low outlet SO_2 concentration experienced, but this is mainly due to the high volume of dilution air injected into the emission stream from the furnace. The dilution air serves two important purposes. First, it provides air to dilute the carbon monoxide in the discharged gas stream from the furnace shaft. If the carbon monoxide were not diluted, a potentially dangerous situation would arise due to the explosive nature of carbon monoxide.[1] Second, large volumes of air are also required to cool the exit gases from an estimated 750°C to approximately 140°C, which then allows baghouse treatment for particulate removal.[1]

3.1.3.3 Electric furnace smelting

Summary--

The electric smelting process for lead concentrates was developed by Boliden Lead Company of Sweden and is in commercial use at their Skelleftea, Sweden, installation. At present only concentrates of greater than 65% lead are processed. The smelting system consists of an electric furnace and a copper-type converter. Approximately 90% of the concentrate sulfur is removed as SO_2 and slag in the furnace and the remaining 10 percent is removed as SO_2 in the converter.

The concentration of SO_2 in the off-gases from the furnace averages 10% and these gases can be processed in conventional strong gas emission control systems. The intermittent gases generated during converter blowing, however, are presently emitted directly to the atmosphere through a tall stack (145 meters) at the Skelleftea smelter. Company personnel, however, indicate that it would be impossible to combine the converter off-gases with the furnace off-gases to produce a single strong off-gas stream, thus permitting control of both operations. Consequently, with further development the electric smelting furnace appears to present an alternative to conventional lead smelting processes.

General discussion--

The foreign-developed Boliden process is an electric furnace smelting process for lead concentrates. The process is basically one which relies upon electrical energy to provide the necessary heat to initiate and sustain the smelting reactions.

The Boliden furnace incorporates electrodes which are submerged in a molten bath of slag. The electrodes and slag form an electrical circuit through which a current is forced under high voltage. The

resistance to current flow by the slag layer provides the heat necessary to initiate the smelting reactions. Figure 3-38 is a schematic of the Boliden electric furnace.

The charge to the Boliden furnace is made up of concentrates, recycled dust and dross, fluxing materials, and coke which are injected into the furnace through the furnace roof as a finely dispersed suspension. The basic smelting reaction is:

$$PbS + O_2 \rightarrow Pb + SO_2$$

and to a small extent:

$$3PbS + 5O_2 \rightarrow 2PbO + PbSO_4 + 2SO_2$$

However, additional simultaneous reduction reactions within the slag layer occur amoung lead sulfate, lead oxide and carbon. They are:

$$2PbO + PbS \rightarrow 3Pb + SO_2$$

$$PbSO_4 + PbS \rightarrow 2Pb + 2SO_2$$

$$2PbO + C \rightarrow 2Pb + CO_2$$

The furnace is constructed to allow sufficient time for each concentrate particle to burn the bulk of its sulfur and simultaneously oxidize lead and zinc while in suspension. However, in the present process the concentrates are reacted with less than stoichiometric air, thus allowing a portion of the lead sulfide concentrates to settle directly into the lead bullion. By keeping the oxygen supply to the furnace artificially low, it is possible to maintain the lead content of the slag at about 3.5%, equivalent to a total lead loss of about 1.0%.[16] Even though total desulfurization is not achieved in the furnace, the exit gases from the waste heat boiler contain about 8.5% SO_2.[16]

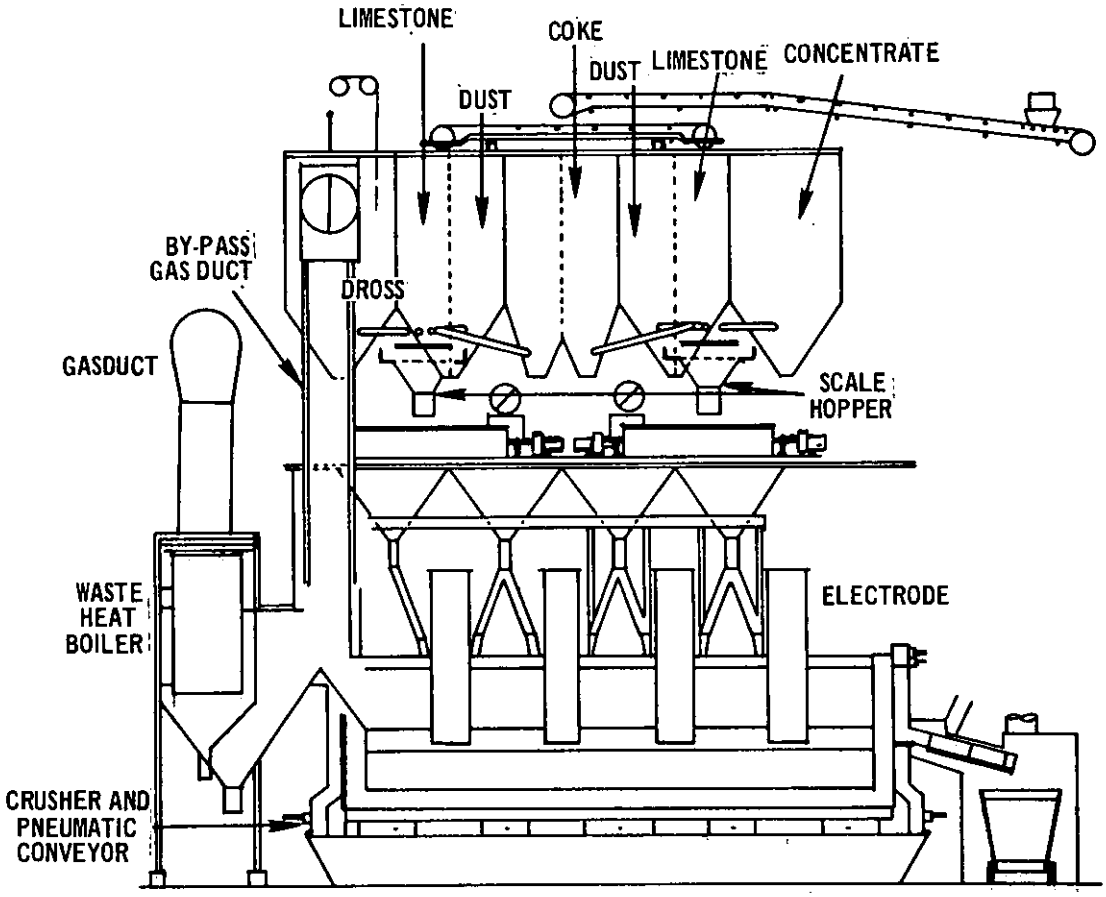

Figure 3-38. Boliden electric furnace[16]

The furnace bullion which is delivered to a converter averages 3% sulfur, or about 18 percent of the concentrate sulfur.[16] Therefore, a significant amount of sulfur remains in the furnace bullion and is available for conversion to SO_2 during converting. Approximately 55% of the converter sulfur is eliminated as SO_2 during converting.[16] Thus fully 10% of the concentrate sulfur is eliminated during the converting process. Figure 3-39 gives a sulfur balance of the electric furnace operation.

Present Boliden process operations indicate that about 40 minutes of blowing time for each 70 tons of bullion is required, which means a total blowing time of about three hours in each 24-hour period.[16] The exit SO_2 concentration at the converter mouth increases successively from zero up to as high as 17%, with an average of about 10% during the blowing.[17] Typical copper converter experience indicates that from 80% to 300% air infiltration into the converter off-gases can be expected due to the inability to completely seal off-gas collection hoods to the converter mouth.[18] Thus, the concentration of SO_2 in the converter off-gases collected could be reduced by a factor of 2-4 as a result of air infiltration.

Typical SO_2 control systems for strong gas streams, however, rely upon ambient air to dilute, cool and supply oxygen before processing. Gas streams of greater than 8 percent are normally diluted down to 4-7%. Thus by mixing the dilute converter gases with the hot, low-oxygen electric furnace gases, the natural infiltration of the converter system would be utilized to provide a relatively high oxygen content gas stream to dilute the furnace gases.

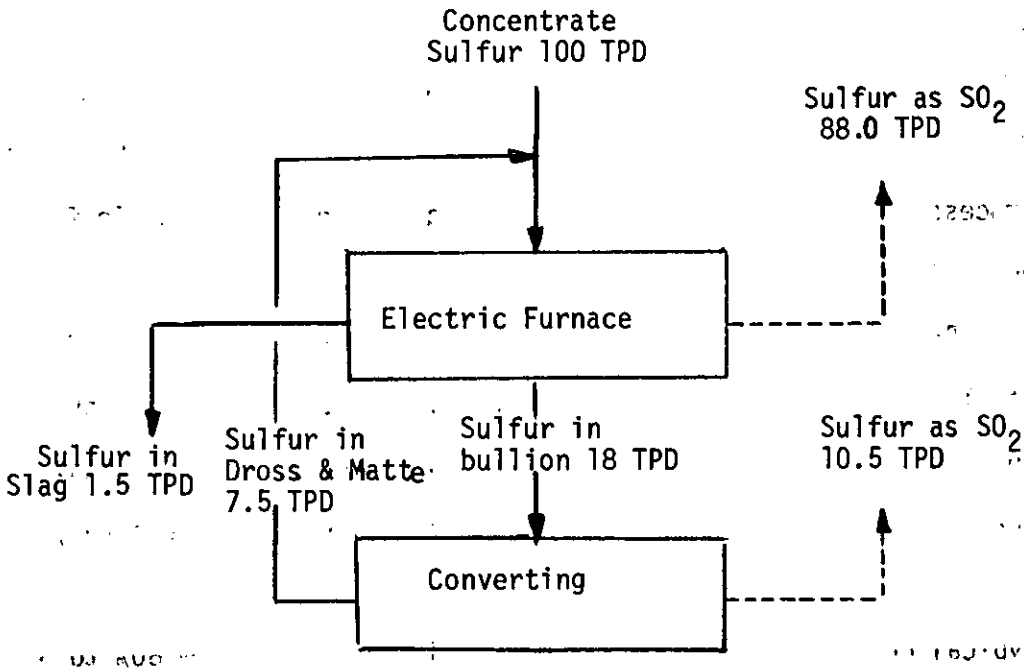

Figure 3-39. Sulfur balance in Boliden electric furnace.[16]

It is not possible to reduce the sulfur content of the bullion from the furnace and at the same time maintain a low lead content slag. By increasing the coke addition and minimizing the air inlet to the furnace, slag losses will be reduced but furnace lead will have a high sulfur content. On the other hand, with higher oxidizing conditions in the furnace, the furnace lead will be low in sulfur and the slag high in lead. Furthermore, electrode consumption will be accelerated with higher oxidizing conditions. In operating the furnace, therefore, a tradeoff among sulfur elimination, lead slag losses, and electrode consumption is required.[17]

Currently there is only one installation in the Western World using the electric lead smelting process. This installation processes exclusively rich lead concentrates at a feed rate of 235 metric tons per day.[16] To date, only concentrate mixtures of 65% to 75% lead are being processed in the furnace,[16] whereas most domestic smelters are processing concentrates of approximately 40-75% lead content.

At present the lead converter operation is not controlled; however, the control of the converter is possible. With control of the converter the electric furnace process presents an effective SO_2 control alternative.

REFERENCES FOR SECTION 3.1.3

1. Systems Study for Control of Emissions - Primary Nonferrous Smelting Industry; Author G. McKee & Co.; Western Knapp Engineering Division; PHS, U.S. Dept. HEW; Contract No. PHS 86-65-85; Vol. I, II, III, June (1969).

2. Internal EPA Letter Report to Mr. Jean Schueneman, Director , Control Programs Development Div., from Mr. G. Thompson entitled, "Reasonably Available Control Technology for Nonferrous Smelters," Jan. 18, 1973.

3. Wendeborn, H.B., M.O. Plucker, W. P. Massion, "Updraft Sintering of Lead concentrates," Journal of Metal, Nov. 1959, pp 748-751.

4. Gibson, F.W., "New Buick Lead Smelter Incorporates Forty Years of Technical Advances," Engineering and Mining Journal, July 1968, pp 62-67.

5. Emission Test Report - EPA Task No. 10, ETB No. 72-MM-13, "Emissions From a Primary Lead Smelter Sintering Machine Acid Plant of Missouri Lead Operating Company," Midwest Research Inst., EPA Contract No. 68-02-0228.

6. Beilstein, D.H., "The Herculaneum Lead Smelter of St. Joe Minerals Corporation, Herculaneum, Missouri," AIME World Symposium on Mining and Metallurgy of Lead and Zinc, Vol. II, 1970, pp 702-737.

7. Gibson, F.W., "The Buick Smelters of AMAX-HOME-STAKE Lead Tollers," AIME World Symposium on Mining and Metallurgy of Lead and Zinc, Vol. II, 1970, pp 738-776.

8. Paul, R.B., "The Glover Lead Smelter and Refinery of the American Smelting and Refining Company, Glover, Missouri," AIME World Symposium on Mining and Metallurgy of Lead and Zinc, Vol. II, 1970, pp 777-789.

9. Green, A.D.M. and B.S. Andrews, "Sintering Developments - Cockel Creek," Australian Institute of Mining and Metallurgy, 1963.

10. Private communication letter dated Nov. 27, 1972, from Brunswick Mining and Smelting Corporation.

11. Suganuima, T., R. Melenka, "The Mitsubishi - Cominco Lead Smelter," AIME World Symposium on Mining and Metallurgy of Lead and Zinc, Vol. II, 1970, pp 853-866.

12. Leroy, J.L., J.P. Lenoir, L.E. Escoyez, "Lead Smelter Operation at N.V. Metallurgic Hoboken S.A.," AIME World Symposium on Mining and Metallurgy of Lead and Zinc, Vol. II, AIME 1970, pp 824-862.

13. Kirk-Othmer Encyclopedia of Chemical Technology, Vol. 12, Second Ed. "Lead," pp 207-247, John Wiley and Sons, Inc., N.Y., 1967.

14. Boldt, J.R., "The Winning of Nickel," The International Nickel Co. of Canada, Ltd., Longman's Canada, Ltd., Toronto, Canada, 1967.

15. Private communication, St. Joe Minerials Corp. and EPA, letter dated Dec. 20, 1972.

16. Elvander, Hans I., "The Boliden Lead Process," Anderson and Queneau, Pyrometallurgical Processes in Nonferrous Metallurgy, Gordon and Breach, New York, 1967, pp 225-245.

17. Private communication written in intra-office memo of conversation between Mr. B. Rudling of the Boliden Lead Co., Skeleftea, Sweden, and EPA, Mr. C. Darvin, dated June 6, 1973.

18. Yannopoulos, J.C., "Optimization of the Converting Operation in a Smelter Producing Copper and Sulfur Acid," Paper presented at MMIJ-AIME Joint Meeting, Tokyo, Japan, May 24-27, 1972.

General References

19. Emission Test Report, EPA Task No. 72-MM-14, Emissions From a Primary Lead Smelter Blast Furnace at American Smelting and Refining Company, Glover, Missouri. MRI, EPA contract No. 68-02-0228.

20. Trip Report, "Trip to European Smelters," Aug. 25 - Sept. 8, 1972, Mr. C. Darvin.

21. Reid, W.S., "Concentration of the SO_2 content of Dwight - Lloyd Sintering Machine Gas by Recirculation," Metals Transactions, April 1949, pp 261-266.

22. Petraitis, P. and A.D.M. Green, "Updraft Sintering at Cockel Creek," Australian Institute of Mining and Metallurgy, 1963.

3.1.4 Combined Lead and Zinc Smelting. The Imperial Smelting Process.

Summary--

The Imperial Smelting Furnace (ISF) process has proven to be capable of treating a wide range of materials, including some which are unattractive to present domestic lead and zinc smelting operations.

From an air pollution viewpoint, the most attractive aspect of the ISF process is the possible absence of gaseous sulfur emissions from the smelting furnace. Informal discussions with Imperial Smelting officials and literature reviews seem to indicate that the furnace is an extremely small source of SO_2 at best and is comparable to the conventional blast furnace at worst.

General discussion--

The Imperial Smelting Process, developed by Imperial Smelting Corp. Ltd. of England, was originally designed for the production of zinc from bulk lead-zinc concentrates. This technology was then extended to the treatment of high-grade lead concentrates simultaneously within the furnace. Further development has also extended the flexibility of the process to the treatment of most lead and zinc primary and secondary materials.[1] Currently, the Imperial Smelting Furnace (ISF) process produces 11 percent of the world primary zinc production and 10 percent of the world primary lead production.[2]

In many respects an ISF plant is similar to most domestic lead smelters. The typical ISF facility consists of the following sections:

1. The charge preparation and mixing section which includes the sintering operation and the coke preheating operation.
2. The Imperial smelting furnace in which the reduction of lead and zinc is accomplished.
3. The condenser and separation systems for condensation of zinc vapors.

Concentrates are first desulfurized and agglomerated by the sinter-roasting process on updraft sintering machines. During the sintering operation, the sulfide materials are oxidized to produce metal oxide and sulfur dioxide. The sulfur dioxide is usually produced at concentrations of about 6 percent. The basic process flow chart for typical ISF installations is shown in Figure 3-40. The two potential SO_2 emission sources, as in typical lead smelters, are the sintering machine and the Imperial smelting furnace, which corresponds to a blast furnace in the conventional lead facility. However, process data indicate that emissions of sulfur dioxide from the Imperial smelting furnace are less than emissions from the conventional lead blast furnace. The lead bullion produced by the ISF process is approximately equivalent to that produced at a conventional domestic lead smelter.

For the ISF process a high-quality sinter is one of less than 1% sulfur with a good porous structure.[3] Sinter quality is usually based on the sulfur content and the rattle index (Section 3.1.3.2). Thus, a sinter of less than 1% residual sulfur and a rattle index of 75 or greater is considered satisfactory sinter for use in the ISF process.[4]

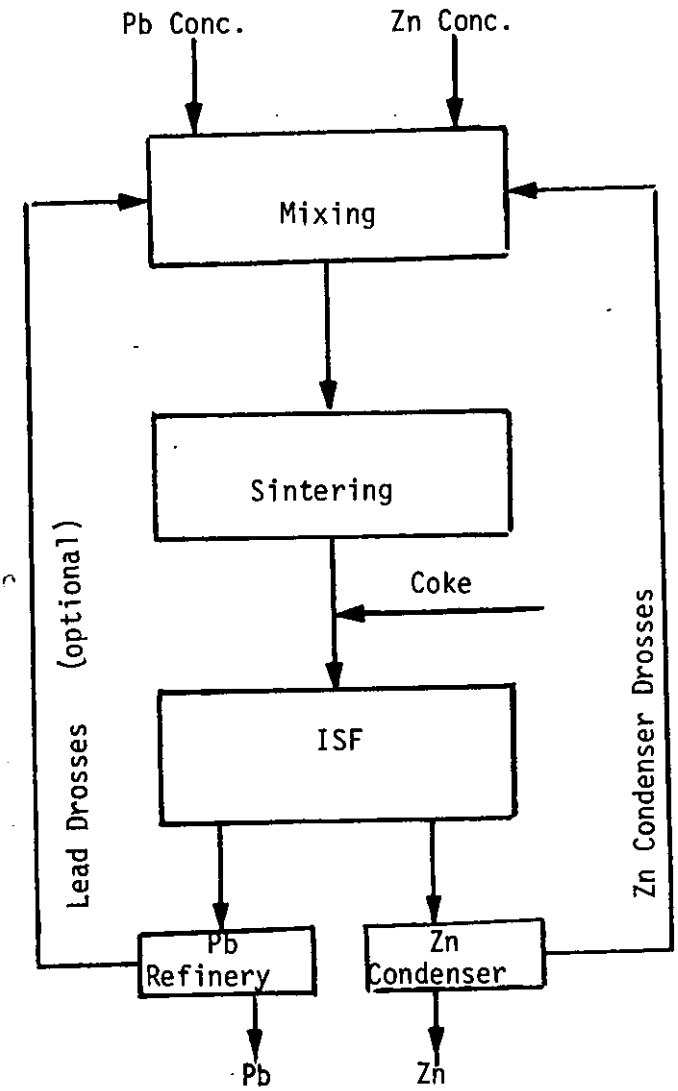

Figure 3-40. ISF smelting process.

To produce a sinter of the required quality, the updraft sintering machine has been universally adopted by ISF facilities. The advantages of the updraft system in producing strong gas streams and high-quality sinter need not be discussed in this section since these have been discussed in Section 3.1.3.1. However, it is appropriate to indicate that gas recirculation is used in most sintering machines at ISF installations, and this results in sintering machine off-gases of 6% to 7% SO_2.[5,6]

In the sintering process, feed consists basically of mixed concentrates and recycled materials bonded together by water. Table 3-12 gives a typical raw material analysis. The lead content in the sinter feed is controlled to approximately 20 percent, which maintains conditions for the production of a low-sulfur sinter. Table 3-13 gives typical product sinter analysis.

The Imperial smelting furnace in many respects resembles the conventional lead blast furnace, but there are important differences. The ISF is a closed-top unit using hot preheated metallurgical coke and a hot air blast. The lower part of the furnace is similar to that of a lead blast furnace except that the tuyeres project inside the line of the water jackets. The bullion and slag are tapped periodically from the bottom of the furnace. Slag overflows into launders. Figure 3-41 is a diagram of the ISF.

Since zinc is extracted at above its boiling point, the zinc-laden gases rise to the top of the furnace and are ducted via two ducts to condensers. The gases at this point contain between 8-12% CO_2, 5-7% Zn, 18-25% CO, and the remainder N_2.[6,7,8] It is important

Table 3-12. TYPICAL ISF PROCESS MATERIALS ANALYSIS[1]

Material %	Zn	Pb	S	Cu	Cd	As	Fe	Sn	Bi	SiO_2	CaO	MgO	Al_2O_3	Ag g/t
Zinc Concentrates	41-58	0.05-4	29-33	0.4-6	0.2	0.2	0.5-12	Tr	Tr	1-6	0.15-2.5	0.05 0.4	0.2	16-28
Lead Concentrates	3-9	49-77	15-23	1-4.5	0.01-0.04	0.05-1	Tr-13	Tr	0.1	Tr-1	Tr-0.4	Tr	0.2	720-2710
Mixed Bulk Sulfide Concentrates	10-28	6-49	23-36	2 7	0.1-0.3	0.2-1	4.5-33	Tr	Tr-13	2-4.5	0.3-1.5	Tr-0.2	0.2-1	2100-2900
Zinc Oxide Ores	62	5	3	0.08	0.01		1	-	-	2.3	0.15	-	1	-
Mixed Oxide Ores	36	26	6	0.9	0.3	0.01	6.5	-	-	0.09	Tr	0.1	0.1	-
Electrolytic Zinc Residues	21	5	4	0.8	0.2	0.1	30	0.01	-	6.0	0.6	0.3	2.0	370
Drosses	74	0.5	2	-	-	-	0.1	-	-	0.1	0.1	-	-	-

Tr - Trace

Table 3-13. TYPICAL ISF SINTER ANALYSIS[1]

Plant	Zn	Pb	Cu	Cd	FeO	CaO	SiO_2	S(total)
A. Avonmouth	43	21	0.5	0.1	9	5.5	3.5	1
B. Cockle Creek	46	20	0.3	0.1	10	4	2.5	0.6
C. Duisburg	46	18.5	0.7	0.03	10	4	3	0.7
D. Hachinohe	44.5	20	1.1	0.1	10.5	4	3	0.7
E. Noyelles-Godault	46.0	17.5	0.5	0.06	11.0	4.5	3.5	0.9

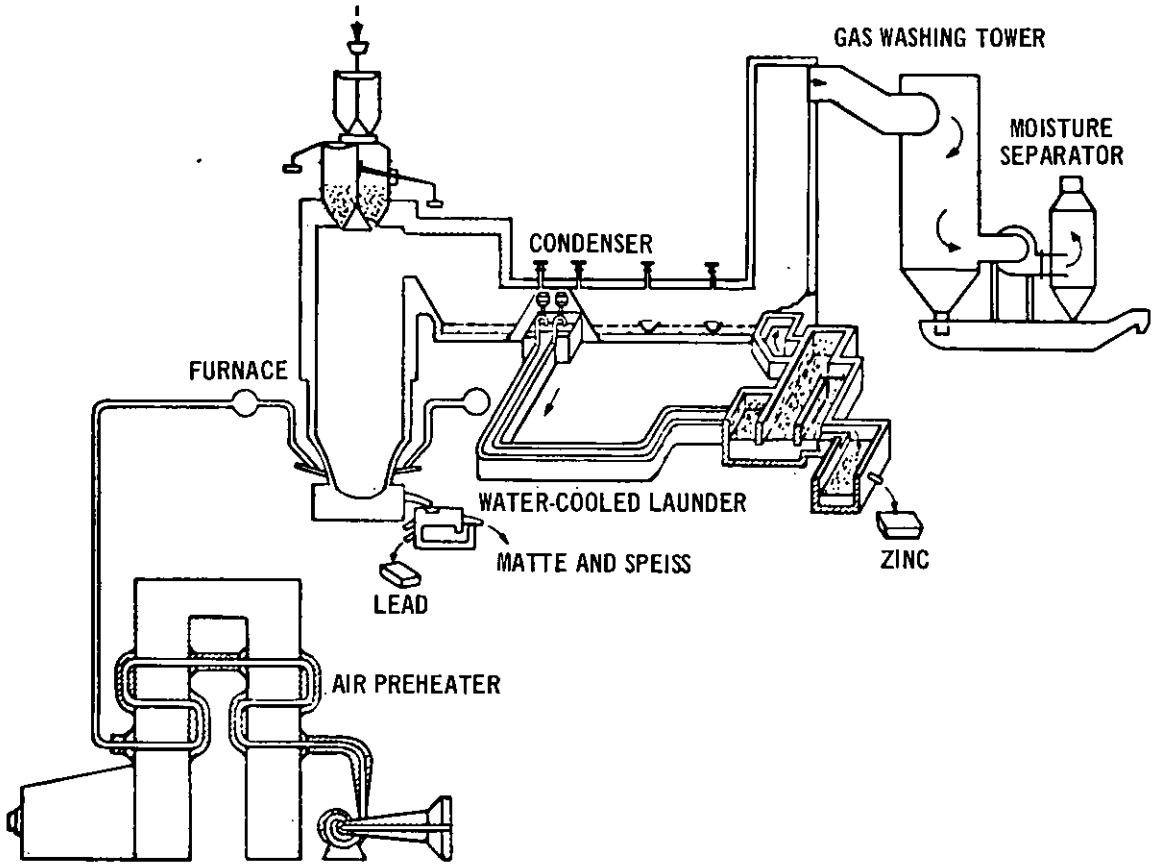

Figure 3-41. The Imperial smelting furnace.[9]

to note the apparent absence of any gaseous sulfur compounds.

The condensers are brick-lined chambers which contain a pool of lead. The lead is showered over the cross-sectional area of the chamber, promoting intimate contact with the zinc-containing gases passing through the chamber. Before leaving the condenser, the gases are shock-cooled by the lead from a temperature of 1000°C to a temperature of 550°C.[7,10] Outside the condenser, the lead bath becomes supersaturated with zinc by decreasing its temperature to about 450°C.[7] The molten zinc separates and floats to the top of the liquid lead. The liquid zinc overflows into a holding bath where it is tapped off periodically. The resulting zinc product is prime western-grade zinc.

The gases from the ISF are stripped in the condensers of over 95% of the entrained zinc. Zinc or lead remaining in the gas stream is in the form of dust and is removed by high-efficiency particulate capturing systems.

Compared to the conventional lead blast furnace, the ISF furnace does not appear to be a major source of SO_2 emissions. Most sulfur is introduced into the furnace via the sinter charge materials and coke. As indicated, the charge sinter typically contains 1 percent or less sulfur. Coke typically contains less than 0.7% sulfur.[11] Table 3-14 gives a sulfur balance at a recent ISF operation campaign. Note the unaccountable sulfur loss of 0.7 tons/day of the input sulfur to the ISF. Assuming that the unaccountable sulfur is converted to SO_2, this amount will equal approximately 10 percent of the input sulfur to the Imperial smelting furnace compared to a sulfur elimination as SO_2 of approximately 50% of the input sulfur to a conventional blast furnace.

Table 3-14. SULFUR BALANCE OF ISF INSTALLATION[12]

Input	Dry M Tons/Day	% Sulfur (S)	Sulfur M Tons/Day	Total % Sulfur
Sinter	770	0.6	4.5	65
Coke	297	0.8	2.4	35
			6.9	100
Output				
Slag	187	2.6	4.8	70
P.S. Dross	31	1.8	0.6	9
Blue Powder	43	1.9	0.8	11
Unaccounted*			0.7*	10
			6.9	100

*Potential SO_2 emissions.

Based on preliminary data, the ISF process does seem to offer an advantage in increased control of input sulfur to the pyrometallurgical lead and zinc smelting process. All sulfurous gases from the sintering operation can be controlled, and most of the sulfur remaining in the sinter charged to the smelting furnace appears to be captured by the furnace slag and not emitted to the atmosphere.

REFERENCES FOR SECTION 3.1.4

1. Evans, C.J.G., P.M.J. Gray , "Influence of Raw Material Composition on the Zinc-Lead Blast Furnace," from Advances in Extractive Metallurgy and Refining, The Institute of Mining and Metallurgy, London, Oct. 1971, paper #1.

2. Imperial Smelting Process Limited ISF Operations and Technology, An Appraisal of the Process Position, A Brochure from Imperial Smelting Process Limited, Oct. 1972.

3. Argall, G.O., Jr., "Imperial Zinc-Lead Blast Furnace Now Smelter Variety of Mixed Charges," World Mining, Aug. 1966, p. 30-35.

4. Harris, C.F., J.L. Bryson, K.M. Sarkar, "Effect of Compositional Variations on the Quality of Zinc-Lead Sinter," Extract for Transactions/Section C of the Institute of Mining and Metallurgy, Vol. 76, 1967.

5. Broad, A.V., and D.A. Shutt, "Sintering Practice at the Avonmouth Works of Imperial Smelting Coproration Limited," Sintering Symposium, Australian Institute of Mining and Metallurgy, 1958, p. 219-259.

6. Bonnemaison, Jean Michel Defonte, "Imperial Smelting Furnace of Penarroya," Royelles-Codault, France, AIME World Symposium on Mining and Metallurgy of Lead and Zinc, AIME 1970, p. 619-648.

7. Fujimori, M., Dr.,"The Imperial Smelting Process for the Simultaneous Production of Zinc and Lead at the Harima Works of Sumiko," United Nations Industrial Development Organization Expert Group Meeting on Lead and Zinc Production, London, 28th April, 2nd. May, 1969.

8. Oprea, F., S. Vacu, and D. Taloi, "Behavior of Compounds of Zinc and Other Metals in the Reduction Process in the I.S.P. Furnace," Freiberger Forschungshefte 1969 B150, pp. 89-96.

9. Temple, Dr. D.A., "Is the U.S. the Next Target for an ISP Plant?" Engineering and Mining Journal, January 1967.

10. Morgan, S.W.K., "The Production of Zinc in a Blast Furnace," Transactions of the Insitute of Mining and Metallurgy, Vol. 66, Part II, 1956-57.

11. Final Technological Report on a System Analysis Study of the Integrated Iron and Steel Industry, Contract No. PH 22-68-65, May 15, 1964, Battelle Memorial Institute, Columbus, Ohio, pp. V-50 to V-52.

12. Private communication: Ltr. dated 26 June 1973, from Mr. D.A. Temple, Imperial Smelting Processes Ltd., to Mr. C. Darvin, EPA.

General References

13. Morgan, S.W.K., D.A. Temple, "The Place of the Imperial Smelting Process in Nonferrous Metallurgy," Journal of Metals, August 1967, pp. 23-29.

14. Azakami, T. and A. Yazawa, "Thermodynamic Considerations of Zinc Blast Furnace Smelting," Anadian Metallurgical Quarterly, Vol. 8, No. 4, pp. 313-317.

15. Gray, P.M.J. and S.E. Woods,"Production Capacity of the Imperial Smelting Furnace,"Ninth Commonwealth Mining and Metallurgical Congress 1969, Mineral Processing and Extractive Metallurgy Section, Paper #9.

16. Woods, S.E. and C.F. Harris, "Heat Transfer In Sinter Roasting," Symposium on Chem Engrs. in the Metallurgical Industries (1963 Instn. Chem. Engrs.).

17. Private communication, telegram dated 6/13/73 from Imperial Smelting Corporation, Ltd.

18. Petraitis, P. and A.D.M. Green, "Updraft Sintering - Cockle Creek," Australian Institute of Mining and Metallurgy, 1963.

19. Green, A.D.M., "Sintering Developments - Cockle Creek," Australian Institute of Mining and Metallurgy, May 27, 1963.

3.2 HYDROMETALLURGICAL PROCESSES

Concerning the treatment of copper, lead and zinc ores, hydrometallurgical processes have been applied commercially only to oxide ores or to ores consisting predominantly of oxides with some sulfides present. To date, however, no hydrometallurgical process has been successfully commercialized for the treatment of copper, lead or zinc sulfide ores, although many processes are currently under development. In light of this absence of commercialized hydrometallurgical technology for the treatment of copper, lead or zinc sulfide ores, the intent of the following discussions will be merely to give a perspective of the range of applicability of hydrometallurgy, to highlight present work in this area, and to review recent developments.

3.2.1 Summary

Hydrometallurgical processes have many apparent advantages over pyrometallurgical processes for the production of copper, lead and zinc. Hydrometallurgical processes typically show a very high extraction of the desired metal and are somewhat better suited to the treatment of low-grade ores than pyrometallurgical processes. Hydrometallurgical processes also are well suited to starting on a small scale and expanding as necessary, whereas pyrometallurgical processes usually must be designed as a large-scale operation. Finally, hydrometallurgical processes do not present the potential air pollution problems that pyrometallurgical processes do, since the sulfide sulfur contained in the ore or ore concentrate is not released to the atmosphere as sulfur oxides.

However, hydrometallurgical processes presently are not suitable or entirely satisfactory for producing copper, lead or zinc from their ores in all cases. The dissolution of minute quantities of impurities in the leach solution may severely impair the purity of the recovered metal, thus requiring further repurification. Also, in most cases, leach solutions which exhibit high extraction of copper, lead, or zinc exhibit low extraction of precious metals such as gold and silver. Thus, economics may dictate the use of a pyrometallurgical process rather than a hydrometallurgical process for the treatment of ores containing precious metals values high enough to warrant recovery.

Hydrometallurgical processes involve the leaching of desired minerals from an ore, ore concentrate or other metallurgical product into solution. This is followed by purification of the leach solution to remove suspended insoluble material, or in some cases to remove gross impurities dissolved in the solution. The purified leach solution is then treated to recover the desired metal from solution. Many techniques can be used, but the most common consist of: "cementation" or displacement of the desired metal ions in solution by metal ions of higher oxidation potential in the electromotive series; reduction of the metal ions in solution by hydrogen gas; ion exchange with an ion-exchange media exhibiting a high selectivity toward forming a chemical complex with the desired metal ions in solution; and direct electrolysis (electrowinning) of the solution to recover the desired metal.

3.2.2 Copper Extraction

Although no hydrometallurgical process for direct application to copper sulfide concentrates has as yet been commercially demonstrated, both the Federal Government, through the Bureau of Mines, and a number of companies presently have research/development programs underway, with the goal of developing such a process. In the United States, Anaconda, Duval Copper and Cyprus Mines, and in Canada, Cominco and Sherritt-Gordon Mines are actively developing hydrometallurgical processes applicable to copper sulfide concentrates. However, to date limited technical information has been forthcoming in most cases from these various programs and, thus, little is known concerning their status. Exceptions in this area are the Anaconda process and the Cyprus Mines process about which some information has recently been published in the technical literature.

Anaconda, Duval Copper and Cyprus Mines are each developing separate hydrometallurgical processes. Cominco and Sherritt-Gordon Mines, however, have signed a joint agreement for the development of a hydrometallurgical process. Although little information has been released by either Cominco or Sherritt-Gordon, initial indications are that the process is similar in some respects to that developed by Sherritt-Gordon in the early 1950's for nickel sulfide concentrates. This process was commercialized in 1954 by Sherritt-Gordon with the construction of their Fort Saskatchewan operations to recover nickel from nickel sulfide concentrates.[1]

The process in use by Sherritt-Gordon at Fort Saskatchewan utilizes an ammonia leach solution to extract nickel from ore concentrates. However,

it appears that the process under development for copper sulfide concentrates utilizes a sulfuric acid leach solution to extract copper from ore concentrates. The leaching operation is a pressure leach in the presence of air or oxygen and is carried out in an autoclave. As the desired metals go into solution as copper sulfate, the sulfide sulfur is reduced to elemental sulfur which precipitates from solution. The copper can then be recovered from the leach solution by electrolysis (electrowinning) or by hydrogen reduction. In either case, the sulfuric acid leach solution is regenerated simultaneously as the metal ions are removed from the solution.[1,2] To date, no information has been released which identifies the degree of extraction of precious metals by the leach solution; however, Cominco and Sherritt-Gordon have indicated that the overall process utilizes a separate metals recovery scheme to recover precious metals such as gold and silver.[3]

It would appear that Cominco and Sherritt-Gordon are progressing rapidly with the development of their process, as evidenced by the November 1972 announcement that a $10 million pilot plant will be built at Fort Saskatchewan in Alberta. The pilot plant is scheduled to start up in late 1974 and will serve to demonstrate the technical and economic feasibility of the process.[3]

It appears from information published in the technical literature that Duval Copper and Cyprus Mines are proceeding along somewhat the same lines toward developing a hydrometallurgical process applicable to copper sulfide ores.[4,5] The Cymet process, under development by Cyprus Mines, seems to be making substantial progress toward successful commercialization. A demonstration pilot plant of 25 tons/day capacity (ore concentrates capacity) is scheduled for startup by mid-1974.[6]

The Clear process under development by Duval Copper, however, was thoroughly tested in a pilot plant operated by Duval during 1971 and 1972, and in July 1973 Duval announced plans to construct a hydrometallurgical plant to process copper sulfide concentrates. The plant will be located at Duval's Esperanza mine just outside of Tucson, Arizona, and will have the capacity to produce 32,500 tons per year of copper. The installation is scheduled to start up in early 1975.[7]

Although Duval Copper appears to be progressing rapidly toward the commercial demonstration of a viable hydrometallurgical process for copper sulfide concentrates, to date little information has been released by Duval Copper which describes the process. Indications, however, are that the process is based on the use of a ferric-chloride leach solution. In this respect, it is similar to the Cyprus Mines Cymet process. A simplified process flow schematic of the Cymet process is shown in Figure 3-42.

Copper concentrates are first contacted countercurrently with a ferric chloride leach solution. The following reaction occurs,

$$6FeCl_3 + 2CuFeS \rightarrow 2CuCl + 2S + 8FeCl_2$$

extracting copper into solution as copper chloride. Simultaneously, the iron is extracted into solution as ferrous chloride and the sulfide sulfur reduced to elemental sulfur. The elemental sulfur precipitates from solution and is separated from the leach solution with the insoluble residue remaining following the leach. The sulfur is recovered

Figure 3-42. Cymet hydrometallurgical process.[5]

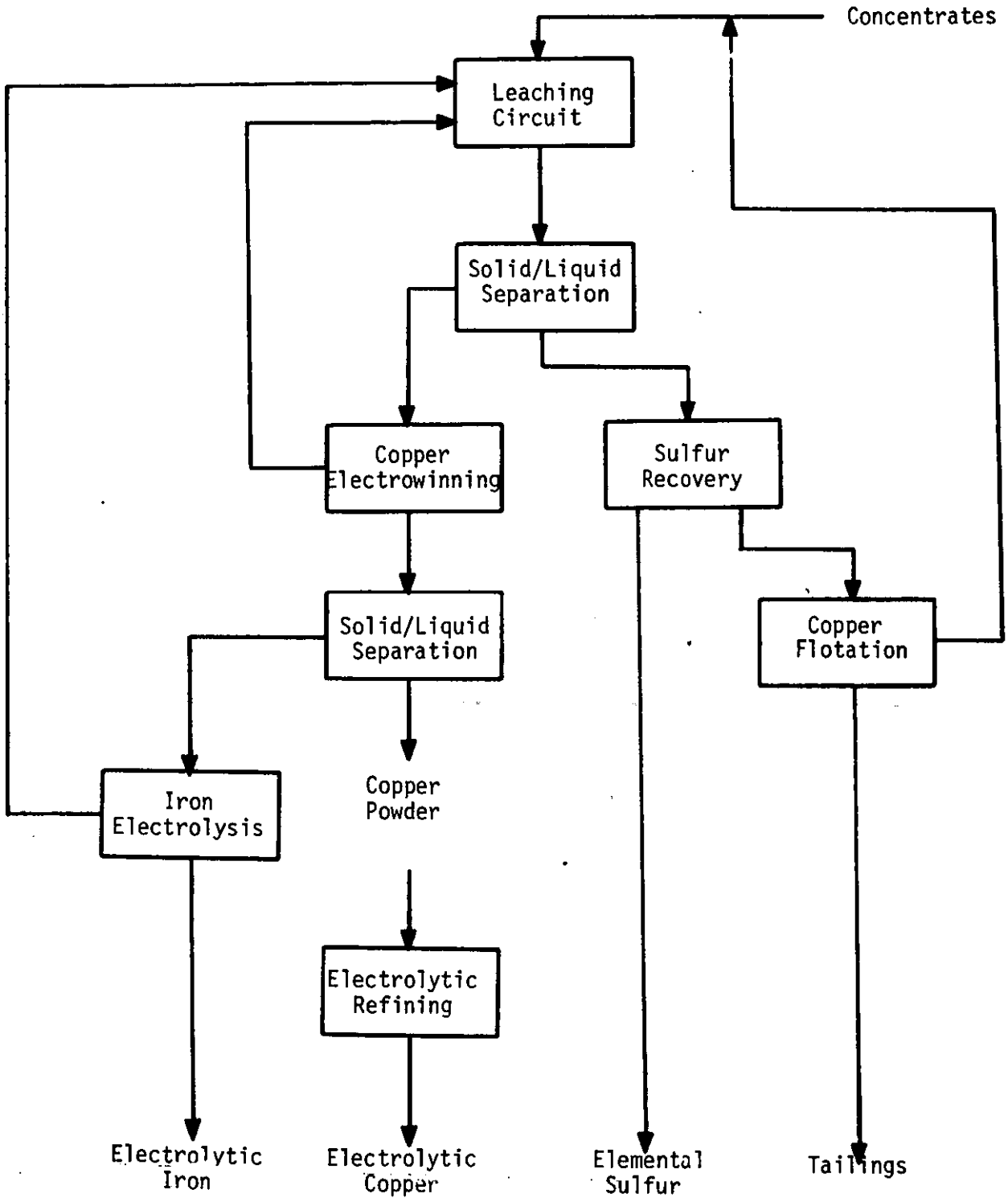

and the insoluble residue processed through a copper flotation unit to recover a copper sulfide ore concentrate which is recycled to the leaching circuit. The tailings from the flotation unit are discarded.[5, 8]

The leach solution containing the copper chloride is then treated in a diaphragm-type electrolytic cell. The solution is introduced into the anode compartment of the cell and the copper ions migrate through the diaphragm to the cathode, where they are reduced to free metal and precipitate from solution. Leach solution from the anode compartment is withdrawn from the cell and recycled to the leaching circuit. The copper is removed from the cathode compartment as a slurry and is recovered as a copper powder by filtration. The copper powder is melted, cast into anodes and electrolytically refined to meet various impurity specifications.[5, 8]

The spent leach solution remaining from the slurry is introduced into an electrolytic cell, also of the diaphragm type, for removal of iron extracted into the leach solution from the concentrate and for regeneration of the leach solution. In the cathode compartment, iron ions are reduced to free iron metal and electroplate from solution. Chlorine ions migrate from the cathode to the anode compartment and react with ferrous ions, converting them to ferric ions, thus regenerating the ferric chloride leach solution which is recycled to the leach circuit.[5, 8]

A major advantage of the Cymet process over most other hydrometallurgical processes is that some degree of precious metals

recovery is claimed. Specifically, recoveries of 97% of the silver and 60% of the gold contained in typical concentrates tested have been achieved.[5] The gold and silver are leached from the concentrates into solution and recovered with the copper powder. During electrolytic refining of the copper, the gold and silver deposit in the slimes, as in current electrolytic refining practice, and are recovered by conventional means.

Anaconda's Arbiter process appears to be about as close to commercial demonstration and success as Duval Copper's Clear process mentioned earlier. Anaconda has announced the construction of a 400-ton/day capacity (ore concentrates capacity) installation at the company's Montana smelter, scheduled for completion by mid-1974. Thus, the installation should be in startup during late 1974.[9] Anaconda has also indicated that this capacity is the optimum commercial capacity for the process and that additional capacity at an installation using the Arbiter process would be added by the construction of additional units of the same size. A simplified process flow schematic of the Arbiter process is presented in Figure 3-43.

Copper sulfide concentrates are contacted with an ammonia leach solution in the presence of oxygen. Although the leaching vessels are covered, this is not a pressure leach and the leaching takes place at moderate temperatures and pressures. The following reaction occurs,

$$4CuFeS + 8NH_3 + 11O_2 \rightarrow 4Cu(NH_3)_2SO_4 + 2Fe_2O_3$$

Figure 3-43. Arbiter hydrometallurgical process.[9]

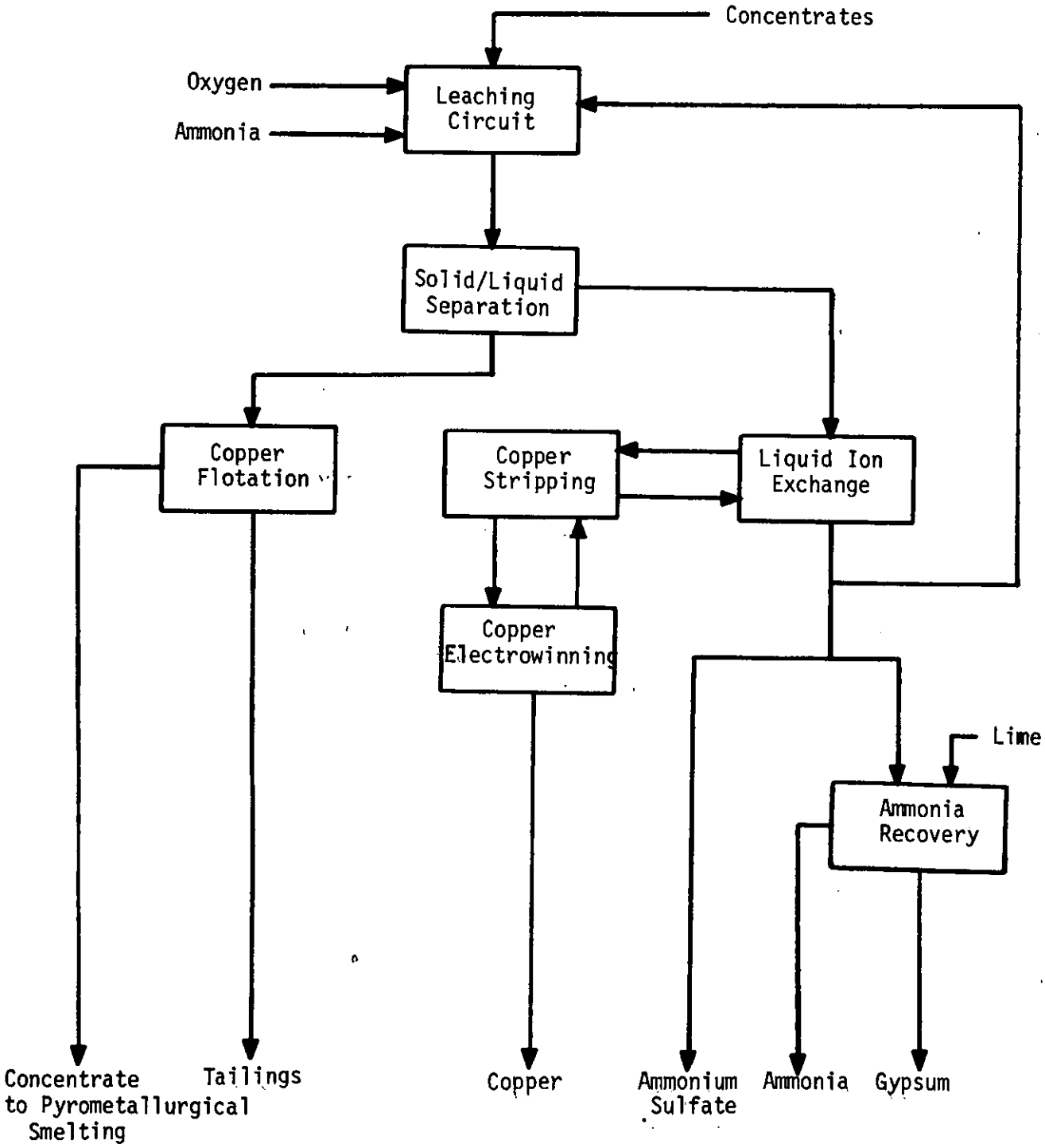

extracting the copper into solution as a copper ammine sulfate. Simultaneously, the iron is extracted into solution as ferric oxide. However, ferric oxide rapidly hydrolyzes to ferric hydroxide, which is insoluble and, as a consequence, precipitates from solution. The leach solution, rich in copper, is then contacted countercurrently with a LIX reagent (General Mills marketing tradename for a series of liquid ion exchange reagents) dissolved in a kerosene carrier. The LIX reagent has a very high affinity for the copper ions and a low affinity for other ions; thus the copper ions are selectively removed from the ammonia leaching solution. As the copper ions are removed, the copper ammine sulfate forms ammonium sulfate.[2, 8, 9, 10, 11]

The kerosene/LIX solution, rich in copper, is then contacted countercurrently with spent electrolyte solution from the copper electrowinning tankhouse. The copper is stripped from the kerosene/LIX solution into the electrolyte solution, and the kerosene/LIX solution is recirculated to the liquid ion exchange circuit. The electrolyte solution, containing the copper as copper sulfate, then passes to electrowinning cells for the recovery of copper. The copper is electroplated from solution forming copper cathodes, as in conventional electrolytic refining. As the electrolyte is depleted of copper ions, it is recirculated to the copper stripping circuit.[2, 8, 9, 10, 11]

Following the separation of the precipitated ferric hydroxide and copper concentrate residue from the ammonia leach solution, this residue is processed in a copper flotation unit to recover a copper sulfide concentrate.

Although pilot-plant results show that copper recoveries of 97-99% are possible, Anaconda indicates that with concentrates containing significant levels of precious metals, economics dictates that the process be operated at lower copper recoveries. A copper concentrate is then recovered from the residue remaining following the leach, which contains most of the residual copper and precious metals values. This concentrate is then processed by conventional pyrometallurgical means to recover copper and precious metals.[8, 9]

Unlike the Cymet process under development by Cyprus Mines, which reduces the sulfide sulfur contained in the ore concentrates to elemental sulfur, Anaconda's Arbiter process oxidizes the sulfide sulfur to sulfate. Thus, following the liquid ion exchange step, a portion of the spent leach solution must be withdrawn from the process to remove the sulfate as ammonium sulfate. Although spent leach solution is recirculated to the leaching circuit, fresh ammonia must be added to leach copper from the ore concentrates. The ammonium sulfate solution withdrawn can be utilized to produce ammonium sulfate fertilizer or ammonia can be recovered for recycle to the leach circuit. To recover ammonia, lime is added to the solution. Calcium displaces the ammonia and combines with the sulfate to form calcium sulfate, which is insoluble and precipitates from solution as gypsum. The ammonia is then recovered by heating the solution or steam stripping.[8, 9]

Although neither the Cymet process nor the Arbiter process poses the potential air pollution problems presented by conventional pyrometallurgical processes, this does not mean that they are

entirely free of air pollutant emissions. With the Cymet process, for example, the potential for chlorine gas evolution exists in the electrolytic cells employed. Various chloride compounds or hydrochloric acid mists also could be emitted. With the Arbiter process, there exists the potential for emissions of ammonia and various ammonia salts from the leaching circuit and other process equipment vented to the atmosphere. With both processes, however, the routing of gases evolved from various process equipment to adequate treatment facilities, such as water scrubbers, combined with adequate building ventilation and, in the case of the Cymet process, the maintenance of low electrolytic cell voltages and current densities, should reduce these emissions to negligible levels, even when compared to air pollutant emissions from pyrometallurgical processes that are well controlled.

Concerning the area of solid waste disposal, on balance it appears that this problem may be lessened somewhat by hydrometallurgical processes compared to pyrometallurgical processes. With pyrometallurgical processes the iron and gangue contained in the concentrates is eliminated and discarded in the form of a silica slag. A typical concentrate may contain 25, 30, and 15 percent by weight of copper, iron, and gangue materials. Thus, for each ton of copper produced, 1.8 tons of iron and gangue are typically slagged with 0.6 ton of silica to produce a solid waste product of 2.4 tons by conventional pyrometallurgical smelting processes. With the Cymet process, however, the iron is recovered as electrolytic iron for sale and only the gangue is discarded. Thus, for each ton of copper produced, only 0.6 ton of solid

waste product is produced (no silica is required for slagging). With the Arbiter process the iron is not recovered and thus, for each ton of copper produced, only 1.8 tons of solid waste is produced.

With either hydrometallurgical or pyrometallurgical processes, however, the problem of disposing of the sulfur contained in the concentrates remains. If markets are found for the sulfur by-products—sulfuric acid, elemental sulfur or ammonium sulfate—then sulfur disposal would, of course, present no major problems to either the conventional pyrometallurgical process, the Cymet process, or the Arbiter process. If suitable markets cannot be found, however, these problems are minimized by the Cymet process, both from the point of view of the quantity of solid waste generated and by the associated potential water pollution problems, since elemental sulfur is the resulting by-product from the concentrate sulfur. With most pyrometallurgical processes and the Arbiter process, the only alternative to markets for sulfuric acid or ammonium sulfate is the production of gypsum (calcium sulfate). The potential environmental problems associated with gypsum production are discussed in Section 8 of this report.

3.2.3 Zinc Extraction

Hydrometallurgical processes are not entirely new to the zinc industry as electrolytic extraction, using chemical leaching, has been practiced since the early 20th century. This process requires the oxidation of the sulfide concentrate to sulfates by roasting, thus presenting possible air pollution problems through the emission of sulfur oxides to the atmosphere, as discussed in Section 3.1.2. However, emissions from zinc roasters can be reduced to acceptable levels with relative ease. As a consequence, there is little incentive from an air pollution viewpoint for the development of hydrometallurgical processes.

The most promising technique for the chemical treatment of zinc sulfide ores is the direct leaching of zinc concentrate with sulfuric acid. This process has been piloted by the Cheminco and the Dowa mining companies in Japan.[12]

With this process, zinc concentrate is contacted with sulfuric acid at elevated temperatures and high pressure. The following reaction takes place:[13]

$$2ZnS + 2H_2SO_4 + O_2 \rightarrow 2Zn\ SO_4 + 2S + 2H_2O.$$

Elemental sulfur is produced as a by-product. The resulting slurry can be purified and subjected to electrolysis to produce electrolytic-grade zinc. The sulfur, which is removed and concentrated during the purification step, can be separated from the solid residue by flotation, or by melting and filtering to produce a high-purity sulfur by-product.[12] Since the economics of this process are reported to be favorable,[13] it is possible that the first purely hydrometallurgical zinc extraction process will use this technique.

3.2.4 Lead Extraction

There are a number of experimental hydrometallurgical extraction techniques for lead sulfide ores presently under development, which may in the future lead to economical treatment of lead concentrates. Following is a discussion of these investigations which show some degree of promise for future commercial application.

Leaching with fluorsilicic acid--

Leaching of lead sulfide in fluorsilicic acid has been investigated by Bjorling and Elfstion on an experimental basis.[14,15] By using nitric acid as a catalytic agent, it has been shown that a lead fluorsilicate solution can be produced from concentrates, followed by electrolytic precipitation of lead on a cathode. Indeed, the latter part of this process has been commercially demonstrated in the production of electrolytic-grade lead (the Betts process). However, the feed material in the Betts process is blast furnace lead bullion, and a sulfur elimination problem is not encountered.

Though the concentrate leaching step is only at the laboratory stage at this time, its ability to successfully leach lead ores without subsequent toxic gas formation makes it an important process worthy of further investigation.

Amine leach--

Another method proposed for the treatment of galena (PbS) is based on the solubility of lead oxide (PbO) and lead sulfate ($PbSO_4$) in an aqueous solution of certain alkylene and alkanol amines.[16,17] Diethylenetriamine (DETA) is used to extract the lead sulfate into solution, while most sulfates, gold, silver and other impurities which may be found in the concentrate are insoluble.[16]

The process is basically a two-step process. The lead concentrate is converted to lead sulfate in a pressure leaching step in the presence of sulfuric acid. The lead sulfate is then extracted by DETA, followed by precipitation as lead carbonate or electrolytic extraction as metallic lead.

The importance of the initial pressure leaching step is due to the fact that lead oxide has limited solubility in DETA compared to lead sulfate under the same conditions.[16] Thus, the higher the conversion efficiency of lead sulfide to lead sulfate, the greater the overall recovery of the process. The pressure leaching step serves to eliminate some sulfide impurities which are extracted into the sulfuric acid leach solution in addition to converting lead sulfide to lead sulfate. Impurities which remain with the lead sulfate residue are separated during the final amine leaching step.

At this time the principal problem preventing further development of this process lies in the design and construction of the autoclave needed for the leaching step.[16,18,19] Probable temperature and pressure requirements for an autoclave would be 200°C and 800 psig (100 psi oxygen).[19]

This process is receiving considerable attention and in a few years may show definite commercial potential. Figure 3-44 shows a proposed process flow chart for the treatment of lead sulfide concentrates using an amine leach.

Ferric ion leaching --

Both ferric sulfate ($Fe_2(SO_4)_3$) and ferric chloride ($FeCl_3$) will react with lead sulfide as follows:

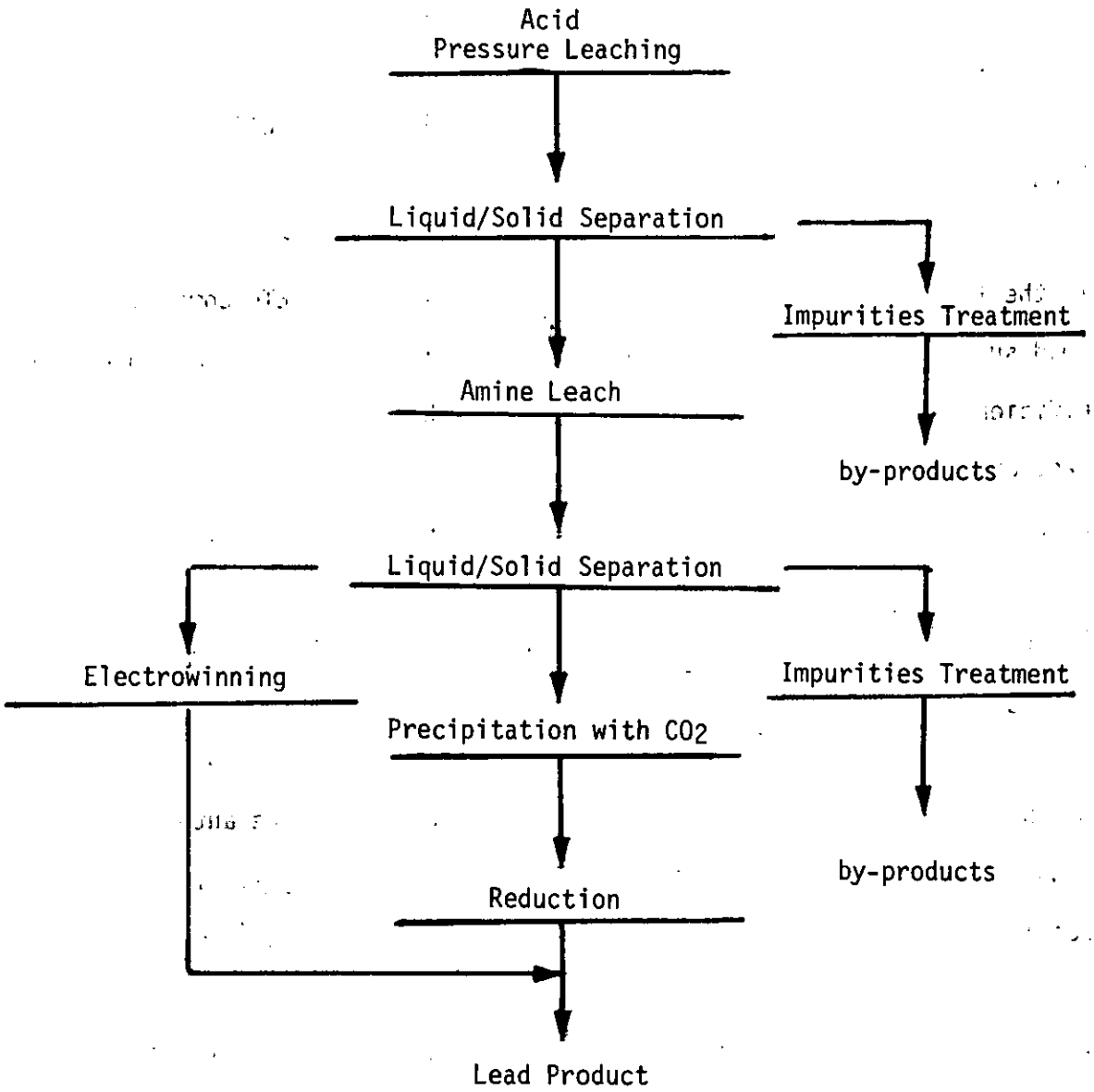

Figure 3-44. Treatment of galena using amine leaching.[19]

$$PbS + Fe_2(SO_4)_3 = PbSO_4 + 2FeSO_4 + S.$$ [17]

or $$PbS + 2FeCl_3 = PbCl_2 + 2FeCl_2 + S.$$ [18]

Though both processes are similar, the ferric sulfate leach seems to give better results and appears to be the less expensive of the two processes.[16]

The ferric sulfate leaching technique under investigation by Bureau of Mines researchers consists of the following:[16]

(a) Galena (PbS) leaching with hot, aqueous ferric sulfate solution to produce lead sulfate ($PbSO_4$) and elemental sulfur.

(b) Treatment of lead sulfate with ammonium carbonate, converting it to lead carbonate ($PbCO_3$) which is acid soluble. Ammonium sulfate is produced as a by-product.

(c) Dissolution of the lead carbonate by acid.

(d) Electrolyzing of the pregnant acid solution to recover 99.9% Pb.

(e) Extraction of sulfur with organic solvents from the acid solution.

Laboratory experimentation has concluded that about 89% of the lead can be recovered as metal.[16] Most of the sulfur is recovered as elemental sulfur without any release of sulfur gases to the atmosphere.[16]

Research has also been conducted into the development of a process using a ferric chloride ($FeCl_3$) leach.[20] With this process, the bulk lead concentrate is oxidized with $FeCl_3$ extracting the lead into solution as lead chloride ($PbCl_2$). Elemental sulfur is formed during the reaction, and is collected with the residue.[20] Electrolysis can then be utilized to recover the lead.

Both ferric sulfate leaching and ferric chloride leaching seem to have definite merit both from a production standpoint and for pollution control. To date no experimental installations have been initiated, probably due to the fact that, as yet, neither leaching technique approaches the production efficiencies of present pyrometallurgical processes. However, as experimentation continues with this technique, extraction efficiency may increase to the point that it could become a viable production process.

Figure 3-45 shows a proposed flow chart for the treatment of lead sulfide concentrates using a ferric sulfate leach.

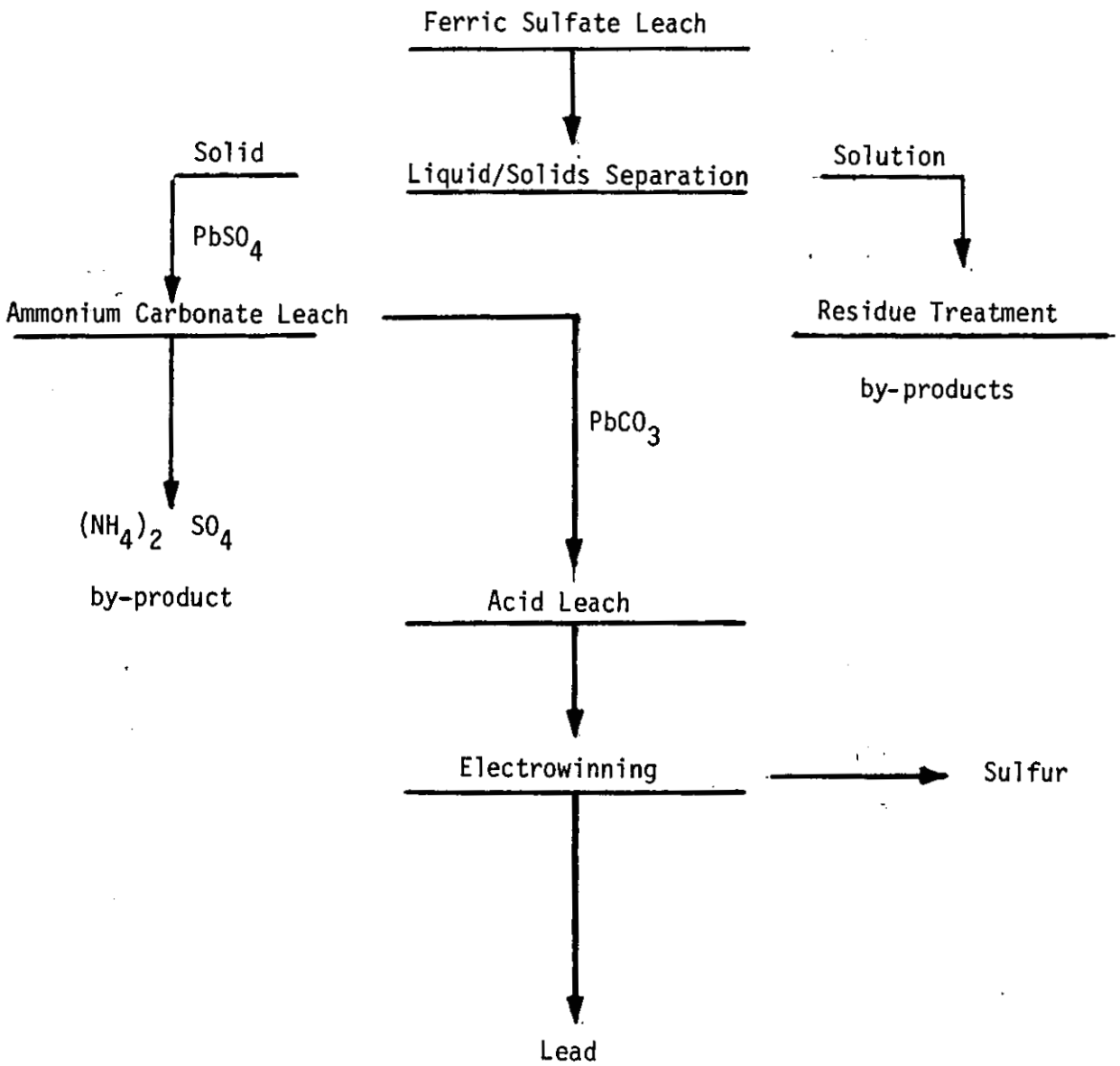

Figure 3-45 Treatment of galena using ferric sulfate leaching.

Copper Extraction

1. V. N. Mackiw, Current Trends in Chemical Metallurgy, Canadian Journal of Chemical Engineering, February 1968, pp. 3-15.

2. Hydrometallurgy: Copper's Solution for Pollution, Chemical Week, May 17, 1972, pp. 27-28.

3. Anon., Canada's Sherritt/Cominco to Pilot Pollution-Free Copper Recovery Process, Air/Water Pollution Report, November 12, 1973, p. 458.

4. M. Ichijo, Japan Today - Pollution-Free Metallurgy, Mining Magazine, November 1971, pp. 471-474.

5. E.S. Allen and P.R. Krusei, Cymet Electrometallurgical Processes for Treating Base Metal Sulfide Concentrates, Paper presented at Joint Meeting MMIJ-AIME, May 1972 in Tokyo.

6. Personal communication - F. L. Porter (EPA) with E.S. Allen (Cyprus), Cyprus Mines Corp., Los Angeles, California, January 14, 1973.

7. Anon., CPI News Briefs, Chemical Engineering, July 9, 1973, p. 116.

8. F.C. Price, Copper Technology on the Move - Cymet Process, Chemical Engineering, April 16, 1973, pp. UU-WW.

9. In Clean Air Copper Production, Arbiter Process is First Off the Mark, Engineering and Mining Journal, February 1973, pp. 74-75.

10. S.A. Gardner and G.C.I. Warwick, Pollution-Free Metallurgy: Copper via Solvent Extraction, Engineering and Mining Journal, April 1971, pp. 108-109.

11. F. Habashi, Principles of Extractive Metallurgy, Volume 2 - Hydrometallurgy, Gordon and Breach, Science Publishers Inc., New York, 1970, pp. 101-119.

Zinc Extraction

12. Mackiw, V.N. "Current Trends in Chemical Metallurgy," The Canadian Journal of Chemical Engineering, Vol. 46, Feb. 1968, p. 3-15.

13. Samrau, Konrad T. "Control of Sulfur Oxide Emissions from Primary Copper, Lead and Zinc Smelters - A Critical Review," Journal of the Air Pollution Control Association, Vol. 21, No. 4, April 1971, pp. 185-194.

Lead Extraction

14. Bjorling, G., and G.A. Kolta. Oxidizing Leach of Sulfide Concentrates and Other Materials Catalyzed by Nitric Acid. Proc. Intern. Mineral Progress. Congr. (New York), 1964, pp. 127-138 (Pub. 1965).

15. Bjorling, G., and N.G. Elfstrom. Extraction of Lead from Galena Concentrates by Pressure Leaching. Abstracts of Papers at XVIIIth IUPAC Congress Montreal (1961), pp. 171-172.

16. Haver, F.P., K. Vchida, and M.M. Wong. Recovery of Lead and Sulfur from Galena Concentrate Using Ferric Sulfate Leach. Bureau of Mines Report of Investigation 7360, Mar. 1970, 13 pages.

17. Forward, F.A., H. Veltman, and A. Vizsolyl. Production of High Purity Zinc and Lead by Ammine Leaching. Proc. 5th Internal Miner. Processing Cong. Inst. Min. and Met., London, 1960, pp. 823-837.

18. Semrau, Konrad T. "Control of Sulfur Oxide Emissions from Primary Copper, Lead, and Zinc Smelters - A Critical Review." Journal of the Air Pollution Control Association, Vol. 21, No. 4, April 1971, p. 189.

19. Mackiw, V.N. Current Trends in Chemical Metallurgy, The Canadian Journal of Chemical Engr., Vol. 46, February 1968, pp. 3-15.

20. Habashi, Fathi. Principles of Extractive Metallurgy, Vol. 2 Hydrometallurgy, Gordon and Breach (New York) (1970), p. 99.

4. CONTROL TECHNIQUES

4.1 SULFURIC ACID PLANTS

4.1.1 Summary

The most common technique for control of emissions of sulfur oxides from copper, lead, and zinc smelters is catalytic oxidation of sulfur dioxide in the smelter off-gases to sulfur trioxide for the production of sulfuric acid. Contact sulfuric acid plants can be designed to produce acid from gas streams containing from a fraction of a percent of sulfur dioxide up to the highest concentrations feasible in smelting operations. However, economic considerations usually restrict the applications to concentrations (>3-1/2 or 4%) which allow autogenous operation.

Sulfuric acid mist and smelter off-gas contaminants can present difficulties in the production of sulfuric acid due to corrosion of heat exchanger tubes, plugging of catalytic beds, or partial deactivation of the catalyst. These difficulties can be minimized by adequate design and proper maintenance of the gas purification system and the acid plant.

It is widely accepted that fluctuations in inlet volumetric flow rates and sulfur dioxide concentrations adversely affect sulfur dioxide emissions from sulfuric acid plants, although no data exist to quantify these effects. An EPA analysis, however, indicates that averaging sulfur dioxide emissions over a time period of six hours is sufficient to mask normal fluctuations in sulfur dioxide emissions, including the large fluctuations encountered with copper converter effluent gases.

Sulfuric acid plant vendors guarantee maximum sulfur dioxide emission concentrations of 2000 ppm for metallurgical single-stage absorption plants and 500 ppm for metallurgical dual-stage absorption plants during three- to five-day new plant performance tests. These guarantees are for maximum sulfur dioxide emissions and include inherent allowances for increased emissions due to inlet sulfur dioxide fluctuations. However, these guarantees do not include allowances for increased emissions due to catalyst deterioration.

Sulfur dioxide emissions from a double-absorption sulfuric acid plant operating at a copper smelter were continuously monitored by EPA over a seven-month period. The data show that a six-hour averaging time was sufficient to mask the normal fluctuations of outlet SO_2 concentration. After taking into account 10% catalyst deterioration and extrapolating the data to allow for the highest inlet SO_2 concentrations expected from copper, lead and zinc smelters, the data demonstrated that emissions can be limited to 500 ppm 95% of the time.

Manufacturers of acid mist eliminators guarantee maximum stack emissions of 1 mg/ft^3 for high-efficiency acid mist eliminators. These manufacturers do not guarantee any form of visible emission limitation, but acid mist emissions of 1 mg/ft^3 normally result in stack plumes of less than 10% opacity. Thus, present control technology is adequate to restrict acid mist emissions to low-opacity wisps, except during infrequent upsets.

4.1.2 General Discussion

The basic steps in the contact process for the manufacture of sulfuric acid from sulfur dioxide-bearing gases are shown schematically in Figure 4-1. The off-gases are cooled and cleaned to remove particulates and volatile metals, acid mist is removed in an electrostatic mist precipitator, and the gases are dried with 93% sulfuric acid. The cool, dry gases then pass through a series of gas-to-gas heat exchangers to heat the off-gases to the optimum temperatures for catalytic conversion of sulfur dioxide to sulfur trioxide (SO_3). Single-stage absorption acid plants use three or four stages of converter catalyst, whereas dual-stage absorption plants use one, two, or three stages of catalyst before the first absorption tower. Since the conversion of sulfur dioxide to sulfur trioxide is exothermic, the converter outlet gases must be cooled before passing through the absorption tower. These outlet gases are passed counter-current to the inlet gases in the heat exchangers mentioned above. The sulfur trioxide is then absorbed by 98% sulfuric acid in an absorption tower to yield the product. The remaining gases are then treated to remove acid mist and spray, and vented to the atmosphere if a single-stage absorption acid plant is employed. In a dual-stage absorption acid plant, the gases exhausted by the first absorption tower are passed through a second series of heat exchangers and catalytic converter stages to oxidize the sulfur dioxide remaining in the gases. Normally, this step employs one or two stages of catalyst. The gases then pass through a second absorption tower,

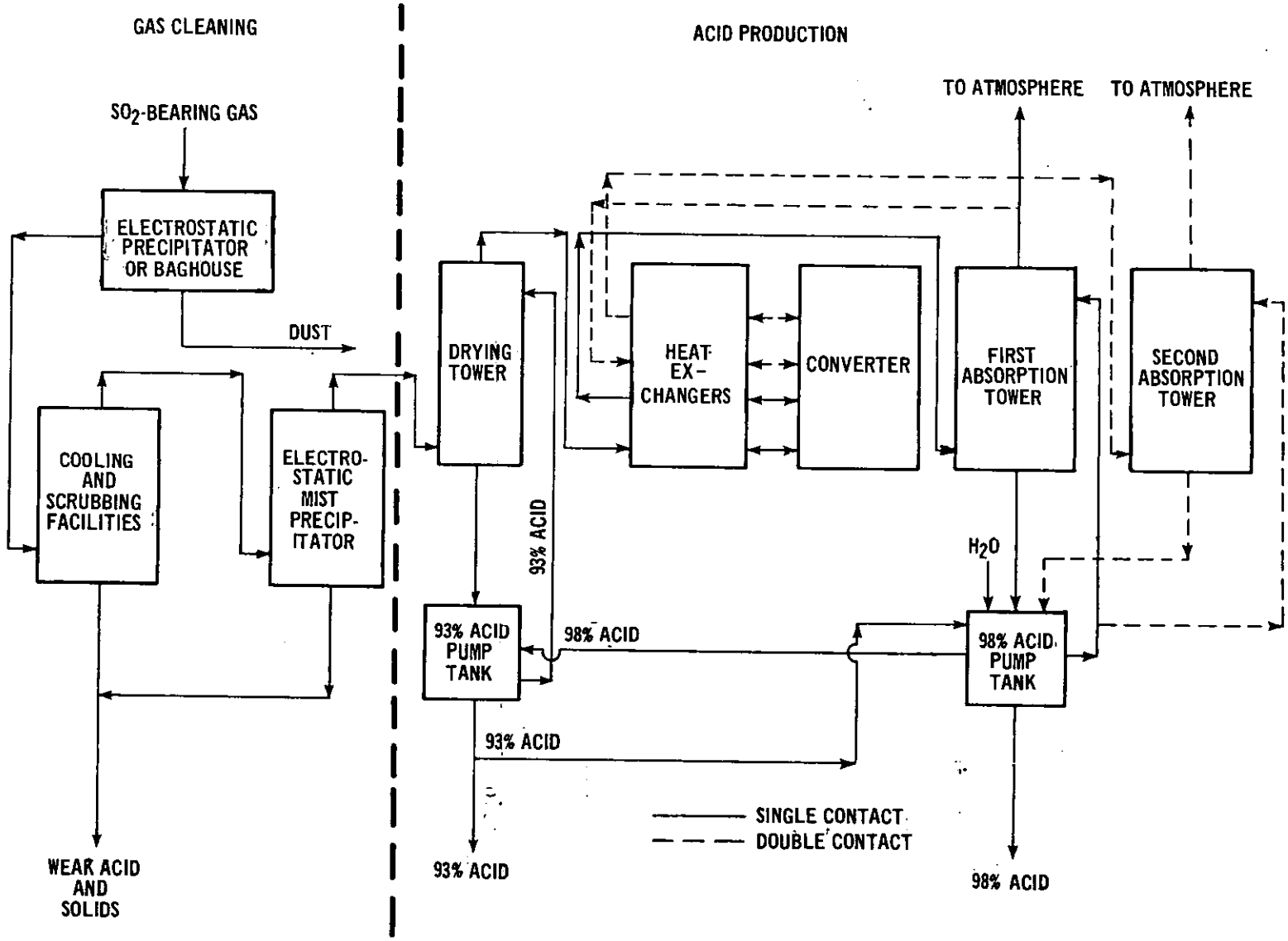

Figure 4-1 Sulfuric acid plant.

where sulfur trioxide is absorbed by sulfuric acid as in the first absorption tower. The waste gases are then treated to remove acid mist and spray, and vented to the atmosphere.

Specific design parameters, such as the number of converter stages, catalyst inlet and outlet gas temperatures, and the degree of sulfur dioxide conversion in each catalyst stage, are based on reaction kinetics and equilibrium considerations. In dual-stage absorption acid plants, the removal of sulfur trioxide in the first absorption tower shifts the sulfur dioxide/sulfur trioxide equilibrium in favor of formation of more sulfur trioxide and results in significantly less unconverted sulfur dioxide.

Although a gas stream containing more than 3-1/2% sulfur dioxide is a prime consideration for acid production in single-stage absorption acid plants and a gas stream containing more than 4% sulfur dioxide is a prime consideration in dual-stage absorption acid plants, these considerations are not due to technical limitations.[1,2] Contact sulfuric acid plants can be designed to produce acid from gases containing a fraction of a percent of sulfur dioxide.[1] Economic considerations, however, usually restrict the applications to higher concentrations, since operating costs rise rapidly as the concentration of sulfur dioxide decreases.

From mid-1971 until the end of 1972, however, the Onahama Smelting and Refining Co. copper smelter in Japan produced concentrated sulfuric acid from the off-gases of a green-charged reverberatory smelting furnace.[3,4] At this smelter, a pre-existing single-stage sulfuric acid plant was

redesigned to treat weak sulfur dioxide off-gases as low as 1.5% sulfur dioxide (averaging 2.5% sulfur dioxide), while maintaining a conversion efficiency of almost 97%.[3,4] Operation on such low sulfur dioxide concentrations required that the smelting furnace off-gases be refrigerated to approximately 15°C and dried to prevent exorbitant dilution of the product acid. The cooled and dried gas then required reheating to maintain optimum catalyst converter temperatures.[3,4]

Although this acid plant is no longer in operation, it was not shut down as a result of technical problems that developed. Onahama Smelting and Refining expanded the smelter by the construction of an additional reverberatory smelting furnace and additional copper converters. The acid plant now controls sulfur dioxide emissions from the new copper converters. A prototype magnesium oxide (MgO) gas scrubbing system, developed by Onahama Smelting and Refining, controls sulfur dioxide emissions from the reverberatory smelting furnaces.[5]

Gases containing less than 4% sulfur dioxide frequently require extra cooling in the gas purification system to remove excessive water vapor, and gases containing less than 3% sulfur dioxide frequently require refrigeration to condense enough water to obtain an acceptable water/sulfur ratio.[2] A low water/sulfur ratio in the gases is necessary since excessive water remaining in the gas will cause dilution of the product acid below commercial-grade strength.

Single-stage sulfuric acid plants are not able to operate autothermally on off-gas streams containing less than 3-1/2% sulfur dioxide,[2] and dual-stage absorption acid plants require off-gases

with a sulfur dioxide concentration somewhat higher (about 4%) to operate autothermally.[6,7] Acid plants normally contain fired heaters for start-up operation. However, if off-gases containing less than 3-1/2% sulfur dioxide, or 4% sulfur dioxide in the case of dual-stage acid plants, are processed on a continuous basis, large fired heaters for continuous operation to heat the gases to the temperatures necessary to obtain rapid and effective conversion of sulfur dioxide to sulfur trioxide must be incorporated.

On the other hand, gases with sulfur dioxide concentrations of 9% or more usually do not contain sufficient oxygen for the conversion of sulfur dioxide to sulfur trioxide. It is necessary to dilute these gases with air or other off-gases containing excess oxygen before the gases enter the acid plant converters to provide the proper ratio of oxygen to sulfur dioxide.

For maximum operating efficiency, metallurgical sulfuric acid plants should operate on a gas stream of uniform flow rate and sulfur dioxide concentration, such as those from roasters or smelting furnaces. Gas streams of fluctuating flow rates and sulfur dioxide concentrations, such as those from copper converters, require acid plants to be designed for the worst conditions and with adequate controls to handle variations in sulfur dioxide concentration. Variations in feed gas volume are less of a problem and can be tolerated within reasonable limits.[1,8]

In order to reduce the cost of sulfur recovery, proper design necessitates that gas volumes be minimized and sulfur dioxide concentrations be maximized as much as is practical. Effective methods of increasing

the sulfur dioxide concentration include oxygen enrichment of combustion air and the reduction of air infiltration by using tight-fitting hoods.[3,4] (See Section 3.1-Pyrometallurgical Processes.) Use of such methods increased the sulfur dioxide content of the off-gases from the Onahama reverberatory smelting furnace previously mentioned by approximately 50%.[3,4]

The presence of high levels of solid or gaseous contaminants in smelter off-gases can present difficulties in the production of sulfuric acid. In general, these contaminants are removed from the gas stream prior to the catalyst converters. Their reclamation represents an economic recovery or prevents damage to the acid plant or contamination of the product acid. The off-gases from smelting operations contain varying amounts of entrained dust as well as fumes formed by vaporization and subsequent condensation of volatile components. This includes compounds of arsenic, antimony, cadmium, mercury, etc., in addition to copper, lead, and zinc.[9]

Most of the dust and fume is recovered in dry-type collectors, such as cyclones, electrostatic dust precipitators, and baghouses, for its economic value.[9] However, in many cases, additional cleaning is required to remove residual quantities in order to protect the acid plant.[10] The major problems caused by these residual quantities include plugging of the catalyst beds with deactivation of the catalyst and contamination of the product acid.[10] Chlorine and fluorine attack of stainless steels and perforation of lead sheathing by small amounts of mercury also present difficulties.[10] However, anticipation of the potential magnitude of these problems, followed by installation of adequately

designed gas cleaning systems, will ensure reduction of the concentrations to tolerable levels.

Table 4-1 contains estimates of the maximum levels of impurities that can be tolerated in smelter off-gases. The degree of catalyst deterioration experienced at these various impurity levels can be accommodated by an acid plant which shuts down once per year to screen the catalyst and repair equipment. Table 4-1 also contains the estimated upper level of impurities that can be removed by typical gas purification systems with prior coarse dust removal. Although complete removal of contaminants from the off-gases is not practical, 99.5 to 99.9% overall removal is considered to be attainable.[10] For especially severe cases of contamination, more elaborate cleaning systems must be designed specifically for the problem contaminants. The details vary with the contaminants, but the general solution includes the use of more efficient dust or mist collectors and the scrubbing of the gases with liquids which absorb the contaminants.

Although it is widely accepted that metallurgical off-gas contaminants can lead to plugging of the catalyst beds or partial deactivation of the catalyst, there exists a general lack of substantial numerical qualification of the effect of catalyst deterioration on sulfur dioxide emissions from metallurgical sulfuric acid plants. Sulfur dioxide emission data gathered by simultaneous EPA source testing of the No. 6 and No. 7 single-stage acid plants at the Kennecott Garfield smelter during the period of June 13-16, 1972, however, indicate that normal catalyst deterioration and differences in acid plant design and technology can result in a 30% increase in sulfur dioxide emissions.[8] A summary of this analysis is included in Appendix III.

Table 4-1 ESTIMATED MAXIMUM IMPURITY LIMITS FOR METALLURGICAL OFF-GASES USED TO MANUFACTURE SULFURIC ACID[10]

Substance	Approximate Limit, (Mg/Nm^3)[a] Acid Plant Inlet	Gas Purification System Inlet[b]
Chlorides, as Cl	1.2	125[d]
Fluorides, as F	0.25	25[e]
Arsenic, as AS_2O_3	1.2[c]	200
Lead, as Pb	1.2	200
Mercury, as Hg	0.25	2.5[f]
Selenium, as Se	50[c]	100
Total Solids	1.2	1000[g]
H_2SO_4 Mist, as 100% acid	50	-
Water, as H_2O	-	400×10^3

Notes:

(a) Basis: dry off-gas stream containing 7% sulfur dioxide.

(b) For a typical gas purification system with prior coarse dust removal.

(c) Can be objectionable in product acid.

(d) Must be reduced to 6 if stainless steel is used.

(e) Can be increased to 500 if silica products in scrubbing towers are replaced by carbon; must be reduced if stainless steel is used.

(f) Can be increased to 5-12 if lead ducts and precipitator bottoms are not used.

(g) Can usually be increased to 5000-10,000 if weak acid settling tanks are used.

At the time of the EPA source testing, the No. 6 (Parsons) plant was in the second month of its twelve-month catalyst cleaning cycle and the No. 7 (Monsanto) plant was in the twelfth and last month of its catalyst cleaning cycle. A statistical analysis of the emission data leads to the conclusion that the 30% greater average emissions of the No. 7 plant, compared to the average emissions of the No. 6 plant, are statistically significant at the 90% probability level. This difference in emissions reflects not only catalyst deterioration but also other factors, such as differences in emissions due to design or construction variations between Parsons 1967 acid plant technology and Monsanto 1970 acid plant technology. However, it is safe to assume that the major portion of this difference in emissions is due to catalyst deterioration.

Although additional data are not available, metallurgical sulfuric acid plant vendors have agreed that the EPA estimate of a 30% increase in SO_2 emission concentrations as the upper limit for deterioration of catalyst performance between catalyst screenings for single-stage acid plants is also a reasonable estimate for dual-stage acid plants.[7] The period between catalyst screenings is primarily a function of pressure drop rather than conversion efficiency. Generally, the first bed depth is 50% greater than the theoretical design depth in order to compensate for the anticipated decrease in conversion efficiency as the catalyst becomes partially plugged and the pressure drop increases between catalyst screenings.[7] Catalysts are guaranteed for various periods although longer guarantees necessitate the

use of more catalyst for a larger conversion efficiency margin. The screening period varies from one year to two years depending upon blower capacity and the particulate collection efficiency of the gas purification equipment. As a rule of thumb, for an application in which the catalyst is not subject to poisoning, the catalyst in the first bed should be replaced after 10-12 years if performance has deteriorated.[7]

Acid plant vendor guarantees are based on new plant performance and do not include a margin for increases in emissions due to catalyst or plant deterioration with age.[7] Furthermore, these guarantees are for acid plant performance only and obviously do not include smelter emissions which are bypassed to the atmosphere during periods of acid plant shutdown for catalyst screening and/or replacement or other plant maintenance.

In some cases, trace amounts of contaminants can pass through both the gas cleaning equipment and the catalyst to contaminate the product acid. In these cases, the acid can either be sold to outlets that are not sensitive to the contamination, cleaned of the objectionable contamination, or neutralized and disposed of. The production of dark, discolored acid ("black acid") is a common example of acid contamination. Frequently, within multi-hearth roasters or lead sintering machines, various organic agents entrained with the concentrates are merely vaporized or only partially decomposed. Trace amounts of these organic agents can pass through both the gas cleaning equipment and the catalyst and be captured in the product acid, leading to the production of "black acid".

Normally, within fluid-bed roasters, however, these organic flotation agents are completely decomposed and thus sulfuric acid produced from these off-gases is free of organic contaminants. Although there are techniques which can be used to purify or bleach acid, these techniques are usually costly and sometimes are not entirely satisfactory.[10,12] For example, oxidation of the organic contaminants by hydrogen peroxide is accompanied by the release of water which dilutes the product acid. Similarly, the use of potassium permanganate results in the contamination of the acid by manganese ions which can be objectionable in some processes.[13] Experiments have been conducted using ozone as the oxidizing agent and the results are promising.[13] However, there are outlets for sulfuric acid which are not sensitive to color, such as the production of fertilizers or alkylation processes at refineries.

Contamination of product sulfuric acid by other contaminants, such as mercury, cadmium or arsenic, can also occur. In general, these contaminants are more difficult to remove from the product acid and present greater problems than the production of "black acid." However, the Bunker Hill Company recently announced development of a process capable of reducing mercury levels in sulfuric acid from 100 ppm to 1 ppm.[14]

Depending upon the amount of excess oxygen, the temperature, and the presence of metallic oxide particulates in the off-gases, some sulfur trioxide is formed during the various smelting operations. In the presence of water or weak acid vapors, sulfur trioxide forms sulfuric acid mist at temperatures of less than 200°C.[10] If not removed, the mist particles will cause corrosion problems and the iron

sulfates resulting from corrosion can be deposited on the catalyst. Heat exchanger corrosion is serious, not only because of the physical damage to the equipment, but also because leaks will result in a substantial increase in the concentration of sulfur dioxide contained in the gas stream to the final absorber. This sulfur dioxide is not absorbed and is emitted to the atmosphere.

Sulfuric acid mist particles are extremely difficult to remove from the gas stream, and special equipment, such as electrostatic mist precipitators, are required. To guard against small amounts of dust or mist which can be carried through precipitators due to flow surges or other troubles, a fiber-bed filter, such as the Brink Mist Eliminator, can be used as a backup device.[2,10] Although maintenance benefits and corresponding sulfur dioxide emission abatement benefits can be realized by using fiber-bed filters ahead of heat exchangers and catalyst stages, such installations are still infrequent.[10,13,15] However, fiber filters have been widely accepted for removal of sulfuric acid mist from absorber effluents, and they can be utilized to protect process equipment.[10,13] In general, by adequate plant design and proper maintenance, the effects of corrosion due to acid mist can be minimized.[15,16] Furthermore, due to the use of special linings, demisters, and special alloy heat exchanger tubes, sulfuric acid plants are currently being designed to have extremely long life and low maintenance.

Acid mist emissions from dual-stage sulfuric acid plants are normally less than acid mist emissions from single-stage acid plants because the mist loading of the final absorbing tower is less.[7] However, an acid mist eliminator must be installed following the first

absorption tower in dual-stage acid plants to protect downstream equipment from corrosion. Absorption towers have inherent lags and are extremely sensitive to many variables, including inlet sulfur trioxide concentration, absorbing acid strength, temperature, and flow rate. However, present control technology is adequate to restrict acid mist emissions to low-opacity wisps, except for infrequent upsets.[7] Such upsets are caused by the absorbing sulfuric acid concentration becoming greater than azeotropic and thus allowing sulfur trioxide to remain unabsorbed by the acid and create a visible acid mist plume as it combines with water after leaving the stack. Mist eliminators are particulate collection devices and obviously cannot prevent acid mist emissions produced during upsets by combination of sulfur trioxide emissions with water after leaving the mist eliminator.

Manufacturers of mist eliminators guarantee maximum stack emissions of 1 mg/ft^3 for high-efficiency mist eliminators and 2 mg/ft^3 for lower efficiency models.[7] Mist emissions are normally less than 50% of the guaranteed value.[7] Under worst conditions the 2 mg/ft^3 emission value can represent a 20% opaque plume, but normally the emissions from a high-efficiency mist eliminator are less than 10% opacity.[7]

Typically, sulfuric acid plant vendors guarantee maximum sulfur dioxide emission concentrations of 2000 ppm for metallurgical single-stage absorption plants and 500 ppm for metallurgical dual-stage absorption plants during new plant performance tests.[7,11,15,17] Such tests are conducted for three to five consecutive days while the plant is operating on gases that contain the percentages of sulfur dioxide

specified in the design basis for the plant and while the plant is not experiencing any malfunctions. It is significant to note that these guarantees are for maximum sulfur dioxide emissions and thus include inherent allowances for increased emissions due to inlet sulfur dioxide fluctuations. Although these guarantees are for new plants and do not include allowances for increases in emissions due to catalyst or plant deterioration with age, one domestic vendor does guarantee these emission levels for one year after start-up.[7,15]

An EPA analysis (full text in Appendix III) of approximately ten weeks of emission data from one of the Kennecott Copper Corporation single-stage sulfuric acid plants at Garfield, Utah, showed sulfur dioxide emissions during normal operations of less than 2000 ppm when averaged for long periods, such as one week.[8] The specification of "normal" operations was determined by analyzing acid plant operating logs and inlet flow rate and sulfur dioxide concentration data to ascertain the extent of malfunctions and startup and shutdowns during the period. It is significant to note that the long-term average SO_2 concentration value is considerably less than the emission concentration (2700 ppm) corresponding to the vendor guarantee of 95% conversion at 5% SO_2 inlet.

As mentioned earlier, for maximum operating efficiency metallurgical sulfuric acid plants should operate on gas streams of uniform flow rate and sulfur dioxide concentration. However, off-gases from some smelting operations, such as copper converting, exhibit extreme fluctuations in both volumetric flow rate and sulfur dioxide concentration. Although these fluctuations can be minimized by blending with other off-gas streams, or by various operational techniques as discussed in

Section 3.1.1.3 of this document, they cannot be eliminated and remain substantial. Although it is widely accepted that fluctuations in off-gas flow rate and sulfur dioxide concentration adversely affect acid plant performance, there exists little data to quantify the effect on sulfur dioxide emissions.

An analysis of the Kennecott data mentioned above showed that instantaneous sulfur dioxide emissions varied greatly (<1000 ppm to >7000 ppm) depending upon fluctuations in inlet SO_2 concentrations (<1% to >7%). Thirteen data periods exceeded the vendor's guarantee (2700 ppm) when averaged over a four-hour duration.[8] Increasing the averaging time to six hours decreased the number of periods exceeding 2700 ppm to seven. Increasing the reference sulfur dioxide emission concentration from 2700 ppm (the vendor's guarantee) to 3000 ppm (approximately 10% greater) reduced the number of periods exceeding the reference emission level by approximately 50%. Further increases in either the averaging time or the reference sulfur dioxide emission concentration selected for comparison did not significantly decrease the number of periods exceeding the reference sulfur dioxide emission concentration. Further analysis of the same data, based on the actual time during which sulfur dioxide emissions exceeded the reference concentration level, led to the same conclusions. Thus, based on this analysis and not considering catalyst deterioration, it appears that an averaging time of six hours and an emission level 10-20% above commonly accepted vendor/contractor sulfur dioxide emission guarantees effectively masks normal, short-term fluctuations in sulfur dioxide emissions.[8]

Sulfur dioxide emissions from a double-absorption sulfuric acid plant operating on copper converter off-gases at the ASARCO, El Paso, Texas, copper/lead smelter were monitored by EPA through the use of a continuous monitoring system from mid-May through November 1973. The data have been validated to insure their accuracy and analyzed by EPA. The data show that six-hour averages effectively mask the extreme fluctuations encountered with copper converter off-gases. Sulfur dioxide emissions were limited to 250 ppm or less 95% of the time, but the inlet sulfur dioxide concentration was relatively low and no catalyst deterioration was detected during the period of the test. Taking into account an increase in emissions of 10% due to catalyst deterioration and extrapolating the data to allow for the highest inlet SO_2 concentrations expected from copper, lead and zinc smelters (9% SO_2), the data showed that SO_2 emissions can be limited to 500 ppm or less 95% of the time and 650 ppm or less 98.8% of the time. A complete analysis of the double-absorption sulfuric acid plant data is included in Appendix VI.

The use of sulfuric acid plants to control sulfur dioxide emissions from copper, lead and zinc smelters is well demonstrated technology. As discussed in Section 5 of this document, nine of the fifteen domestic copper smelters produce sulfuric acid from process off-gases. Two dual-stage absorption acid plants were recently commissioned, one at ASARCO's El Paso, Texas, smelter in December 1972 and another at Anaconda's Anaconda, Montana, smelter in May 1973. Three new double-absorption sulfuric acid plants are scheduled to begin operation in 1974; two in mid-1974 at Inspiration Consolidated Copper Co.'s Inspiration, Arizona, smelter and Magma Copper's San Manuel, Arizona, smelter; and one in September 1974 at Kennecott's Hurley, New Mexico, smelter. At each of these installations, off-gases from roasters and/or copper converters are utilized to manufacture

sulfuric acid. At the Inspiration Consolidated Copper Smelter, however, off-gases from the electric smelting furnace will be utilized to manufacture acid.

Of the six domestic lead smelters currently operating, three produce sulfuric acid from the smelter off-gases. All of these acid plants are of the single-stage absorption design and all operate only on the strong off-gas stream (3-1/2% sulfur dioxide or greater) from lead sintering machines.

Of the eight domestic zinc smelters currently operating, six produce sulfuric acid from the smelter off-gases. All of these acid plants are of the single-stage absorption design, and all produce sulfuric acid from the off-gases from zinc roasting facilities.

REFERENCES FOR SECTION 4.1

1. Systems Study for Control of Emissions - Primary Nonferrous Smelting Industry, Arthur G. McKee & Co., Western Knapp Engineering Division, Public Health Service, U.S. Dept. of Health, Education and Welfare, Contract No. PH 86-65-85; June 1969.

2. Semrau, K. T., Control of Sulfur Oxide Emissions from Primary Copper, Lead and Zinc Smelters - A Critical Review, Journal of the Air Pollution Control Association, Vol. 21, No. 4, 185-194, April, 1971.

3. Niimura, M., T. Konada, and R. Kojima, Control of Emissions at Onahama Copper Smelter, Presented at the Joint Meeting of MMIJ-AIME, May 24-27, 1972, Tokyo.

4. Niimura, M., T. Konada, and R. Kojima, Sulfur Recovery from Green-charged Reverberatory Off-gas at Onahama Copper Smelter, TMS Paper No. A73-47, The Metallurgical Society of AIME, New York.

5. Porter, F.L., Personal communication with Mr. H. Ikeda, Onahama Smelting and Refining Co., Onahama, Japan, September 7, 1972.

6. Browder, T.M., Modern Sulfuric Acid Plant Technology, Chemical Engineering Progress, Vol.67, No. 5, 45-50, May 1971.

7. Wood, G.H., Report of April 27, 1973, Meeting with Metallurgical Sulfuric Acid Plant Contractors to Discuss Group IIA NSPS. ESED, U.S. Environmental Protection Agency, Research Triangle Park, N.C.

8. Porter, F.L., and G.H. Wood, "Analysis of Continuous SO_2 Monitor Data for the Kennecott Copper Smelter at Garfield, Utah, and the Determination of an Upper Limit for Sulfuric Acid Plant Catalyst Deterioration," April 18, 1973, ESED, U.S. Environmental Protection Agency, Research Triangle Park, N.C.

9. Phillips, A.M., The World's Most Complex Metallurgy (Copper, Lead, and Zinc), Trans-Met. Soc. AIME, Vol. 224, No. 4, 657-668, August 1962.

10. Donovan, J.R., and P.J. Stuber, Sulfuric Acid Production from Ore Roaster Gases, Journal of Metals, November 1967, p. 45-50.

11. Farmer, J.R., Personal communication with Mr. J.R. Donovan, Monsanto Enviro-Chem Systems, Inc., St. Louis, Mo., February 9, 1973, ESED, U.S. Environmental Protection Agency, Research Triangle Park, N.C.

12. Sittig, M., Sulfuric Acid Manufacture and Effluent Control 1971, Noyes Data Corporation, Park Ridge, New Jersey, 1971.

13. Wood, G.H., Personal communication with Mr. J.R. Donovan, Monsanto Enviro-Chem Systems, Inc., St. Louis, Mo., May 29, 1973. ESED, U.S. Environmental Protection Agency, Research Triangle Park, N.C.

14. Bunker Hill Develops Process to Remove Mercury from Acid. Engineering and Mining Journal, November 1972, p. 259.

15. Wood, G.H., Personal communication with Mr. T.J. Browder, The Ralph M. Parsons Company, Los Angeles, California, May 2, 1973. ESED, U.S. Environmental Protection Agency, Research Triangle Park, N.C.

16. Wood, G.H., Personal communication with Mr. J.B. Rinckhoff, Davy-Power Gas, Inc., Lakeland, Fla., May 7, 1973. ESED, U.S. Environmental Protection Agency, Research Triangle Park, N.C.

17. Farmer, J.R., Personal communication with Mr. J.B. Rinckhoff, Davy-Power Gas, Inc., Lakeland, Fla., February 27, 1973. ESED, U.S. Environmental Protection Agency, Research Triangle Park, N.C.

4.2 ELEMENTAL SULFUR PLANTS

4.2.1 Summary

Elemental sulfur plants have never achieved widespread use within the copper, lead or zinc smelting industry. However, in some cases they represent a viable alternative to the production of sulfuric acid from sulfur dioxide emissions contained in various smelter off-gases. Three companies have developed or are actively developing sulfur dioxide reduction technology: Allied Chemical Corp. and American Smelting and Refining Co./Phelps Dodge Corp. (ASARCO/PD) in the United States and Outokumpu Oy in Finland. Both Allied Chemical and Outokumpu have announced the commercial availability of their technology. ASARCO/PD, however, is still in the pilot plant stage of development.

The Allied Chemical and ASARCO/PD technology is generally applicable to the wide range of smelter off-gases. The Outokumpu technology, however, is restricted to flash smelting furnaces.

Of the various off-gases generated during the smelting of copper, lead or zinc, only those discharged by fluid-bed roasters and flash smelting furnaces are suitable for direct application of sulfur dioxide reduction technology. Off-gases discharged by other process units require concentration of the sulfur dioxide in a regenerative off-gas desulfurization system prior to reduction (see Section 4.3 - Scrubbing Systems).

There exists little data from which a quantitative conclusion can be drawn regarding the increase in sulfur dioxide emissions from elemental sulfur plants due to normal catalyst deterioration. However, review of the limited data available indicates that a 5-10% increase in

emissions is likely to occur between annual plant turnarounds as a result of catalyst deterioration.

Elemental sulfur plants normally achieve sulfur dioxide reduction efficiencies of 90%. The concentration of sulfur dioxide in the tail gases released to the atmosphere is normally in the range of 0.7-1.0%, if the plant operates on the off-gases from a fluid-bed roaster or flash smelting furnace. If the plant operates on a sulfur dioxide process gas produced by a regenerative off-gas desulfurization process, the concentration of sulfur dioxide in the tail gas released to the atmosphere is normally in the range of 2-5%.

A number of tail gas "clean-up" processes are applicable to elemental sulfur plants. The IFP process will reduce sulfur dioxide emission concentrations to 1000-2000 ppm. This would increase the overall sulfur dioxide reduction efficiency to about 98% if the off-gases from a fluid-bed roaster or flash smelting furnace are reduced, and to about 99.5% if a sulfur dioxide process gas produced by a regenerative off-gas desulfurization system is reduced.

The Wellman sulfur dioxide recovery process will reduce emission concentrations to less than 500 ppm. This would increase the overall sulfur dioxide reduction efficiency to about 99.5% if the off-gases from a fluid-bed roaster or flash smelting furnace are reduced, and to about 99.8-99.9% if a sulfur dioxide process gas produced by a regenerative off-gas desulfurization system is reduced.

4.2.2 General Discussion

Although elemental sulfur plants have never achieved widespread use within the copper, lead or zinc smelting industry, the recovery

of elemental sulfur from smelter off-gases has generated a great deal of interest, as evidenced by the number of elemental sulfur plants that have operated throughout the world during the past forty years. The failure of this technology to achieve widespread application in most cases has not been due to technical limitations, but a matter of economics where other alternatives have been available.

Essentially, elemental sulfur plants consist of two basic process steps. A fossil fuel is mixed with the gas stream to be reduced, frequently in the presence of a catalyst to promote the reduction reactions. A portion of the sulfur dioxide in the gas stream is reduced to elemental sulfur and hydrogen sulfide. The extent to which elemental sulfur and hydrogen sulfide are formed and sulfur dioxide remains in the gas stream depends on temperature, pressure and the carbon-to-hydrogen ratio in the fuel utilized as a reductant. With the reductant properly proportioned to the sulfur dioxide in the gas stream, the ratio of hydrogen sulfide to sulfur dioxide remaining will be approximately 2:1. Following reduction, a Claus catalyst is utilized to react the hydrogen sulfide formed with the remaining sulfur dioxide, producing elemental sulfur according to the familiar Claus reaction:

$$4H_2S + 2SO_2 \rightarrow 3S_2 + 4H_2O$$

The reductant employed in elemental sulfur plants can be coke, pulverized coal, fuel oil, natural gas or reformed natural gas.[1,2,3,4] Natural gas or fuel oil, however, is frequently the choice of reductant

where available, as a minimum of facilities for introduction and admixture into the gas stream to be reduced are required.

Currently, three companies have developed or are actively developing sulfur dioxide reduction technology for direct application to copper, lead or zinc smelters: Allied Chemical Corp. and American Smelting and Refining Co./Phelps Dodge Corp. (ASARCO/PD) in the United States and Outokumpu Oy in Finland. Although both Allied Chemical and Outokumpu have announced the commercial availability of their technologies,[3,5] ASARCO/PD is still in the pilot-plant stage of development.[4]

A process schematic of the Allied Chemical technology is presented in Figure 4-2.[3] Smelter off-gases are cleaned and purified to remove dust and other contaminants or introduced into a regenerative off-gas desulfurization process to concentrate the sulfur dioxide (see Section 4-3). Natural gas, which serves as the reductant, is then introduced into the process gas stream. Following heat exchange in a unique heat exchange system, the gas mixture enters the reduction reactor.[3,6,7]

The reduction of sulfur dioxide in the reduction reactor follows the reactions:

$$CH_4 + 2SO_2 \rightarrow 2H_2O + S_2 + CO_2$$

$$4CH_4 + 6SO_2 \rightarrow 4CO_2 + 4H_2O + 4H_2S + S_2$$

which take place in the presence of a proprietary catalyst developed by Allied. From 40 to 50% of the sulfur dioxide is reduced directly to elemental sulfur, depending on the concentration of sulfur dioxide in the inlet process gas stream. Control of the temperature in the reduction reactor and the ratio of natural gas to sulfur dioxide in the entering gas stream insures that the ratio of hydrogen sulfide to sulfur dioxide in the gases leaving the reactor will be 2:1, which is necessary for the

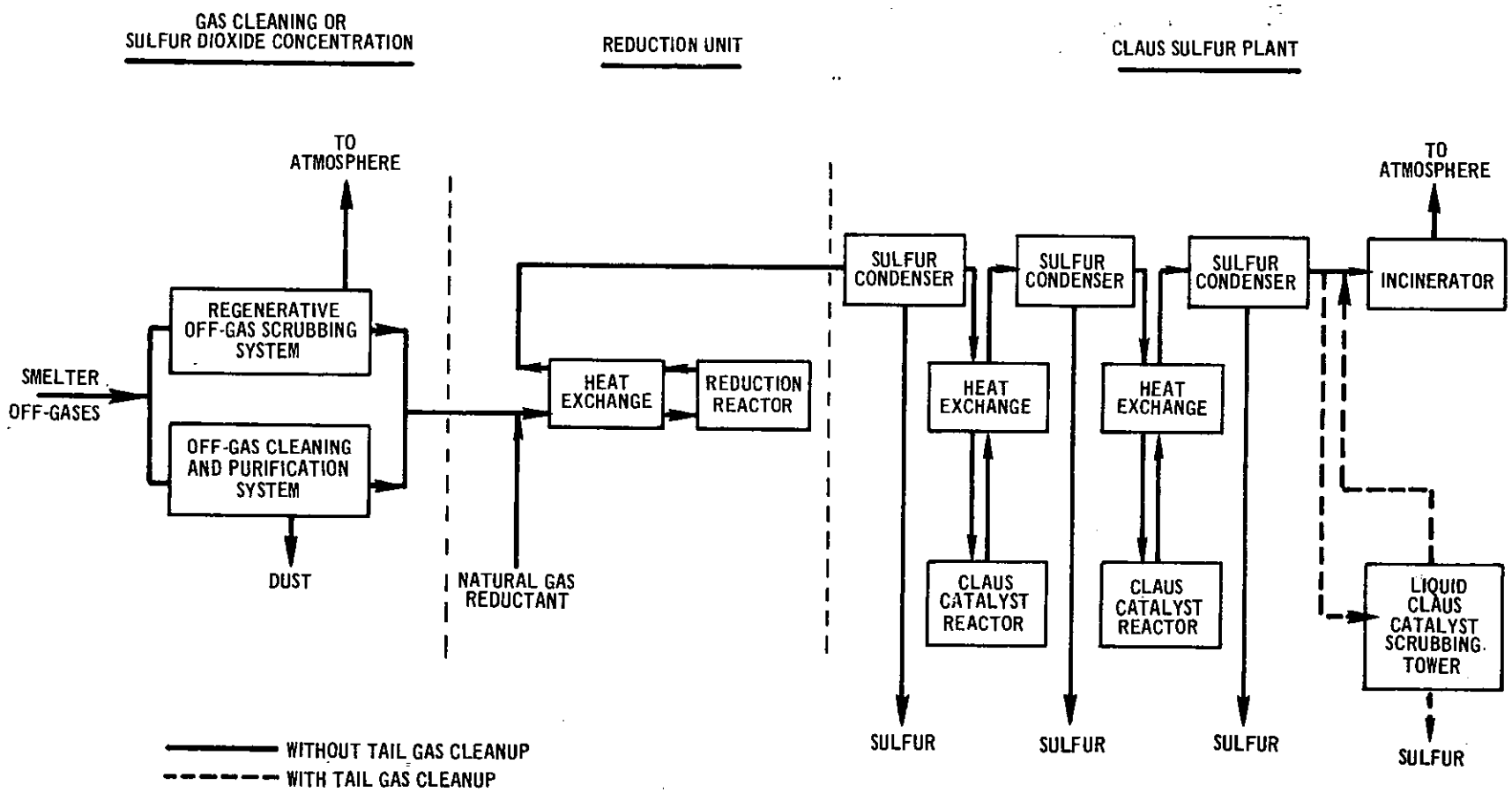

Figure 4-2. Allied Chemical Sulfur Dioxide Reduction Process.

subsequent Claus reactions.[3,6,7]

Following the catalytic reduction reactor, elemental sulfur is condensed from the process gases. The gases are then introduced into the first stage of a two-stage Claus reactor system in which hydrogen sulfide and sulfur dioxide react to form elemental sulfur. This sulfur is condensed from the gas stream as it leaves the first Claus reactor. Further conversion of hydrogen sulfide and sulfur dioxide to elemental sulfur takes place in the second Claus reactor. Following condensation of this sulfur from the process gases, the gases are combusted in an incinerator to convert residual hydrogen sulfide to sulfur dioxide before release to the atmosphere.[3,6,7]

The sulfur dioxide reduction technology under development by ASARCO/PD differs significantly from that developed by Allied Chemical. Reformed natural gas rather than natural gas is utilized as the reductant and this results in a number of differences in engineering design. The reformed natural gas is produced in a process developed by Phelps Dodge. An air/natural gas mixture is partially combusted in the presence of a catalyst to produce a gas stream containing a hydrogen plus carbon monoxide content of 48-50% (volume), according to the reaction:[4]

$$2CH_4 + O_2 \rightarrow 2CO + 4H_2$$

As in the Allied Chemical process, the ASARCO/PD process would likely require precleaning and purification of smelter off-gases, or concentration of the sulfur dioxide in a regenerative off-gas desulfurization process. Following precleaning or sulfur dioxide concentration, reformed natural gas is introduced into the process gas stream to be reduced. The gases then enter the reduction reactor where the following reactions take place in the presence of a catalyst:[4]

$$4CO + 2SO_2 \rightarrow 4CO_2 + S_2$$

$$10H_2 + 4SO_2 \rightarrow 2H_2S + 8H_2O + S_2$$

From 70 to 80% of the sulfur dioxide is reduced directly to elemental sulfur, depending on the concentration of sulfur dioxide in the inlet process gas stream. Control of the temperature in the reduction reactor and the ratio of reformed natural gas to sulfur dioxide in the entering gas stream insures that the ratio of hydrogen sulfide to sulfur dioxide in the gases leaving the reactor will be 2:1, as in the Allied Chemical process.[4]

Following the reduction reactor, elemental sulfur is condensed from the process gases. The gases are then introduced into a single-stage Claus reactor system. Hydrogen sulfide and sulfur dioxide remaining in the gases react to form elemental sulfur. Sulfur is condensed from the gas stream as it leaves the Claus reactor and the process gases are incinerated before release to the atmosphere.[4]

A process schematic of the Outokumpu sulfur dioxide reduction process is presented in Figure 4-3.[5] Although the sulfur dioxide reduction process developed by Allied Chemical or that under development by ASARCO/PD, is generally applicable to the wide range of smelter off-gas streams produced by copper, lead or zinc smelters, the Outokumpu process is limited to Outokumpu flash smelting furnaces. (Flash smelting was also developed by Outokumpu and is discussed in detail in Section 3.1 of this document.) Most of the discussion in this section, therefore, will concern the Allied Chemical and ASARCO/PD reduction processes, with brief references to the Outokumpu process.

As shown in Figure 4-3, this technology takes advantage of the unique design of the Outokumpu flash smelting furnace to eliminate the separate reduction reactor necessary in both the Allied Chemical and

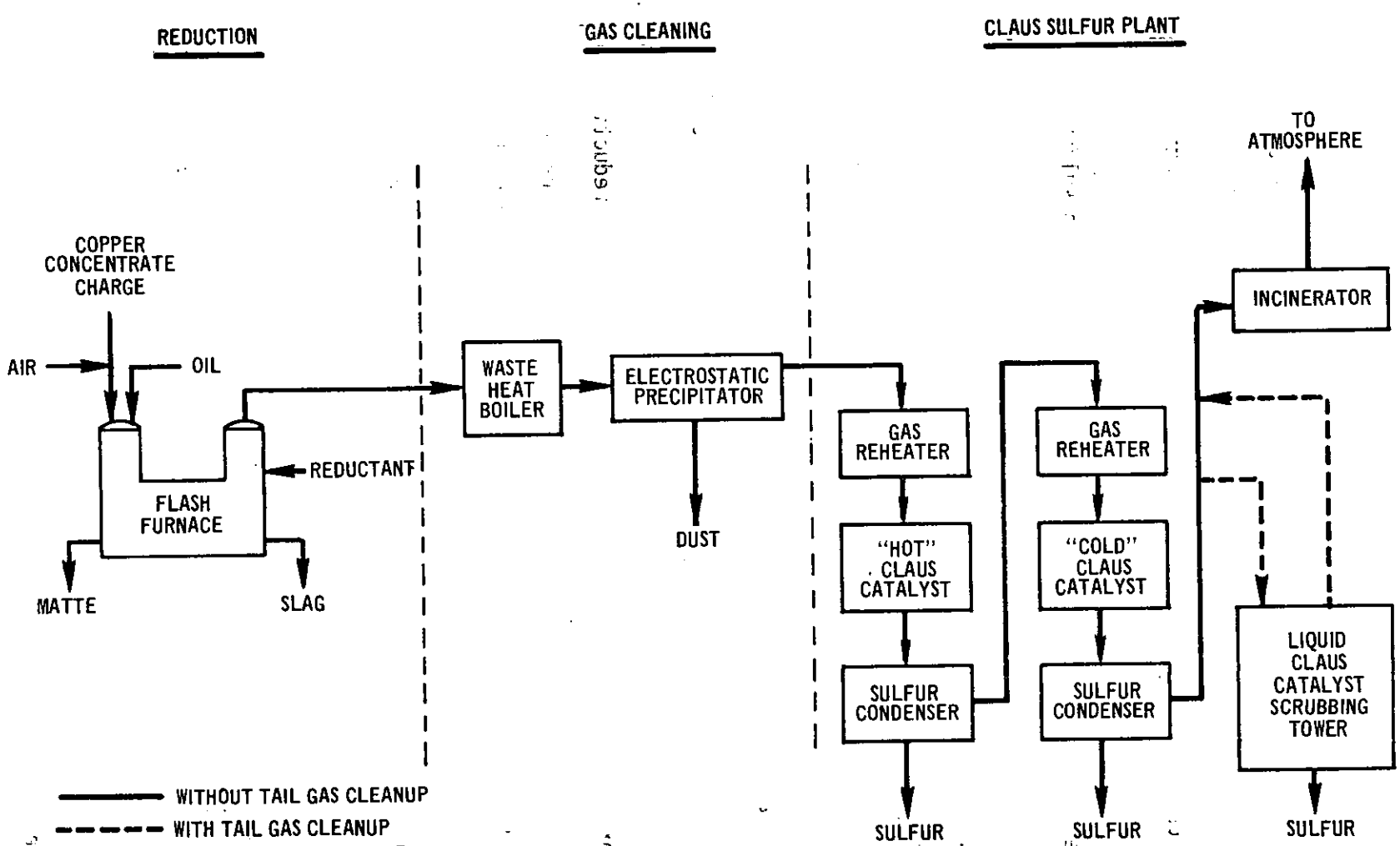

Figure 4-3. Outokumpu Sulfur Dioxide Reduction Process.

ASARCO/PD processes. Naphtha or pulverized coal serves as the reductant and is injected into the furnace off-gases in the uptake shaft of the flash smelting furnace. As in the reduction reactors associated with the Allied Chemical and ASARCO/PD processes, a major portion of the sulfur dioxide in the off-gases is reduced to elemental sulfur and hydrogen sulfide. However, the reduction reactions do not take place in the presence of a catalyst. At the high temperatures involved, Outokumpu indicates that a catalyst is not necessary to increase the kinetics of the various reduction reactions.[2] Control of the temperature in the furnace uptake shaft and the ratio of reductant to sulfur dioxide in the furnace off-gases insures that the ratio of hydrogen sulfide to sulfur dioxide remaining in the off-gases will be 2:1.[2,5]

Following reduction in the uptake shaft, the off-gases are cooled sufficiently in a waste heat boiler to remove entrained dusts in an electrostatic precipitator. The elemental sulfur formed in the furnace uptake shaft is maintained in a vapor state. From the electrostatic precipitator, the gases are reheated and introduced into the first stage of a two-stage Claus reactor system. Hydrogen sulfide and sulfur dioxide remaining in the furnace off-gases react to form elemental sulfur. The sulfur formed in this stage of the Claus reactor system and that formed in the uptake shaft of the flash furnace is then condensed from the gas stream. Normally, this represents about 85% of the elemental sulfur that is recovered.[8] The gases are then reheated and introduced to the second Claus reactor, where additional elemental sulfur is formed by the reaction of hydrogen sulfide with sulfur dioxide. Following the second Claus reactor stage, sulfur is condensed from the process gases. The gases are then incinerated before release to the atmosphere.[2,5]

In each of these sulfur dioxide reduction technologies, the reducing agent is the largest single element of operating cost associated with

each process.[3,4] Consequently, minimizing the oxygen content in the gas stream to be reduced is of major importance, since each volume of oxygen consumes as much reductant as a volume of sulfur dioxide.

In addition, as is generally true for any sulfur dioxide emission control system, there is a point below which, with lower sulfur dioxide concentrations, it becomes more economical to concentrate the sulfur dioxide prior to reduction, rather than reduce the entire off-gas stream. Although this point will vary depending on a large number of factors, in general, if the combined sulfur dioxide and oxygen content in an off-gas stream is 2% (volume) or more and the ratio of sulfur dioxide to oxygen is 3 or more, direct reduction of the entire off-gas stream to produce elemental sulfur could be a viable approach to controlling sulfur dioxide emissions.[9]

However, the direct application of sulfur dioxide reduction technology to various gas streams may only start to become attractive in a few specific situations where the sulfur dioxide concentration is 4-5% or more and where the oxygen content is quite low.[3] In most cases, the direct application of this technology is not likely to become sufficiently attractive to achieve widespread utilization, unless the concentration of sulfur dioxide in the gas stream is 10-15% or more and the oxygen content is 1-3% or less.[4]

The direct reduction of various off-gases, by means of the Allied Chemical process, which contain less than 1% oxygen and 10-15% sulfur dioxide may require supplementary heat to maintain a thermal balance around the catalytic reduction reactor, depending on their inlet temperature. In all but a few cases, supplementary preheating of the gases before introduction into the reduction reactor will be necessary to maintain optimum temperature profiles in the reactor for direct reduction of

off-gases containing less than 1% oxygen and 5% sulfur dioxide.[9] Little or no auxiliary fuel may be required to provide this supplementary heat, however, as a result of the necessity to incinerate the tail gases before release to the atmosphere. Heat exchange of the hot incinerator tail gases with the inlet off-gases ahead of the reduction reactor provides most of the supplementary heat requirements.[3,10]

Direct reduction of off-gases with increasing oxygen content, on the other hand, increases the heat load that must be dissipated from the reduction reactor circuit. This can be a substantial increase since at the temperatures involved, the heat released by the reduction of oxygen is from five to ten times as great as that released by the reduction of sulfur dioxide.[11] Thus, for both technological (increased heat load) and economical (increased reductant consumption) reasons, direct reduction of off-gases containing more than 5% oxygen is normally not attractive.[10]

Consequently, of the various off-gas streams generated during the smelting of copper, lead or zinc concentrates, only those discharged by fluid-bed roasters (12-14% sulfur dioxide/1-3% oxygen) and flash smelting furnaces (10-14% sulfur dioxide/1-3% oxygen) are suitable for the direct application of sulfur dioxide reduction technology.[4]

Although there are economic constraints to the direct reduction of off-gases containing low concentrations of sulfur dioxide, there are no constraints to the direct reduction of off-gases containing high concentrations of sulfur dioxide. In this respect sulfur dioxide reduction processes are quite versatile and can be applied directly to off-gases of even 100% sulfur dioxide.[3,4] Thus, in those cases where the oxygen content of an off-gas stream is too high or the sulfur dioxide content too low for direct reduction,

either the Allied Chemical or ASARCO/PD reduction process could be combined with a regenerative off-gas desulfurization process (see Section 4.3). Such a process, utilizing dimethylaniline (DMA) or sodium sulfite-bisulfite as the sulfur dioxide absorbent, could be used to recover the sulfur dioxide as a process gas for direct reduction to elemental sulfur.[3,4] In this manner, elemental sulfur plants could be utilized to control the emissions of sulfur dioxide contained in each of the various off-gas streams generated during the smelting of copper, lead or zinc concentrates.

As with sulfuric acid plants, elemental sulfur plants should operate on off-gas streams of uniform flow rate and sulfur dioxide and oxygen concentration. However, those individual process units to which elemental sulfur plants are directly applicable, such as fluid-bed roasters and flash smelting furnaces, are "steady-state" operations and discharge off-gas streams with these characteristics. Other off-gas streams such as those discharged by sintering machines or copper converters require pretreatment in a regenerative off-gas desulfurization process due to their high oxygen content. In each of these cases, the off-gas desulfurization process could be designed to include sufficient surge capacity for the sulfur dioxide recovered, to eliminate fluctuations in the process gas stream to the elemental sulfur plant.

Also, as with sulfuric acid plants, the presence of high levels of solid or gaseous contaminants in smelter off-gases could present difficulties to the production of elemental sulfur. In most cases, however, these contaminants can be removed from the gas stream prior to sulfur dioxide reduction. Their removal and reclamation presents some economic recovery, while preventing damage to the elemental sulfur plant or contamination of the

sulfur product. Generally, the off-gases from smelting operations contain varying amounts of entrained dusts as well as fumes formed by vaporization and subsequent condensation of volatile components, such as arsenic, antimony, cadmium, mercury, etc., in addition to copper, lead and zinc.

Currently, most of the dust and fume is normally recovered in dry-type collectors, such as cyclones, electrostatic precipitators and baghouses, for its economic value.[12] Additional cleaning and purification is required, however, to remove residual quantities to protect the elemental sulfur plant. The major problems presented by these residual quantities include plugging of the catalyst beds, deactivation of the catalyst and contamination of the product sulfur. Anticipation of the potential magnitude of these problems, followed by installation of adequate gas cleaning and purification systems, will limit the problems to tolerable levels in most cases.

In general, the same degree of off-gas cleaning and purification is required for Allied Chemical's elemental sulfur process as is required for sulfuric acid plants.[6] The same is likely to be true for the ASARCO/PD process under development. As a result, Table 4-1 presented in Section 4.1 - Sulfuric Acid Plants, which presents estimates of maximum levels of impurities contained in smelter off-gases that can be tolerated by sulfuric acid plants,[13] could also be applied to elemental sulfur plants.

Table 4-1 also presents the estimated upper level of impurities that can be removed by typical gas purification systems with prior coarse dust removal. Although complete removal of contaminants is not practical,

99.5 to 99.9% overall removal is considered to be attainable.[12] For severe cases of off-gas contamination, more elaborate cleaning systems must be designed specifically for the problem contaminants. The details vary with the contaminants, but the general solution includes the use of more efficient dust collectors and scrubbing of the gases with liquids which absorb the contaminants.

It should be noted, however, that the problems presented by off-gas contaminants will likely be more severe where the Outokumpu process is utilized for the production of sulfur rather than the Allied Chemical or ASARCO/PD processes. In the Outokumpu process, there is no precleaning or purification of the flash smelting furnace off-gases before reduction. Dust and fumes are removed in an electrostatic precipitator following reduction. Although coarse dust and fume particulates may be completely removed, some fine dust and particulates will pass through the precipitator and deposit on the catalyst in the first Claus reactor stage or in the sulfur condensed following this reactor stage.

The Allied Chemical process, on the other hand, incorporates off-gas precleaning before the reduction reactor. This permits the use of special off-gas purification equipment for specific contaminants, if necessary, to minimize both catalyst and product sulfur contamination. The same is true with the ASARCO/PD process. Consequently, problems of catalyst fouling and deactivation or product sulfur contamination will undoubtedly be greater in the Outokumpu process than in the Allied Chemical or ASARCO/PD process.

It should also be noted, however, that the problems presented by off-gas contaminants to the production of elemental sulfur will be of concern only in those cases where sulfur dioxide reduction technology is utilized directly on off-gas streams from fluid-bed roasters and flash smelting

furnaces. As discussed earlier, the production of sulfur from off-gases discharged by sintering machines and copper converters will require prior concentration of the sulfur dioxide in a regenerative off-gas desulfurization process. The desulfurization process will also serve to eliminate the contaminants from the sulfur dioxide process gases subsequently reduced to elemental sulfur. Thus, considering all the various off-gas streams generated during the smelting of copper, lead or zinc concentrates, the presence of contaminants in these off-gases is likely to present fewer problems to the production of elemental sulfur than to the production of sulfuric acid.

Although it is widely accepted that smelter off-gas contaminants can lead to plugging of catalyst beds or partial deactivation of catalysts, there exist no data from which a quantitative conclusion can be drawn regarding the increase in sulfur dioxide emissions from elemental sulfur plants due to normal catalyst deterioration.

During a recent two-year operation of an Allied Chemical elemental sulfur plant on a fluid-bed roaster, however, Allied reports no loss of catalyst activity in the catalytic reduction reactor.[10] Allied replaced the original bauxite Claus catalyst following the reduction reactor with a high-alumina Claus catalyst during this operation.[7] As a result, similar data on Claus catalyst deterioration is not available, although Allied indicates that deterioration of this catalyst should be no greater than that experienced in Claus sulfur plants operated in the petroleum industry.[10]

There is not a great deal of data available concerning normal catalyst deterioration experienced in Claus sulfur plants operated in the petroleum industry; however, the literature indicates that a decrease in sulfur conversion efficiency of 0.5% is not uncommon between annual Claus plant

turnarounds.[13]

Based on this information, assuming no increase in emissions as a result of catalyst deterioration in the catalytic reduction reactor and assuming a decrease in sulfur conversion efficiency of 0.5% in the Claus reactor system, an elemental sulfur plant operating at a nominal 90% sulfur dioxide reduction efficiency would experience only a 5% increase in sulfur dioxide emissions between annual turnarounds due to catalyst deterioration. An elemental sulfur plant operating at a nominal 95% sulfur dioxide reduction efficiency would experience a 10% increase in sulfur dioxide emissions.

During the reduction of sulfur dioxide in the reduction reactor, small amounts of carbonyl sulfide (COS) and carbon disulfide (CS_2) are formed. The actual quantities formed depend on a number of factors such as temperature, type of reductant used and selectivity of the catalyst toward promoting the main reduction reactions, if a catalyst is utilized. Thus, the formation of carbonyl sulfide and carbon disulfide will vary depending on the sulfur dioxide reduction technology: Allied Chemical, ASARCO/PD or Outokumpu.

Although carbonyl sulfide and carbon disulfide normally pass through the Claus reactors with only a small portion converted to carbon dioxide and elemental sulfur, they are oxidized to sulfur dioxide in the tail gas incinerator before release to the atmosphere. As a result, their formation lowers the overall sulfur dioxide reduction efficiency and increases the sulfur dioxide emission concentrations released to the atmosphere.

Minimizing the contribution of carbonyl sulfide and carbon disulfide to sulfur dioxide emissions normally entails utilization of the newer Claus catalysts which have been developed, such as the cobalt-molybdate on alumina catalysts. These catalysts promote the conversion of carbonyl sulfide and carbon disulfide to hydrogen sulfide or elemental sulfur and carbon dioxide. Both the bauxite or activated alumina catalysts, which are normally utilized, promote this conversion initially, but their activity declines with catalyst ageing. The cobalt-molybdate on alumina catalysts, however, maintain their activity for a year or more.[14]

This catalyst should be placed in the middle or lower portion of the first Claus reactor catalyst bed. This inhibits surface deactivation of the catalyst, while achieving the early conversion of carbonyl sulfide and carbon disulfide. Higher Claus reactor temperatures are necessary for the conversion of carbonyl sulfide and carbon disulfide and this adversely affects the equilibrium conversions of the Claus reaction. The loss of conversion efficiency in the first Claus reactor can normally be compensated for, however, in the second Claus reactor.[14]

Although sulfuric acid plant vendors normally report either or both maximum sulfur dioxide emission concentration and minimum sulfur dioxide conversion efficiency to indicate the air pollution control performance of their technology, elemental sulfur plant vendors normally report only minimum sulfur dioxide reduction efficiency. Sulfuric acid plants are designed to operate on gas streams containing from 3-1/2% to 9% sulfur dioxide, while elemental sulfur plants can be designed to operate on gas streams containing from

less than 5% up to 100% sulfur dioxide. Consequently, the conversion efficiency and thus the emission concentrations released to the atmosphere by a sulfuric acid plant remain relatively constant due to the narrow range of inlet gas sulfur dioxide concentrations that are processed. In an elemental sulfur plant, the sulfur dioxide reduction efficiency remains relatively constant over the wide range of inlet gas sulfur dioxide concentrations that can be processed. As a result, the emission concentrations released to the atmosphere depend on the inlet gas concentration and can vary substantially.

Each of the three sulfur dioxide reduction technologies discussed normally achieve sulfur dioxide reduction efficiencies of about 90% in practice,[2,3,4,5] although theoretical reduction efficiencies approaching 95% under optimum conditions can be calculated.[4,10] Reduction efficiencies are a limited function of inlet sulfur dioxide concentration. This factor is not significant in most cases, however, since the increase in reduction efficiency as a result of reducing gases of 100% sulfur dioxide over reducing gases of 10-15% sulfur dioxide is only about 1%.[4,10]

Assuming a 90% reduction efficiency, the sulfur dioxide emission concentrations released to the atmosphere from elemental sulfur plants utilized to control emissions from copper, lead or zinc smelters can be estimated. As discussed earlier, elemental sulfur plants are directly applicable to fluid-bed roasters or flash smelting furnaces. The control of other smelting operations, such as sintering machines and copper converters, requires a regenerative

off-gas desulfurization process to concentrate the sulfur dioxide prior to reduction. Thus, elemental sulfur plants will most likely operate on off-gases of 10-15% or 80-100% sulfur dioxide.

On this basis, if the Allied Chemical process were utilized for direct reduction of the off-gases from a fluid-bed roaster or flash smelting furnace, the concentration of sulfur dioxide emissions in the tail gases following incineration would be in the range of 0.7-1.0%.[3,15] If this process were utilized for reduction of a concentrated sulfur dioxide process gas produced by a regnerative off-gas desulfurization process, the concentration of sulfur dioxide emissions in the tail gases following incineration would be in the range of 4.5-5.0%.[15]

If the ASARCO/PD process were utilized rather than the Allied Chemical process, the concentration of sulfur dioxide emissions in the tail gases following incineration would be in the range of 0.7% and 2.0%, respectively.[16] The lower emission concentrations released to the atmosphere by the ASARCO/PD process is due to the use of reformed natural gas as the reductant rather than natural gas. The overall sulfur dioxide reduction efficiency is essentially the same in both processes; however, for each volume of natural gas required in the Allied process, about six and a half volumes of reformed natural gas are required in the ASARCO/PD process. Thus, the emission concentrations are lower.

If the Outokumpu process were utilized for direct reduction of the off-gases discharged by a flash smelting furnace, rather than the Allied Chemical or ASARCO/PD processes, the concentration of sulfur dioxide emissions in the tail gases following incineration would be in the range of 0.8-1.0%.[8]

In comparison with sulfuric acid plants, therefore, elemental sulfur plants, as they are conventionally designed and operated, achieve lower emission control efficiencies and result in higher sulfur dioxide emission concentrations released to the atmosphere. There exist, however, a number of tail gas "clean-up" processes which are applicable to elemental sulfur plants. If utilized, some of these processes would increase the overall emission control efficiency and decrease the sulfur dioxide emission concentrations released to the atmosphere to essentially the same levels achieved by sulfuric acid plants. Table 4-2 is a summary of these tail gas "clean-up" processes which was recently presented in the literature.[17]

To date, none of these processes have been applied to elemental sulfur plants operating on copper, lead or zinc smelter off-gases although a number have been applied to the tail gases from Claus sulfur plants operated in the petroleum industry. Since elemental sulfur plants designed to process smelter off-gases are essentially Claus sulfur plants preceded by a reduction reactor, most of these tail gas "clean-up" processes are directly applicable to elemental sulfur plants.

Of the processes listed in Table 4-2, the two that have achieved the widest application are the IFP process developed by the Institut Francais du Petrole and the Wellman process developed by Wellman Power Gas (now Davy Power Gas). The IFP process is an add-on process (as shown in Figures 4-2 and 4-3) which extends the Claus reaction between sulfur dioxide and hydrogen sulfide to increase the overall conversion of sulfur dioxide to elemental sulfur.

Table 4-2. ELEMENTAL SULFUR PLANT TAIL GAS "CLEAN-UP" PROCESSES[1-7]

Name	Developer	Operation	Abstract	Extraneous process feed streams required	Sulfur removal	Product
Beavon Sulfur Removal Process	Ralph M. Parsons & Union Oil Co. of California	Los Angeles refinery, Union Oil Co. of California	Tail gas from Claus sulfur recovery plant is catalytically hydrotreated at atmospheric pressure. All sulfur compounds are converted to H_2S which is then processed through a Stretford unit.	Fuel gas and air	Removal to 250 ppm SO_2 or less	Sulfur
CleanAir Sulfur Process	J. F. Pritchard & Co. and Texas Gulf Sulfur Co.	Pilot plant work, Okotoks plant, Texas Gulf Sulfur Co. Philadelphia refinery, Gulf Oil Co.	Three stage process: Stage 1 converts essentially all SO_2 to sulfur with some conversion of H_2S to sulfur. Stage 2 converts remaining hydrogen sulfide to sulfur in a Stretford unit. Stage 3 is a polishing unit to reduce the COS and CS_2 level in the tail gas which is normally installed between the Claus plant and Stage 1.	Fuel gas and air	Removal to 250 ppm SO_2 or less	Sulfur
IFP Sulfur Recovery Process	Institut Francais du Petrole	Demonstration plant, Lone Pine Creek plant, Hudson's Bay Oil & Gas Co. Nippon Petroleum Refining Co., Japan Idemitsu Oil Co., Japan Kyokutoh Oil Co., Japan Showa Oil Co., Japan	Tail gas from a Claus unit is fed into an absorber, where the Claus reaction occurs in a solvent in the presence of a catalyst. Sulfur is produced in the molten state directly from the base of the absorber. No conversion of COS and CS_2 is claimed.	None	SO_2 removal to 1,000 ppm	Sulfur
Shell's Flue Gas Desulfurization Process	Koninklijke/Shell Laboratorium, the Netherlands	Pilot plant work, Pernis, the Netherlands Yokkaichi refinery of Showa-Hokkaichi Oil Co.	Dry process for removing SO_2 from flue gas from the incinerator in a parallel passage solid bed swing reactor. This is a cyclic process in which a copper on alumina acceptor is used for acceptance and regeneration of the SO_2 at 750° F. A purge gas stream to separate the oxidizing and reducing atmospheres is required for both the acceptance and regeneration steps. SO_2 concentration step is required.	Reducing gas H_2, H_2/CO mixtures, or light paraffinic hydrocarbons	90% SO_2 removal	SO_2 formed is recycled through a Claus unit
SNPA-Sulfuric Acid Process	SNPA and Haldor Topsoe	SNPA sulfur plant, Lacq field	Tail gas is incinerated transforming all sulfur compounds to SO_2. The gas is then passed through a converter containing a vanadium oxide-based catalyst. SO_2 is oxidized to SO_3 with a 90% yield. The hot converter gas exchanges heat in the concentrator, and then goes through an absorber. Dilute acid produced is then sent to a concentrator in which the heat content of gas from the convertor evaporates part of the water from the acid.	Fuel gas and air	90% SO_2 conversion	94% sulfuric acid
Sulfreen Process	SNPA and Lurgi Gesellschaften	SNPA sulfur plant, Lacq field Aquitaine's Ram River sulfur plant, Rocky Mountain House, Alberta	Activated carbon bed catalyzes the Claus reaction between the H_2S and SO_2 in tail gas and adsorbs elemental sulfur formed. Inert regeneration gas is used at elevated temperatures to desorb the sulfur. Bed is then cooled and placed back on reaction cycle. No conversion of COS and CS_2 is claimed.	Inert gas for regeneration	75% of sulfur in the Claus plant tail gas	Sulfur
Wellman-SO_2 Recovery Process	Wellman Power Gas	Olin Chemical Co., Paulsboro, N. J. Japanese Synthetic Rubber Co., Chiba, Japan Toa Nenryo Kogyo refinery, Kanagawa, Japan Standard Oil refinery, El Segundo, Calif. Allied Chemical Co. sulfuric acid plant, Chicago Olin Corp. sulfuric acid plant, Curtis Bay, Md.	Sulfur plant incinerator effluent is cooled to 150° F and contacted with a sodium sulfite solution. SO_2 in the gas reacts to form sodium bisulfite. The gas can be stripped to low concentrations of SO_2. Alternative regeneration schemes have been used. In one plan, the SO_2 rich solution from the absorber flows into an evaporator/crystallizer where the bisulfite decomposes to SO_2 and the sodium sulfite crystals precipitate. Sulfite crystals are redissolved to be recirculated. The regenerator overhead is cooled and SO_2 and water vapor recycled to Claus plant. Sodium hydroxide chemical makeup is required.	None	SO_2 removal to 100 ppm	60% SO_2 and 40% water vapor

The tail gases from the final Claus reactor stage in an elemental sulfur plant following sulfur condensation are fed directly to the IFP reactor, which is a packed column. The gases enter near the bottom of the column and, as they rise through the column, are contacted countercurrently by a liquid stream containing a Claus catalyst dissolved in a solvent. The temperature is maintained between 250-300°F, and theoretical conversions of sulfur dioxide and hydrogen sulfide to elemental sulfur approach 100% due to continuous elimination of the reaction products, water and sulfur, from the liquid. The water is vaporized and enters the gas stream, and the catalyst solvent has a limited solubility for sulfur.[18,19]

The sulfur formed in the IFP reactor separates from the solvent and descends through the column, collecting in a sump at the bottom of the column as a separate liquid phase. The sulfur is continually withdrawn from the sump and is of high quality comparable to that obtained from the elemental sulfur plant.[18,19]

The IFP process is capable of reducing sulfur dioxide emission concentrations to the range of 1000-2000 ppm.[17,18,19] This would increase the overall sulfur dioxide reduction efficiency of an elemental sulfur plant operating on the off-gases from a fluid-bed roaster or a flash smelting furnace to about 98%. If applied to an elemental sulfur plant operating on a concentrated sulfur dioxide process gas stream produced by a regenerative off-gas desulfurization process, the overall sulfur dioxide reduction efficiency would be increased to about 99.5%.

Thus, the application of the IFP process to an elemental sulfur plant would reduce sulfur dioxide emission concentrations to the level

normally associated with single-stage sulfuric acid plants. In addition, the overall emission control efficiency would be increased to a level somewhat above that normally associated with a single-stage sulfuric acid plant, if the elemental sulfur plant reduced off-gas from a fluid-bed roaster or a flash smelting furnace. If the elemental sulfur plant reduced a concentrated sulfur dioxide process gas stream, then the overall emission control efficiency would be increased to a level somewhat below that normally associated with a double-stage sulfuric acid plant.

The Wellman process is discussed in Section 4.3 - Scrubbing Systems. This process is a regenerative off-gas desulfurization process utilizing a sodium sulfite-bisulfite solution as the sulfur dioxide absorbing medium. If the process were applied to the tail gases from an elemental sulfur plant following incineration, the sulfur dioxide emission concentrations could be reduced to less than 500 ppm (see Section 4.3). This would increase the overall sulfur dioxide reduction efficiency of an elemental sulfur plant operating on the off-gases from a fluid-bed roaster or flash smelting furnace to about 99.5%. If applied to an elemental sulfur plant operating on a concentrated sulfur dioxide process gas stream, the overall sulfur dioxide reduction efficiency would increase to about 99.8-99.9%.

Thus, the application of the Wellman process to an elemental sulfur plant would reduce sulfur dioxide emission concentrations to the level normally associated with double-stage sulfuric acid plants. In addition, the overall emission control efficiency would be increased to a level approaching or exceeding that normally

associated with double-stage sulfuric acid plants.

It should be noted, however, that the application of an off-gas regenerative desulfurization process, such as the Wellman process, to the tail gases discharged by an elemental sulfur plant would involve a "grass-roots" installation of such a process only where the elemental sulfur plant operated directly on off-gases from a fluid-bed roaster or flash smelting furnace. The reduction of sulfur dioxide emissions contained in other smelter off-gases to elemental sulfur would require concentration of the sulfur dioxide prior to reduction. In these cases the tail gas discharged by the elemental sulfur plant could be recycled to the off-gas desulfurization process installed upstream of the elemental sulfur plant, rather than requiring the installation of separate facilities to "clean-up" the tail gas.

The use of elemental sulfur plants to control sulfur dioxide emissions from copper, lead or zinc smelters is commercially available technology. Although the ASARCO/PD process is still under development, both the Allied Chemical and Outokumpu processes have been commercially demonstrated.

The Allied Chemical process was successfully operated over a two-year period from late 1970 through 1972, at the nickel-iron reduction plant of Falconbridge Nickel Mines, Ltd., in Sudbury, Ontario, Canada. This prototype plant reduced the sulfur dioxide emissions contained in the off-gases discharged by a fluid-bed roaster to elemental sulfur. The fluid-bed roaster was designed to roast some 500,000 tons per year of a nickel containing pyrrhotite concentrate. The off-

gases contained 12-13% sulfur dioxide and 1-1.5% oxygen and the elemental sulfur plant achieved a 90% reduction of the sulfur dioxide in the off-gases to elemental sulfur. Some 500 long tons per day of elemental sulfur was produced when the plant was operated at full capacity.[3,6,7]

Although the elemental sulfur plant was shut down in January 1973, this was not the result of any process or mechanical operating problems within the elemental sulfur plant. The Falconbridge nickel-iron reduction plant consisted basically of roasting nickel pyrrhotite concentrates to produce an iron oxide calcine, pelletizing of the calcine, hardening of the pellets and reduction of the hardened pellets in a kiln to produce metallic iron-nickel pellets. However, it was never possible to achieve operation of the reduction kiln at more than two-thirds of the design throughput rate, nor to maintain steady operation for any significant period of time. As a result, this created unfavorable economics for the venture, leading to the shut-down of the plant in January 1973. Consequently, the sulfur plant was shut down because it was no longer needed.[7,20]

The adaptability of the Allied Chemical process to a concentrated sulfur dioxide process gas will be commercially demonstrated at the D.H. Mitchell Station of the Northern Indiana Public Service Co. in Gary, Indiana. The elemental sulfur plant will be combined with the Wellman sulfur dioxide recovery process. The Wellman process will produce some 500 cfm of process gas containing 85% sulfur dioxide, which will be reduced to elemental sulfur in the Allied process. According to EPA information as of mid-1973 this facility is scheduled for start-up in July 1974.[21]

The Outokumpu process has been in commercial operation on an Outokumpu flash smelting furnace located in Kokkola, Finland, since 1962.[5] Although this furnace processes a pyrite concentrate, the characteristics of the off-gases generated in the furnace are essentially the same as those generated in a copper flash smelting furnace. The concentration of sulfur dioxide in the furnace uptake shaft prior to reduction is in the range of 12-15%.[8] Thus, this prototype installation, which recovers about 300 tons/day of elemental sulfur, represents commercial demonstration of the Outokumpu sulfur dioxide reduction technology.[8]

Although the Kokkola installation has been in operation for ten years, as of mid-1973 this remained the only installation utilizing this technology, which was in operation. Two installations, however, were under construction with plans to incorporate Outokumpu's elemental sulfur technology. Bamangwato Concessions, Ltd., which is 25% owned by American Metals Climax (AMAX), was to start up a nickel flash smelting furnace in Botswana, Africa, in October 1973. The off-gases from this furnace were to be reduced by the Outokumpu process to recover elemental sulfur.[8] Also, the Phelps Dodge Corp. currently has under construction a "grass-roots" copper smelter at Tyrone, New Mexico, which will incorporate Outokumpu flash smelting technology and sulfur reduction technology.[22] This installation is scheduled to start up in 1974.

REFERENCES FOR SECTION 4.2

1. Systems Study for Control of Emissions - Primary Nonferrous Smelting Industry, Arthur G. McKee & Co., Western Knapp Engineering Division, Public Health Service, U.S. Dept. of Health, Education and Welfare, Contract No. PH 86-65-85, June 1969.

2. R. Malmstrom and T. Tuominen, High Temperature Reduction of Sulfur Dioxide Gases with Pulverized Coal, Paper presented at the Advances in Extractive Metallurgy and Refining Meeting - Institution of Mining and Metallurgy, London, October 1971.

3. W.D. Hunter, Jr., Application of SO_2 Reduction in Stack Gas Desulfurization Systems, Paper presented at the Flue Gas Desulfurization Symposium, New Orleans, Louisiana, May 1973.

4. J.M. Henderson, Reduction of SO_2 to Sulfur, Mining Congress Journal, March 1973, pp. 59-62.

5. K.B. Murdeu, Outokumpu Flash Smelting and Sulphur Recovery, Paper presented at Annual AIME Meeting, San Francisco, California, February 1972.

6. J.P. Wright, Reduction of Stack Gas SO_2 to Elemental Sulfur, Sulphur, No. 100, May/June 1972, pp. 72-75.

7. W.D. Hunter and A.W. Michner, New Elemental Sulphur Recovery System Establishes Ability to Handle Roaster Gases, Engineering and Mining Journal, June 1973, pp. 117-119.

8. Personal communication - F.L. Porter (EPA) with E. Löytymäki (Outokumpu), Outokumpu Oy, Helsinki, Finland, July 26, 1973.

9. W.D. Hunter and J.C. Fedoruk, Application of Technology for SO_2 Reduction to Sulfur in Emission Control Systems, Paper presented at Antinguinamento '72, Milan Fair Center, Milan, Italy, November, 1972.

10. Personal communication - W.D. Hunter (Allied Chemical) with F.L. Porter (EPA), Allied Chemical Corp., Morristown, N.J., July 10, 1973.

11. Personal communication - J.M. Henderson (ASARCO) letter to D.F. Walters (EPA), November 24, 1972.

12. A.M. Phillips, The World's Most Complex Metallurgy (Copper, Lead and Zinc), Trans. Met. Soc. AIME, Vol. 224, No. 4, August 1962, pp. 657-668.

13. C.B. Barry, Reduce Claus Sulfur Emissions, Hydrocarbon Processing, April 1972, pp. 102-106.

14. H.S. Bryant, Environment Needs Guide Refinery Sulfur Recovery, Oil and Gas Journal, March 27, 1973, pp. 70-76.

15. Sulfur dioxide emission calculations based on: fluid-bed roaster off-gases - 10-15% SO_2/2% O_2, concentrated sulfur dioxide process gas - 80-100% SO_2/nil O_2; 90% reduction of SO_2 tp S_2; reductant consumption of 0.68 mole CH_4/mole SO_2 in fluid-bed roaster off-gases and 0.57 mole CH_4/mole SO_2 in concentrates sulfur dioxide process gas; 25% increase in tail gas volume due to incineration.

16. Sulfur dioxide emission calculations based on: fluid-bed roaster Off-gases - 10-15% SO_2/2% O_2, concentrated sulfur dioxide process gas - 80-100% SO_2/nil O_2; 90% reduction of SO_2 to S_2; reductant and air consumption of 0.88 mole CH_4 + 2.64 mole air/mole SO_2 in fluid-bed roaster off-gases and 0.73 mole CH_4 + 2.19 mole air/ mole SO_2 in concentrated sulfur dioxide process gas; 25% increase in tail gas volume due to incineration.

17. C.B. Barry, Reduce Claus Sulfur Emission; Hydrocarbon Processing, April 1972, pp. 102-106.

18. M. Hirai, R. Odello and H. Shimamura, Solvent/Catalyst Mixture Desulfurizes Claus Tail Gas; Chemical Engineering, April 17, 1972, pp. 77-79.

19. P. Bonnifay, R. Dutriau, S. Frankowiak and A. Deschamps, Partial and Total Sulfur Recovery, Chemical Engineering Progress, Vol. 68, No. 8, August 1972, pp. 51-52.

20. Anon., Longer-Term Hope for Falconbridge Refinery, The Northern Miner, Toronto, Ontario, Canada, May 3, 1973.

21. Anon., Combined SO_2 Removal Process Set for Testing, Oil and Gas Journal, February 5, 1972, pp. 76-77.

22. Anon., Engineering and Mining Journal, Vol. 173, No. 7, July 1972, p. 134.

4.3 SCRUBBING SYSTEMS

Historically, there has been little economic incentive to desulfurize process off-gases containing sulfur dioxide in concentrations ranging from 0.05 to 3.5 percent. Process off-gases from fossil-fuel-fired power plants, refinery sulfur recovery plants, sulfuric acid plants, and certain smelter process equipment such as reverberatory furnaces and sintering machines are included in this category. Until recently, there has been little demonstrated control of sulfur dioxide from these sources, except in areas affected by severe air pollution problems. The approach utilized to control sulfur dioxide in most instances has been to employ scrubbing systems to chemically react the SO_2 with liquid phase absorbents to yield sulfur compounds that can be either discarded, reprocessed, or sold directly as obtained for use in other industries. The term "scrubbing systems" has come into common usage when describing such chemical processes since each of the systems requires the use of process equipment, i.e., a scrubber, to promote gas phase mass transfer and/or chemical reaction rate.

There are three major variations of scrubbing systems where the reactant is added to the scrubbing media as indicated below:

1. Non-cyclic system - This open-loop type of system has a throwaway product. The liquor stream has only one pass through the scrubber.
2. Cyclic non-regenerative system - This closed-loop type of system has a large percentage of the removed sulfur contained in a throwaway or salable product. As much as possible of the liquor stream is recycled through the scrubber. Depending on

the process, SO_2 may or may not be recovered.

3. Cyclic-regenerative system - This closed-loop type of system recovers SO_2 and has a relatively small waste product for disposal. The absorbent is regenerated and the liquor stream recycled through the scrubber.

The nature of metallurgical process off-gases is somewhat unique in that a wide variety of contaminants are included in the effluent stream along with sulfur dioxide. The presence of high concentrations of oxygen (relative to fossil-fuel-fired power generating plants), particulates, acid gases, metallic fumes, and high gas temperatures could cause chemical or mechanical problems with cyclic absorption systems. In most cyclic systems, pretreatment of the process off-gases would be required prior to absorption of the sulfur dioxide in the scrubbing media.

During the past forty years, over fifty process schemes utilizing various types of absorbents as scrubbing media have been investigated on a bench-scale, pilot-plant, or prototype basis in an effort to perfect the optimum control for low concentrations of sulfur dioxide in process off-gases. As a result of these efforts, at least two processes have emerged as worthy of commercial application in the control of low concentrations of sulfur dioxide in process off-gases from primary copper, lead, and zinc smelters. These are the Cominco ammonia absorption process and the ASARCO DMA process. Two other processes that have had commercial application in the control of SO_2 from either fossil-fuel-fired power plants, sulfur recovery plants or sulfuric acid plants and are considered to have high potential in the control of low concentrations of SO_2 from smelter processes are calcium-based

absorption systems and sodium sulfite-bisulfite absorption systems.

Brief discussions of the four above-noted sulfur dioxide absorption systems and their applicability to metallurgical processes follow.

4.3.1 Calcium-Based Scrubbing Systems

Summary--

There are no known installations of calcium based scrubbing systems installed to control sulfur dioxide emissions from either domestic or foreign primary copper, lead or zinc smelters. However, facilities have been installed to control sulfur dioxide emissions from fossil-fuel-fired power plants, as well as a molybdenum ore roaster, a secondary lead smelter, and an iron ore sintering plant. All of these applications control process off-gases that have sulfur dioxide concentrations of less than 0.6 percent (6000 ppm).

It has been demonstrated that calcium-based scrubbing systems are viable control methods for low concentrations (500 to 5000 ppm) of sulfur dioxide, and although it has not been commercially demonstrated that calcium-based scrubbing systems could be utilized to control "weak" streams (5000 to 30,000 ppm), it appears that the technology could be transferred for the control of weak streams from primary copper, lead and zinc smelters.

General Discussion--

Calcium-based scrubbing systems may be of the non-cyclic type or of the cyclic-nonregenerative type. In the non-cyclic system, the absorbent passes through the scrubber on a once-through basis. Early work on this type of system was conducted by the London Power Company in the 1930's;[1,2] alkaline Thames River water provided the absorbent. This type of system has inherent water pollution problems in some situations that would preclude its usage on a wide scale.

Also in the 1930's, technology was developed on cyclic-nonregenerative scrubbing systems. Lime-limestone (calcium based) processes were used on a commercial scale at the Fulham Power Station in England to control

SO_2 emissions from power plant off-gases.[1,2,3]

A large number of process variants have been developed for calcium-based scrubbing systems. The two most popular variants are the ones that employ either (1) calcium carbonate or limestone, or (2) calcium hydroxide or slaked lime. A simplified flow diagram for a limestone slurry scrubbing system is depicted in Figure 4-4.

The process description is essentially as follows. The SO_2-laden process off-gases vent to a scrubber where they are scrubbed countercurrently with a limestone slurry. Off-gases from the scrubber vent to the atmosphere. The SO_2-laden slurry from the scrubber is split with a portion going to the pump tank and a portion going to the settler. Calcium carbonate is added to the pump tank as make-up, and effluent from both the pump tank and the settler are recycled to the scrubber. Solids in the loaded absorbent ($Ca\ SO_3$ + $Ca\ SO_4$) are removed in the settler and pass to disposal.

The lime slurry scrubbing system is also depicted in Figure 4-4. This system is essentially the same as the limestone scrubbing system except that limestone is calcined to calcium oxide prior to introduction into the scrubber slurry feed system.

The use of pulverized limestone as a reactant is the simplest approach in SO_2 scrubbing; however, the main problem with this system is that limestone is not as reactive as lime, and consequently more limestone is necessary (on a stoichiometric basis), a larger scrubber is required and more slurry must be recirculated. For fixed scrubber parameters, lime scrubbing, though increasing scrubbing efficiency, necessitates calcining of the limestone with resulting increased costs.

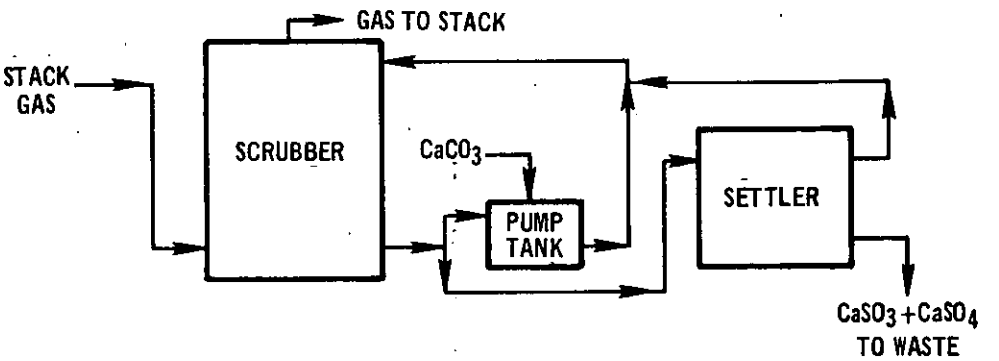

Scrubber addition of limestone.[3]

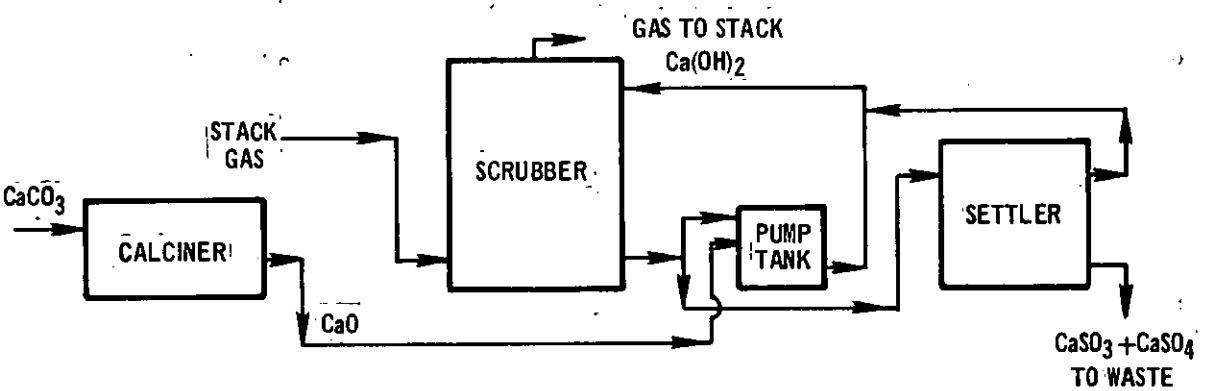

Scrubber addition of lime.[3]

Figure 4-4 Limestone/lime scrubbing processes.

A brief summary of scrubber parameters that could affect the operation or the sulfur dioxide removal efficiency of limestone scrubbing systems is as follows:

1. Scrubber design. The design of the scrubber is critical in limestone scrubbing systems. Mass transfer relationships and the scaling problem must be considered. Optimum design would optimize the following requirements: (1) large holdup, (2) high relative velocity between the gas and liquid phase, (3) maximum liquid surface, (4) a minimum of internal parts; and (5) minimum pressure drop.[1]

2. Type of limestone. The ability of carbonate stones to chemisorb sulfur dioxide varies greatly. An evaluation of ten different stones from quarries in Ontario, Canada, indicated that calcite-type stones maintain a high efficiency for sulfur dioxide removal until nearly exhausted, and dolomite stones consistently gave poor performance compared to the calcites.[4]

3. Limestone particulate size. The efficiency of sulfur dioxide removal and the effective utilization of the stone are both affected by the degree to which limestone is ground. An evaluation of a calcite sample ground to five different sizes showed a sharp decrease in sulfur dioxide absorption capacity for material coarser than an 80 x 100 size fraction. The absorption capacity did not change appreciably when the particle size was less than 100 mesh.[4] It is reported in the literature that in using lime, the particle size does not appear to be critical, possibly because most slaked limes have small particle size.[5]

4. Liquid to gas flow ratio. The ratio of liquid to gas flow (L/G) is important presumably because of its effect on decreasing gas phase resistance to sulfur dioxide mass transfer[2] and for scale control.[5] A fairly high ratio, about 50 gal/1000 scf, has been necessary in most cases to get a high degree of sulfur dioxide removal (>80%), when limestone was used.[2] It is pointed out, however, that a given L/G that permits scale control at 2000 ppm SO_2 may not be effective at 10,000 ppm SO_2.[5]

5. Slurry pH. An important consideration in the scrubber operation is the slurry pH, especially in regard to changes in pH that may occur in the scrubber circuit. The main concern with pH is its effect on scaling, corrosion, and blinding of reactive surfaces.[2]

The effect of pH on solubility of $CaSO_3 \cdot 5H_2O$ and $CaSO_4 \cdot 2H_2O$ at 50°C (122°F) is shown below:[1]

	Parts Per Million		
pH	Ca	SO_2*	SO_3**
7.0	675	23	1,320
6.0	680	51	1,314
5.0	731	302	1,260
4.5	841	785	1,179
4.0	1,120	1,873	1,072
3.5	1.763	4,198	980
3.0	3,135	9.375	918
2.5	5,873	21,999	873

*Sulfite

**Sulfate

Tests in Ontario, Canada, indicated that the pH of a freshly prepared limestone slurry is usually between 8 and 9. The efficiency of sulfur dioxide removal is not appreciably affected until the pH drops to about 4.8, after which the efficiency falls off rapidly.[4] Mild steel cannot be used at pH less than 6.2 without risking severe corrosion problems.[5] Rapid decrease in pH caused by absorption of SO_2 followed by rapid increase in pH caused by the addition of limestone can cause sulfite precipitation on the limestone slurry particles, thus blinding them and making the calcium carbonate inside unavailable for further reaction.[5]

6. Inlet gas temperature. A significant variable in calcium-based scrubbing systems is the temperature of the inlet gas stream. Test data indicate that the sulfur dioxide removal efficiency decreases linearly as the temperature of the gas increases.[1] The partial pressure of sulfur dioxide increases by 18 percent for a 10°F temperature rise, which indicates the likelihood that warm incoming gas could strip sulfur dioxide from the absorbent slurry. Humidification cooling is probably all that is required to prevent stripping.[5] Scaling problems at the wet-dry interface caused by evaporation of water from the solution or slurry may also result from high inlet gas temperature.[1]

7. Slurry solids loading. High slurry solids loadings provide improved rates of solubility for calcium, thus providing more effective replenishment of the calcium ion. In addition, there is a beneficial effect of minimizing scaling and plugging by increasing the rate of desupersaturation - particularly with respect to sulfate - thus helping to confine precipitation to the holding tanks and avoiding excessive scale deposits in the process equipment and process lines. The most efficient sulfur dioxide removal has consistently been obtained with slurry solids loadings of 12 to 15 percent. Higher loadings cause

silting out problems. It is pointed out that high solids loadings are extremely abrasive and may cause increased operating problems.[5]

Survey of Operating Experience --

A partial list of commercial applications of calcium-based sulfur dioxide absorption systems is shown in Table 4-3.

The Commonwealth Edison Company "Will County No.1" unit started up in February 1972. The system consists of two identical parallel wet limestone scrubbing systems, each consisting of a venturi for particulate removal, followed in series by a turbulent contact absorber (TCA) for SO_2 absorption.[3]

The sulfur dioxide control system is guaranteed to achieve 80 to 85 percent SO_2 removal. This removal efficiency has been achieved but various operating problems have prevented continuous operation. Since start-up in 1972, the system has been plagued by a variety of mechanical problems such as plugging of the demister, construction debris plugging nozzles, power loss to pond reclaim pumps, vibration, loosened screens in the pump and in the recirculation tank, reheater pluggage, failure of expansion joints, and breakage of the paddle on the slurry tank mixer.

Only the demister pluggage problem has been chronic and the solution to the problem does not appear to involve more than redesigning the demister washers. Scaling has not been a serious problem with the system.[3]

The Mitsui Aluminum Company has installed a lime scrubbing system on the Mike Power Station, located near Omuta, Japan. The unit started up March 29, 1972. The facility consists of a two-stage venturi scrubbing system.[3]

Table 4-3 CALCIUM SCRUBBING INSTALLATIONS

A. Non-Smelter Effluent Streams

	Company	Control System Supplier	Process	Fuel Fired	SO_2 Removal Efficiency
1.	Commonwealth Edison Co. "Will County No.1"	Babcock and Wilcox	Power plant 175 mw	3.5% S coal	75-85%
2.	Mitsui Aluminum Co., Ohmuta, Japan	Chemico	Power plant 156 mw	3.5% S coal	90%
3.	Sodersjukhuset Hospital Stockholm, Sweden	A.B.Bahco	3 Boilers	oil (800-1800 ppm SO_2 in stack gases)	97-99%

B. Metallurgical Effluent Streams

	Company	Control System Supplier	Process	Volume	SO_2 Concentration Inlet	SO_2 Removal Efficiency	Remarks
1.	Duval Corporation "Sahuarita Plant"	Air Corrections Division, U.O.P.	Molybdenum ore roasting	104,000 CFM	5000 ppm	96% (Guaranteed)	Uses lime as absorbent. Reportedly has had problems with scaling and plugging.
2.	General Battery Corporation Reading, Penn.	Custom Made	Secondary lead smelter, two blast furnaces	66,000 CFM	2000-6000 ppm	up to 90+%	Afterburner and baghouse used for precleaning; uses lime as absorbent.
3.	Yahagi Iron Works Nagoya, Japan	A. B. Bahco	Sintering plant	48,300 SCFM @ 32°F	2500-4000 ppm	90-95%	Uses waste carbide sludge as absorbent.

The sulfur dioxide control system is guaranteed to achieve 90 percent SO_2 removal. This removal efficiency has been achieved but currently the system is adjusted for 80 percent efficiency which is just adequate to meet current Japanese SO_x standards. Since start-up no serious chemical or mechanical problems have been detected in the scrubbing system.[3] This unit is significant since the system design is based on U. S. technology (Chemico).

The Sodersjukhuset Hospital in Stockholm, Sweden has installed three A.B.Bahco, two-stage inspirating scrubbers with lime as the reactant. The scrubbers serve three oil-fired steam generators.[4] The first of the three scrubbers was installed in 1969 and based on satisfactory experience with the unit, the other two units were installed. The units have been routinely operated at 95 to 98 percent sulfur dioxide removal efficiencies.[3] The system has been licensed to Research-Cottrell for sale in the United States, although no units have been sold in the United States as yet.[6]

The Duval Corporation, located near Tucson, Arizona, has installed two 4-stage model 500 turbulent contact absorbers (TCA) to remove SO_2 from the off-gas of its molybdenum sulfide roasters. The units were designed by UOP, use lime slurry as the absorbent and are rated at 50,000 scfm each. The guaranteed efficiency of the system is 96 percent. The system has operated since July 1971; however, reportedly there have been extensive problems with scaling and plugging.[5]

The General Battery Corporation, located at Reading, Pa., has installed a custom-made lime scrubbing system to control SO_2 emissions from its secondary lead smelter. Process off-gases from two blast furnaces and a reverberatory furnace are vented to the system. The process gas is vented

at a rate of 66,000 cfm and the sulfur dioxide concentration varies over a range of approximately 2000 to 6000 ppm.[7]

The scrubbing system was put on stream in August 1971 and after over a year of operation, there was no evidence of scale formation. Erosion did create problems originally, but the use of proper materials of construction as well as piping redesign has solved the problem.[7] Efficiencies in excess of 90 percent have been obtained.

The Yahagi Iron Works located in Nagoya, Japan, has installed a calcium-based A.B.Bahco scrubbing system to control SO_2 emissions from a sintering plant.[6] The system handles 48,300 scfm of process off-gases with a SO_2 concentration ranging from 2500 to 4000 ppm. The efficiency of the system is 90-95 percent.[6]

There are no known calcium-based scrubbing systems used by either domestic or foreign primary copper, lead or zinc smelters to control sulfur dioxide emissions from process off-gases. The reason for this is presumed to be economics since a throw-away product is obtained from the scrubbing system.

Technically, there are no known problems that would be insurmountable in the application of a calcium-based scrubbing system to control sulfur dioxide from smelter effluents; however, it would appear that its usage would be primarily applicable to weak streams from smelter processes, again because of economics.

Calcium-based scrubbing systems have been used to control sulfur dioxide emissions from fossil-fuel-fired steam generators. The operating problems that industry has had to cope with are similar to those that would apply to smelter effluents. In both cases, the operating problems

can be divided into categories related to either chemical or mechanical operating problems.

The chemical problems relate to SO_2 absorption, scaling and corrosion. The following techniques should be equally applicable to smelter effluent and flue gas scrubbers although the details of implementation may be different.[8]

1. Solids recycle. Solids recycle has generally been proven to be good in preventing scale formation.[9]

2. High L/G. High L/G's are good in preventing scale formation. In fact, one can say the higher the better within economic limits.[9]

3. pH control. pH control is an important factor in controlling scale deposit.[9] At pH above 6, the potential for sulfite scaling is very great. At low pH, corrosion can be a problem.

4. Use of multistage scrubbers. Multistaged scrubbers must be used for smelter effluent.[8] The scrubbers can be designed to minimize scale. The use of multistage scrubbers is primarily a function of the amount of SO_2 removal required. The more removal desired, the more contact area required.[6]

5. Temperature control. The rate of scale deposition appears to increase with increasing temperature.[9] In actual plant operation the scrubbing temperature would be fixed, as a practical consideration, at the wet bulb temperature.[2]

The mechanical problems related to calcium-based scrubbing systems are similar to those inherent with any chemical process that involves

pumping of slurries and abrasive and corrosive mixtures. The chemical industry has successfully handled these problems for many years.

Mechanical problems in many instances may relate to (1) poor piping design resulting in plugging or erosion of lines, (2) the improper design, use and operation of fans, pumps, and motors, (3) the use of improper materials of construction that can result in corrosion of equipment handling basic or acidic solutions, (4) improper scrubber or demister design that can cause plugging problems in the demister, and (5) lack of spare pumps, motors and scrubbers that may necessitate shutdown or by-passing of control facilities.

4.3.2 Dimethylaniline (DMA) Scrubbing

Summary--

The American Smelting and Refining Company dimethylaniline (DMA) process has been used to recover sulfur dioxide from smelter gases containing 4 to 10 percent sulfur dioxide. The process has been utilized to recover sulfur dioxide included in process off-gases emanating from Dwight-Lloyd lead sintering machines, and blended effluents from copper smelter roasters, reverberatory furnaces and converters.

A new DMA system was put into service in November 1972 by Phelps-Dodge Corporation at Ajo, Arizona, to recover sulfur dioxide from copper smelter reverberatory furnace and converter process off-gases. The system is reportedly designed to process reverberatory furnace off-gases with sulfur dioxide concentrations ranging from 1-1/2 to 2 percent although proportional valving is installed so that converter gas can also be fed to the system. Although insufficient data are presently available to evaluate the Ajo facility when operated on copper smelter reverberatory furnace off-gases alone, it has been demonstrated in other applications that mixtures or blends of process off-gases from roasters, reverberatory furnaces and converters can upgrade the sulfur dioxide concentration of the feed stream to the DMA process so that the system can be operated in an acceptable manner.

It is concluded that the DMA absorption system is a viable process that can be utilized to control sulfur dioxide emissions from properly cleaned and conditioned smelter process off-gases that have (or can be upgraded to have) sulfur dioxide concentrations in the range of 4 to 10 percent.

It is anticipated that the DMA system will be commercially demonstrated in the near future for use on weak SO_2 streams from copper smelting operations.

General Discussion--

The early development work on organic scrubbing systems designed to recover and concentrate the sulfur dioxide contained in the off-gases from non-ferrous smelters was done in Europe. Much of this work was centered around dimethylaniline (DMA) and similar compounds such as xylidine and toluidine. Out of this work came two separate processes (viz. Sulphidine and DMA) that found limited commercial application in Europe. The Sulphidine process[10] utilizes an aqueous xylidine scrubbing media and is primarily applicable to lower SO_2 concentration inlet streams than is DMA. Although one DMA unit has been installed in Mexico and another has been installed in Spain, most of its application has been in the United States.[11]

The American Smelting and Refining Company (ASARCO) is the domestic developer of a DMA process, as well as the first commercial customer for the process.[10]

The DMA absorption system is a cyclic-regenerative process. The system incorporates an absorption tower with numerous trays that allow for much greater gas phase mass transfer and reactant surface area than other scrubbers such as venturi or single-bed type. Liquid sulfur dioxide is recovered as a product, and the absorbent is regenerated and recycled through the system. A small purge stream is required to eliminate sodium sulfate (in solution) from the regenerator section. A small amount of dimethylaniline is also included in the purge stream.

A simplified flow diagram for the dimethylaniline scrubbing system is depicted in Figure 4-5. A brief description of the process is essentially as follows. Pretreated SO_2-laden process off-gases vent to the bottom of a bubble plate scrubbing tower where most of the SO_2 is absorbed in a counter-current stream of anhydrous dimethylaniline. The gases, impoverished in sulfur dioxide and enriched in dimethylaniline vapors, then pass to a second section of the tower where they are scrubbed with a weak sodium carbonate solution. The residual SO_2 in the gases converts the sodium carbonate to sodium sulfite or sodium bisulfite. The carbon dioxide is liberated in the gas stream. The effluent gases then pass to a third section of the scrubbing tower where they are scrubbed with a weak sulfuric acid solution and entrained vaporized dimethylaniline is recovered as dimethylaniline sulfate. The effluent then vents to the atmosphere.

Pregnant dimethylaniline is heated by exchange and then passes to the center section of a bubble plate stripping tower. The liquid flows downward countercurrent to a rising column of steam and sulfur dioxide vapors. The sulfur dioxide is stripped from the dimethylaniline and escapes upward through the tower. The recovered dimethylaniline is cooled and then passes to a series of separators where the absorbent floats on the water and can be physically separated and sent to the DMA surge tank for recycle.

The aqueous effluent from the soda scrubbing and acid scrubbing sections of the absorption tower passes to a collection tank where dimethylaniline is liberated as a result of the reaction between

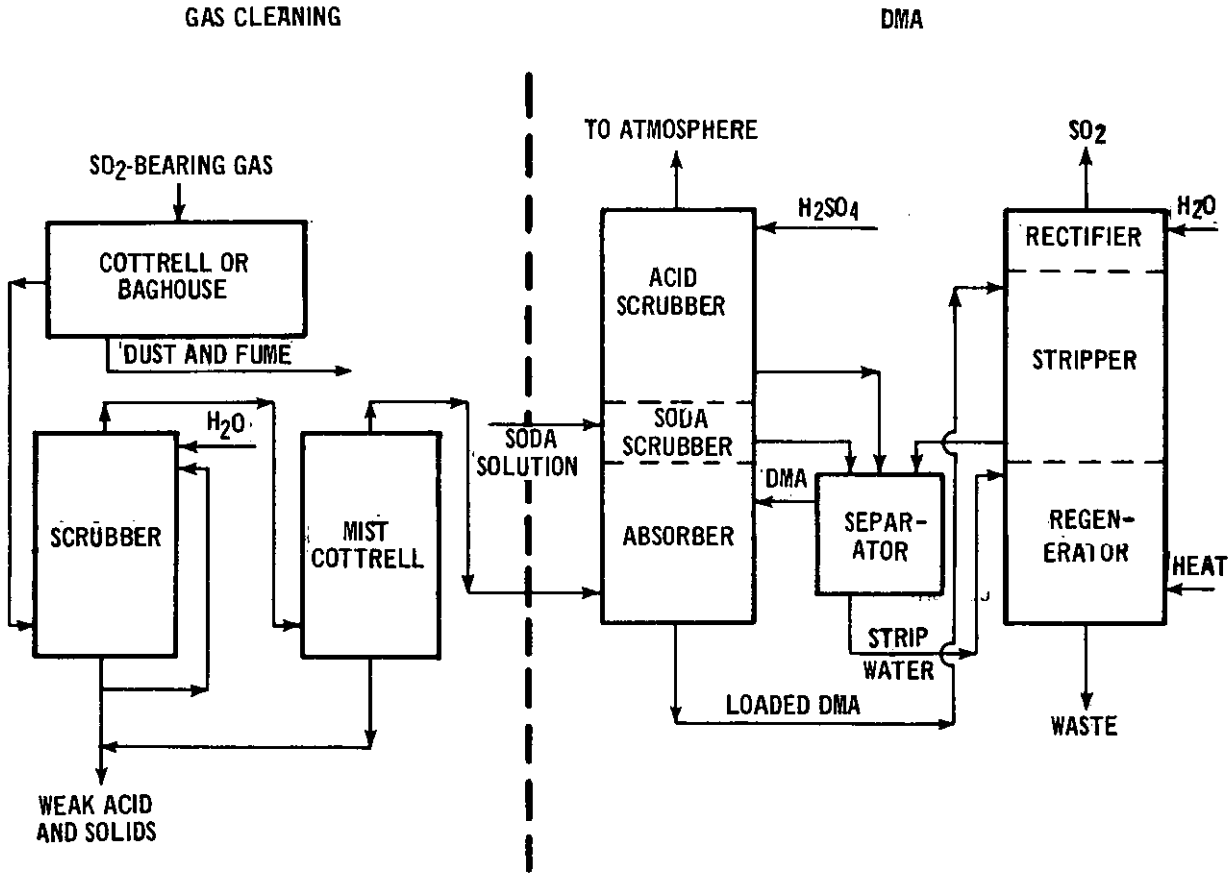

Figure 4-5 DMA Scrubbing Process.

dimethylaniline sulfate from the acid scrubber and the sodium sulfite-bisulfite from the soda scrubber. Part of the dimethylaniline remains dissolved in the water as dimethylaniline sulfite. The water/dimethylaniline sulfite/sodium sulfate solution empties to a stripper water tank. This solution then passes to the bottom section (regenerator) of the stripping tower where the dimethylaniline sulfite is thermally decomposed and SO_2, DMA, and water are vaporized and vented into the stripper section of the tower. A small purge stream is drawn off the regenerator to remove sodium sulfate.

The stripped SO_2 and residual DMA vapors pass from the stripping section into the top section (rectifier) of the stripping tower where they are bubbled through the water. The DMA, by reacting with SO_2 in the presence of water, is recovered as dimethylaniline sulfite and passes back to the stripper section.

The sulfur dioxide effluent stream from the rectifier is cooled to condense water, then scrubbed with cold water, and dried in a tower with 98 percent sulfuric acid. The gas is then compressed, cooled, liquefied, and run to storage.

A partial list of commercial applications of ASARCO DMA sulfur dioxide absorption systems is shown in Table 4-4.

The first domestic commercial application of the DMA absorption system was made by ASARCO in 1947[10] to recover sulfur dioxide from Dwight-Lloyd lead sintering machine off-gases. The lead smelter located at Selby, California, is no longer in operation;[11] however, the DMA absorption system is leased to a chemical company.[12] The DMA plant was nominally rated at

Table 4-4 ASARCO DMA Installations.

	Company	Process	DMA Design Capacity Liquid SO_2	SO_2 Concentration Inlet	SO_2 Concentration Outlet	Remarks
1.	American Smelting and Refining Company Selby, California	Dwight-Lloyd lead sinter machine	20 T/D	4-6%	500-3000 ppm	Outlet concentration related to cooling water temperature. No longer operating on smelter off-gases.
2.	Cities Service Company Copperhill, Tennessee	Mixture of gases from iron and copper roasters, reverberatory furnaces and converters.	#1 40 T/D #2 55 T/D	$\geq$6%	2000 ppm	Two DMA units in operation.
3.	Phelps Dodge Corporation Ajo, Arizona	Copper smelter reverberatory furnace and/or converters	150 T/D	1 1/2-2%		Plant in start-up phase.
4.	American Smelting and Refining Company Tacoma, Washington	Copper converters	200 T/D	3-10%		Plant under construction.

20 tons of liquid SO_2 per day. The sulfur dioxide content of the inlet gases usually ranged from 4 to 6 percent and averaged approximately 5 percent. The sulfur dioxide concentration in the process off-gases ranged from a low of approximately 500 ppm in the winter months to as high as 3000 ppm in the summer months, depending primarily on cooling water temperature.[11] Problems associated with materials of construction were encountered; however, these problems, in general, were satisfactorily resolved.[11] Lead, as a material of construction, was extensively employed to eliminate corrosion.[10,11]

In 1949, the DMA process was first utilized by the Tennessee Copper Company (now Cities Service Company) at their smelter operations at Copperhill, Tennessee. The capacity of the plant was nominally rated at 30 tons of liquid SO_2 per day. Subsequently, the capacity of the original plant was increased and a second DMA plant added. The two DMA plants are currently rated at 40 and 55 tons of liquid SO_2 per day, respectively.[11] The feed stream for the DMA plant is $\geq$ 6 percent SO_2, and is a mixture of process off-gases from iron and copper roasters, copper reverberatory furnace and copper converters.[13] The inlet gas to the DMA scrubber is precleaned in the same system as acid plant gas, then bled off before the acid plant absorber. The sulfur dioxide concentration of the off-gases from the DMA absorption tower approximates 3000-5000 ppm, but reportedly the absorption tower could be operated as low as 1500 ppm without requiring major modifications.[13] The DMA plants were primarily designed to produce liquid SO_2 for market and were not built as air pollution control devices. The only operating difficulty associated with the DMA plants is that of regulating the pH of the

system. If pH control is lost, carbonation occurs, causing vaporization in the pumps.[13]

In November 1972, operation of a DMA process was initiated by the Phelps Dodge Copper smelter located in Ajo, Arizona. The system is used to control (either separately or in combination) emissions from a copper reverberatory furnace and copper converters. The DMA plant is nominally rated at 150 tons of liquid SO_2 per day.[11] The feed stream for the DMA plant can vary widely depending on the source of the process off-gas. Reverberatory furnace off-gases may contain 1-1/2 to 2 percent SO_2 while the converter off-gases may contain 7 to 14 percent SO_2.[14] The inlet gas to the DMA scrubber is precleaned in a system essentially identical to that serving the acid plant.[14] The sulfur dioxide concentration of the off-gases from the DMA absorber are expected to be approximately 500 ppm.[14] Materials of construction for the absorption system are 316 stainless steel and alloy 20 throughout.

The Ajo DMA system has only had limited usage since its completion in November 1972. The reason for this has reportedly been due to mechanical problems with the system, i.e., the SO_2 compressor down for repair. Thus far there have been no chemical problems such as scaling or corrosion problems.[14] The system, however, will be down for the remainder of 1974 due to the numerous mechanical problems.

ASARCO is currently constructing a DMA unit, rated at about 200 tons of liquid SO_2 per day and scheduled for start-up in September, 1974, at their Tacoma, Washington, copper smelter. The unit will treat copper converter gases that average about 5 percent SO_2. An unusual aspect of this facility is that the

purge stream of sodium sulfate will be utilized to condition a gas stream in preparation for electrostatic precipitation of particulates. The collected Cottrell dust with the included sodium sulfate will be shipped to a lead smelter for further processing.[11]

Reportedly, this type of sulfur dioxide absorption system has few significant operating problems if the process off-gases are properly cleaned and conditioned. Scaling, erosion, mist elimination, and gas reheat are not major problems with existing units.[14] Corrosion can cause problems; however, recent installations constructed of 316 stainless steel and alloy 20 reportedly cause no major problems.[11] Only one shift foreman and one general utility man on day shift as well as one to two operators (depending on local conditions) are required for normal plant operation.[11]

A brief summary of operating problems that could affect the operation or the sulfur dioxide removal efficiency of DMA scrubbing systems is as follows:

1. Precleaning of Process Off-Gases.

ASARCO considers that particulate removal equivalent to that required for a contact sulfuric acid plant treating metallurgical gas streams is required for successful application of the DMA process. With this degree of particulate removal, ASARCO has never experienced any problem associated with the carryover into the DMA plant of particulate matter containing Hg, As, Pb, Cd, Zn, Mn, V, Be, Cu, Sb, Co, Se, Ni or Cr.[11]

2. Waste Sodium Sulfate

The waste sodium sulfate formed in the ASARCO DMA process depends primarily on the amount of sulfuric acid used for recovery of DMA vapor in the absorption tower.[12]

The absorption reaction between SO_2 and dimethylaniline is exothermic; hence, intercoolers are required between each of the absorption tower trays to cool the absorbent. Cooling of the absorbent not only increases the capacity of a unit of dimethylaniline to transfer SO_2, but it also reduces the vapor pressure of the dimethylaniline[10] thus decreasing DMA vapor losses. As a result of decreasing absorption temperatures, reagents are saved and sodium sulfate formation is less.[10,12] With the absorbent being totally organic, oxidation plays a relatively minor role in waste sodium sulfate generation.[12]

A decrease in the SO_2 concentration of the process off-gases requires an increase in the use of reagents and, consequently, an increase in the formation of sodium sulfate. For example, when treating a gas stream having an SO_2 concentration of 5 percent, assuming an absorption tower operating temperature of 30°C, approximately 40 pounds of sodium sulfate (in solution) is formed per ton of SO_2 recovered. All other factors being equal, approximately 400 pounds of sodium sulfate (in solution) would be expected when treating a gas stream having an SO_2 concentration of 0.5 percent.[11]

4.3.3 Ammonia Scrubbing Systems

Summary--

The Cominco absorption process has been used to treat process off-gases with sulfur dioxide concentrations as low as 0.5 percent, with very good recovery. Tail gases contain as little as 0.03 percent sulfur dioxide.

The process has been utilized to recover sulfur dioxide included in process off-gases from Dwight-Lloyd lead sintering machines, zinc roasters, and sulfuric acid plant tail gases.

It is concluded that the Cominco process is a viable process that can be utilized to control sulfur dioxide emissions from properly cleaned and conditioned smelter process off-gases that have sulfur dioxide concentrations in the range of 0.5 to 6.0 percent.

General Discussion--

Ammonia scrubbing systems have received considerable attention in the history of SO_2 removal from process off-gases. The reasons for this include relatively high affinity of ammonia solutions for SO_2 and the ability to keep all the compounds involved in solution, thereby avoiding scaling and silting problems in scrubbers.[1]

The Cominco ammonia absorption process was developed by the Consolidated Mining and Smelting Company of Canada, Ltd., (Cominco) in 1936. The U. S. licensor for the process is Olin-Mathieson Chemical Corporation. Plant units have been built by Cominco in Trail, B. C., Canada, to treat gases from lead and zinc smelting operations. The Olin-Mathieson Corporation has installed plants to treat the tail gases from sulfuric acid plants.[15]

A simplified description of the Cominco process is as follows (see Figure 4-6). Hot smelter off-gas is treated and conditioned prior to introduction into the first scrubbing tower. The gases are cooled, fine solids are washed out, and sulfur trioxide is absorbed to form weak sulfuric acid.[15,16] The cooled off-gases then pass to the bottom of a scrubbing tower where they are contacted with a counter-current flow of ammonium sulfite-bisulfite solution. The solution in the first scrubber is maintained at low pH (approximately 4.6)[17] and high salt concentration. Sulfur dioxide is absorbed to form additional ammonium bisulfite. A portion of the solution is recycled back through the tower, and a portion of the solution from the tower is sent to the stripper.

The partially cleaned gases then pass to a second scrubber where additional sulfur dioxide is removed by contact with an ammonium sulfite-bisulfite solution that is at a high pH (approximately 5.4)[17] and has a low salt concentration. A portion of the scrubbing solution is recycled through the scrubber, and a portion of the solution from the tower is sent to the scrubber. The off-gas from the scrubber passes to the atmosphere.

The bisulfite solution diverted to the stripper is acidified with sulfuric acid and stripped with air to produce about a 25 percent sulfur dioxide gas stream,[16] and a solution of ammonium sulfate containing about 10 percent of the feed sulfur.[16] The ammonium sulfate is then crystallized out and utilized as a fertilizer.

If the consumption of sulfuric acid and ammonia and the production of ammonium sulfate are not economically favorable, the sulfur dioxide

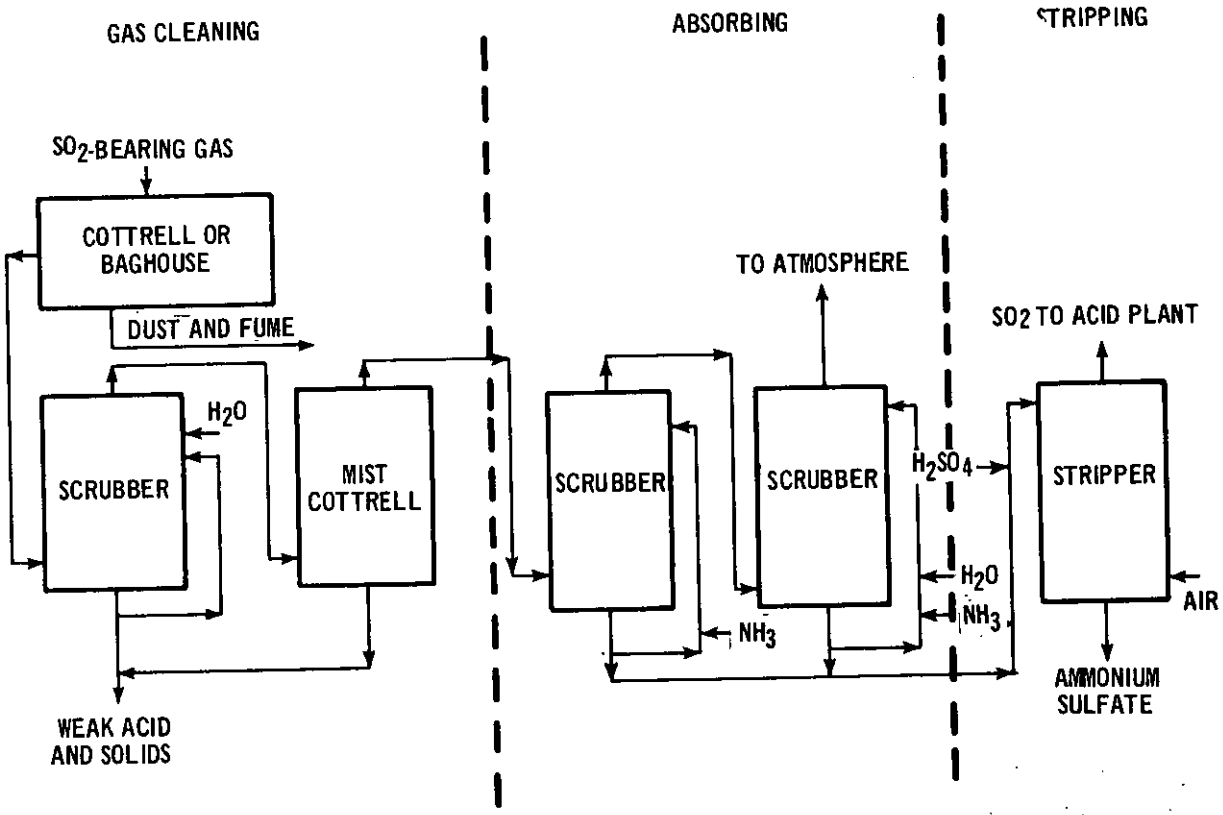

Figure 4-6 Cominco ammonia scrubbing process.

can be removed from the ammonium bisulfite solution by stripping with steam. Under the name of the "Exorption-Process,"[18,19] this type of system was used by Cominco during the years 1940 to 1943 permitting the recycle of 30 percent of the required ammonia.[20] It is still considered by Cominco to be a feasible process for use under appropriate economic conditions.[19]

A partial list of commercial applications of Cominco-type ammonia scrubber systems is shown in Table 4-5. The Consolidated Mining and Smelting Company of Canada, Ltd., has operated ammonium sulfite-bisulfite scrubbing systems at their smelter located at Trail, B. C., Canada, since the 1930's.[19] The ammonia scrubbing systems serve Dwight-Lloyd lead sintering machines, zinc roasters and sulfuric acid plant tail gases.[20,21] Chemical treatment of the absorbent with sulfuric acid releases concentrated sulfur dioxide and produces an ammonium sulfate solution. The sulfur dioxide is either liquefied or utilized as feed for a sulfuric acid plant. The ammonia sulfate is crystallized out and utilized as fertilizer.

The sulfur dioxide concentration of the inlet gases to the Dwight-Lloyd lead sintering machine absorption system ranges from 0.3 to 2.5 percent SO_2. The sulfur dioxide concentration in the outlet gases from the absorber under normal operation is approximately 0.1 percent.[17] This concentration of SO_2 can be reduced to 0.05 percent SO_2 or lower.[20] However, fumes cause major visible emission problems at this installation under these conditions.[17]

The zinc roaster off-gases have a sulfur dioxide concentration ranging from 0.5 to 7.0 percent.[20] The concentration of SO_2 in the absorption tower off-

Table 4-5 COMINCO-TYPE AMMONIA SCRUBBING INSTALLATIONS

	Company	Process	Volume	SO_2 Concentration Inlet	SO_2 Concentration Outlet	Remarks
1.	Consolidated Mining and Smelting Company of Canada, Ltd. Trail, B.C., Canada	Lead sintering	200,000 SCFM	15,000 - 25,000 ppm	1200 ppm	
		Zinc flash and multihearth roasters	0-45,000 SCFM	60,000 ppm	1000 ppm	Handles excess not sent to acid plant
		Sulfuric acid plant tail gases	50,000-95,000 SCFM	5000 ppm	700 ppm	
2.	Allied Chemical Corp. Newell, Pennsylvania	Sulfuric acid plant tail gases	-	3000 ppm	100 ppm	Ammonium salt solution incinerated in pyrite roaster system
3.	Olin Chemical Corp. Beaumont, Texas	Sulfuric acid plant tail gases	-	3000 ppm	750 ppm	
		Sulfur recovery plant tail gases	-	20,000 ppm	2000 ppm	

gas under normal operation is approximately 0.1 percent.[22]

The existing absorption towers at Trail are constructed of wood and lead. New installations would be considerably more compact and would be constructed of plastics or PVC.[17] Ammonium bisulfite solutions are not very corrosive to iron and steel (for piping and pumps) if no vapor phase is allowed to form.[20] The effluent from the second absorber is reheated to approximately 45°C prior to venting from the stack.[17]

The Allied Chemical Corporation sulfuric acid production facility, located at Newell, Pennsylvania, is equipped with a single ammonia tail gas scrubbing system. The plant consists of three sulfuric acid manufacturing systems. Two of the acid systems receive their feed stream from a pyrites roaster. The third receives its feed from burning elemental sulfur. The scrubbing solution is treated with sulfuric acid to liberate some SO_2 that is recycled to the process. The resulting solution of ammonium sulfate is sent to the weak acid clarifier along with "drips" from the gas cooler and the mist eliminator. The weak clarified acid is burned in a fluidized-bed preburner or dryer-roaster system; nitrogen, water vapor, and sulfur dioxide result.[23]

Olin Chemical Corporation, the U. S. licensee of the Cominco process, has installed ammonia scrubbing systems on some of its domestic sulfur recovery and sulfuric acid plants.[24] The inlet gas streams to these scrubbers contain from 0.3 to 2 percent SO_2, and removal efficiencies of from 75 to 90 percent are reported as being typical.[24]

This type of sulfur dioxide absorption system has few significant operating problems. The Cominco smelter at Trail, B. C., precleans and conditions the process off-gas prior to SO_2 absorption.[17] Scaling and

erosion are not problems. Corrosion does not cause problems if proper materials of construction are utilized. Older units utilized wood and lead as construction materials; however, newer units would utilize plastics and PVC.[20] Labor required for normal plant operation is one operator per shift, i.e., 3 per day, and 2 maintenance men per day.[20]

A brief summary of operating problems that could affect the operation or the sulfur dioxide removal efficiency of Cominco scrubbing systems is as follows:

1. Precleaning of process off-gases.

If smelter process off-gases were not precleaned prior to introduction into the scrubber, Cominco considers that problems could arise from fouling of cooler lines, etc., but that there would be no effect on absorption rates. The particulates would have to be removed by settling and filtering the bisulfite scrubbing solutions prior to acid treatment, as they would interfere with the springing of the SO_2 from solution.[20] Cominco precleans and conditions the process off-gases from their Dwight-Lloyd lead sintering machines prior to SO_2 absorption.[17]

2. Visible emissions.

A disadvantage of the ammonia sulfur dioxide absorption system is the formation of a fume from the absorber outlet. Cominco has indicated that pH[17] and temperature[20] of the absorbent can affect plume formation. Reducing the SO_2 concentrations of the absorber outlet reportedly intensifies the visible emission problem.[17] Cominco has conducted pilot plant tests utilizing an electrical precipitator with good results to suppress emissions.[17] Allied Chemical Company has utilized high-efficiency mist eliminators to minimize the problem.[23]

4.3.4 Sodium Sulfite-Bisulfite Scrubbing

Summary--

There are no known commercial sodium sulfite-bisulfite scrubbing systems installed to minimize sulfur dioxide emissions from either domestic or foreign primary copper, lead or zinc smelters; however, a number of domestic and foreign sodium sulfite/bisulfite scrubbing systems control tail gas emissions from sulfur recovery plants, sulfuric acid plants and oil-fired steam generators. The sulfur dioxide concentration in the process off-gases ranged from 2100 ppm to 13,000 ppm. The sulfur dioxide concentration in the Wellman-Lord absorber off-gases was 500 ppm or less.

It is concluded that sodium sulfite-bisulfite absorption systems appear to be technically feasible to minimize sulfur dioxide emissions from primary copper, lead and zinc smelters; however, it has not been demonstrated that the absorption process can be operated to control smelter off-gases without excessive oxidation of the absorbent resulting in a required large purge stream and, consequently, high costs. Both Davy Power Gas and Japanese organizations are working hard to improve this disadvantage.

General Discussion--

Most of the development work on a sodium sulfite-bisulfite scrubbing system in this country has been conducted by Davy Power Gas (formerly Wellman-Lord). Davy began this development about the mid-1960's using the potassium rather than the sodium salt. One of the primary reasons given for discontinuing the use of potassium was that numerous pilot-plant investigations had determined that regeneration costs were unduly high.[25]

A series of pilot-plant tests were run prior to the first commercial installation of this process. These pilot plants ranged in size from about 600 to 50,000 scfm and were installed on a variety of sources which

included coal and oil-fired steam generators and smelter processes such as converters and reverberatory furnaces.[26]

The Davy Power Gas scrubbing process is of the cyclic-regenerative type. Concentrated sulfur dioxide is recovered as a valuable product and the sodium sulfite-bisulfite absorbent is thermally regenerated and recycled through the system.

A simplified flow diagram for the Davy Power Gas scrubbing system is depicted in Figure 4-7.

As with most cyclic-regenerative absorption systems, pretreatment of the process off-gases is required if it is necessary to cool the process off-gases and to remove particulates and acid gases[25] that may interfere with the absorption process or cause problems such as corrosion and plugging or fouling of the system. This pretreatment step must be studied on a case-by-case basis to insure the selection of the optimum design in relation to the overall facility.[27]

The process description is essentially as follows. Pretreated SO_2-laden process off-gases are introduced into a scrubber where they are absorbed in a counter-current flow of a solution of sodium sulfite-bisulfite. The rich absorbent from the bottom of the scrubber is pumped to an evaporator crystallizer system where it is heated by indirect heat exchange with low-pressure steam. As a result of the regeneration step, steam and SO_2 are driven off; and sodium sulfite crystals are formed in the liquid. The wet sulfur dioxide gases are run through a condenser where the bulk of the steam is removed.

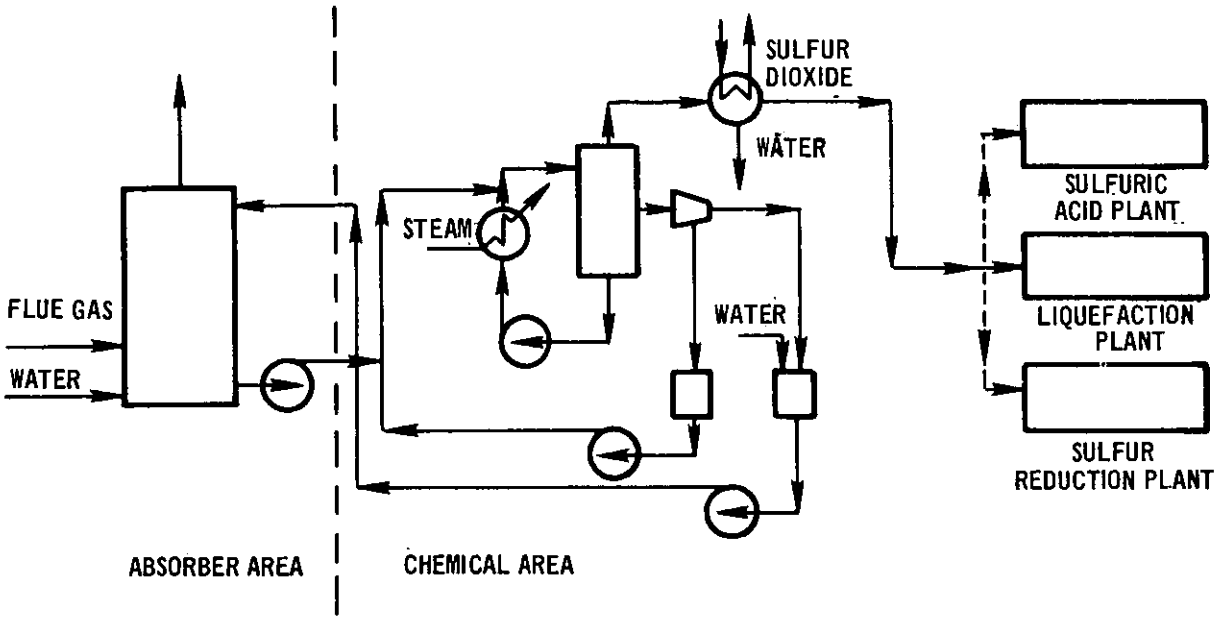

Figure 4-7 Davy Power Gas scrubbing process.

The concentrated SO_2 stream can be utilized in a sulfuric acid plant, a sulfur recovery plant, or some other appropriate sulfur dioxide process scheme.

The liquid phase from the evaporator crystallizer is sent to a centrifugal separator where the crystals of sodium sulfite are removed. These crystals are added to the water that was condensed from the SO_2 stream, and the solution thus formed is recycled to the scrubber. The clarified liquor from the centrifugal separator is recirculated to the evaporator. A portion of the clarified liquor is purged from the system in order to prevent a build-up of sodium sulfate in the system. The amount of sodium sulfate in the feed to the scrubber is controlled at about 5 percent by weight.[27]

A partial list of commercial applications of the Davy Power Gas sulfur dioxide absorption system is shown in Table 4-6. In 1970, a full-scale Davy Power Gas SO_2 absorption system was installed at the Olin Corporation regeneration sulfuric acid plant in Paulsboro, New Jersey, to treat 45,000 SCFM of the acid plant tail gas. The concentration of the off-gas contains up to 0.6 percent SO_2. The absorber off-gas is guaranteed not to exceed 0.05 percent SO_2.[27,28,29]

In 1971, another Davy Power Gas absorption system was installed at the Ichihara City Plant of the Japan Synthetic Rubber Company in Japan to treat 200,000 N M^3/Hr of stack gas from an oil-fired boiler. The concentration of SO_2 in the stack gases averages 0.2 percent SO_2. The absorber off-gases are guaranteed not to exceed 0.02 percent SO_2.[27,28,29]

Also in 1971, a Davy Power Gas absorption system was installed at the TOA Nenryo refinery in Kawasaki, Japan, to treat the off-gases from a sulfur recovery plant tail gas incinerator. The concentration of SO_2 in the off-gases ranges from 0.65 percent to 1.5 percent SO_2. The off-

Table 4-6 DAVY POWER GAS SCRUBBING INSTALLATIONS

	Company	Process	Volume	SO_2 Concentration Inlet	SO_2 Concentration Outlet
1.	Olin Corporation Paulsboro, New Jersey	Sulfuric acid plant tail gases	45,000 SCFM	4500 ppm	<500 ppm
2.	Japan Synthetic Rubber, Ichihara City, Chiba, Japan	Two oil-fired boilers	124,000 SCFM	2100 ppm	<200 ppm
3.	Toa Nenryo Kogyo, Ltd. Kawasaki, Kanagawa, Japan	Sulfur recovery plant tail gas	41,000 SCFM	13,000 ppm	200 ppm
4.	Standard Oil Company of California, El Segundo, California	Three sulfur recovery plant tail gases	75,000 ACFM		500 ppm

gases from the absorber are guaranteed not to exceed 0.02 percent SO_2.[27,28,29]

In 1972, another unit was installed at the Standard Oil Company of California at El Segundo, California, to control off-gases from three sulfur recovery plants. The off-gases from the absorber are guaranteed not to exceed 0.05 percent SO_2 (500 ppm).[27]

Other units designed to minimize the sulfur dioxide emissions from sulfuric acid plant and sulfur recovery plant tail gases are being installed.[27]

The advantage of the Davy Power Gas scrubbing system is the simplicity of its unit operations and the avoidance of steam stripping of the absorbent, thus substantially reducing steam requirements.[25]

It is recommended that the process off-gas be as free as possible from dust, fume, and vapor or gaseous contaminants such as arsenic trioxide, hydrogen chloride, hydrogen fluoride and sulfur trioxide. Solid particles in the absorbent solution may produce mechanical problems such as plugging or erosion while acidic gases and vapors will consume absorbent[25] or cause chemical problems such as corrosion.

Smelter effluents in many cases could also cause problems with the system due to the presence of high concentrations of oxygen in the process off-gas and the possibility of introducing potential oxidation catalysts into the absorbent.[25] In both cases a build-up of an excessive sodium sulfate concentration in the absorbent could result.

In the required purging of sodium sulfate from the absorption system, a portion of the sulfur dioxide is lost because of purging of associated sodium sulfite and sodium bisulfite. Total sodium sulfate formation directly affects the quantity of sodium hydroxide required.[29]

REFERENCES FOR SECTION 4.3

1. Slack, A.V.; "Sulfur Dioxide Removal from Waste Gases"; Noyes Data Corporation; Parkridge, New Jersey; 1971.

2. Slack, A. V. et al; "Sulfur Oxide Removal from Waste Gases: Lime-Limestone Scrubbing Technology"; Journal of the Air Pollution Control Association; Vol. 22, No. 3; 159-166; March 1972.

3. Final Report; Sulfur Oxide Control Technology Assessment Panel (SOCTAP) on Projected Utilization of Stack Gas Cleaning Systems by Steam Electric Plants; April 15, 1973.

4. Saleem, A.; "Flue Gas Scrubbing with Limestone Slurry"; Journal of the Air Pollution Control Association; Vol. 22, No. 3; 172-176; March 1972.

5. Campbell, I.E.; "Status Report on Lime or Wet Limestone Scrubbing to Control SO_2 in Stack Gas"; Engineering and Mining Journal; 78-85; December 1972.

6. Rogers, K. J.; Research-Cottrell Company; Response to Questionnaire Regarding Calcium-Based Scrubbing Systems; March 5, 1973.

7. Biter, J. A. and L. J. Minnick; "Lime-Sulfur Dioxide Scrubbing System and Technology for Utilization of Underflow Sludge"; Industrial Wastes; 34-37; March/April 1973.

8. Berkonwitz, J. B.; Arthur D. Little, Inc., Response to Questionnaire Regarding Calcium-Based Scrubbing Systems, March 1973.

9. Lowell, P. S., Radian Corporation; Response to Questionnaire Regarding Calcium-Based Scrubbing Systems; March 8, 1973.

10. Fleming, E. P. and T. C. Fitt; "Liquid Sulfur Dioxide from Waste Smelter Gases;" Industrial and Engineering Chemistry; Vol. 24; No. 11; 2253-2258; 1950.

11. Henderson, J. M.; Research Superintendent; Chemical Engineering American Smelting and Refining Company; Response to Questionnaire Regarding ASARCO DMA Scrubbing Systems; March 15, 1973.

12. Henderson, J. M.; Research Superintendent; Chemical Engineering American Smelting and Refining Company; Comments in Draft Document Entitled "New Source Performance Standards - Technical Report-Copper, Lead and Zinc Smelters; November 24, 1972.

13. Rovang, R. D.; Report of Visit to Cities Service Smelter; Copperhill, Tennessee; July 19, 1972.

14. Polglase, W. L. and F. L. Porter; Report on Visit to Phelps Dodge Smelter; Ajo, Arizona; March 14, 1973.

15. Systems Study for Control of Emissions-Primary Nonferrous Smelting Industry; Arthur G. McKee & Company; Western Knapp Engineering Division; Public Health Service; U. S. Department of Health, Education, and Welfare; Contract No. PH 86-65-85; June 1969.

16. U. S. Bureau of Mines; "Control of Sulfur Oxide Emissions in Copper, Lead, and Zinc Smelting"; Information Circular No. 8527; 1971.

17. Polglase, W. L. and Porter, F. G.; Report of visit to Cominco Smelter, Trail, B. C., Canada, April 16, 1973.

18. Semrau, K. T.; "Sulfur Oxides Control and Metallurgical Technology"; Journal of Metals; 41-47; March 1971.

19. King, R. A.; "Economic Utilization of Sulfur Dioxide from Metallurgical Gases;" Industrial and Engineering Chemistry; Vol. 42, No. 11; 2241-2248; 1950.

20. Player, E. G. N.; Consulting Engineer, Sulfur Recovery, Cominco; Response to Questionnaire Regarding Ammonia Scrubbing Systems; March 5, 1973.

21. Semrau, K. T.; "Control of Sulfur Oxide Emissions from Primary Copper, Lead, and Zinc Smelters-A Critical Review"; Journal of The Air Pollution Control Association; Vol. 21, No. 4; 185-194; April 1971.

22. Jacobs, R. T.; Report of Visit to Cominco Lead and Zinc Smelter; Trail, B. C., Canada; September 9, 1971.

23. Carey, D. F.; Report of Visit to Allied Chemical Corporation; Newell, Pennsylvania; July 26, 1972.

24. Rovang, R. D.; Report of Visit to Olin Chemical Company; Beaumont, Texas; July 21, 1973.

25. Stanford Research Institute Final Report to EPA, "Feasibility Study of New Sulfur Oxide Control Processes for Application to Smelters and Power Plants; Part II: The Wellman-Lord SO_2 Recovery Process for Application of Smelter Gases," Contract No. CPA 22-69-78.

26. Wellman-Lord, Inc., "SO_2 Recovery by Wellman-Lord."

27. Schneider, R. T. and Earl, C. B.; "Application of the Wellman-Lord SO_2 Recovery Process to Stack Gas Desulfurization; Paper Presented at the Environmental Protection Agency; Flue Gas Desulfurization Symposium, New Orleans, La., May 1973.

28. Craig, T. L. and R. O. Dhondt; "Trail Gas Desulfurization Operations Successful;" The Oil and Gas Journal; 65-67; February 7, 1972.

29. Potter, B. H. and T. L. Craig; "Commercial Experience with an SO_2 Recovery Process;"Chemical Engineering Progress; Vol. 68, No. 8; 53-54; August 1972.

4.4 PARTICULATE REMOVAL SYSTEMS

The design of gas cleaning equipment is primarily based on particle and carrier gas characteristics, and process and operating factors. Important particle characteristics are size distribution, shape, density, and such physio-chemical properties as hygroscopicity, agglomerating tendency, corrosiveness, "stickiness," flowability, electrical conductivity, flammability, and toxicity.[1] Ease of maintenance and the need for continuity of operation are operating factors which should be considered. Important construction factors include available floor space and headroom and construction material limitations imposed by the temperature, pressure, and/or corrosiveness of the exhaust gas stream.

Information on the particle size gradation in the inlet gas stream is very important in the proper design of gas cleaning equipment. Particles larger than 50 microns can be removed in inertial and cyclone separators or simple, low-energy wet scrubbers. Particles smaller than 50 microns require either high-efficiency (high-energy) wet scrubbers, fabric filters, or electrostatic precipitators.[2]

Wet scrubbers operate at variable efficiencies directly proportional to the energy expended and can handle changing effluent flow rates and characteristics. Disadvantages of wet scrubbers are (1) the scrubber liquor may require treatment, (2) the power requirements are high, and (3) a visible plume may be emitted. Fabric filters more readily permit reuse of the collected material and can collect combustible and explosive dusts. They do, however, have temperature limitations and are sensitive to process conditions. Electrostatic precipitators

can operate at relatively high temperatures, have low pressure drop, low power requirements, and few moving parts. They are, however, sensitive to variable dust loadings or flow rates and, in some cases, require special safety precautions.

The performance of various gas cleaning devices differs widely depending upon the particular application. Grade efficiency curves for selected gas cleaning devices are shown in Figure 4-8.[3,4] Though Figure 4-8 is based on silica dust emissions, it is important to note the collection efficiencies of the various systems in the lower micron regions (<10 microns). In this region fabric filters, high-energy scrubbers and dry electrostatic precipitators are the most efficient. Various analyses of particle size distribution of the particulate matter entrained in the off-gas streams from lead blast furnaces and zinc sintering machines indicate that most of the particulate matter is less than 10 microns in diameter.[5,6] This small particle size of particulate emissions from smelter installations, which would result in high energy requirements for a high-efficiency scrubbing system to limit particulate emissions, is probably one of the major reasons why scrubbing systems have not found widespread application in the smelting industry. Consequently, as discussed in Section 5, fabric filters and electrostatic precipitators are the most widely employed particle emission control systems within the smelting industry. The following discussions will therefore concentrate on those systems.

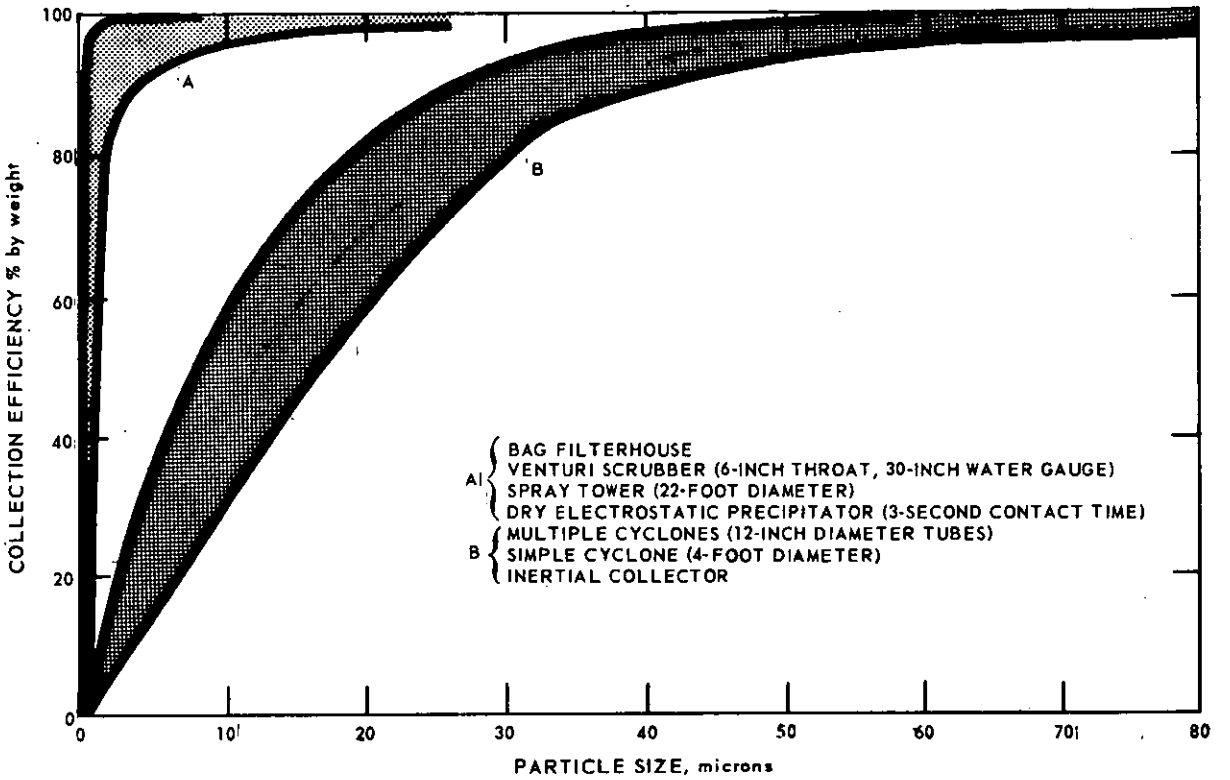

Figure 4-8. Composite grade (fractional) efficiency curves based on test silica dust.

Fabric filtration is one of the oldest and most positive methods used for the collection of particles from gases. Fabric filters are typically used for high-efficiency (99+%) particle removal. Their principal limitation is temperature with a maximum of about 500°F.[2] Currently, baghouses containing industrial fabric filters are used for particulate control on all of the blast furnaces and five of the six sintering machines of the domestic primary lead smelting industry, and on three of the four zinc sulfide sintering machines within the domestic primary zinc smelting industry.

Fabric filters for cleaning smelter gases are of both the bag and envelope types. A wide range of filtering materials including woven or felted fabric and natural or synthetic materials is utilized.

The particulate matter is removed from the gas stream by impinging on or adhering to the fibers. The filter fibers are normally woven with relatively large open spaces, sometimes 100 microns or larger. Consequently, the filtering process is not one of simple fabric sieving, as evidenced by the fact that high collection efficiencies for dust particles of 1 micron or less have been achieved. Small particles are initially captured and retained on the fiber of the fabric by direct interception, inertial impaction, diffusion, electrostatic attraction, and gravitational settling. Once a mat or cake of dust is accumulated, further collection is accomplished by mat or cake sieving as well as by the above mechanisms. Periodically the accumulated dust is removed, but some residual dust remains and serves as an aid to further filtering.

Air flow in fabric filtration is usually laminar. Direct interception occurs whenever the fluid streamline, along which a particle approaches a filter element, passes within a distance from the element equal to or less than one-half the particle diameter. If the particle has a very small mass, it will not deviate from the streamline as the streamline curves around the filter element, but because of electrostatic forces, it will be attracted to and adhere to the filter element if the streamline passes sufficiently close to the element.

Inertial impaction occurs when the mass of the particle is so great that it is unable to follow the streamline rapidly curving around the filter element and continues along a path of less curvature, so that the particle comes closer to the filter element than it would have come if it had approached along the streamline. Collision occurs because of this inertia effect even when flow line interception would not take place. Impaction is not a significant factor in collecting particles of 1 micron diameter or less. Impaction becomes a collection factor only as particle size increases.

In smelting operations a baghouse is normally chosen as the particulate removal device when SO_3 concentration and chloride content of the effluent gases are low. High SO_3 concentrations are known to produce corrosion and deterioration of both the baghouse structure and the filter fabric. These phenomena have been experienced in some cases by the primary copper, zinc and lead smelting industries in attempts to employ both standard and fiberglass fabrics to various off-gases. Chlorides contained in feed materials will produce hygroscopic effects on fabric filters. The chloride compounds, such as copper, zinc, and lead chloride,

contained in these gas streams act as dessicant materials and can produce a sticky material which tends to blind and eventually tear the filter fabric. Filtration temperatures must also be carefully maintained (usually below 275°) in order to assure that the filter fabrics are not damaged. With close control of inlet gas temperatures, the formation of potentially harmful chemical substances such as sulfuric acid mist and metal chlorides can be minimized to acceptable levels. An analysis of the fume and particulate matter collected at the New Jersey Zinc Company's Palmerton, Pennsylvania, Waelz oxide sinter plant revealed a metal chloride content of up to 4.5%. The concentration of sulfur dioxide in the gas stream was approximately 1000 ppm,[8,9] which is similar to what would be expected from sulfide circuit sintering emissions. To minimize the formation of harmful chemicals in the gas stream, the Waelz sinter plant baghouse inlet temperature is closely controlled by the use of both a gas preheater and dilution with outside cooling air.

Electrostatic precipitation is an effective technique for removing both solid and liquid particles from gas streams. It has the advantage over most other control systems of permitting either dry or wet collection of small particles. Fabric filter baghouses might be considered the first choice for a solid particulate emission control system; however, as the process gas stream increases in temperature to the threshold of baghouse operation, electrostatic precipitators gain more acceptance. Currently, electrostatic precipitators are used on all the roasters, reverberatory furnaces, and converters of the primary domestic copper smelting industry. Three of the five domestic primary zinc smelters which practice sintering use electrostatic precipitators, and one of

six currently operating primary lead sintering operations employs an electrostatic precipitator for particulate control.

Electrostatic precipitators are normally used when the larger portion of the particulate matter to be collected is smaller than 20 microns in mean diameter. When particles are large, centrifugal collectors are sometimes employed as precleaners. Gas volumes handled are normally in the range of 50,000 to 2,000,000 cubic feet per minute. Operating pressures range from slightly below atmospheric pressure to 150 pounds per square inch gauge and operating temperatures normally range from ambient air temperatures to 750°F.

Separation of suspended particulate matter from a gas stream by high-voltage electrostatic precipitation requires three basic steps:

1. Electrical charging of the suspended matter.
2. Collection of the charged particulate matter on a grounded surface.
3. Removal of the particulate matter to an external receptacle.

A charge may be imparted to particulate matter prior to the electrostatic precipitator by flame ionization or friction; however, the bulk of the charge is applied by passing the suspended particles through a high-voltage, direct-current corona. The corona is established between an electrode maintained at high voltage and a grounded collecting surface. Particulate matter passing through the corona is subjected to an intense bombardment of negative ions that flow from the high-voltage electrode to the grounded collecting surface. The particles thereby become highly charged within a fraction of a second and migrate toward the grounded collecting surfaces. This attraction is opposed by inertial and friction forces.

After the particulate matter deposits on the grounded collecting surface, adhesive, cohesive, and primary electrical forces must be sufficient to resist any action or counter-electrical forces that would cause reentrainment of the particulate matter. Free flowing liquids are removed from the collecting surface by natural gravity forces. The particulate matter is dislodged from the collecting surfaces by mechanical means such as by vibrating with rappers or by flushing with liquids. The collected materials fall to a hopper from which they are removed.

Although EPA has found in many industries that well-designed, high-efficiency electrostatic precipitators are effective in limiting emissions of particulate matter, in most cases the electrostatic precipitators that have been installed within the domestic primary copper, zinc and lead smelting industries have been of relatively low efficiency (80-90 percent or less). Consequently, EPA has not conducted an emissions test on an electrostatic precipitators operating within the domestic copper, zinc and lead smelting industry since no precipitator currently in operation was found to exhibit the best available technology.

In July 1972, EPA carried out an emission test on a fabric filter baghouse operating on the lead blast furnace at the ASARCO lead smelter in Glover, Missouri. The average particulate emission concentration (probe washings and filter catches only) was determined to be about 32 milligrams per dry normal cubic meter (0.014 gr/dscf).[11]

In February 1974, EPA carried out an emission test on a fabric filter baghouse operating on a Waelz zinc oxide sintering machine at the New Jersey Zinc Company's primary zinc smelter in Palmerton, Pennsylvania. The particulate emission results were considered invalid, however, due to a malfunction within the control system. A defective valve within the baghouse system permitted a significant portion of the emission stream to bypass the filtering area and proceed untreated to the sampling location.

The secondary lead and brass and bronze industries have also been tested by EPA for particulate emissions. Particulate matter from a brass or bronze furnace consists of not only combustion products from fuels but also particulate matter in the form of dust and metallic fumes.[13] The fume results from the condensation and oxidation of volatile elements including lead and zinc. A similar situation exists in secondary lead refining where the metallic fume emitted is principally lead oxide. In both cases the particle size of the metal oxides range between 0.03 and 0.3 micron.[13] This particle size range is similar to that of primary smelting operations.

Average emissions from typical secondary lead and brass and bronze facility tests at those sites utilizing baghouses for particulate control are 0.01 and 0.008 gr/dscf, respectively.[12] Table 4-7 gives a tabulation of applicable secondary industry baghouse test results conducted by EPA.

Table 4-7. Baghouse Emission Test Results[11,12]

Type Smelter	Production System	Control System	Test Results 1	2	3	Average (gr/dscf)	(mg/dNm^3)
Primary lead	Blast furnace & Dross Reverb.	Baghouse	.016	.008	.017	.014	32
Secondary lead	Blast furnace	Baghouse	.02	.008	.015	.014	32
Brass & Bronze	Blast furnace	Baghouse	.006	.009	.01	.008	18
Secondary lead	Reverberatory furnace	Baghouse	.005	.003	.004	.004	9
Secondary lead	Reverberatory furnace	Baghouse	.003	.004	.005	.004	9
Brass & Bronze	Reverberatory furnace	Baghouse*	.018	.017	.008	.014	9

*Fifteen test runs were made. The three highest results are reported.

References for Section 4.4

1. Stephan, D.G. "Dust Collectors Review." Trans. Foundrymen's Soc. Vol. 68, pp. 1-9, 1960.

2. Stairmand, C.J. "Removal of Grit, Dust and Fume from Exhaust Gases from Chemical Engineering Processes." Chem. Eng., pp. 310-326, December 1965.

3. Stairmand, C.J. "Design and Performance of Modern Gas-Cleaning Equipment." Inst. of Fuel, Vol. 29, pp. 58-76, February 1956.

4. Duprey, R.L. "Particulate Emission and Size Distribution Factors." U.S. Dept. of Health, Education and Welfare, National Center for Air Pollution Control, Durham, North Carolina, May 1967 (Prepared for: New York-New Jersey Air Pollution Abatement Activity).

5. Harris, D.B. and Dennis C. Drehmel. "Fractional Efficiency of Metal Fume Control as Determined by Brink Impactor." Presented at the 66th Annual Meeting of the Air Pollution Control Association, Chicago, Illinois, June 24-28, 1973.

6. Midwest Research Institute, Source Testing, EPA Task No. 27, ASARCO, Glover, Missouri, EPA Contract No. 62-02-0228.

7. Sargent, G.D. "Gas/Solid Separations." Chem. Eng., February 15, 1971, pp. 11-22.

8. The New Jersey Zinc Company Technical Group Memorandum No. 69-128, "Ferroalloy Sinter Plant Stack Emission," Palmerton, Pa., Nov. 18, 1969.

9. The New Jersey Zinc Company Technical Group Memorandum "Fume Analyses," Palmerton, Pa., Jan. 8, 1974.

10. Engineering Memorandum "Waelz Sinter Fume Collection Bagroom - Description of Operation," Palmerton, Pa., May 18, 1973.

11. Midwest Research Institute, Source Test, EPA Task No. 27, ASARCO, Glover, Missouri, EPA Contract No. 62-02-0228.

12. Background Information for Proposed New Source Performance Standards, Vol. 2, Appendix - Summaries of Test Data, EPA/OAWP/OAQPS, Research Triangle Park, North Carolina 27711, June 1973.

13. "Air Pollution Engineering Manual." EPA/OAWP/OAQPS, Research Triangle Park, North Carolina 27711, Second Edition, Edited by John A. Danielson, May 1973.

General Reference

14. "Control Techniques for Particulate Air Pollutants." U.S. Dept. of Health, Education and Welfare, PHS-EHS, January 1969.

5. SURVEY OF DOMESTIC AND FOREIGN PRIMARY COPPER, ZINC AND LEAD SMELTERS

Currently, the United States annual consumption rate of nearly 5.1 million short tons of copper, zinc, and lead[1] is partly satisfied by the production of these metals at 29 primary facilities. This section investigates these existing operations by discussing the current processing and emission control equipment used, the atmospheric emissions of SO_2 and particulate produced, and some pertinent process parameters calculated for each primary facility. Future plans, as envisioned by these facilities as of mid-1973, for air pollution abatement are also presented. Some of the plans cited have been completed and others have been altered as of mid-1974, but no attempt has been made to update the information of this chapter to reflect changes after mid-1973. Reference is made to existing smelter emission control regulations.

5.1 PRIMARY COPPER SMELTERS

5.1.1 *Domestic Copper Smelters*

As shown by Figure 5-1, the fifteen existing domestic primary copper smelters are mainly concentrated in the southwestern section of the United States. Michigan, Montana, Nevada, New Mexico, Tennessee, Texas, Utah, and Washington contain one copper smelter each, while seven smelters are located in Arizona. The high density of copper extraction facilities in Arizona is primarily due to the local availability of copper ore.

A compilation of data, including plant age and most recent major modification, materials processed and produced, process and emission control equipment, stack parameters, and emission data, is presented in Table 5-1 for each of the fifteen existing primary copper smelters.

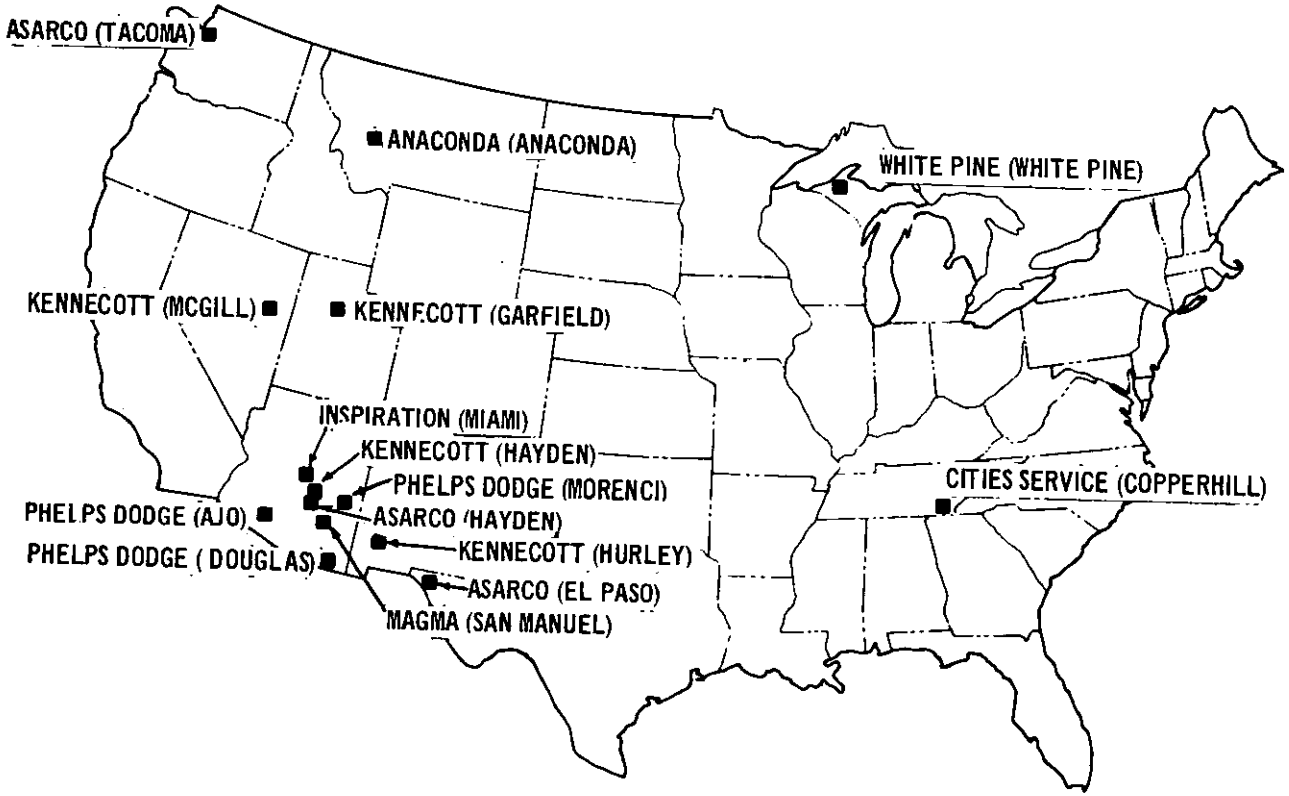

Figure 5-1 Existing domestic primary copper smelters.

TABLE 5.1. EXISTING U.S. COPPER SMELTERS[2]

COMPANY	AGE OF PLANT		MATERIALS		PRODUCTION EQUIPMENT						STACK DATA					
					ROASTERS		SMELTING FURNACES		CONVERTERS						EMISSION RATE	
NAME/LOCATION	FIRST YEAR	LAST MODIFICATION	CONC. (T/D)	BLISTER CU (T/D)	NO. OF OPER/STBY	GAS STREAM CONTROL EQUIPMENT	NO. OF OPER/STBY	GAS STREAM CONTROL EQUIPMENT	NO. OF OPER/STBY	GAS STREAM CONTROL EQUIPMENT	NO. OF	HEIGHT (ft)	FLOW RATE (SCFM)	SO_2[4] CONC. (ppm)	PARTIC. (T/D)	SO_2 (T/D)
1) ASARCO/Tacoma, Wash.	1890	1973 (Liquid SO_2 plant for converter under const.)	1200	300 (Electrolytically refined Cu)	5/5	Roaster gases join reverb gases prior to treatment.	1/1	Reverb gas combined with roaster gases, then to 2 ESP's in series (98.4%).[3]	3/1	18% of gas to 1950 Monsanto 150 T/D acid plant, tail gas to roaster flue. 82% of gas (116,000 SDCFM) to ESP (94.3%)[3] then to roaster flue.	1 (tail gas, roaster, furnace, some converter)	563[3]	450,000[3]	7000	2.04[3]	383[3]
2) ASARCO/Hayden, Arizona	1912	1971 (New converter acid plant)	2000	366	7/5	Roaster gases join reverb gases prior to treatment.	2/0	Reverb gas thru W.H.B.'s and water spray chamber, then joined with roaster gases. Combined gases to ESP (98.3%)[3] and 300 ft. stack.	4/1	All converter gases to 1971 Rust Engineering 750 T/D acid plant.	1 (roaster, furnace) 1 (tail gas)	300 30	403,000[3] 81,200[3]	5900 2200	1.5[3] <0	290[3] 21.8[3]
3) ASARCO/ El Paso, Texas	1905	1973 (New converter acid plant, under const.)	700	260 (Anode Cu)	4/3	Roaster gases (110,000 SCFM) pass thru settling flue, then join reverb gases.	1/0	Reverb gas pass thru W.H.B. and settling flue, then join roaster gases, then to spray chamber, ESP (98.6%),[3] and combined with treated converter gases.	3/0	Converter gases pass thru settling flue and ESP (91.7%),[3] then join roaster and reverb gases, all out 828 ft. stack.	1 (roaster, furnace, converter)	828	720,000[4]	4500	3.5[3]	400[3]
4) Phelps Dodge/ Douglas, Ariz.	1910	1971 (New ESP on converters)	2260	365 (Anode Cu)	17/7	Roaster gases treated by ESP and then join reverb gases.	3/0	All reverb gases treated in W.H.B., then join roaster gases and pass out 544 ft. stack.	3/2	Converter gases treated in ESP, then passed out 563 ft. stack.	1 (roaster, furnace) 1 (converter)	544 556[5]	470,000[5] 264,000[5]	15,700 15,200	39[5] 9[5]	902[5] 492[5]
5) Phelps Dodge/ Morenci, Ariz.	1942	1964 (Roaster acid plant)	2113	470 (Anode Cu)	1/0	All roaster gases to Parsons 750 T/D acid plant.	4/0	Reverb gases treated in two ESP's in parallel (78.5%).[5]	8/0[6]	Converter gases treated in ESP (98.5%).[3]	1 (tail gas, furnace) 1 (converter)	600[5] 600[5]	310,000[5] 406,000[5]	14,000 15,400	14.7[5] 0.8[5]	526[5] 768[5]
6) Phelps Dodge/ Ajo, Ariz.	1950	1972 (DMA & acid plants)	680	197 (Anode Cu)	None	-	1/0	Reverb gases join converter gases, then to ESP and 360 ft. stack.	2/0[6]	Converter gases join reverb gases, then to ESP and 360 ft. stack.	1 (furnace, converter)	360[5]	397,000[5]	7000	0.7	380[5]
7) Magma/ San Manuel, Ariz.	1956	-	1700	310 (Anode Cu)	None	-	2/0	Reverb gases treated in W.H.B. and ESP (89%),[6] then out 515 ft. stack.	5/0	Converter gases passed thru ESP (95%),[6] then to 550 ft. stack.	1 (furnace) 1 (converter)	515 550	175,000[6] 117,000[6]	15,000 54,000	1.79[6] 0.54[6]	313[7] 767[7]
8) Kennecott/ Hurley, N.M.	1939	1971 (New fourth converter added)	767	234	None	-	1/1	Reverb gases treated by W.H.B. balloon flue, ESP (95%), and 500 ft. stack.	3/1	Converter gases treated in 85% multiclone and passed out 626 ft. stack.	1 (furnace) 1 (converter)	500 626	81,000[9] 90,000[9]	26,000 35,000	0.75[10] 2.8[10]	210[10] 386[10]
9) Kennecott/ McGill, Nev.	1907	-	750	185	None	-	2/0	Reverb gases treated by W.H.B. settling flue, (9) ESP (70-85%), then out 300 ft. stack.	3/1	Converter gases treated by multiclone and balloon flue (85%)[9] out 340 ft. stack.	1 (furnace) 1 (converter)	300 340	261,000[9] 271,000[9]	5800[8] 11,300[8]	9.1 3.9	185[9,11] 375[9,11]

TABLE 5.1. EXISTING U.S. COPPER SMELTERS (CONTINUED)

COMPANY	AGE OF PLANT		MATERIALS		PRODUCTION EQUIPMENT						STACK DATA					
					ROASTERS		SMELTING FURNACES		CONVERTERS						EMISSION RATE	
NAME/LOCATION	FIRST YEAR	LAST MODIFICATION	CONC. (T/D)	BLISTER CU (T/D)	NO. OF OPER/STBY	GAS STREAM CONTROL EQUIPMENT	NO. OF OPER/STBY	GAS STREAM CONTROL EQUIPMENT	NO. OF OPER/STBY	GAS STREAM CONTROL EQUIPMENT	NO. OF	HEIGHT (ft)	FLOW RATE (SCFM)	SO_2(5) CONC. (ppm)	PARTIC. (T/D)	SO_2 (T/D)
10) Kennecott/ Hayden, Ariz.	1958	1968 (Fluid bed roaster and acid plant)	1050	220	1/0	All roaster gases pass thru cyclones and ESP (50%), then join 50% of converter gases and pass through 1968 Monsanto 750 T/D acid plant.	1/0	Reverb gases treated by W.H.B., mixed with 50% of converter gases, passed thur ESP (95%) and 600 ft. stack.	2/1	Converter gases pass thru balloon flue, then: 50% of gases mixed with reverb gases, and 50% of gases treated in ESP (95%) and added to roaster gases.	1 (tail gas) 1 (furnace, 50% converter)	100 600	75,000(12) 211,000(9)	1300 7250	~0 1.1(12)	12(12) 187(8)
11) Kennecott/ Garfield, Utah	1907	1968 (Removed roasters and converted to green-feed reverbs)	2200	750	None	-	3/0	Reverb gases treated by W.H.B. and ESP (50%), then out two 410 ft. stacks.	7/2	All converter gases enter ESP (60-70%), then 97.5% of gases treated in five acid plants (1400 T/D H_2SO_4), and out five acid plant stacks.	2 (furnace) 5 (tail gas)	408(13) 95,95,87, 82 126(13)	1,187,000(13) 259,000(13)	3500 1000	4.33(8) 0.46(8) (acid plant by-pass flue)	323(8) 32(13)
12) Anaconda/ Anaconda, Montana	1906	1973 (New acid plant)	1710	500 (Anode Cu)	None	Roasters exist, but for drying concentrate only.	3/1	Reverb gases pass thru water spray chamber and flue, then join converter gases.	6/0	Converter gases join reverb gases, pass thru settling flue and ESP (36.9%),(15) then out stack.	1 (furnace, converter)	925(15)	1,950,000(5, 14)	3300(14)	22.5(14)	790(5)
13) White Pine/ White Pine, Michigan	1955	-	700	220	None	-	1/1	Reverb gases treated by W.H.B. and two ESP's in series, join converter gases, and pass out 500 ft. stack.	1/1	Converter gases join reverb gases and pass out 500 ft. stack.	1 (furnace, converter)	500	169,000	4700	2.4	97
14) Cities Service/ Copperhill, Tennessee	1845 (Intermittent)	1972 (SO_2 treatment of electric furnace reverb gases)	300	50	1/0	Roaster gases (6000 SCFM) treated by cyclones, combined with converter gases, then to wet scrubber, joined with iron roaster off-gas, then cooler-scrubber, ESP, and to four acid and one liquid SO_2 plants.	1/0	Electric furnace gases mix with other plant gases, then to acid plants.(3)	1/0	All converter gases (0-14,000 SCFM) join roaster gases, then to acid plants.	3 (tail gas)	200,200, 160	Mixed with iron off-gas	1000-5000	~0	Unknown
15) Inspiration/ Miami, Ariz.	1915	1972 (Elect. furnace, syph. conv., acid plant under const.)	840	300	None	-	1/0	Reverb gases pass thru W.H.B.'s, flue, and 275 ft. stack.	3/1	Converter gases treated by balloon flue to 200 ft. stack.	1 (furnace) 1 (converter)	275(16) 200(16)	260,800(16) 163,400 (16)	2500 (16) 15,200(16)	Unknown Unknown	78(17) 296(17)

The remainder of the discussion contained in Section 5.1 is either taken directly from or calculated from this table.

As described in Section 3.1.1, two conventional copper extractive processes are utilized by these existing smelters. The first process occurs in three steps: roasting, smelting, and converting. Generally, primary facilities that process numerous copper concentrates containing various amounts of constituents employ this practice. Currently, seven of the existing fifteen copper smelters are in this first category. The roasting step is performed at four smelters by means of multiple-hearth roasters, whereas the remaining three facilities employ fluid-bed roasters. Averaging the copper roasting applications existing in the United States, one multiple-hearth roaster is used to roast approximately 190 tons per day of copper concentrate, and about 1150 tons per day are processed by each fluid-bed roaster.

The second process, used by the remaining eight operating facilities, occurs in two steps: smelting and converting. Uniform consistency of concentrate constituents is the primary reason for smelting the copper concentrates directly without the prior roasting step.

For either process, the reverberatory furnace performs the smelting step at fourteen of the fifteen smelters. The one remaining smelter employs an electric furnace. An average of 640 tons per day of copper calcine and concentrate are smelted in each of a total of 26 operational reverberatory furnaces. The one existing

electric furnace processes approximately 250 tons per day of copper calcine.

All fifteen domestic copper smelters employ the Pierce-Smith converter for the conversion of furnace matte to converter slag and blister copper. Each of a total of 54 converters is used to process an average of approximately 300 daily tons of furnace matte. An average of 3.6 operating converters, with a range of from one to eight converters, is used at each primary smelter.

Figure 5-2 presents the above process equipment statistics for the fifteen existing copper smelters.

Particulate matter is emitted from the roaster, furnace, and converter process operations. Current particulate control practices include the usage of multiclones, balloon flues, and electrostatic precipitators. Control efficiencies vary from an estimated 30 to 99 percent. Replacement of old, low-efficiency particulate removal devices with high-efficiency electrostatic precipitators is underway at many of the existing smelters.

Control of sulfur oxide emissions from this industry has primarily been through the application of single-contact sulfuric acid plants. Of the four smelters that employ multiple-hearth roasters, all of the roaster process effluents are emitted to the atmosphere without SO_2 control. Each of the three smelters utilizing fluid-bed roasters limits the SO_2 emission from this effluent by means of a sulfuric

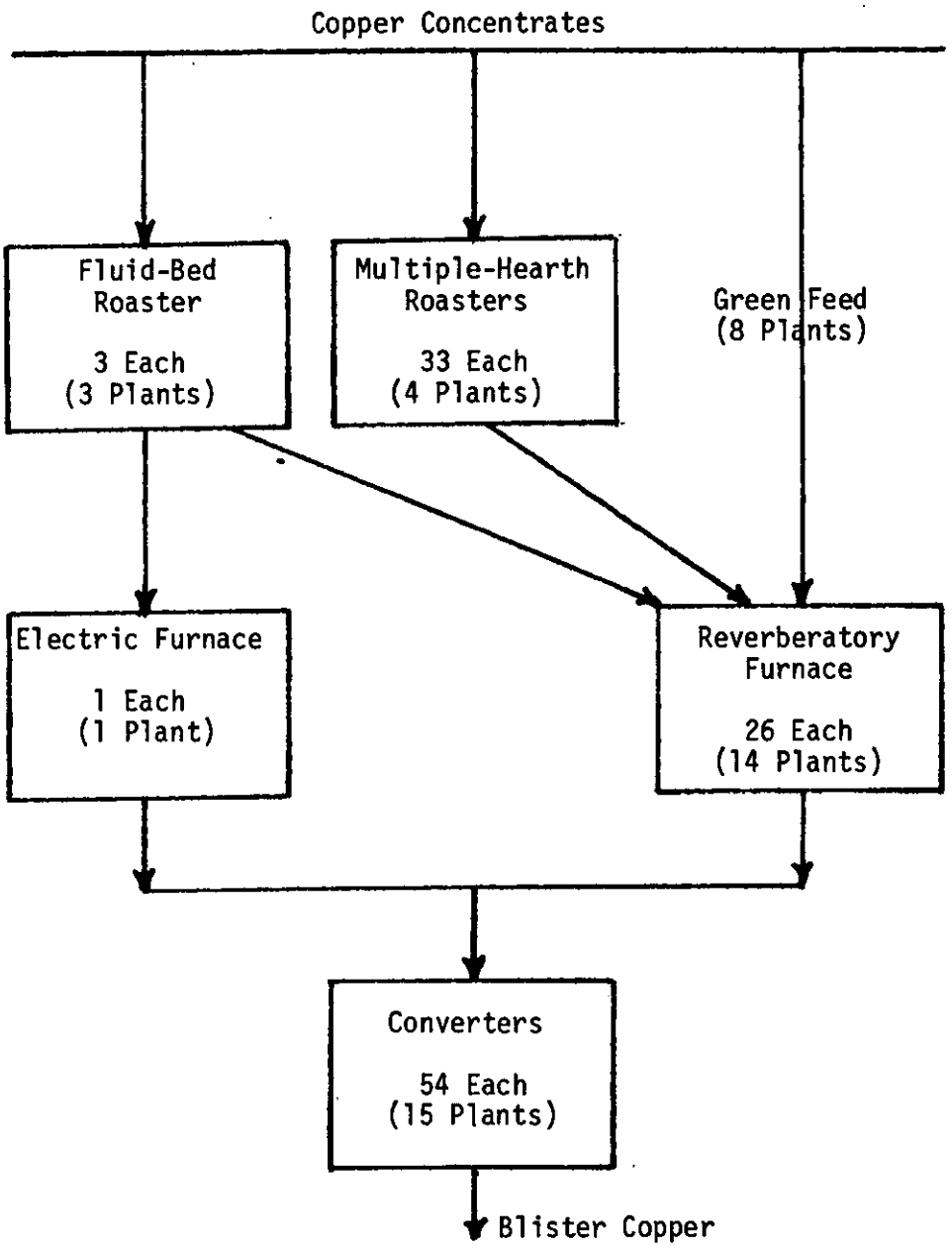

Figure 5-2. Process equipment used by existing domestic primary copper smelters.

acid plant. All of the weak-stream effluents from the industry's reverberatory furnaces are at present discharged to the atmosphere without recovery of SO_2. The one smelter that employs an electric furnace combines this process effluent with copper roaster and converter gases, as well as pyrite process gases, and treats the entire effluent in a dimethylaniline scrubbing system, a liquid SO_2 plant and several sulfuric acid plants. Currently, only five U.S. primary copper smelters limit the emissions of SO_2 from copper converters. At these smelters, sulfur is recovered by the production of sulfuric acid by means of single-contact sulfuric acid plants.

Illustrated in Figure 5-3 is the current status of SO_2 control at the existing primary copper smelters as of mid-1973. In summary, only nine of the possible 37 process effluents generated by the domestic industry are subjected, either wholly or in part, to SO_2 emission control.

Fugitive emissions of sulfur dioxide are discharged to the atmosphere from numerous sources within the smelter complex.[18] Such discharge sources include hot roaster calcine transfer points; reverberatory furnace feed and discharge areas; converter roll-out; leaky flues, ducts, and stacks; and low-level stacks, such as some acid plant tail-gas stacks. The magnitude of the fugitive emissions has been reported to range from 0 to 12 percent of the total amount of SO_2 generated by the smelter. Currently, exact methods for quantification of fugitive SO_2 emissions are not known. Several of the existing smelters are presently installing hooding over troublesome areas where fugitive emissions occur. This hooding will allow some of the fugitive emissions to be emitted to the atmosphere from a higher release point, which should, in turn, reduce ground-level SO_2 concentrations.

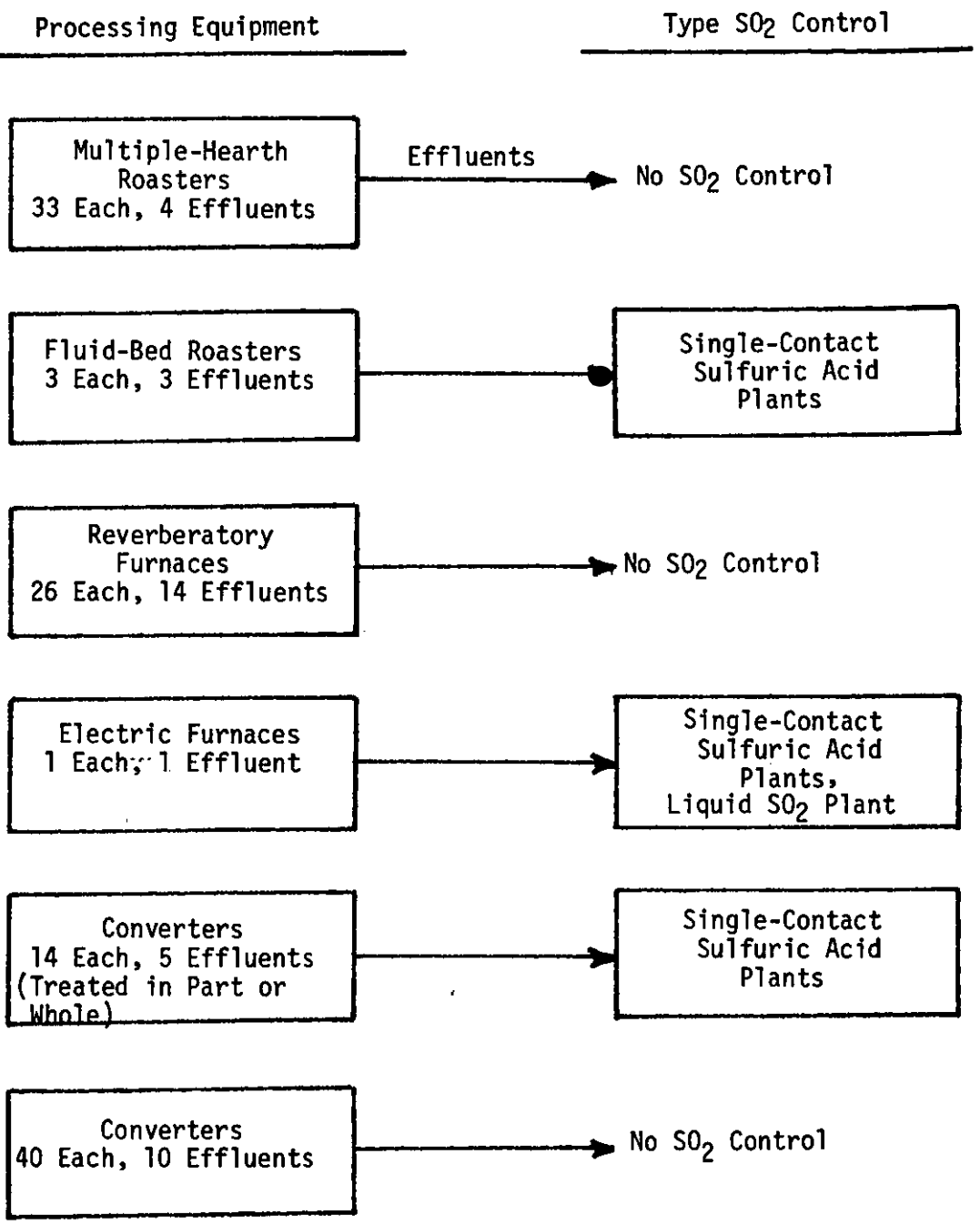

Figure 5-3. Current status of SO_2 control at existing primary copper smelters.

Tabulated in Table 5-1 are estimates of particulate and SO_2 mass emission rates for each of the fifteen existing copper smelters. These balances have been obtained from industrial responses to EPA questionnaires and from other referenced communications with industrial representatives. The mass particulate emission rate varies from essentially zero to approximately 22 tons/day, and averages 5.8 tons/day. The broad range indicated depends directly on the degree of particulate control existing at the facility.

The mass emission rate of SO_2 varies from a very small amount, which has not yet been determined (tail gas from acid plants and dimethylaniline unit at Cities Service, Copperhill, Tennessee), to a high of approximately 1400 tons/day. Numerous factors dictate the magnitude of the SO_2 atmospheric emissions emanating from each of the 15 existing smelters:

1) The tonnage of concentrate processed per day.
2) The sulfur content of the concentrate.
3) The type of pyrometallurgical process employed (i.e., roasting-smelting-converting or smelting-converting).
4) The degree of sulfur removal for each pyrometallurgical process step.
5) The amount of sulfur entering the extraction process which is retained as a solid constituent of discarded slag.
6) The degree of SO_2 emission control employed.

The amount of copper concentrate processed at each of the existing smelters varies from 300 to 2260 tons/day, with an average of approximately 1300 tons/day. The sulfur content of these concentrates averages around 32 percent and ranges from a low of 8 percent to a high of 38 percent.

Factor numbers 3 and 4 above are intrinsically associated by the type or types of copper concentrate processed at each smelter. The degree of sulfur removal for each processing step is dependent upon the metallurgical goals of that step and will vary from smelter to smelter. Of the total SO_2 generated by each existing smelter, the allocation of the generated SO2 is, on the average, attributed to: [19]

Roasting	Furnacing	Converting	Fugitive
32.2%	18.6%	43.1%	6.1%
	Furnacing	Converting	Fugitive
	31.2%	68.5%	0.3%

Significant variations of each of the above percentages do occur on a plant-by-plant basis. Losses of input sulfur to slag vary from one to three percent of this input amount. Thus, the remaining 97 to 99 percent of the input sulfur can ultimately become uncontrolled atmospheric emissions of SO_2, unless emission control is employed. As stated previously, only nine of the 37 primary smelter process effluents have SO_2 control either in part or whole. This amount of control allows an average of approximately 550 tons/day of SO_2 to be emitted for each copper smelter. On a process weight basis, this average mass emission rate is equivalent to about 0.425 tons of SO_2 emitted/ton of copper concentrate processed or 1.75 tons of SO_2 emitted/ton of blister copper produced. In summation, if the average copper concentrate were assumed to contain 32 percent sulfur, the current overall degree of SO_2 emission control would be equivalent

to 33 percent.

Numerous control regulations limiting the atmospheric emission of sulfur dioxide from existing primary copper smelters have been or are being adopted by state and local air pollution control agencies.[20] As of mid-1973, mass emission rate standards require from 60 to 90 percent control of sulfur fed to an existing smelter, and stack concentrations of from 500 to 2000 parts per million (ppm) SO_2 are required in other regulations. A third type of regulation, requiring compliance to a set of ambient air quality standards, is also used. The Environmental Protection Agency is currently developing regulations to correct the deficiencies contained in six state implementation plans for smelters. The state implementation plans were deficient in that they did not provide for the attainment of the national ambient air quality standards.[21]

In order to comply with existing or pending SO_2 regulations, many of the primary copper smelters have initiated plans or are in the process of construction and start-up of SO_2 control devices. Federal, state, and local air pollution control officials have indicated that some of these actions include the following as of mid-1973:

Status	Action
1) Start-up	Electric furnace, siphon converters, and one double-contact sulfuric acid plant to handle all furnace and converter gases. This system will replace old existing smelter.[22] (Inspiration-Miami, Arizona)
2) Start-up	Water-cooled hoods on converters (which will allow less air infiltration at hood-converter interface and, in turn, increase converter effluent

	SO_2 concentration), dimethylaniline to concentrate SO_2 contained in reverberatory furnace gases, and one single-contact sulfuric acid plant to handle all furnace and converter gases.[22] (Phelps Dodge-Ajo, Arizona)
3) Start-up	One double-contact sulfuric acid plant to control entire converter effluent. (ASARCO-El Paso, Texas)
4) Under construction	One double-contact sulfuric acid plant to treat a portion of the converter effluent. (Anaconda-Anaconda, Montana)
5) Under construction	Dimethylaniline to concentrate SO_2 in remainder of converter effluent (portion of converter effluent currently treated by single-contact sulfuric acid plant). Concentrated SO_2 stream sent to liquid SO_2 plant. (ASARCO-Tacoma, Washington)
6) Under construction	Single-contact sulfuric acid plant to recover SO_2 from entire converter effluent. (Kennecott-Hurley, New Mexico)
7) Under construction	New ducting and water-cooled hoods on converters, entire converter effluent to single-contact sulfuric acid plant.[22] (Magma-San Manuel, Arizona)
8) Under construction	Water-cooled hoods on converters and expansion of existing single-contact sulfuric acid plant to treat entire roaster and converter effluents (acid plant currently treats entire roaster effluent and portion of converter effluent).[22] (Kennecott-Hayden, Arizona)

9) Under construction	Single-contact sulfuric acid plant to treat entire converter effluent. Also adding one new converter and one new reverberatory furnace to existing process.[22] (Phelps Dodge-Morenci, Arizona)
10) Under construction	Water-cooled hoods on converters, single-contact sulfuric acid plant to treat entire converter effluent, and taller stack. (Kennecott-McGill, Nevada)
11) Under construction	1000 foot stack for all untreated (SO_2) roaster and reverberatory furnace effluents. New stack will replace existing 300-foot stack.[22] (ASARCO-Hayden, Arizona)
12) Planning	Water-cooled hoods on all converters, blend 50 percent of reverberatory furnace effluent with entire converter effluent and treat all with existing single-contact sulfuric acid plants. (Kennecott-Garfield, Utah)
13) Planning	Usage of double-contact sulfuric acid plants, sodium sulfite-bisulfite scrubbing, or molecular sieve to reduce tail gas concentration from existing sulfuric acid plants to below 500 ppm. (Cities Service-Copper Hill, Tennessee)
14) No plans	Two existing copper smelters have not, as yet, initiated any sulfur recovery programs.[22] (White Pine-White Pine, Michigan, and Phelps Dodge-Douglas, Arizona)

Of importance are the facts that two existing copper smelters are starting up or installing double-contact sulfuric acid plants, one existing smelter is currently lining out a dimethylaniline system applied to a reverberatory furnace weak gas stream, and an electric furnace and syphon converter system is under start-up at one other existing smelter.

If all of the above plans were to become reality at the existing copper smelters, twenty process effluents out of a total of 37 would be either wholly or in part subjected to SO_2 emission control.

The construction of four new primary copper extraction facilities is planned for the near future. Phelps Dodge has under construction a new copper smelter at Tyrone, New Mexico. This smelter will incorporate Outokumpu Oy flash smelting technology and will produce 100,000 tons per year of copper.[23] The smelter is scheduled to start up in mid-1974. Off-gases from the flash furnace and copper converters will be controlled by an elemental sulfur plant and a sulfuric acid plant, respectively.

Both Anaconda and Duval Copper have announced the construction of hydrometallurgical copper extraction facilities. The Anaconda installation will be located at Anaconda's Anaconda, Montana, smelter and is scheduled for start-up in late 1974. The facility will have the capacity to produce 36,000 tons per year of copper. The Duval copper installation will be located at Duval's Esperanza mine, just south of Tucson, Arizona. The facility is scheduled for start-up in early 1975 and will have the capacity to produce 32,500 tons per year of copper. These two installations will be the first of their type to operate on a commerical basis.

Hecla-El Paso Natural Gas is also constructing a new copper smelter. This smelter will use the roast-leach-electrowin technology developed by

Bagdad copper in the 1950's. The process involves the roasting of copper sulfide concentrates followed by a sulfuric acid leach and then electrolysis of the leach solution to recover copper. The smelter will be located just south of Casa Grande, Arizona, and will have the capacity to produce 30,000-35,000 tons per year of copper. Off-gases from the roaster will be controlled by a sulfuric acid plant and the smelter is scheduled to start up in early 1975.

5.1.2 Foreign Copper Smelters

Table 5.2 contains data pertaining to process and pollution control equipment utilized by several foreign primary copper smelters which were visited by EPA in August and September of 1972.[2] Three of these operations utilize the flash smelting technique. Off-gases from this technique are processed for SO_2 control by double-contact sulfuric acid plants and a liquid SO_2 plant. One smelter recovered SO_2 from its reverberatory furnace effluent by means of a single-contact sulfuric acid plant at the time of the EPA visit. Hooding, used to prevent the release of fugitive SO_2 emissions, and scrubbing of acid plant tail gas, as well as other weak SO_2 gas streams, are discussed in this table.

Table 5.2. Foreign Copper Smelters.[2]

COMPANY NAME/LOCATION	COPPER PRODUCTION	PRODUCTION & POLLUTION CONTROL EQUIPMENT: ROASTERS NO. OF OPER/STBY	ROASTERS GAS STREAM CONTROL EQUIPMENT	FURNACES NO. OF OPER/STBY	FURNACES GAS STREAM CONTROL EQUIPMENT	CONVERTERS NO. OF OPER/STBY	CONVERTERS GAS STREAM CONTROL EQUIPMENT
Mitsubishi Metal Mining Co., Ltd./ Naoshima, Japan	#1 Smelter 6,000 M.T/Mo. Anode Cu	1/0	One 50 T/hr fluid bed roaster. Off-gases, containing 40-45% of input sulfur (11% SO_2), to two cyclones in series, waste heat boiler, one cyclone, electrostatic precipitator, then join converter gases.	1/0	Side-charged reverberatory furnace. Off-gases treated for particulate by waste heat boiler and electrostatic precipitator, then to atmosphere at 0.1 gr/Nm^3. This effluent at 0.55% SO_2 joins #2 furnace and lead blast furnace off-gases.	3/1	Pierce-Smith type. Off-gases air-cooled, then to electrostatic precipitator, mix with all roaster off-gases. Part goes to Lurgi single contact acid plant & other part blended with lead sinter machine off-gases and sent to Petersen dilute acid plant. Tail gas from both acid plants scrubbed in limestone packed scrubber tower.
	#2 Smelter 7,000 M.T/ Mo. Elect. Cu	1/0	One 50 T/hr fluid bed roaster. Off-gases, containing 40-45% of input sulfur (11% SO_2), to two cyclones in series, waste heat boiler, one cyclone, electrostatic precipitator, then joins converter gases.	1/0	Wagstaff-gun charged reverberatory furnace. Off-gases (1.0% SO_2) treated for particulate by waste heat boiler and electrostatic precipitator, then joins #1 furnace and lead blast furnace off-gases and to atmosphere at loading of 0.1 gr/Nm^3 through 130 m stack. Smelter plans to scrub effluent with limestone at later date.	2/1	Pierce-Smith type. Off-gases to waste heat boiler & electrostatic precipitator, then join roaster gases. All gases to Lurgi double contact sulfuric acid plant. Tail gas measured at 200 ppm average.
Onahoma Smelting & Refining Co./ Onahoma, Japan	12,000 M.T./ Mo. Elect. Cu	-	GREEN FEED - Smelter plans to double capacity in near future by addition of 1 new reverb and 1 new converter each. Additional smelter off-gases will be controlled by MgOx and CaO scrubbing for reverb gases and acid plant for converter gases. Current sulfur emissions to total input = 0.6%.	1/0	Side-charged reverberatory furnace. Off-gases (1.5-2.5% SO_2) to two waste heat boilers and electrostatic precipitators, then to single contact sulfuric acid plant (97.6% conversion efficiency). Tail-gas (450-750 ppm SO_2) to limestone-packed tower. Effluent from tower contains 50-100 ppm SO_2. Acid plant contains refrigeration unit and pre-heater which both enable application to reverb gas stream.	2/2	Pierce-Smith type with oxygen enrichment and tight hooding. Fugitive SO_2 emissions from converters collected by various hooding and treated by limestone scrubber. Converter off-gases (11-12% SO_2) to waste heat boilers, electrostatic precipitators, and double-contact sulfuric acid plant (99.8% conversion efficiency). Tail-gas (200 ppm SO_2) to NaOH scrubbing tower for neutralization. Final effluent contains 20 ppm SO_2.
Nippon Mining Co., Ltd./Naoshima, Japan	14,000 M.T./ Mo. Elect. Cu	One 80 M.T/hr flash furnace. Oxygen enriched furnace off-gases (12% SO_2) passed to waste heat boiler, then electrostatic precipitator, then Lurgi double contact sulfuric acid plant. Tail-gas of 500 ppm to atmosphere.				4/0	Pierce-Smith type. Off-gases to ESP, mixed with Pyrite gases & sent to Lurgi single contact sulfuric acid plant. Tail-gas treated by NaOH.
Mitsui Mining & Smelting/Tamano, Japan	7,000 M.T./ Mo. Blister Cu	One 52 M.T/hr flash furnace. Furnace off-gases (6% SO_2) to waste heat boiler, cyclone, and electrostatic precipitator, then join converter gases. All gases (6-7% SO_2) to Monsanto double contact sulfuric acid plant (99.5% conversion efficiency guaranteed). Acid plant still in start-up, but average tail-gas concentration of 500-1000 ppm SO_2 indicated.				3/0	Pierce-Smith type with air-cooled tight hoods. Off-gases (7-14% SO_2) to waste heat boiler, electrostatic precipitator, then join flash furnace off-gases.
International Nickel Co./ Sudbury, Ont., Canada	375 T/D Anode & Elect. Cu	One 1500 T/day INCO flash furnace. Off-gases, containing 80% SO_2, pass through an air-cooled settling chamber, a water-cooled spash tower, three venturi scrubbers in series, a wet electrostatic precipitator, and is then delivered to an adjacent liquid SO_2 plant.				4/1	Pierce-Smith type. Off-gases blended with Nickel smelting off-gases and all pass through electrostatic precipitator. Total of 7,000,000 acfm at 400°F, containing 0.8% SO_2, then passes to atmosphere by means of 1250 ft stack.
Societe General de Hoboken/ Hoboken, Belgium	150 T/D Blister Cu	This is basically a lead smelter: Lead ores containing large minor quantities of copper, zinc, arsenic, and antimony are calcined in roasters and reduced in a lead blast furnace. The lead bullion contains a copper matte layer, which is charged to Hoboken converters.				2/1	Hoboken converters, in which off-gases are taken from side of converter & zero-draft is maintained at the converter mouth. Off-gases sent to pipe coolers and electrostatic precipitators, then join roaster and sinter machine off-gases. Half of total gas to Petersen dilute acid plant. Other half to single contact Mechim acid plant (98.6-99.2% conversion efficiency reported).

5.2 PRIMARY ZINC SMELTERS

5.2.1 Domestic Zinc Smelters

The physical locations of the eight existing domestic primary zinc smelters as of mid-1973 are portrayed in Figure 5-4. Each of the eight domestic smelters is of the custom type; that is, the zinc concentrates processed are generally purchased from numerous sources. Of the three basic types of zinc production methods described in Section 3.1.2, three smelters employ the horizontal retort process, two smelters use the vertical retort process, and the electrolytic technique is performed at two zinc operations. The eighth smelter produces zinc calcine for the production of zinc oxide. A data compilation table for the existing zinc smelters, as was presented for the primary copper industry, is used as a basis for the remaining discussion in this section. This data is presented in Table 5.3.

Seven of the eight existing zinc plants utilize one or a combination of several types of roasters, which include Ropp roasters, multiple-hearth roasters, or the modern flash and fluid-bed roasters. The Ropp roaster, used by only one domestic smelter, is the only type roaster which does not produce a gas stream that is amenable to conventional SO_2 control. Approximately 2900 tons per day of zinc concentrate are processed in a total of 25 roasters, with an average feed rate of 120 tons per day per roaster.

Four smelters employ a total of 15 downdraft sinter machines to produce a hard porous material which is suitable for reduction in a horizontal or vertical retort. One operation employs a rotary kiln to remove impurities from its zinc calcine. Another smelter uses one large downdraft sintering machine to simultaneously roast and

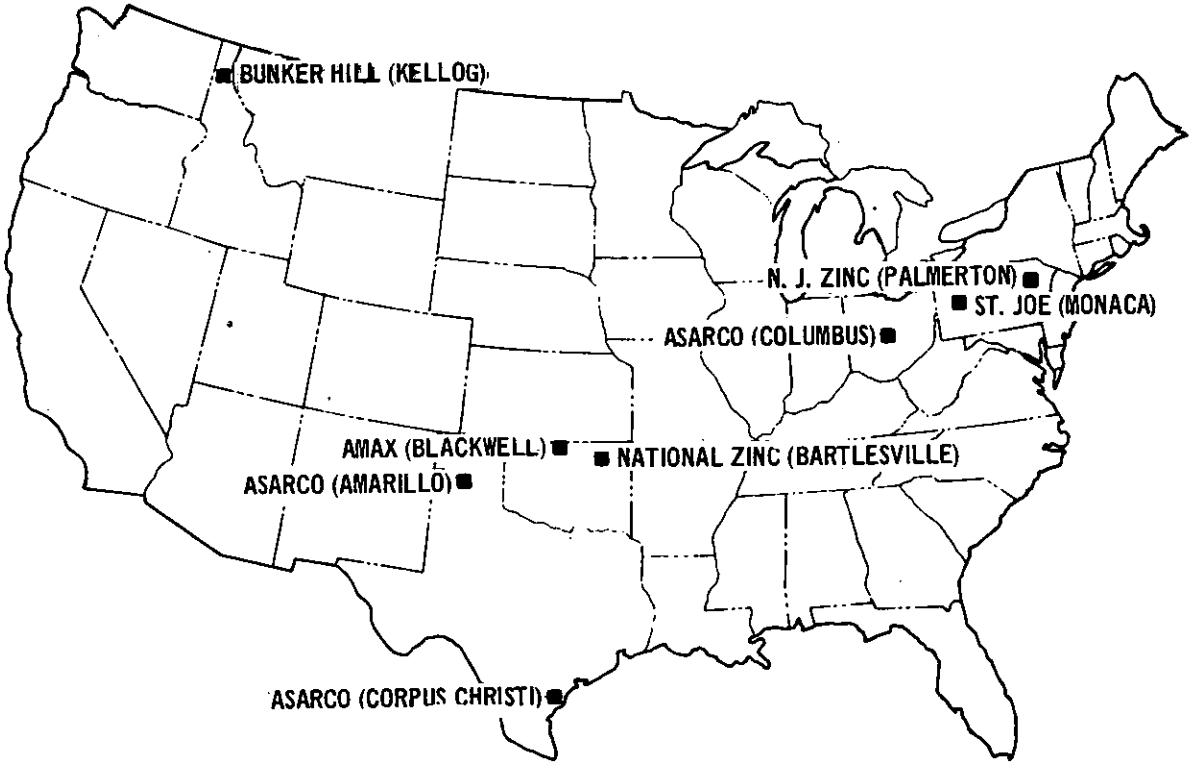

Figure 5-4 Existing domestic primary zinc smelters.

TABLE 5.3 EXISTING U.S. ZINC SMELTERS[2]

COMPANY	AGE OF PLANT		MATERIALS		PRODUCTION EQUIPMENT					STACK DATA					
					ROASTERS		SINTERING MACHINES							EMISSION RATE	
NAME/LOCATION	FIRST YEAR	LAST MODIFICATION	CONC. (T/D)	ZINC (T/D)	NO. OF OPER/STBY	GAS STREAM CONTROL EQUIPMENT	NO. OF OPER/STBY	GAS STREAM CONTROL EQUIPMENT	REDUCTION EQUIPMENT	NO. OF	HEIGHT (ft)	FLOW RATE (SCFM)	SO_2 CONC. (ppm)	PARTIC. (T/D)	SO_2 (T/D)[4]
1) ASARCO/ Corpus Christi, Texas	1942	1972 (Changed flash to fluid bed roasting)	250	300	1/0	250 T/D fluid bed roaster. All roaster gases to 225 T/D acid plant. Tail gas to stack.	None	-	Electrolytic	1 (tail gas)	300	20,000	2000	~0	4.9
2) ASARCO/ Columbus, Ohio	1967	-	200	60 (ZnO)	1/0	200 T/D fluid bed roaster. All roaster gases to 175 T/D acid plant. Tail gas to 200 ft stack.	-	On rotary kiln used to remove impurities from roaster calcine.	None (ZnO plant)	1 (tail gas)	200	11,550[25]	2051[25]	~0	2.9
3) ASARCO/ Amarillo, Texas	1923	-	270	135	6/1	Six 45 T/D Ropp roasters. Roaster gases pass to 400 ft stack untreated. Roaster flow is 110,000 SCFM.	3/0	Down-draft used in series. Sinter flow, 126,000 SCFM, passes thru baghouse (90%+), join roaster gases, then to 400 ft stack.	6400 horizontal retorts. No control of emissions.	1 (roaster, sinter)	400	336,000	4000[4]	4.4[26]	162
4) National Zinc/ Bartlesville, Okla.	1907	1969 (Acid Plant)	250	140	2/0	Two 130 T/D fluid bed roasters. All roaster gases to 275 T/D acid plant. Tail gas to 60 ft stack.	1/0	Down-draft. All sinter gases to ESP (94%) and 151 ft stack.	5824 horizontal retorts. No control of emissions.	1 (tail gas) 1 (sinter)	60 151	17,500[27] 28,000[28]	1600[27] 5000[28]	~0 0.46[4,28]	3.4 17
5) Bunker Hill/ Kellogg, Idaho	1928	1968 (Second Acid Plant)	550	300	4/1	Five flash roasters, four 120 T/D and one 350 T/D units. All roaster gases to two acid plants (300 T/D and 350 T/D), on "as needed" basis, otherwise to 250 ft stack.	None	-	Electrolytic	2 (tail gas) 1 (used only when acid plants not in operation)	75 250	147,000 0	2000-3000 0	~0 0	14.4 0
												(when acid plants continuously used)			
6) St. Joe/ Monaca, Pa.	1938	1972 (2 older acid plants being replaced by one new acid plant)	875	640	9/0	Nine roasters: 5 multi-hearth, 3 fluid bed, and 1 flash. All roaster gases to six acid plants. Tail gases join sinter gases, then to 400 ft stack.	10/0	Down-draft. All sinter gases to settling flue and one baghouse and three ESP's in parallel then join acid plant tail gas, then to 400 ft stack. (Overall effic. is 94-96%)	17 electrothermic furnaces. No control of emissions.	1 (tail gas, sinter)	400	489,000[4,29]	860[4,29]	1.79[4,29]	53
7) New Jersey Zinc, Palmerton, Pa.	1899	1970 (Acid plant mist scrubbers installed)	520	315	2/0	Two 275 T/D flash roasters. All roaster gases to two acid plants (500 T/D total cap.). 40,000 SCFM tail gas joins sinter gases, then out 300 ft stack.	1/0	Down-draft. All sinter gases (100,000 SCFM) to ESP, join tail gas, then to 300 ft stack. (97% total control)	43 vertical retorts. Retort combustion gases are recirculated to supplement fuel requirement.	1 (tail gas, sinter)	300	126,000-140,000	1200[4,30]	0.12	20
8) AMAX/ Blackwell, Okla.	1916	-	490	275	One down-draft sintering machine performs simultaneous roasting and sintering of concentrates. Total gas flow passes thru baghouse (99%).				10,400 horizontal retorts. No control of emissions.	1 (roaster-sinter)	400	132,000[4]	20,000	0.25	324

sinter approximately 500 tons per day of zinc concentrate. The remaining two zinc plants employ the electrolytic technique, wherein the zinc concentrate is roasted and the resulting calcine is subjected to leaching and electrolysis rather than sintering.

Reduction of the zinc sinter is performed at three smelters by a total of about 22,000 horizontal retorts. One smelter utilizes 43 vertical retorts, while one other smelter uses 17 electrothermic furnaces, which are modifications of vertical retort-type furnaces. Of approximately 2100 tons per day of zinc produced by the primary domestic industry, 29 percent is produced by the electrolytic technique, 26 percent by the horizontal retort method, and 45 percent by the application of vertical retorts and electrothermic furnaces.[4]

Figure 5-5 presents the above process equipment statistics for the eight existing zinc smelters.

Particulate matter is emitted from roasters that do not have sulfuric acid plants and from all sintering and reduction equipment. Effluents from the roasters of six smelters pass through electrostatic precipitators and then to single-contact sulfuric acid plants for SO_2 recovery. One smelter which employs Ropp roasters releases its roaster effluent to the atmosphere without any particulate control. Particulate matter contained in sinter machine off-gases is controlled by a combination of both electrostatic precipitators and baghouses. The particulate control efficiency of these devices generally ranges from 90 to 99 percent. Currently, there are no known particulate control

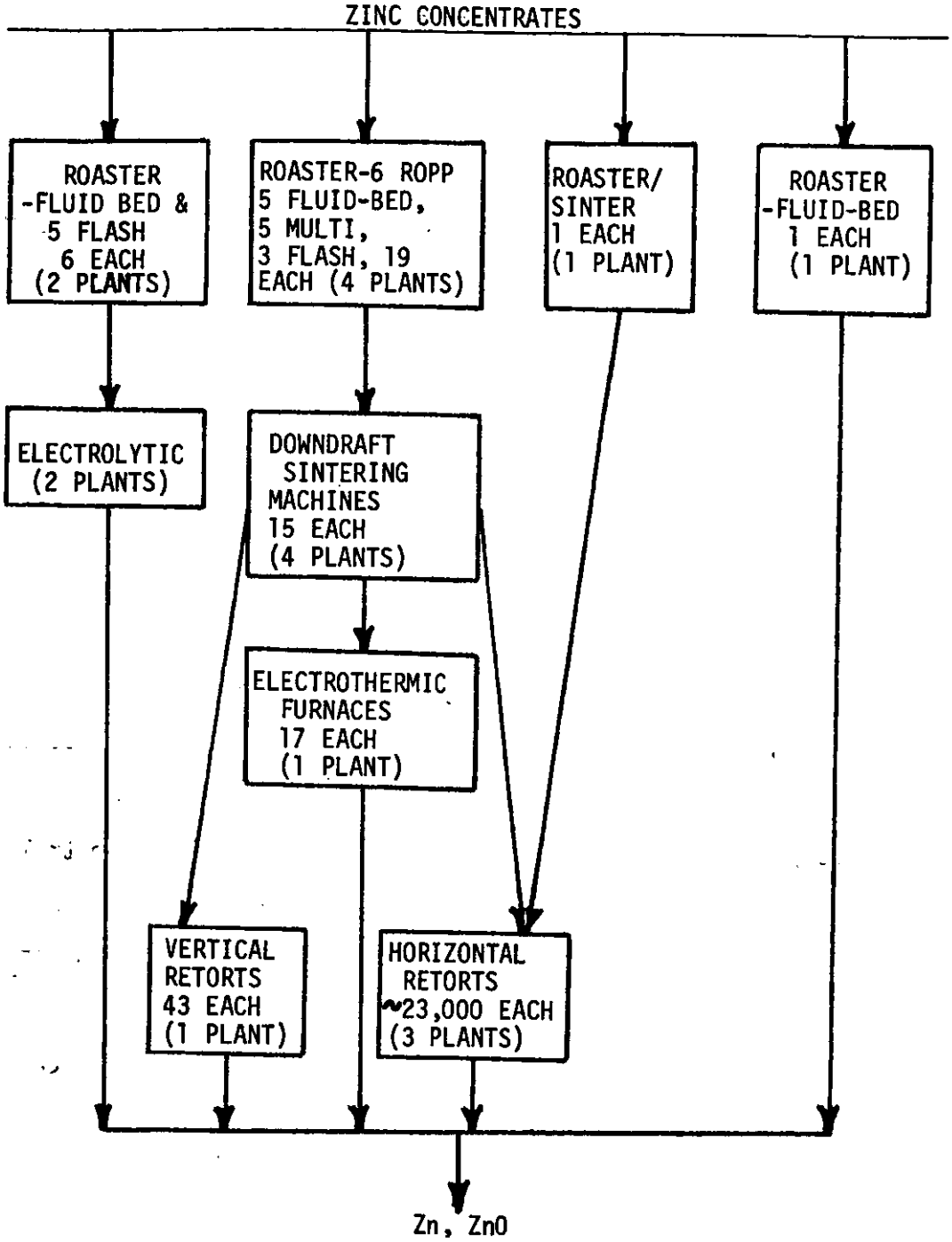

Figure 5-5 Process equipment used by existing domestic primary zinc smelters

methods available for horizontal retort operations. Magnitudes of particulate emissions from horizontal retorts are unknown. With good housekeeping and operating practices, particulate emissions from vertical retorts and electrothermic furnaces can be minimal. Production of zinc metal from zinc calcine by the electrolytic process is essentially "air-pollution free," since this is a "wet" operation.

The production of zinc calcine by roasting zinc concentrates is the major SO_2 producing step. Thirteen single-contact sulfuric acid plants are used to recover the SO_2 generated by nineteen roasters. These acid plants currently provide the only SO_2 control in the primary zinc industry. If an assumption is made that all zinc concentrates contain an average of 30 percent sulfur and that 95 percent of this sulfur is converted to sulfur dioxide, a total uncontrolled mass emission rate of 1900 tons per day of SO_2 could occur. An estimated mass emission rate of approximately 600 tons per day of SO_2 has been reported by the existing industry. Thus, an estimate of the current overall SO_2 control for the primary zinc industry is 68 percent. Of the six smelters which employ single-contact sulfuric acid plants, the percentage control of SO_2 is estimated to be 91 percent. With the SO_2 control currently being practiced by this industry, approximately 0.18 tons and 0.28 tons of SO_2 are emitted for each ton of zinc concentrate processed and each ton of zinc produced, respectively.

Sinter machine off-gases generally contain from 400 to 3000 parts per million SO_2, by volume. Since most of the sulfur has been removed during roasting and sintering, the reduction off-gases normally contain only about 50 parts per million SO_2 by volume. Fugitive SO_2 emissions occur

from roasters and from improperly maintained roaster flues. The magnitude of these fugitive emissions is unknown.[18]

Illustrated in Figure 5-6 is the current status of SO_2 control at the existing primary zinc smelters as of mid-1973.

Several control regulations limiting the atmospheric release of sulfur dioxide from existing primary zinc smelters have been or are being adopted by state and local air pollution control agencies.[20] As of mid-1973, mass emission standards require a minimum of 80 percent control of sulfur fed to the smelter. A stack concentration of 500 ppm SO_2 is required by one state regulation. This concentration must be applied to separate operation effluents, such as the roaster effluent and the sinter machine off-gases. Ambient air quality standards are also used as a measurement of compliance. One state implementation plan, covering a combined lead/zinc operation, was deficient in that it did not provide for the attainment of the national ambient air quality standards. The Environmental Protection Agency is currently developing a regulation to correct this deficiency.[21]

Some revisions, as indicated by Federal and state air pollution agencies, to existing zinc smelters are in the planning stages as of mid-1973:

Status	Action
1) Current	Usage of all existing sulfuric acid producing capacity. Previously, only acid which could be marketed was produced.[20] (Bunker Hill-Kellogg, Idaho)

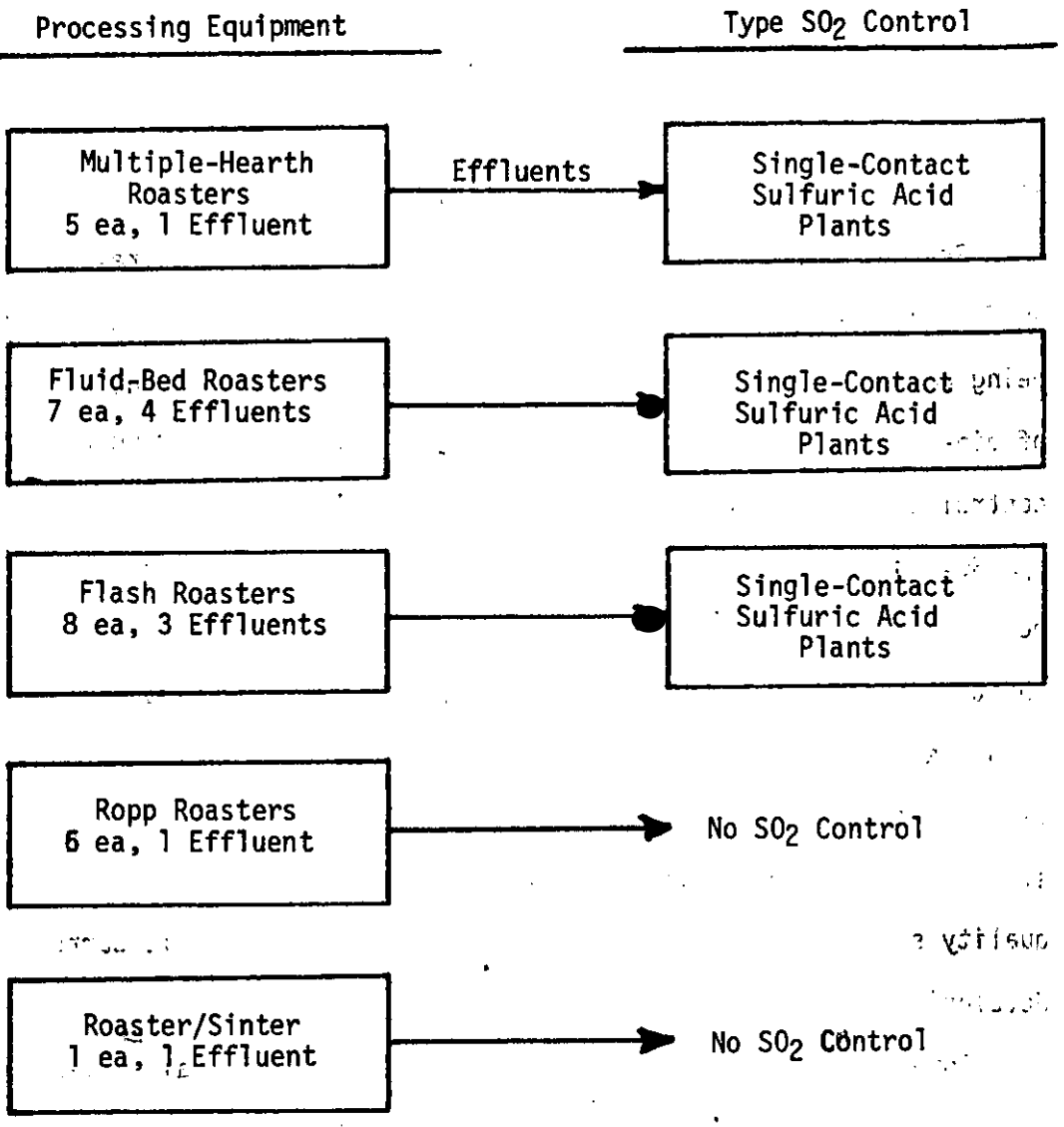

Figure 5-6. Current status of SO_2 control at existing primary zinc smelters.

Status	Action
2) Planning	Two existing zinc smelters investigating double-contact sulfuric acid plants and weak SO_2 gas scrubbing techniques to reduce existing roaster-acid plant tail gas and sinter machine off-gas to 500 ppm, by volume.[20,31] (St. Joe-Monaca, Pennsylvania, and N.J. Zinc-Palmerton, Pennsylvania)
3) Planning	Two existing zinc smelters to shut down operation by December 1973.[32,33] (ASARCO-Amarillo, Texas, and AMAX-Blackwell, Oklahoma)
4) Planning	Increase stack height. (National Zinc-Bartlesville, Oklahoma)
5) No plans	Two existing zinc smelters either already meet local and state SO_2 regulations or have not yet initiated any sulfur recovery programs. (ASARCO-Columbus, Ohio, and ASARCO - Corpus Christi, Texas)

The primary domestic zinc smelting industry has announced the construction, expansion, and remodeling of new and existing zinc facilities within the United States. Since the ASARCO Amarillo and AMAX Blackwell horizontal retort smelters will be closing shortly, both companies have indicated that replacement capacity is forthcoming.[32,33] AMAX has exercised its option to purchase the East St. Louis, Illinois, electrolytic zinc plant owned by the American Zinc Company.[32] Expenditures for the refurbishing of this plant have been stated to be $16.4 million. Shipment of zinc should commence during 1973, with full capacity of 84,000 tons per year of electrolytic zinc reached by 1975. ASARCO may expand its Corpus Christi electrolytic zinc operation by as much as 20 percent.[33]

ASARCO is also considering the construction of a new 150-ton-per-day electrolytic zinc facility near Stephensport, Ky.[34] If this project is undertaken, plant start-up would occur in 1976.

5.2.2 Foreign Zinc Smelters

The electrolytic zinc plant Ruhr-Zink GMBH, Datteln, West Germany, was visited by EPA in August/September of 1972.[2] This operation produces 80,000 metric tons per year of electrolytic (high-grade) zinc. A Lurgi 180-ton-per-day fluid-bed roaster is the only SO_2 emitting source at this facility. Off-gases from this roaster contain 10 to 12 percent SO_2. This effluent is cooled by a waste heat boiler and its particulate loading is reduced by subjecting it to cyclones and three electrostatic precipitators in parallel. A 645-metric-ton-per-day double-contact sulfuric acid plant is employed for SO_2 recovery. The SO_2 conversion efficiency of this acid plant was reported to be 99.5 percent. The Berzelius and Penarroya smelters were also visited.[2] Since these two primary foreign smelters are combined lead/zinc operations, a discussion of their process and control technology will be presented in Section 5.3.

5.3 PRIMARY LEAD SMELTERS

5.3.1 Domestic Lead Smelters

As shown by Figure 5-7, the six existing domestic primary lead smelters are basically located within the Missouri lead belt and the Coeur D'Alene lead area. A few of these smelters process their own lead concentrates, but the majority of the processed concentrates are purchased from both domestic and foreign sources.

A compilation of data, including plant age and most recent major modification, materials processed and produced, process and emission control equipment, stack parameters, and emission data, is presented in Table 5-4 for each of the six existing primary lead smelters. The remainder of the discussion contained in Section 5.4 is either taken directly or calculated from this table.

As described previously, two pyrometallurgical process steps are employed by each of the six existing lead smelters for the production of lead bullion, sintering and furnacing. Figure 5-8 illustrates the current process equipment used by the existing industry. Five smelters employ the updraft type sintering machine, while the remaining one smelter uses the downdraft type. Because of their much greater capacity, only one updraft sintering machine is used at each of the five smelters, whereas six of the smaller downdraft type machines are used at the sixth facility. A total of eight blast furnaces are used to reduce the lead sinter to lead bullion.

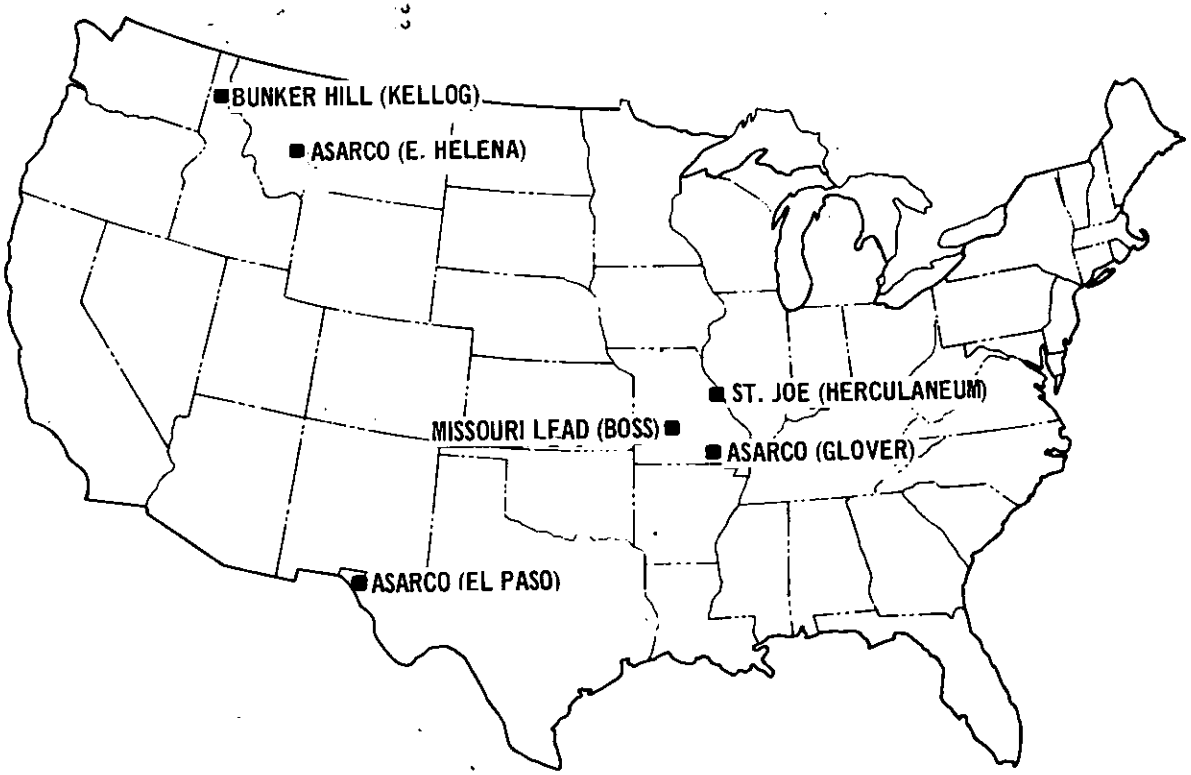

Figure 5-7 Existing domestic primary lead smelters.

TABLE 5.4. EXISTING U.S. LEAD SMELTERS[2]

COMPANY	AGE OF PLANT		MATERIALS		PRODUCTION EQUIPMENT				STACK DATA					
					SINTERING MACHINES		BLAST FURNACES						EMISSION RATE	
NAME/LOCATION	FIRST YEAR	LAST MODIFICATION	CONC. (T/D)	LEAD (T/D)	NO. OF OPER/ STBY	GAS STREAM CONTROL EQUIPMENT	NO. OF OPER/ STBY	GAS STREAM CONTROL EQUIPMENT	NO. OF	HEIGHT (ft)	FLOW RATE (SCFM)	SO_2 CONC. (ppm)	PARTIC. (T/D)	SO_2 (T/D)[4]
1) Bunker Hill/ Kellogg, Idaho	1917	1971 (Acid Plant)	515	350	1/0	Updraft sintering machine produces two gas streams: strong gas stream, 30,000 to 50,000 SCFM, to 300 T/D acid plant. Weak gas stream, 30,000 to 50,000 SCFM, joined with blast furnace and hygiene air.	1/1	Blast furnace gas stream joined to weak sinter gas stream and 300,000 SCFM hygiene air, then to baghouse (95%)[3] then to stack.	1 (tail-gas) 1 (sinter-weak, blast furnace, other)	75 200	30,000 316,500	2000[35] 580[4]	~0 0.85[36]	7.5 22.4[36]
2) Missouri Lead Operating Co./ Boss, Mo.	1968		810 (20 D/ Mo)	380	1/0	Updraft sintering machine produces two gas streams: strong gas stream (26,000 SCFM) to 200 T/D acid plant. Weak gas stream (66,000 SCFM) joined with blast furnace gases.	1/1	Blast furnace gases (125,000 SCFM)[37] join sinter weak gases, then to baghouse and out 200 ft. stack.	1 (tail-gas) 1 (sinter-weak, blast furnace, other)	30 200	22,250[38] 240,000[37]	2950[38] 1800-2500[37]	~0 0.25	8 63
3) St. Joe/ Herculaneum, Mo.	1892	1972 (New baghouse for fugitive emissions)	745	550	1/0	Updraft sintering machine produces two gas streams: strong gas stream (29,000 SCFM)[29] to 300 T/D acid plant. Weak gas stream joins other gases, then thru baghouses and 352 ft. stack.	2/1	Blast furnace gases join sinter weak gases and other gases, pass thru baghouses and 352 ft. stack.	1 (tail-gas, sinter, blast furnace, other)	352	356,000[29]	4600[29]	0.48[29]	200
4) ASARCO/ E. Helena, Montana	1888		400	105	1/0	Updraft sintering machine. Gases to water spray, ESP, then dilution air added.	1/1	Blast furnace gases join reverb and ventilation gases (total 180,000 SCFM), then pass thru three baghouses in parallel with 125 ft. stack for each house.	1 (sinter) 3 (blast furnace, other)	420 125	150,000[4,39] 195,000[4,39]	21,800[39] 27,700 325[4,39]	1.1[4,39] 0.46[40]	440[39] 7.8
5) ASARCO/ Glover, Mo.	1968		260	222 (Capacity)	1/0	Updraft sintering machine. All gases to water spray and baghouse, then out 610 ft. stack.	1/0	Blast furnace gases to water spray, baghouse, and three 58 ft. stacks.	1 (sinter) 3 (blast furnace)	610 58	230,000[4] 125,700[41]	12,400 14,200[4,40] 1400	0.07[40] 0.106[41]	365[40] 22[40]
6) ASARCO/ El Paso, Texas	1887		220	150	6/0	Downdraft sintering machines. Gases treated by scrubbers, a spray chamber, and a baghouse (99.8%), then out 610 ft. stack.	2/1	Blast furnace and dross furnace gases mix, then pass thru a spray chamber and a baghouse (99.9%), then out six 108 ft. stacks.	1 (sinter) 6 (blast & dross furnaces)	610 108[39]	300,000 160,000[4,39]	5200[4] 1400[4]	0.1[4,39] 0.1[4,39]	190[39] 27[39]

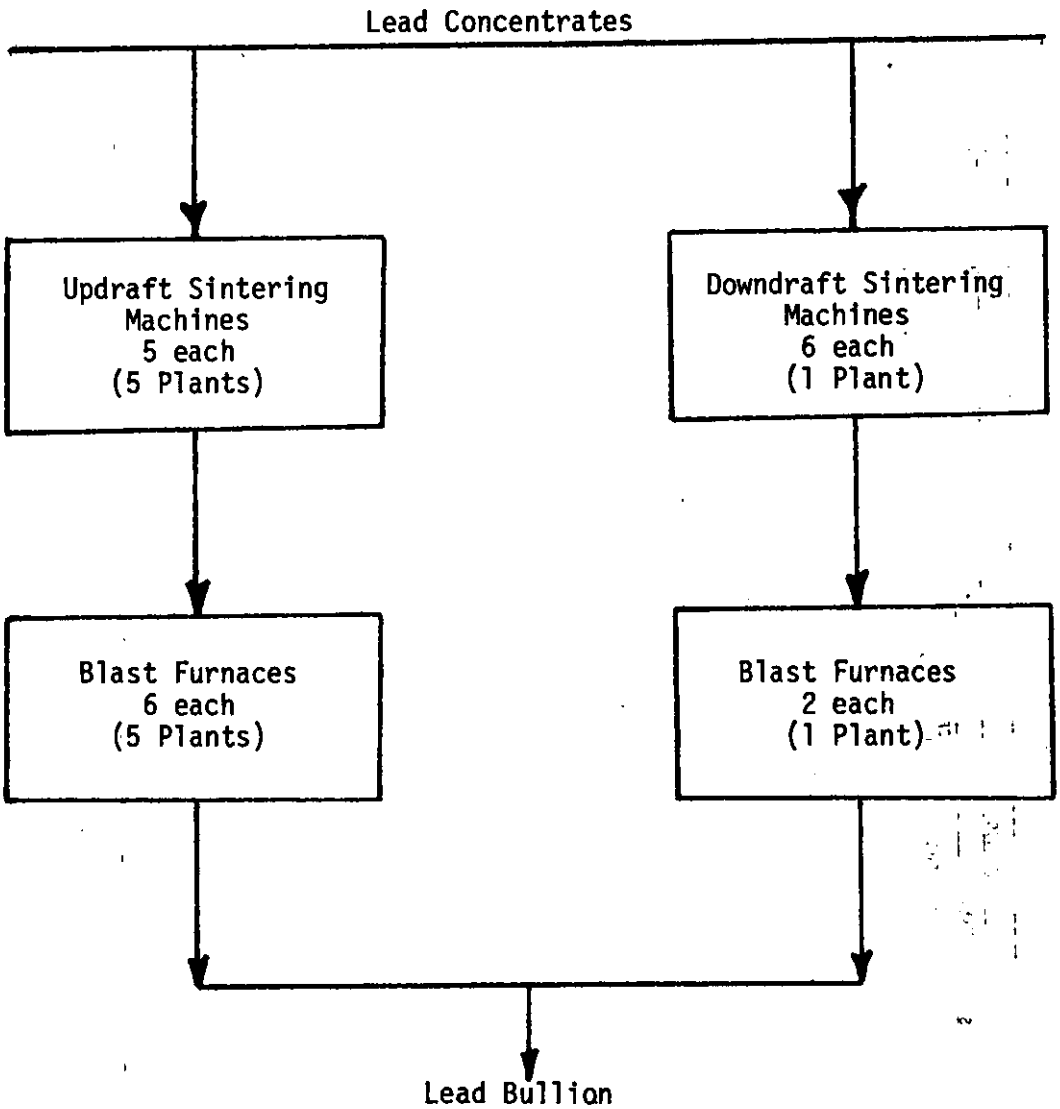

Figure 5-8. Process equipment used by existing domestic primary lead smelters.

Particulate matter is emitted from all operating sinter machines and blast furnaces. This particulate matter is controlled by highly efficient baghouses on all but one effluent, which is controlled by an electrostatic precipitator.

Three of the six smelters currently recover sulfur dioxide from part of their sinter machine off-gases. These three operations divide the sinter machine effluent into a strong SO_2 component, from the front portion of the machine, and a weak SO_2 component, from the rear section of the machine. The strong SO_2 gas stream is then subjected to sulfur recovery by means of a single-contact sulfuric acid plant at each of the three smelters. The weak gas streams are subjected to particulate control and are then released to the atmosphere without sulfur recovery. The other three smelters extract one effluent from each operating sinter machine and pass this effluent to the atmosphere with particulate control only. The gases from all eight operating blast furnaces are released to the atmosphere without sulfur recovery.

The mass emission rate values for SO_2 listed in Table 5.3 are basically those values which would be emitted when the sintering machines and blast furnaces are both operating at the existing facility. A lead sintering machine is generally operated 20 days per month (or 240 days per year), whereas blast furnaces are nearly continuously in operation.[18] Assuming that approximately 200,000 tons per year of sulfur enter the six existing lead smelters and that nearly 150,000 tons of sulfuric acid were produced during 1971, the total recovery

of SO_2 for this industry is currently about 27 percent. This value is equivalent to an emission ratio of 0.2 tons of SO_2 per ton of lead bullion produced. The magnitude of fugitive SO_2 emissions is considered to be nearly insignificant at most of the six existing facilities. These emissions evolve from hot sinter transfer points and from tapping and charging areas.[18]

Figure 5-9 presents the current status of SO_2 control for the existing primary lead industry as of mid-1973.

Current or pending state and local regulations as of mid-1973[20] for SO_2 control include a required mass emission rate which must not exceed a maximum of 10 percent of the input sulfur to the smelter, a stack concentration of 2000 ppm SO_2, by volume, and a set of ambient air quality standards. The Environmental Protection Agency is currently developing regulations to correct the deficiencies contained in two state implementation plans for lead smelters.[21]

Changes in process and control technology which are currently taking place in the primary lead industry include, as of mid-1973:

Status	Action
Current	Usage of all existing sulfuric acid producing capacity. Previously, only acid which could be marketed was produced.[20] (Bunker Hill-Kellogg, Idaho)
Current	Three smelters awaiting EPA policy decision as Intermittent Curtailment Systems. (Missouri Lead-Boss, Missouri; St. Joe-Herculaneum, Missouri; and ASARCO-El Paso, Texas)
No action	Two smelters have not made commitments, to date. (ASARCO-Glover, Missouri, and ASARCO-East Helena, Montana)

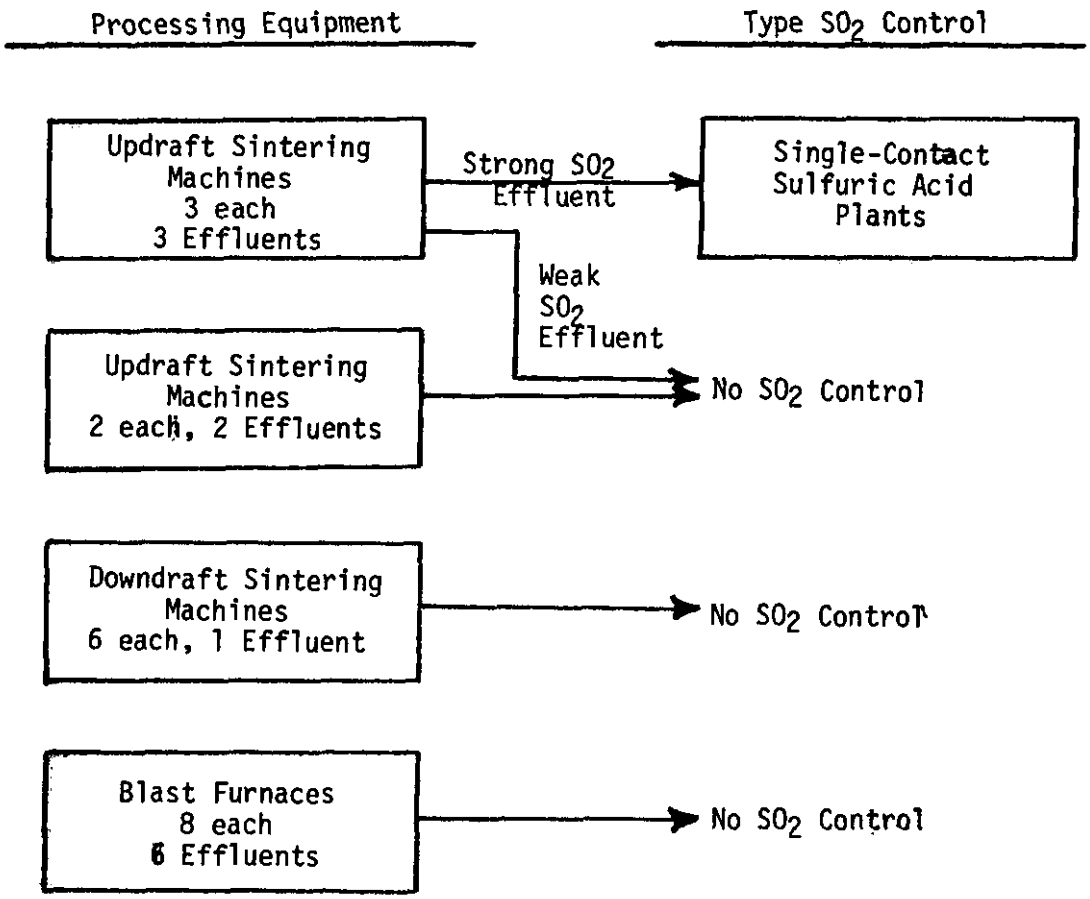

Figure 5-9. Current status of SO_2 control at existing primary lead smelters.

Currently, there are no known new primary lead smelters under construction in the United States.

5.3.2 Foreign Primary Lead Smelters

Several foreign lead smelters were visited by EPA in August and September of 1972. One of these, Hoboken Metallurgie, Hoboken, Belgium, employs multihearth roasters to remove volatile impurities, as well as excess sulfur from the lead concentrates. Off-gases from the multihearth operation, containing 6 percent SO_2, are passed through an electrostatic precipitator, a venturi scrubber, and are then combined with other plant effluents and treated in either a Petersen or a Mechim single-contact sulfuric acid plant. The lead calcine, containing a maximum of 42 percent lead, is fed to a downdraft sinter machine, which employs gas recirculation. The sinter machine off-gases, containing 4.5 to 6 percent SO_2, pass through a venturi scrubber and then join the roaster gases. Two blast furnaces, the off-gases from which are controlled for particulate only, reduce the sinter to lead bullion and copper matte.

Both the Berzelius GMBH smelter in Duisburg, West Germany, and the Penorroya Noyelle Godault, France, smelter employ the Imperial Smelting Furnace technique. Lead and zinc concentrates are mixed and sintered in an updraft sinter machine. Sinter machine gas-recirculation is practiced at both smelters with off-gases generally containing 5 to 6 percent SO_2. Berzelius employs one double-contact and one modified double-contact sulfuric acid plant. Penorroya also produces lead from a conventional sinter machine-blast furnace operation. For this operation, two effluents are taken from one updraft sinter machine. The strong SO_2 effluent, taken from the front half of the

machine, contains 75 percent of the SO_2 generated during sintering. The gas stream is sent to a single-contact sulfuric acid plant. The remaining 25 percent of the generated SO_2 is passed to the atmosphere without SO_2 recovery.

The Boliden Lead Smelter, located in Skelleftehamm, Sweden, utilizes an electric furnace and a Pierce-Smith type converter to produce lead bullion. Approximately 235 tons per day of lead concentrate, containing 75 percent lead, are fed to this electric furnace. Furnace off-gases, containing 90 percent of the input sulfur to the smelter, are passed through a waste heat boiler, an electrostatic precipitator, and a single-contact sulfuric plant.

References for Section 5

1. Sum of Consumptive Values Taken from Mineral Industry Surveys, "Lead Industry in January 1972," "Zinc Industry in January 1972," "Copper Industry in January 1971."

2. Unreferenced data contained in Tables 5.1 through 5.4 have been extracted from EPA Trip Reports written by G.S. Thompson, Jr., T. Jacobs, C.H. Darvin, F.L. Porter, T. Osag, and S.L. Roy. Copies of all such reports are available at ESED, SDB, Research Triangle Park, N.C. 27711.

3. Goodwin, D.R. Personal communication with Mr. K. Nelson, ASARCO, Salt Lake City, Utah, May 3, 1972. ESED, U.S. Environmental Protection Agency, Research Triangle Park, N.C.

4. Calculated from other data.

5. Goodwin, D.R. Personal communication with Mr. W.E. Fenzi, Phelps-Dodge Corp., New York, N.Y., April 17, 1972. ESED, U.S. Environmental Protection Agency, Research Triangle Park, N.C.

6. Goodwin, D.R. Personal communication with Mr. J.S. Wise, Magma Copper Co., San Manuel, Az., May 5, 1972. ESED, U.S. Environmental Protection Agency, Research Triangle Park, N.C.

7. Harrison, R.T. Memo to Files, Determination of Allowable Sulfur Oxides Emissions from the Magma Copper Smelter in San Manuel, Arizona, August 9, 1972. SSPCP, SDID, PMB, U.S. Environmental Protection Agency, Research Triangle Park, N.C.

8. Goodwin, D.R. Personal communication with Mr. R.N. Pratt, Kennecott Copper Corp., New York, N.Y., October 10, 1972. ESED, U.S. Environmental Protection Agency, Research Triangle Park, N.C.

9. Goodwin, D.R. Personal communication with Mr. F.R. Milliken, Kennecott Copper Corp., New York, N.Y., April 14, 1972. ESED, U.S. Environmental Protection Agency, Research Triangle Park, N.C.

10. Berry, D.K., Memo to Files, May 3, 1972, SSPCP, SDID, PMB, U.S. Environmental Protection Agency, Research Triangle Park, N.C.

11. Berry, D.K. Memo to Files. May 4, 1972. SSPCP, SDID, PMB, U.S. Environmental Protection Agency, Research Triangle Park, N.C.

12. Berry, D.K. Personal communication with Mr. I.G. Pickering, Kennecott Copper Corp., Hayden, Az., May 17, 1972. SSPCP, SDID, PMB, U.S. Environmental Protection Agency, Research Triangle Park, N.C.

13. Green, J.A. Personal communication with Mr. D.D. Kerr, Kennecott Copper Corp., Garfield, Ut. January 27, 1972. Region VIII, U.S. Environmental Protection Agency, Denver, Colorado.

14. Goodwin, D.R. Personal communication with Mr. G.W. Wunder, Anaconda Co., New York, N.Y. October 10, 1972. ESED, U.S. Environmental Protection Agency, Research Triangle Park, N.C.

15. Goodwin, D.R. Personal communication with Mr. R.C. Weed, Anaconda Co., Tucson, Az. May 3, 1972. ESED, U.S. Environmental Protection Agency, Research Triangle Park, N.C.

16. Goodwin, D.R. Personal communication with Mr. R.C. Cole, Inspiration Consolidated Copper Co., Inspiration, Az. April 12, 1972. ESED/SDB, U.S. Environmental Protection Agency, Research Triangle Park, N.C.

17. Harrison, R.T. Memo to Files, Determination of Allowable Sulfur Oxides Emissions from the Inspiration Copper Smelter in Inspiration, Arizona. August 9, 1972. SSPCP, SDID, PMB, U.S. Environmental Protection Agency, Research Triangle Park, N.C.

18. Thompson, G.S., Jr. Personal communication with Mr. J. Schueneman, CPDD, U.S. Environmental Protection Agency, Research Triangle Park, N.C. Unpublished.

19. Values determined by analysis of data contained in References 2 through 18 of the section.

20. Thompson, G.S., Jr. "Existing Emission Control Regulations." December 1972. ESED/SDB, U.S. Environmental Protection Agency, Research Triangle Park, N.C. Unpublished.

21. Federal Register, Vol. 37, No. 145, Part III. Environmental Protection Agency. State Plans for Implementation of National Ambient Air Quality Standards, Notice of Proposed Rule Making. July 27, 1972. Washington, D.C.

22. Howekamp, D.P. Memo to Smelter Study Files, Planned Process Changes, Control Equipment Additions and Stack Construction at Arizona Smelters During 1973. November 1, 1972. Region IX, U.S. Environmental Protection Agency, San Francisco, Cal.

23. Engineering and Mining Journal. "New Mexico." Vol. 173, No. 7, July 1972. p. 134.

24. Engineering and Mining Journal. "In Clean Air Copper Production, Arbiter Process in First Off the Mark." Vol. 174, No. 2., Feb. 1973. pp. 74-75.

25. Battelle Columbus Laboratories. "Emission Testing Report," EMB Test Number 72-MM-15, ASARCO, Columbus, Ohio. EPA Contract No. 68-02-0230. OAQPS, U.S. Environmental Protection Agency, Research Triangle Park, N.C.

26. Thompson, G.S., Jr. Personal communication with Mr. D. Wolbach, Texas State Board of Health. October 11, 1972. ESED/SDB, U.S. Environmental Protection Agency, Research Triangle Park, N.C.

27. Statnick, R.M. Personal communication to Mr. R. Ajax, ESED/ETB, U.S. Environmental Protection Agency, Research Triangle Park, N.C. October 3, 1972. NERC, CSD, RLB, U.S. Environmental Protection Agency, Research Triangle Park, N.C.

28. Goodwin, D.R. Personal communication with Mr. J.S. Van Aken, National Zinc Co., Bartlesville, Okla. October 4, 1972. ESED/ U.S. Environmental Protection Agency, Research Triangle Park, N.C.

29. Goodwin, D.R. Personal communication with Mr. J.G. Sevick, St. Joe Minerals Corp., New York, N.Y. October 5, 1972. ESED, U.S. Environmental Protection Agency, Research Triangle Park, N.C.

30. Goodwin, D.R. Personal communication with Mr. G.A. Wilson, N.J. Zinc Co., Bethlehem, Pa. September 29, 1972. ESED, U.S. Environmental Protection Agency, Research Triangle Park, N.C.

31. Petitions For Variance filed by St. Joe Minerals Corp., Monaca, Pa. and N.J. Zinc Co., Palmerton, Pa. to the Commonwealth of Pennsylvania, Dept. of Environmental Resources. September 1972. Region V, U.S. Environmental Protection Agency, Philadelphia, Pa.

32. Mining Journal. The Mining Week. "U.S., Turning Point for Zinc Smelting?" July 7, 1972.

33. Mining Journal. Week. "Amarillo Zinc Smelter Faces Closure." July 25, 1972.

34. Wall Street Journal. "ASARCO Acquiring Site For Possible Zinc Plant." April 4, 1973.

35. Assumed by author.

36. Goodwin, D.R. Personal communication with Mr. G.M. Baker, Bunker Hill Co., Kellogg, Idaho. October 12, 1972. ESED, U.S. Environmental Protection Agency, Research Triangle Park, N.C.

37. Goodwin, D.R. Personal communication with Mr. D.J. Donahue, American Metal Climax, Inc., New York, N.Y. October 4, 1972. ESED, U.S. Environmental Protection Agency, Research Triangle Park, N.C.

38. Midwest Research Institute. Emission Testing Report - EPA Task No. 10, Emissions From a Primary Lead Smelter Sintering Machine Acid Plant at Missouri Lead Operating Co., Boss, Mo. EPA Contract No. 68-02-0228. ESED/ETB, U.S. Environmental Protection Agency, Research Triangle Park, N.C.

39. Goodwin, D.R. Personal communication with Mr. R.J. Muth, ASARCO, New York, N.Y. October 12, 1972. ESED, U.S. Environmental Protection Agency, Research Triangle Park, N.C.

40. Goodwin, D.R. Personal communication with Mr. R.J. Muth, ASARCO, New York, N.Y. October 16, 1972. ESED, U.S. Environmental Protection Agency, Research Triangle Park, N.C.

41. Midwest Research Institute. Source Testing - EPA Task No. 10, ASARCO, Glover, Mo. EPA Contract No. 68-02-0228.

6. ECONOMIC ANALYSIS

6.1 COPPER EXTRACTION

6.1.1 Copper Industry Economic Profile

The primary copper extraction industry is composed of companies primarily engaged in the mining, beneficiation, smelting, and refining of copper metal and fabrication of copper metal products. In addition, the industry produces other marketable metals and minerals from by-product materials processed in the winning of copper from ores. These include lead, zinc, silver, molybdenum, tellurium, gold, selenium, arsenic, cadmium, and titanium.

Table 6-1 is an analysis of each company's contribution in mining, smelting, refining, and marketing of refined copper metal.

The leading marketers of domestic refined copper, according to Table 6-1, are Kennecott, American Smelting and Refining (ASARCO), and Phelps Dodge, in order of sales. These three firms account for 61 percent of the primary copper industry output. With the addition of American Metal Climax and Anaconda, five firms market approximately 85 percent of the nation's refinery production.

A tabulation of individual smelters and refinery plants is presented in Table 6-2. Generally, the integrated companies have a refinery located close to a smelter. The exceptions to this rule are the ASARCO smelters in the Southwest, Phelps Dodge's Douglas smelter, and Kennecott's McGill and Hayden smelters.

Of the five earlier mentioned large firms, Kennecott is completely integrated from the mine through the refinery; that is, it controls all stages of production for its output. Phelps Dodge and Anaconda are extensively integrated in that wholly owned mine output consists of a large proportion of its output. Phelps Dodge has had a large share in domestic refining, although in 1972 this changed as Newmont Mining started its new refinery in San Manuel, Arizona. ASARCO plays the role of custom smelter and refiner as it mines domestically only some 18 percent of its final production. ASARCO, American Metal Climax, and Cerro process copper scrap into refined copper.

TABLE 6 -1 PRODUCTION AND SALES OF REFINED COPPER FOR THE LEADING CORPORATIONS IN THE UNITED STATES FOR 1971 (SHORT TONS OF COPPER)

Company	Domestic Mine Production	Estimated Smelter Production	Estimated Refinery Production	Estimated Domestic Sales of Refined Copper	Approximate Market Share, As % of Sales	Remarks
ASARCO	66,200	300,000	406,500(1)	406,500	20.2	
American Metal Climax	----	----	182,000(1)	208,000	10.3	
Anaconda	182,000	138,000	210,000(2)	249,000	12.4	
Bagdad Copper Co.	19,800	----	----	----	----	Sells Concentrates to ASARCO
Cerro Corp.	----	----	49,000(1)	49,000	2.4	
Cities Service	49,000	18,000	----	44,000	2.2	
Duval Corp. (Pennzoil Corp.)	124,500	----	----	----	----	Sells Concentrates to ASARCO
Inspiration Consolidated Copper Co.	56,000	96,300(5)	57,000	----	----	Refined Output Sold by Anaconda
Kennecott Consolidated Copper Corp.	456,000	470,000	456,000	488,000	24.3	
Magma Copper Co. (Newmont Mining Corp.)	101,000	102,000	----(3)	101,000	5.0	Refined Output Sold by International Minerals & Metals Corp.
Phelps Dodge	281,200	344,600	526,600	340,000	16.9	
Pima Mining Co.	68,000	----	----(4)	68,000	3.4	Refined Output Sold by Ametalco, Ltd.
White Pine Copper Co. (Copper Range)	58,600	58,000	58,000	58,000	2.9	
Other U.S. Mines	58,100	----	----	----	----	Concentrates Sold to ASARCO, Phelps Dodge
TOTALS	1,520,400	1,526,900	1,945,100	2,011,500		

(1) Secondary scrap and possible foreign blister is included.
(2) Includes Canadian mine production as well as purchased materials.
(3) Refined by Phelps Dodge. In 1972, Magma started its own new refinery.
(4) Smelted and refined by Phelps Dodge.
(5) Smelts Anaconda's Arizona mine output.

SOURCES: Annual Corporate Reports, Moody's Industrial Surveys, American Bureau of Metal Statistics, Private Communication with Individual Companies

TABLE 6-2 SMELTER AND REFINERY[1] STATISTICS--LOCATION, CAPACITY, AND OWNERSHIP

Company/Division	Smelter Location	Smelter Capacity Furnace Charge (TPY)	Associated Refinery for Processing Associated Blister, Anodes	Electrolytic Refinery Capacity, Tons/Year Copper
The Anaconda Company	Anaconda, Mont.	1,000,000	Great Falls, Mont.	190,000
ASARCO	Tacoma, Wash.	600,000	Tacoma, Wash.	156,000
	Hayden, Ariz.	960,000	Atlantic Coast[2]	
	El Paso, Texas	576,000	Atlantic Coast[2]	
Cities Service Corp.	Copper Hill, Tenn.	90,000	----	---
Inspiration Consolidated Copper	Miami, Ariz.	450,000	Inspiration, Ariz[3]	70,000
Kennecott Copper Corp:				
Nevada Mines Division	McGill, Nev.	400,000	Anne Arundel, Md.	276,000
Chino Mines Division	Hurley, N. M.	400,000	Hurley (Fire-Refined)	103,000
Ray Mines Division	Hayden, ARiz.	420,000	Anne Arundel, Md.	(See McGill)
Utah Copper Division	Salt Lake City (Garfield)	1,000,000	Magna, Utah	186,000
Phelps Dodge:				
Douglas Smelter	Douglas, Ariz.	875,000	Custom Smelter	---
Morenci Branch	Morenci, Ariz.	900,000	El Paso, Texas	420,000[4]
New Cornelia Branch	Ajo, Ariz.	300,000	El Paso, Texas	(See Morenci)
Newmont Mining Corp.	San Manuel (Magma Copper)	670,000[5]	San Manuel, Ariz.	200,000[5]
Copper Range	White Pine, Michigan	90,000[6]	White Pine, Michigan	90,000[7]

Footnotes - See next page.

FOOTNOTES - Table 6-2

(1) Three refineries process foreign blister reclaimed scrap and domestic overflows (Western U.S. Blister)--Laurel, N. Y. (Phelps Dodge); 74,000 TPY; Carteret, N. J. (U.S. Metals Refining, Amax); 175,000 TPY Electrolytic; 85,000 TPY Fire-Refined; St. Louis, Mo. (Cerro); 44,000 TPY Electrolytic.

(2) ASARCO has 2 refineries on Atlantic Coast--Perth Amboy, N. J.; 168,000 TPY and Baltimore, Md.; 318,000 TPY.

(3) Smelter overflow goes to International Smelting & Refining, Raritan, N. J.; 150,000 TPY.

(4) Electrolytic capacity; Phelps Dodge also has a 23,000 TPY fire-refined refinery at El Paso, Texas for treating Morenci output.

(5) A third reverb. furnace (385,000 TPY) completed in 1971. Refinery to be on-stream in 1972.

(6) Measured as copper product.

(7) Lake refined.

SOURCE: American Bureau of Metal Statistics, Arthur D. Little, EPA, Industry representatives.

For some firms the degree of vertical integration of production activities extends beyond refining into the fabrication of metal products. Phelps Dodge, Anaconda, Cerro, and Kennecott are important in the fabrication of wire, plate, rod, and sheet products. These four firms collectively account for over 50 percent of sales by wire mills and brass mills.

Finished, unalloyed copper (refined) is produced in three grades--electrolytic, fire-refined, and Lake. Electrolytic copper is refined by electrolytic deposition, remelted, and cast into commercial shapes. Fire-refined copper is refined by oxidation in a furnace, forming a slag containing most of the impurities which is removed, followed by reduction to eliminate most of the oxygen linked with copper as oxide. Lake copper is copper native only in the upper Michigan peninsula. Refined copper is produced from both ores and recovered copper scrap.

Alloyed copper is produced in the form of many types of brasses and bronzes. Old scrap is melted down and cast as various types of alloys. Brass and bronze foundries and brass mills are the producers of alloyed copper.

An analysis of production of the types of refined and alloyed copper for the years of 1962 through 1971 is presented in Table 6-3. Refining of domestic mine output and foreign material (ores and blister) is categorized into electrolytic, fire-refined, and Lake refined. Refined copper from copper scrap is shown separately for primary refineries and secondary smelters. Lastly, alloy production is shown under the heading of non-refined secondary recovery.

A balance sheet for flow of refined copper production is presented in Table 6-4. This table shows data developed from survey reporting of the producing companies for domestic refinery production from domestic and foreign sources, refined imports, copper refined from scrap, and producers' inventories at beginning and end of year. Total supply derived from these sources, exports of refined copper, and domestic consumption estimates based on deductions from total supply for exports and closing inventories are also presented. Sales of copper to GSA are included in the "apparent withdrawal domestic consumption" category.

TABLE 6 -3 ANNUAL TRENDS IN COPPER PRODUCTION ACTIVITIES FOR THE UNITED STATES, 1962 THROUGH 1971 (THOUSANDS OF TONS)

Year	Mine Production	Smelter Production(1)	Primary Refinery Production (From Domestic + Foreign Ores)			Refinery Production From Scrap(2)		Total Refined Production(2)	Nonrefined Secondary Recovery(3)	Grand Total Copper Production(4)
			Electrolytic	Fire Refined	Lake	Primary Plants	Secondary Plants			
1962	1228	1282	1477	67	67	250	40	1901	632	2533
1963	1213	1258	1452	80	64	259	43	1898	672	2570
1964	1246	1301	1510	83	63	300	51	2007	742	2749
1965	1352	1403	1533	107	71	388	57	2156	808	2964
1966	1429	1430	1535	107	69	438	53	2202	843	3045
1967	954	841	1013	66	54	343	63	1539	754	2293
1968	1204	1235	1233	126	78	343	73	1853	802	2655
1969	1545	1547	1523	144	76	413	86	2242	877	3119
1970	1706	1606	1575	124	66	351	61	2277	735	3012
1971	1533	1471	1534(5)	---	58	342	57	1990	714(6)	2704

(1) Domestic ores only.
(2) Unalloyed Copper only.
(3) Copper content only of recoverable brass and bronze alloys and chemical products.
(4) Total U.S. copper production from ores, scrap, and brass and bronze alloys, regardless of country origin.
(5) Includes fire-refined.
(6) Estimated.

SOURCE: Bureau of Mines

TABLE 6-4 PRODUCTION, SUPPLY, AND PRODUCERS' STOCKS OF REFINED COPPER METAL IN THE U.S. (THOUSANDS SHORT TONS)

Year	Producers' Opening Refined Stocks	Refinery Production from Domestic Ores	Refinery Production from Foreign Ores, Blister	Imports of Refined Copper	Total Supply of Virgin Copper	Refined Copper from Scrap	Total Supply of Refined Copper	Exports of Refined Copper	Apparent Withdrawal for Domestic Consumption	Producers' Closing Refined Stocks
1962	64	1214	398	99	1775	433	2208	350	1787	71
1963	71	1219	377	119	1786	416	2202	337	1813	52
1964	52	1260	397	140	1849	422	2271	311	1923	37
1965	37	1336	376	137	1886	513	2399	325	2039	35
1966	35	1353	356	164	1908	535	2443	273	2127	43
1967	43	847	286	331	1507	483	1990	159	1804	27
1968	27	1161	276	400	1864	521	2385	241	2096	48
1969	48	1469	274	131	1922	575	2497	200	2258	39
1970	39	1521	244	132	1936	504	2440	221	2089	130
1971	130	1411	181	164	1886	400	2286	188	2023	75

SOURCE: Bureau of Mines

In terms of U.S. trade balance, this country is a net importer of refined and semi-refined copper, as shown by the "additions to domestic supply" column in Table 6-5. The net imports for the most recent ten years have normally ranged from 6 to 10 percent of total refined supply. During the period of shortages in 1967 and 1968, imports accounted for 20 percent of refined supply.

The domestic tariffs on primary copper products have generally been low. Currently, refined copper imported in the United States is assessed with a tariff of $0.008 per pound. Ores, blister, anode, and scrap are essentially duty-free. However, there are quota limitations on exports. In 1969, exports of refined copper from domestic sources and scrap were limited to 50,000 and 60,000 short tons, respectively.

Foreign tariffs on primary copper products are also generally low. Many countries, such as Scandinavia, Austria, Switzerland, and those of the European Economic Community, admitted unwrought copper duty-free. In Britain, tariff has ranged from zero to 10 percent ad valorem.

In consideration of the nature of operations of copper extraction from ores, estimation of smelter capacity and production/capacity ratios is complex. Based on the available data in literature and on assumptions concerning concentrate analysis for each smelter, estimates have been derived for smelter capacity in terms of copper production. These data are shown in Table 6-6 for 1970 and 1975, along with statistics on 1971 smelter production and related mining capacity data. During the recession year of 1971, smelters operated at 82 percent capacity which compares with 90 percent for the prosperous year of 1970.

Based on recent announcements in the literature, capacity additions at Magma and the new Tyrone, N.M., smelters will offset the potential closure at Douglas, Arizona. Assuming that this smelter will shut down, overall industry capacity will increase from 1,855,000 tons per year to 2,045,000 tons per year. Meanwhile, mine expansions from 1,820,000 ton per year to 2,017,000 tons per year suggest that possible smelting capacity might be ample in 1975.

TABLE 6-5 TRADE BALANCE FOR THE UNITED STATES (THOUSANDS OF SHORT TONS)

Year	Exports[2]	Imports[1]	Additions to Domestic Supply
1962	351	479	128
1963	326	539	213
1964	365	584	219
1965	372	518	146
1966	293	574	281
1967	237	637	400
1968	361	717	356
1969	212	410	198
1970	307	391	84
1971	242	355	113

[1] Concentrates; Regulus; Blister; Refined in Cathodes, Ingots, Bars
[2] Concentrates; Refined in Ingots, Bars, Cathodes; Old Scrap

SOURCE: Bureau of the Census

TABLE 6-6 PRODUCTION/CAPACITY DATA FOR COPPER SMELTERS (1000 Tons of Copper)

Company	1971 Estimated Smelter Production	1970 Estimated Smelter Capacity(1)	Announced Capacity Additions	Possible Closures	1975 On-Stream Smelter Capacity
ASARCO	300	390	---	---	390
Anaconda	138	210	---	---	210
Inspiration	96	140	---	---	140
Kennecott	470	540	---	---	540
Magma	102	190(3)	110(3)	---	300(3)
Phelps Dodge	345	370	100	110	360
White Pine	58	90	---	---	90
Cities Service	18	15	---	---	15
Total Smelters	1527	1945	210	110	2045
Estimated U.S. Mining Capacity(2)		1820	197	---	2017

(1) Arthur D. Little estimates.
(2) American Metal Market.
(3) Correspondence with Magma Copper Co., October 25, 1973.

In light of recent discussions among industry, government agencies, citizens, and court magistrates, it appears that implementation of regulations to meet air quality standards may create a shortfall between smelter capacity and mine capacity or between smelter production and demand. Under some proposed plans, smelters may curtail production at some existing sites in conjunction with the application of acid plant technology on the richer gas streams from smelting operations to meet primary ambient air quality standards.

Refined copper and copper-based scrap are materials used by wire and brass mills to produce copper wire, cable, plates, sheets, strips, bars, and rods. Wire mills produce goods for electrical and communications industries; brass mills, for the machinery, construction, and consumer-oriented industries. In addition, a very small portion of copper is consumed in chemicals production. Statistics on consumption by fabricators are shown in Table 6-7. End-uses of products sold by fabricators are shown in Table 6-8 for: building construction, transportation, consumer and general products, industrial machinery, and electrical-electronic products.

The largest volume of consumption has been in electrical and electronics category. Demand for products in this category grew at a rate of 9.5 percent from 1961 until the labor strike in 1967. The decline in consumption for 1967 and 1968 is related to permanent substitution of aluminum, particularly for power transmission lines. Electrical products manufactured include motors, generators, test equipment, electrical wire for universal application, industrial controls, printed circuits, power distribution equipment, and electronic navigation and communication equipment.

An important area that has enjoyed a high, steady growth at a rate of 8.5 percent for the ten years, has been the consumer and general products category. In spite of the shortages due to strikes and of high prices in the

TABLE 6-7 CONSUMPTION OF REFINED COPPER BY FABRICATORS IN THE UNITED STATES (THOUSANDS OF SHORT TONS)

Year	Apparent Withdrawal for Domestic Consumption(1)	Consumption by Fabricators(1)	Wire Mills	Brass Mills	Foundries & Chemical Plants	Net Consumption by Fabricators(2)
1962	1787	1609	935	634	40	1519
1963	1813	1753	1027	690	36	1569
1964	1923	1864	1111	712	41	1727
1965	2039	2035	1228	767	40	1823
1966	2127	2379	1376	940	63	2134
1967	1804	1982	1274	659	49	1675
1968	2096	1878	1186	654	38	1671
1969	2258	2145	1295	800	50	1926
1970	2089	2027	1324	658	45	1807
1971	2023	2001	1325	647	29	1762

(1)Discrepancies between apparent withdrawal and fabricators' consumption can partially be explained by GSA purchases and sales.
(2)Copper content of fabricators shipments to consumers of finished or semi-fabricated materials produced from purchased refinery shapes as reported by United States Copper Association.

SOURCES: Bureau of Mines, U. S. Copper Association

TABLE 6-8 END USES FOR DOMESTIC COPPER CONSUMPTION[1] FOR MOST RECENTLY AVAILABLE TO-YEAR PERIOD (THOUSANDS OF SHORT TONS)

Year	Building Construction	Transportation	Consumer & General Products	Industrial Machinery & Equipment	Electrical & Electronic Products	Total[2]
1961	482	264	308	399	540	2007
1962	559	266	320	434	562	2203
1963	583	304	344	483	606	2319
1964	677	317	358	502	679	2640
1965	702	359	423	513	737	2800
1966	713	387	461	548	846	3152
1967	577	395	650	433	704	2694
1968	559	305	675	426	708	2696
1969	630	344	659	469	797	2958
1970	574	367	695	439	758	2620

(1) Consumption figures include refined copper and recovered copper-based alloys.

(2) All values presented in actual copper weights.

SOURCES: Copper Development Association, Charles Rivers Associates

late sixties, demand for products in this category seemed unabated. Products in this category include jewelry, cookware and cooling utensils, clocks, watches, coinage, decorative applications, and various and sundry types of gages and instruments.

Overall, the annual growth rate (compounded) for consumption of copper in both refined and unrefined forms has been 3.2 percent, based on simple linear regression of data for the years of 1961 through 1970. This growth rate over a cyclical period takes into account two business recessions, one armed conflict, and one major labor strike, all of which caused upsets in supply-demand balances and price distortions.

Based on the performance of the U.S. economy in general for the last ten years, an assumption of a 3 percent growth rate seems reasonable in light of the expected annual 4 percent rate of increase in real growth through 1980 by the Department of Commerce. This rate of increase has been the experience of the 1960's.

Copper is an international commodity and its price is sensitive to competitive forces between ever-increasing demands by consumers, particularly in affluent economies, and rather rigid, oftentimes unreliable, sources of materials. Hence, price distortions are expected at times during political upheavals in underdeveloped countries and labor strikes, which constrict supplies, or wars and armed conflicts, which require copper for ordnance.

Key prices that are often watched by merchants, speculators, economists, and analysts are the London Metal Exchange (LME) price for electrolytic wirebars and the U.S. producers' price as set by the major domestic producers. Copper scrap prices are also closely watched, as they reflect the supply of secondary sources of copper. The LME, the producers', and No. 2 scrap prices are shown in Figure 6-1.

An explanation of these different price indicators follows. The LME is a cash (or spot) price determinant based on merchants' inventories in London warehouses. In volume, these stocks constitute no more than 3 or 4 weeks of available supply for a consumer of the magnitude of the U.S. economy. By its nature, then, the LME represents a marginal price transaction, thus a short-term indicator. Other price indicators, such as the No. 2

Figure 6-1 Quarterly price movements for electrolytic wirebars and No. 2 copper scrap.

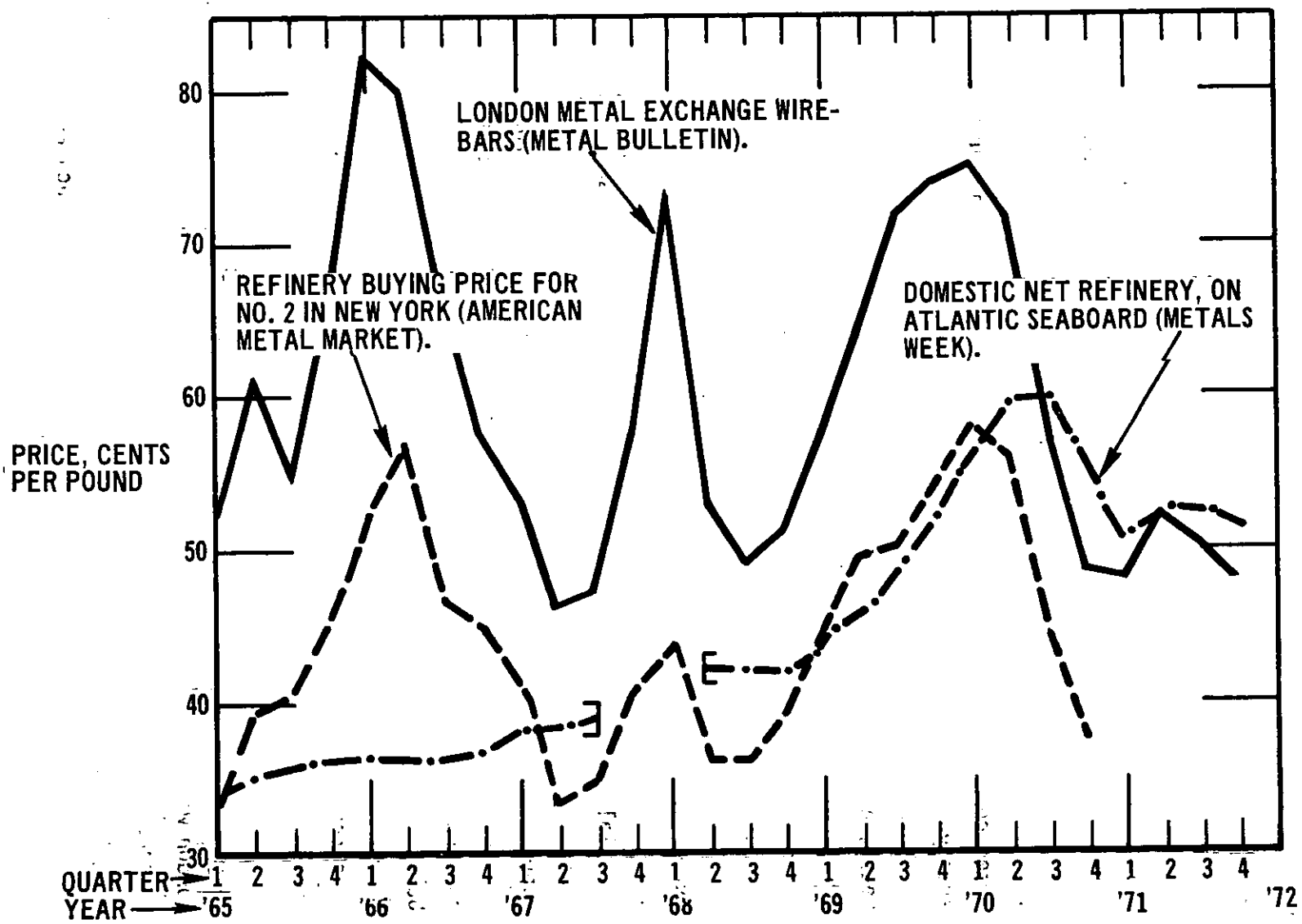

scrap price (one of several price quotations published by American Metal Market for various grades of copper, brass, and bronze scrap) and the New York Commodity Exchange price (COMEX, quoted daily in the Wall Street Journal) for the merchants' auction market in the U.S., move harmoniously with the LME indicator.

The domestic producers' price is a firm price for contracts with large-volume consumers of refined metal that is set by the major producers, such as Phelps Dodge or Kennecott. This price takes into account the long-term price level, reflecting producers' supply capabilities, costs, and profitability, that will assure copper consumers adequate supplies at a fair cost (to the consumer) without irreversible substitution to another metal during any prolonged shortage.[1] The major producers will watch inventory statistics and price indicators, like the LME or the COMEX, for any noticeable change in available inventories in the hands of merchants, scrap dealers, etc., and will accordingly adjust their prices. This is illustrated by the long-term rise indicated by the 3 movements in Figure 6-2 for the period of September 3, 1968, through October 1, 1970, and the resultant re-adjustment.

Under the assumption that demand pressures were strong world-wide, a minimum price difference of approximately 2 cents between the COMEX and LME tends to support the supposition of 2 cents per pound for shipping copper between transocean points. (The fall of price during 1970 is a disequilibrium phenomenon as merchants and producers were trying to deplete heavy inventories.) Late in 1972, after market equilibrium was restored, the U.S. producers' price stabilized at approximately 3 cents above the LME, a difference which takes into account tariff and shipping.

In the cost structure of copper production, a division between mining and extraction seems the most simplistic way for understanding mechanisms of transferring increased costs of pollution control. Mining is that portion of the operation that consists of breaking up ores and produces concentrates for smelting. Extraction, for purposes of discussion, includes the smelting and refining of copper. Extrusion, rolling, and general fabrication is another operation beyond the scope of this work.

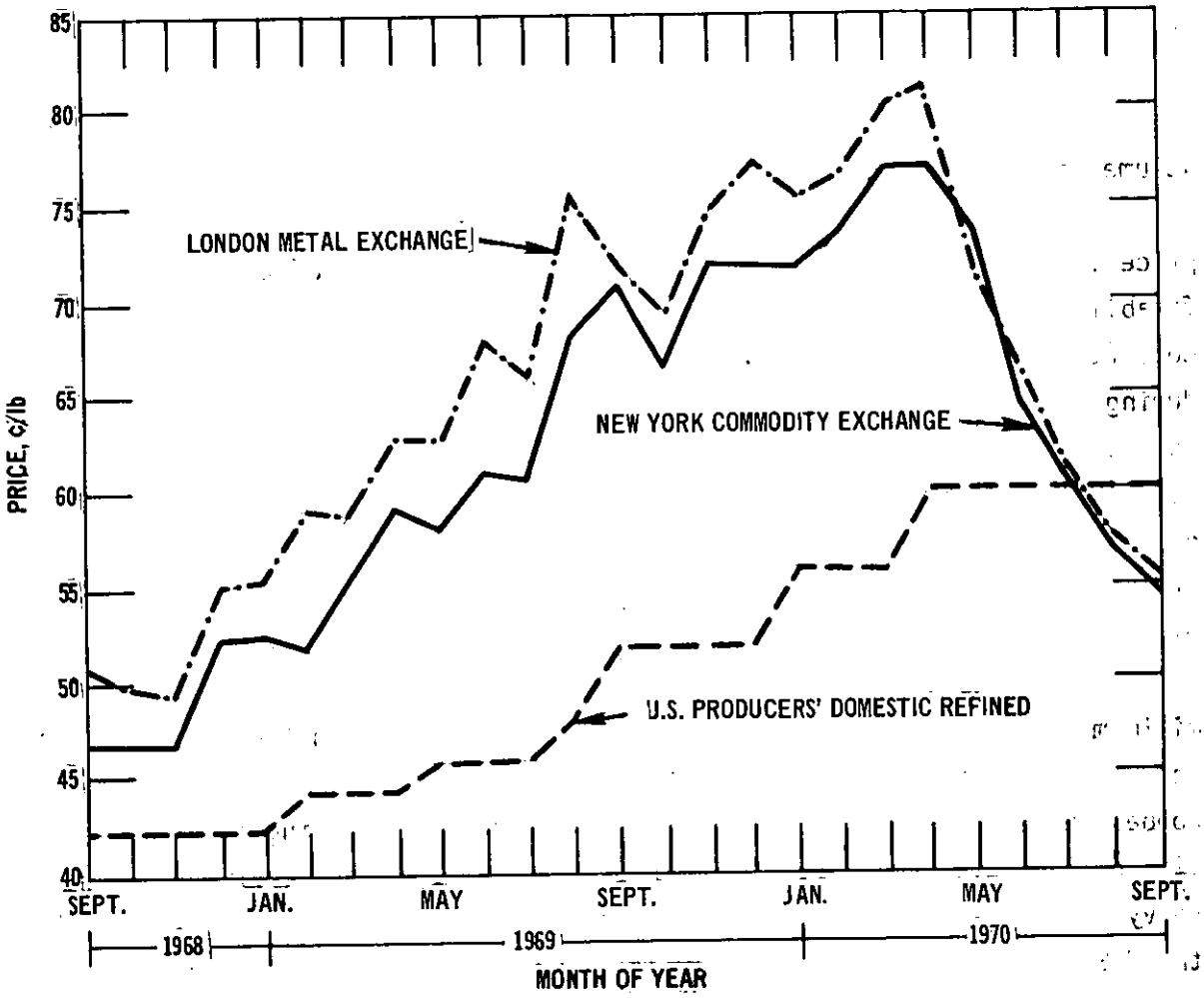

Figure 6-2 Price movements for refined wirebars on a monthly basis for two major-action markets and U.S. producers, September 1968-September 1970.

In the copper industry, mining costs are generally in inverse proportion to the copper content of an ore body. The smaller the content of copper, the higher are the quantities of earth material that have to be crushed, hauled, and separated to produce a unit of copper. U.S. mineable ores average about 0.54 percent copper. In Africa, ores may be as high as 2 to 3 percent in copper. Other factors are also important besides the copper content. These include the by-product values, such as the recoverable quantities of gold, platinum, silver, tellurium, molybdenum, and many others. Negative by-product factors are sometimes present, such as arsenic.
These factors are negative in the sense that ores containing these materials are limited to potential smelter markets because of the difficulty in handling arsenic, etc. Transportation is important. Beneficiation mills, which are located at mine sites, are important in production of concentrates that will assist in transporting copper values to smelter markets at minimum costs.

Mining costs are not uniform in the United States. For the major companies' mines, mining costs range from 23 to 40 cents per pound metal, according to Arthur D. Little.

Turning aside to the smelting and refinery of copper, some semblance of an income statement must be developed to assess the impact of air pollution control. Statistics presented in Table 6-9 for an eight-year period for smelters and refiners provide background information on the cost of materials, wages, capital expenditures, overhead and profit. This information, coupled with data from corporate annual reports, can be used to develop a model income statement for a smelter. The income statement simulated for a model smelter-refiner complex is shown as follows:

Model Income Statement ($1000's)

	Total Amount	Unit Cost, ¢ per lb
Sales[a]	104,000	52.0
Cost of Concentrates	84,000	42.0
Payroll, fuels, parts, repairs	10,400	5.2
Selling, general, administ.	3,000	1.5
Plant Depreciation	3,000	1.5
Operating Profit	3,600	1.8
Taxes	1,800	0.9
Net Earnings after Taxes	1,800	0.9
Cash Flow	4,800	2.4

[a] Based on 100,000 tons of copper per year

TABLE 6-9 SELECTED STATISTICS AND OPERATING RATIOS, 1960-1967
(S.I.C. 3331 PRIMARY SMELTING AND REFINING OF COPPER)

Year	Value of Shipments ($ Million)	Total Number of Employees (1000)	Total Payroll ($ Million)	Total Payroll Per Dollar of Shipments ($)	Number of Production Workers (1000)	Production Worker Wages ($ Million)	Wages Per Dollar of Shipments ($)	Cost of Materials ($ Million)	Capital Expenditures ($ Million)	Cost of Materials Per Dollar of Shipments ($)	Capital Expenditures Per Dollar of Shipments ($)
1960	1134	16.1	93.8	0.083	13.8	74.0	0.065	924	10.3	0.81	0.009
1961	1169	15.4	92.8	0.079	12.9	72.4	0.062	923	15.1	0.79	0.013
1962	1207	15.3	95.9	0.079	12.8	75.7	0.063	961	10.4	0.80	0.009
1963	1245	14.9	96.1	0.077	12.7	77.9	0.063	970	13.1	0.78	0.011
1964	1363	14.9	96.4	0.071	12.7	77.7	0.057	1077	9.2	0.79	0.007
1965	1584	15.2	105.1	0.066	13.1	85.1	0.054	1307	16.7	0.81	0.011
1966	1701	15.8	113.7	0.067	13.4	91.9	0.054	1349	39.9	0.79	0.023
1967	1184	11.6	80.6	0.068	9.2	61.0	0.052	935	51.7	0.79	0.044

SOURCE: Census of Manufacturers (U.S. Department of Commerce)

This statement, developed for a custom smelter-refiner, would be equivalent to operations in a vertical integrated company. The most important point reflected in the above statement is that the value added at the smelter-refiner complex (about 10¢ per lb) is constant regardless of fluctuating copper prices. Furthermore, this increment seems fairly uniform from location to location in the United States.

Consumption is expected to grow through 1980 at 3.2 percent compounded annually, based on previous performance and expected 4 percent growth in Gross National Product (GNP). Assuming that the contribution from primary and secondary sources will not change from the present patterns, smelter production will have to increase from the 1,500,000-ton rate in 1971 to approximately 2,000,000 tons in 1980.

Likely on-stream capacity available in 1975 will be approximately 2,045,000 tons per annum. Assuming an operating ratio of 0.80 to 0.90, total capacity to supply 1980 needs is estimated at 2,200,000 to 2,500,000 tons per annum. The conclusion is that an additional 150,000 to 450,000 tons of capacity will have to be supplied in the form of smelter expansions, new domestic, or foreign smelters.

Phelps Dodge recently announced plans to construct a new grass-roots smelter at Tyrone, New Mexico, and it is very probable that an additional grass-roots smelter will be built to handle the outputs of Southwest U.S. mines. In recent years, this is the area where new mines have been developed. Many of these mines which sell concentrates to a custom smelter are owned by firms too small in mining activities as a result of limited capital resources or pursuits in oil production or manufacturing. Only recently Bagdad and Cyprus Mines (whose Pima Mining Company operates in Arizona) consummated a merger. Similar corporate combines might eventually evolve in a consortium with sufficient capital resources to build a new town-site smelter. Cyprus Bagdad has recently expressed intentions of building a smelter.

With regard to existing smelters, expansion in added capacity has been provided at San Manuel, Arizona, and Anaconda, Montana. Magma has built an electrolytic refinery capable of producing 200,000 tons per year. Capacity for 1975 at San Manuel is scheduled at 300,000 tons per year. Anaconda has announced plans to test a hydrometallurgical unit in Montana. Their intentions indicate expansion of facilities in that state.

In the late 1960's, new mines were opened in Canada and the South Pacific (viz., Bougainville and West Iran. Based on data available, 95,000 tons of Bougainville's projected 180,000 tons annual output is contracted for Japan through 1975. This one sample indicates opportunities for capital investment (provided by U. S., Japanese, or other foreign firms) in new smelting facilities overseas for purposes of shipping metal to the U. S. American companies from time to time have been investigating overseas mining prospects in Australia and Iran.

In order to supply projected 1980 demand for refined copper, an additional 150,000 to 450,000 tons will have to be supplied annually from foreign imports, increased scrap recovery and domestic mines expansion. However, in terms of industry growth beyond 1975, it is difficult to project the mix among the various sources of supply to satisfy the increased demand. The potential increased utilization of hydrometallurgy adds another factor of complexity into the forecast. A general consensus within the domestic industry, however, appears to indicate the possible construction of one or two new pyrometallurgical smelters to provide an additional 200,000 tons of copper annually by 1980. It is expected that new mine development and corporate arrangements, such as the Cyprus Bagdad situation, will provide the impetus for construction of new grass-roots smelters.

As for expanding developments at existing mines, it is expected that incremental expansions at existing smelters will handle incremental mine output over the next few years. Aside from the electric furnace installation at Inspiration, possibly another

electric furnace at Anaconda, Montana, and a possible new Noranda type of continuous smelter at the Kennecott Utah smelter, no company is expected in the next few years to build a grass roots smelter at existing mine smelter complexes.

6.1.2 Cost Analysis of Alternative Control Strategies

The financial expenditures necessary to control sulfur dioxide emissions are developed in this section for four basic types of pyrometallurgical smelters. Cost estimates are developed for capital expenditures based on the construction of new town-site smelters. Additionally, various control alternatives achieving sulfur dioxide control efficiencies from 70 to 99^{+} percent (assuming total capture by exhaust hoods, no fugitive emissions, and no downtime in control equipment) are costed for these four basic smelter types.

The model smelter is based on processing 1000 tons per day of new metal-bearing material of the following analysis:

1.	Copper (Cu)	- 27%
2.	Iron (Fe)	- 28%
3.	Sulfur (S)	- 32%
4.	Silica	- 8%
5.	Alumina	- 2%
6.	Other	- 3%
7.	Precious Metal Values	- minute quantities

Based on discussions with consultant engineers, it appears that a smelter of this capacity is representative of the smallest viable operation that could be built today.[2] Thus, in this respect, this development is biased somewhat toward identifying high costs with various levels of sulfur dioxide control, since larger installations would be able to take advantage of the inherent "economies-of-scale" associated with building large sulfur dioxide control systems. The concentrate analysis, however, may be considered "typical" of concentrates available in the southwestern United States. Although variations in concentrate analysis, such as the ratio of copper to sulfur, for example, significantly influence the control costs associated with various levels of sulfur dioxide control, these variations are not taken into account. Rather than examine the extremes,

or biasing the results toward one extreme or the other as in the case of smelter capacity, the development is based on an "average" or "typical" concentrate which should lead to "average" or "typical" control costs. Consequently, the control costs developed are considered to represent, for the most part, "average" or "typical" order-of-magnitude costs.

The model smelter produces approximately 86,000 tons of copper per year (260 tons per day) and generates 620 tons per day of sulfur dioxide. This assumes a 2 percent loss of copper and 3 percent loss of sulfur in slag products.

Order-of-magnitude estimates of capital investment have been developed based on the available literature and contact with construction firms, consultants, industry representatives, and the American Mining Congress. Tabulated costs of various elements in the construction of the basic four types of smelters are presented in Table 6-10 in 1973 dollars.

The data in Table 6-10 are assembled to show the total capital for a grass roots smelter, added capital for pollution control (all off-gases), and town-site investment requirements. Cost data for new, complete town-site smelters for the four basic technologies are as follows:

Technology	Capital ($ millions)
1. Flash Smelting	99-108
2. Hot Calcine Reverberatory Smelting	100-112
3. Green Charge Reverberatory Smelting	98-110
4. Electric Furnace Smelting	90-98

These data show that flash smelting and electric smelting have a slight advantage in lower capital requirements than the conventional reverberatory smelting methods.

TABLE 6-10 ELEMENTS OF CAPITAL COSTS FOR SMELTER TECHNOLOGIES ($1000's)

Total Direct Costs	Flash Smelter	Electric Furnace Smelter	Green Charge Reverb Smelter	Hot Charge Reverb Smelter	Comments
A Concentrate & Flux Handling	1600	1600	1600	1600	
B Dryer & Air Preheater	1280	1280	----	----	
C Furnace & Waste Heat Boiler	5900	5300-6700	4600	4700	Electric Furnace Includes Substation, No Waste Heat Boiler
D Flue Gas & Dust Handling	1900-3400	1600-2700	3000-5300	2100-3800	Hot Gas Fans, Electrostatic Precipitators, High Velocity Flues, Dampers, Gates, Radiant Cooling
E Converter Aisle	5000	5000	5000	5000	Includes 3-13x30 Pierce Smith Converters, Converter Crane, Platforms, Blowers, Conventional Uptakes
F Anode Casting Facility	1200	1200	1200	1200	2 Holding Furnaces, Casting Wheel
G Fluo-Reactor	----	----	----	3400	
H Power Plant	2700	----	4000	2900	
I Slag Plant	2700	----	----	----	
J Miscellaneous Facilities	1300	1300	1300	1300	
K Site Clearance	1100	1100	1100	1100	
L Electrical Wiring	2100-3400	2100-3400	2100-3400	2100-3400	
M Buildings & Plant Facilities	1100-2100	1100-2100	1100-2100	1100-2100	
Total Direct Costs	30,000	24,100	27,300	28,600	

TABLE 6-10 (Con't) ELEMENTS OF CAPITAL COSTS FOR SMELTER TECHNOLOGIES

Total Direct Costs	Flash Smelter	Electric Furnace Smelter	Green Charge Reverb Smelter	Hot Charge Reverb Smelter	Comments
Construction, Supervision & Equipment	4500	3600	4100	4300	15% of Direct Costs
Engineering & Home Office	4200	3400	3800	4000	14% of Direct Costs
Indirect Costs	10,500	8500	9500	9900	Start-up Contingency, Administrative, Expenses, Fees (35% of Directs)
Total Capital	49,100	39,600	44,700	46,800	
Added Capital for Pollution Control	12,800-16,000	12,800-16,000	16,000-22,500	16,000-22,500	Required to Achieve 90-95% Control(1) (excluding acid neutralization)
Added Capital for Townsite Smelter	37,500-42,800	37,500-42,800	37,500-42,500	37,500-42,800	Land, Townsite, Utilities (Town), Waste Treatment Plant, Highways, Railroads, Office Buildings, Warehouse, Maintenance, Power Plant (Town & Smelter), Wells, Slag Disposal Area

SOURCES:

(a) Flash furnace technology - References 2, 3, and 4.
(b) Electric furnace technology - References 5 and 4.
(c) Conventional reverberatory smelting technology - References 2 and 6.
(d) General cost information on auxillary equipment - References 4, 6, and 7.

Notes:

(1) Assuming total capture by exhaust hoods, no fugitive emissions and no downtime of control equipment.

Order-of-magnitude estimates are presented here for the direct operating costs of flash smelting vs conventional green charge reverberatory smelting:

Item	Flash Smelter ($1000's)	Green Charge Smelter ($1000's)	Unit Cost
Supervision	132	168	$12,000/yr
Operating Labor	1001	889	$3.75/hr
Fuel	235	915	40¢/MCF
Power	366	--	1¢/kwh
Flux	456	1630	$15/ton
Maintenance Labor	443	375	$3.75/hr
Supplies	455	465	---
Copper Losses (Slag)	688	1380	50¢/lb
Steam Credit	(105)	--	1¢/kwh
Total (Actual)	3671	5822	
(Unit Basis)	2.1¢/lb	3.4¢/lb	

SOURCE: Lummus International

These data suggest a cost advantage of 1.3 cents credited to flash smelting, although discussions with the Magma Copper Company indicate that cost advantages narrow to 0.4-0.5 cents. However, this does not take into account pollution control, plant overhead, plant amortization, nor refining and shipping. Slag treatment costs (direct operating expenses) are included for flash smelting.

The problem of controlling emissions of sulfur oxides from copper smelters has many facets in an economic sense. The difficulty of pollutant capture is one of those facets. Pollutant removal from the gas stream and its ultimate disposal constitute another facet to the overall problem of controlling smelter gas. To provide an overview of these facets, the economics associated with several control alternatives for each of the four basic types of pyrometallurgical smelters were developed. Sulfuric acid plants, sulfur plants and dimethylaniline (DMA) scrubbing units comprise the basic process modules used to construct the various control alternatives.

Due to the potential oversupply problems inherent in sulfuric acid manufacture at the western copper smelters, neutralization requirements were analyzed in those control alternatives incorporating acid plants.

The capital and operating cost requirements for limestone neutralization were developed from industry data and include the costs associated with the mining of limestone in addition to those associated with the neutralization of sulfuric acid.[8] The operating cost requirements, however, assume that the limestone deposit is in close proximity to the smelter and thus reflect low transportation costs. Although limestone may be in plentiful supply, as indicated in discussions with the Bureau of Mines,[9] it is possible that transportation costs could increase the costs associated with limestone neutralization above those used in this analysis to some extent. However, even in those cases where specific smelters might be faced with high transportation costs for limestone, it is expected that the overall emission control costs, including sulfuric acid neutralization, would still be of the same order of magnitude as those developed for the various model smelters.

Sulfur plants were included in several of the control alternatives as an alternative to the production of sulfuric acid. The economics are based on sulfur plant technology similar to that commercialized by Allied Chemical at the Falconbridge Nickel smelter in Canada.

In order to limit the number of models developed, only DMA scrubbing was considered in this analysis. It is expected that the costs associated with DMA scrubbing are similar to those associated with other scrubbing systems such as sodium sulfite/bisulfite and ammonia. This scrubbing system produces a concentrated sulfur dioxide stream ($\sim$ 100%) which can be used as feed to a sulfuric acid plant or sulfur plant.

The first step toward determining cost requirements of various control alternatives is to examine the basic process modules mentioned above, which are used to construct the various control alternatives. Capital estimates for turn-key projects derived for typical flowrates of either total gas or sulfur are presented in Table 6-11 with their respective scale exponents for extrapolation. The data have been scaled to 1973 dollars by using an annual inflation rate of 6.7 percent in construction costs. The information source for basis of the estimate is cited. Site clearance and hook-up of available off-site facilities are included in the estimates.

TABLE 6-11 CAPITAL COSTS AND OPERATING REQUIREMENTS FOR CONTROL PROCESSES

	Single Stage Acid Plant	Dual Stage Acid Plant	Elemental Sulfur Plant	Elemental Sulfur Plant	Dimethyaniline Absorption	Wet Cleaning Plant(2)	Unit Cost Factors
Plant Size	100,000 SCFM	100,000 SCFM	15,000 lb sulfur/hr (90% SO_2 in feed)	15,000 lb sulfur/hr (15% SO_2 in feed)	50,000 SCFM (5% SO_2 in feed)	50,000 SCFM	
Capital, $MM(1)	9.00	10.3	2.56	5.60	12.0(3)	2.54	
Capital Scale Factor	0.63	0.63	0.58	0.58	0.70	0.68	
Basis for Capital Estimate	Ref. 11	Ref. 12, 13	Ref. 14	Ref. 14	Ref. 15, 16	Ref. 11	
Basis for Utils.	Ref. 11	Ref. 13	Ref. 14	Ref. 14	Ref. 11, 14	Ref. 11	
Direct Operating Items							
Methane			13.4 MCF/Ton S	18.4 MCF/Ton S			40¢ per 1000 MCF
Electricity	4020 kw	4800 kw	40 kwh/Ton S	181 kwh/Ton S	1230 kw	300 kw	1¢ per kwh
Steam					14.7 Mlbs/hr		80¢ per Mlbs
DMA					12.6 lb/hr		26¢ per lb
Caustic Soda							$80 per ton
Soda Ash					0.20 ton/hr		$35 per ton
Sulfuric Acid					0.23 ton/hr		$15 per ton
Process Water	50,000 gal/hr	50,000 gal/hr		860 gal/ton S			50¢ per 1000 gal
Raw Water						25,000 gal/hr	25¢ per 1000 gal
Cooling Water	224 gal/ton S	224 gal/hr S	1700 gal/ton S	3600 gal/ton S	103,000 gal/hr		5¢ per 1000 gal
Catalysts			3.8 lb/ton S	3.8 lb/ton S			13¢ per lb
Operating Labor	72 manhours/day	72 manhours/day	54 manhours/day	54 manhours/day	24 manhours/day	24 manhours/day	$5 per manhour
Maintenance	6% of Capital	6% of Capital	5% of Capital	5% of Capital	6% of Capital	8% of Capital	

(1) Battery limits costs, including site clearance and hook-up of available off-site facilities.

(2) Wet cleaning plant capital must be added to capital for DMA and Sulfite/Bisulfite scrubbing units that receive smelter off-gas directly.

(3) Capital for a plant accepting 1.5% SO_2 feed (50,000 SCFM) would be $9.1 MM; operating requirements remain same as reported for the plant here with 5% SO_2 feed.

Operating costs are also presented in Table 6-11. The literature basis for utility requirements is referenced. Prices of utilities and labor have been taken as assumed in the Fluor study,[10] which developed the earlier mentioned utility requirements. Prices of commodities are based on current quotations in the Oil, Paint, and Drug Reporter (October 1972).

Various combinations of emission control processes were assembled for the four basic smelter type configurations and are presented in Figures 6-3 through 6-6. Based on physical process parameters developed from material balance data, cost estimates were derived for these control combinations. Total capital and operating costs are presented in Table 6-12. In addition, the overall control of sulfur dioxide emissions, expressed as a percent, achieved with each control alternative is summarized. It is to be noted, however, that these percentages are theoretical in nature and are based on the assumptions of total capture by exhaust hoods with no fugitive emissions and no downtime of the control system. As a result, these overall control efficiencies are not representative of what could be achieved in actual practice, but are for discussion or comparative purposes only. For example, an EPA survey revealed fugitive emissions varying between 0% to 15% at existing domestic smelters.

Table 6-12 also presents control costs expressed in terms of cents per pound of copper produced and in terms of cents per pound of sulfur dioxide controlled. Finally, this table also presents various incremental control costs in terms of incremental cents per pound of copper produced and in terms of incremental cents per incremental pound of sulfur dioxide recovered. The basis for these incremental costs is explained in the footnotes to the table.

The costs presented represent incremental costs associated only with the treatment of pollutants. The cost of tight-fitting, water-cooled hoods have been included although other pieces of gas collection devices, such as headers, balloon flues, and ducts, have not. Cost differences relevant to the various modes of furnace and converter operations have not been taken into account.

Figure 6-3 Model copper smelting facilities-electric smelting options

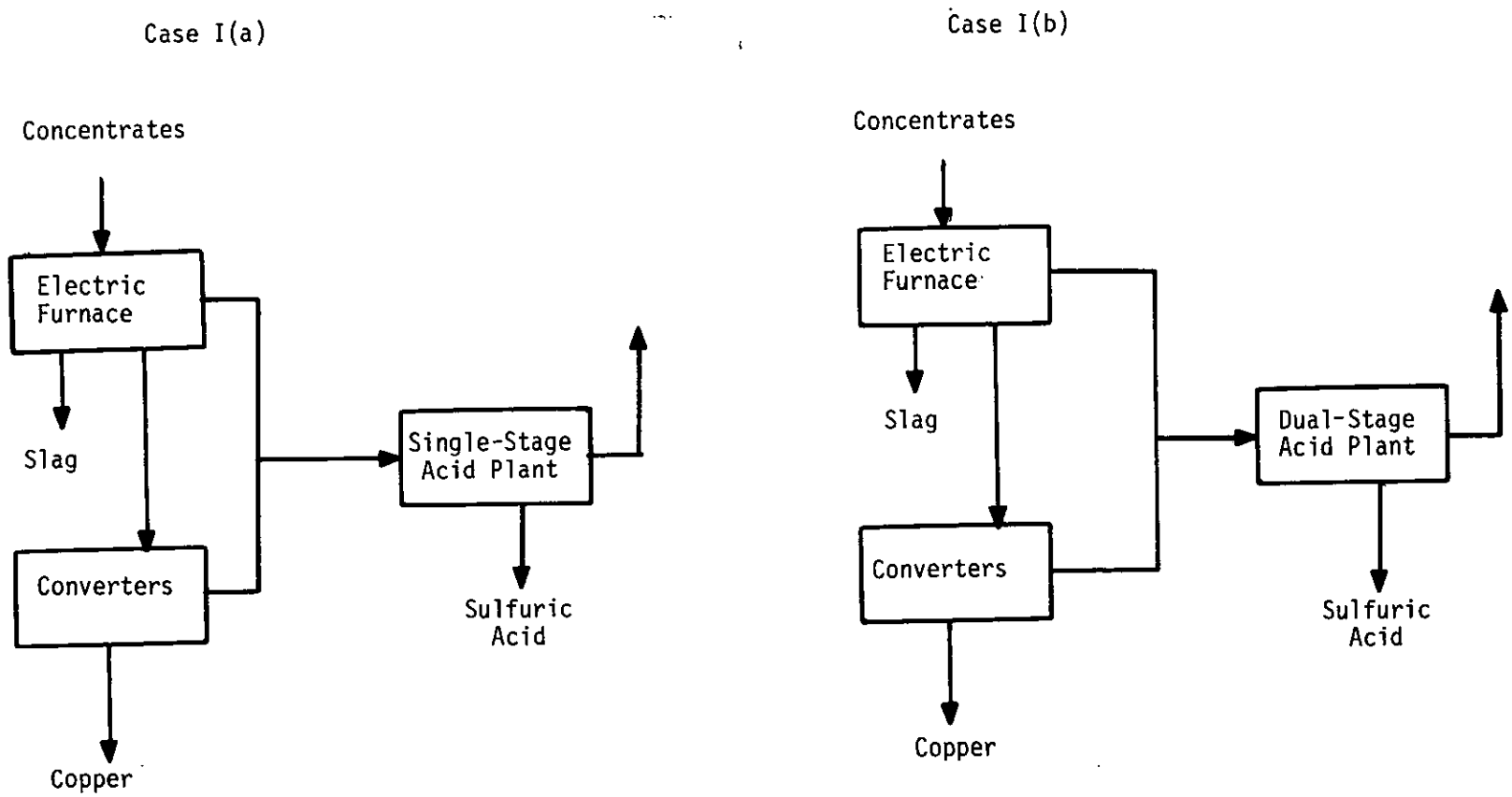

Figure 6-3 (Con't) Model copper smelting facilities-electric smelting options

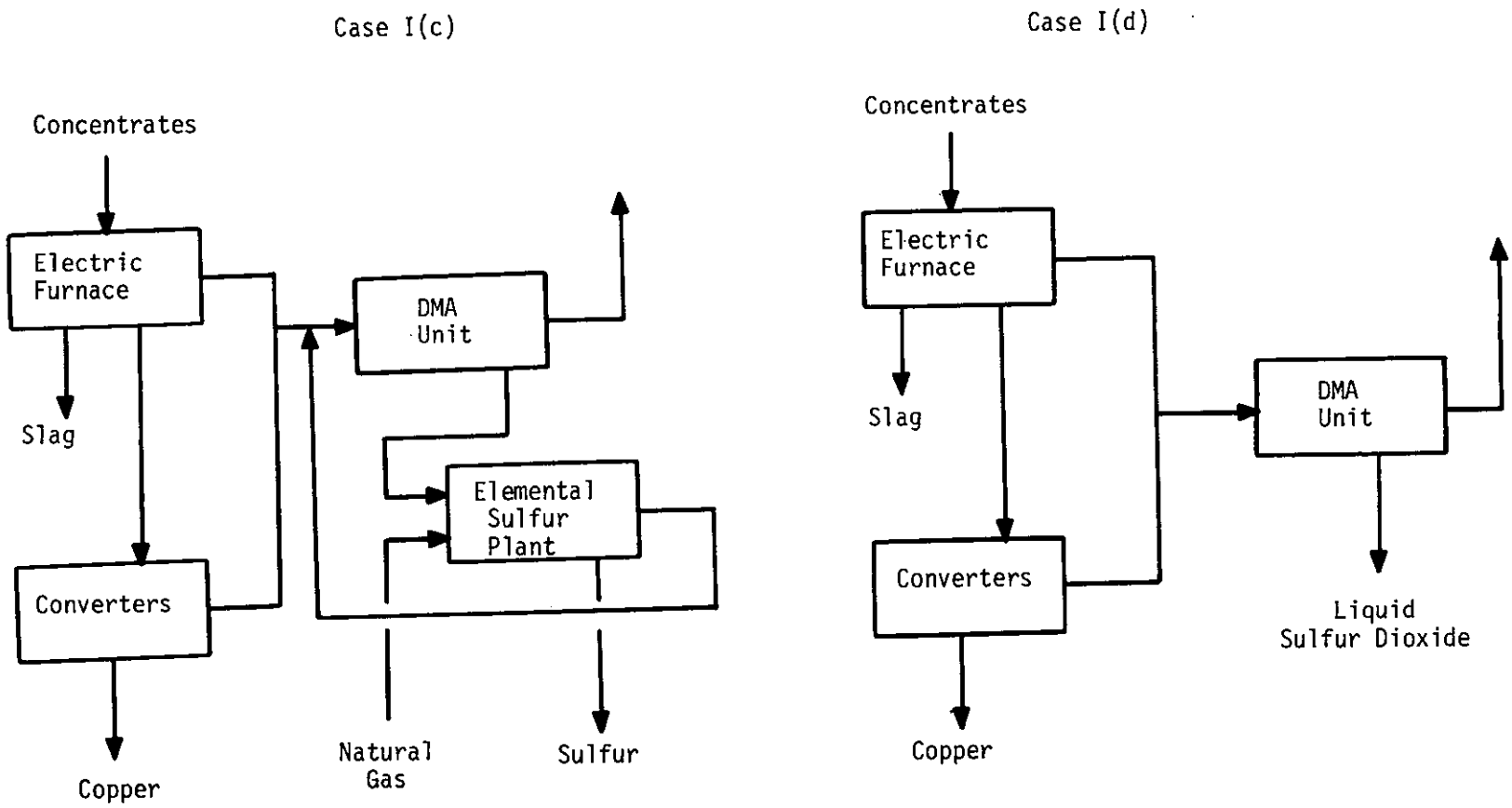

Figure 6-4 Model copper smelting facilities-flash smelting options.

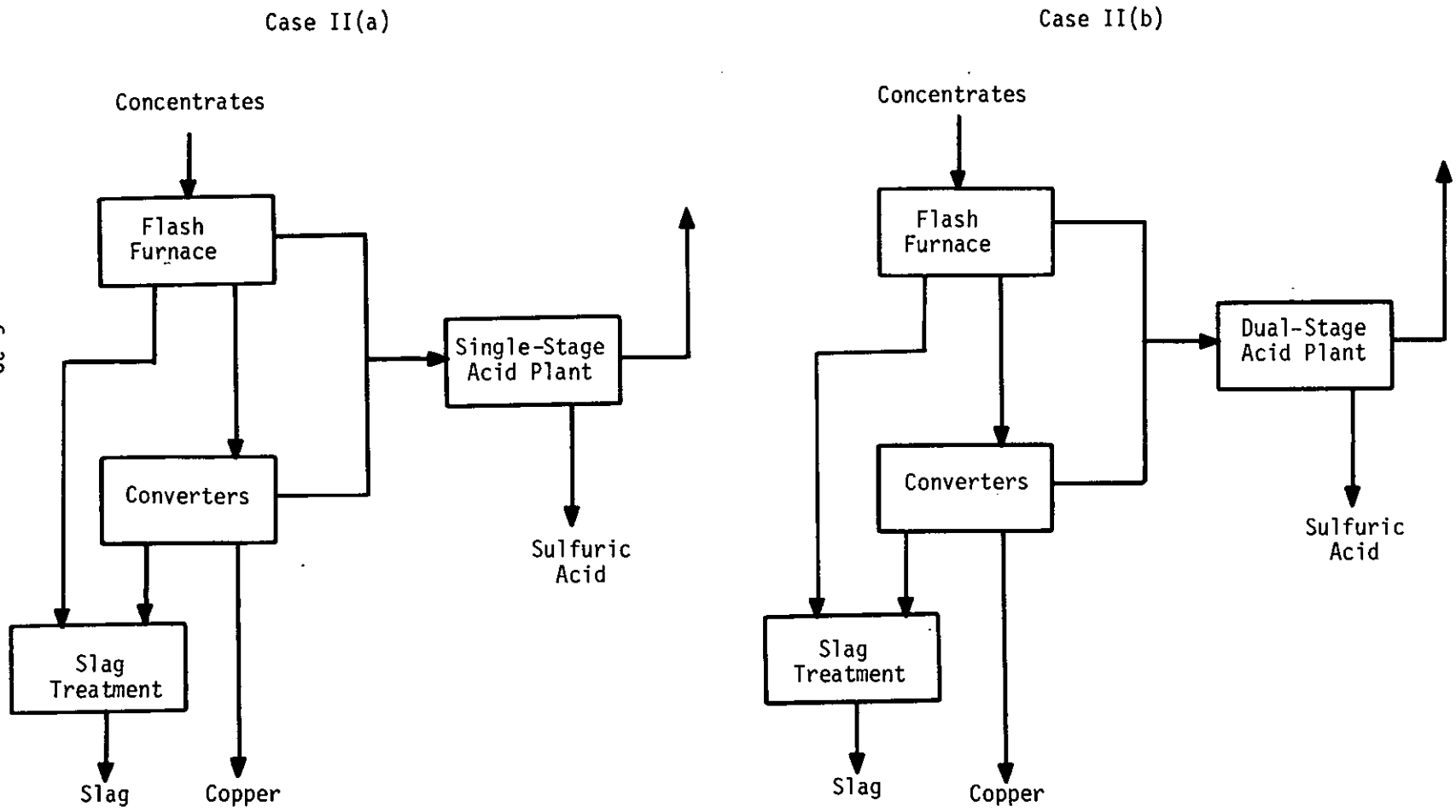

Figure 6-4 (Con't) Model copper smelting facilities-flash smelting options.

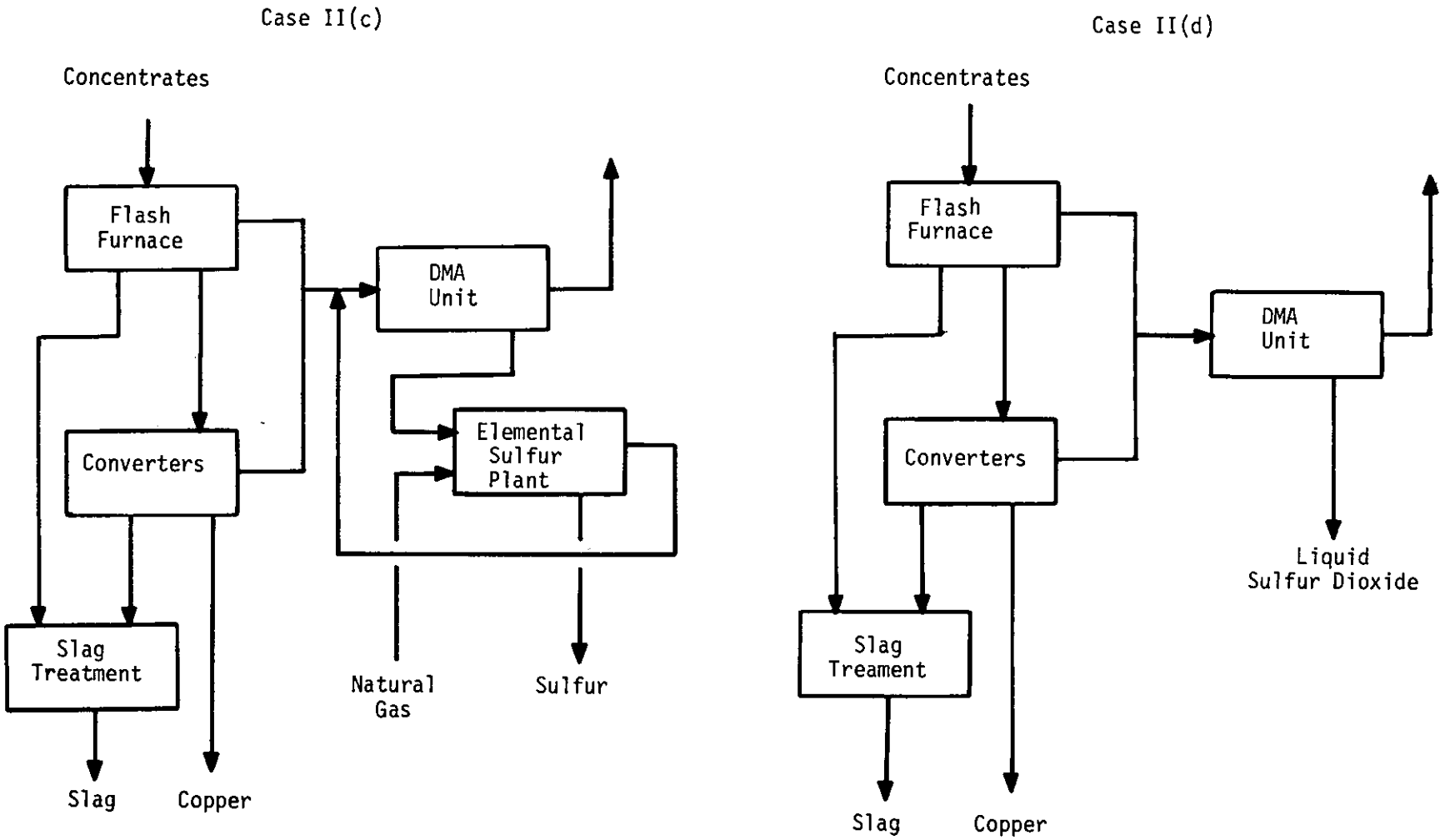

Figure 6-5 Model copper smelting facilities-roaster/reverberatory smelting options.

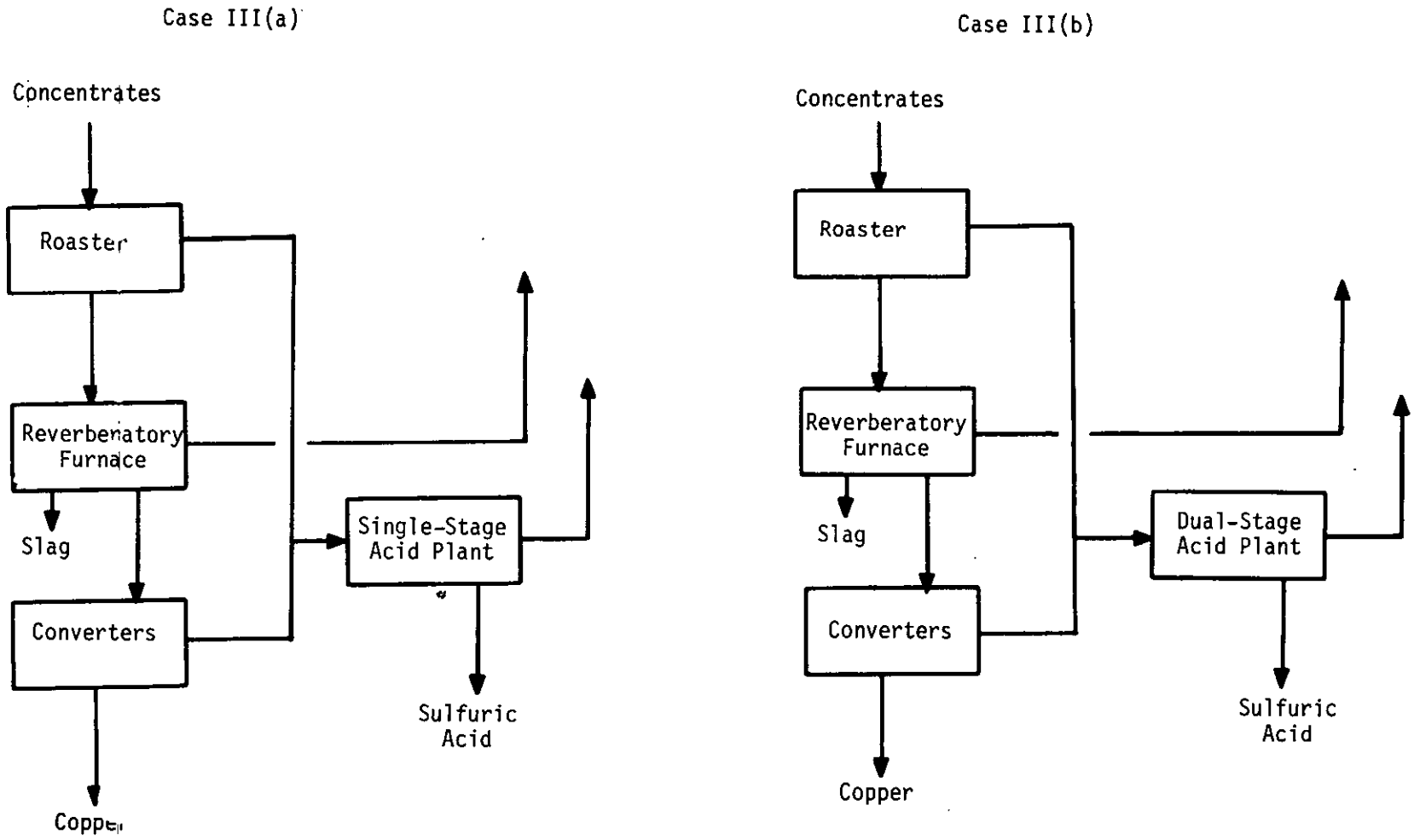

Figure 6-5 (Con't) Model copper smelting facilities-roaster/reverberatory smelting options.

Case III(c)

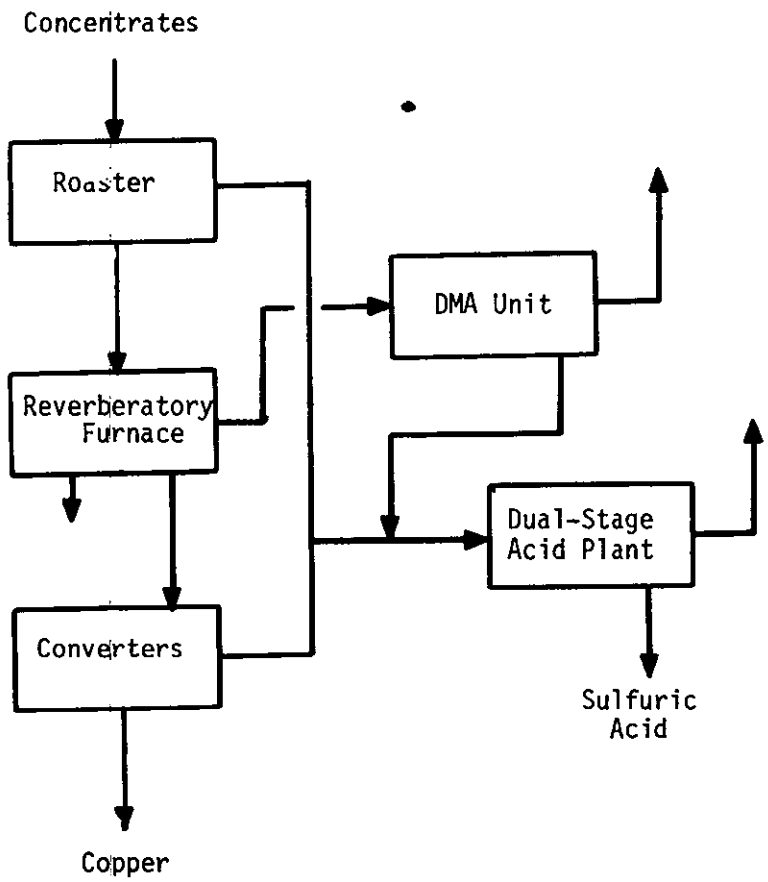

Figure 6-6 Model copper smelting facilities-reverberatory smelting options.

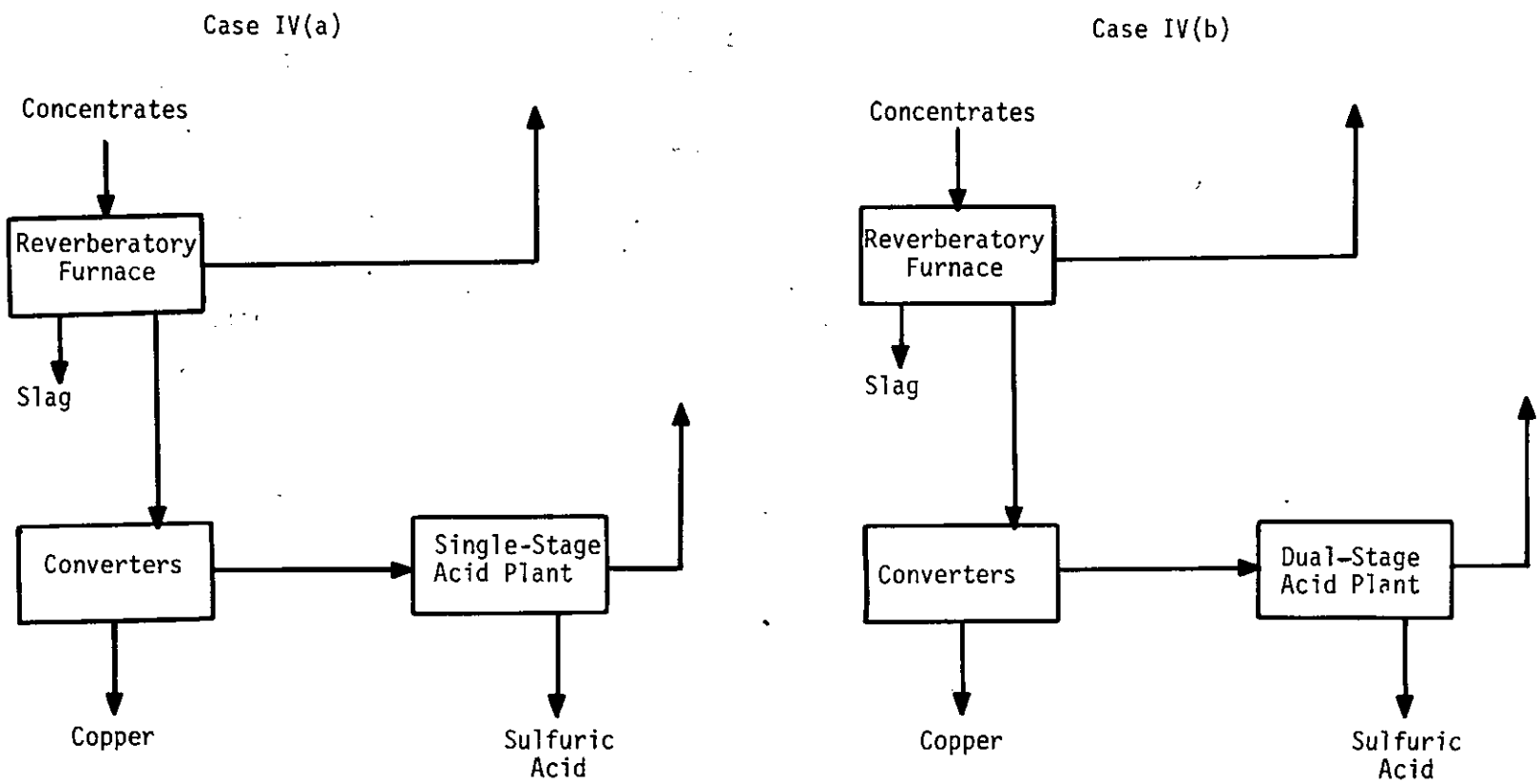

Figure 6-6 (Con't) Model copper smelting facilities-reverberatory smelting options.

Case IV(c)

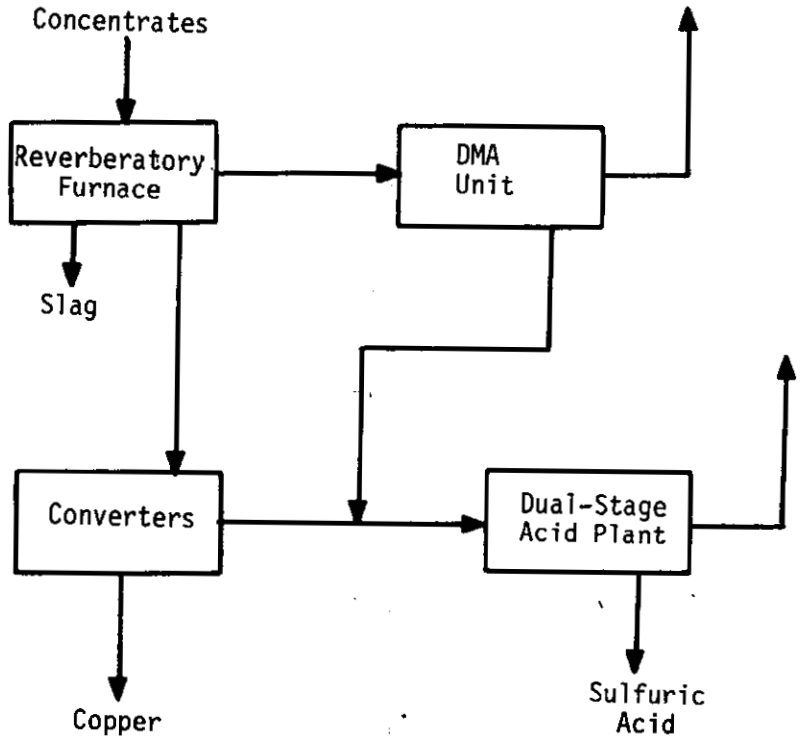

TABLE 6-12 CONTROL COSTS FOR MODEL COPPER SMELTING FACILITIES

Model No.	Control Equipment	Capital Cost ($MM)	Capital Charges ($MM/yr)	Operating Cost ($MM/yr)	Total Cost ($MM/yr)	Overall Control (%)	Control Costs Cents/lb Copper	Control Costs Cents/lb SO_2	Incremental Control Costs Δ Cents/lb Copper	Incremental Control Costs Δ Cents/Δ lb SO_2
	Electric Smelting									
Ia	Single Stage Acid Plant	10.2	2.31	0.57	2.88	97.5(1)	1.68(2)	0.72(2)	—	—
	Neutralization	5.4	0.96	0.97	1.93					
		15.6	3.27	1.54	4.81	97.5(1)	2.79	1.21	—	—
Ib	Dual Stage Acid Plant	11.4	2.59	0.62	3.21	99.5(1)	1.87(2)	0.79(2)	0.19(3)	4.34(3)
	Neutralization	5.5	1.00	0.99	1.99					
		16.9	3.59	1.61	5.20	99.5(1)	3.03	1.28	0.24(3)	5.13(3)
Ic	DMA Scrubbing	25.8	5.84	0.96	6.80					
	Sulfur Plant	3.5	0.76	0.73	1.49					
		29.3	6.60	1.69	8.29	99.5(1)	4.82(4)	2.04(4)	—	—
Id	DMA Scrubbing	23.4	5.30	0.86	6.16	99.5(1)	3.58(5)	1.52(5)	—	—
	Flash Smelting									
IIa	Single Stage Acid Plant	8.7	1.98	0.50	2.48	97.5(1)	1.45(2)	0.62(2)	—	—
	Neutralization	5.4	0.96	0.97	1.93					
		14.1	2.94	1.47	4.41	97.5(1)	2.56	1.10	—	—
IIb	Dual Stage Acid Plant	9.8	2.23	0.54	2.77	99.5(1)	1.61(2)	0.68(2)	0.16(3)	4.15(3)
	Neutralization	5.5	1.00	0.99	1.99					
		15.3	3.23	1.53	4.76	99.5(1)	2.77	1.17	0.21(3)	5.01(3)
IIc	DMA Scrubbing	20.2	4.57	0.73	5.30					
	Sulfur Plant	3.5	0.76	0.73	1.49					
		23.7	5.33	1.46	6.79	99.5(1)	3.95(4)	1.67(4)	—	—
Id	DMA Scrubbing	18.1	4.08	0.63	4.71	99.5(1)	2.74(5)	1.16(5)	—	—

TABLE 6-12 (Con't) CONTROL COSTS FOR MODEL COPPER SMELTING FACILITIES

Model No.	Control Equipment	Capital Cost ($MM)	Capital Charges ($MM/yr)	Operating Cost ($MM/yr)	Total Cost ($MM/yr)	Overall Control (%)	Control Costs Cents/lb Copper	Control Costs Cents/lb SO_2	Incremental Control Costs Δ Cents/lb Copper	Incremental Control Costs Δ Cents/Δ lb SO_2
	Roaster/Reverberatory Smelting									
IIIa	Single Stage Acid Plant	8.7	1.98	0.44	2.42	78.5 (1)	1.41 (2)	0.75 (2)	—	—
	Neutralization	4.8	0.87	0.78	1.65					
		13.5	2.85	1.22	4.07	78.5 (1)	2.41	1.27	—	—
IIIb	Dual Stage Acid Plant	9.7	2.21	0.48	2.69	80.0 (1)	1.57 (2)	0.82 (2)	0.82 (2)	4.84 (3)
	Neutralization	4.8	0.87	0.79	1.66					
		14.5	3.08	1.27	4.35	80.0 (1)	2.56	1.33	0.15 (3)	5.01 (3)
IIIc	DMA Scrubbing	11.2	2.54	0.43	2.97					
	Dual Stage Acid Plant	10.2	2.31	0.52	2.83	98.5 (1)	3.37 (2)	1.43 (2)	1.80 (6)	4.05 (6)
	Neutralization	5.5	1.00	0.99	1.99					
		26.9	5.85	1.94	7.79	98.5 (1)	4.53	1.93	1.97 (6)	4.43 (6)
	Reverberatory Smelting									
IVa	Single Stage Acid Plant	8.9	2.02	0.46	2.48	69.0 (1)	1.45 (2)	0.89 (2)	—	—
	Neutralization	4.4	0.80	0.68	1.48					
		13.3	2.82	1.14	3.96	69.0 (1)	2.30	1.41	—	—
IVb	Dual Stage Acid Plant	9.9	2.25	0.50	2.75	70.0 (1)	1.60 (2)	0.96 (2)	0.15 (3)	5.48 (3)
	Neutralization	4.4	0.80	0.69	1.49					
		14.3	3.05	1.19	4.24	70.0 (1)	2.46	1.49	0.16 (3)	5.69 (3)
IVc	DMA Scrubbing	17.0	3.85	0.84	4.69					
	Dual Stage Acid Plan	10.1	2.23	0.56	2.79	98.5 (1)	4.36	1.85	2.76 (6)	3.99 (6)
	Neutralization	5.4	0.96	0.98	1.94					
		32.5	7.04	2.38	9.42	98.5 (1)	5.48	2.33	3.02 (6)	4.36 (6)

Footnotes for Table 6-12:

(1) Overall control efficiencies calculated assuming no fugitive emissions, no down-time of control equipment and tail gases from single-stage acid plants containing 2000 ppm SO_2, from dual-stage acid plants containing 500 ppm SO_2, and from DMA scrubbing systems containing 500 ppm SO_2. EPA survey of existing copper smelters identified fugitive emissions varying between 0% and 15% of total SO_2 emissions vented to atmosphere.

(2) Acid sold at zero netback to smelter.

(3) Incremental control costs reflecting use of dual-stage plant over single-stage acid plant.

(4) Sulfur sold at zero netback to smelter.

(5) Liquid SO_2 sold at zero netback to smelter.

(6) Incremental control costs reflecting use of DMA scrubbing on reverberatory furnace off-gases over venting furnace off-gases directly to atmosphere.

The derivation of the capital-related charges is based on the following assumptions: (1) depreciation of 15 years (25 years for neutralization facility) for all equipment, (2) interest, insurance, and taxes at 10 percent of total invested capital, and (3) maintenance costs, estimated as a percentage of total invested capital (see Table 6-11 for actual percentages). Operating costs are the direct operating expenditures for payroll costs and utilities. The unit costs are based on production of 86,000 tons of copper per annum.

For all control alternatives, each smelter consists of one furnace to smelt 1000 tons per day of concentrate and 3 Pierce-Smith converters. Wet cleaning units consisting of scrubbers, mist precipitators, etc., are mandatory for treating all smelter source emissions. Metallurgical acid plants sold as turnkey units incorporate this feature. Therefore, wet cleaning requirements for acid plants are included in acid plant costs wherever such a plant is sized and costed. A brief discussion of each control alternative follows.

Case Ia - Off-gases from the electric furnace at 6% sulfur dioxide are combined with off-gases from the copper converters at 7 to 10-1/2% sulfur dioxide, forming the feed to a single-stage sulfuric acid plant and ranging in concentration from 6 to 8-1/2% sulfur dioxide. The off-gas flow rate from the electric furnace is 24,000 SCFM, while that from the converters ranges from 31,000-63,000 SCFM. Thus, the acid plant is sized to process peak off-gas flowrates of 87,000 SCFM, to produce 927 TPD of 100% sulfuric acid.

Case Ib - Essentially the same as Case Ia except this alternative incorporates a dual-stage sulfuric acid plant rather than a single-stage plant, resulting in the production of 944 TPD of 100% sulfuric acid.

Case Ic - Off-gases from the electric furnace are combined with off-gases from the copper converters, forming the feed to a DMA scrubbing unit. The DMA unit produces a concentrated sulfur dioxide gas ($\sim$ 100%) which is processed by a sulfur plant. The off-gases from the sulfur plant containing 5-1/2% sulfur dioxide are recycled to the DMA unit for treatment with the combined electric furnace and converter

off-gases. Due to the recycle of the sulfur plant tail gases, the DMA unit is sized to process peak off-gas flowrates of 101,000 SCFM. The sulfur plant is sized to process peak sulfur dioxide flowrates of 7700 SCFM, to produce 308 TPD of elemental sulfur.

Case Id - Off-gases from the electric furnace are combined with off-gases from the copper converters, forming the feed to a DMA unit. The DMA unit produces liquefied sulfur dioxide. In this case, the DMA unit is sized to process peak off-gas flowrates of 87,000 SCFM.

Case IIa - Off-gases from the flash furnace at 10% sulfur dioxide are combined with off-gases from the copper converters at 7 to 10-1/2% sulfur dioxide, forming the feed to a single-stage acid plant and ranging from 7-8% sulfur dioxide. The off-gas flowrate from the flash furnace is 28,000 SCFM, while that from the copper converters ranges from 16,000-32,500 SCFM. Thus, the acid plant is sized to process peak off-gas flowrates of 73,000 SCFM. Due to the high sulfur dioxide concentrations, air is blended with the feed to the acid plant to provide sufficient oxygen to convert sulfur dioxide to sulfur trioxide. The acid plant produces 929 TPD of 100% sulfuric acid.

Case IIb - Essentially the same as Case IIa except this alternative incorporates a dual-stage acid plant rather than a single-stage plant, resulting in the production of 945 TPD of 100% sulfuric acid.

Case IIc - Off-gases from the flash furnace are combined with off-gases from the copper converters, forming the feed to a DMA scrubbing unit. The DMA unit produces a concentrated sulfur dioxide gas (∿ 100%) which is processed by a sulfur plant. The off-gases from the sulfur plant containing 5-1/2% sulfur dioxide are recycled to the DMA unit for treatment with the combined flash furnace and converter off-gases. Due to the recycle of the sulfur plant tail-gases, the DMA unit is sized to process peak off-gas flowrates of 72,000 SCFM. The sulfur plant is sized to process peak sulfur dioxide flowrates of 6300 SCFM, to produce 309 TPD of elemental sulfur.

Case IId - Off-gases from the flash furnace are combined with off-gases from the copper converters, forming the feed to a DMA unit. The DMA unit produces liquefied sulfur dioxide. In this case, the DMA unit is sized to process peak off-gas flowrates of 60,500 SCFM.

Case IIIa - Off-gases from a fluid-bed roaster at 10% sulfur dioxide are combined with off-gases from the copper converters at 7 to 10-1/2% sulfur dioxide, forming the feed to a single-stage acid plant and ranging from 7-8% sulfur dioxide. Off-gases from the reverberatory smelting furnace at 2-1/4% are vented directly to the atmosphere. The off-gas flowrate from the roaster is 17,000 SCFM, that from the reverberatory furnace 41,900 SCFM, while that from the copper converters ranges from 18,500-37,700 SCFM. Thus, the acid plant is sized to process peak off-gas flowrates of 63,000 SCFM. Due to the high sulfur dioxide concentrations, air is blended with the feed to the acid plant to provide sufficient oxygen to convert sulfur dioxide to sulfur trioxide. The acid plant produces 748 TPD of 100% sulfuric acid.

Case IIIb - Essentially the same as Case IIIa except this alternative incorporates a dual-stage acid plant rather than a single-stage acid plant, resulting in the production of 760 TPD of 100% sulfuric acid.

Case IIIc - Off-gases from the fluid-bed roaster are combined with the off-gases from the copper converters, forming the feed to a dual-stage acid plant. The off-gases from the reverberatory smelting furnace are fed to a DMA scrubbing unit. The DMA unit produces a concentrated sulfur dioxide gas ($\sim$ 100%) which is also fed to the dual-stage acid plant in addition to the roaster and converter off-gases. The DMA unit is sized to process 41,900 SCFM of off-gases and the acid plant is sized to process peak off-gas flowrates of 69,500 SCFM. The acid plant produces 946 TPD of 100% sulfuric acid.

Case IVa - The off-gases from the reverberatory smelting furnace at 1-3/4% sulfur dioxide are vented directly to the atmosphere. The off-gases from the copper converters at 7 to 10-1/2% sulfur dioxide form the feed to a single-stage sulfuric acid plant. The off-gas flowrate from the reverberatory furnace is 82,500 SCFM, while that from the copper converters ranges from 31,000-63,000 SCFM. Thus the acid plant is sized to process peak off-gas flowrates of 65,500 SCFM. Due to the high concentration of sulfur dioxide, air is blended with the feed to the acid plant to provide sufficient oxygen to convert sulfur dioxide to sulfur trioxide. The acid plant produces 651 TPD of 100% sulfuric acid.

Case IVb - Essentially the same as Case IVa except this alternative incorporates a dual-stage acid plant rather than a single-stage acid plant, resulting in the production of 660 TPD of 100% sulfuric acid.

Case IVc - The off-gases from the reverberatory smelting furnace form the feed to a DMA scrubbing unit. The DMA unit produces a concentrated sulfur dioxide gas (∿ 100%), which is combined with the off-gases from the copper converters and fed to a dual-stage acid plant. The DMA unit is sized to process 82,500 SCFM, while the acid plant is sized to process peak off-gas flowrates of 75,500 SCFM. The acid plant produces 937 TPD of 100% sulfuric acid.

6.1.3 Economic Impact of the New Source Performance Standard

Summary--

The economic impact of the National Ambient Air Quality Standards (NAAQS) will be to increase production costs on the average of about 3 cents per pound of copper for the industry. Increased costs will reduce profits at all mines, forcing marginal mines to close. This will restrict output and create pressures for price increases. However, price increases will depend ultimately on the elasticity of demand on the part of the consumer.

The major economic impact of the proposed New Source Performance Standard (NSPS) will be on potential new smelters located in areas in which no state new source standard analogous to the proposed NSPS exists and in which the nature of the Air Quality Control Region (AQCR) is such that 70-80% or less of potential sulfur dioxide emissions need to be controlled to comply with the NAAQS. In these locations, the cost of emission control for new reverberatory smelters ranges from 3-5 cents per pound of copper, while that for new electric or flash smelters ranges from 1.5-3 cents per pound of copper. The average cost of emission control, however, currently being experienced within the domestic industry is about 3 cents per pound of copper. Thus, the proposed NSPS will effectively preclude the construction of new conventional smelters utilizing reverberatory smelting technology in favor of the construction of new smelters utilizing electric smelting or flash smelting technology, which are competitive with the domestic industry in terms of emission control costs.

In those areas in which a state new source standard analogous to the proposed NSPS exists (Arizona, Montana, New Mexico, Nevada, Tennessee, and Washington), or in which the nature of the AQCR is such that a new smelter would have to control 70-80% or more of the potential sulfur dioxide emissions to comply with the NAAQS, the impact of the proposed NSPS beyond that of the NAAQS is minimal. In these cases, the incremental economic impact of the proposed NSPS is likely to be due to the requirement to install double-absorption acid plants (or equivalent technology), rather than single-absorption acid plants. The incremental economic impact of this requirement is estimated to be about 0.2 cent per pound of copper.

The economic impact of Federal regulations, recently promulgated or currently under development as a result of the Occupational Safety and Health Act (OSHA) and the Water Pollution Control Act, appears negligible in comparison with the impact associated with the NAAQS or the proposed NSPS. Although a general lack of quantitative data exists concerning the economic impact of OSHA, indications are that additional expenditures over and above those normally incurred by the industry are likely to be small. The costs of water pollution abatement, based on settling of suspended solids to remove heavy metal hydroxides and subsequent liming to neutralize process water, have been estimated at 0.3 cent per pound of copper by Arthur D. Little.

The promulgation of the proposed NSPS is not likely to further impair our balance of trade. Foreign imports of copper face a barrier of about 1-3 cents per pound. This barrier results from the present tariff on copper imports of about 1 cent per pound and associated shipping costs of up to 2 cents per pound. Since new

smelters can be built which will incur emission control costs in the range of 1.5-3 cents per pound of copper, new smelters in the United States will remain competitive with foreign smelters in Africa, Australia or similar locations.

General Discussion--

Smelters affected by the New Source Performance Standards (NSPS) will be competing in a domestic industry which is currently incurring higher smelting costs as a result of complying with the National Ambient Air Quality Standards (NAAQS). Compliance with other Federal regulations, which have recently been promulgated or are currently under development as a result of the Occupational Safety and Health Act (OSHA) and the Water Pollution Control Act, for example, will also contribute to higher smelting costs for the domestic industry. Furthermore, the domestic industry will be competing with smelters located in various foreign countries operating under less stringent regulations. Consequently, before examining the economic impact of the proposed NSPS, it is pertinent to briefly review the economic impact of NAAQS, OSHA, Water Pollution Control Act and the effect of foreign competition on the domestic industry.

A study by A.D. Little for EPA [17] and a review of data in EPA files indicates that existing copper smelters in the United States will experience an increase in production costs ranging from about 1-1/2 to 5 cents per pound of copper to meet the sulfur dioxide NAAQS. A comparison of ADL's capital estimates and anticipated corporate expenditures for pollution control costs necessary to meet State Implementation Plans as of mid-1972 is presented in Table 6-13. Generally, the

TABLE 6-13 SUMMARY OF SMELTER CONTROL COSTS ALLOCATED OR ANTICIPATED

Company	Smelter	ADL Capital Estimate(1) (Millions of Dollars)	Corporate Expenditures(2) (Millions of Dollars)	Annual Cost (Millions of Dollars)		Total Annualized Cost	Abatement Cost (Cent per lb Cu)		Capacity, Annual Tonnage (1975 Basis)
				O+M(9)	Capital(10)		Smelter	Company	
PD	Ajo	27	27	1.6	4.5	6.1	5.1	3.3	60,000
PD	Douglas	13	4.5(3)	0.4	0.75	1.1	0.5(3)	3.3	110,000
PD	Morenci	82	85(4)	2.7	14.2	16.9	4.2	3.3	200,000
A	Montana	45	37(5)	3.2	6.2	9.4	3.4	3.4	140,000
NMC	San Manuel	36	36	3.9	6.0	9.9	3.3	3.3	150,000
ICC	Inspiration	30	51(6)	2.7	8.5	11.2	4.0	4.0	140,000
KCC	Hayden	15	9(7)	1.2	1.5	2.7	1.8	2.2	75,000
KCC	Hurley	23	23	1.9	3.8	5.7	3.6	2.2	80,000
KCC	McGill	24	23	1.6	3.8	5.4	3.4	2.2	80,000
KCC	Utah	45	35(8)	2.2	5.8	8.0	1.6	2.2	255,000
ASARCO	El Paso	20	19	2.4	3.2	5.6	2.3	2.1	120,000
ASARCO	Hayden	17	23	2.3	3.8	6.1	2.2	2.1	140,000
ASARCO	Tacoma	16	16	0.9	2.7	3.6	1.6	2.1	110,000

(1) ADL; "Economic Impact of Anticipated Pollution Abatement Costs: Primary copper Industry;" Report to EPA; 1972.

(2) Data from EPA files covering correspondance, trip reports and meetings with various companies.

(3) Based on particulate control only.

(4) Based on ruling request of IRS on proposed Greenlee County, Arizona, bond proposal by Phelps Dodge.

(5) Does not include hydrometallurgical plant.

(6) Based on construction of new electric furnace smelter.

(7) Does not include allowances for improved particulate control of reverberatory furnace or the installation of slag treatment facilities.

(8) Based on Salt Lake County Industrial Authority bond issue proposal.

(9) ADL estimates.

(10) Capital costs based on projected corporate expenditures. (Depreciation - 15 yrs.; Interest - 8%; Taxes and insurance - 2%.)

capital requirements planned by corporate managements are in close agreement with the ADL estimates. Based on the data in this table, the industry-wide average for smelting pollution control costs is about 2.8 cents per pound of copper. This estimate added to the smelting and refining costs of about 10 cents per pound is the production cost (12.8 cents) within the domestic primary copper industry.

Income statements representing the various types of firms operating within the domestic smelting industry are presented in Table 6-14. This table illustrates the financial impact on existing smelters as a result of compliance with NAAQS. The most significant impact is on the custom smelter/refiner operator. Control costs exceed both profits after tax and cash flow. As a result, the custom smelter/refiner will have to raise his smelting charges (the difference between value of smelter output and cost of concentrates) by the corresponding amount of the abatement costs to stay in business over the long term, assuming operating savings are unavailable.

Table 6-14 also illustrates the impact of NAAQS on a mining firm assuming a full pass-back of the 2.8 cent abatement cost. Under these conditions, the high-cost mine suffers a 35 percent loss in its operating profit compared to a 13 percent loss for the low-cost mine. The high depreciation charge for the high-cost mine softens the impact of a pass-back on its cash flow. Over the short term, the high-cost mine would probably stay in business, accepting a cut in its sales price. However, over the long term, the high-cost mine would likely discontinue operations under this condition.

TABLE 6-14 MODEL INCOME STATEMENT FOR INTEGRATED PRODUCERS, INDEPENDENT MINES, AND CUSTOM SMELTERS (ALL REVENUES AND EXPENSES IN CENTS PER POUND OF COPPER METAL)

Item	Cents/lb Copper				
	High-Cost Mine	Low-Cost Mine	Custom Smelter/ Refiner	High-Cost Integrated Producer	Low-Cost Integrated Producer
Sales(1)	42.0	42.0	52.0	52.0	52.0
Cost of Goods Sold, excluding depreciation	24.7	14.6	47.2	29.9	19.8
Depreciation	8.3	4.9	1.5	9.8	6.4
Selling, General, and Administrative	1.0	1.0	1.5	2.5	2.5
Operating Profit	8.0	21.5	1.8	9.8	23.3
Depletion(2)	4.0	6.0	--	4.9	6.0
Taxes(3)	2.0	7.7	0.9	2.4	8.6
N.E.A.T.(4)	2.0	7.8	0.9	2.5	8.7
Cash Flow	14.3	18.7	2.4	17.2	21.1
Industry Wide Control Cost	2.8	2.8	2.8	2.8	2.8
Control Cost,					
% of Operating Profit, (Before Control)	35	13	156	29	12
% of Cash Flow (Before Control)	20	15	117	16	13

NOTE: References on following page.

(1) Sales price of refined product @ 52¢ represents 1971 conditions, which were a low point in profitability for the industry.

(2) Depletion cost is based on 15 percent of F.O.B. mine value, not to exceed 50% of operating profit (before tax and depletion deductions).

(3) Tax rate of 50% assumed for each unit step mining, smelting, etc.

(4) Net earnings after taxes.

SOURCES: A. D. Little (unpublished information) and Moody's.

The economic impact of NAAQS on the integrated high-cost producer is approximately as severe in terms of cash flow losses as for the high-cost independent mine. In each case, the cash flow loss is 2.1 cents as shown below after absorbing the cost penalty:

	High-Cost Mine (costs, cents per lb)	High-Cost Integrated Firm (costs, cents per lb)
Operating Profit	8.0	9.8
Less Control Costs	2.8	2.8
Depletion	2.6	3.5
Taxes	1.3	1.7
Net Earnings After Taxes	1.3	1.8
Cash Flow Loss	2.1	2.1

It should be noted, however, that the financial capability to raise money for continuation of operations of the integrated firm versus that of the independent (and more likely, smaller) firm depends upon factors besides profitability of specific operations. Important to the integrated producer and to the suppliers of financial capital is extent of diversification into areas unrelated to abatement-affected operations, such as fabricating, scrap reclaiming, production of other metals, etc. Diversification may soften the impact on the profitability and credit rating of the overall company. However, the impact in terms of cash flow on the particular production line remains the same as that for the independent high-cost mine.

The impacts on the low-cost mine and the integrated producer are the least severe. The low-cost mine probably would be willing to accept a decrease in the price offered for its concentrates over the long run. Ultimately, the low-cost mine would expect to

benefit by any price increase in terms of profitability. The only options available to the low-cost mine, other than accept a lower price from the custom smelter, would be to ship concentrates to another smelter (possibly outside the U.S.) or engage in joint ventures with other similar producers to explore alternative methods of smelting arrangements. This latter course appears likely in the wake of the recent Cyprus Mines-Bagdad merger.

The low-cost integrated producer suffers the least severe impact. Although both the low-cost integrated producer and the low-cost independent mine have to absorb 2.8 cents, the profitability at the mine could carry them over to better times (increased revenues and profits).

In conclusion, the smelting/refining segment of the industry will be faced with increased production costs that will have to be passed on to the mine and/or consumer. The implications of the current balance between mining capacity and smelting capacity, 1975 basis (Table 6-6), are that absorption of a portion of emission control costs will have to be shared by the mines. This may result in closing some marginal mines and delay new mine development.

A limitation in smelting capacity, or "bottleneck" as it is referred to by analysts, is believed to extend world-wide.[18] This restriction in primary copper output, along with increased costs of pollution control, will put upward pressure on prices to the consumer. Increased scrap recovery, processing of leachable low-grade ores, and imports of blister and refined copper will supply raw material for the

refiner and fabricator to meet any increased demand in the short to intermediate term. Thus, exploitation of secondary sources will postpone mine expansion and subsequently delay construction of new smelters in the U.S.

Estimating the economic impact of OSHA is extremely difficult. Contacts with both the Bureau of Mines and the Department of Labor reveal that little data relating to the additional expenditures anticipated by the domestic industry to comply with OSHA regulations is available. Furthermore, contacts directly with the domestic industry reveal a general lack of quantitative data. Consequently, at this point a full assessment of the economic impact of OSHA on the domestic industry is not possible. In general, however, qualitative information provided by these contacts indicates limited economic impact due to OSHA, since additional expenditures over and above those normally incurred by the domestic industry are likely to be small.

In an Arthur D. Little (ADL) report to EPA,[17] ADL estimated the costs of water pollution abatement based on settling of suspended solids to remove heavy metal hydroxides and subsequent liming to neutralize process water. The estimated magnitude of investment required for eight copper-producing companies is $30 million. Direct operating costs are $5 million per year; additional charges for amortization, debt service, maintenance, taxes, and insurance are $6 million. Total annualized costs are estimated at $11 million per year, or roughly 0.3 cent per pound of copper. This seems insignificant when compared to the industry-wide average cost of 3 cents per pound associated with air pollution abatement as a result of compliance with the NAAQS.

The ADL report indicates that most mines, beneficiation plants, and smelters are located in arid areas where water reclamation is of utmost importance to production of nonferrous metals. At these locations, water treatment and re-use is a necessary practice. In areas where water resources are abundant, particularly in the eastern United States where copper refineries are located, water usage is of minor concern, with resultant minor emphasis on water treatment. Hence, the projected expenditures basically represent requirements of water pollution abatement for copper refineries

It should be noted, however, that the ADL report qualifies the estimated water pollution control costs somewhat. These costs are based on water treatment technology of the same level practiced in industry's exemplary facilities. This level of technology may not be sufficient to comply with Federal and State agency guidelines in the more strict situations. If the eventual water standards require lower levels of heavy metals values that are not achievable by precipitation methods of treatment as employed in ADL's analysis, then the cost estimates may be seriously understated.

The one discernible advantage of the domestic industry over foreign producers is the 0.8 cent per pound tariff presently charged on foreign imports of copper metal into the U.S.[19] Transportation charges for importing copper from foreign smelters may cost up to 2 cents per pound. Thus, in terms of competition between the domestic industry and foreign producers, the barrier against the foreign producer is from 0.8 to 2.8 cents per pound of copper.

The transportation costs between a South African smelter and the New York market would probably be comparable to shipping costs between an Arizona smelter and the same market. Smelters located in eastern Canada or northern Mexico would probably find similar costs for shipping to New York. Since these foreign locations currently appear to have air pollution regulations less stringent than the NAAQS's (other production cost factors assumed equal), there exists an incentive to select sites other than the Southwest United States for a new smelter, unless control costs to meet the NAAQS could be maintained at the lower end of the 0.8-to-2.8-cent range. For the Pacific coast (California) markets, an Arizona smelter would find similar competition from western Canada or Australia.

As discussed above, prospective new U.S. smelters will be competing in an industry currently experiencing increased production costs of about 3 cents per pound of copper as a result of complying with NAAQS's. Increased production costs associated with OSHA and water pollution abatement regulations appear small in comparison and, for purposes of analyzing the economic impact of the proposed NSPS, can be neglected. Domestic importers of copper face a barrier of about 1 to 3 cents per pound of copper. In this situation, it appears that the emergence of new or modified smelters within the domestic industry will be limited to installations for which pollution control costs do not exceed 3 cents per pound of copper. It is in this general framework that the impact of the proposed NSPS will be examined.

The economic impact of the proposed NSPS relative to that of the NAAQS is extremely difficult to assess for a new or modified smelter. The degree of emission control necessary and the pollution control costs associated with a copper smelter in order to comply with the NAAQS depends on a number of factors. Smelter processing capacity, stack height, type of terrain, prevailing meteorological conditions and type of smelting operation are of major importance. Consequently, a complete assessment of the economic impact of the proposed NSPS compared to that of the NAAQS would require an evaluation of each Air Quality Control Region (AQCR) to determine both the degree of emission control and the associated pollution control costs necessary to comply with the NAAQS. Such an analysis is outside the scope of this report.

Furthermore, at this point in time, a study of this nature would be of questionable value since EPA is evaluating the use of supplementary control strategies (SCS) to meet the NAAQS. If such strategies are determined to be both effective and acceptable, the economic impact of NAAQS could be reduced substantially, in some cases, according to various industry sources.

One aspect of the relative impact of the proposed NSPS to the NAAQS concerns the area of smelting technology. Currently within the domestic industry, reverberatory smelting is the predominant technology utilized to produce copper. Of the fifteen smelting installations, fourteen currently practice reverberatory smelting and one practices electric smelting. However, one smelter is in the midst of changing from reverberatory smelting to electric smelting, and the new smelter announced for Tyrone, N. M., by Phelps Dodge will utilize flash smelting.

Some State Implementation Plans to meet the NAAQS (Arizona, Montana, New Mexico, Nevada, Tennessee and Washington) include State new source standards analogous to the proposed NSPS. However, the States of Arizona and New Mexico appear to be the most likely location for new domestic copper smelters due to the rapid development of new mining capacity in these states. In these States, the State new source standard requires that any new smelter must capture 90% of the smelter input sulfur. This degree of control can be achieved in pyrometallurgical processes only by controlling both copper converters and the smelting furnace.

The only model smelters of Table 6-12 which meet a 90 percent control standard and incur control costs of not more than approximately 3 cents per pound are:

Case	Process	Control	Acid or Liquid SO_2 Break-Even[3]	Acid Neutralization
Ia	Electric furnace smelting	SA[1] acid plant	1.68	2.79
Ib	Electric furnace smelting	DA[2] acid plant	1.87	3.03
IIa	Flash furnace smelting	SA[1] acid plant	1.45	2.56
IIb	Flash furnace smelting	DA[2] acid plant	1.61	2.77
IId	Flash furnace smelting	DMA scrubbing	2.74	--

Notes:

1. Single-absorption
2. Double-absorption
3. Sale price equals shipping costs

These costs do not incorporate savings in operating efficiencies for flash furnaces versus reverberatory smelting furnaces. Table 6-12 also shows that the two conventional model smelters (Cases III and IV) that would meet a 90 percent control standard have control costs, even when selling sulfuric acid at break-even, that exceeds 3 cents per pound of copper. This indicates that in few, if any, cases would it be economically viable to construct a new conventional smelter to comply with State NSPS.

Table 6-12 indicates that new flash or electric smelters producing sulfuric acid or liquid SO_2 have control costs of less than 3 cents per pound of copper, including the costs of neutralizing the acid to produce a solid material. Any production savings (0.5 to 1.3 cents per pound copper as presented earlier) for flash smelting and lower abatement costs to achieve 90 percent control effectiveness would enhance the prospects for a flash furnace smelter over a conventional smelter. In those few situations in which the flash smelting process is not applicable, as discussed in Section 3.1.1.2, the electric smelting process is an alternative. Again, a control cost of less than 3 cents per pound of copper can be achieved, including the costs of neutralizing sulfuric acid.

It should be noted that the proposed NSPS will have an economic impact slightly greater than the State NSPS cited above. The proposed NSPS is essentially based upon control by double-absorption sulfuric acid plants, or an equivalent degree of control, which results in a control efficiency (an increased cost) in excess of the State 90 percent NSPS.

However, the penalty for double-absorption acid plants ranges from 0.16 cents to 0.24 cents per pound copper and incremental costs of this order of magnitude should not create any problems for new smelters.

In those states which have not included State NSPS's analogous to the proposed NSPS, the impact on smelting technology of the NAAQS varies from AQCR to AQCR depending on many factors as mentioned earlier. In those AQCR's which, due to the nature of the AQCR, require a smelter to control from 70-80% or more of the potential sulfur dioxide emissions to comply with the NAAQS, the impact of the NAAQS on smelting technology is the same as that of the proposed NSPS. However, in those AQCR's which require a smelter to control less than 70-80% of the potential sulfur dioxide emissions, the impact of the proposed NSPS on smelting technology is more severe than that of the NAAQS. In these cases, the NAAQS would permit the construction of a new conventional smelter based on reverberatory smelting technology with a pollution control cost penalty of less than 3 cents per pound of copper, as shown in Table 6-12.

The conclusion is that the new source performance standard in all likelihood will economically prohibit the construction of new conventional smelters, although this is likely to be the impact of the NAAQS for some cases also. Whether this causes any technological problems is being investigated in a separate study under EPA contract with Arthur D. Little, Inc. (refer to Section 7), which is further investigating the matter of processing dirty feedstocks in flash and electric furnaces.

Exports of copper are expected to continue to decline in the United States. As shown in Table 6-4, domestic exports of refined copper have been declining steadily since 1962. This discussion is then directed to the subject of imports.

During 1971 and 1972, foreign prices, as measured by the LME quotations, were approximately 2-3 cents below the U.S. producers' price. If a spread of 3 cents or more between the two quotations is sustained for any length of time, an increase in copper imports could be expected to occur. The distance between the source of imports and the domestic market (Pacific or Atlantic coast) in terms of ocean freight costs (0-2 cents) plus tariff (0.8 cents) would be comparable to the LME-U.S. producer quotation difference. This effectively precludes any increase in prices by U.S. producers without a corresponding increase in foreign price and/or imports.

Short-term differentials between U.S. producer and the London market quotations do not necessarily provide a notable increase in copper imports. For example, during the recessionary 1971, foreign imports increased by only 30,000 tons over 1970 in spite of the undercutting of U.S. prices by foreign quotations, at times by as much as 3 cents per pound of copper. One explanation for this behavior is the political and economic instability of many copper-producing countries such as Chile, Peru, Zambia, and Zaire. Historically, disturbances in these countries have often catapulated foreign prices upward to the extent that favorable import price differentials have been quickly erased.

The effect of the unilateral devaluation of the dollar against gold and its subsequent realignment against foreign currencies was intended to correct the imbalance in U.S. foreign trade (i.e., imports exceeding exports). Two devaluations announced by President Nixon in August 1971 and in February 1973 should benefit domestic producers over

the short to intermediate term by pricing foreign imports at a higher level. (A 10 percent dollar devaluation would increase foreign copper price from 48 cents to approximately 53 cents while a domestic price of 50 to 51 cents would remain unchanged.) However, the long-term effects of devaluation on the American economy and the copper industry, in particular, appear negative. Increasing prices of imports essential to the United States may ultimately lead to reduced U.S. purchasing power, which affects such sectors of the economy as luxury goods, durable goods (automobiles and household appliances), and residential construction, all consumers of copper goods. Overall, the implications of devaluation for the copper industry are unclear.

The foregoing discussion has been directed toward the impact of the proposed standard upon new grass-roots smelters. Growth in the copper industry has historically been accomplished by incremental expansion at existing smelters, as well as by the addition of new smelters. During the course of the background study in the development of the proposed standard, it was recognized that the question of the impact of the new source performance standard upon modifications of existing smelters would require consideration.

EPA's analysis indicates that controlling reverberatory furnace gases by scrubbing would be economically prohibitive. Therefore, any modification approach that would include the reverberatory furnace as an affected facility appears to be restrictive on the future growth

of the industry. Existing green charge smelters could change to calcine charging by adding a fluid-bed roaster with an acid plant to control the latter's strong sulfur-laden streams. This would allow significant expansion for this type of operation. However, existing smelters that calcine concentrates could possibly be restricted from expansion, particularly if this type of smelter has gone as far as it can in controlling SO_2 emissions from all strong streams. An exemption from the standard of certain modifications to the reverberatory furnace, provided that emissions from the total smelter do not increase, should allow additional flexibility for expansion. The recommended approach to modification includes this exemption for the reverberatory furnace as long as the resultant changes will not increase the overall smelter emissions. Individual roasters and converters will be designated as affected facilities, subject to the limitation of 650 ppm SO_2 in their off-gases.

Arthur D. Little, Inc. is carrying out a contract study for EPA which will determine the economic impact of alternative interpretations of modifications under section 111 of the Act. ADL is investigating in more detail the effects that EPA's recommended approach on modifications might have on individual companies. Individual smelters will be evaluated on the basis of SIP requirements, present calcining practices, and present acid production capabilities (capacity rating for producing acid, as well as the percentage of SO_2 conversion to sulfuric acid). ADL will estimate capital and annualized costs

for smelting concentrates, including costs for control of emissions in compliance with the assumed interpretations of modifications. Control of emissions will be assumed to be consistent with the requirements for achieving the NAAQS. Some five options of interpreting modifications will be considered, ranging in scope from the most lenient interpretation of specifying the entire smelter as the affected facility, thereby giving the smelter the freedom of upgrading emission control for each added expansion (without increasing overall smelter emissions), to the most strict interpretation of designating each modified facility subject to the proposed new source standard of 650 ppm.

Representative expansions investigated will include adding a converter to a smelter, changing reverberatory furnace firing conditions by switching to preheated or oxygen-enriched air, widening reverberatory furnace walls, and switching from green charge smelting to calcine smelting via addition of a fluid-bed roaster.

Production costs for each type of modification on a model smelter will be compared with: (1) the costs of exporting concentrates to a foreign toll smelter and return of copper values in the form of blister, and (2) the costs of a new grass roots smelter. Each modification where production costs significantly exceed production costs via a foreign smelter or new smelter will be considered definitely unattractive. Each modification where production costs approximate production costs via foreign smelting will be rated an uncertain alternative to expansion.

In summary, new copper smelters can be constructed to comply with the proposed standard without incurring undue economic hardship. In addition, some existing smelters will be able to expand and comply with the standard without incurring unreasonable costs. EPA recognizes that certain smelters may refrain from expansion because they view the added cost as being uneconomical; nevertheless, in EPA's judgment the proposed standard will not unduly restrict growth in the smelting industry.

REFERENCES FOR SECTION 6.1

1. Fisher, Franklin M. and Cootner, Paul M., "An Econometric Model of the World Copper Industry," M.I.T., Department of Economics Working Paper, April 1971.

2. Private communication with Lummus International, August 1972.

3. Private communication with David Buckwalter, Magma Copper Company, November 1972.

4. Private communication with Howard Winn, Kennecott Copper Company, November 1972.

5. Private communication with R. R. Hyde, Inspiration Consolidated Copper Company, September 1972.

6. Foard, J.E., and Beck, R.R., "Copper Smelting, Current Practices and Future Developments," Kennecott Copper Corporation, AIME pre-print, March 1971.

7. Private communication with P. M. Turney, Rust Engineering, September 1972.

8. Private communication, Magma Copper Company, August 1972.

9. Personal communication--F.L. Bunyard (EPA) with J.D. Craig (Bur of Mines); Bureau of Mines; Albuquerque, New Mexico; December 28, 1973.

10. Fluor-Utah Engineers and Constructors, Inc., Study for the Kennecott Copper Company, See Data Reference No. 12.

11. "The Impact of Air Pollution Abatement on the Copper Industry," Fluor-Utah Engineers and Constructors, Inc., Report to Kennecott Copper Company, April 20, 1971.

12. Private communication with John Rinckhoff, Wellman Power Gas, September 1972.

13. Donovan, J. R., and Stuber, P. J., "Air Pollution Slashed at Sulfuric-Acid Plant," Chemical Engineering, November 30, 1970.

14. "Applicability of Reduction to Sulfur Techniques to the Development of New Processes for Removing SO_2 from Flue Gases," Allied Chemical, Industrial Chemicals Division, Report to National Air Pollution Control Administration, Department of Health, Education, and Welfare, 1968.

15. Private communication with James Henderson, American Smelting and Refining Company, November 1972.

16. Private Communication.

17. "Economic Impact of Anticipated Pollution Abatement Costs: Primary Copper Industry; Part 1, Executive Summary," A report to the Environmental Protection Agency, Arthur D. Little, Autumn 1972.

18. R. H. Leseman, Chender Associates; Engineering and Mining Journal; March 1973.

19. R. H. Leseman; The Cost of Clean Copper; Copper Studies; April 20, 1973.

6.2 ZINC EXTRACTION

6.2.1 Zinc Industry Economic Profile

The domestic zinc industry has changed dramatically over the past few years. The productive capacity of the industry has declined considerably due to the closing of seven zinc smelters since 1968. Domestic capacity in 1968 totalled approximately 1,300,000 short tons per year of slab zinc produced at a total of fourteen smelters. The reduction in industry capacity that accompanied the closing of the seven smelters amounted to 564,000 tons per year, or 42% of the 1968 capacity. At the end of 1972, therefore, industry capacity stood at approximately 766,000 tons per year of slab zinc. Future smelter closings have been announced which would further lower industry capacity to slightly over 700,000 tons per year of slab zinc. For a summary of the industry structure in 1968 and 1972, please refer to Table 6-15.

The rash of smelter closings has been due to a number of factors. To quote from the proceedings of a meeting of the Lead Industries Association and the Zinc Institute, Inc., "All (of the smelters that closed) were old, inefficient high labor and maintenance operations which were being severely squeezed by the pressures of rising wages, and high costs of materials and transportation. In addition, they faced unknown expenses to meet future environmental standards."[1] Also, the industry was facing a period of time where prices were relatively static,which was partially caused by a condition of overcapacity in the industry. In October 1969, the quoted price for prime western slab zinc stood at 15-1/2¢ per pound. After remaining at this level for nine months, the price then declined to 15¢ per pound where it remained for another seven months. It was not until May 1971 that prices rose above the 15-1/2¢ per pound level established in October 1969.

Future conditions in the industry look quite promising, however. Quoted slab zinc prices are now at their highest level in twenty years (Refer to Figure 6-7 for recent slab zinc price movements.) There is every indication that the price for prime western slab zinc will not recede from its current domestic level of approximately 35¢ per pound of prime western zinc but will either remain firm or advance to still higher levels in the

Table 6-15

DOMESTIC SLAB ZINC CAPACITY
1968-1972

Company/Smelter Location	Estimated Capacity (Short Tons) 1968	1972
ASARCO/Amarillo, Texas	55,000	55,000
ASARCO/Corpus Christi, Texas	108,000	108,000
Blackwell Zinc/Blackwell, Oklahoma	88,000	88,000
National Zinc/Bartlesville, Oklahoma	63,000	63,000
New Jersey Zinc/Palmerton, Pennsylvania	118,000	118,000
St. Joe Minerals/Monaca, Pennsylvania	225,000	225,000
Bunker Hill/Kellogg, Idaho	109,000	109,000
American Zinc/Dumas, Texas	58,000	---
American Zinc/Sauget, Illinois	84,000	---
Eagle-Picher/Henryetta, Oklahoma	55,000	---
New Jersey Zinc/Depue, Illinois	70,000	---
Matthiessen & Hegler/Meadowbrook, W. Va.	45,000	---
Anaconda/Great Falls, Montana	162,000	---
Anaconda/Anaconda, Montana	90,000	---
TOTAL	1,330,000	766,000

SOURCES: 1) Yearbook of the American Society of Metal Statistics for 1971. Issued June 1972.
2) U.S. Bureau of Mines.

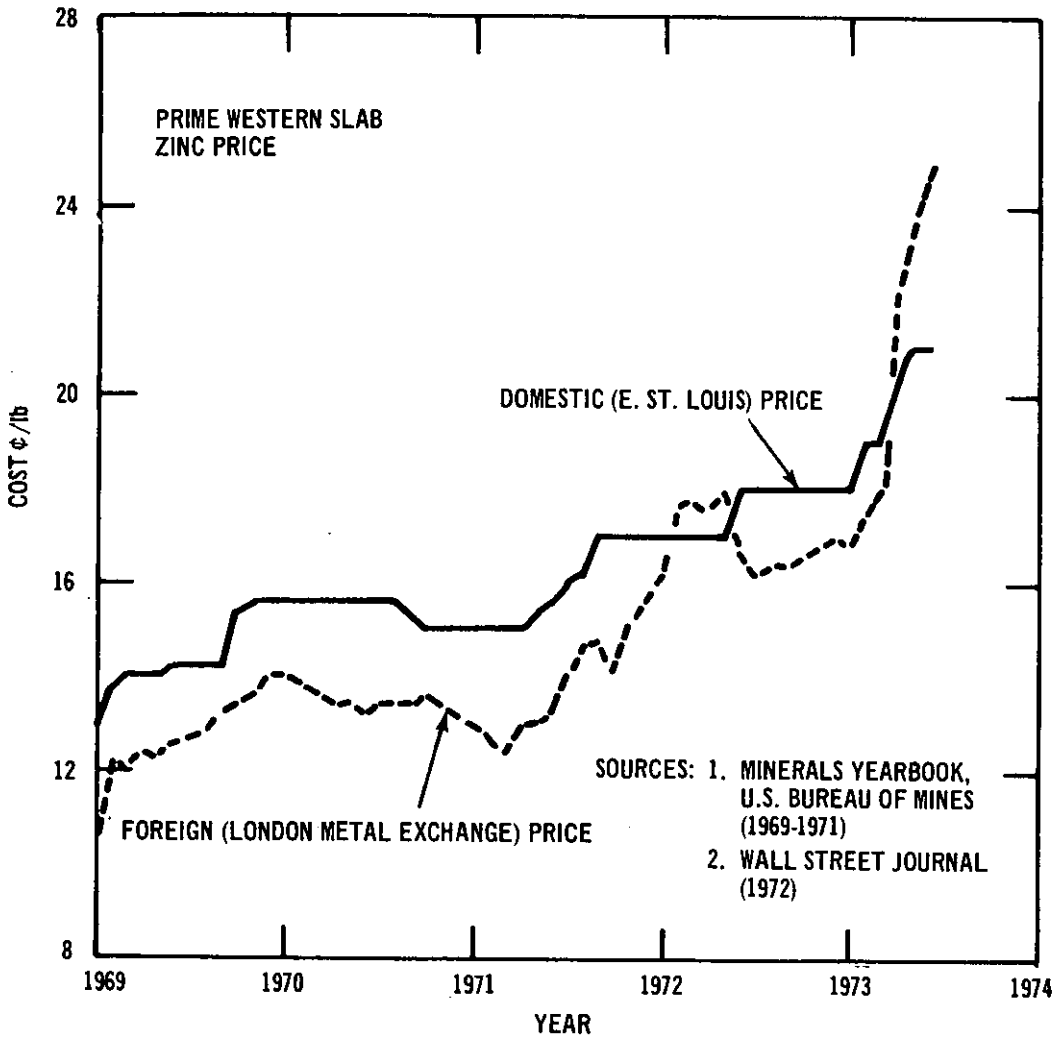

Figure 6-7. Monthly average slab zinc prices, 1969-1972.

near future. Firm or rising zinc prices are contingent upon two main factors. The first is that slab zinc demand must continue to increase over the years at a relatively steady rate without any serious or prolonged downturns. There is every indication that this will be the case, as will be discussed shortly. The second factor required for firm or rising slab zinc prices is that a situation of severe overcapacity in the industry does not occur again as it did during the 1968-1970 period that led to the closing of almost 50% of the domestic zinc productive capacity. Indications are such that the industry realizes that such an oversupply condition would not be good for the industry as a whole. If these two factors of continuing demand and balanced capacity are realized, then firm or rising domestic slab zinc prices are a very good possibility.

Referring to the quoted prices shown in Figure 6-7, it is seen that the differential between domestic zinc prices, as measured by the East St. Louis price, and foreign zinc prices, as measured by the price for slab zinc quoted on the London Metal Exchange, has maintained a relatively constant spread of 1-2¢ per pound. This differential is basically a result of transportation costs and import duties on foreign zinc. It is the domestic price that tends to move slightly after the price on the London Metal Exchange. If domestic producers attempt to raise prices so that the spread between domestic zinc and foreign zinc is greater than the traditional spread of 1-2¢ per pound, then the result will be to encourage foreign imports. Foreign slab zinc would then be substituted for domestic zinc and domestic producers would be forced to either reduce prices or suffer erosion of their market position. It follows that domestic price firmness depends upon stability in the foreign markets as well as stability in the domestic sector.

As mentioned previously, price stability depends upon a rising level of demand for slab zinc, not only in the United States but world-wide. It seems as if this condition will be fulfilled, at least in the near future. Slab zinc demand is expected to increase at an average rate of 3.5% per year between 1971 and 1975 for domestic consumption and by 4.5% per year for the free world overall.[1] This means that domestic demand

would amount to 1,400,000 - 1,500,000 tons of slab zinc in 1975, up from 1,254,000 tons in 1971. (Please refer to Table 6-16 for a summary of domestic slab zinc consumption.) This amount will be considerably in excess of current domestic production capacity. This situation will tend to foster higher prices and better profits for the firms that are now remaining in the domestic zinc industry. In order to attain a growth rate of 4.5% per year for the free world overall while the United States slab zinc demand is growing at 3.5% per year, the non-U.S. portion of the free world demand must increase by almost 5% per year. This relatively high level of demand will help to keep prices firm on the London Metal Exchange. This in turn will reinforce domestic zinc prices.

The United States has been heavily dependent in the past on foreign imports. Referring to Table 6-17, it can be seen that production of slab zinc from domestic ores accounted for only 34% of the total slab zinc supplied in the United States in 1971. Production of slab zinc from foreign zinc concentrates and imports of slab zinc totalled 59% of the slab zinc supplied in 1971. Table 6-18 summarizes the various foreign sources of ore and concentrates and slab zinc for 1971. It is expected that the trend of heavy reliance on imports for zinc concentrates will continue in the future. This is due to the relatively limited amount of zinc reserves that exist in the United States. Unless more economical means of mining lower grade domestic ores are found, or more domestic sources of supply are discovered, then the forecasted increase in domestic consumption of slab zinc will be met to a larger and larger degree by foreign sources of concentrates and slab zinc.

Even though steady increases in imported slab zinc are expected, there still appears to be a need for a substantial increase in domestic slab zinc capacity. Assuming that total domestic demand grows to 1,450,000 tons in 1975 (Table 6-16) and that slab zinc imports amount to 25% of this total, then 1,087,500 tons of slab zinc must be supplied by domestic smelters in 1975. Given a current domestic capacity of 766,000 tons (Table 6-15), this means that over 300,000 tons of domestic slab zinc capacity must be added prior to 1975. This would mean at least one new smelter, and possibly two, in addition to normal capacity increases at existing smelters. Recent announcements of tentative plans for two new electrolytic zinc smelters have been made. The total increase in domestic zinc capacity attributable to these new smelters is approximately 310,000 tons per year.

Table 6-16

DOMESTIC SLAB ZINC CONSUMPTION
(SHORT TONS)

Consumption	1969	1970	1971	Est. 1975
Galvanizing	493,000	474,000	475,000	550,000
Brass	179,000	128,000	150,000	175,000
Other Alloys	576,000	464,000	516,000	595,000
Other Uses	137,000	121,000	113,000	130,000
Total Slab Zinc	1,385,000	1,187,000	1,254,000	1,450,000

SOURCES: 1) Consumption for 1969; 1970, and 1971 from Minerals Yearbook, U.S. Bureau of Mines.
2) 1975 estimate based upon growth rate of 3.5%/yr for each category.

Table 6-17

SUPPLY OF SLAB ZINC BY SOURCE
(SHORT TONS)

SOURCE	1969	1970	1971	
Domestic Ores	463,000	447,000	408,000	34%
Foreign Concentrates	582,000	474,000	375,000	32%
Scrap	71,000	77,000	77,000	7%
Sub-Total Domestic Production	1,116,000	998,000	860,000	73%
Slab Imports	328,000	260,000	324,000	27%
Total Slab Zinc Supplied for Domestic Consumption, Exports, and Stocks	1,444,000	1,258,000	1,184,000	100%

SOURCE: Yearbook of the American Bureau of Metal Statistics for 1971. Issued June 1972.

Table 6-18

FOREIGN SOURCES OF ORE CONCENTRATES AND SLAB ZINC
1971

Country	Ore and Concentrates		Slab Zinc	
	Short Tons	%	Short Tons	%
Canada	209,000	56%	151,000	47%
Mexico	90,000	24%	10,000	3%
Honduras	22,000	6%	----	---
Peru	15,000	4%	24,000	7%
Finland	----	---	32,000	10%
Japan	3,000	1%	39,000	12%
Australia	----	---	9,000	3%
Other & Not Accounted For	36,000	9%	59,000	18%
Total	375,000	100%	324,000	100%

SOURCE: Yearbook of the American Bureau of Metal Statistics for 1971. Issued June 1972.

6.2.2 Cost Analysis of Alternative Control Strategies

The cost of controlling sulfur dioxide and particulate emissions at a new source zinc smelter is dependent upon both the particular smelting/refining process that is utilized in the new source smelter and the control level chosen for the process. The smelting/refining processes that have been considered for a new source zinc smelter are as follows:

The first process alternative shown below, the electrolytic process, is used for the production of special high-grade zinc (a relatively pure form of zinc that is sold at approximately a 1¢/lb premium over furnace-grade zinc). The other two process alternatives shown below are used for the production of prime western or intermediate-grade zinc by the pyrometallurgical process.

A. Electrolytic Process (Roasting and Leaching)

This process alternative does not incorporate a sintering machine for partial sulfur removal. After sulfur elimination in a roaster, the charge then goes to a leaching solution prior to electrolytic extraction.

B. Conventional Roasting and Sintering

In this alternative the zinc concentrate is first roasted in a conventional roaster in order to eliminate most of the sulfur contained in the concentrate. Additional sulfur elimination is then accomplished in a downdraft sintering machine.

C. Robson Process (Combined Roast/Sinter)

In this alternative a roaster is not used. Instead, a sintering machine with gas recirculation is used for sulfur elimination.

There are various means of controlling emissions of sulfur dioxide and particulates from new source zinc smelters. The control alternatives shown below are designed primarily for sulfur dioxide control, but control of particulates is also accomplished since these techniques also require the removal of particulates before the gas stream enters the control device. Costs for particulate control of strong sulfur dioxide streams are included in the following calculations of incremental pollution control costs since a clean stream is essential for the operation of the sulfur

dioxide control devices. Costs for baghouses or electrostatic precipitators on sinter plant streams are not included as incremental pollution control costs, since they are used both for by-product recovery and for emission control. The following is a list of the control options evaluated in the following discussions:

A. Single-Stage Sulfuric Acid Plants.

B. Dual-Stage Sulfuric Acid Plants.

C. Elemental Sulfur Plants coupled with Wellman Scrubbing Units.

D. Elemental Sulfur Plants coupled with DMA Units.

E. DMA Units only.

Options A-C are used only on strong sulfur dioxide streams. Options D and E are used only on weak sulfur dioxide streams.

Various combinations of emission control processes were coupled with the three smelting techniques considered to develop model smelters. These models are presented in Figure 6-8 through Figure 6-10. Based on physical process parameters developed from material balance data, cost estimates were derived for these control combinations and total capital and operating cost for each case is summarized in Table 6-19.

The costs associated with limestone neutralization of sulfuric acid were developed for those control alternatives incorporating acid plants. The capital and operating cost requirements for limestone neutralization are based on industry data and include the costs associated with the mining of limestone in addition to those associated with the neutralization of acid.[2] The operating cost requirements, however, assume that the limestone deposit is in close proximity to the smelter and thus reflect low transportation costs. Although limestone may be in plentiful supply, as indicated in discussions with the Bureau of Mines,[3] it is possible that transportation costs could increase the costs associated with limestone neutralization above those used in this analysis to some extent. However, even in those cases where specific smelters might be faced with high transportation costs for limestone, it is expected that the overall emission control costs including sulfuric acid neutralization would still be of the same order of magnitude as those developed for the various model smelters.

Figure 6-8 Model zinc smelting facilities - conventional roasting and sintering option.

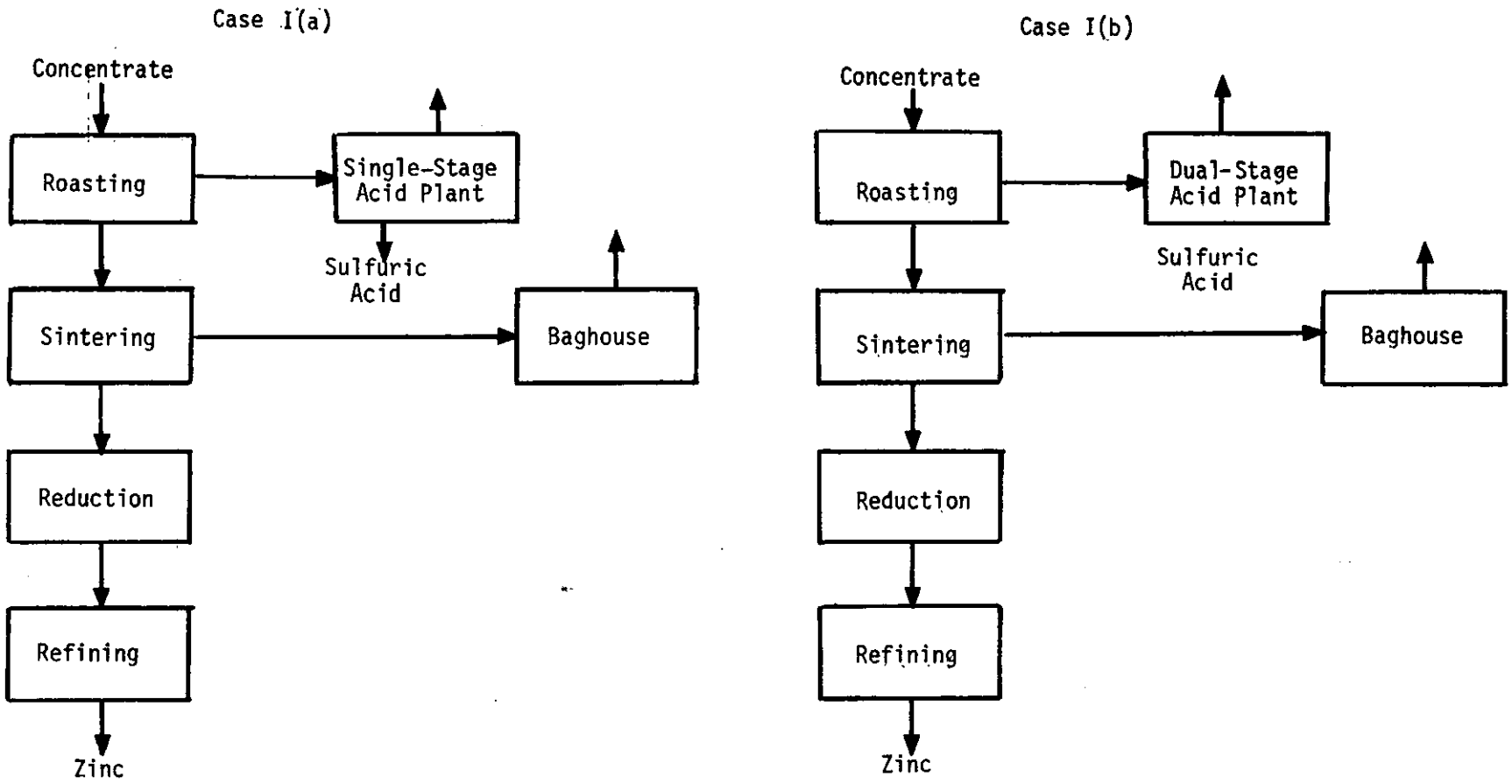

Figure 6-8 (Con't) Model zinc smelting facilities - conventional roasting and sintering option.

Case I(c)

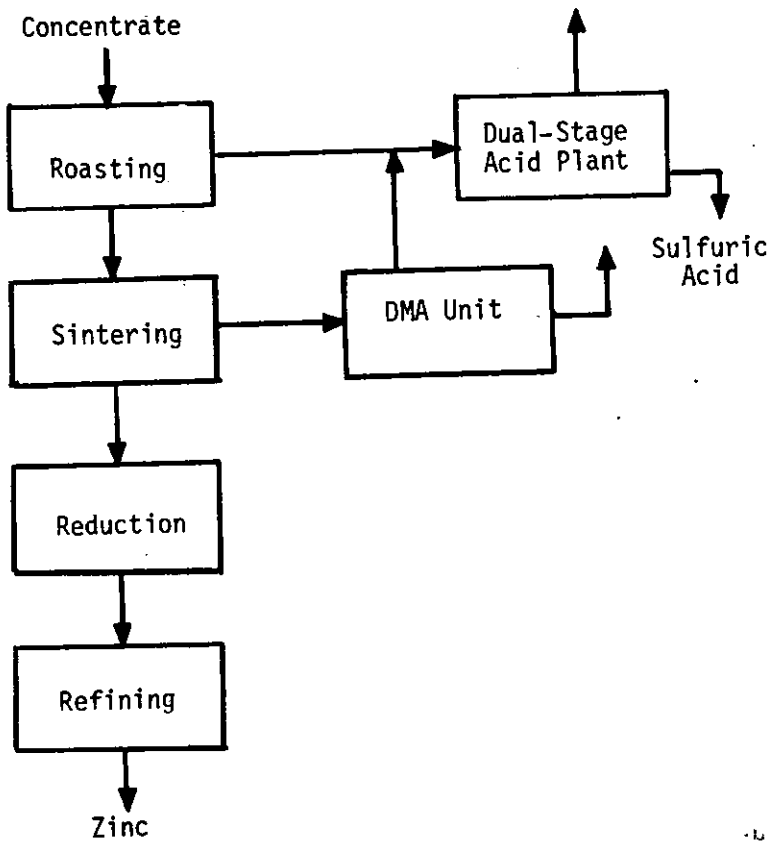

Case I(d)

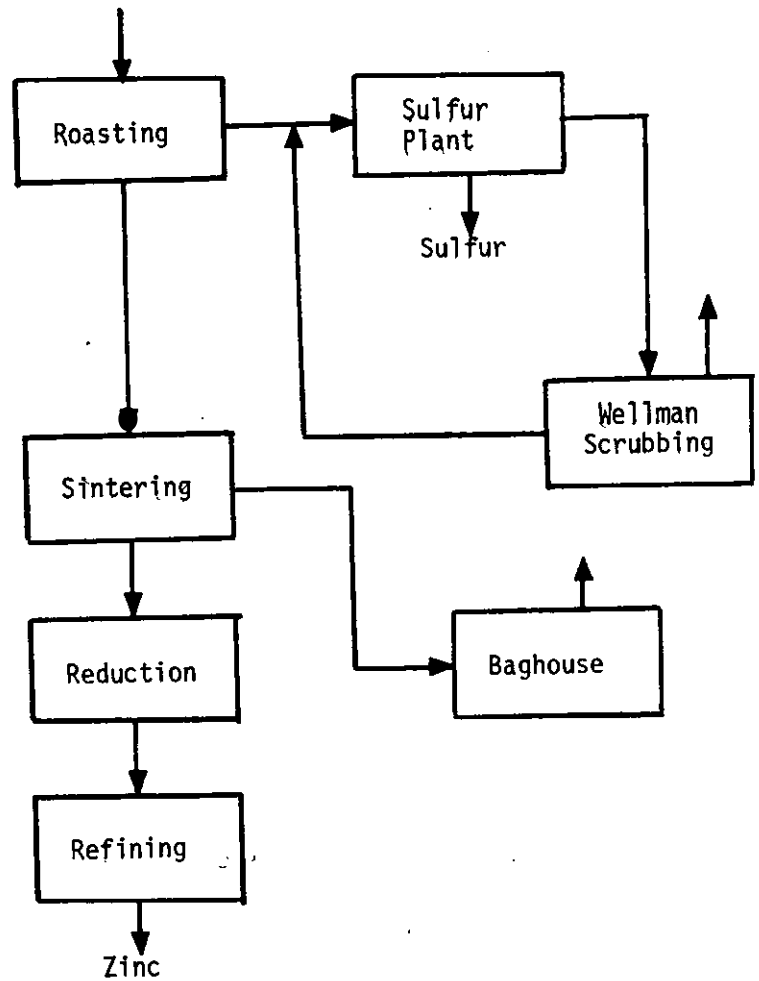

Figure 6-9 Model zinc smelting facilities - electrolytic zinc options.

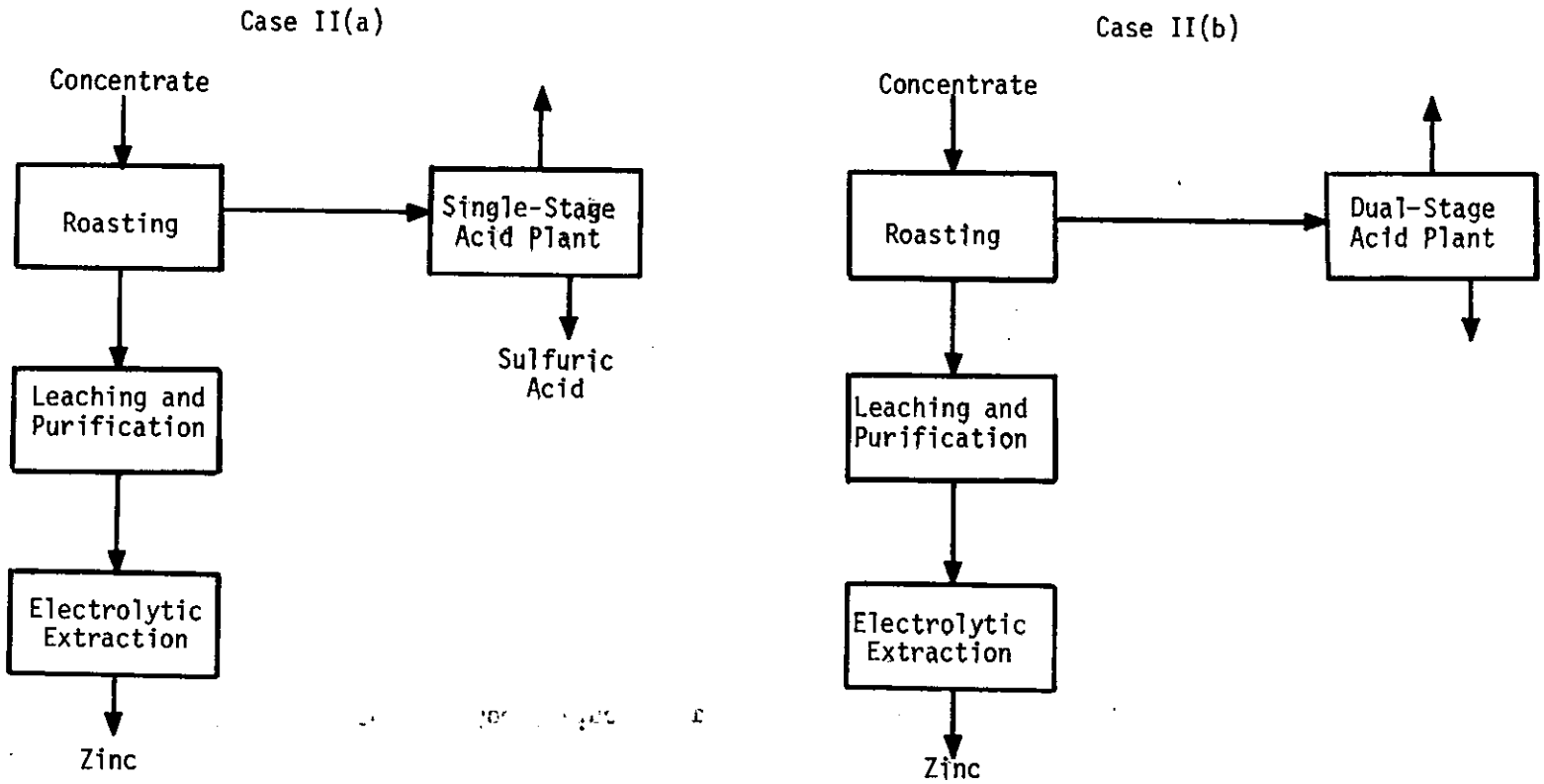

Figure 6-9 (con't) Model zinc smelting facilities - electrolytic zinc options.

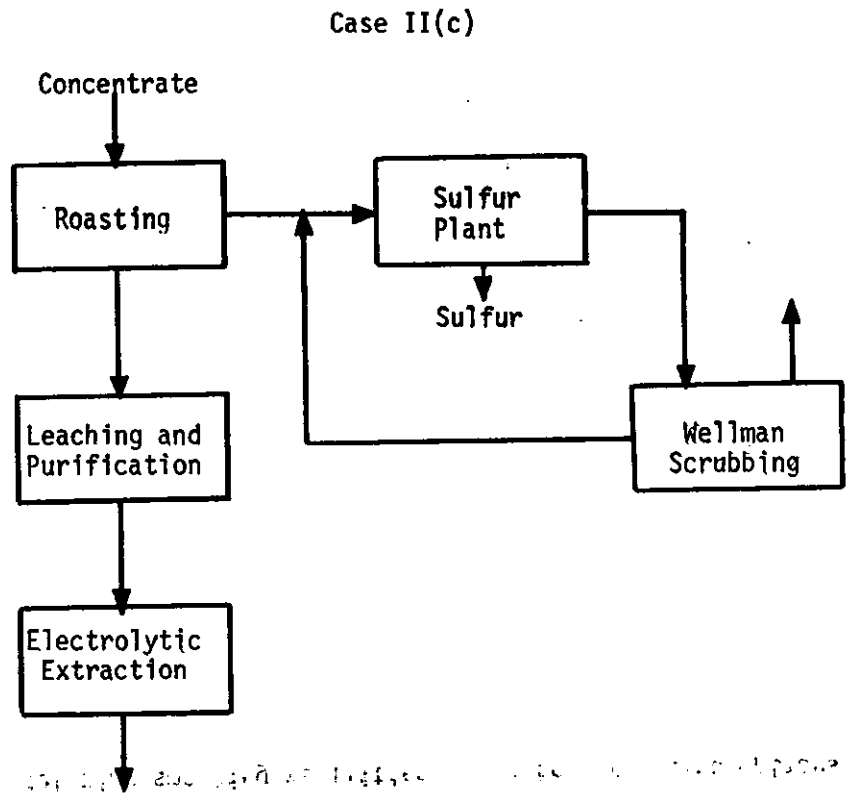

Figure 6-10 Model zinc smelting facilities - roast-sintering option.

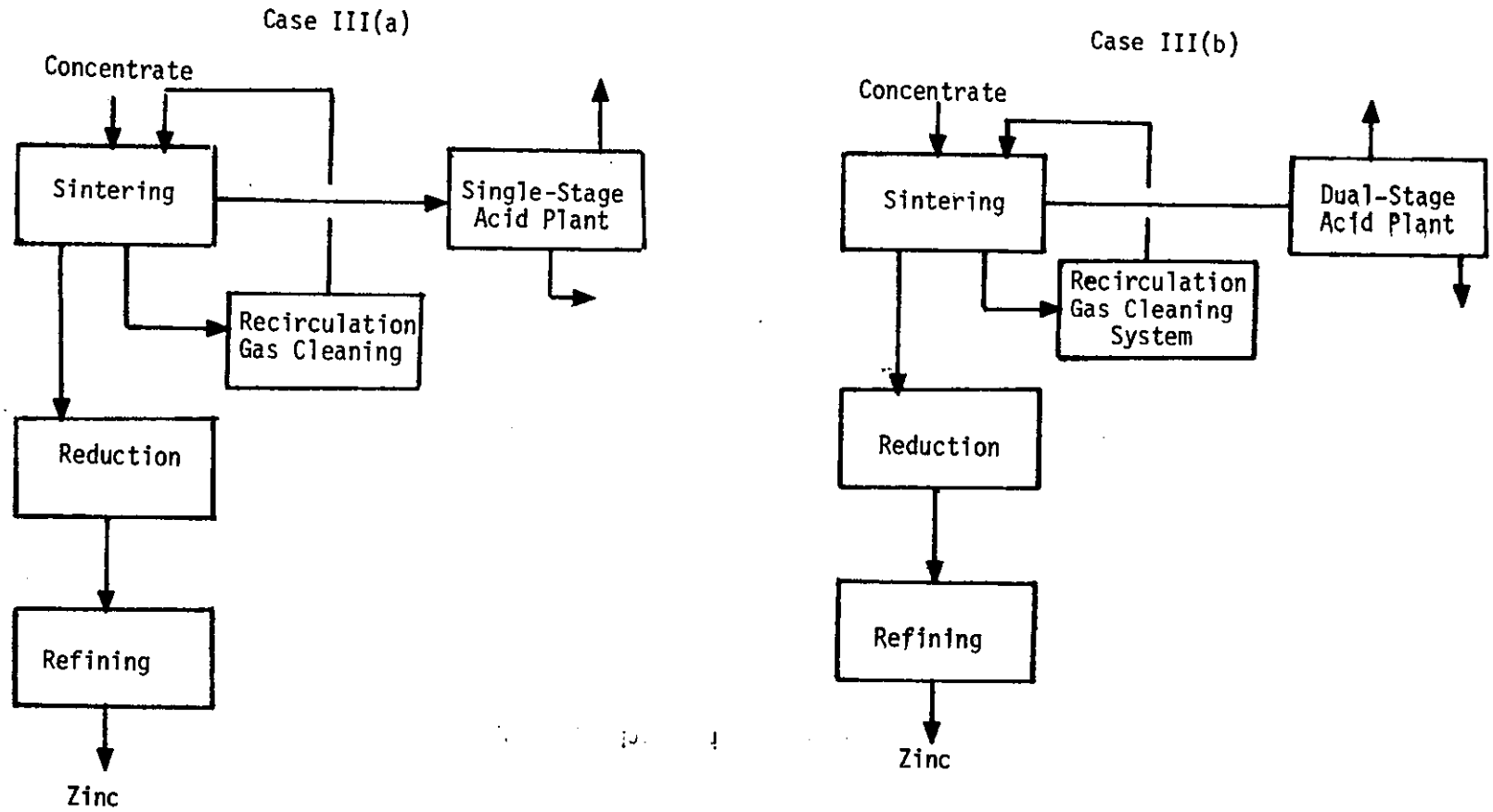

Figure 6-10 (Con't) Model zinc smelting facilities - roast-sintering option.

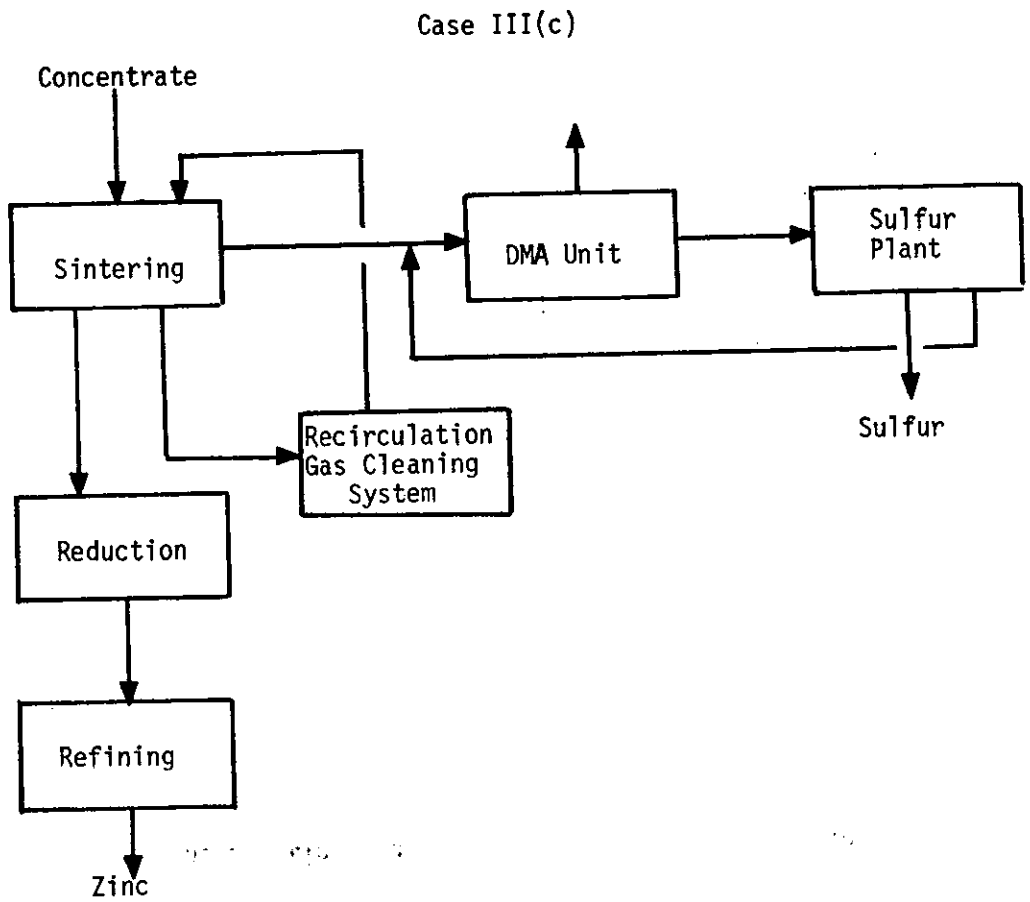

TABLE 6-19 CONTROL COSTS FOR MODEL ZINC SMELTERS

Model No.	Control Equipment	Capital Cost ($MM)	Capital Charges ($MM/yr)	Operating Cost ($MM/yr)	Total Cost ($MM/yr)	Overall Control (%)	Control Cost Cents/lb Zinc	Control Cost Cents/lb SO_2	Incremental Control Costs Δ Cents/lb Zinc	Incremental Control Costs Δ Cents/Δ lb SO_2
	Roaster/Sinter Smelting									
Ia	Single Stage Acid Plant	4.8	1.09	0.31	1.40	94.5(1)	0.70(2)	0.69(2)	—	—
	Neutralization	3.5	0.63	0.50	1.13					
		8.3	1.72	0.81	2.53	94.5(1)	1.26	1.24	—	—
Ib	Dual Stage Acid Plant	5.5	1.22	0.34	1.56	96.5(1)	0.78(2)	0.75(2)	0.08(3)	3.86(3)
	Neutralization	3.6	0.63	0.50	1.13					
		9.1	1.85	0.84	2.69	96.5(1)	1.34	1.29	0.08(3)	3.86(3)
Ic	DMA Scrubbing	21.7	4.16	0.68	4.84					
	Dual Stage Acid Plant	5.5	1.22	0.34	1.56	98.0(1)	3.20(2)	3.00(2)	2.42(4)	241(4)
	Neutralization	3.5	0.63	0.50	1.13					
		30.7	6.01	1.52	7.53	98.0(1)	3.76	3.53	2.42(4)	241(4)
Id	Sulfur Plant	6.8	1.52	0.79	2.31					
	Wellman Scrubbing	2.9	0.65	0.25	0.90					
		9.7	2.17	1.04	3.21	96.5(1)	1.60(5)	1.52(5)	—	—
	Electrolytic Smelting									
IIa	Single Stage Acid Plant	4.9	1.11	0.32	1.43	97.5(1)	0.71(2)	0.67(2)		
	Neutralization	3.5	0.64	0.51	1.15				—	—
		8.4	1.75	0.83	2.58	97.5(1)	1.29	1.21	—	—
IIb	Dual Stage Acid Plant	5.6	1.28	0.34	1.62	99.5(1)	0.81(2)	0.74(2)	0.10(3)	4.44(3)
	Neutralization	3.6	0.64	0.51	1.15					
		9.2	1.92	0.85	2.77	99.5(1)	1.38	1.27	0.09(3)	4.44(3)
IIc	Sulfur Plant	5.5	1.22	0.71	1.93					
	Wellman Scrubbing	2.9	0.65	0.20	0.85					
		8.4	1.87	0.91	2.78	99.5(1)	1.39(5)	1.28(5)	—	—

Table 6-19 (Con't) CONTROL COSTS FOR MODEL ZINC SMELTERS

Model No.	Control Equipment	Capital Cost ($MM)	Capital Charges ($MM/yr)	Operating Cost ($MM/yr)	Total Cost ($MM/yr)	Overall Control (%)	Control Costs Cents/lb Zinc	Control Costs Cents/lb SO_2	Incremental Control Costs Δ Cents/lb Zinc	Incremental Control Costs Δ Cents/Δ lb SO_2
	Robson Smelting									
IIIa	Single-Stage Acid Plant	7.3	1.65	0.37	2.02	96.5(1)	1.01(2)	0.94(2)	—	—
	Neutralization	4.3	0.77	0.50	1.27					
		11.6	2.42	0.87	3.29	96.5(1)	1.64	1.54	—	—
IIIb	Dual-Stage Acid Plant	8.4	1.90	0.40	2.30	99.0(1)	1.15(2)	1.04(2)	0.14(3)	4.53(3)
	Neutralization	4.3	0.77	0.50	1.27					
		12.7	2.67	0.90	3.57	99.0(1)	1.79	1.62	0.15(3)	4.53(3)
IIIc	DMA Scrubbing	19.4	4.45	0.54	4.99					
	Sulfur Plant	3.4	0.74	0.44	1.18					
		22.8	5.19	0.98	6.17	99.0(1)	3.09(5)	2.80(5)	—	—

Notes:

(1) Overall control efficiencies calculated assuming no fugitive emissions, no down-time of control equipment and tail gases from single-stage acid plants containing 2000 ppm SO_2, from dual-stage acid plants containing 500 ppm SO_2 and from DMA scrubbing and/or wellman scrubbing systems containing 500 ppm SO_2.

(2) Acid sold at zero netback to smelter.

(3) Incremental control costs reflecting use of dual-stage acid plant over single-stage acid plant.

(4) Incremental control costs reflecting DMA scrubbing of sinter machine off-gases over venting sinter machine gases directly to atmosphere.

(5) Sulfur sold at zero netback to smelter.

As a point of reference with regard to the costs in Table 6-19, the capital requirements for a 100,000 ton/yr new source zinc smelter utilizing either conventional roasting and sintering or the Robson process are on the order of $45MM-$50MM. Capital requirements for a 100,000 ton/yr new smelter utilizing the electrolytic process, however, are on the order of $80MM-$85MM. In each case, operating costs are in the range of 8¢-10¢/lb, with a profit margin typically on the order of 0.5¢/lb.

The overall control of sulfur dioxide emissions achieved with each control alternative is also summarized in Table 6-19. However, it should be noted that these percentages are theoretical and are based on the assumptions of total capture of all emissions with no fugitive emissions and no downtime of the control system. Thus these values are not entirely representative of what can be achieved in actual practice, but are for discussion and comparative purposes only. Table 6-19 also presents control costs expressed in terms of cents per pound of zinc produced and in terms of cents per pound of sulfur dioxide controlled. Incremental control costs expressed in terms of incremental cents per pound of zinc produced and in terms of incremental cents per incremental pound of sulfur dioxide recovered are also summarized. The basis for these incremental costs is explained in the footnotes to the tables.

The basis for the capital costs of the various control components are shown in Table 6-20. Costs were scaled to the appropriate capacity for each model smelter by use of the scale factors in Table 6-20. Below is an example of how the capital requirement of $8,442,000 for control of the electrolytic process by means of a single-stage acid plant with acid neutralization [Table 6-19, case II(a)] was derived:

Bases	Table 6-19	Table 6-20 Case II(a)
Total gas volume:	42,500 SCFM	37,500 SCFM
$\%SO_2$:	6%	7%
Acid production:	500 TPD	495 TPD

Calculations

Gas Cleaning:	$\$1,875,000 \times \left(\frac{37,500}{42,500}\right)^{.63}$	= $1,740,000
Acid Plant:	$\$4,515,000 \times \left(\frac{37,500}{42,500}\right)^{.63}$	= 2,335,000
Other:	20% of above	= 815,000
Neutralization:	$\$3,575,000 \times \left(\frac{495}{500}\right)^{.63}$	= 3,552,000
Total Capital		$8,442,000

The capital requirements for the other control alternatives and other process alternatives were derived in a similar fashion.

The operating cost requirements for the various control components are shown in Table 6-21. These cost parameters are the basis for the calculations of annual control costs. The operating cost requirements for the control processes were adjusted in a manner similar to the adjustment of the capital costs shown in the above example.

Several factors should be kept in mind when analyzing the results presented in Table 6-19. The first is that the control costs have been calculated on the basis that the smelter is a grass-roots zinc smelter. The cost to install and operate comparable control equipment in a modified existing smelter would be greater than in a grass-roots smelter. It is conceivable that the installed capital costs for the same control equipment could be twice as much in a modified smelter as they would be in a grass-roots smelter. Operating costs would not

Table 6-20

CAPITAL COSTS FOR SELECTED SO_2 CONTROL ALTERNATIVES

Control Alternative:	Single-Stage Sulfuric Acid Plant (Including Wet Cleaning and Acid Disposal)	Dual-Stage Sulfuric Acid Plant (Including Wet Cleaning and Acid Disposal)	Elemental Sulfur Plant (Methane Reduction)	Elemental Sulfur Plant (Methane Reduction)
Size:	500 TPD Acid	500 TPD Acid	180 TPD Sulfur	180 TPD Sulfur
Inlet SO_2 Concentration:	6% SO_2	6% SO_2	90% SO_2	15% SO_2
Capital Requirements (1973$)				
Gas Cleaning Capital	$1875M	$1875M	(Not Incl.)	(Not Incl.)
Process Capital	2515	3180	$2230M	$4635M
Disposal Capital	3575	3575	-0-	-0-
Other*	880	1010	445	925
Total Capital	$8845M	$9640M	$2675M	$5560M
Capital Scale Factor	.63	.63	.58	.58
Reference :	4	4	4	4

*Includes capital for site preparation (including hook-up of existing utilities) and contingencies.

Table 6-20. (Con't)

CAPITAL COSTS FOR SELECTED SO_2 CONTROL ALTERNATIVES

Control Alternative:	DMA Absorption	Wellman Scrubbing (Sulfite/Bisulfite)	Wet Cleaning Operation
Size:	50,000 SCFM	18 TPD Sulfur	50,000 SCFM
Inlet SO_2 Concentration:	5% SO_2	0.6% SO_2	Variable
Capital Requirements (1973$)			
Gas Cleaning Capital	(Not Incl.)	(Not Incl.)	$2095M
Process Capital	$ 9960M	$2345M	-0-
Disposal Capital	-0-	-0-	-0-
Other*	1990	470	420
Total Capital	$11950M	$2815M	$2515M
Capital Scale Factor	.70	.53	.68
Reference:	6	7	4

*Includes capital for site preparation (including hook-up of existing utilities) and contingencies.

Table 6-21

OPERATING COSTS FOR SELECTED SO_2 CONTROL ALTERNATIVES

Control Alternative:		Single-Stage Sulfuric Acid Plant (Including Wet Cleaning and Acid Disposal)		Dual-Stage Sulfuric Acid Plant (Including Wet Cleaning and Acid Disposal)		Elemental Sulfur Plant (Methane Reduction)	
Size:		500 TPD Acid		500 TPD Acid		180 TPD Sulfur	
Inlet SO_2 Concentration:		6% SO_2		6% SO_2		90% SO_2	
Operating Parameter	Cost	Unit Ratio	Reference	Unit Ratio	Reference	Unit Ratio	Reference
1. Labor (Incl. Super.)	$5/man-hr	72 man-hr/day	4	72 man-hr/day	4	54 man-hr/day	4
2. Maintenance	---	6% x Capital	4	6% x Capital	4	5% x Capital	4
3. Cooling Water	$.03/1000 Gal	10 Gal/MSCF SO_2	4	10 Gal/MSCF SO_2	4	1800 Gal/Ton Sulfur	4
4. Process Water	$.50/1000 Gal	8.9 Gal/MSCF Total	4	8.9 Gal/MSCF Total	4		
5. Raw Water	$.25/1000 Gal						
6. Condensate	$.05/1000 Gal						
7. Steam	$.80/1000 Gal						
8. Power	$.01/KWH	.67 KWH/MSCF Total	4	.80 KWH/MSCF	8	40 KWH/Ton Sulfur	4
9. Methane	$.40/MCF					13.4 MCF/Ton Sulfur	4
10. Fuel	$.40/MM BTU						
11. Catalyst	$.13/lb					3.8 lb/Ton Sulfur	4
12. DMA	$.26/lb						
13. H_2SO_4	$15/Ton						
14. Soda Ash	$35/Ton						
15. Caustic Soda	$80/Ton						
16. Limestone	$5/Ton						
17. Acid Disposal: Direct		$3.10/Ton Acid	6	$3.10/Ton Acid	6		
18. Acid Disposal: Capital-Related		18% x Neut. Capital	6	18% x Neut. Capital	6		
19. Depreciation	Linear	15 years	8	15 years	8	15 years	3
20. Capital Charges	---	10% x Capital	9	10% x Capital	9	10% x Capital	2

Table 6-21 (Con't)

OPERATING COSTS FOR SELECTED SO_2 CONTROL ALTERNATIVES

Control Alternative:	Elemental Sulfur Plant (Methane Reduction)		DMA Absorption		Wellman Scrubbing (Sulfite/Bisulfite)	
Size:	180 TPD Sulfur		50,000 SCFM		18 TPD Sulfur	
Inlet SO_2 Concentration:	15% SO_2		5% SO_2		0.6% SO_2	
Operating Parameter	Unit Ratio	Reference	Unit Ratio	Reference	Unit Ratio	Reference
1. Labor (Incl. Super.)	54 Man-Hr/Day	5	24 Man-hr/Day	4	56 Man-hr/Day	5
2. Maintenance	5% x Capital	5	6% x Capital	4	6% x Capital	5
3. Cooling Water	3600 Gal/Ton Sulfur	5				
4. Process Water	860 Gal/Ton Sulfur	5				
5. Raw Water			34.5 Gal/MSCF Total			
6. Condensate			4.9 lb/MSCF Total	4	21,000 lb/Ton Sulfur	5
7. Steam			.41 KWH/MSCF Total	4	310 KWH/Ton Sulfur	5
8. Power	181 KWH/Ton Sulfur	5				
9. Methane	18.4 MCF/Ton Sulfur	5				
10. Fuel						
11. Catalyst	3.8 lb/Ton Sulfur	5				
12. DMA			.0042 lb/MSCF Total	4		
13. H_2SO_4			.1540 lb/MSCF Total	4		
14. Soda Ash			.1350 lb/MSCF Total	4		
15. Caustic Soda					144 lb/Ton Sulfur	5
16. Limestone						
17. Acid Disposal: Direct						
18. Acid Disposal: Capital-Related						
19. Depreciation	15 years	8	15 years	8	15 years	3
20. Capital Charges	10% x Capital	9	10% x Capital	9	10% x Capital	2

Table 6-21 (Con't)

OPERATING COSTS FOR SELECTED SO_2 CONTROL ALTERNATIVES

Control Alternative:	Wet Cleaning Operation	
Size:	50,000 SCFM	
Inlet SO_2 Concentration:	Variable	
Operating Parameter	**Unit Ratio**	**Reference**
1. Labor (incl. Super.)	24 Man-Hr/Day	4
2. Maintenance	8% x Capital	4
3. Cooling Water		
4. Process Water		
5. Raw Water		
6. Condensate	8.9 Gal/MSCF Total	4
7. Steam		
8. Power		
9. Methane	.107 KWH/MSCF Total	4
10. Fuel		
11. Catalyst		
12. DMA		
13. H_2SO_4		
14. Soda Ash		
15. Caustic Soda		
16. Limestone		
17. Acid Disposal: Direct		
18. Acid Disposal: Capital-Related		
19. Depreciation	15 years	8
20. Capital Charges	10% x Capital	9

increase as much, but depreciation and other capital-related charges would increase proportionally with the increased capital requirements.

Another factor to consider is that the control costs shown in Table 6-19 will vary with the amount of sulfur contained in the concentrate. All control cases shown in Table 6-19 are based upon a model smelter that processes 100,000 tons per year of zinc metal contained in a concentrate with an analysis of 55% zinc and 30% sulfur. The 100,000 ton per year capacity is typical of most existing domestic zinc smelters and is in approximate agreement with industry announcement of proposed new smelter construction. The concentrate analysis was assumed to be representative of the concentrate processed at a new source zinc smelter, but it is probable that variations in this analysis will occur. A smelter that processes ores that are higher in sulfur content relative to the contained zinc than the ores processed by the model smelter will have control costs greater than what is shown for the model smelter. For example, a 100,000 ton per year electrolytic process smelter that processes concentrates containing 55% zinc and 30% sulfur and uses a single-stage acid plant without neutralization for control of the roaster will incur capital costs of approximately $4.9MM and annualized costs of 0.71¢/lb of zinc (refer to Table 6-19, Case II(a)). If the sulfur content were to increase to 35% sulfur in the concentrate and the zinc analysis remains at 55% zinc, then the capital costs increase from $4.9MM to $5.4MM and the annualized control costs increase from 0.71¢/lb to 0.80¢/lb of zinc. Of course, comparable savings would be realized if the sulfur content were to decrease relative to the zinc analysis. It is expected that, on the average, the variations in sulfur content will approximate the model smelter analysis, but the possibility does remain that a new source smelter could have greater (or less) control costs than are shown in the attached tables.

Another factor to keep in mind when examining the attached tables is the assumptions regarding the treatment or sale of the by-products produced by the various pollution control alternatives. In Table 6-19 there are shown two basic alternatives dealing with disposition of the sulfuric acid that is produced by either a single-stage or a dual-stage acid plant. The first alternative is that of selling the acid at zero netback to the production plant. This alternative assumes that the price paid to the producer for the acid is equal to the producer's costs of shipping the acid to the purchaser. With this alternative the control cost is equal to the production cost of the acid. The second basic alternative dealing with disposition of the acid is that of neutralization. In this alternative the acid is first neutralized and then disposed of in lined ponds so that no water pollution problems are presented. In this alternative the control cost is equal to this production cost of the acid plus the cost of neutralization and disposal. With regard to the production of sulfur, the only alternative presented is that of sale of the sulfur at zero netback. In this case the cost of control is equal to the production cost of the sulfur. There are, of course, other alternatives besides the ones just described for by-product disposition. In order to estimate the economic impact of various disposal schemes, Table 6-22 has been prepared. The options shown have been calculated for a new source smelter that utilizes the electrolytic process and is controlled either by a dual-stage acid plant or an elemental sulfur plant. The results for other smelter processes besides the electrolytic process would be comparable.

As can be seen, the method of disposition of the by-products makes a considerable difference in the final control cost. The smelter operator who is able to sell his acid, even at zero netback or a slight loss, is in a much better position than the producer who must neutralize his acid. If, however, it is possible to sell acid at approximately $9/ton, net to the plant, then the producer could recover his control costs.

A smelter operator would probably not produce sulfur instead of sulfuric acid unless he was fairly certain that he would have to neutralize his acid production. Not only are the capital requirements for sulfur production approximately 50% more than for acid production

Table 6-22. Economic impact of by-product disposition

Option	Capital Requirement ($MM)	Annualized Control Cost (¢/lb of Zinc)
1. Produce acid and sell at $5/ton net to plant	$5.6MM	0.34¢/lb
2. Produce acid and sell at zero netback to plant (Table 6-19, Case II(b))	$5.6MM	0.81¢/lb
3. Produce acid and neutralize (Table 6-19, Case II(b))	$9.2MM	1.38¢/lb
4. Produce acid and sell at loss of $5/ton	$5.6MM	1.18¢/lb
5. Produce sulfur and sell at $15/ton net to plant	$8.4MM	0.99¢/lb
6. Produce sulfur and sell at zero netback (Table 6-19, Case II(c))	$8.4MM	1.39¢/lb
7. Produce sulfur and sell at net loss of $15/ton	$8.4MM	1.79¢/lb

without neutralization, but the annualized control costs are generally less for acid production than for sulfur production. If a smelter operator is faced with no markets for his acid production and thus required to neutralize the acid that he produces, then if he can sell sulfur at even a zero netback he will probably choose that option since the operating costs are almost identical (1.38¢/lb versus 1.39¢/lb), but the acid production and neutralization capital costs are higher than the sulfur production capital costs ($9.2MM versus $8.4MM).

A brief discussion of each control alternative summarized in Table 6-19 and represented schematically in Figures 6-8 through 6-10 follows:

Case I(a)

Off-gases from the roaster are ducted to a single-stage acid plant. Thus the acid plant is sized to process a gas stream of 36,500 SCFM and 7 percent SO_2. Acid production is 487 TPD of 100% H_2SO_4.

Case I(b)

Essentially the same as case II(a) with the exception of the incorporation of a dual-stage acid plant rather than a single-stage acid plant. Acid production is 497 TPD of 100% H_2SO_4.

Case I(c)

Off-gas from the roaster is combined with concentrated SO_2 gas from a DMA unit. The gas stream to the dual-stage acid plant is 37,000 SCFM at 7 percent SO_2. Gas flowrate to the DMA unit is 72,000 SCFM at 0.1 percent SO_2. Thus the acid plant and the DMA unit are sized to accommodate their respective gas streams; 320 TPD of 100 percent SO_2 is produced.

Case I(d)

Off-gases from the roaster are combined with concentrated SO_2 from a Wellman scrubbing unit and ducted to an elemental sulfur plant. Flowrate to the sulfur plant is 22,000 SCFM at 14 percent SO_2 and flowrate to the Wellman scrubbing unit is 29,000 SCFM at 1 percent SO_2. Elemental sulfur production is 165 TPD.

Case II(a)

Off-gas from the roaster is ducted to a single-stage acid plant. Thus the acid plant is sized to process 37,500 SCFM off-gas at 7 percent SO_2. Acid production is 495 TPD of 100% H_2SO_4.

Case II(b)

Essentially the same as case I(a) with the exception of the incorporation of a dual-stage acid plant rather than a single-stage acid plant. 505 TPD of 100% H_2SO_4 is produced.

Case II(c)

Off-gas from the roaster is ducted to an elemental sulfur plant at a maximum flowrate of 22,000 SCFM and 13 percent SO_2. The emissions from the sulfur plant are ducted to a Wellman scrubbing system at a flowrate of 29,000 SCFM and 1% SO_2; 165 TPD of elemental sulfur is produced.

Case III(a)

Internal gas recirculation is utilized to concentrate off-gases which are ducted to a single-stage acid plant. Flowrate to the acid plant is 72,500 SCFM at 5 percent SO_2. Acid production is 673 TPD of 100 percent H_2SO_4.

Case III(b)

Essentially the same as case III(a) with the exception of the incorporation of a dual-stage acid plant rather than a single-stage acid plant. Acid production is 703 TPD of 100 percent H_2SO_4.

Case III(c)

Off-gas from the sintering machine is combined with the tail gas from an elemental sulfur plant producing a gas stream of 79,500 SCFM at 5 percent SO_2 which is then processed in a DMA unit. The concentrated SO_2 stream is ducted to the elemental sulfur plant where elemental sulfur production is 229 TPD.

6.2.3 Impact of New Source Performance Standards

Summary--

The economic impact of the proposed new source performance standards (NSPS) depends on the standards developed by various States as part of their implementation plans to meet the National Ambient Air Quality Standards. In Pennsylvania, the standards limit emissions of sulfur dioxide to no more than 500 ppm. Thus, there is no impact associated with the proposed NSPS. In other States such as Texas, where the standards are dependent on stack parameters, it appears that the proposed NSPS will have significant impact.

The additional capital costs incurred by a new electrolytic or conventional roasting and sintering process zinc smelter to comply with the proposed standards are about $5.5 MM. This represents an increase of about 7% and 11%, respectively, in overall capital investment for the smelter. The magnitudes of these increases do not appear significant in determining whether or not a new smelter would be built.

The increased annualized costs incurred for acid manufacture without neutralization are about 0.81 and 0.78 ¢/lb of zinc for new electrolytic and conventional smelters, respectively. Smelter profit margins are estimated to be insufficient to absorb these costs. Furthermore, it does not appear that these costs could be passed forward to the market in all cases. However, it appears that most of these costs could be passed back to the mines by reducing the price paid to mines for zinc concentrates. Thus, the major impact of the proposed standards will be to decrease the useful life of high-cost mines and to reduce mine reserves in the United States.

The annualized cost for the industry to comply with water pollution standards has been estimated at 0.20 ¢/lb of zinc. It is not expected that the costs for air and water pollution control will preclude entry to the domestic zinc industry. Costs associated with OSHA and the Mine Safety Act are expected to be minimal.

General Discussion--

Future growth in the domestic zinc industry could come about either by re-opening smelters that have been closed but not scrapped; by modifying existing, on-going smelters; or by constructing new, grass-roots smelters. However, since smelters that have been closed but not scrapped would not be classified as new sources if they were to reopen, then only modified existing smelters or new smelters need be considered for purposes of impact analysis.

The impact of new source standards on modified smelters would vary depending upon the state standard that applies to the particular modification. The states where modifications to existing smelters might be expected are Pennsylvania, Idaho, and Texas. No modifications or expansions have been announced for smelters in these states, and none are anticipated in the immediate future, but modifications are possible.

In Pennyslvania the limitation on sulfur dioxide emissions is 500 PPM. Therefore, there would be no impact for a new source performance standard that was equivalent to an emission level of 500 PPM or more.

In Idaho the limit on sulfur dioxide emissions from the existing zinc smelter has been proposed by EPA at 96% overall control. This appears to be roughly equivalent to the degree of control achievable through the installation of a single-stage sulfuric acid plant on the electrolytic smelter that is currently operating in Idaho. If this control level is promulgated for the Idaho smelter, a Federal new source standard equivalent to a double-stage sulfuric acid plant would mean that if this smelter in Idaho modified its facility, it would incur additional capital costs of

$800,000 and additional operating costs of approximately $200,000/year (0.10¢/lb of zinc) in order to bring its present facility in line with the Federal new source standard. However, installed capital costs for pollution control equipment could be as much as twice as high for a modified facility as for a grass-roots facility; thus this smelter might actually incur additional capital costs of the order of magnitude of $1,600,000 rather than the $800,000 quoted above. The additional costs above those incurred by a grass-roots facility are a function of the space available for additional pollution control equipment and the amount of re-ducting and re-piping required. These cost estimates do not include pollution control costs that would be incurred if additional capacity was installed. Also, the cost of acid neutralization was not included in the above cost estimates. If acid neutralization was required, then costs would increase appreciably.

At this time it is not possible to evaluate the incremental impact of Federal new source performance standards over the Texas standards. The Texas standards are dependent on stack parameters and thus are applicable to each facility on a case-specific basis.. It appears, however, that even a standard of 2000 PPM or its equivalent would have a significant impact when compared to the Texas standards for sulfur dioxide emissions.

It is in the area of new, grass-roots smelters where growth is most likely to occur in the domestic zinc industry. There is a very good possibility that at least two new zinc smelters will be constructed in the United States between now and 1975. Again, the incremental impact of Federal new source performance standards

depends on the particular state standard that is in effect at the time the new smelter is constructed. The results presented in Table 6-19 represent the cost impact only if there were no state standards. However, since it is the total cost impact that is of primary importance to the operator of a new source smelter, the following analysis will be presented on this basis.

It is most likely that a new grass-roots zinc smelter would utilize either the electrolytic process or the conventional roasting and sintering process. It is extremely doubtful that a new smelter would use the Robson process (combined roasting and sintering by means of a sintering machine only) for the production of furnace-grade zinc, as pollution control costs are particularly high for a Robson process smelter due to the relatively dilute streams that must be treated.

A new source zinc smelter would probably have a capacity of at least 100,000 tons/year of slab zinc. Assuming no neutralization of acid is required and that the acid can be sold at zero netback to the smelter, then a new source electrolytic smelter with a capacity of 100,000 tons/year would incur additional capital costs of $5.6MM for pollution control equipment (refer to Table 6-19). This is equivalent to approximately $56/ton of installed capacity. Since the cost of an electrolytic process smelter is estimated at $800-$850/ton of installed capacity, this means that additional capital costs on the order of 7% would be required. The magnitude of the increase does not appear to be significant in determining whether or not a new smelter would be constructed.

Although the additional capital costs for pollution control equipment at a new source electrolytic smelter could probably be absorbed by the smelter without much difficulty, the increased operating costs are another matter. The additional annualized costs for acid manufacture, without neutralization, amount to 0.81¢/lb of zinc (Table 6-19). Smelter profit margins have been estimated to be insufficient to allow absorption of costs of this magnitude without a severe reduction in the rate of return on capital. This means that these costs must either be passed forward to the market or backward to the mines. However, it is not possible for an individual smelter to unilaterally increase its price for slab zinc. Zinc is a commodity whose price is determined by the market as a whole,and an individual producer would not be able to raise prices unless the other producers did the same. If the owner of the new source smelter did not have an operating cost advantage in relation to his competitors, then the only time that he would be able to recover his additional pollution control costs would be if prices had been driven up by a generally strong demand coupled to somewhat restricted supplies of slab zinc. This situation would mean that smelter profits would be greater than what are normally experienced. In this case, some of the cost increase due to the addition of pollution control equipment could be absorbed by the smelter. This possibility, however, does not appear to be viable in the long run. Therefore, absorption by the smelter of pollution control costs, along with passing the cost increase forward to the market, does not appear to be feasible in the domestic zinc industry.

One possibility remains for long-term recovery of incremental pollution control costs. This possibility is the absorption of the cost increases by the mines. By reducing the amount paid to the mines for concentrates, the smelter operator can reduce his operating costs and still make the same profit at the existing market price that he would have made prior to incurring the incremental pollution control costs. In order to do this, however, a captive mine is essential. If the mine is not captive, then the mine owner will sell his concentrates to other smelters that do not have to comply with new source performance standards, either domestic or foreign. For this reason, it is necessary that the operator of a new smelter must have an assured, low-cost source of supply. If such supplies are available, then pollution control costs can be absorbed by the mines instead of either the smelter or the market place. This is not to imply that there would be no impact upon the mines. The effective life of the mines would be decreased if mining net-backs decreased because it would mean that only low-cost, high-grade ore bodies could be mined. While annual profitability would probably remain pretty much unchanged, the useful life of the mine would tend to decrease. High-cost mines would be forced out of business so even the integrated smelter would lose some of his source of supply unless the mines he owned were all relatively low-cost. Thus for the specific case of a new source electrolytic process smelter, it appears that a cost increase of 0.81¢/lb of zinc could be absorbed by the mines while the additional capital costs of $5.6MM could be raised by the smelter owner.

A new source smelter utilizing the conventional roasting and sintering process could also probably comply with a new source performance standard. The additional capital costs of $5.4MM for a dual-stage acid plant amounts to an increase of 11% at a capital level of approximately $50MM for a new source conventional smelter. This extra amount of capital could probably be raised by the smelter owner without a great deal of difficulty. The additional operating costs of 0.78¢/lb would probably be passed back to the mine in a manner similar to the pass-back described above for electrolytic process smelters. However, if scrubbing of the sinter plant gases was required and the only process suitable for this was DMA scrubbing, it appears that difficulties will start to arise in absorbing the additional costs. A capital increase of $21.7MM in addition to the capital requirements of $4.8MM noted above would be required for scrubbing of the sinter plant gas. Operating costs would rise by 2.42¢/lb for the scrubbing operation to a total of 3.12¢-3.20¢/lb of zinc. It is almost a certainty that a smelter would not choose to absorb capital costs of the magnitude shown above. Also, there appears little chance that the additional operating costs could be passed back to the mines. It is more likely that a new smelter would utilize the electrolytic process which does not require scrubbing of the sinter plant gases.

The preceding discussion of cost impact has been primarily concerned with the use of acid plants without neutralization of the acid. Table 6-19 shows that the manufacture of elemental sulfur only becomes feasible if the only alternative is neutralization of sulfuric acid. However, a grass-roots smelter faced with a choice of either acid neutralization or sulfur manufacture would probably not be built.

The additional capital and operating costs would probably deter the construction of a new source smelter. Whereas it is not totally impossible for the additional capital costs to be absorbed by the smelter and for the additional operating costs to be absorbed by the mines, it is highly unlikely that a smelter operator would choose this alternative. He would most likely build his smelter outside the United States where pollution control requirements are not as stringent. It appears unlikely that future acid markets will cease to exist in all cases, thereby requiring acid neutralization. The Gulf Coast appears to be an area where acid manufacture would be a viable possibility. A smelter operator will not voluntarily locate his new facility in an area where acid neutralization is a certainty but instead will choose an area where acid manufacture is possible.

In summary, it appears that the major effect of the new source performance standards will be to decrease mine reserves in the United States and thereby increase the domestic zinc industry's reliance on foreign ores unless additional low-cost ore bodies are found, or all smelters, both domestic and foreign, are required to comply with pollution control regulations that are equivalent to the new source performance standards.

Costs for control of air pollutants are not the only environmental costs being faced by the domestic zinc industry. It has been estimated by Arthur D. Little, Inc.,[10] that capital requirements for the

industry to comply with state water pollution regulations at existing mines and smelters would amount to $14.0 MM. Annual costs for compliance with these water standards would amount to 0.20 ¢/lb of zinc produced. Arthur D. Little stated that water pollution costs were more or less uniform within the industry and would not lead directly to any plant closings. It can be inferred that these costs would not preclude entry to the domestic zinc industry, either. Arthur D. Little notes, however, that water pollution control costs could increase dramatically if more stringent standards are required. Not specifically estimated are costs associated with OSHA or the Mine Safety Act. These cost are expected to be minimal.

REFERENCES FOR SECTION 6.2

1. "Lead and Zinc: Free World Supply and Demand (1972-1975), A Seminar from the Joint Meeting of Lead Industries Association and Zinc Institute, Inc.," April 6, 1972.

2. Private communication; Magma Copper Co.; August 1972.

3. Private communication; Bureau of Mines; December 1973.

4. "The Impact of Air Pollution Abatement on the Copper Industry," Fluo -Utah Engineers and Constructors, Inc., April 20, 1971.

5. "Applicability of Reduction to Sulfur Techniques to the Development of New Processes for Removing SO_2 from Flue Gases," Allied Chemical Industrial Chemicals Division (not dated).

6. Private communication.

7. a) "Commercial Experience with An SO_2 Recovery Process," B.H. Potter and T.L. Craig, Chemical Engineering Progress, August 1972, page 53.

   b) Federal Register, Vol. 37, No. 55, March 21, 1972.

8. EPA estimate.

9. EPA estimate to cover property taxes, insurance, and capital-related charges.

10. "Economic Impact of Anticipated Pollution Abatement Costs," Primary Copper Industry, Part 1, Executive Summary, A report to the Environmental Protection Agency, Arthur D. Little, Autumn 1972.

6.3 LEAD EXTRACTION

6.3.1 Lead Industry Economic Profile

The domestic lead industry experienced a surge of growth in both mine production and smelter production between 1968 and 1970. It was during this time that the development and utilization of the New Missouri Lead Belt was undertaken. This lead belt increased lead reserves in the United States by a considerable amount. Two new lead smelters were constructed in Missouri in 1968 to process the ores of the New Missouri Lead Belt. This brought the total of smelters in Missouri to three, and the national total to six. The current structure of the domestic lead smelting industry is as follows:

Company	Smelter Location	Refinery Location
St. Joe Minerals	Herculaneum, Mo.	Herculaneum, Mo.
Bunker Hill	Kellogg, Idaho	Kellogg, Idaho
Missouri Lead	Boss, Mo.	Boss, Mo.
ASARCO	Glover, Mo.	Glover, Mo.
ASARCO	El Paso, Texas	Omaha, Neb.
ASARCO	E. Helena, Mont.	----

Table 6-23 shows which firms have accounted for the growth in domestic pig lead production between 1968 and 1971. Overall production increased by almost 40% between 1968 and 1971 from 472,000 tons to 649,000 tons, due almost entirely to increases in production of Missouri lead. The lead industry as a whole was utilized at approximately 85% of capacity in 1971 even though two of the four primary producers were at 99% of capacity. The relatively low utilization ratios of ASARCO and Missouri Lead kept the industry average down at the 85% level.

The supply of pig lead in the United States from all sources is shown in Table 6-24. Again the recent utilization of the ore reserves of the New Missouri Lead Belt is seen. In 1968 the sum of pig lead imports and domestic production from foreign ores amounted to 34% of the total pig lead supplied. In 1971 this sum had been reduced to 19% of the total pig lead supplied. This decrease in foreign supplies was off-set by an increase in pig lead production from domestic ores from 26% to 40% of the total supplies.

Canada is the major foreign supplier of both ore and pig lead to the United States, as can be seen in Table 6-25. Other major sources of foreign ore are Peru and Honduras. Other major sources of foreign pig lead are Australia, Peru, and Mexico.

TABLE 6-23 DOMESTIC PIG LEAD PRODUCTION STATISTICS 1968-1971

Company	1968 Production (Short Tons)	1971 Production (Short Tons)	Estimated 1971 Capacity (Short Tons)	1971 % Utilization
St. Joe Minerals	176,000	222,000	225,000	99%
ASARCO	153,000	189,000	270,000	70%
Bunker Hill	124,000	129,000	130,000	99%
Missouri Lead	19,000	109,000	140,000	78%
Total	472,000	649,000	765,000	85%

SOURCE: Yearbook of the American Bureau of Metal Statistics for 1971, Issued June 1972.

TABLE 6-24 U.S. SUPPLY OF PIG LEAD 1968-1971

Source	1968 Short Tons	1968 %	1971 Short Tons	1971 %
Primary Production from Domestic Ores	349,000	26%	573,000	40%
Primary Production from Foreign Ores	118,000	9%	77,000	5%
Production from Secondary Sources	551,000	40%	597,000	41%
Imports of Pig Lead	345,000	25%	199,000	14%
Total	1,363,000	100%	1,446,000	100%

SOURCE: Minerals Yearbook, U.S. Bureau of Mines

TABLE 6-25 LEAD IMPORTS - 1971

Country	Ore, Matte, Base Bullion		Pigs and Bars	
	Short Tons	%	Short Tons	%
Canada	22,000	33%	57,000	29%
Mexico	--	--	30,000	15%
Columbia	--	--	36,000	18%
Peru	18,000	27%	--	--
Honduras	15,000	23%	--	--
South Africa	--	--	14,000	7%
Australia	9,000	14%	46,000	23%
Other	2,000	3%	13,000	7%
	66,000	100%	196,000	100%

SOURCE: Yearbook of the American Bureau of Metal Statistics for 1971, Issued June 1972.

Table 6-26 shows the primary uses of lead in this country. Lead consumption increased from 1,329,000 tons in 1968 to 1,432,000 tons in 1971, an overall increase of 8% for the three-year period. The use of lead in batteries, however, increased by 32% between 1968 and 1971 but was offset to a large degree by a reduction of lead used in pigments and also by a levelling-off of the use of lead in gasoline additives. It is expected that the use of lead in both pigments and gasoline additives will continue to decrease, and that the major area of consumption growth will be for use in batteries. The overall rate of growth in lead consumption for the United States is estimated at 2-3% per year between 1971 and 1975. It is altogether possible that this rate will decline after 1975 due to current EPA restrictions on the lead content of gasoline.

It is doubtful that any new smelters will be constructed in the United States in the near future since the domestic consumption of lead appears to be relatively stable for the near-term and could even possibly decline after 1975. Whereas it is true that some pig lead is imported, it is doubtful that the domestic lead industry would add additional capacity in order to try to capture the market share that is currently going to foreign imports. An addition to domestic capacity might lead to price reductions and reduced profitability for all producers, both domestic and foreign, particularly if future demand did decline.

Recent movements in the quoted price for pig lead are shown in Figure 6-11. Lead prices tend to move erratically and a spread of 1-2¢/lb of lead has historically been the normal difference between domestic prices and foreign prices. This differential covers freight and import duties.

TABLE 6-26 DOMESTIC LEAD CONSUMPTION, 1963-1971

Consumption	1968 Short Tons	1968 %	1971 Short Tons	1971 %
Batteries	514,000	39%	680,000	47%
Ammunition	82,000	6%	88,000	6%
Solder	74,000	5%	70,000	5%
Cable Covering	53,000	4%	53,000	4%
Other Metal Uses	193,000	15%	155,000	11%
Pigments	110,000	8%	81,000	6%
Gasoline Additives	262,000	20%	264,000	18%
Other	41,000	3%	41,000	3%
	1,329,000	100%	1,432,000	100%

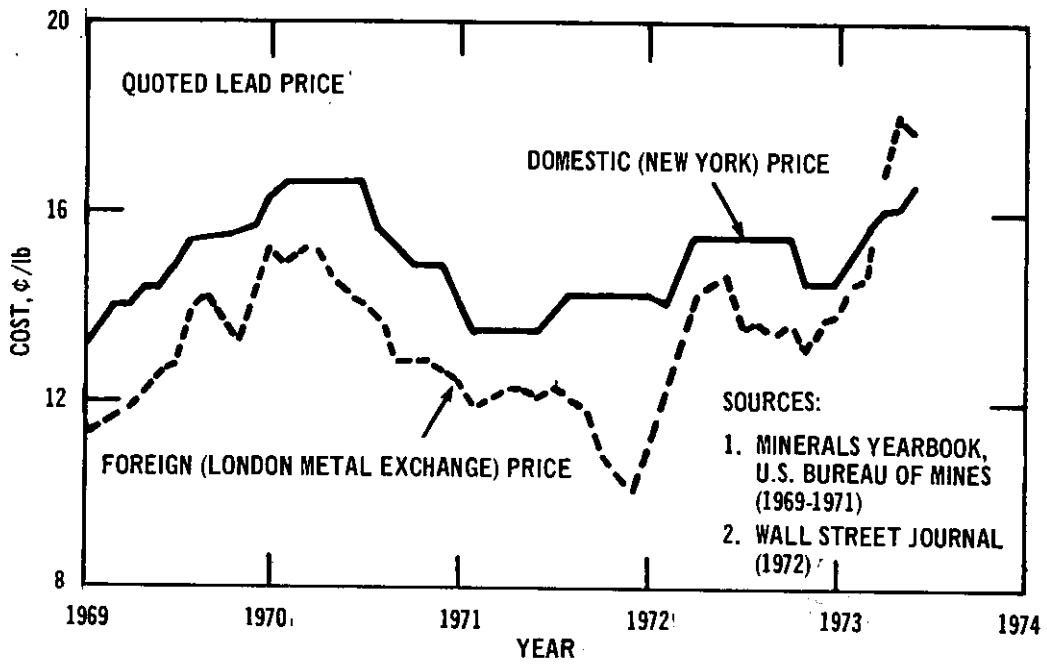

Figure 6-11. Monthly average quoted lead prices, 1969-1972.

6.3.2 Cost Analysis of Alternative Control Strategies

The cost of controlling sulfur dioxide and particulate emissions at a new source lead smelter is dependent upon both the smelting process that is used as well as the control level chosen for the process. Three smelting techniques were considered for use in a new source lead smelter. These techniques are as follows:

A. Recirculating Sintering Machine

This process utilizes an up-draft sintering machine with recirculation of the gases to achieve a single concentrated stream of sulfur dioxide. Reduction is carried out in a conventional blast furnace. The blast furnace emits a dilute stream of sulfur dioxide.

B. Non-Recirculating Sintering Machine

This process utilizes an up-draft sintering machine that does not recirculate the gases. The result is that two gas streams are emitted. The first stream is a relatively strong sulfur dioxide stream and contains approximately three-fourths of the sulfur dioxide liberated during the sintering process. The second gas stream is a weak sulfur dioxide stream and contains the remaining sulfur dioxide emitted during sintering. Reduction is carried out in a conventional blast furnace. The blast furnace emits a dilute stream of sulfur dioxide.

C. Electric Furnace and Converters

This process substitutes an electric furnace and a converter for the sintering machine and blast furnace. The electric furnace emits a more concentrated stream of sulfur dioxide than does either the recirculating sintering machine or the non-recirculating sintering machine. The converter also emits a concentrated stream of sulfur dioxide.

The control processes considered for control of sulfur dioxide and particulate emissions from new source lead smelters are reviewed below In general, sulfuric acid plants and elemental sulfur plants were used on strong sulfur dioxide streams, whereas dilute sulfur dioxide streams were treated by DMA units. The five control systems considered were:

A. Single-stage sulfuric acid plants

B. Dual-stage sulfuric acid plants

C. Elemental sulfur plants coupled with DMA units

D. Elemental sulfur plants coupled with Wellman scrubbing units

E. DMA units only

Various combinations of emission control processes were coupled with the three smelting techniques and are presented in Figures 6-12 through 6-14. Based on physical process parameters developed from material balance data, cost estimates were derived for these control combinations and total capital and operating costs for each case are summarized in Table 6-27. The costs associated with limestone neutralization of sulfuric acid were developed for those control alternatives incorporating acid plants. The capital and operating cost requirements for limestone neutralization are based on industry data and include the costs associated with the mining of limestone in addition to those associated with the neutralization of acid.[1] The operating cost requirements, however, assume that the limestone deposit is in close proximity to the smelter and thus reflect low transportation costs. Although limestone may be in plentiful supply, as indicated in discussions with the Bureau of Mines,[2] it is possible that transportation costs could increase the costs associated with limestone neutralization above those used in this analysis to some extent. However, even in those cases where specific smelters might be faced with high transportation costs for limestone, it is expected that the overall emission control costs including sulfuric acid neutralization would still be of the same order of magnitude as those developed for the various model smelters.

As a point of reference, with regard to the costs in Table 6-27, the capital requirements for a new source lead smelter with an annual capacity of 100,000 tons/yr of lead are on the order of $40MM-$50MM and the smelter operating costs, exclusive of raw material costs, are approximately 4-6¢/lb of lead. The smelter profit margin is generally quoted at 0.5¢/lb of lead.

Figure 6.-12 Model lead smelting facilities - sintering machine without gas recirculation options

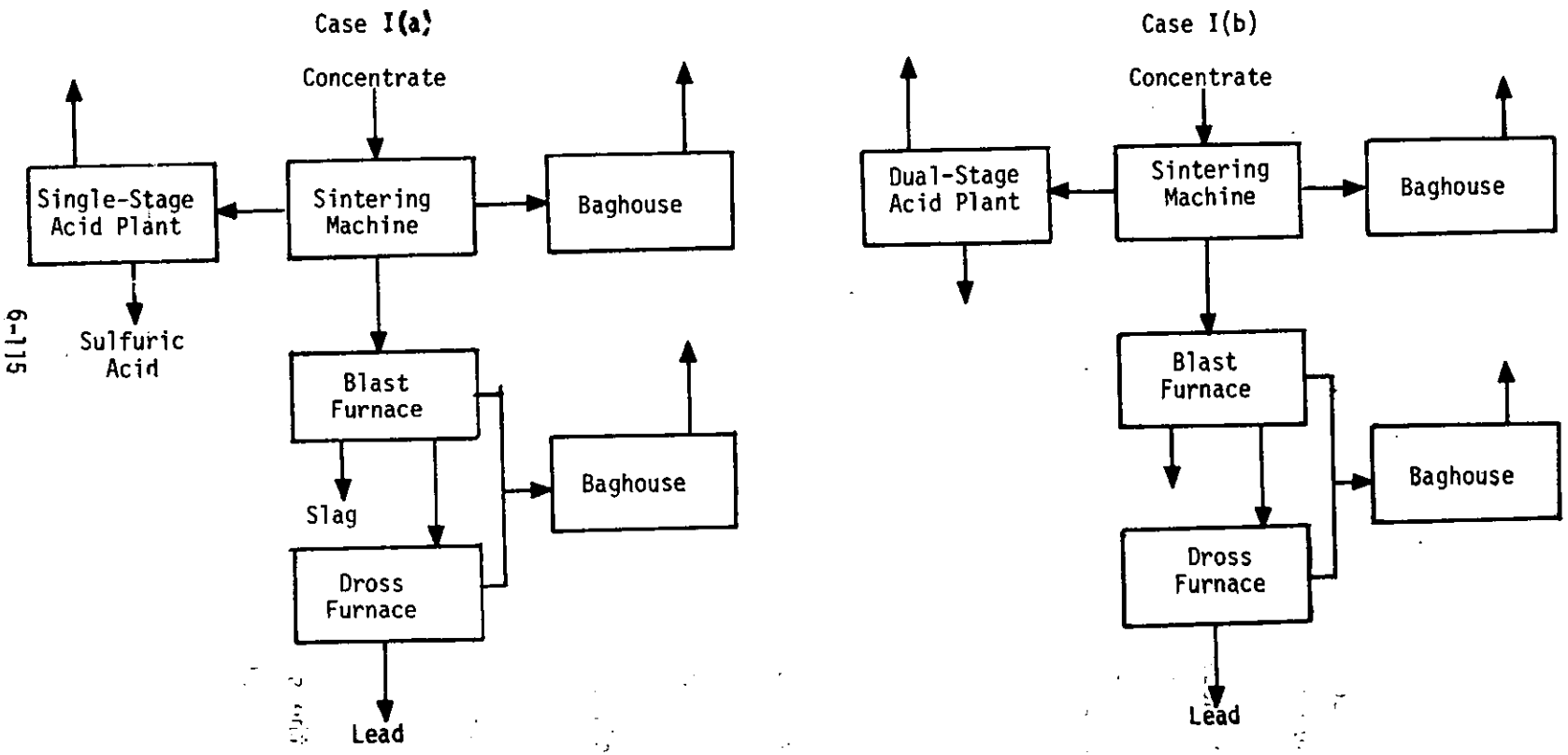

Figure 6-12 (Con't) Model lead smelting facilities - sintering machine without gas recirculation option

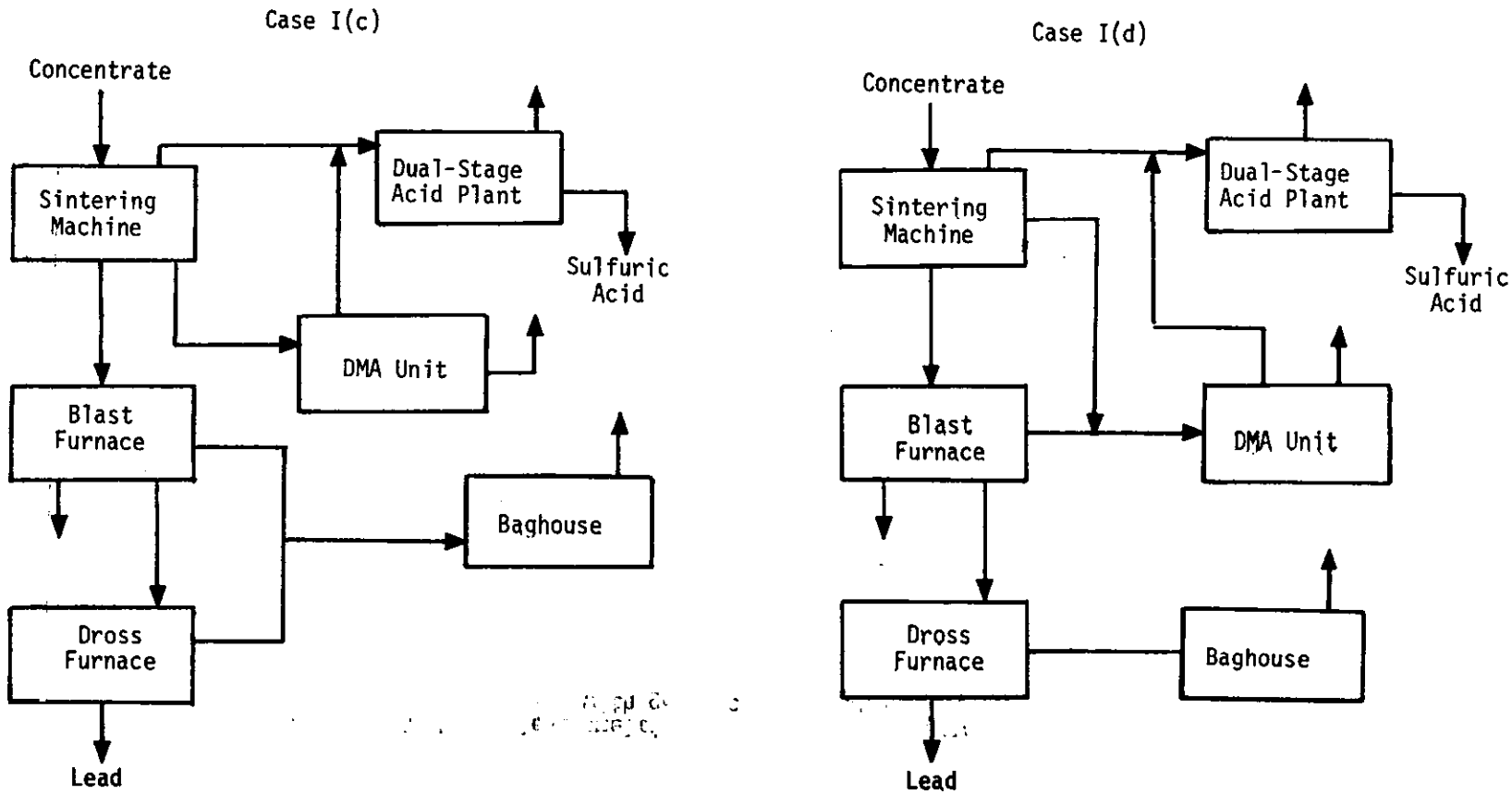

Figure 6-13 Model lead smelting facilities - sintering machine with gas recirculation option.

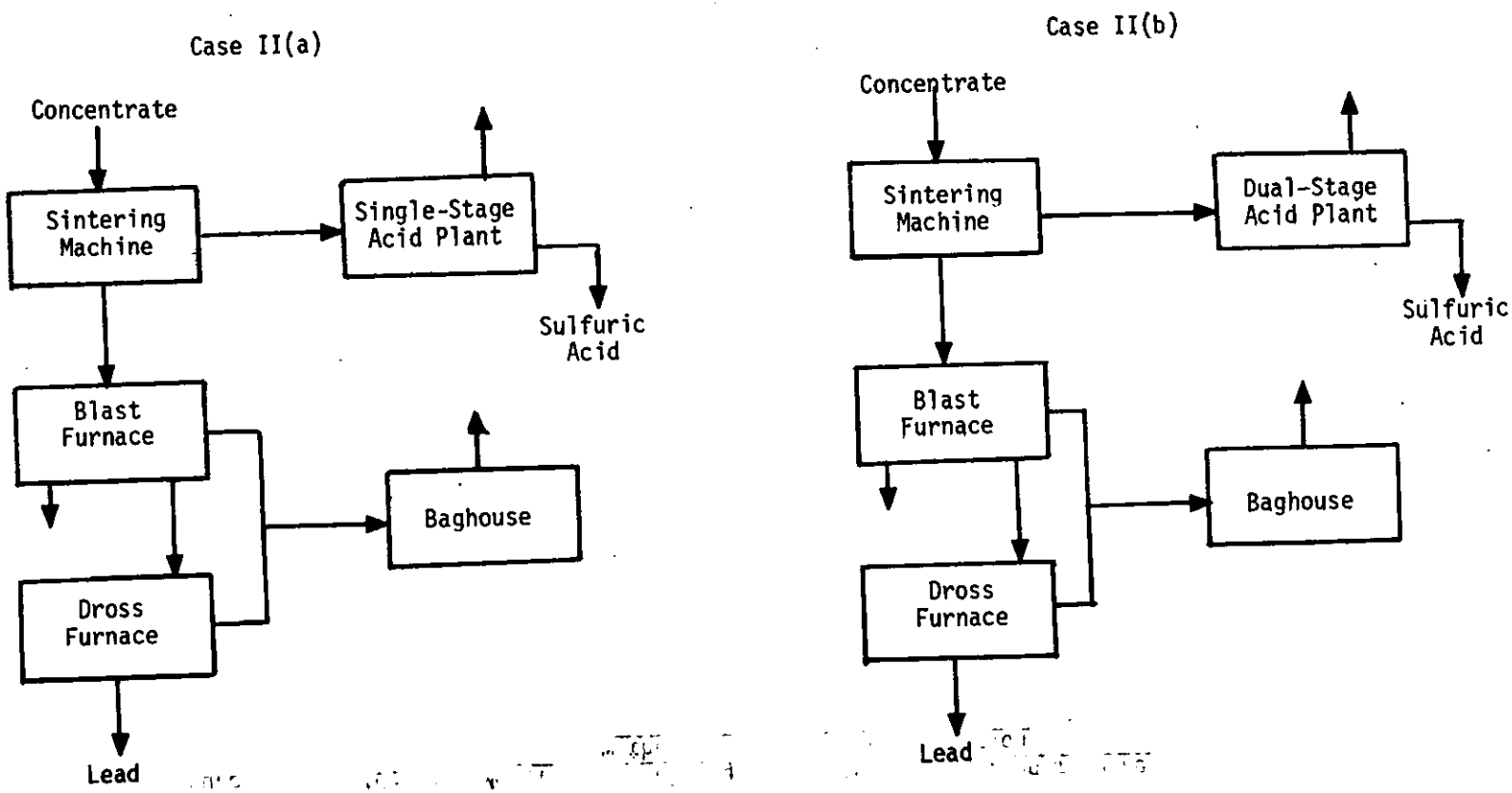

Figure 6-13 (Con't) Model lead smelting facilities - sintering machine with gas recirculation option.

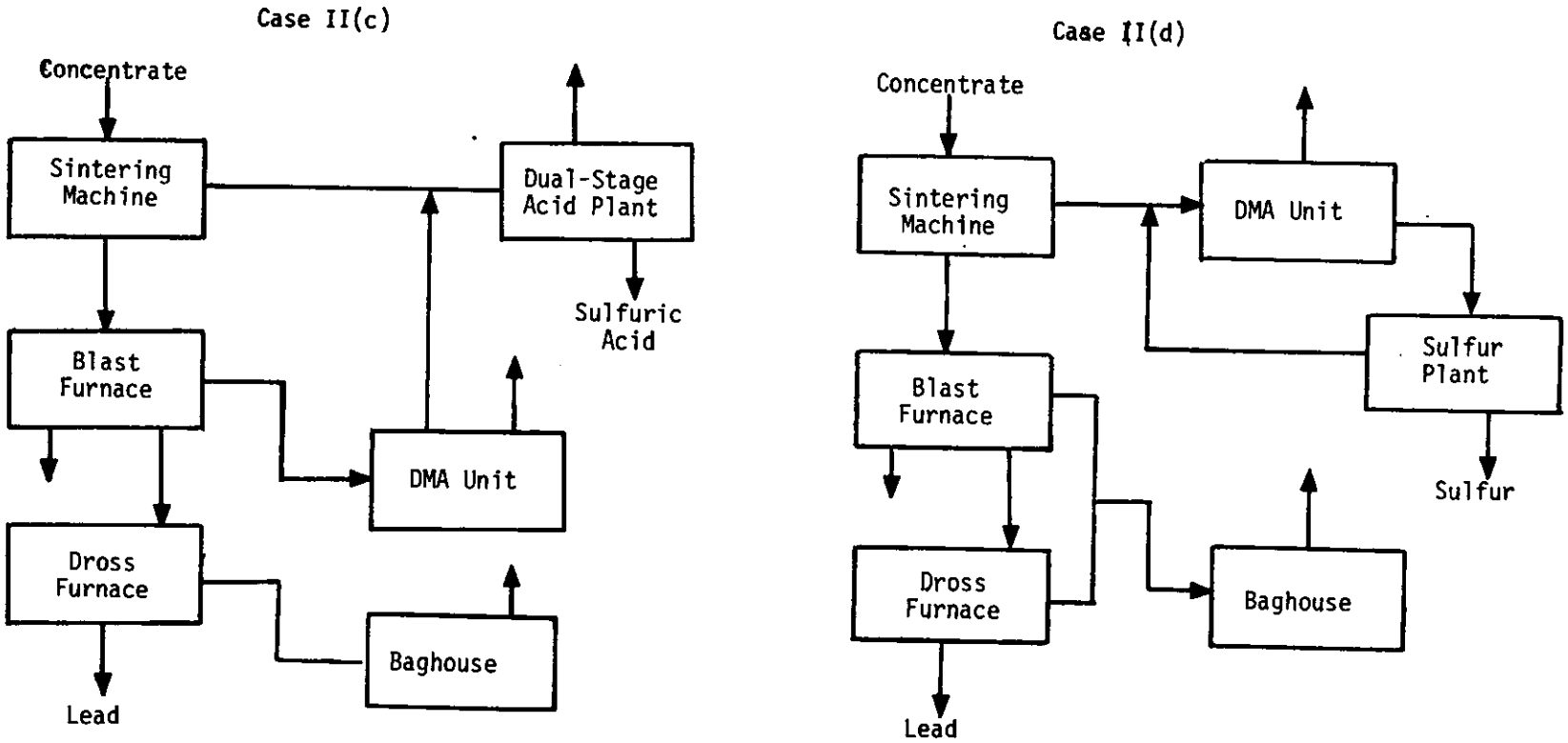

Figure 6-14 Model lead smelting facilities - electric furnace option

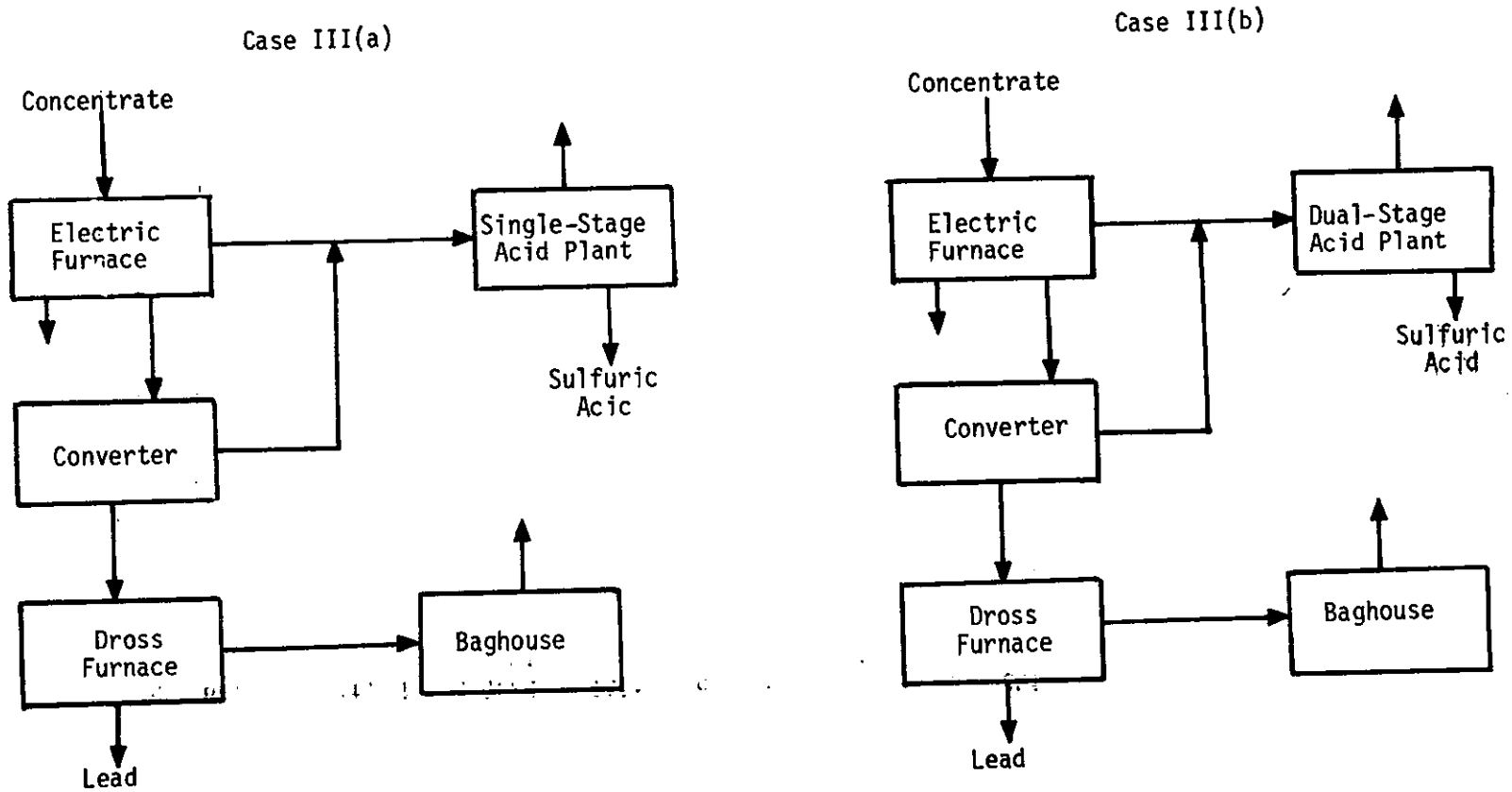

Figure 6-14 (Con't) Model lead smelting facilities - electric furnace option.

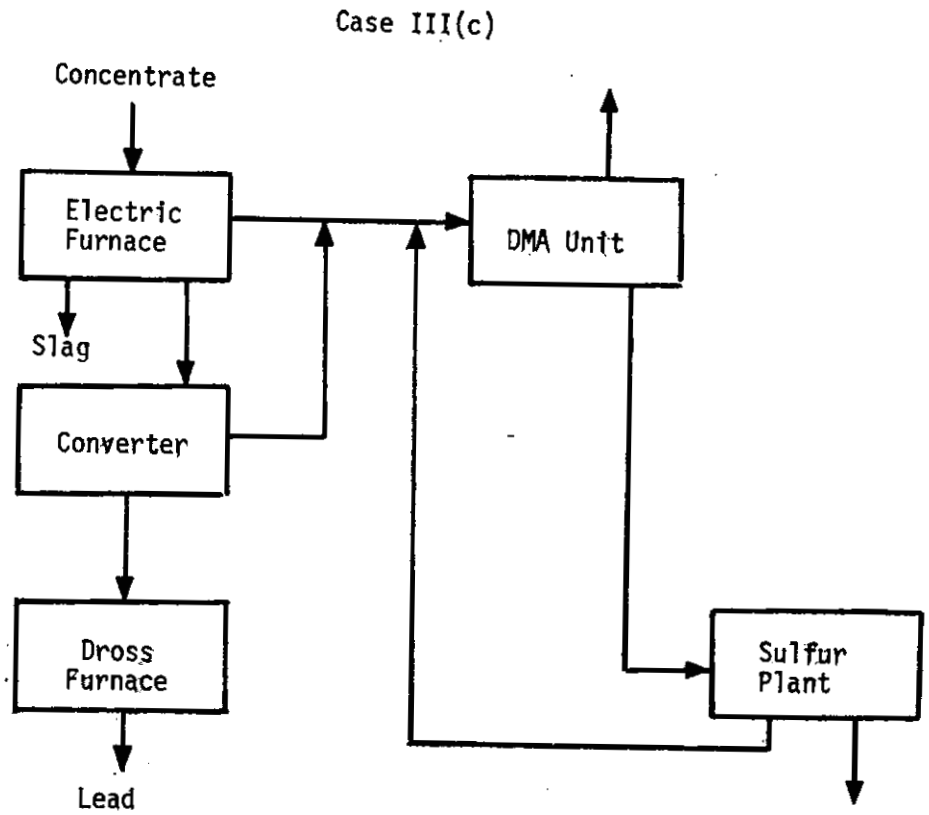

Table 6-27. CONTROL COSTS FOR MODEL LEAD SMELTERS

Model No.	Control Equipment	Capital Cost ($MM)	Capital Charges ($MM/yr)	Operating Cost ($MM/yr)	Total Cost ($MM/yr)	Overall Control (%)	Control Costs Cents/lb Lead	Control Costs Cents/lb SO_2	Incremental Control Costs Δ Cents/lb Lead	Incremental Control Costs Δ Cents/Δ lb SO_2
	Conventional Sintering Machine Smelting									
Ia	Single Stage Acid Plant	3.2	0.73	0.16	0.89	67.0 (1)	0.45 (2)	1.23 (2)	—	—
	Neutralization	1.9	0.33	0.17	0.50					
		5.1	1.06	0.33	1.39	67.0 (1)	0.70	1.92	—	—
Ib	Dual Stage Acid Plant	3.7	0.84	0.17	1.01	68.5 (1)	0.50 (2)	1.37 (2)	0.05 (3)	6.59 (3)
	Neutralization	1.9	0.33	0.17	0.50					
		5.6	1.17	0.34	1.51	68.5 (1)	0.76	2.04	0.06 (3)	6.59 (3)
Ic	DMA Scrubbing	20.1	4.63	0.52	5.15	89.0 (1)	3.08 (2)	6.90 (2)	2.58 (4)	23.4 (4)
	Dual Stage Acid Plant	3.6	0.84	0.17	1.01					
	Neutralization	2.3	0.40	0.24	0.64					
		26.0	5.87	0.93	6.80	89.0 (1)	3.40	7.61	2.64 (4)	24.0 (4)
Id	DMA Scrubbing	23.9	5.51	0.66	6.17	96.5 (1)	3.59 (2)	7.00 (2)	0.51 (5)	16.4 (5)
	Dual Stage Acid Plant	3.7	0.84	0.17	1.01					
	Neutralization	2.4	0.42	0.25	0.67					
		30.0	6.77	1.08	7.85	96.5 (1)	3.92	7.66	0.52 (5)	16.9 (5)
	Recirculating Sintering Machine Smelting									
IIa	Single Stage Acid Plant	4.9	1.12	0.21	1.33	88.5 (1)	0.66 (2)	1.39 (2)	—	—
	Neutralization	2.2	0.39	0.23	0.62					
		7.1	1.51	0.44	1.95	88.5 (1)	0.98	2.03	—	—
IIb	Dual Stage Acid Plant	5.6	1.27	0.23	1.50	91.0 (1)	0.75 (2)	1.52 (2)	0.09 (3)	6.01 (3)
	Neutralization	2.2	0.39	0.23	0.62					
		7.8	1.66	0.46	2.12	91.0 (1)	1.06	2.15	0.08 (3)	6.01 (3)

Table 6-27 (Con't) CONTROL COSTS FOR MODEL LEAD SMELTERS

Model No.	Control Equipment	Capital Cost ($MM)	Capital Charges ($MM/yr)	Operating Cost ($MM/yr)	Total Cost ($MM/yr)	Overall Control (%)	Control Costs Cents/lb Lead	Control Costs Cents/lb SO_2	Incremental Control Costs Δ Cents/lb Lead	Incremental Control Costs Δ Cents/Δ lb SO_2
IIc	DMA Scrubbing	8.3	1.90	0.17	2.07					
	Dual Stage Acid Plant	5.7	1.29	0.23	1.52	98.5 (1)	1.80 (2)	3.42 (2)	1.05 (6)	36.5 (6)
	Neutralization	2.4	0.43	0.26	0.69					
		16.4	3.62	0.66	4.28	98.5 (1)	2.14	4.08	1.08 (6)	37.7 (6)
IId	DMA Scrubbing	11.6	2.66	0.22	2.88					
	Sulfur Plant	2.1	0.45	0.24	0.69					
		13.7	3.11	0.46	3.57	91.0 (1)	1.79 (7)	3.62 (7)	—	—
	Electric Smelting									
IIIa	Single Stage Acid Plant	4.4	0.99	0.28	1.27	97.5 (1)	0.64 (2)	1.40 (2)		
	Neutralization	2.2	0.39	0.23	0.62				—	—
		6.6	1.38	0.51	1.89	97.5 (1)	0.95	2.08	—	—
IIIb	Dual Stage Acid Plant	5.0	1.14	0.30	1.44	99.5 (1)	0.72 (2)	1.55 (2)	0.08 (3)	8.50 (3)
	Neutralization	2.2	0.39	0.23	0.62					
		7.2	1.53	0.53	2.06	99.5 (1)	1.03	2.22	0.08 (3)	8.50 (3)
IIIc	DMA Scrubbing	10.7	2.47	0.32	2.79					
	Sulfur Plant	2.5	0.54	0.43	0.97					
		13.2	3.01	0.75	3.76	99.5 (1)	1.88 (7)	4.04 (7)	—	—

Notes:

(1) Overall control efficiencies calculated assuming no fugitive emissions, no down-time of control equipment and tail gases from single stage acid plants containing 2000 ppm SO_2, from dual stage acid plants containing 500 ppm SO_2 and from DMA scrubbing and/or wellman scrubbing systems containing 500 ppm SO_2.

(2) Acid sold at zero netback to smelter.

(3) Incremental control costs reflecting use of dual stage acid plant over single stage acid plant.

(4) Incremental control costs reflecting use of DMA scrubbing on weak gas stream from sintering machine over venting this stream directly to atmosphere.

(5) Incremental control costs reflecting use of DMA scrubbing on both weak gas stream from sintering machine and weak gas stream from blast furnace over DMA scrubbing of weak gas stream from sintering machine and venting blast furnace off-gases directly to atmosphere.

(6) Incremental control costs reflecting use of DMA scrubbing on weak gas stream from blast furnace over venting this stream directly to atmosphere.

(7) Sulfur sold at zero netback to smelter.

The overall control of sulfur dioxide emissions, expressed as a percent. achieved with each control alternative is also summarized in Table 6-27. It is to be noted, however, that these percentages are theoretical in nature and are based on the assumptions of total capture by exhaust hoods with no fugitive emissions and no downtime of the control device. Efficiencies are only approximate representations of what would be achieved in actual practice, and are for discussion or comparative purposes only.

Table 6-27 also presents control costs expressed in terms of cents per pound of lead produced and in terms of cents per pound of sulfur dioxide controlled. Incremental control costs expressed in terms of incremental cents per pound of lead produced and in terms of incremental cents per incremental pound of sulfur dioxide recovered are also summarized. The basis for these incremental costs is explained in the footnotes to the table.

The capital cost basis for the various control components is shown in Table 6-28. Costs were scaled to the appropriate capacity for each model smelter by use of the scale factors in Table 6-28. Below is an example of how the capital requirement of $7,131,000 for control of a recirculating sintering machine by means of a single-stage acid plant with acid neutralization (Table 6-27, Case II(a)) was derived:

Table 6-28

CAPITAL COSTS FOR SELECTED SO_2 CONTROL ALTERNATIVES

Control Alternative:	Single-Stage Sulfuric Acid Plant (Including Wet Cleaning and Acid Disposal)	Dual-Stage Sulfuric Acid Plant (Including Wet Cleaning and Acid Disposal)	Elemental Sulfur Plant (Methane Reduction)	Elemental Sulfur Plant (Methane Reduction)
Size:	500 TPD Acid	500 TPD Acid	180 TPD Sulfur	180 TPD Sulfur
Inlet SO_2 Concentration:	6% SO_2	6% SO_2	90% SO_2	15% SO_2
Capital Requirements (1973$)				
Gas Cleaning Capital	$1875M	$1875M	(Not Incl.)	(Not Incl.)
Process Capital	2515	3180	$2230M	$4635M
Disposal Capital	3575	3575	-0-	-0-
Other*	880	1010	445	925
Total Capital	$8845M	$9640M	$2675M	$5560M
Capital Scale Factor	.63	.63	.58	.58
Reference:	3	3	4	4

*Includes capital for site preparation (including hook-up of existing utilities) and contingencies.

Table 6-28 (Con't)

CAPITAL COSTS FOR SELECTED SO_2 CONTROL ALTERNATIVES

Control Alternative:	DMA Absorption	Wellman Scrubbing (Sulfite/Bisulfite)	Wet Cleaning Operation
Size:	50,000 SCFM	18 TPD Sulfur	50,000 SCFM
Inlet SO_2 Concentration:	5% SO_2	0.6% SO_2	Variable
Capital Requirements (1973$)			
Gas Cleaning Capital	(Not Incl.)	(Not Incl.)	$2095M
Process Capital	$9960M	$2345M	-0-
Disposal Capital	-0-	-0-	-0-
Other*	1990	470	420
Total Capital	$11950M	$2815M	$2515M
Capital Scale Factor	.70	.53	.68
Reference:	5	6	3

*Includes capital for site preparation (including hook-up of existing utilities) and contingencies.

Bases	Table 6-27	Table 6-27, case IIa
Total Gas Volume:	42,500 SCFM	33,000
% SO_2:	6%	5%
Acid Production:	500 TPD	306 TPD
Operating Days/Year:	330	240

Calculations

Gas Cleaning:	$\$1,875,000 \times \left(\frac{33,000}{42,500}\right)^{.63}$	=	$1,600,000
Acid Plant:	$\$2,515,000 \times \left(\frac{33,000}{42,500}\right)^{.63}$	=	2,179,000
Other:	20% of above	=	750,000
Neutralization:	$\$3,575,000 \times \left(\frac{306 \times 240}{500 \times 330}\right)^{.63}$	=	2,202,000
Total Process Capital:			$6,731,000
Additional Sintering Machine Capital			400,000
Total Control Capital			$7,131,000

Note that in the above calculation there is an allowance of $400,000 for the additional cost of a recirculating sintering machine over the cost of a non-recirculating sintering machine. This is due to the fact that a recirculating sintering machine of a given length has less capacity than a non-recirculating sintering machine.

In some control schemes only a baghouse for control of particulate emissions is utilized on the blast furnace. Also, in almost every control scheme only a baghouse is required for control of the dross furnace. The cost of these baghouses has not been incorporated into the calculations of pollution control costs because these baghouses are used for recovery of valuable by-products, not solely for pollution control. The baghouse, or its equivalent, is assumed to be incorporated into a new source lead smelter even if there were no emission control regulations requiring its use.

The capital requirements for the other cases were derived in a similar fashion.

Operating cost requirements for the various control components are shown in Table 6-29. These cost parameters are the basis for the calculations of annual control costs. The operating cost requirements for the control processes were adjusted in a manner similar to the adjustment of capital costs.

Table 6-29

OPERATING COSTS FOR SELECTED SO_2 CONTROL ALTERNATIVES

Control Alternative:		Single-Stage Sulfuric Acid Plant (Including Wet Cleaning and Acid Disposal)		Dual-Stage Sulfuric Acid Plant (Including Wet Cleaning and Acid Disposal)		Elemental Sulfur Plant (Methane Reduction)	
Size:		500 TPD Acid		500 TPD Acid		180 TPD Sulfur	
Inlet SO_2 Concentration:		6% SO_2		6% SO_2		90% SO_2	
Operating Parameter	Cost	Unit Ratio	Reference	Unit Ratio	Reference	Unit Ratio	Reference
1. Labor (Incl. Super.)	$5/man-hr	72 man-hr/day	3	72 man-hr/day	3	54 man-hr/day	4
2. Maintenance	---	6% x Capital	3	6% x Capital	3	5% x Capital	4
3. Cooling Water	$.03/1000 Gal	10 Gal/MSCF SO_2	3	10 Gal/MSCF SO_2	3	1800 Gal/Ton Sulfur	4
4. Process Water	$.50/1000 Gal	8.9 Gal/MSCF Total	3	8.9 Gal/MSCF Total	3		
5. Raw Water	$.25/1000 Gal						
6. Condensate	$.05/1000 Gal						
7. Steam	$.80/1000 Gal						
8. Power	$.01/KWH	.67 KWH/MSCF Total	3	.80 KWH/MSCF	7	40 KWH/Ton Sulfur	4
9. Methane	$.40/MCF					13.4 MCF/Ton Sulfur	4
10. Fuel	$.40/MM BTU						
11. Catalyst	$.13/lb					3.8 lb/Ton Sulfur	4
12. DMA	$.26/lb						
13. H_2SO_4	$15/Ton						
14. Soda Ash	$35/Ton						
15. Caustic Soda	$80/Ton						
16. Limestone	$5/Ton						
17. Acid Disposal: Direct		$3.10/Ton Acid	5	$3.10/Ton Acid	5		
18. Acid Disposal: Capital-Related		18% x Neut. Capital	5	18% x Neut. Capital	5		
19. Depreciation	Linear	15 years	7	15 years	7	15 years	3
20. Capital Charges	---	10% x Capital	8	10% x Capital	8	10% x Capital	2

Table 6-29 (Con't)

OPERATING COSTS FOR SELECTED SO_2 CONTROL ALTERNATIVES

Control Alternative:	Elemental Sulfur Plant (Methane Reduction)		DMA Absorption		Wellman Scrubbing (Sulfite/Bisulfite)	
Size:	180 TPD Sulfur		50,000 SCFM		18 TPD Sulfur	
Inlet SO_2 Concentration:	15% SO_2		5% SO_2		0.6% SO_2	
Operating Parameter	Unit Ratio	Reference	Unit Ratio	Reference	Unit Ratio	Reference
1. Labor (Incl. Super.)	54 Man-Hr/Day	4	24 Man-Hr/Day	3	56 Man-Hr/Day	5
2. Maintenance	5% x Capital	4	6% x Capital	3	6% x Capital	5
3. Cooling Water	3600 Gal/Ton Sulfur	4				
4. Process Water	860 Gal/Ton Sulfur	4				
5. Raw Water						
6. Condensate						
7. Steam			34.5 Gal/MSCF Total			
8. Power	181 KWH/Ton Sulfur	4	4.9 lb/MSCF Total	3	21,000 Lb/Ton Sulfur	5
9. Methane	18.4 MCF/Ton Sulfur	4	.41 KWH/MSCF Total	3	310 KWH/Ton Sulfur	5
10. Fuel						
11. Catalyst	3.8 lb/Ton Sulfur	4				
12. DMA			.0042 lb/MSCF Total	3		
13. H_2SO_4			.1540 lb/MSCF Total	3		
14. Soda Ash			.1350 lb/MSCF Total	3		
15. Caustic Soda						
16. Limestone					144 lb/Ton Sulfur	5
17. Acid Disposal: Direct						
18. Acid Disposal: Capital-Related						
19. Depreciation	15 years	7	15 years	7	15 years	3
20. Capital Charges	10% x Capital	8	10% x Capital	8	10% x Capital	2

Table 6-29 (Con't)

OPERATING COSTS FOR SELECTED SO_2 CONTROL ALTERNATIVES

Control Alternative:	Wet Cleaning Operation	
Size:	50,000 SCFM	
Inlet SO_2 Concentration:	Variable	
Operating Parameter	**Unit Ratio**	**Reference**
1. Labor (incl. Super.)	24 Man-Hr/Day	3
2. Maintenance	8% x Capital	3
3. Cooling Water		
4. Process Water		
5. Raw Water	8.9 Gal/MSCF Total	3
6. Condensate		
7. Steam		
8. Power	.107 KWH/MSCF Total	3
9. Methane		
10. Fuel		
11. Catalyst		
12. DMA		
13. H_2SO_4		
14. Soda Ash		
15. Caustic Soda		
16. Limestone		
17. Acid Disposal: Direct		
18. Acid Disposal: Capital-Related		
19. Depreciation	15 years	7
20. Capital Charges	10% x Capital	8

Several factors should be kept in mind when analyzing the results presented in Table 6-27. The first is that the control costs have been calculated on the basis that the smelter is a grass-roots lead smelter. The cost to install and operate comparable control equipment in a modified existing smelter would be greater than in a grass-roots lead smelter. It is conceivable that the installed capital costs for the same control equipment could be as much as twice as much in a modified smelter as they would be in a grass-roots smelter. Operating costs would not increase as much, but depreciation and other capital-related charges would increase proportionally with the increased capital requirements.

Another fact to consider is that the control costs shown in Table 6-27 will vary with both the amount of sulfur in the concentrate and the capacity of the smelter. Cases I and II shown in Table 6-27 are based upon a model smelter producing 100,000 tons per year of lead metal from a concentrate containing 55% lead and 16% sulfur, and Case III is based on a smelter producing 100,000 tons per year of lead metal from a concentrate containing 65% lead and 16% sulfur. The 100,000 ton-per-year capacity is typical of most existing domestic lead smelters and is in agreement with the recent industry construction. The concentrate analyses are assumed to be representative of the concentrate processed at a new source lead smelter utilizing these production techniques. However, it is possible that variations in this analysis could occur and a smelter that processes ores higher in sulfur content relative to the ores processed by the model smelter will have control costs greater than what is shown for the model smelter. For example, a 100,000 ton-per-year smelter that utilizes a recirculating sintering machine to process concentrates containing 55% lead and 16% sulfur and uses a single-stage acid plant without neutralization for control of the sintering machine strong stream will incur capital costs of approximately $4.9MM and annualized costs of 0.66¢/lb of lead (refer to Table 6-27, Case IIa). If the sulfur content of the concentrate were to increase to 20% and lead analysis remained unchanged at 55%, the capital costs would increase from $4.9MM to $5.6MM and the annualized control costs would increase from 0.66¢/lb to 0.75¢/lb of lead. Of course, comparable savings would be realized if the sulfur content were to

decrease relative to the lead analysis. It is expected that, on the average, the variations in sulfur content will approximate the model smelter analysis, but the possibility does remain that a new source lead smelter could have greater (or less) control costs than are shown in the attached Tables.

Another factor to keep in mind when examining these tables is the assumptions regarding the treatment or sale of the by-products produced by the various pollution control alternatives. In Table 6-27 there are shown two basic alternatives dealing with disposition of the sulfuric acid that is produced by either a single-stage or a dual-stage acid plant. The first alternative is that of selling the acid at zero netback to the production plant. This alternative assumes that the price paid to the producer for the acid is equal to the producer's cost of shipping the acid to the purchaser. The second basic alternative dealing with disposition of the acid is that of neutralization. In this alternative the acid is first neutralized and then disposed of in lined ponds so that no water pollution problems are presented. With this alternative the control cost is equal to the production cost of the acid plus the cost of neutralization and disposal. With regard to the production of sulfur, the only alternative presented is that of sale of the sulfur at zero netback. In this case the cost of control is equal to the production cost of the sulfur. To fully illustrate this factor of by-product disposal, Table 6-30 summarizes the impact of various disposal options for a new source smelter that utilizes a recirculating sintering machine for sulfur elimination. Control of emissions is accomplished by either a dual-stage acid plant or an elemental sulfur plant. The result for other smelter processes and control systems would be comparable.

As can be seen, the method of disposition of the by-products makes a considerable difference in the final control cost. The smelter operator who is able to sell his acid, even at zero netback or a slight loss, is in a better position that the producer who has to neutralize his acid. It would require a sales price of approximately $15/ton for the acid in order to fully recover pollution control costs in this particular case of a dual-stage acid plant controlling the sintering machine strong sulfur dioxide stream.

Table 6-30 Impact of Disposal Options

Option	Capital Requirement ($MM)	Annualized Control Cost (¢/lb of lead)
1. Produce acid and sell at $5/ton net to plant	5.0	0.54
2. Produce acid and sell at zero netback to plant	5.0	0.72
3. Produce acid and neutralize	7.2	1.03
4. Produce acid and sell at loss of $5/ton net to plant	5.0	0.90
5. Produce sulfur and sell at $15/ton net to plant	13.2	1.70
6. Produce sulfur and sell at zero netback	13.2	1.88
7. Produce sulfur and sell at net loss of $15/ton net to plant	13.2	2.06

A smelter operator probably would not produce sulfur unless he was able to receive a very high price for his sulfur production. It would require a sulfur price of approximately $85/ton in order to be equivalent to the annual control costs of 1.03¢/lb of lead resulting from the option of neutralizing the total sulfuric acid production. Not only is sulfur manufacture more costly than acid neutralization, but the capital requirement is $6.0MM more than the capital required for acid production and neutralization.

A brief discussion of each control alternative summarized in Table 6-27 and represented schematically in Figures 6-12 through 6-14 follows:

Case I(a)

This model is typical of present smelter processing procedures and control techniques. The sintering machine is operated with a dual-stream configuration with a strong stream of 6.5% processed in a conventional single-stage acid plant; a weak stream of 0.5% SO_2 is ducted to a baghouse for particulate collection. The off-gas flowrate from the machine is 81,000 SCFM in the weak stream and 19,000 SCFM in the strong stream. Thus, the acid plant was sized to process a gas stream of 19,000 SCFM and 6.5% SO_2, producing 230 TPD of 100% H_2SO_4.

Case I(b)

This model is essentially the same as Case I(a) with the exception of the incorporation of a dual-stage acid plant rather than a single-stage acid plant, resulting in the production of 236 TPD of 100% H_2SO_4.

Case I(c)

Essentially the same as case I(b); however, weak-stream off-gases from the sintering machine are processed in DMA unit to produce 100% SO_2 which is combined with the off-gases of the strong stream. The dual-stage acid plant is thus sized to process a gas of 19,100 SCFM flowrate and 8.5% SO_2. The resulting acid production is 314 TPD of 100% H_2SO_4.

Case I(d)

In addition to controlling weak gases from the sintering machine, the weak gas from the blast furnace is ducted to the DMA unit. The resulting gas stream to the DMA unit is 110,000 SCFM flowrate and 5%

SO_2. The SO_2 collected in the DMA unit is ducted to a dual-stage acid plant resulting in a production rate of 343 TPD of 100 percent H_2SO_4.

Case II(a)

All off-gas from the sintering machine is ducted in a single stream to a single-stage acid plant. The off-gas flowrate is 33,000 SCFM at 5% SO_2. Thus the acid plant is sized to process a 33,000 SCFM gas flow resulting in a capacity of 306 TPD of 100 percent H_2SO_4.

Case II(b)

This model is essentially the same as Case II(a) with the exception of the incorporation of a dual-stage acid plant rather than a single-stage acid plant, resulting in the production of 315 TPD of 100 percent H_2SO_4.

Case II(c)

The weak off-gas 0.5% SO_2 from the blast furnace is scrubbed and concentrated in a DMA unit. The 100% SO_2 stream from the DMA unit is combined with the sinter machine gases and processed in a dual-stage acid plant resulting in the sizing of the acid plant to accommodate a gas stream of 34,000 SCFM and 5 percent SO_2. The resulting production is 347 TPD of 100 percent H_2SO_4.

Case II(d)

Off-gases from the sintering machine are ducted to a DMA unit where the SO_2 is scrubbed from the gas stream, concentrated and ducted to an elemental sulfur plant. Thus, the DMA unit is sized to accommodate a gas stream of 37,000 SCFM flowrate at 5% SO_2. The sulfur plant is sized to accommodate a SO_2 stream of 1800 SCFM SO_2 thereby producing 104 TPD of elemental sulfur. Sulfur oxide emissions from the sulfur plant are ducted back to the DMA unit.

Case III(a)

Off-gases from the electric furnace are ducted to a single-stage acid plant. In addition, during its blowing period the lead converter gases are combined with the electric furnace gases to produce a gas stream of 31,000 SCFM and 7% SO_2. Thus the acid plant is sized to process a gas stream with the above characteristics producing 219 TPD of 100 percent H_2SO_4.

Case III(b)

Essentially the same as case III(a) with the exception of the incorporation of a dual-stage plant rather than a single-stage acid plant, resulting in the production of 225 TPD of 100 percent H_2SO_4.

Case III(c)

Off-gases from the electric furnace and the converter with a maximum flowrate of 33,000 SCFM are ducted to a DMA unit. The off-gases are scrubbed and a maximum SCFM of 100% SO_2 is ducted to an elemental sulfur plant. Thus the DMA unit is sized to process a 33,000 SCFM gas flowrate and the elemental sulfur plant is sized to process a maximum flowrate of 2500 SCFM of 100% SO_2; 70 TPD of elemental sulfur is produced.

6.3.3 Impact of New Source Performance Standards

The prospect of future growth in the domestic primary lead industry by the addition of new smelting capacity appears remote. The industry as a whole is producing at less than capacity rates, and future growth in consumption appears slight. Due to these two factors any large additions to industry capacity seem improbable in the near future. A possibility does exist that expansions could occur at existing plants, thereby increasing industry capacity, but major growth via this route is unlikely. For the time being, at least, the domestic lead industry appears to be static with regard to major increases in capacity. This lack of growth means that the new source performance standards for lead smelters will have no short-term impact on the domestic primary lead industry.

The possibility always exists, of course, that future conditions in the lead industry could change and that a new lead smelter would be constructed. Given this assumption, it would then be expected that the new lead smelter would be built in Missouri, near the New Missouri Lead Belt. Since the Missouri standard for sulfur dioxide emissions is 500 ppm from new sources, this means that the Federal new source performance standard would have no incremental effect over the Missouri standard. If a new smelter was constructed in a state that did not have any limitations on sulfur dioxide emissions, then the total impact upon the industry would be solely due to the Federal new source performance standard. It can be seen that the incremental impact upon the domestic lead industry is a function of the existing standards in the state in which the smelter would be constructed. The Federal new source performance standard could have no impact in some states and significant impact in other states, depending upon the standards that apply in the individual states.

In the event that a new lead smelter was constructed, it is reasonable to assume that it would have a capacity of approximately 100,000 tons of pig lead per year. Since the proposed new source performance standards would preclude the use of a sintering machine without gas recirculation, this means that the new smelter would employ either recirculating sintering machine smelting or electric smelting. The additional capital requirements for control of sulfur dioxide emissions for these two processes, assuming that dual-stage acid plants without acid neutralization are used as the control equipment, would amount to $5.0-$5.6MM (refer to Table 6-27). Since a new lead smelter of 100,000 ton/year capacity would be expected to cost approximately $40-$50MM, this means that the emission control equipment adds 10-14% to the capital requirements. Annual operating costs are estimated to be approximately 0.72-0.75¢/lb of lead, or 2.9 - 3.1% of sales at a price level of 24.5 ¢/lb.

It is felt that the additional capital costs for emission control equipment could be absorbed by the smelter through a larger borrowing at the time the smelter is financed. The additional operating costs, however, would probably not be absorbed at the smelter due to the relatively low profit margins (on the order of 0.5¢/lb) that are believed to exist at the smelters. It is also unlikely that a new smelter could pass the additional operating costs forward to the market in the form of higher prices. Since lead is a commodity item, the market price is set by the action of the various competitors in the market, both domestic and foreign, as these competitors respond to the overall demand for lead. A single competitor cannot unilaterally increase his price. Passing forward of pollution control costs does not appear to be a viable possibility for the new lead smelter.

A mechanism does exist, however, whereby the annual costs of operating the emission control equipment can be absorbed. This is the mechanism of passing the control costs back to the mines. It is believed that a level of backward integration exists in the industry such that this mechanism would be facilitated. The net effect would be that individual mine profitability would decrease unless higher grade ore bodies were available to the mines. The net long-term effect would be that mine reserves would be decreased and the closing of marginal mines would be accelerated. In summary, it appears that annual pollution control costs of the magnitude shown above could be passed back to the mines without a severe disruption of traditional profitability requirements in the event that a new lead smelter was constructed.

Costs for control of air pollutants are not the only environmental costs being faced by the domestic lead industry. It has been estimated that capital requirements for the industry to comply with state water pollution regulations at existing mines and smelters would amount to $20MM. Annual costs for compliance with the water standards would amount to 0.40¢/lb of lead produced. A study by Arthur D. Little on the economic effect of pollution abatement costs in the lead industry stated that water pollution costs were more or less uniform within the industry and would not lead directly to any plant closings.[9] It can be inferred that these costs would not preclude entry to the domestic lead industry, either. Arthur D. Little notes, however, that water pollution control costs could increase dramatically if more stringent standards are required. Not specifically estimated are costs associated with OSHA or the Mine Safety Act. These costs are expected to be negligible.

REFERENCES FOR SECTION 6.3

1. Private communication; Magma Copper Co.; August 1972.

2. Private communication; Bureau of Mines; December 1973.

3. "The Impact of Air Pollution Abatement on the Copper Industry," Fluor-Utah Engineers and Constructors, Inc., April 20, 1971.

4. "Applicability of Reduction to Sulfur Techniques to the Development of New Processes for Removing SO_2 from Flue Gases," Allied Chemical Industrial Chemicals Division (not dated).

5. Private communication.

6. a) "Commercial Experience with An SO_2 Recovery Process," B.H. Potter and T.L. Craig, Chemical Engineering Progress, August 1972, page 53.

   b) Federal Register, Vol. 37, No. 55, March 21, 1972.

7. EPA estimate.

8. EPA estimate to cover property taxes, insurance, and capital-related charges.

9. "Economic Impact of Anticipated Pollution Abatement Costs"; Primary Copper Industry; Part 1, Executive Summary; A Report to the Environmental Protection Agency; Arthur D. Little; autumn 1972.

7. RATIONALE FOR THE PROPOSED STANDARDS

7.1 SELECTION OF SOURCE CATEGORIES

Primary copper, zinc, and lead smelters are among the largest individual sulfur dioxide emission sources. For example, the domestic smelting industries had the following emission rates as of mid-1973 from plants of average capacity even after partially controlling sulfur dioxide discharges:

1. Copper smelters - 550 tons SO_2/day, 33% control.
2. Zinc smelters - 75 tons SO_2/day, 68% control.
3. Lead smelters - 59 tons SO_2/day, 27% control.

Even though the twenty-nine domestic smelters constituted a relatively small total number of sources, they accounted for approximately 12 percent of total national sulfur dioxide emissions. In addition, these primary smelters discharged more than 35,000 tons/year of particulate matter.

For many years, smelters have been publicized as being among the nation's largest sources of air pollution. This partly resulted from incidents such as occurred at Trail, British Columbia, where smelter sulfur dioxide emissions (600 tons SO_2/day) were reported as the cause of plant injuries as far as 52 miles south of the smelter. Three zones of injury were delineated on the basis of the percentage injury to Ponderosa pine, Douglas fir, and forest shrubs: in Zone 1 there was 60 to 100% injury; in Zone 2, 30 to 60% injury; in Zone 3, 1 to 30% injury. Zone 1, in which injury was acute, extended about 30 miles south of the smelter in a river valley; Zone 3, at higher elevations, extended 52 miles south of the smelter and contained trees with relatively slight markings and trees

suffering from slow but progressive deterioration. Other cases have been reported in which sulfur dioxide emissions from smelters have deteriorated or suppressed the growth of trees, shrubs, crops, or other vegetation. In addition, the development of implementation plans for the States which contain smelters has further headlined the smelters as being very large sources of sulfur dioxide emissions which have not been well controlled.

All smelters will have to comply with some sulfur dioxide emission limit, promulgated by either a State or EPA, by 1975-1977 to provide for the attainment of the national ambient air quality standard for sulfur dioxide. Since the control of sulfur dioxide emissions at some smelters is currently minimal, it is expected that these smelters will have to achieve a substantial reduction in sulfur dioxide emissions. Recent developments in the smelting industry indicate that the stringency or anticipated stringency of the control requirements has led to industry consideration of newer smelting technologies which have not previously been applied in the United States and which are more susceptible to sulfur dioxide control. In addition to modifying and rebuilding to incorporate these more modern smelting processes, existing smelters have made plans to employ emission control systems that have not been widely applied domestically. However, since the State standards are primarily aimed toward the attainment of specified ambient air quality levels, the resulting smelter modifications need not necessarily reflect the use of best demonstrated technology in all cases. On the other hand, a new source performance standard

applicable to smelters would reflect the best emission control capabilities (considering cost) for new smelters. Since new source performance standards are applicable to new sources, they may in some cases reflect the use of new process technologies which are more susceptible to sulfur dioxide control than existing process technology.

It is expected that two new grass-roots copper smelters (excluding the Phelps Dodge smelter at Tyrone, New Mexico, which has already been announced) will be constructed in the United States by 1984. It is probable that two new zinc smelters will be put into operation in the period 1975-1977. The domestic lead industry is producing at less than capacity rates, and future growth in lead consumption appears slight. As a result, the prospect of future growth by the addition of new lead smelting capacity appears remote. Even though the growth potential of copper, zinc, and lead smelters is small in terms of total numbers of new sources, each new facility is a very large emitter and can contribute significantly to air pollution which causes or contributes to the endangerment of public health or welfare.

7.2 METHODOLOGY FOR DEVELOPING PROPOSED STANDARDS

EPA initiated development of the proposed standards by contacting domestic smelter operators and reviewing the technical and trade literature. Subsequently, EPA engineers carried out on-site inspections of processing and emission control equipment at all domestic primary copper, zinc, and lead smelters. EPA consulted with smelter operators during these visits and in joint EPA/American Mining Congress meetings concerning the development of emission standards. An evaluation of the information collected from the above sources led to the conclusions that:

1. All major process gas streams at each type of smelter should be considered for standards development, in most cases for sulfur dioxide emissions and in the remaining cases for particulate emissions.
2. The most difficult control problem would probably be the treatment of weak sulfur dioxide effluents from some smelting processes.
3. Some smelting processes, which are available and in use at foreign smelters, eliminate the generation of weak sulfur dioxide streams.
4. Some foreign smelters were controlling sulfur dioxide emissions with double-absorption sulfuric acid plants, which are more efficient than the single-absorption plants that were the only ones in domestic operation at that time.

It was also concluded that the emission control performance of single-absorption sulfuric acid plants operated at domestic smelters was not well characterized, particularly with regard to such smelting processes as copper converting which discharge widely fluctuating off-gas streams.

A limited EPA emission testing program at domestic smelter sites was carried out in May and June 1972. Tests of single-absorption sulfuric acid plants and fabric filters provided indications of the performance capabilities of the best domestic sulfur dioxide and particulate emission control technologies. EPA engineers then visited smelters in Europe and Japan to determine the feasibility of setting standards on the basis of double-absorption sulfuric acid plants for sulfur dioxide control and on the basis of the newer smelting technologies which largely eliminate weak sulfur dioxide effluents.

From October through December 1972 a continuous sulfur dioxide monitor recorded emissions from a domestic metallurgical single-absorption acid plant. These data were analyzed to determine the extent of fluctuations in sulfur dioxide emission concentrations and to develop methods that would account for these fluctuations in a sulfur dioxide emission standard.

Following the visits to smelters in Europe and Japan, EPA engineers drafted a technical report which evaluated the applicability of newer smelting process technologies to domestic operations. The primary purpose of this report was to present the position that

weak sulfur dioxide streams can be largely eliminated by the application of these smelting processes. This report was reviewed by the National Air Pollution Control Techniques Advisory Committee, the Federal Liaison Committee, and the American Mining Congress in meetings with EPA in November and December 1972. Subsequently, the draft report was revised based upon an evaluation of the numerous comments expressed during these meetings; it is incorporated into this document as Sections 3, 4 and 6.

Emission control systems are also discussed in the draft report cited above. Because no double-absorption sulfuric acid plants or weak-stream sulfur dioxide scrubbing systems were in operation at domestic smelters prior to late 1972, suitable quantitative data for the establishment of regulatory sulfur dioxide emission limits representative of best demonstrated technology were not available. Consequently, EPA solicited written comments on the expected performance capabilities of these systems from domestic sulfuric acid plant vendors, scrubbing system vendors, and scrubbing system researchers. In addition, EPA performed a detailed analysis of the continuous sulfur dioxide, single-absorption acid plant emission data noted above. This analysis showed that long-term averaging of emission concentrations is an effective method of masking fluctuations in emission concentrations and arriving at an emission limit related to acid plant vendor guarantees.

A double-absorption sulfuric acid plant was put into operation at the ASARCO copper smelter in El Paso, Texas, in late 1972. EPA

monitored sulfur dioxide emissions from this plant on a continuous basis during the period June-December 1973. A detailed analysis of the data from this test demonstrated again the effectiveness of long-term averaging in masking fluctuations in emission concentrations. The analysis also provided data on the effect of acid plant inlet sulfur dioxide concentration on sulfur dioxide emissions, and the portion of operating time during which alternative sulfur dioxide emission concentrations are exceeded.

The proposed standards described in this report were developed after considering numerous alternative smelting processes and ranges of emission control levels. These alternatives are presented in Section 6 of this report, where model copper, zinc, and lead smelters have been analyzed, and control costs have been presented for the various alternatives. The sulfur dioxide emission limitation contained in the proposed standards is intended to require the installation of double-absorption sulfuric acid plants, or other control systems which achieve an equivalent effluent stream concentration. The specific value of 650 ppm sulfur dioxide has been based upon monitored test data for the metallurgical double-absorption sulfuric acid plant at the ASARCO, El Paso, Texas, copper smelter, modified to account for the maximum expected inlet sulfur dioxide concentration produced by smelting processes and for acid plant catalyst deterioration. It is the judgment of the Administrator that the emission limit can also be met by the use of scrubbing systems on both strong and weak sulfur dioxide streams. This conclusion is primarily based upon

engineering evaluations of several systems, rather than upon emission data for smelter effluent streams treated by these systems.

The potential environmental effects of the proposed standards were investigated. Quantities of potential solid and sludge wastes resulting from the neutralization of sulfuric acid and the use of scrubbing systems were determined. A survey was carried out to identify those disposal methods which can minimize secondary pollution problems. The energy requirements of the various emission control systems that can be utilized to comply with the standards have been estimated and the impact of the standards on the energy requirements associated with the production of copper, zinc and lead analyzed. The results are discussed in Section 8.

The development of the proposed sulfur dioxide standards on the basis of continuous monitoring data has made it possible and desirable to base compliance on measurements by continuous monitors. Method 12 for demonstrating the performance of monitors required by the standards to be installed and operated by affected sources is included in the proposed standards.

7.3 SELECTION OF POLLUTANTS

In assessing the environmental impact of each of the processes for which standards are now being proposed, the quantities of pollutants emitted from existing smelters were considered. Emission testing and material balances indicated that significant amounts of sulfur dioxide or particulates are emitted from each of the selected affected facilities. Primary copper, zinc, and lead smelters are among the largest individual sulfur dioxide emission sources. For example, the domestic smelting industries have the high emission rates cited in Section 7.1 from plants of average capacity even after partially controlling sulfur dioxide discharges. In addition, twenty-nine domestic primary smelters discharge greater than 35,000 tons/year of particulate matter. Because of (1) the documented evidence that both sulfur dioxide and particulate matter have caused adverse health effects and adverse welfare effects,[1,2] (2) the large quantities of pollutants involved, and (3) the large increases in pollutant control that can be effected, standards to limit emissions of sulfur dioxide and particulate matter are proposed for copper, zinc, and lead smelting processes.

7.4 SELECTION OF AFFECTED FACILITIES

The copper, zinc, and lead smelting industries are dependent upon sulfur-bearing ore concentrates as the major raw materials. Eleven pyrometallurgical processes are used in various configurations to process these ore concentrates into copper, zinc, and lead. The basic principle of most of these pyrometallurgical smelting processes is that the various constituents can be separated by selective high-temperature chemical reactions such as the reaction of sulfur with oxygen to produce gaseous sulfur dioxide which is vented from the process. Additional impurities may either be evolved due to the high temperatures or entrained in the outlet gases. Because all of these pyrometallurgical processes can emit significant quantities of sulfur dioxide or particulate matter, the proposed standards apply to all eleven of these processes. Each type of processing equipment and its corresponding emission control equipment were evaluated in order to determine appropriate standards for particulate, sulfur dioxide and visible emissions.

The proposed standards do not apply to hydrometallurgical techniques, because hydrometallurgical processes do not emit significant quantities of sulfur dioxide or particulate matter.

7.5 DETERMINATION OF EMISSION LIMITS

7.5.1 Choice of Best Demonstrated Technology

Section 111 of the Clean Air Act requires the establishment of Federal standards of performance for new stationary sources which may contribute significantly to air pollution resulting in or contributing to the endangerment of public health or welfare. The term new source is defined as a stationary source the construction or modification of which is commenced after the proposal of regulations under section 111; modification means any physical change in, or change in the method of operation of, a source which increases the amount of any air pollutant emitted by such source or which results in the emission of any air pollutant not previously emitted. Such standards of performance are required, by the Act, to reflect the degree of emission limitation achievable through the application of the best system of emission reduction which has been determined to be adequately demonstrated, taking into account the cost of achieving such reduction. "Adequately demonstrated" does not mean that the technology must be in actual use somewhere nor that any existing source be able to meet the standards based on this technology. However, "adequately demonstrated" does imply that the control technology relied upon in setting a standard of performance can be made available, and will be effective to enable sources to comply with such standards by their effective date.

As discussed in Section 7.4, the proposed standards apply to all eleven copper, zinc, and lead pyrometallurgical processes because of the significant quantities of sulfur dioxide or particulate matter that can be emitted from these processes. However, the proposed standards do not apply to hydrometallurgical processes because hydrometallurgical processes do not emit significant quantities of sulfur dioxide or particulate matter. Although a limited number of smelters may construct hydrometallurgical processes rather than pyrometallurgical processes in order to take advantage of the smaller emission potential of hydrometallurgical processes, hydrometallurgical processes for production of copper, zinc, or lead have been applied commercially only to oxide ores or to ores consisting predominately of oxides with some sulfides present. To date, no hydrometallurgical process has been successfully commercialized for the treatment of copper, lead, or zinc sulfide ores, although processes are currently under development and the construction of one hydrometallurgical copper extraction facility has been announced. Thus, in the judgment of the Administrator, it has not been demonstrated that hydrometallurgical processes are of sufficiently broad applicability to justify basing the proposed standards solely on these processes. Accordingly, the following sections discuss the rationale of developing standards for pyrometallurgical processes only.

7.5.1.1 Sulfur Dioxide Emissions in Strong Streams

For the purposes of this discussion, "strong sulfur dioxide streams" refers to streams which contain more than 3.5-4.0% sulfur dioxide. The

characterization of effluents in terms of these sulfur dioxide concentration levels depends upon the fact that conventional sulfuric acid plants of single-absorption and double-absorption design are normally economically feasible only on streams more concentrated than 3.5% and 4.0% sulfur dioxide, respectively.

Single-absorption sulfuric acid plants have been utilized at domestic smelters for a number of years, but double-absorption plants have only recently been applied (late 1972). Dimethylaniline (DMA) scrubbing systems and ammonia scrubbing systems are also used on smelters' strong sulfur dioxide streams and thus, as discussed in Section 4.3, are considered to be adequately demonstrated sulfur dioxide control technologies for smelters' strong sulfur dioxide streams. Each of these systems is capable of high-efficiency (greater than 95%) control of sulfur dioxide emissions. Elemental sulfur recovery plants can also be used to control sulfur dioxide emissions, but the tail gas stream must be further processed by a scrubbing system, such as DMA or sodium sulfite-bisulfite, in order to reduce the sulfur dioxide emission concentrations to the levels attainable by sulfuric acid plants. In addition, streams which contain less than 10% sulfur dioxide and greater than 5% oxygen cannot be processed directly in elemental sulfur recovery plants; rather, the sulfur dioxide must first be concentrated by a scrubbing system, such as DMA. Each of these sulfur dioxide control systems provides high-efficiency particulate control since proper operation requires that particulate matter be removed to a degree consistent with best available particulate control technology prior to sulfur dioxide removal. Thus, the choice of best control technology for

strong sulfur dioxide streams is primarily a choice of the best sulfur dioxide removal capabilities, considering cost of such removal, for these systems.

From the viewpoint of emission control, the primary distinction between single-absorption acid plants and the other sulfur dioxide control systems (double-absorption acid plants and elemental sulfur plants with tail-gas scrubbing) is that the latter systems are capable of reducing emission rates by 70-80% of those from single-absorption sulfuric acid plants. Consequently, these other control systems can be viewed as providing a small incremental increase in sulfur dioxide control efficiency from approximately 97 to 99.5%.

The capital investment and unit emission control costs which are calculated for model smelters in Section 6 increase in the following order: (1) single-absorption sulfuric acid plants, (2) double-absorption sulfuric acid plants, (3) scrubbing systems, and (4) elemental sulfur plants with tail-gas scrubbing. The capital investment for double-absorption sulfuric acid plants is about 20% greater than that for single-absorption sulfuric acid plants, but the unit emission control costs are considered to be acceptable in both cases. For example, Table 6-12 shows that typical control costs for single-absorption and double-absorption sulfuric acid plant control of an electric furnace/converter copper smelter are, respectively, 1.68 and 1.87 cents per pound of copper produced, assuming acid is sold at zero netback to the smelter. In terms of control costs referred to the quantity of sulfur dioxide removed, the costs

are 0.72 and 0.79 cents per pound, respectively, of sulfur dioxide controlled. As discussed in Section 6.1, these costs are not unreasonable compared to the average cost of emission control of about 3 cents per pound of copper which will be experienced at existing domestic copper smelters to comply with the sulfur dioxide national ambient air quality standard. Similarly for zinc smelters, Table 6-19 shows that the costs of single-absorption and double-absorption sulfuric acid plant control of the zinc roaster are 0.70 and 0.78 cents per pound of zinc, respectively, assuming acid is sold at zero netback to the smelter. Likewise for lead smelters, Table 6-27 shows that the costs of single-absorption and double-absorption sulfuric acid plant control of strong sulfur dioxide streams from lead sintering machines are 0.66 and 0.75 cents per pound of lead, respectively, assuming acid is sold at zero netback to the smelter. As discussed in Sections 6.2 and 6.3, the costs of double-absorption sulfuric acid plant control of these strong stream effluents are not unreasonable for zinc and lead smelters.

Table 6-12 also shows that, for approximately the same overall level of sulfur dioxide control, the unit emission control costs for DMA scrubbing and DMA scrubbing combined with elemental sulfur recovery are 3.6 and 4.8 cents per pound of copper, respectively, for control of an electric furnace/converter copper smelter as compared to 1.9 cents per pound of copper for double-absorption acid plant control. Similar results are obtained for lead and zinc smelters. Thus, the choice of

best demonstrated technology (considering cost) is limited to single-absorption and double-absorption sulfuric acid plants because the other control systems have increased costs with no additional control of sulfur dioxide emissions. However, this limitation does not restrict a smelter from applying other control systems where special circumstances warrant.

The smelting industry considers double-absorption acid plants to be the best demonstrated control systems, and a trend toward the use of double-absorption rather than single-absorption metallurgical sulfuric acid plants has already been established by the startup of the first two domestic double-absorption acid plants within the past year and by the initiation of construction or the announced plans for construction of three other double-absorption acid plants. In addition, some State regulations already require the use of double-absorption acid plants. Thus, considering the current trend toward double-absorption acid plants, the additional 70-80% reduction in sulfur dioxide emissions discharged from double-absorption acid plants over single-absorption acid plants, and the EPA analyses of emission control costs of double-absorption acid plants which indicate that the costs are reasonable, the Administrator has determined that emission limits should reflect the sulfur dioxide control capabilities of double-absorption sulfuric acid plants.

7.5.1.2 Sulfur Dioxide Emissions in Weak Streams

For the purpose of this discussion, "weak sulfur dioxide streams" refers to streams which contain less than 3.5 - 4.0% sulfur dioxide. Each category of primary nonferrous smelters subject to the proposed standards involves at least one weak sulfur dioxide stream. These weak streams are discharged from reverberatory smelting furnaces at copper smelters, sintering machines at zinc smelters, and sintering machines and blast furnaces at lead smelters. With one exception, all fifteen domestic copper smelters now operate the reverberatory type of furnace. Also, three of the six domestic zinc smelters utilize sintering machines which discharge weak sulfur dioxide streams, and all six domestic lead smelters operate sintering machines and blast furnaces which discharge weak sulfur dioxide streams. Section 4.3 concludes that scrubbing systems have been commercially demonstrated on a variety of non-smelter weak sulfur dioxide streams and also on some smelter weak sulfur dioxide streams. For example, scrubbing systems are operating on a 1.5 to 2.5% sulfur dioxide stream discharged from a lead sintering machine, 1.5% sulfur dioxide streams from Claus sulfur recovery plants, 3000-5000 ppm sulfur dioxide tail gas streams from sulfuric acid plants, 2000-6000 ppm sulfur dioxide streams from blast furnaces at secondary lead smelters, and various low sulfur dioxide concentration streams from power plant steam generators. Although no copper reverberatory furnace or zinc sintering machine

weak sulfur dioxide stream has yet been controlled on a long-term basis, a DMA scrubbing unit has been put into operation to control the weak sulfur dioxide stream from a reverberatory furnace at the Phelps Dodge copper smelter at Ajo, Arizona.

The most significant factor limiting the application of scrubbing systems to weak sulfur dioxide streams within the primary copper, zinc and lead smelting industry is the cost. Sulfur dioxide control of the weak sulfur dioxide streams from copper reverberatory furnaces, lead or zinc sintering machines, or lead blast furnaces results in emission control costs which are considered unreasonable in most cases. For example, Table 6-12 shows that the cost of controlling a weak sulfur dioxide stream from a copper reverberatory furnace with DMA scrubbing, while controlling the strong sulfur dioxide stream from the converter with a double-absorption sulfuric acid plant, would be 4.4 cents per pound of copper. This cost is significantly greater than the 3 cents per pound of copper cost which has been determined to be the maximum increase that would allow domestic copper smelters to remain competitive in the world market. Similarly for zinc smelting, Table 6-19 shows that the cost of controlling the weak sulfur dioxide stream of a zinc sintering machine with DMA scrubbing, while controlling the strong sulfur dioxide stream of a zinc roaster with a double-absorption sulfuric acid plant, would be 3.2 cents per pound of zinc, assuming the acid is sold at zero netback to the smelter. Further, for lead smelting Table 6-27 shows that

the cost of controlling the weak sulfur dioxide streams of a lead sintering machine and blast furnace with DMA scrubbing, while controlling the remaining strong sulfur dioxide stream from the sintering machine by a double-absorption acid plant, would be 3.6 cents per pound of lead, assuming the acid is sold at zero netback to the smelter. As discussed in Sections 6.2 and 6.3, respectively, these costs are considered unreasonable in most cases for zinc and lead smelters. Accordingly, EPA investigated whether there are process changes which can be utilized to eliminate the generation of weak sulfur dioxide streams at newly constructed smelters.

A substantial portion of the development program for the proposed standards focused on identifying those situations where weak sulfur dioxide streams can be eliminated by process changes. It has been determined that two copper smelting processes (electric furnace smelting and flash smelting) which discharge only strong sulfur dioxide streams are demonstrated smelting technologies and that together they are applicable to the full range of domestic copper smelting operations. One electric copper smelting furnace is already in use in the U.S., and construction of a second electric furnace has recently been completed. In addition, the construction of a third electric furnace has been announced. The construction of a flash furnace is currently underway. The proposed standards are based primarily upon the application of these

smelting processes. The alternative of structuring the standard to allow the use of new conventional reverberatory smelting furnaces would essentially mean that sulfur dioxide emissions from smelting furnaces should not be controlled because of the unreasonable costs of presently available scrubbing systems for weak sulfur dioxide streams within this industry. The difference in control levels achieved would be large. For example, Table 6-12 shows calculated sulfur dioxide control levels of 99.5 percent for an electric furnace smelter which meets the proposed standard versus 70-80 percent for a reverberatory furnace-converter smelter or a roaster-reverberatory furnace-converter smelter, which emits an uncontrolled weak sulfur dioxide stream from the furnace while applying a double-absorption sulfuric acid plant to the streams of the converters or the roasters and converters. The corresponding approximate sulfur dioxide emission rates are 3, 180, and 120 tons per day, respectively.

Although the proposed standard for copper smelters is based primarily upon the use of electric or flash smelting processes, the proposed standard can be achieved using the reverberatory furnace process by blending the reverberatory furnace gases with converter or converter and roaster gases and treating the combined gas stream with a double-absorption sulfuric acid plant. A smelter in Yugoslavia is currently changing its process so that the gases from the reverberatory furnace will be blended with the gases from roasters and converters. The combined gas stream will be a strong sulfur

dioxide stream that will be treated with sulfuric acid plants. The limitations of this technique are similar to those of flash furnaces but the technique does offer smelters some flexibility.

The Administrator recognizes that copper smelters have traditionally increased production by incremental expansions of existing facilities, in addition to constructing new grass-roots smelters. Some incremental expansions would be classified as modifications under section 111 of the Act and would be subject to new source performance standards. Consequently, in developing the proposed standards the impact on modified smelters has been considered. The primary difficulty in accommodating both grass-roots copper smelters and modified existing copper smelters within a single sulfur dioxide emission limitation is the control of increased emissions from modified reverberatory furnaces. As stated above, the costs of controlling weak sulfur dioxide streams from reverberatory furnaces is considered unreasonable in most cases, but grass-roots smelters can adopt alternative copper smelting processes which do not generate weak sulfur dioxide streams.

Future incremental expansions of existing copper smelters may be restricted somewhat, in comparison with past practices, by emission limitations approved or promulgated under 40 CFR Part 52 to meet national sulfur dioxide ambient air quality standards. However, some existing copper smelters will still be able to expand production within the limits of these requirements. Where these requirements permit, significant expansions are technically feasible

without increasing reverberatory furnace emissions. For example, green-charge reverberatory furnace smelters, which account for 8 of the existing 15 domestic copper smelters, can be converted to calcine-charge reverberatory furnace smelting to achieve substantially increased production without an increase in furnace emissions. Existing copper smelters can also convert to smelting processes which do not employ reverberatory furnaces and can be controlled without using weak sulfur dioxide control devices. Two existing smelters are planning conversions, one existing smelter is installing additional capacity, and one new grass-roots smelter is under construction using processes of this type. Consequently, it appears that a new source performance standard based on the use of copper smelting processes that generate only strong sulfur dioxide streams allows flexibility for expanding some existing smelters. However, other types of expansions, for example the widening of a reverberatory furnace to accommodate existing excess capacity of roasters, would increase reverberatory furnace emissions. The increased furnace emissions could be compensated by a corresponding decrease in emissions from other processing units producing strong sulfur dioxide streams at the smelter provided it has not been necessary to control emissions from all these units to comply with the emission limitations approved or promulgated under 40 CFR Part 52. That is, some expansions which increase reverberatory furnace emissions can be accomplished without increasing total sulfur dioxide emissions from an entire

copper smelter. To allow this type of expansion, an exemption for existing reverberatory furnaces is included in the proposed standards. Specifically, any physical or operational change to any existing reverberatory smelting furnace which results in an increase in sulfur dioxide emission rate from the furnace is not considered a modification to the furnace provided the combined total sulfur dioxide emission rate from all existing and affected facilities at the copper smelter does not increase. The baseline sulfur dioxide emission rate is that allowed under implementation plans approved or promulgated under 40 CFR Part 52.

On the basis of the above factors, it is the judgment of EPA that the proposed standards will allow expansion of some existing copper smelters. EPA recognizes, however, that the economics of incremental expansions are case-specific, depending upon the configuration of the existing smelting process, existing emission control devices, the level of control required to comply with national ambient air quality standards, and a number of economic factors. Accordingly, EPA has funded a contract study to Arthur D. Little, Inc.,(Cambridge, Massachusetts) to examine in more detail several issues concerning the proposed standard for copper smelters, including the impact of the proposed standard on modified copper smelters. The results of this study will be treated as comments on the proposed standard, and the Administrator will consider the results in determining whether the

proposed standard should be revised prior to promulgation. The results of the study will also be made available for public comment during the comment period following proposal.

The smelting industry expressed strong objections, during the development of the proposed standards, that the electric and flash smelting processes have significant limitations. The industry indicated that electric furnace smelting, even though fully as flexible a production method as conventional reverberatory smelting processes now in use, is not viable in some cases because of the non-availability of electric power. The industry also argued that a significant portion of domestically processed copper concentrates cannot be handled by flash furnaces, either because of an insufficient amount of sulfur or excess amounts of lead and zinc in the concentrates. However, EPA surveys show, as discussed in Section 3, that approximately 95 percent of domestic ore concentrates have sufficient sulfur to permit the use of flash smelting and that more than 96 and 99 percent of domestic copper concentrates are sufficiently limited in, respectively, lead and zinc content to permit the use of flash furnaces without encountering major problems in the heat recovery facilities. Other volatile metals, such as arsenic, antimony, beryllium, cadmium, and tin, which could cause similar problems, are also sufficiently limited in domestic ore concentrates to permit the use of flash smelting.

The industry also raised the point that smelters incorporating flash furnaces are limited in the amounts of secondary copper scrap and copper precipitates (produced by acid leaching operations) which they are able to process, compared to conventional domestic smelters incorporating reverberatory furnaces. Flash furnaces normally produce high-grade copper mattes containing 45-65 percent copper, whereas low-grade mattes of 30-40 percent copper are normally produced at most domestic smelters. The increased matte grade leads to reduced copper converter blowing times and lower converter temperatures, thus reducing significantly the amounts of secondary copper scrap and copper precipitates which can be processed in the copper converters.

The recovery of copper from secondary copper scrap and copper precipitates at primary copper smelters is significant and accounts for about 30 percent of the copper produced by the domestic primary copper smelting industry. However, this limitation of the flash smelting process is not likely to be as serious as it first appears. Not every primary smelter currently operating processes significant amounts of secondary copper scrap or copper precipitates. Thus, it is reasonable to assume that not every new smelter will have to process significant amounts of secondary copper scrap or copper precipitates. In these cases, this limitation of flash smelting would be of little concern. Also, there are alternatives to processing at a primary copper smelter by which copper can be recovered from secondary copper scrap and copper precipitates.

For example, the domestic secondary copper smelting industry currently recovers about as much copper from secondary copper scrap as the primary copper smelting industry. Specifically, the secondary copper smelting industry accounts for 45 percent of the copper recovered from secondary scrap and the primary copper smelting industry accounts for the remaining 55 percent. It should also be noted that, by the industry's own admission, smelters employing electric smelting furnaces would not be faced with these limitations. Consequently, if a new copper smelter were required to process significant amounts of secondary copper scrap and copper precipitates, electric smelting rather than flash smelting furnaces could be employed.

With regard to copper precipitates, a number of commercial installations in operation in the United States recover copper from copper leaching operations by leaching/solvent extraction/electrowinning, rather than leaching/precipitation followed by smelting at a primary copper smelter. Currently these installations account for about 20 percent of the copper recovered from copper leaching operations, while the primary smelting industry accounts for the other 80 percent. Consequently, this limitation of flash smelting may result in the expansion of the secondary copper smelting industry and the use of leaching/solvent extraction/electrowinning in place of leaching/precipitation/smelting, rather than limit the recovery of copper from leaching operations within the United States or limit the application of flash smelting.

Finally, in the last stages of the development of the proposed standards by EPA, the industry raised the point that smelters employing flash smelting furnaces and processing copper concentrates containing high levels of impurities such as arsenic, antimony, and bismuth might produce blister copper containing higher levels of these impurities than if the concentrates were processed in conventional domestic reverberatory smelting furnaces. As mentioned above, the increased grade of matte produced by a flash smelting furnace leads to reduced converter blowing time and lower converter temperatures. This was cited by the industry as leading to decreased impurity elimination by the copper converters and thus leading to the production of blister copper of higher impurity levels than that produced by conventional domestic smelters employing reverberatory smelting furnaces. However, the industry did not supply EPA data or information showing that the levels of these impurities are so high in a significant portion of domestic copper concentrates and other copper smelter feed materials that this potential problem would constitute a major limitation to the use of the flash smelting process.

Furthermore, a review by EPA of the various techniques for the refining of blister copper, as discussed in Section 3, indicates that a number of these techniques could be applied to eliminate some increased levels of these impurities. As also discussed in Section 3, blending of high-impurity concentrates with concentrates containing normal or minimal levels of these impurities could be

utilized to alleviate these problems to some extent. In addition, it should be noted here, as above, that by the industry's own admission smelters employing electric smelting furnaces would not be faced with these problems. Consequently, if a new copper smelter were required to process copper concentrates containing higher levels of impurities than could be successfully processed by flash smelting, electric smelting could be employed.

As mentioned above, these points concerning the limitations of smelters employing flash smelting furnaces, with regard to the processing of concentrates containing high levels of various impurities, were raised during the final stages of developing the proposed standards. Preliminary investigations into this area and into the general availability of electrical power for smelters incorporating electric smelting furnaces indicated that the flash smelting process is applicable to the major portion of domestic copper concentrates and that electrical power will be available in the western United States for those new copper smelters which might utilize electric smelting furnaces. However, EPA has funded a contract study to Arthur D. Little, Inc., (Cambridge, Massachusetts) to independently examine this situation in greater detail. The study is to assess the availability and cost of electrical power for new copper smelters employing electric smelting furnaces; to quantify the limitations of the flash smelting process in comparison with the conventional domestic reverberatory furnace smelting process; and to examine the associated economic impact

of the proposed standards, including the impact on modified copper smelters. The results of the Arthur D. Little study will be treated as comments on the proposed standards, and the Administrator will consider the results in determining whether the proposed standards should be revised prior to promulgation.

On the basis of the information available at this time, the choice of the best adequately demonstrated emission reduction system for weak sulfur dioxide streams at copper smelters (considering cost) can be made from the following alternatives:

(1) utilization of the reverberatory furnace with no control of the weak sulfur dioxide stream, while applying a double-absorption sulfuric acid plant to the sulfur dioxide stream of the converters or the roasters and converters, to obtain 70-80% overall sulfur dioxide control at a cost of 1.6 cents per pound of copper;

(2) utilization of a scrubbing system to control the weak sulfur dioxide stream of the reverberatory furnace, while applying a double-absorption sulfuric acid plant to the sulfur dioxide stream of the converters or roasters and converters, in order to obtain 98.5% overall sulfur dioxide control at a cost of 4.4 and 3.4 cents per pound of copper, respectively.

(3) utilization of electric smelting to eliminate weak sulfur dioxide streams, while applying a double-absorption sulfuric acid plant to the blended strong sulfur dioxide stream of

the electric furnace and the converters, in order to obtain 99.5% overall sulfur dioxide control at a cost of 1.9 cents per pound of copper; and

(4) utilization of flash smelting to eliminate weak sulfur dioxide streams while applying a double-absorption sulfuric acid plant to the blended strong sulfur dioxide stream of the flash furnace and the converters, in order to obtain 99.5% overall sulfur dioxide control at a cost of 1.6 cents per pound of copper.

All of the above costs assume that the acid is sold at zero netback to the smelter. As discussed in Section 6.1, the cost of each of the above alternatives, except for scrubbing of the weak sulfur dioxide stream from the reverberatory furnace, is reasonable when compared to the allowable increase of 3 cents per pound of copper. Because the costs of control for alternatives (1), (3), and (4) are approximately the same, the choice can be based on the degree of sulfur dioxide control. The difference in control levels achieved would be large. Either the electric smelting or flash smelting alternative would result in 99.5% overall control of smelter sulfur dioxide emissions, whereas the uncontrolled reverberatory furnace alternative would result in only 70-80% overall sulfur dioxide control. The corresponding approximate sulfur dioxide emission rates are, respectively, 3 and 180-120 tons per day.

After due consideration of the points outlined above, it is the determination of the Administrator that the electric and the

flash furnace smelting processes, in conjunction with double-absorption sulfuric acid plants, constitute the best systems of copper smelter emission reduction, considering cost, which have been adequately demonstrated.

In developing the proposed standards for sulfur dioxide emissions from zinc smelters, both the electrolytic zinc extraction process which generates no weak sulfur dioxide streams and those pyrometallurgical processes which conventionally discharge a weak sulfur dioxide stream from sintering machines were considered. When roasting of zinc concentrates precedes sintering, as practiced at three of the four domestic non-electrolytic zinc smelters, the sintering machine effluent typically contains 3-7 percent of the smelter input sulfur at a concentration of 400-3000 ppm sulfur dioxide. As stated above and in Section 6.2, the high cost (3.2 cents per pound of zinc, assuming acid sold at zero netback to smelter) of scrubbing weak sulfur dioxide emissions from a sintering machine, while applying a double-absorption acid plant to the roaster stream, was judged to be unreasonable when compared to the zinc smelter profit margin of 0.5 cent per pound of zinc.

The electrolytic process produces higher purity, more expensive zinc than is required by the end uses of greater than 50 percent of the U.S. zinc consumption. Some uses such as galvanizing even require the presence of impurities, and thus necessitate debasing of electrolytically produced zinc at an additional cost of 0.5 cent per pound of zinc. Adding this additional cost of 0.5 cent per pound of zinc to the cost of double-absorption sulfuric acid control of the roaster sulfur dioxide stream,

as shown in Table 6-19, results in a total control cost of 1.3 cents per pound of zinc. As discussed in Section 6.2, this cost is not reasonable when compared to the zinc smelter profit margin of 0.5 cent per pound of zinc. On the other hand, the non-electrolytic zinc smelting process accommodates the two major types of reduction furnaces which individually produce intermediate-grade zinc and the lower (Prime Western) grade zinc for end uses such as galvanizing.

The Robson roast-sintering process was also investigated to determine its feasibility for elimination of the weak sulfur dioxide stream by internally recirculating the weak sulfur dioxide stream to the areas of the combined roast-sintering machine where the primary roasting reaction takes place. The use of recirculation of the weak sulfur dioxide stream requires the installation of a high-efficiency particulate-removal system in order to prevent recapture of the lead and cadmium impurities in the sinter bed. The Robson roast-sintering process, while using gas recirculation, is basically suited only for the production of sinter to be used in the horizontal and vertical retort furnaces. An exceptionally hard and strong sinter is required for electrothermic furnace reduction, and there is some doubt that even briquetting of the product sinter of the Robson process can produce an acceptable sinter for the electrothermic furnace. Thus, if the standards were based solely on the capabilities of the Robson technique, the effect would be the prohibition of a significant modern, versatile reduction technique, the electrothermic furnace, which produces over 25% of the domestic zinc production. In addition to the technical

shortcomings associated with the Robson process, the cost of 1.2 cents per pound of zinc for double-absorption acid plant control (not including the cost of a high-efficiency particulate-collection system for the recycle stream) is 50% greater than the cost for double-absorption acid plant control of the strong sulfur dioxide streams of conventional roasting and sintering smelters, despite only a 2-1/2% to 6% increase in overall smelter sulfur dioxide control.

After due consideration of the shortcomings of the electrolytic zinc extraction process and the Robson roast-sintering process discussed above, the Administrator has determined that these processes have not been demonstrated to be of sufficiently broad applicability to justify basing the proposed standards solely on these processes. Accordingly, the proposed standards do not specify a sulfur dioxide emission limitation for sintering machines. However, best technology (considering costs) does include the control of roaster sulfur dioxide streams. Thus, the proposed standards require the equivalent of double-absorption sulfuric acid plant control for roasters. Also, any sintering machine which emits more than 10 percent of the smelter input sulfur (as sulfur dioxide) will be subject to the same sulfur dioxide standard as zinc roasters. This ensures that sintering machines which are operated simultaneously as roasters, and which have been judged to be capable of generating strong sulfur dioxide effluents, will be controlled to the level required on all other strong streams.

In developing the proposed standards for sulfur dioxide emissions from lead smelters, the following processes were considered: (a) the conventional process that does not use sintering machine gas recirculation,

(b) the similar process that includes sintering machine gas recirculation, and (c) the electric furnace-converter process. In the first instance, the sintering machine effluent is either a single weak sulfur dioxide stream, or a single strong sulfur dioxide stream from the front of the machine and a single weak sulfur dioxide stream from the back. If the sintering machine effluent is split, the weak sulfur dioxide stream typically contains 20 percent of the smelter input sulfur. Gas recirculation in the second process permits the attainment of a single strong sulfur dioxide discharge from the sintering machine. Both of the first two processes discharge a weak sulfur dioxide stream, containing approximately 7 percent of the smelter input sulfur at a gas stream concentration of 500-2500 ppm sulfur dioxide, from blast furnaces. The third process, using an electric furnace and converters, is the only demonstrated lead smelting process which has been identified to be capable of eliminating all weak sulfur dioxide streams. However, this process has to date been used only at a single foreign smelter, and no sulfur dioxide control has been applied to the converters. Further, the electric furnace process has not yet handled concentrates containing less than 65 percent lead, whereas domestic concentrates typically contain 55 percent lead.

In the judgment of the Administrator, it has not been demonstrated that the electric furnace process is of sufficiently broad applicability to justify basing the proposed standards solely on this process. Thus, the choice of the best adequately demonstrated emission reduction system for lead smelters (considering cost) can be made from the following alternatives:

(1) utilization of a conventional sintering machine with no control of the weak sulfur dioxide streams of the sintering machine or blast furnace, while applying a double-absorption sulfuric acid plant to the strong sulfur dioxide stream of the sintering machine, in order to obtain 68.5% overall sulfur dioxide control at a cost of 0.5 cent per pound of lead;

(2) utilization of a scrubbing system to control the weak sulfur dioxide stream of a conventional sintering machine with no control of the weak sulfur dioxide stream of the blast furnace, while applying a double-absorption sulfuric acid plant to the strong sulfur dioxide stream of the sintering machine, in order to obtain 89% overall sulfur dioxide control at a cost of 3.1 cents per pound of lead;

(3) utilization of a scrubbing system to control the weak sulfur dioxide streams of a conventional sintering machine and blast furnace, while applying a double-absorption acid plant to the strong sulfur dioxide stream of the sintering machine, in order to obtain 96.5% overall sulfur dioxide control at a cost of 3.6 cents per pound of lead;

(4) utilization of a recirculating sintering machine to eliminate the weak sulfur dioxide stream of the sintering machine, while applying no control to the weak sulfur dioxide stream of the blast furnace, and while applying a double-absorption acid plant to the strong stream of the sintering machine, in order to obtain 91% overall sulfur dioxide control at a cost of 0.7 cent per pound of lead; and

(5) utilization of a recirculating sintering machine to eliminate the weak sulfur dioxide stream of the sintering machine, while applying a scrubbing system to the weak sulfur dioxide stream of the blast furnace, and while applying a double-absorption acid plant to the strong stream of the sintering machine in order to obtain 98.5% overall sulfur dioxide control at a cost of 1.8 cents per pound of lead.

All of the above costs assume that the acid is sold at zero netback to the smelter. As discussed in Section 6.3, the costs of alternatives (2), (3), and (5), all of which include scrubbing of weak sulfur dioxide streams, are not reasonable, but the costs of control for (1), conventional sintering, and (4), recirculating sintering, can be borne by the lead smelting industry. The control cost of the recirculating sintering machine option is approximately 50% greater than the control cost of conventional sintering, but the overall degree of sulfur dioxide emission control is increased 33%. After due consideration of the points outlined above, the Administrator has determined that the proposed standards should be based on the generation of a strong sulfur dioxide sintering machine discharge, thereby effectively requiring sintering machine gas recirculation. Accordingly, the proposed standards require the equivalent of double-absorption sulfuric acid plant control for sintering machines, electric furnaces, and converters.

7.5.1.3 Particulate Emissions

Particulate emissions are generated by several primary copper, zinc, and lead smelting processes. However, those processes which use sulfuric

acid plants, elemental sulfur plants, or scrubbing systems to control smelter sulfur dioxide emissions simultaneously control particulate emissions because proper operation of these sulfur dioxide removal systems requires prior cleaning of the sulfur dioxide feed stream by the best available particulate control technology. The proposed sulfur dioxide standards require the equivalent of double-absorption sulfuric acid plant control on the effluents from (a) copper roasters, smelting furnaces, and converters, (b) zinc roasters, and (c) lead sintering machines (for the gases which pass through the sinter bed), electric smelting furnaces, and converters. The only sources which emit significant particulate streams that are not also required to control sulfur dioxide emissions to the levels equivalent to sulfuric acid plant control are copper dryers, zinc sintering machines, and lead blast furnaces, dross reverberatory furnaces, and sintering machines (discharge end). Thus, explicit standards for particulate emissions from these sources are proposed.

As discussed in Section 4, fabric filtration is one of the most efficient (greater than 99.9% by mass, on standard dusts) methods used for the collection of particulate matter from gas streams. Currently, baghouses containing industrial fabric filters are used for particulate control on all of the blast furnace operations and five of the six sintering operations within the primary domestic lead smelting industry, on one of the three domestic primary zinc sintering operations, and on the copper concentrate dryer of an electric furnace smelter which will undergo startup in the near future. The costs of baghouse control for these operations are not unreasonable for the primary zinc and

lead smelting industries. In fact, the economic return due to the use of baghouses for by-product recovery offsets the emission control costs in most cases, as evidenced by the widespread use of baghouses within the primary lead and zinc smelting industry before the advent of air pollution control regulations. Thus, the Administrator has determined that the proposed standards for particulate matter should require the equivalent of baghouse control.

7.5.2 Quantitative Emission Limits

7.5.2.1 Sulfur Dioxide

Several methods of specifying sulfur dioxide emission limitations were considered, including sulfur dioxide concentration of an emission stream, percentage recovery of input sulfur to a smelter, and mass emission of sulfur dioxide per unit of metal or unit of intermediate material produced.

The performance of a sulfuric acid plant or other sulfur dioxide control device can be characterized by the efficiency of sulfur dioxide capture. For a sulfuric acid plant, the efficiency can be expressed in terms of mass of sulfur dioxide emitted per unit of sulfuric acid produced, or in terms of plant inlet and outlet sulfur dioxide concentrations. In practice, acid plant vendors frequently specify performance in terms of a guaranteed maximum outlet sulfur dioxide concentration, based upon inlet sulfur dioxide concentration being in a stated range. Therefore, the measurement of outlet sulfur dioxide concentration from a metallurgical acid plant is a means of assessing the effectiveness of the plant in controlling sulfur dioxide emissions. The availability of sulfur dioxide concentration monitors affords a convenient method of monitoring outlet concentration, and thereby plant performance, on a continuous basis.

The development of a sulfur dioxide emission limitation in terms of percentage recovery of input sulfur to a smelter

involves a knowledge of both the efficiency of control devices in capturing the sulfur dioxide delivered to the devices and the distribution of the input sulfur among several output material flow streams from the smelter. Sulfur enters a smelter primarily as a constituent of the concentrates to be smelted. Sulfur typically leaves a smelter by several routes such as: (a) sulfur contained in by-products of control devices, for example, sulfuric acid; (b) sulfur discharged to the atmosphere, either controlled or uncontrolled, through stacks; (c) sulfur discharged to the atmosphere as fugitive emissions; and (d) sulfur contained in slags, or metal-bearing products or by-products. To develop a quantitative percentage sulfur recovery limitation, it would be necessary to determine sulfur mass balances at smelters. Representatives of the smelting industry have indicated to EPA that in their experience sulfur mass balances can be resolved only to within 20-40 percent of the input sulfur. Even if more accurate methods were developed and percentage sulfur recovery limitations were set, the monitoring of smelter operation would be relatively complicated by comparison with monitoring only the concentration of effluent sulfur dioxide streams. It would be necessary to determine the total mass of sulfur contained in at least two material flow streams over an appropriate interval of time, for example, in the concentrate feed stream and in the sulfur-containing material produced by a control device. In general, it would be necessary to monitor more than

two streams to close the sulfur mass balance, for example, to account for sulfur contained in slags. If an air emission stream were monitored in determining percentage sulfur recovery, it would be necessary to determine the mass rate of flow of the stream in addition to the sulfur dioxide concentration.

A production-based emission limitation, expressed as mass emission of sulfur dioxide per unit of material produced, must account for variations in the sulfur content of the raw materials processed per unit of material produced by a smelter. For example, copper-containing materials such as scrap and cement copper which contain little sulfur are processed by some copper smelters, but not by others. This variation in sulfur content could be significant on a day-to-day basis at a given smelter, as well as among various smelters which handle differing quantities of various feed materials. Apart from the difficulties in developing an appropriate emission limitation, the monitoring of a production-based limitation would be relatively complex. One method of monitoring would necessitate, for example, measuring the mass rate of flow of the emission stream, in addition to the sulfur dioxide concentration, and measuring the production of material.

After considering the above factors, the Administrator has determined that the proposed sulfur dioxide emission limitations should be specified as allowable concentrations of sulfur dioxide in gases emitted from affected facilities. The performance of best demonstrated

emission control devices is directly related to the outlet sulfur dioxide concentrations from the devices. The development of percentage sulfur recovery emission limitations or production-based emission limitations would have required a much more extensive data base, and no increased effectiveness in controlling sulfur dioxide emissions would have resulted. The proposed sulfur dioxide emission limitations can be effectively monitored on a continuous basis, whereas the monitoring of percentage sulfur recovery or production-based limitations for smelters is generally more complex and likely to be of unacceptable accuracy.

Sulfuric acid plants had been installed to recover or control sulfur dioxide in strong effluent streams at several domestic smelters prior to initiating development of the proposed standards. These plants were all of single-absorption design. The operation of these metallurgical sulfuric acid plants, as well as that of more efficient double-absorption plants which were operating at several foreign smelters, differs from that of conventional domestic sulfur-burning acid plants because of the large fluctuations in flow rate and sulfur dioxide concentration generated by some smelting processes. Accordingly, the emission control performance of metallurgical sulfuric acid plants could not be inferred directly from the well-documented performance capabilities of conventional domestic sulfuric acid plants. The establishment of sulfur dioxide emission limits for metallurgical sulfuric acid plants thus required that emission tests be conducted at smelting facilities.

The initial objective of the emission testing program was to develop an appropriate sulfur dioxide emission limitation for single-absorption acid plants, since no double-absorption plants were in operation at domestic smelters. Three primary factors to be considered in interpreting the data were identified:

1. Determination of the minimum averaging time which effectively masks the large fluctuations in acid plant outlet sulfur dioxide concentration. The control of copper converter effluents was judged to be the most severe problem from the viewpoint of concentration fluctuations.
2. Determination of a long-term effect of deterioration of acid plant catalyst on outlet sulfur dioxide concentration.
3. Determination of the magnitude of time-averaged outlet sulfur dioxide concentrations as compared with vendor guarantees for short-term performance tests.

The sulfur dioxide emissions from a single-absorption sulfuric acid plant (Kennecott Copper Corporation, Garfield, Utah, No. 7 acid plant) were continuously monitored by EPA for a period of approximately ten weeks. The plant treated a portion of the effluent discharged from nine copper converters. A detailed analysis of a representative three-week period of data was performed, the results of which are contained in Appendix III. The vendor guarantee for the acid plant, constructed in 1970, is equivalent to an outlet concentration of 2700 ppm sulfur dioxide. The computation of time-averaged sulfur dioxide emission concentrations, for averaging times of 4 to 12 hours, showed that an averaging period of at least

six hours is necessary to substantially mask short-term high (>7000 ppm) and low (<1000 ppm) sulfur dioxide emission concentration fluctuations, and produce time-averaged emissions within the vendor guarantee.

The control efficiency of the No. 7 acid plant was judged not to have been significantly influenced by catalyst deterioration over the ten-week period of continuous monitoring. To estimate the extent of degradation in acid plant performance between periodic catalyst screenings, the results of the EPA emission tests carried out on the No. 6 and No. 7 acid plants at the same Kennecott smelter in June of 1972 were analyzed. At that time the No. 7 acid plant was in the last month of operation before catalyst screening, and the No. 6 acid plant was in the second month of operation following catalyst screening. The emissions from the No. 7 acid plant were 30% higher than those from the No. 6 acid plant (see Appendix III). This increase is attributable to catalyst deterioration and probably to a minor extent attributable also to design and construction differences between the two acid plants.

After the first domestic metallurgical double-absorption sulfuric acid plant achieved routine operation, EPA began continuous sulfur dioxide monitoring of the plant to develop an appropriate sulfur dioxide emission limitation for double-absorption sulfuric acid plants. The acid plant treated the entire effluent from a three-converter aisle at the ASARCO copper smelter in El Paso, Texas. Sulfur dioxide emissions from

the acid plant were monitored for approximately seven months from May until December 1973. The data from this test are the primary basis for the proposed sulfur dioxide emission limitations.

A detailed analysis of the ASARCO El Paso data is contained in Appendix VI. The outlet sulfur dioxide concentration was averaged over intervals extending from 15 minutes to 10 hours to determine the minimum averaging time that masks large fluctuations. For each of the several averaging times, percentages of the total numbers of averages during the test period which exceeded selected outlet concentration levels were calculated. The results showed the expected trend that longer averaging times produce fewer excursions above preselected outlet concentrations. Further, most of the time-averaged outlet concentrations are considerably less than the vendor guarantee of 500 ppm sulfur dioxide for the acid plant. For example, only five percent of the averages exceed 250 ppm when averaging times of 5 hours or longer are used.

To determine an appropriate averaging time for copper smelter emissions, the effect of averaging time on percentage of excursions above the vendor guarantee of 500 ppm sulfur dioxide for typical copper converter operations was examined. Since the inlet sulfur dioxide concentrations for the ASARCO El Paso test were considerably lower (3.8 percent average) than the 5 to 6 percent sulfur dioxide of typical copper converter operations, the 500 ppm sulfur dioxide vendor guarantee was adjusted to 400 ppm based on information collected

during the test that related inlet and outlet sulfur dioxide concentrations. The data show that the decrease in percentage of excursions with increasing averaging time is relatively small for averaging times longer than five to six hours. For example, an increase in averaging time from 6 hours to 10 hours decreases the percentage of averages exceeding 400 ppm sulfur dioxide only slightly, from 1.20 percent to 0.55 percent. It is concluded that a six-hour averaging time effectively masks fluctuations in outlet sulfur dioxide concentrations from copper converter operations, and the proposed sulfur dioxide standard for copper smelters is based on this averaging period. A six-hour averaging time is also predicted, as discussed above in this section, from results of EPA continuous monitoring of a single-absorption sulfuric acid plant that processes copper converter gases.

The proposed sulfur dioxide standards for primary lead smelters and primary zinc smelters specify a two-hour averaging period, rather than a six-hour period as for copper smelters. The shorter averaging time is based on judgments that normal lead sintering machine and zinc roasting operations are inherently more steady than copper converter operations. EPA analyzed continuous records of sulfur dioxide concentrations produced by two domestic lead sintering machine operations. The fluctuations were not as severe as those observed from copper converter operations, and the changes in gas flow rate are not expected to be as large

as those encountered in normal copper converter operations. Industry representatives have stated that sintering machines are frequently shut down and restarted, thus precluding steady operation of acid plants. However, it is not necessary to damp possible excess emissions resulting from these shutdowns and startups by increasing the averaging time for an emissions limitation, because such excess emissions are excluded from compliance testing under new source performance standards. Zinc roasters which are subject to the proposed sulfur dioxide standard discharge gas streams which are even more steady than lead sintering machine effluents in sulfur dioxide concentration and flow rate.

Analysis of the ASARCO El Paso data shows that there was no detectable catalyst deterioration during the monitoring period and, as discussed above, that the inlet sulfur dioxide concentration was considerably lower than would be realized from some other smelting operations. To develop a sulfur dioxide emission limitation from these data, it is therefore necessary to adjust the data to account for the effects of catalyst deterioration and higher inlet sulfur dioxide concentrations. The designer of the ASARCO acid plant indicated that a 10 percent increase in sulfur dioxide emissions was expected during the two-year period of operation between scheduled catalyst screenings. The maximum sulfur dioxide inlet concentration which can reasonably be expected to be generated by smelter processing equipment with sufficient oxygen content for processing in an

acid plant is 9 percent. A correlation between inlet and outlet sulfur dioxide concentrations measured during the test showed that an increase in inlet concentration from the average value for the test, 3.8 percent sulfur dioxide, to a value of 9 percent sulfur dioxide would produce an increased emission of approximately 200 ppm SO_2. Accordingly, the test data for six-hour averages adjusted for catalyst deterioration and 9% sulfur dioxide inlet concentration are shown in Table 7-1.

Table 7-1

FREQUENCY DISTRIBUTION OF ADJUSTED
OUTLET SULFUR DIOXIDE CONCENTRATIONS

(Averaging time - 6 hrs; Number of averages - 3876)

Outlet SO_2 (ppm)	400	450	500	550	600	650	700	750
Percentage of averages exceeding outlet SO_2	20.0	10.0	5.00	2.45	1.75	1.20	0.90	0.45

The data of Table 7-1 show that no more than 10 percent of the six-hour averages exceeds 450 ppm SO_2. While increases in concentration above 450 ppm SO_2 initially produce substantial decreases in the percentage of excursions above the increased outlet concentrations, increases above 600 to 650 ppm SO_2 produce only very small increments in the percentage excursions. On the basis of the adjusted data of Table 7-1, a 650 ppm SO_2 emission limitation would result in no more than 1.20 percent excursions.

It should be recognized, however, that the percentages of excursions cited in Table 7-1 do not indicate directly the probabilities of exceeding a specific emission limitation in a performance test under

new source performance standards, since compliance is determined from the average of three runs. To estimate the reduced probability of exceeding an emission concentration by averaging three runs, all the six-hour averaged outlet concentrations exceeding 400 ppm SO_2 during the test (equivalent to 650 ppm SO_2 in Table 7-1) were reviewed. Outlet concentrations during the period 24 hours prior to, and 24 hours after, each excursion were used to compute the maximum average of three runs during the 48-hour period. The three six-hour averages were chosen so that none of the periods overlapped. Of the 48 excursions recorded during the entire test, only 6 resulted in excursions based on the average of three runs. Therefore, the percentage excursion of 1.20 percent cited for 650 ppm SO_2 in Table 7-1 would correspond to a much smaller percentage rate of excursions during performance tests under new source performance standards.

The proposed sulfur dioxide emission limitation is 650 ppm SO_2, averaged over a six-hour period for copper smelters and over a two-hour period for lead and zinc smelters. The EPA continuous monitoring data from a double-absorption sulfuric acid plant show that this limitation: (a) allows for a reasonable increase in emissions due to acid plant catalyst deterioration, (b) accommodates the effects of high inlet sulfur dioxide concentrations on outlet concentrations, and (c) accounts for the effects of large fluctuations in acid plant inlet and outlet sulfur dioxide concentrations. However, the EPA

data also show that a 650 ppm SO_2 limit will be exceeded a small percentage of the time during normal operation, and that an increase in the sulfur dioxide limit decreases this percentage of excursions. The alternative of choosing a higher emission limit than 650 ppm SO_2 was not chosen because: (a) substantial increases in the limit would decrease the probable percentage of excursions only slightly, and there is no certainty that a limit much larger than 650 ppm SO_2 would not be exceeded on rare occasions, and (b) an emission limit substantially in excess of 650 ppm SO_2 would not reflect proper operation and maintenance of an acid plant during most operating periods, since some 90 percent of the time the plant could limit emissions to no more than 450 ppm SO_2.

Although the proposed standards are based on the application of double-absorption acid plants to strong sulfur dioxide streams, scrubbing systems and elemental sulfur plants with tail gas scrubbing are technically capable of complying with the quantitative sulfur dioxide limit (650 ppm) as discussed in Section 4.

7.5.2.2 Particulate Matter

As discussed in Sections 4 and 5, fabric filters have commonly been installed on blast furnaces and sintering machines within the primary domestic lead smelting industry. Fabric filters have also been installed on sintering machines in the domestic primary zinc smelting industry and on one dryer in the domestic primary copper smelting industry. To obtain data for the development of the proposed standards for particulate matter, EPA conducted emission tests on effluents from baghouses installed on the lead blast furnace at the ASARCO lead smelter in Glover, Missouri, in July 1973, and on a zinc sintering machine at the New Jersey Zinc Company smelter in Palmerton, Pennsylvania, in February 1974. The latter test was unsuccessful because an equipment malfunction allowed a portion of the sintering machine gases to bypass the control equipment and enter the stream being sampled for emissions. Extensive emission testing to identify particulate matter emissions from primary copper, zinc and lead smelters was not conducted because of the small number of modern fabric filters in these industries which have suitable configurations for testing.

As discussed in Section 4, the average concentration of three runs of particulate emissions performed by EPA at the ASARCO lead smelter in Glover, Missouri, was approximately 32 mg/dscm (0.014 gr/dscf). The range of the three runs was 18 to 40 mg/dscm (0.008 to 0.017 gr/dscf). The data from this test are summarized in Appendix VII. Other EPA test data on particulate emissions from sources similar to primary lead and

zinc smelters, such as secondary lead smelters and secondary brass and bronze ingot production plants, are also discussed in Section 4 and summarized in Appendix VII. On the basis of these data, it is concluded that a properly designed, operated, and maintained baghouse can limit outlet particulate matter emissions from copper dryers, zinc sintering machines, lead sintering machine discharge ends, lead blast furnaces, and lead dross reverberatory furnaces to less than 50 mg/dscm (0.022 gr/dscf). The proposed standards for particulate matter for copper, zinc and lead smelters reflect the use of control devices equivalent to the baghouses tested, and limit particulate matter emissions to 50 mg/dscm (0.022 gr/dscf).

7.5.2.3 Opacity

The proposed standards include opacity limitations on effluents from (a) copper dryers, (b) zinc sintering machines, lead blast furnaces, lead dross reverberatory furnaces, and discharge ends of lead sintering machines, and (c) sulfuric acid plants used to comply with the proposed sulfur dioxide emission limitations.

A general discussion of the role of opacity standards under section 111 of the Act is contained in the preamble to standards of performance for new stationary sources promulgated on March 8, 1974 (39 FR 9308). The proposed opacity standards are regulatory requirements, as are the proposed sulfur dioxide and particulate matter concentration standards. Enforcement of an opacity standard is not contingent on first showing that a corresponding concentration standard is being violated. Where opacity and concentration standards are applicable to the same source, the opacity standard is not more restrictive than the concentration standard. The concentration standard is established at a level which will result in the design, installation, and operation of the best adequately demonstrated system of emission reduction (taking costs into account) for each source. The opacity standard is established at a level which will require proper operation and maintenance of such control systems on a day-to-day basis, but not require the design and installation of a control system more efficient or expensive than that required by the concentration standard.

Within the proposed opacity standards, there are specified periods during which the opacity standards do not apply. Time

exemptions further reflect the stated purpose of opacity standards by providing relief from such standards during periods when acceptable systems of emission reduction are judged to be incapable of meeting prescribed opacity limits. Opacity standards do not apply to emissions during periods of startup, shutdown, and malfunction (38 FR 28564), nor do opacity standards apply during periods judged necessary to permit the observed excess emissions caused by, for example, bag shaking and unstable process conditions. Time exemptions provide for circumstances specific to individual source categories and, coupled with the startup-shutdown-malfunction provisions and higher-than-observed opacity limits, provide assurance that opacity standards are not unfairly stringent.

As discussed above in this chapter, the proposed standards for particulate matter generated by copper dryers, by sintering machines, and by lead blast furnaces, dross reverberatory furnaces, and sintering machine discharge ends are based upon the application of fabric filters to these sources. As discussed in Section 4 and summarized in Appendix VIII, EPA observations of the opacity of the effluents from the baghouse operating on the ASARCO lead blast furnace at El Paso, Texas, were of more than 10 percent opacity for a total time of only some 8 minutes during one test of approximately 14 hours duration. The observations of periodic visible emissions were as high as 35 percent opacity. However, the opacities averaged for two observers exceeded 20 percent for an average of only 5 seconds per hour during the entire test period with a maximum of 30 seconds per hour. In another set of observations of the opacity

of the effluents from the same baghouse, visible emissions were observed during a greater percentage of the observation time. The periods of highest opacity, during which up to 40 percent opacity was observed, were correlated with the shaking of bags. The opacities averaged for two observers were greater than 20 percent for slightly less than 4 minutes and 2 minutes during, respectively, the first and second hours of observation. On the basis of these data, it is the Administrator's judgment that baghouses applied to the primary copper, zinc or lead smelter particulate emission streams can be properly designed, maintained, and operated such that:

1. The opacity is limited to less than 20 percent except for periods associated with bag shaking, and
2. A time exemption of two minutes per hour is adequate to accommodate periods of higher opacity associated with bag shaking.

The purpose of the proposed opacity standards for sulfuric acid plants used as control devices to comply with the sulfur dioxide standards is to ensure: (a) that the acid plant is properly maintained and operated to minimize SO_3 emissions which would be converted into sulfuric acid mist in the atmosphere, and (b) that a high-efficiency mist eliminator is installed, maintained, and operated to collect sulfuric acid mist within the acid plant stack. As discussed in Section 4, well-designed and operated sulfuric acid absorbing towers incorporating high-efficiency mist eliminators are capable of restricting sulfuric

acid mist emissions from sulfuric acid plants to low-opacity wisps. Acid plant and mist eliminator manufacturers have stated that the emissions from sulfuric acid plants equipped with high-efficiency mist eliminators are normally of less than 10 percent opacity. To obtain additional data on the opacity of the effluent from a metallurgical double-absorption sulfuric acid plant, EPA observed emissions at the ASARCO copper smelter in El Paso, Texas. The data are summarized in Appendix VIII. During approximately 10 hours of simultaneous observations by two observers over a period of two days, visible emissions were detected during only a single 5-6 minute period. However, the opacity exceeded 10% for 2.5-5.5 minutes and 20% for 1.75-2.5 minutes as determined by the two observers, and reached as high as 35% opacity. EPA continuously monitored inlet sulfur dioxide concentration and outlet sulfur dioxide concentration of the acid plant, as well as monitoring other acid plant and process parameters, during the observation of acid plant opacity. An analysis of these data did not indicate that a malfunction had occurred, and the short, isolated period of visible emissions was concluded to be a part of normal metallurgical acid plant operation. Accordingly, a time exemption for periods of higher than normal opacity is justified. On the basis of the above data and information, it is the Administrator's judgment that a properly designed, maintained, and operated metallurgical double-absorption sulfuric acid plant equipped with a high-efficiency mist eliminator

can limit visible emissions to no more than 20% opacity, except for two minutes in any one hour.

REFERENCES FOR SECTION 7.

1. "Air Quality Criteria for Sulfur Oxides," U.S. Dept. of Health, Education, and Welfare, Public Health Service, NAPCA Publication No. AP-50, 1970.

2. "Air Quality Criteria for Particulate Matter," U.S. Dept. of Health, Education, and Welfare, Public Health Service, NAPCA Publication No. AP-49, 1969.

8. ENVIRONMENTAL EFFECTS

8.1 SECONDARY POLLUTION

For the purposes of this investigation, secondary pollution is meant to include land pollution and water pollution. Various forms of water pollution, as discussed in the text, are characterized below:

1. Dissolved solids (or total dissolved solids) - These are theoretically the anhydrous residues of dissolved constituents contained in the water. Dissolved solids can be detrimental to fresh water since, as the concentration increases, fresh water will become more saline. Water quality factors such as taste and color will be affected.
2. Chemical oxygen demand (C.O.D.) - This is a measure of the oxygen-consuming capacity of organic and inorganic matter present in water or waste water. As C.O.D. increases, water quality decreases because of the decreased dissolved oxygen content available for support of aquatic life.
3. Hardness of water - This is a characteristic of water imparted by salts of calcium, magnesium, and iron, such as bicarbonates, carbonates, sulfates, chlorides, and nitrates, that causes the curdling of soap, increased consumption of soap, deposition of scale in boilers, damage in some industrial processes, and sometimes objectionable tastes.
4. Soluble magnesium salts (epsom salts) - This is a constituent of dissolved solids. Magnesium is considered relatively

non-toxic to man and not a public health hazard because, before toxic concentrations are reached in water, the taste becomes quite unpleasant. At high concentrations, magnesium salts have a laxative effect, particularly upon new users, although the human body can develop a tolerance to magnesium over a period of time.[1]

Land pollution, as discussed in this text, refers to the disposal of the solid waste created by the neutralization of abatement-derived sulfuric acid.

For the primary nonferrous smelting industry, two distinct potential sources of secondary pollution can be identified. The first type results from the application of sulfuric acid plants to strong sulfur dioxide smelter off-gases if the sulfuric acid cannot be marketed and must be neutralized. The other type is associated with the application of scrubbing techniques to weak gas streams. It is anticipated that the production and possible disposal of elemental sulfur and liquid SO_2 will not produce secondary pollution if adequate safeguards are taken.

There are numerous prospective uses for sulfuric acid, including various uses in the chemical industry, particularly for acidulating phosphate rock to produce phosphate fertilizer; the leaching of copper oxide ores and low-grade copper sulfide/copper oxide ores; and leaching of uranium ores to process the uranium into a concentrated form. All domestic primary nonferrous smelters are marketing their current production of sulfuric acid or using it internally. While excessive costs of shipping to outlets may preclude the marketing

of some sulfuric acid from new acid production capacity at smelters, the strength of the present acid market indicates that most of the acid can be sold.

Neutralization of abatement-derived sulfuric acid by the "wet" process may produce both land pollution and water pollution if a marketable application for the neutralized acid sludge (gypsum) cannot be found. Ponding has been a technique favored by a number of industries for waste disposal, and it is anticipated that smelters which cannot dispose of neutralized acid will employ the same technique. Water pollutants from ponds are typically introduced into underground and surface water supplies through seepage from cracks in the base of the pond and from pond overflow, respectively. The possible forms of water pollution include dissolved solids, chemical oxygen demand, soluble magnesium salts (epsom salts) and increased water hardness.

Procedures and techniques are available which will prevent the water pollution problems of neutralization and subsequent ponding from occurring:

1. Proper site selection and location of waste disposal ponds.
2. The use of impermeable pond liners.
3. Closed-loop operation of ponds to prevent pond liquor overflow.

The concerns expressed about potential water pollution problems from the point of view of the magnitude of the soluble contaminants

in the gypsum sludge do appear justified, however, when adequate safeguards are not taken.

The "dry" sulfuric acid neutralization process shows promise for producing minimal secondary pollution problems. One domestic primary copper producer has stated that a method of neutralization has been developed which results in the production of a hard-crust, dry gypsum product. This product, as illustrated by a pilot study, will not produce water pollution.

The purge or spent scrubber solutions from the ammonia-based, sodium-based, dimethylaniline, and calcium-based scrubbing systems, if directly discharged to a local water course, could produce water pollution. The possible forms of water pollution include chemical oxygen demand, dissolved solids, increased organic content, soluble epsom salt content, and increased water hardness. Methods to solve the problems of water pollution are available and have been demonstrated for both the ammonia and sodium-based scrubbing systems. Practical disposal methods for the dimethylaniline purge are also available. Closed-loop effluents or water treatment facilities will, in most situations, be required for the spent calcium-based scrubber solution; solid waste pollution is a possible result of this scrubbing technique.

In conclusion, several types of possible secondary pollution derived from air pollution control have been identified. Methods to minimize these problems have been demonstrated or are being developed.

8.1.1 Neutralization of Sulfuric Acid

The amount of sulfur-containing materials which must be marketed or discarded varies directly with the degree of SO_2 control attained by a smelter. Strong SO_2 gas streams are currently controlled on the basis of marketability. In the past, sulfuric acid or liquid SO_2 plants have been constructed and operated to produce sulfuric acid or liquid SO_2 in sufficient quantities for sale or internal consumption. Of the 28 existing domestic primary copper, zinc, and lead smelters, nineteen smelters produce sulfuric acid and one smelter produces liquid SO_2. These two commodities have been the only sulfur-containing materials produced in the United States from smelter off-gases. Future control plans, as envisioned by these existing facilities to ensure compliance with local and national ambient air quality standards, were presented in Section 5. These plans include the construction of additional sulfuric acid and liquid SO_2 plants. One new smelter, the construction of which has just been announced, plans to produce elemental sulfur from smelter off-gases. Thus, in all probability, much of the sulfur which enters a nonferrous smelter as a constituent of the concentrate will be recovered from smelter off-gases through the utilization of an elemental sulfur plant, a liquid SO_2 plant, or a sulfuric acid plant.

Table 8-1 tabulates SO_2 recovery statistics for the existing domestic lead, zinc, and copper industries:

Table 8-1. SULFUR OXIDE GENERATION AND RECOVERY AT U.S. SMELTERS (1969-1972)

Type Smelter	Concentrate Processed (T/D)	Sulfur Content (T/D)	SO_2 Generated (T/D)	SO_2 Controlled (T/D)	Overall SO_2 Control (%)	Equiv. H_2SO_4 Prod. (T/D)
Copper	18,970	6,070	11,900	3,700	31	5,660
Zinc	3,405	1,022	1,940	1,322	68	2,000
Lead	2,950	525	980	260	27	400

Thus, an approximate total of 8,060 tons per day of sulfuric acid are currently being produced and consumed by either internal usage or the domestic market. Magnitudes of the specific applications of this metallurgically produced sulfuric acid are not known. The primary application of this sulfuric acid is for the production of fertilizer. Some acid is used as a leaching medium for oxide ores. Zinc smelters in the northeast section of the United States supply acid to steel mills for steel pickling. Several smelters utilize their by-product sulfuric acid internally as makeup for electrolytic processes, while other smelters employ large chemical companies which, in turn, market the acid.

Cost data received from several smelters that operate metallurgical sulfuric acid plants indicate that, on the average, the product acid is currently being sold at a net loss. Of the reporting smelters, the zinc and copper facilities indicated a net profit,

whereas the reporting lead smelters stipulated a net loss in acid sales. Since cost data were not received from all metallurgical acid-producing facilities, the profit and loss averages computed for the nonferrous industry do not supply a complete picture of sulfuric acid profitability.

New SO_2 control schemes planned by the domestic copper industry should increase sulfuric acid production considerably. SO_2 abatement plans made by the existing zinc and lead smelters should not increase acid production very much beyond the values shown in Table 8-1.

Recent pronouncements by industry about the requirements of sulfur compounds such as sulfuric acid and liquid SO_2 have indicated that the once-predicted glut of sulfur on the market may not appear. Indeed, over and above the sulfuric acid used internally by the smelting industry, there are indications that any additional sulfur derived from pollution abatement may fill a potential sulfur deficiency in certain geographical areas of the country which are not within reasonable distances of commercial sulfur and sulfuric acid producers. Thus, future sulfur market conditions may make SO_2 abatement programs more attractive and possibly profitable.

There is no doubt that an analysis of the disposition of sulfuric acid produced from smelter effluents is extremely complex. However, some predictions regarding the potential for acid neutralization can be made:

1. New copper smelters will most likely employ process technology which will allow the production of either elemental sulfur or sulfuric acid. This generalization has already been evidenced by the announced construction of the new Phelps Dodge copper smelter at Tyrone, N. M., which will produce elemental sulfur from flash smelter off-gases and sulfuric acid from the converter off-gases. The modification of existing copper smelting facilities may possibly necessitate some neutralization since smelter operators indicate that at present their acid markets are already saturated. However, rather than leading to the neutralization of substantial quantities of sulfuric acid, this may stimulate more widespread leaching of copper oxide ores within the industry. This would serve as an internal outlet for sulfuric acid.

2. New zinc smelters are not likely to neutralize sulfuric acid. All currently operating domestic zinc smelters are of the custom type. Each physical plant location has been determined from an appraisal of several factors, such as access to raw materials (natural gas, concentrates, inexpensive electricity, etc.) and proximity of product markets (i.e., zinc, zinc oxide, cadmium, and sulfuric acid). All acid-producing zinc smelters will either be of the vertical retort type or the electrolytic type and not of the horizontal retort type. New zinc smelters should be physically located near sufficient acid markets and,

therefore, positive acid cost margins will prevail and it is predicted that neutralization will not be necessary.

3. New lead smelters will in all likelihood produce sulfuric acid and sell this acid at a net loss due in part to their geographical location in relationship to potential acid markets. Three of the six existing lead smelters operate acid plants and have each reported a net loss of acid sales to date. Since two lead smelters have been built since 1968, the demand for future lead smelting capacity in the near future is predicted to be low. Future technology may allow the production of elemental sulfur from sinter machine off-gases, after such an effluent has been concentrated.

In weighing the pros and cons of acid neutralization, one of the most important of all criteria, therefore, will be the economics of the sulfur and sulfuric acid market.

For the purposes of this discussion, an assumption is made that all elemental sulfur which would be produced but not marketed could be safely stored in block form in the vicinity of the smelter. Shelter could be provided so that fugitive dusting and wash-off would not occur.

The primary method for disposal of abatement-derived sulfuric acid is by neutralization with limestone. The chemical steps involved in the production and neutralization of smelter sulfuric acid follow:

1. Sulfur enters the metal-production scheme principally as a sulfide of zinc, lead, copper, and iron (i.e., ZnS, PbS, Cu_2S, and $CuFeS_2$).

2. The input sulfur is converted to sulfur dioxide, which is then contained in the smelter off-gases:

   a. Zinc roasting

   $$2ZnS + 3O_2 \rightarrow 2ZnO + 2SO_2$$

   b. Lead sintering

   $$2PbS + 3O_2 \rightarrow 2PbO + 2SO_2$$

   c. Overall copper recovery equations

   $$Cu_2S + O_2 \rightarrow 2Cu + SO_2$$

   $$2CuFeS_2 + 5O_2 \rightarrow 2Cu + 2FeO + 4SO_2$$

3. Sulfur dioxide contained in the smelter off-gases is converted to sulfuric acid:

   $$2SO_2 + O_2 \rightarrow 2SO_3$$

   $$SO_3 + H_2O \rightarrow H_2SO_4$$

4. Sulfuric acid is neutralized with limestone:

   $$H_2SO_4 + CaCO_3 \rightarrow CaSO_4 + CO_2 + H_2O + \text{other salts}$$

On a stoichiometric basis, one mole of limestone would be required to neutralize one mole of sulfuric acid; and, in turn, one mole of $CaSO_4$ would be produced. Besides the chemical production of $CaSO_4$, other salts such as $CaSO_3$ and $MgSO_4$ are formed. The $MgSO_4$, which is formed when $MgSO_3$, generally a minor constituent of limestone, reacts with sulfuric acid.

Of primary importance in the discussion of secondary pollution is the $CaSO_4/CaSO_3$ and $MgSO_4$ produced from various air pollution

control schemes. Since $CaSO_4/CaSO_3$ would be produced in large volumes as a sludge, it could produce solid waste problems if it were not marketed.

Disposal of solid waste by ponding has historically been a favorite technique in a number of industries. It is anticipated that ponding will be employed at most copper smelters which produce sulfuric acid and then neutralize this acid with limestone. The technology of pond construction and pond operation is well demonstrated. Frequently, however, waste disposal ponds are constructed and operated with less than adequate attention paid to potential water pollution effects. This is particularly true concerning the seepage of pond liquor into underground water supplies and overflow of pond liquor into surface water. Vertical and especially lateral movement of ground water can be as slow as a meter per year. As a result, it might take many years before the seepage of pond liquor into an underground water supply would be discovered by a consumer of underground water downstream from a waste disposal pond site.

Contamination of underground water supplies can be prevented, however, through the use of pond linings in the construction of waste disposal ponds. This normally ensures that the pond is impermeable to pond liquor and prevents seepage of pond liquor into underground water supplies. Generally, synthetic pond linings, such as polyvinyl chloride, polyethylene, polypropylene, synthetic

rubbers and nylons, are considered superior to natural linings composed of clay, concrete, or wood.

Contamination of surface water can be prevented by operation of waste disposal ponds with no overflow discharges of pond liquor. Closed-loop operation of a waste disposal pond permits a water balance to be maintained between the disposal pond and the limestone neutralization operation.

Winds and rainfall can also lead to contamination of surface water if the rain is permitted to run off filled waste disposal ponds which are no longer in operation. Such ponds must be protected both to prevent dusting of dried residue and to prevent the rainwater runoff from leaching soluble contaminants from the gypsum sludge. This can be accomplished through use of synthetic covers similar to pond liners, or through the use of various chemical treatments which form a hard, impermeable crust on the surface of the gypsum sludge.

With an awareness of the economics of acid neutralization, as well as the possibility of producing secondary pollution, one domestic primary copper smelting company has developed a dry limestone neutralization process.[2] The product of this method, demonstrated by means of a pilot plant study, is a solid. Approximately two to three tons of this solid neutralization product, which is a combination of gypsum and unreacted limestone, are formed for each ton of neutralized sulfuric acid. After this product is discharged to a disposal area, a hard crust forms over the material; this crust minimizes secondary pollution problems

such as dusting and rainwater runoff of contained soluble materials. Because of the high content of unreacted limestone found in the solid neutralization product, a market has not yet been found.

The American Smelting and Refining Company,[3] after performing a laboratory-scale limestone neutralization study, stated that even with a low percentage conversion of magnesium to the soluble sulfate (salt) form, a large amount of soluble material would be put out on a dump subject to rainfall. This study also attempted to define the neutralization technique, as well as the fineness of the limestone grind, which should be employed for optimal results. Two types of limestone were used, one taken from the Hayden, Arizona, area and the second from Montana. These two limestones represented, respectively, the low and high content values of magnesium, reported as 0.9% and 3.3% MgO. Two different neutralizing techniques were employed, a wet method and a dry method. With both techniques, the fineness of the limestone grind was determined to be the major parameter for providing the potential magnitude of secondary pollution. It was determined that the finer the grind, the smaller the amount of limestone required for neutralization, but the greater the solubilization of total magnesium. Magnesium solubilization was found to vary from approximately 40 to 80 percent of the total magnesium, depending upon the grind of the limestone used for neutralization. On an absolute scale, the greater weight of limestone required for the coarser grind produced a greater magnitude of solubilized magnesium. Based upon this laboratory investigation, an optimal grind produced a limestone requirement of 129 percent of stoichiometric.[4] The fine grind value,

which would be used in actual practice, could only be determined by means of both an economic and a pilot-plant study.

The disposal of potential gypsum sludge at a smelter, however, is not likely to present an unmanageable solid waste disposal problem in terms of the quantity of material to be handled; smelters currently manage large waste disposal operations for slag wastes. Though the expected waste disposal program will be large, other industries, such as the phosphoric acid industry in Florida, currently manage waste disposal operations of the same general order of magnitude as would be expected from a smelter. The following example illustrates quantities of potential solid and liquid wastes produced by acid neutralization by the wet process:

A primary copper smelter utilizes a conventional roaster-reverberatory furnace-converter pyrometallurgical process. The copper concentrate, containing 32 percent sulfur, is consumed at a rate of 1000 tons per day. Three percent of the input sulfur is discharged in slag, while the remaining 97 percent is converted to sulfur dioxide (34 percent from the roasters, 19 percent from the reverberatory furnaces, and the remaining 44 percent from the converters). SO_2 emissions from the roasters and converters are controlled by one double-absorption sulfuric acid plant. All produced acid is neutralized with 150 percent stoichiometric limestone containing $CaCO_3$ and $MgCO_3$ analyzed at 48.2 percent CaO and 3.3% MgO, respectively. If the acid plant operates at a conversion efficiency of 99.5 percent, an average of 760 tons per day of acid is produced. This quantity of sulfuric acid contains approximately

78 percent of the smelter's input sulfur. Approximately 1340 tons per day of limestone would be required for this neutralization. $CaSO_4$, $CaSO_3$, $MgSO_4$ and partially reacted limestone would account for 1510 tons per day of by-product sludge material. Of most importance is that nearly 135 tons of $MgSO_4$ could be produced during each operating day. This model copper smelter would normally produce approximately 700 tons per day of waste material (i.e., slag). Thus, with sulfuric acid neutralization, this smelter must dispose of an additional 215 percent solid waste.

As a comparison to the above illustration, a copper smelter of equal capacity employs process technology which produces strong SO_2 off-gases only. Sulfuric acid is produced from all of these off-gases and is subsequently neutralized by the method used in the preceding example. About 96.5 percent of the smelter's input sulfur will be contained in 945 tons per day of sulfuric acid. Approximately 1680 tons per day of limestone, having the same constituent values as the limestone previously used, would be required for 150 percent stoichiometric neutralization. Nearly 1860 tons per day of by-product solid material would be formed and as much as 166 tons per day of $MgSO_4$ could be produced.

Neutralization, in reality, should not produce the high magnitude of potential solid and liquid pollution indicated by the above two examples. Limestone requirements of less than 150 percent stoichiometric may be realized for some neutralization programs.[4] The value of 3.3 percent MgO used in the above illustrations is high when compared to other limestones, such as that found in Hayden, Arizona. The form that

the magnesium could take in the neutralization product is also questionable. Solubilization does occur to some extent, as indicated by the American Smelting and Refining Company's investigation. Formations of sulfites and oxides of magnesium, as well as unreacted $MgCO_3$, are possible.

Though there are potential problems with the neutralization of sulfuric acid by the wet process, solutions to those problems are available. The most desirable solution to all of the potential problems would be the consumption of the by-product gypsum in the manufacture of wallboard or other gypsum products. At present this outlet has not materialized; however, future markets for gypsum are possible.

A major problem which might be encountered in the neutralization of acid is the formation of soluble magnesium salts resulting in the degradation of surface and underground water supplies. Water quality will not be degraded by soluble magnesium salts if a closed-loop operation is employed. If an open-loop system is used, the extent to which supernatant water is recycled within the operation would be dependent upon the characteristics of the process wastes, the quantity of the waste discharge, and the magnitude of the receiving stream.[1] The disposal area can be designed so that ground water seepage of supernatant runoff is prevented. Soluble magnesium salts contained in the settling pond can also be precipitated. The addition of lime to a purge stream taken from the settling pond could maintain the pond's concentration of soluble magnesium salts at a constant level. The magnesium salts contained in this purge would be converted to insoluble magnesium hydroxide which would later settle to the bottom of the pond.

In conclusion, neutralization of abatement-derived sulfuric acid by the "wet" process may produce both land pollution and water pollution. Land pollution could occur as a result of the disposal of large quantities of calcium sulfate and calcium sulfite sludge produced during neutralization. Water pollution in the forms of chemical oxygen demand, dissolved solids, soluble magnesium (epsom) salt content, and increased water hardness could also be a result of neutralization by the "wet" process. Employing large, closed-loop settling ponds lined with minimum-permeability materials should provide maximum assurance that water pollution will be negligible. Precipitating soluble magnesium salts by the addition of lime could also minimize this potential water pollution source.

Minimum secondary pollution should arise by the usage of the "dry" acid neutralization technique.

8.1.2 Scrubbing Systems

Ammonia Scrubbing Systems--

The ammonia scrubber has been applied to off-gases of a lead sinter machine, a zinc roaster, and several sulfuric acid plants.

Basically, the process effluent containing SO_2 enters a scrubber which employs an ammonia solution as the scrubber media. This media chemically absorbs the SO_2 and the reaction products (sulfites, bisulfites, and sulfates of ammonia) are discharged as a solution at the scrubber outlet. If this salt solution were released directly to a ground water supply without prior oxidation, a chemical oxygen demand (C.O.D.) could produce an anaerobic effect on the water course. Even if the ammonium solution were completely oxidized to ammonium

sulfate prior to release, the ammonium ion has the potential of extracting oxygen from the water course. Since these ammonium salts are soluble, their addition to a water course would also increase the total dissolved solids of that course. Thus, it is extremely important from the standpoint of secondary pollution that numerous options exist for the conversion to other final scrubber products.

One proven technique involves acidifying the ammonia sulfite-bisulfite scrubber solution with concentrated sulfuric acid. Two products will be formed, a strong SO_2 gas stream and ammonium sulfate. The governing chemical equations are:

$$2NH_4HSO_3 + H_2SO_4 \rightarrow (NH_4)_2\ SO_4 + 2SO_2 + 2H_2O$$

$$(NH_4)_2\ SO_3 + H_2SO_4 \rightarrow (NH_4)_2\ SO_4 + SO_2 + H_2O$$

The SO_2 can be used for the production of sulfuric acid, liquid SO_2, or elemental sulfur. In some sections of the U. S., ammonium sulfate is a saleable fertilizer. If a limited market exists for ammonium sulfate, other ammonium salts can be produced by employing other concentrated acids in lieu of H_2SO_4. Namely, ammonium nitrate or ammonium phosphate can be produced by using nitric or phosphoric acid, respectively. Thus, if a fertilizer market does exist and the required type of acid is available in quantities necessary for the salt production, secondary pollution from this type of operation will be minimal.

To illustrate the quantities of materials involved with this scrubbing technique, the following example is presented. A primary lead smelter employs an updraft sinter machine with a split effluent. While sintering, 85 percent of the input sulfur to the sinter machine is oxidized to SO_2; 75 percent of this SO_2 is drawn off from the front

of the machine as a 6 percent SO_2 effluent, which is then converted to H_2SO_4 in a double-contact sulfuric acid plant. Tail-gas concentrations average 500 ppm SO_2. The remaining 25 percent of the generated SO_2 is removed from the rear section of the sinter machine as 0.5 percent SO_2 off-gas. This effluent, 80,000 scfm, is subjected to particulate control by means of a baghouse. The outlet particulate grain loading averages under 0.02 gr/scf. The entire weak effluent is then passed through an ammonia scrubber where 90 percent of the SO_2 is removed by the scrubber liquor. The outlet SO_2 concentration from the scrubber averages 500 ppm SO_2, or an equivalent mass emission rate of approximately 5 tons/day SO_2. The remaining 45 tons/day SO_2 are chemically contained in the ammonia sulfite-bisulfite slurry. The scrubber has been designed to produce a bisulfite-to-sulfite weight ratio of 5 to 1. On a 100 to acidify 72 tons per day of ammonia sulfite and bisulfite (12 and 60 tons/day, respectively); 55 tons/day of ammonium sulfate is produced. A strong SO_2 gas stream, which contains about 45 tons/day SO_2, is also generated during acidification. This effluent is combined with the sinter machine strong off-gases, and the combination is treated by the double-contact sulfuric acid plant. If the ammonium sulfate and the additional 30 tons/day of sulfuric acid produced from the SO_2 released by the acidification of the ammonia sulfite/bisulfite solution can be marketed, there will be no secondary pollution. If the marketability of these two products is limited, HNO_3 or H_3PO_4 can be used for the acidification step, and ammonium nitrate or ammonium phosphate, both with a concentrated SO_2 gas stream, will be the resultant products.

One U. S. sulfuric acid manufacturer employs this type scrubber for SO_2 tail gas control.[5] The initial plan was to produce marketable ammonium sulfate and SO_2 as scrubber products. After a production problem occurred which had nothing to do with the chemistry of ammonia scrubbing, the plant decided to incinerate the scrubber slurry. Upon burning this sulfite-bisulfite slurry in the plant's combustion chambers, the resulting SO_2, N_2, and water vapor combustion products returned to the sulfuric acid plant. The only economic loss derived from this burning process was the consumption of ammonia. There were no incidences of secondary pollution reported by this plant.

An ammonia scrubbing system is used at one other U. S. sulfuric acid-elemental sulfur facility.[6] Until recently, the ammonium sulfite-bisulfite-sulfate liquor was acidified with sulfuric acid, with the product 20 tons/day of ammonium sulfate marketed as fertilizer and the concentrated SO_2 effluent returned to the acid facility. Because of the limited market for ammonium sulfate, this plant currently transports its ammonium sulfate solution approximately 50 miles to a fertilizer plant where it is used in the manufacture of complex fertilizers.

Both acid producing facilities discussed above reported the formation of a large ammonium sulfate cloud (blue mist) during scrubbing. Both manufacturers remedied this secondary pollution problem by the installation of mist eliminators.[5,6]

Other techniques have been applied which either produce ammonia for recycle or allow materials to be made for marketing.[7] Ammonium bisulfite has been found to be an effective additive to sulfuric acid leaching solutions, since it reduces the cost of metallic iron used as

the precipitant.[8] Finally, the double alkali scheme, which would produce calcium sulfate as the solid waste material and ammonium hydroxide as the return solution to the ammonia scrubber, may soon be available for SO_2 control.

In summation, the salt solution produced by the ammonia scrubbing technique could produce secondary pollution; however, there are numerous methods available for the production of saleable by-products or safe disposal methods.

Sodium Sulfite-Bisulfite Scrubbing--

This system has not yet been applied to the off-gases of a primary lead, zinc, or copper smelter.

The scrubber medium for the system is a sodium sulfite-bisulfite-water solution. The SO_2 contained in the gas stream being scrubbed chemically reacts with this solution, and the final scrubbing solution is a sodium sulfite-bisulfite-sulfate-water mixture. Since the sodium sulfate contained in this mixture cannot chemically aid the scrubbing process, the sulfate content must be held constant if the scrubber effluent is to be recirculated; thus, the need for a purge stream. Generally, the sodium scrubber purge stream contains 4.5 to 5.5 percent sodium sulfate. The magnitude of this stream is dependent to some extent upon the amount of oxygen contained in the scrubbed off-gases since this oxygen will drive more sulfite and bisulfite to sulfate. If this purge stream were discharged directly to a water course, water pollution, in the forms of chemical oxygen demand and dissolved solids, could occur.[9]

One method which can be used to partially reduce the potential water pollution problems derived from the direct discharge of the

sodium-based scrubber purge is to convert most of the effluent's sodium sulfite content to sodium sulfate. This conversion is possible by the addition of sulfuric acid, or in chemical form:

$$Na_2SO_3 + H_2SO_4 \rightarrow Na_2SO_4 + H_2O + SO_2$$

$$2NaHSO_3 + H_2SO_4 \rightarrow Na_2SO_4 + 2H_2O + 2SO_2 .$$

Most of the SO_2 will emerge as a strong SO_2 gas stream. The resulting solution, containing dissolved sodium sulfate and a very small amount of sodium sulfite, will have a pH of about 1 or 2. After caustic is added and the pH is raised to about 7, the final solution can be discharged to a water course if the quantity of discharge does not present a dissolved solids water pollution problem.[9,10] Two domestic regenerative sulfuric acid facilities are using this method. Prior to scrubbing, the gas streams at both facilities contain about 4500 ppm SO_2 and 8 percent oxygen, and have gas volumes of nearly 70,000 scfm. Each final discharge stream contains approximately 20,000 pounds per day sodium sulfate (reported as sulfate) and 100 pounds per day sodium sulfite (reported as sulfite). The equivalent effluent flow rate from each site is nearly 8 gallons per minute, part of which is water dilution which ensures the retention of sodium sulfate in solution while processing.

In some instances of SO_2 control by the usage of sodium-based scrubbing systems, the discharge of the scrubber purge to a water course, even after acidification, could produce dissolved solids water pollution. Various techniques to remedy this potential pollution problem are currently being formulated and evaluated by vendors and current, as well as potential, users of this scrubbing system.

The sodium-based double-alkali scrubbing process is one of these techniques.[11] This technique involves the removal of SO_2 from a process off-gas by means of the sodium scrubbing method. The purge solution, composed of sulfites, bisulfites, and sulfates of sodium, is then treated with lime or limestone to remove, as a precipitate, solid calcium sulfites and sulfates and to regenerate sodium hydroxide and sodium sulfite in solution. Thus, an essentially insoluble solid product will be formed and can be disposed of as a solid waste, and a liquid effluent can be returned to the scrubber for reuse. No secondary water pollution problems should occur.

An existing domestic zinc smelter is currently evaluating the applicability of various SO_2 scrubbing systems to its process effluents.[12] When theoretically applying a sodium-based system to the acid plant tail gas and sinter machine effluent, potential water pollution problems derived from the scrubber purge stream were realized. Since the oxygen content of the sinter machine off-gases is nearly that of ambient air, an assumption was made by the company that a greater than 90 percent oxidation rate of sodium sulfite to sulfate could occur. This high rate would produce a "once through" system with a very large sodium salt solution disposal problem. When applying the sodium system to the acid plant tail gas containing approximately 6 percent oxygen and having a flow rate of about 80,000 scfm, a purge stream of 35 gallons/minute containing nearly 21 pounds/minute of sodium sulfate was calculated. Since local restrictions will not allow the release of this quantity of purge to the local water course, company engineers are attempting to remedy this potential disposal problem by development of a suitable disposal system.

A recently designed system, which is currently being evaluated at the bench level, employs the following approach. The entire purge stream is first sent to a holding tank. The purge then proceeds to a thickener, where a lime solution is blended. The underflow from this thickener is then sent to a gasifier where pure SO_2 is added. This causes all of the calcium to be in solution as calcium bisulfite. The solution is then stripped, and the calcium precipitates out as a sulfate while the sodium remains in solution as a bisulfite. This stripping reaction is shown below:

$$Na_2SO_4 + Ca(HSO_3)_2 \rightarrow CaSO_4(\downarrow) + 2NaHSO_3$$

The calcium sulfate can be disposed of as a solid and the sodium bisulfite solution can be recycled to the scrubber absorber. The company states that there are no liquid discharges from this closed-loop operation. This system can be considered a form of double-alkali scrubbing.

One application of a sodium-based scrubbing system is currently under construction at a midwestern United States electrical power generation site.[13] The inlet gas stream to the scrubber contains 2200 ppm SO_2 and has a volumetric flow rate of about 300,000 scfm. Approximately 150 gallons/minute of recycled stream will be removed from the sodium absorber and will be sent to an evaporator. Within this evaporator, steam will strip the solution, and a SO_2 effluent with an approximate strength of 85 percent will be liberated. This strong SO_2 gas stream will be used for the production of elemental sulfur. A purge stream of about 15 gallons/minute will be removed from the evaporator and then sent to a crystallizer unit. Chilling of the purge stream in the crystallizer unit will cause the contained sodium sulfate to

selectively crystallize. The remainder of the purge stream, which will principally contain sodium sulfite, will be recycled to the evaporator. The final crystallized salt will contain 70 percent sodium sulfate and 11 percent sodium thiosulfate, and the remainder will be sodium sulfite. This crystallized salt will then be sent to a conventional pulp mill, where it will be used as a chemical make-up. One possible chemical make-up application is with black (spent) liquor in a recovery boiler. Smelt (molten salt), composed principally of sodium sulfide and sodium carbonate, is removed from the bottom of the recovery boiler. This mixture is then dissolved in a water tank and treated with lime. The final solution, termed "white liquor," is a combination of sodium hydroxide and sodium sulfide and is commonly used to produce pulp from wood chips. "Black liquor" is the solution that results from this pulping operation. Therefore, one "secondary pollution free" application of the purge stream from the sodium scrubber is available.

In summation, the purge stream from the sodium-based scrubbing system has the potential to produce water pollution through C.O.D. and dissolved solids when discharged without treatment to a water course. Current practice is the acidification of this purge, with the resultant discharge solution containing nearly all sodium sulfate, thus eliminating the possibility of C.O.D. All interested parties are presently attempting to develop a method to safely consume or dispose of this purge. Double-alkali shows promise as an adequate disposal method. Usage of the crystallized form of the purge in the conventional pulp mill may also prove to be a viable approach.

Dimethylaniline (DMA) Scrubbing --

The dimethylaniline scrubbing technique has been successfully applied to a portion of the sinter machine off-gases of a domestic lead smelter (no longer operating) and a segment of the process gas streams of a domestic copper-pyrite operation. The DMA system will shortly be used to concentrate the SO_2 contained in the converter effluent at one domestic copper smelter and a combination of the reverberatory furnace and converter effluents at a second copper smelter.

Basically, the gas stream which is to be scrubbed enters a three-section scrubbing tower. The effluent first makes contact with the DMA in the lower section of the scrubber. The DMA chemically removes a majority of the SO_2 contained in the gas stream. The effluent next passes through the second section of the tower which contains a dilute sodium carbonate scrubbing solution. This solution removes most of the remaining SO_2, as well as entrained DMA, from the effluent; the sodium carbonate is converted to sodium sulfite and bisulfite. The third section of the tower contains a dilute sulfuric acid solution, which removes, as DMA sulfate, any dimethylaniline vapors contained in the gas stream. The gas stream, scrubbed of SO_2 and DMA, is then released to the atmosphere. The liquid effluents from the second and third sections of the tower empty into a collection tank. DMA is separated from the solution in a regenerator. The regenerator reaction products between the DMA sulfate and the sodium sulfite-bisulfite are free DMA (which is recycled back to the tower), SO_2, and sodium sulfate. The resulting purge stream contains mostly dissolved solids, in the form of sulfates and sulfites of sodium, and trace amounts of DMA.

The volume of this solution and its sodium salt content are principally dependent upon DMA plant capacity, the DMA scrubbing tower operating temperature, and the SO_2 content of the treated gas stream. The pH of the waste stream is maintained between 5 and 6. If the pH were to fall below 5, a larger amount of DMA would be lost to the purge stream, whereas if the pH were to rise on the basic side of 6, the effluent would contain a greater amount of sodium sulfite. The pH of the system can easily be maintained between five and six.[14]

To illustrate the approximate magnitude of waste effluent which the DMA process could produce, assume that the absorption (scrubbing) tower operating temperature is 30°C. If the gas stream being scrubbed contains 5 percent SO_2, by volume, approximately 40 pounds of Na_2SO_4 is formed in solution per ton of SO_2 recovered. If the SO_2 concentration were 0.5 percent, with all other factors being equal, approximately 400 pounds of Na_2SO_4 would be formed in solution for each recovered ton of SO_2.[15]

This effluent is not recycled. If it were discharged directly to a water course without prior treatment, the possibilities of water pollution by means of C.O.D. and dissolved solids could exist. Because DMA is an organic compound, it is assumed that the DMA in high concentrations could also produce water pollution.

A primary lead smelter, which was closed in late 1969, employed DMA on part of its sinter effluent and discharged its DMA waste stream directly to a sewer without prior treatment. This plant was located near tidal (saline) waters and the DMA discharge presumably did not produce secondary pollution.[14,15] This same DMA unit is currently

operating on an effluent from a sulfur burner; the purge is discharged directly to the tidal waters, with no indications of secondary pollution.[16]

One existing smelter which utilizes two DMA units to produce liquid SO_2 will shortly initiate the construction of a water purification system which will be a form of double alkali.[17] The purge stream from the two DMA units has a flow rate varying from 20 to 25 gallons/minute. This effluent has the following average analysis:

25 ppm DMA

45,000 ppm dissolved solids (principally as sulfates and sulfites of sodium)

18 ppm suspended solids

5.8 pH

The purge will first pass through an activated carbon filter to remove DMA, and the outlet concentration of DMA after filtering will be less than 5 ppm. The solution will then join other plant effluents, all of which will then be neutralized with lime. Calcium sulfate and sulfite will precipitate out and the solid will be sent to an impoundment area, from which the final effluent will be discharged to a local river. The company anticipates that the spent activated carbon can be safely land-filled in enclosed containers.

An existing domestic primary copper smelter is currently constructing a DMA unit, which will concentrate the SO_2 contained in a portion of the smelter's converter effluent.[14,15] The waste by-product effluent from the DMA unit is planned to be used for cooling of converter gases in a balloon flue (this should reduce SO_3 formation) and as a gas stream conditioner prior to electrostatic precipitation. It is anticipated

that most of the waste solution will become a component of the electrostatic precipitator dust, which will be shipped to a lead smelter for further processing.

A DMA unit is currently being "lined-out" at another domestic primary copper smelter.[18] This smelter is integrated in that it produces both copper concentrate and blister copper on-site. The purge stream from the DMA unit will vary between 30 and 50 gallons per minute, depending on the gas stream being treated by the unit. The pH of the purge stream will be maintained between 5 and 6 and, under normal operating conditions, will contain approximately 0.15 ml DMA/l of purge (150 ppm DMA, by volume). This effluent will combine with nearly 4500 gallons per minute of tailings flow from the copper concentrating operation. The entire flow will then proceed to the tailings pond area. Water in these ponds is recirculated back to the concentrating department, thus providing a closed-loop effluent operation. During a one- to two-day period of each month, the concentrator will not operate, and the DMA purge effluent will proceed to a special waste pond. No recirculation will occur from this pond. The concentration of DMA contained in the purge stream will be visually controlled by the DMA plant operator. (With low concentrations of DMA, the effluent is colorless, whereas if the DMA content is excessive, the effluent color becomes purple.) The company states that no secondary pollution from this purge stream is anticipated.

In summation, the DMA purge stream contains mostly sodium sulfate and sulfite with trace quantities of DMA. If this effluent were released directly to a water course, the possibility of water pollution

by means of C.O.D., dissolved solids, or DMA content could exist. Since, as shown by the text of this section, various means for minimizing secondary pollution exist, or have adequately demonstrated potential, DMA should not provide a secondary means for contamination of the environment.

Calcium-Based Scrubbing Systems--

This type of SO_2 control device has not been directly applied to effluents of the primary domestic lead, zinc, and copper industries.

Basically, a gas stream containing SO_2 is scrubbed with a lime or a limestone slurry; the clean gases are released to the atmosphere while the SO_2 -laden slurry is split with one portion flowing to a pump tank and the other portion going to a settler. This settler, in most situations, would be a settling pond. Ideally, calcium sulfite and calcium sulfate are precipitated out in the settler as a solid by-product which can be disposed of easily and the liquid effluents from both the pump tank and the settler are recirculated back to the scrubber.

As was discussed in 4.3.1, scaling may produce operation problems within the system. One method currently used to reduce the amount of scaling is to discharge to a local water course a portion of the liquid effluent from the scrubber. Water pollution derived by this discharge is possible. This liquid discharge would invariably contain calcium and magnesium as unreacted carbonates, various sulfates and chlorides of calcium and magnesium, and possibly dissolved salts of trace metals which were contained in the scrubbed gas stream. Thus, in discharging this effluent directly to a water course, the possibility of water pollution by means of dissolved solids, chemical oxygen demand, and increased hardness of water can exist. Other pollution produced by the

release of soluble magnesium salts, as well as salts of various trace metals, is possible. If this effluent discharge were to produce water pollution, water purification methods would have to be utilized prior to the discharge.

Calcium-based systems of the future will be designed in such a fashion that closed-loop operation can be practiced.[1] With this type of operation, the possibility of water pollution by means of the direct discharge of the scrubber effluent to a local water course will be minimal. For this analysis, it will be assumed that the calcium-based scrubber has been designed to compensate for the problems derived from scaling. Since there will be no discharge to local waters and since the liquid effluent will be in a closed circuit within the scrubbing system, one would expect the various concentration of materials contained in the scrubber slurry to build up with time. Secondary pollution which would be produced by such a system would now be that of solid waste: the disposal of the calcium sulfate and calcium sulfite sludge. This sludge material will contain a large amount of water, the relative magnitude of which would depend almost solely upon economics. Pilot plant studies of calcium-based systems have thus far indicated that this sludge, after dewatering, has the consistency of toothpaste. Final disposal of the material with such a consistency is difficult. The underlying problem which causes the retention of large amounts of water by the calcium-sulfate-sulfite material is its crystalline structure. Initial investigations for determination of the optimum crystal structure for minimal water retention has indicated that large crystals of calcium sulfate are desirable.[19]

Assuming that the calcium-based systems which may be used in the future on primary metallurgical gas streams for sulfur dioxide control will have closed-loop effluents, the potential of water pollution by means of direct discharge of the effluent will be minimal. Ponding capacity and structure will have to be designed in order to insure minimum water pollution potential by means of seepage and runoff. Optimal crystalline structure will have to be determined to insure that the calcium sulfate-sulfite sludge formed by this scrubber can be easily and economically dewatered, thus allowing the final disposal or commercial usage of this solid by-product.

8.2 ENERGY IMPACT

Summary--

The impact of the proposed NSPS on the energy requirements associated with the production of copper, zinc and lead will, in most cases, be minimal. Since the proposed NSPS will encourage the domestic smelting industry to abandon existing smelting technology in favor of newer smelting technology, the impact of the NSPS can only be analyzed by comparing the energy requirements of the new smelting technology with emission control to the energy requirements of conventional domestic smelting technology without emission controls. Since compliance with the NAAQS by new smelters will also in most cases encourage the domestic smelting industry to abandon existing smelting technology in favor of newer smelting technology (see Section 6 - Summary), the incremental impact of the NSPS over compliance with the NAAQS can be analyzed by comparing the energy requirements of the different emission control systems which would be utilized in each case.

On the basis that only one of the two or three new copper smelters which are likely to be constructed by 1980 will employ electric smelting and the remaining one or two will employ flash smelting, the overall impact of the NSPS will result in a net decrease of some 10-20% in the energy requirements associated with the copper produced by these smelters. This is in comparison with the energy requirements that would be associated with the copper produced by these smelters if they employed conventional domestic smelting technology and incorporated no emission controls.

With regard to zinc and lead smelters, the impact of the proposed NSPS would result in an increase in the energy requirements associated with the production of zinc and lead by about 1-5% and 5-10%, respectively. This again is in comparison with the energy requirements that would be associated with the production of zinc and lead if the zinc and lead were produced in smelters employing conventional domestic technology and incorporating no emission controls.

The incremental impact of the proposed NSPS on the energy requirements associated with the production of copper, zinc and lead over that of compliance with the NAAQS is minimal. In most cases, the difference in the energy requirements associated with double-absorption sulfuric acid plants over those associated with single-absorption sulfuric acid plants essentially represents this incremental impact. Although double-absorption sulfuric acid plants require about 15% more energy to operate than single-absorption sulfuric acid plants, the incremental impact in terms of the increase in the overall energy requirements associated with the production of a unit of copper, zinc or lead is only about 2%.

General Discussion--

The energy requirements associated with most conventional metallurgical extraction processes are quite high. The production of aluminum, for example, is one of the most energy-intensive metallurgical extraction processes and requires in the range of 70,000-90,000 BTU per pound of aluminum[20] The energy requirements associated with the production of copper, zinc and lead are considerably less than this, although still significant in comparison. Conventional reverberatory furnace smelting as used by the domestic copper industry, for example, requires in the range of 10,000-20,000

BTU per pound of copper, and the smelting of zinc and lead by the domestic primary smelting industry requires in the range of 20,000-40,000 BTU per pound of zinc and about 10,000 BTU per pound of lead.[21]

Evaluation of the impact of the proposed NSPS in terms of the increased energy requirements associated with the production of copper, zinc, and lead involves not only an examination of the energy requirements of the emission control systems required to comply with the NSPS, but also an examination of the energy requirements of the basic smelting processes. As discussed in Sections 6 and 7, compliance with the proposed NSPS will in most cases require the adoption of different smelting processes by the domestic copper smelting industry and, to some extent, by the domestic lead smelting industry. Specifically, the proposed NSPS will encourage the domestic primary copper smelting industry to abandon reverberatory smelting furnaces in favor of flash or electric smelting furnaces, and the domestic primary lead smelting industry to abandon conventional sintering machines in favor of sintering machines employing gas recirculation.

Tables 8-2, 8-3 and 8-4, therefore, summarize not only the energy requirements associated with the emission control systems required to comply with the proposed NSPS for copper, zinc and lead smelters, but also the energy requirements associated with the various smelting processes. The energy requirements shown in these tables are taken from detailed energy balances developed by EPA, which are included in this document as Appendix IV.

The energy requirements associated with the emission control systems in Tables 8-2, 8-3 and 8-4 are based on the use of DMA scrubbing on weak

Table 8-2 Emission Control Energy Requirements

	Copper Smelting				
	Reverberatory Smelting		Electric Smelting		
	Green Charge	Calcine Charge	Green Charge	Calcine Charge	Flash Smelting
I. Basic Process					
Energy Requirements, M BTU/lb copper	15.3	9.2	15.5	10.0	5.7
II. Emission Control					
Model No.	IV(b)	III(b)	I(b)	—	II(b)
Overall Control, %	70	80	99.5	99.5	99.5
Energy Requirements, M BTU/lb copper					
Acid production	0.9	1.0	1.4	1.4	1.3
Acid neutralization	0.4	0.5	0.6	0.6	0.6
Model No.	—	—	I(c)	—	II(c)
Overall Control, %	—	—	99.5	—	99.5
Energy Requirements, M BTU/lb copper					
Elemental sulfur production	—	—	7.5	—	7.8
Model No.	IV(c)	III(c)	—	—	—
Overall Control, %	98.5	98.5	—	—	—
Energy Requirements, M BTU/lb copper					
Acid production	2.0	1.6	—	—	—
Acid neutralization	0.6	0.6	—	—	—
III. Total (Process & Emission Control)					
Model No.	IV(b)	III(b)	I(b)	—	II(b)
Overall Control, %	70	80	99.5	99.5	99.5
Energy Requirements, M BTU/lb copper					
Acid production/acid neutralization	16.0/16.4	10.3/10.7	16.9/17.5	11.4/12.0	7.0/7.6
Model No.	—	—	I(c)	—	II(c)
Overall Control, %	—	—		—	
Energy Requirements, M BTU/lb copper					
Elemental sulfur production	—	—	23.0	—	13.5
Model No.	IV(c)	III(c)	—	—	—
Overall Control, %	98.5	98.5	—	—	—
Energy Requirements, M BTU/lb copper					
Acid production/acid neutralization	17.1/17.7	10.9/11.5	—	—	—

Table 8-3 Emission Control Energy Requirements

Zinc Smelting

	Electrolytic Extraction	Pyrometallurgical Reduction Electrothermic	Pyrometallurgical Reduction Vertical Retort
I. Basic Process			
Energy Requirements, M BTU/lb Zinc	20	34	39
II. Emission Control			
Model No.	II(b)	I(b)	I(b)
Overall Control, %	99.5	96.5	96.5
Energy Requirements, M BTU/lb Zinc			
Acid production	0.5	0.5	0.5
Acid neutralization	0.3	0.3	0.3
Model No.	II(c)	I(d)	I(d)
Overall Control, %	99.5	96.5	96.5
Energy Requirements, M BTU/lb Zinc			
Elemental sulfur production	6.3	6.3	6.3
III. Total (Process & Emission Control)			
Model No.	II(b)	I(b)	I(b)
Overall Control, %	99.5	96.5	96.5
Energy Requirements, M BTU/lb Zinc			
Acid production/acid neutralization	20.5/20.8	34.5/34.8	39.5/39.8
Model No.	II(c)	I(d)	I(d)
Overall Control, %	99.5	96.5	96.5
Energy Requirements, M BTU/lb Zinc			
Elemental sulfur production	26.5	40.3	45.3

Table 8-4 Emission Control Energy Requirements
Lead Smelting

	Conventional Sintering	Gas Recirculation Sintering
I. Basic Process		
Energy Requirements, M BTU/lb Lead	10	10
II. Emission Control		
Model No.	I(b)	II(b)
Overall Control, %	68.5	91.0
Energy Requirements, M BTU/lb lead		
Acid production	0.25	0.45
Acid neutralization	0.15	0.20
Model No.	—	II(d)
Overall Control, %	—	91.0
Energy Requirements, M BTU/lb lead		
Elemental sulfur production	—	2.7
Model No.	I(c)	—
Overall Control, %	89.0	—
Energy Requirements, M BTU/lb lead		
Acid production	1.15	—
Acid neutralization	0.20	—
III. Total (Process + Emission Control)		
Model No.	I(b)	II(b)
Overall Control, %	68.5	9.0
Energy Requirements, M BTU/lb lead		
Acid production/acid neutralization	10.2/10.3	10.5/10.7
Model No.	—	II(d)
Overall Control, %	—	91.0
Energy Requirements, M BTU/lb lead		
Elemental sulfur production	—	12.8
Model No.	I(c)	—
Overall Control, %	89.0	—
Energy Requirements, M BTU/lb lead		
Acid production/acid neutralization	11.1/11.3	—

off-gas streams (<3.5% SO_2) and double-absorption sulfuric acid plants on strong off-gas streams (>3.5% SO_2); or the use of DMA scrubbing on high-oxygen off-gas streams (>5% O_2) and elemental sulfur plants on low-oxygen off-gas streams (<5% O_2). The energy requirements associated with limestone neutralization of sulfuric acid consider only the energy required for crushing and grinding of the limestone and that required for the neutralization of sulfuric acid. The energy required for mining of the limestone and transportation of the limestone from the mine site to the smelter are not included.

With regard to the energy consumption or the various emission control systems, the production of elemental sulfur requires considerably more energy than the production of sulfuric acid, even if the acid must be neutralized. As shown by Tables 8-2, 8-3 and 8-4, the production of elemental sulfur requires from 4 to 6 times the energy required for the production of sulfuric acid per pound of copper or lead, and from 8 to 12 times the energy required for the production of sulfuric acid per pound of zinc. Although these numbers are quite sensitive to the overall processing sequence utilized to produce elemental sulfur and they reflect the fact that elemental sulfur plants require tail-gas scrubbing to comply with the proposed NSPS, there is no doubt that elemental sulfur plants require more energy than sulfuric acid plants.

It is the consumption of large quantities of fossil fuels such as natural gas that results in the large energy requirements associated with elemental sulfur plants. Neglecting the electrical energy requirements, elemental sulfur plants of the Allied Chemical type (see Section 4.2)

require about 0.6 volume of methane per volume of sulfur dioxide reduced to elemental sulfur, even when reducing off-gases of low oxygen content (<0.5% O_2).[22] This is equivalent to an energy consumption of about 6.5 MM BTU per ton of sulfur dioxide reduced. Double-absorption sulfuric acid plants, however, normally require little or no fuel (see Section 4.3), and thus the energy requirements associated with the production of sulfuric acid are solely electrical energy requirements to operate pumps, blowers and other process equipment. As a result, only about 150 KWH of electrical energy are required per ton of sulfur dioxide converted to sulfuric acid.[23] This is equivalent to only about 1.5 MM BTU per ton of sulfur dioxide.

In comparison with the difference in energy requirements associated with elemental sulfur plants and double-absorption sulfuric acid plants, the difference in energy requirements associated with double-absorption acid plants and single-absorption acid plants is quite small. Where double-absorption acid plants require about 150 KWH of electrical energy per ton of sulfur dioxide converted to sulfuric acid, single-absorption acid plants require about 130 KWH of electrical energy per ton of sulfur dioxide converted to sulfuric acid.[23] This is a difference of only about 15%.

The energy requirements associated with off-gas scrubbing systems per unit of sulfur dioxide recovered can vary widely, ranging from the levels cited above for sulfuric acid plants to those cited above for elemental sulfur plants, or even higher. This is due to the fact that the energy requirements associated with off-gas scrubbing systems are

basically a function of the total volume of gases treated, rather than the amount of sulfur dioxide recovered. Consequently, when off-gases containing low concentrations of sulfur dioxide are treated, the associated energy requirements per unit of sulfur dioxide recovered are extremely high, and when off-gases containing high concentrations of sulfur dioxide are treated, the associated energy requirements per unit of sulfur dioxide recovered are considerably lower.

DMA scrubbing, for example, requires only about 110 KWH per ton of sulfur dioxide recovered when treating off-gases of 5% sulfur dioxide, but requires about 940 KWH per ton of sulfur dioxide recovered when treating off-gases of 0.5% sulfur dioxide.[24] Thus, when used to treat off-gas streams similar to those that could be treated by sulfuric acid plants, DMA scrubbing requires about the same amount of energy as a sulfuric acid plant. However, when used to treat off-gases with low concentrations of sulfur dioxide, the energy requirements per unit of sulfur dioxide recovered increase by as much as an order of magnitude.

In terms of the impact of the proposed NSPS on the energy requirements associated with the production of copper, zinc and lead, the data summarized in Tables 8-2, 8-3 and 8-4 indicate that the NSPS should have little impact. With regard to copper smelting, the proposed NSPS would increase the energy requirements associated with conventional domestic reverberatory furnace smelting from 9,000-15,000 BTU per pound of copper to 10,000-16,000 BTU per pound of copper, with or without neutralization of the sulfuric acid produced. This represents an increase of only 5-10%.

However, as indicated in Sections 6 and 7, the impact of the emission control costs associated with the proposed NSPS will encourage the domestic copper smelting industry to abandon reverberatory furnace smelting and adopt electric furnace or flash furnace smelting. The energy requirements associated with electric furnace smelting are comparable to those associated with reverberatory furnace smelting and are in the range of 10,000-16,000 BTU per pound of copper. The impact of the proposed NSPS would increase these energy requirements to 12,000-17,000 BTU per pound of copper, which represents an increase of 10-20%.

The energy requirements associated with flash furnace smelting, however, are considerably less than those associated with reverberatory furnace or electric furnace smelting (see Section 3), and are in the range of only 5,000-6,000 BTU per pound of copper. The impact of the proposed NSPS would increase these energy requirements to about 7,000-7,500 BTU per pound of copper. Since the energy requirements of flash furnace smelting are considerably lower than those of either reverberatory furnace or electric furnace smelting, this represents an increase of 25-35%.

To analyze the actual impact of the proposed NSPS, however, the overall energy requirements associated with the production of a unit of copper under the NSPS should be compared with the energy requirements associated with the production of a unit of copper in conventional domestic smelters before the advent of air pollution control regulations, and with the energy requirements associated with the production of a unit of copper in a new smelter under the NAAQS (National Ambient Air Quality Standards).

From the point of view of the impact of the proposed NSPS on the energy requirements associated with the production of a unit of copper before the advent of air pollution control regulations, the data in Table 8-2 indicate that this impact depends on whether electric furnace smelting or flash furnace smelting is utilized in place of reverberatory furnace smelting. In those cases where electric smelting furnaces are utilized, the impact of the proposed NSPS would be to increase the net energy requirements associated with the production of a pound of copper by from 10 to 30%, depending on whether the smelter employed a green charge furnace or calcine charge furnace. In those cases where flash smelting furnaces are utilized, the impact of the proposed NSPS would be to decrease the net energy requirements associated with the production of a pound of copper by from 15 to 55%, depending on whether a calcine charge or green charge reverberatory furnace would have been employed.

As a result, in terms of assessing the impact of the proposed NSPS on the energy requirements associated with the production of a unit of copper for the domestic copper smelting industry as a whole (in comparison with the energy requirements before the advent of air pollution control regulations), both the number of new smelters and the types of smelting technology they will emplov need to be projected. As discussed in Section 6, from two to three new copper smelters are likely to be constructed within the United States by 1980, depending on the possible closure of the Phelps Dodge Douglas, Arizona, smelter. Projecting the type of technology these smelters will employ, however, is somewhat more difficult. This would involve an analysis to project the composition of the copper concentrates and the amount of cement copper and secondary

copper scrap to be smelted, and the likely location of each of these new smelters to determine the availability of electrical power and various cost parameters. An analysis such as this is beyond the scope of this report.

However, from the review of the various smelting technologies undertaken by EPA's engineers in the development of this document, the general consensus is that, in most cases, flash smelting appears more attractive than electric smelting, in a major part due to the significantly lower energy requirements associated with flash smelting over electric smelting. Only in those cases where the various limitations of flash smelting come into play (see Section 3) is electric smelting likely to be more attractive. Consequently, it appears to EPA that flash smelting will be employed at most new copper smelters, and of the two or three new smelters that are likely to be built by 1980, only one might possibly employ electric smelting. On this basis, the overall impact of the NSPS will result in a net decrease in the energy requirements associated with the copper produced by these new copper smelters by some 10-20%.

From the point of view of the impact of the proposed NSPS on the energy requirements associated with the production of a unit of copper at a new copper smelter, compared to the impact of compliance with the NAAQS, indications are that the incremental impact of the NSPS over that of the NAAQS will be minimal. As discussed in Section 6, most of the states in which copper smelters currently operate have submitted to EPA SIP's (State Implementation Plans) to attain and maintain the NAAQS, which include regulations limiting sulfur dioxide emissions from new copper smelters to

10% or less of the input sulfur to the smelter. The impact of these regulations will be the same as that of the proposed NSPS in terms of encouraging the domestic copper smelting industry to abandon reverberatory smelting furnaces and adopt electric smelting or flash smelting furnaces (see Section 6). As a result, the incremental impact of the proposed NSPS above the NAAQS will be minimal and will reflect the use of double-absorption sulfuric acid plants over single-absorption sulfuric acid plants. Although, as mentioned earlier, double-absorption sulfuric acid plants require about 15% more energy to operate than single-absorption sulfuric acid plants in terms of the overall energy requirements associated with the production of a unit of copper, the incremental impact of the NSPS over compliance with the NAAQS represents only a 2% increase in energy requirements.

With regard to the impact of the proposed NSPS on primary zinc and lead smelters, Tables 8-3 and 8-4 indicate the NSPS will increase the energy requirements associated with the production of a pound of zinc or lead by about 1-5% for zinc smelters and about 5-10% for lead smelters, compared to the energy requirements associated with the production of zinc and lead if the smelter were uncontrolled.

Also, as with those states in which copper smelters currently operate, those states in which zinc and lead smelters currently operate have submitted to EPA SIP's to attain and maintain the NAAQS, which include regulations limiting sulfur dioxide emissions to 10% or less of the input sulfur to the smelter, or in some cases, to 500 ppm or less. Consequently, as with the proposed NSPS for copper smelters, there will be little or no incremental impact of the proposed NSPS for zinc and lead smelters above that of the NAAQS in terms of increasing the energy requirements associated with the production of a unit of zinc or lead.

REFERENCES FOR SECTION 8

1. Morris, J.S. Potential Water Quality Problems Associated with Limestone Wet Scrubbing for SO_2 Removal from Stack Gas. Prepared for Presentation at Second International Lime/Limestone Wet Scrubbing Symposium, New Orleans, Louisiana, Nov. 8-12, 1971, p. 300.

2. Thompson, G.S., Jr. Personal communications from Mr. Maddin, Kennecott Copper Corp., Hurley, N.M., April 24, 1973, U.S. EPA, RTP, N.C.

3. Plaks, N. Personal communications from Mr. J.M. Henderson, ASARCO, South Plainfield, N.J., March 13, 1972, U.S. EPA, RTP, N.C.

4. Process Research, Inc. Neutralization of Abatement-Derived Sulfuric Acid. EPA-R2-73-187. April 1973.

5. Thompson, G.S., Jr. Personal communications from Mr. J. Bland, Allied Chemical Corp., Newell, Pa., May 24, 1973, U.S. EPA, ESED, SDB, RTP, N.C.

6. Thompson, G.S., Jr. Personal communications from Mr. Munson, Olin Corporation, Beaumont, Texas. May 25, 1973, U.S. EPA, ESED, SDB, RTP, N.C.

7. Slack, A.V. Sulfur Dioxide Removal from Waste Gases 1971. Noyes Data Corp., Park Ridge, N.J., pp. 114-131.

8. McNally, R.J., Spedden, H.R., and Apps, J.A. Sulfur, Sulfuric Acid, and Pollution Problems, Part I: The Treatment of Mine Waters with Acid Bisulfite. Presented at AIChE Sixty-Third Annual Meeting, Chicago, Ill., Nov. 29 - Dec. 3, 1970, p. 16.

9. Thompson, G.S., Jr. Personal communication from Mr. J. Osborne, Davy Power Gas, Lakeland, Florida. June 5, 1973, U.S. EPA, ESED, SDB, RTP, N.C.

10. Thompson, G.S., Jr. Personal communication from Mr. H.T. Emerson, Olin Corporation, Paulsboro, N.J. June 5, 1973, U.S. EPA, ESED, SDB, RTP, N.C.

11. Draemel, D.C. Regeneration Chemistry of Sodium-Based Double-Alkali Scrubbing Process. EPA-R2-73-186, March 1973, p. 5.

12. Thompson, G.S., Jr. Personal communication from Mr. G. Welch, St. Joe Minerals Corp., Monaca, Pa. June 6, 1973. U.S. EPA, ESED, SDB, RTP, N.C.

13. Thompson, G.S., Jr. Personal communication from Mr. R. Chrisman, U.S. EPA, CSD, RTP, N.C. June 6, 1973, U.S. EPA, ESED, SDB, RTP, N.C.

14. Thompson, G.S., Jr. Personal communication from Mr. J.M. Henderson, ASARCO, South Plainfield, N.J. June 7, 1973, U.S. EPA, ESED, SDB, RTP, N.C.

15. Farmer, J.R. Personal communication from Mr. J.M. Henderson, ASARCO, South Plainfield, N.J. March 15, 1973, U.S. EPA, ESED, SDB, RTP, N.C.

16 Thompson, G.S., Jr. Personal communication from Mr. Rue, Virginia Chemicals, Portsmouth, Va. June 8, 1973, U.S. EPA, ESED, SDB, RTP, N.C.

17. Thompson, G.S., Jr. Personal communication from Mr. S.L. Norwood, Cities Service Company, Copperhill, Tenn. June 7, 1973, U.S. EPA, ESED, SDB, RTP, N.C.

18. Thompson, G.S., Jr. Personal communication from Mr. J.E. Foard, Phelps-Dodge Corp., Ajo, Arizona. June 7-8, 1973, U.S. EPA, ESED, SDB, RTP, N.C.

19. Thompson, G.S., Jr. Personal communication from Mr. J.S. Morres, TVA, Chattanooga, Tenn. June 13, 1973, U.S. EPA, ESED, SDB, RTP, N.C.

20. Air Pollution Control in the Primary Aluminum Industry; A study done for EPA by Singmaster & Breyer, New York, N.Y.; Contract No. CPA 70-21; July 23, 1973.

21. See Appendix IV.

22. W.D. Hunter and J.C. Fedoruk; Application of Technology for SO_2 Reduction to Sulfur in Emission Control Systems; Paper presented at Antinquinamento '72 - Milan Trade Fair; Milan, Itay; Nov. 17, 1972.

23. Based on an off-gas stream composition of 6% SO_2. See Section 6.

24. See Section 6.

APPENDIX I

Material Balances for Model Smelters

Figure I-1. Model copper facility - Case I(a), material balance

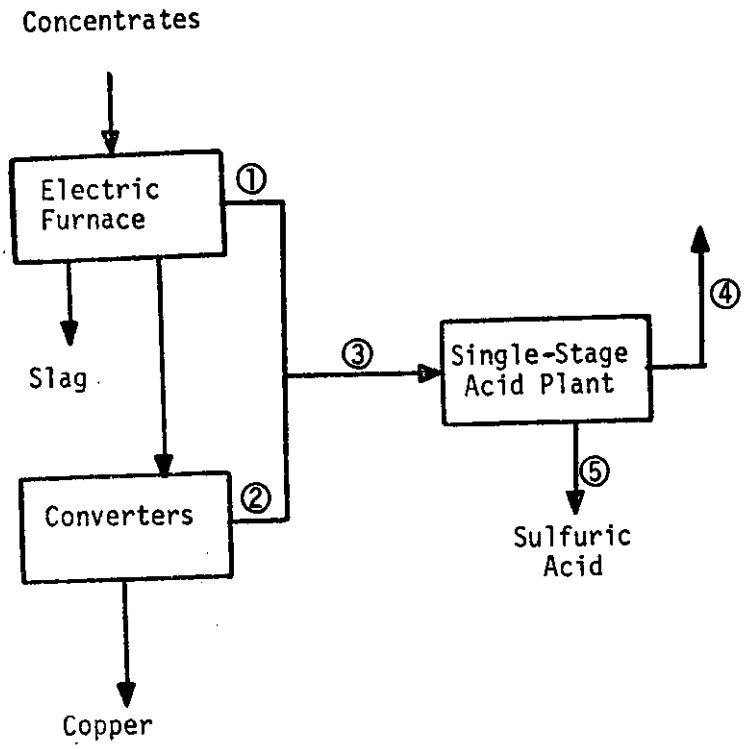

	①	②				
hr/day	24	5	11	2	5	1
SCFM	24,100	61,600	30,800	32,100	62,900	-
% SO_2	6	7	7	10.5	8.75	-
% O_2	15	10.5	10.5	10.5	10.5	-

	③				
hr/day	5	11	2	5	1
SCFM	85,700	54,900	56,200	87,000	24,100
% SO_2	6.75	6.5	8.5	8	6
% O_2	11.75	12.5	12.5	11.75	10

	④					⑤
hr/day	5	11	2	5	1	24
SCFM	77,200	49,600	49,100	76,700	22,000	
% SO_2	0.20	0.20	0.20	0.20	0.20	
% O						
H_2S						927 TPD (100%)

Figure I-2 Model Copper Smelting - Material Balance for Case I(b)

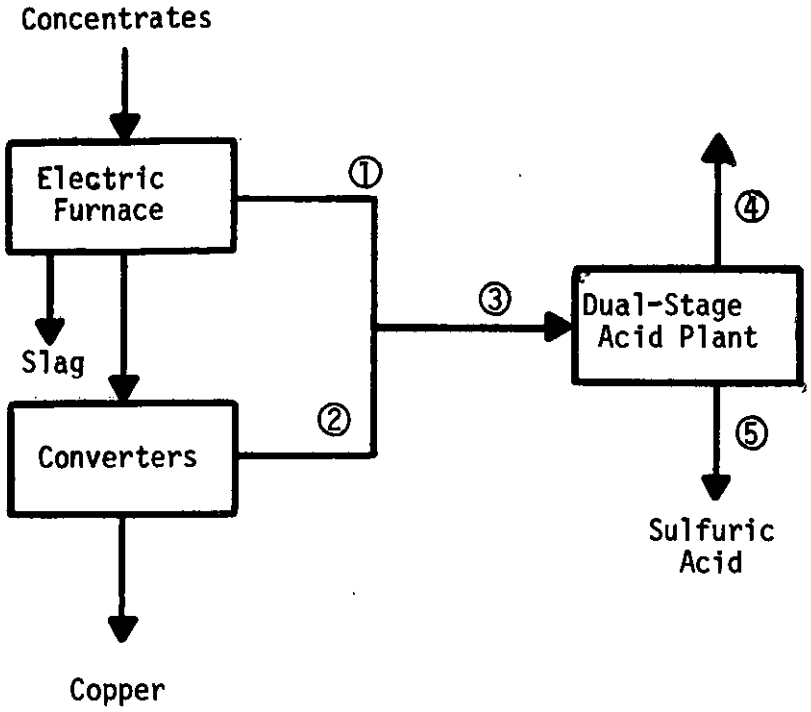

	①	②				
hr/day	24	5	11	2	5	1
SCFM	24,100	61,600	30,800	32,100	62,900	-
% SO_2	6	7	7	10.5	8.75	-
% O_2	5	10.5	10.5	10.5	10.5	-

	③				
hr/day	5	11	2	5	1
SCFM	85,700	54,900	56,200	87,000	24,100
% SO_2	6.75	6.5	8.5	8	6
% O_2	11.75	12.5	12.5	11.75	10

	④					⑤
hr/day	5	11	2	5	1	24
SCFM	77,100	49,600	49,100	76,600	21,900	
% SO_2	0.05	0.05	0.05	0.05	0.05	
% O_2						
H_2SO_4						944 TPD (100%)

Figure I-3. Model copper facility - Case I(c), material balance

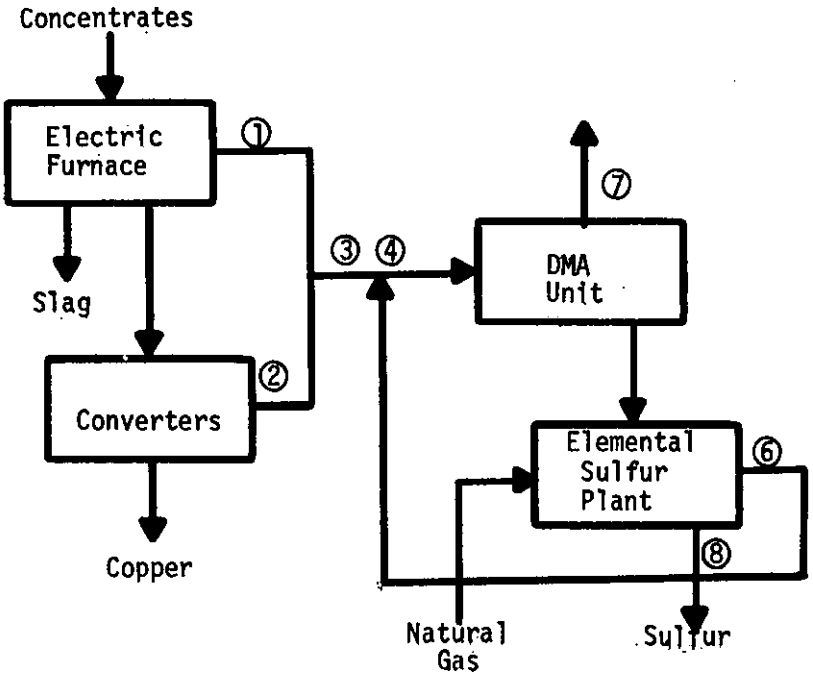

	①	②					③	
hr/day	24	5	11	2	5	1	5	11
SCFM	24,100	61,600	30,800	32,100	62,900	-	85,700	54,900
% SO_2	6	7	7	10.5	8.75	-	6.75	6.5
% O_2	15	10.5	10.5	10.5	10.5	-	10.25	10.25

	③			④				
hr/day	2	5	1	5	11	2	5	1
SCFM	56,200	87,000	24,100	97,200	62,000	65,800	101,000	27,000
% SO_2	8.5	8	6	6.5	6.5	8	7.75	6
% O_2	10.25	10.25	15					

	⑤					⑥				
hr/day	5	11	2	5	1	5	11	2	5	1
SCFM	6400	3900	5300	7700	1600	11,500	7100	9600	14,000	2900
% SO_2	100	100	100	100	100	5.5	5.5	5.5	5.5	5.5
% O_2										

	⑦					⑧
hr/day	5	11	2	5	1	24
SCFM	90,800	58,100	60,500	93,300	25,400	
% SO_2	0.05	0.05	0.05	0.05	0.05	
% O_2						
Sulfur						308 TPD

	Reduction Methane				
hr/day	5	11	2	5	1
SCFM	2800	1800	2400	3500	700

Figure I-4. Model copper facility - Case I(d), material balance

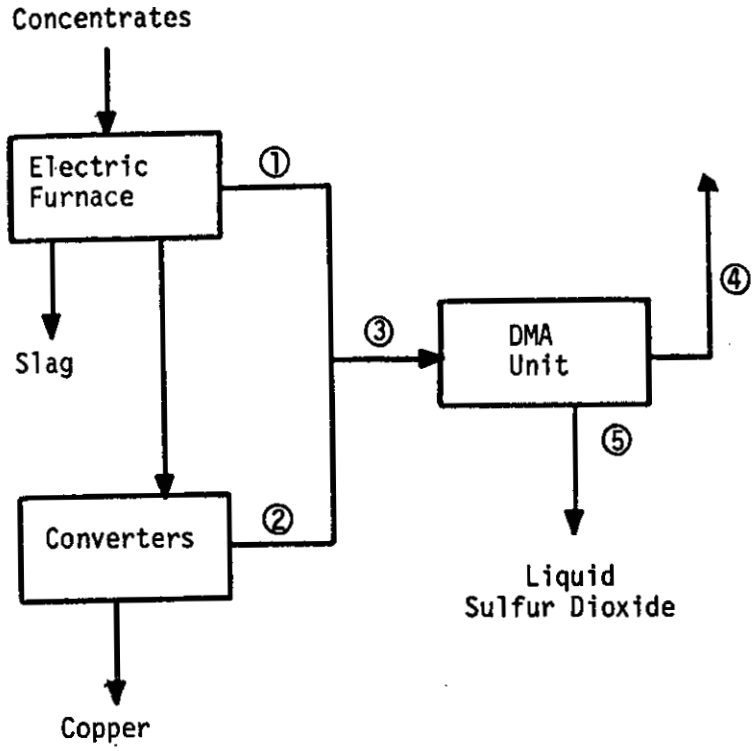

	①	②				
hr/day	24	5	11	2	5	1
SCFM	24,100	61,600	30,800	32,100	62,900	-
% SO_2	6	7	7	10.5	8.75	-
% O_2	15	10.5	10.5	10.5	10.5	-

	③				
hr/day	5	11	2	5	1
SCFM	85,700	54,900	56,200	87,000	24,100
% SO_2	6.75	6.5	8.5	8	6
% O_2					

	④				
hr/day	5	11	2	5	1
SCFM	80,000	51,400	51,400	80,100	22,700
% SO_2	0.05	0.05	0.05	0.05	0.05

	⑤				
SCFM	5700	3500	4800	6900	1400
% SO_2	100	100	100	100	100

Figure I-5. Model copper facility - Case II(a), material balance

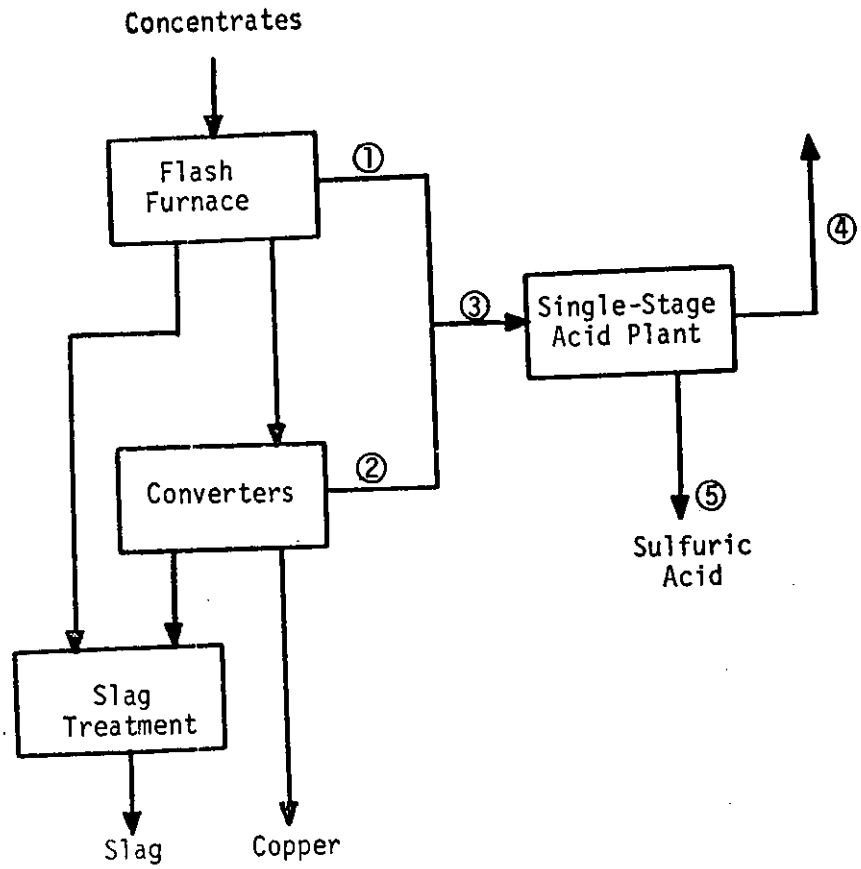

	①	②			
hr/day	24	9	4	10	1
SCFM	28,100	15,900	16,500	32,400	-
% SO_2	10.25	7	10.5	8.75	-
% O_2	5	10.5	10.5	10.5	-

	③			
hr/day	9	4	10	1
SCFM	54,100	58,200	73,000	39,200
% SO_2	7.5	8	7.75	7.25
% O_2	9.5	10.25	10.25	9.5

	④				⑤
hr/day	9	4	10	1	24
SCFM	48,100	51,300	64,600	35,000	
% SO_2	0.2	0.2	0.2	0.2	
H_2SO_4					929 TPD (100%)

Figure I-6. Model Copper Smelting - Material Balance for Case II(b)

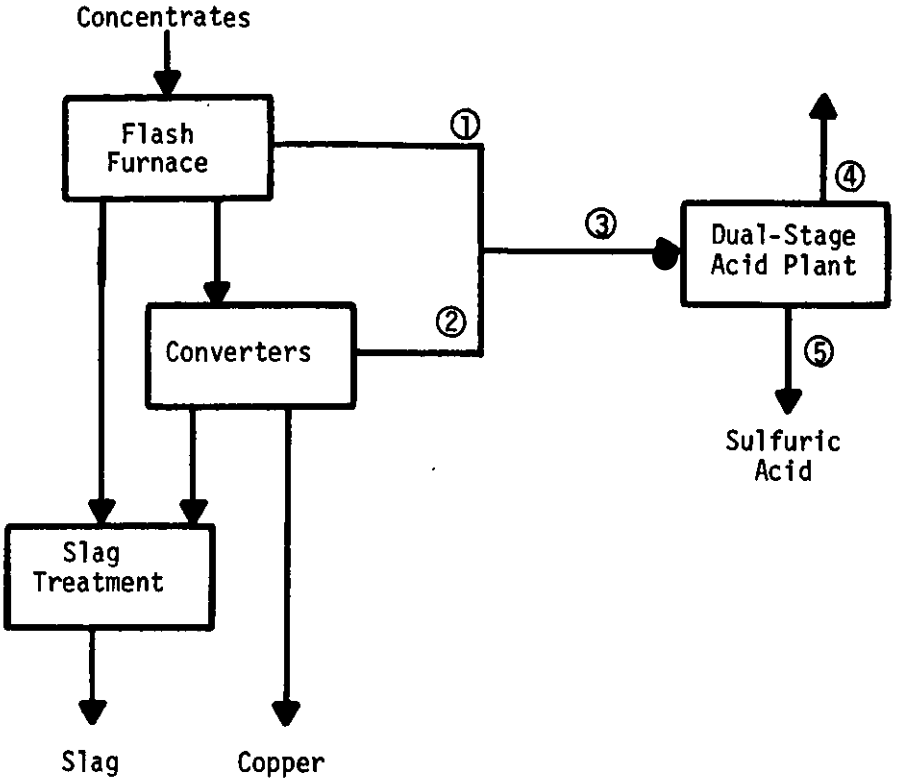

	①	②			
hr/day	24	9	4	10	1
SCFM	28,100	15,900	16,500	32,400	-
% SO_2	10.25	7	10.5	8.75	-
% O_2	5	10.5	10.5	10.5	-

	③			
hr/day	9	4	10	1
SCFM	54,100	58,200	73,000	39,200
% SO_2	7.25	8	7.75	7.25
% O_2	9.5	10.25	10.25	9.5

	④				⑤
hr/day	9	4	10	1	24
SCFM	48,000	51,200	64,500	35,000	
% SO_2	0.05	0.05	0.05	0.05	
H_2SO_4					945 TPD (100%)

Figure I-7. Model copper facility - Case II(c), material balance

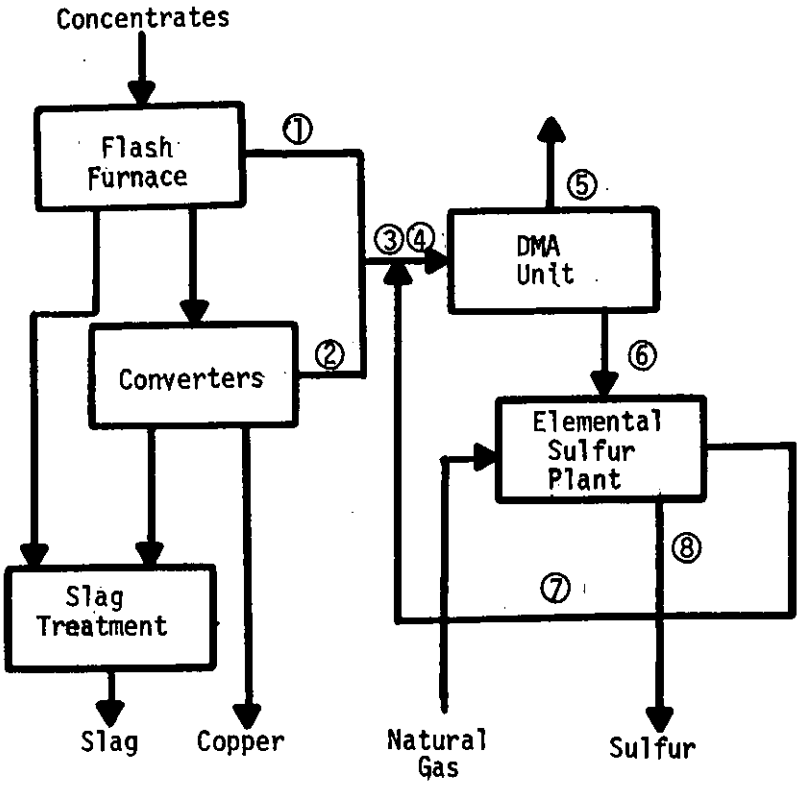

	①	②				③			
hr/day	24	9	4	10	1	9	4	10	1
SCFM	28,100	15,900	16,500	32,400	-	44,000	46,000	60,500	28,100
% SO_2	10.25	7	10.5	8.75	-	9	10.25	9.5	10.25
% O_2	5	10.5	10.5	10.5	-				

	④				⑤			
hr/day	9	4	10	1	9	4	10	1
SCFM	52,100	54,100	72,100	34,000	47,700	49,000	65,800	30,800
% SO_2	8.5	9.5	8.75	9.5	0.05	0.05	0.05	0.05
% O_2								

	⑥				⑦				⑧
hr/day	9	4	10	1	9	4	10	1	24
SCFM	4400	5100	6300	3200	8100	9500	11,600	5900	
% SO_2	100	100	100	100	5.5	5.5	5.5	5.5	
% O_2									
Sulfur									309 TPD

	Reduction Methane			
hr/day	9	4	10	1
SCFM	2100	2500	3000	1500

Figure I-8. Model copper facility - Case I(d), material balance

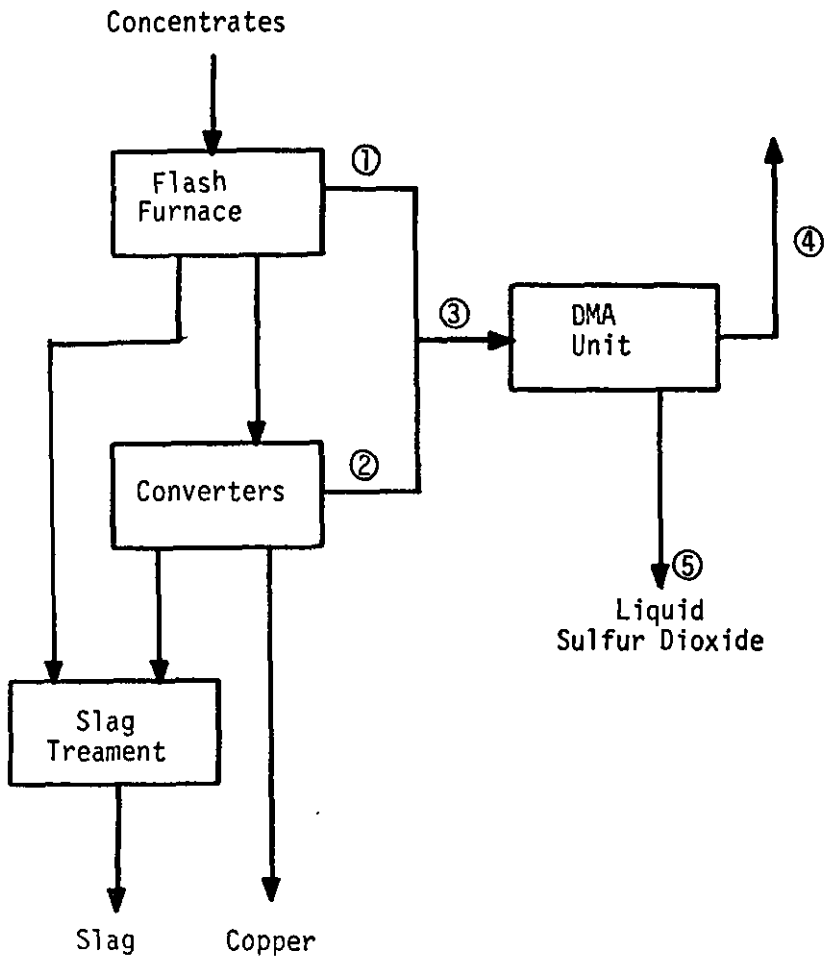

	①	②				③			
hr/day	24	9	4	10	1	9	4	10	1
SCFM	28,100	15,900	16,500	32,400	-	44,000	44,600	60,500	28,100
% SO_2	10.25	7	10.5	8.75	-	9	10.25	9.5	10.25
% O_2	5	10.5	10.5	10.5	-				

	④				⑤			
hr/day	9	4	10	1	9	4	10	1
SCFM	40,100	40,000	54,800	25,200	3900	4600	5700	2900
% SO_2	0.05	0.05	0.05	0.05	100	100	100	100

Figure I-9. Model copper facility - Case III(a), material balance

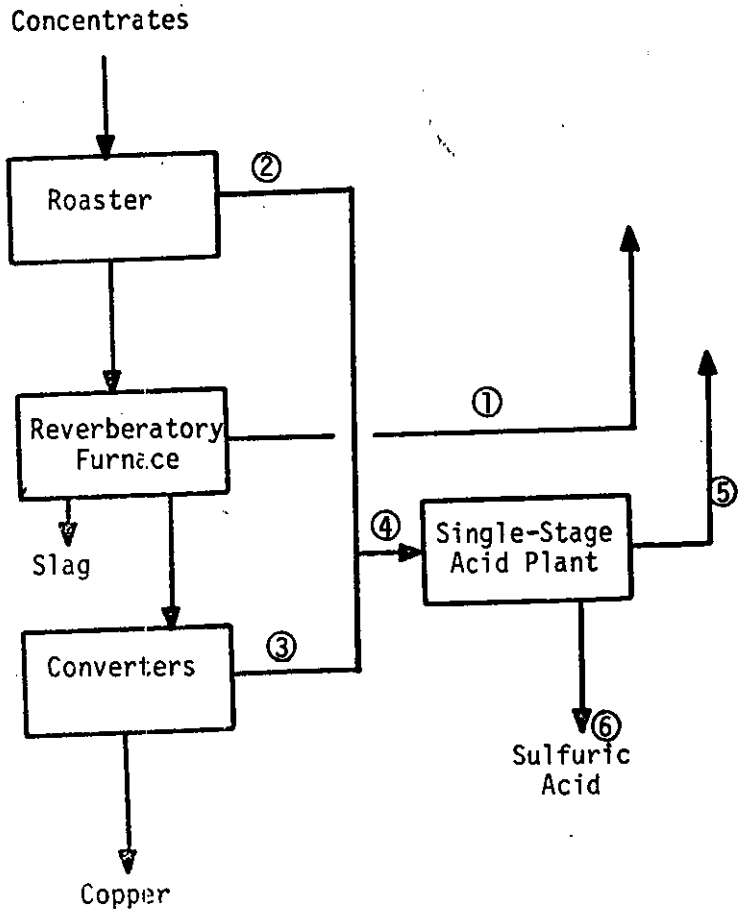

	①	②	③				
hr/day	24	24	2	9	4	8	1
SCFM	45,600	17,100	36,800	18,400	19,300	37,700	-
% SO_2	2.25	10	7	7	10.5	8.75	-
% O_2	5	5	10.5	10.5	10.5	10.5	-

	④				
hr/day	2	9	4	8	1
SCFM	58,000	40,800	45,800	62,900	23,600
% SO_2	7.5	7.25	8.25	8	7.25
% O_2	9.75	9.5	10.5	10.25	9.5

	⑤					⑥
hr/day	2	9	4	8	1	24
SCFM	51,600	36,400	40,200	55,500	21,100	
% SO_2	0.2	0.2	0.2	0.2	0.2	
H_2SO_4						748 TPD (100%)

Figure I-10. Model copper facility - Case III(b), material balance

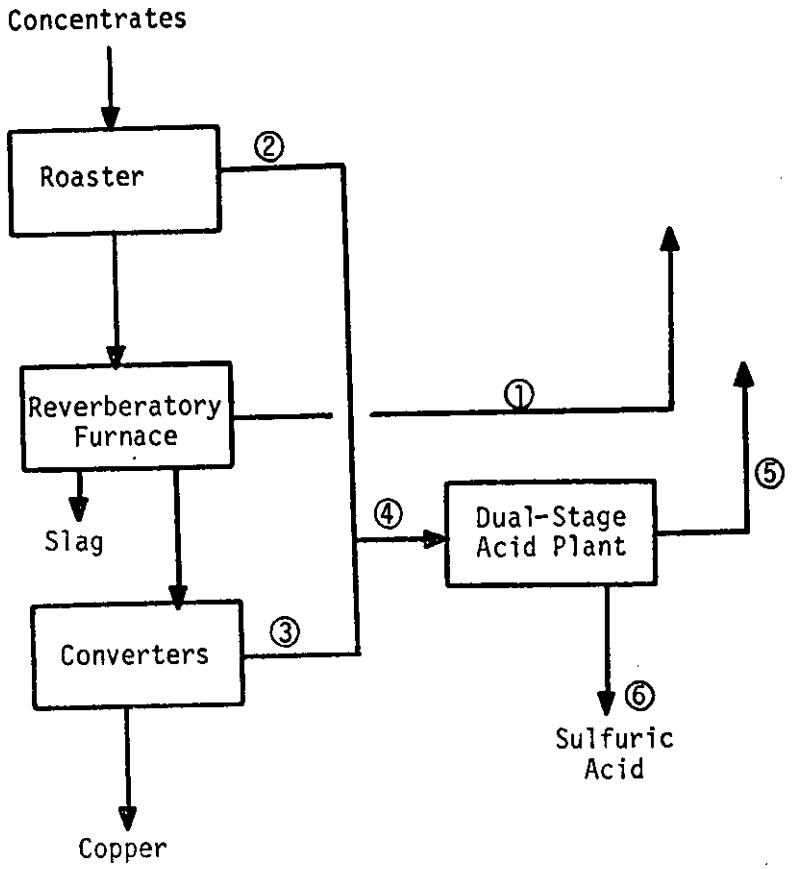

	①	②	③				
hr/day	24	24	2	9	4	8	1
SCFM	45,600	17,100	36,800	18,400	19,300	37,700	-
% SO_2	2.25	10	7	7	10.5	8.75	-
% O_2	5	5	10.5	10.5	10.5	10.5	-

	④				
hr/day	2	9	4	8	1
SCFM	58,000	40,800	45,800	62,900	23,600
% SO_2	7.5	7.25	8.25	8	7.25
% O_2	9.75	9.5	10.5	10.25	9.5

	⑤					⑥
hr/day	2	9	4	8	1	
SCFM	51,500	36,400	40,200	55,400	21,000	
% SO_2	0.05	0.05	0.05	0.05	0.05	
H_2SO_4						760 TPD (100%)

Figure I-11. Model Copper Smelting - Material Balance for Case III(c)

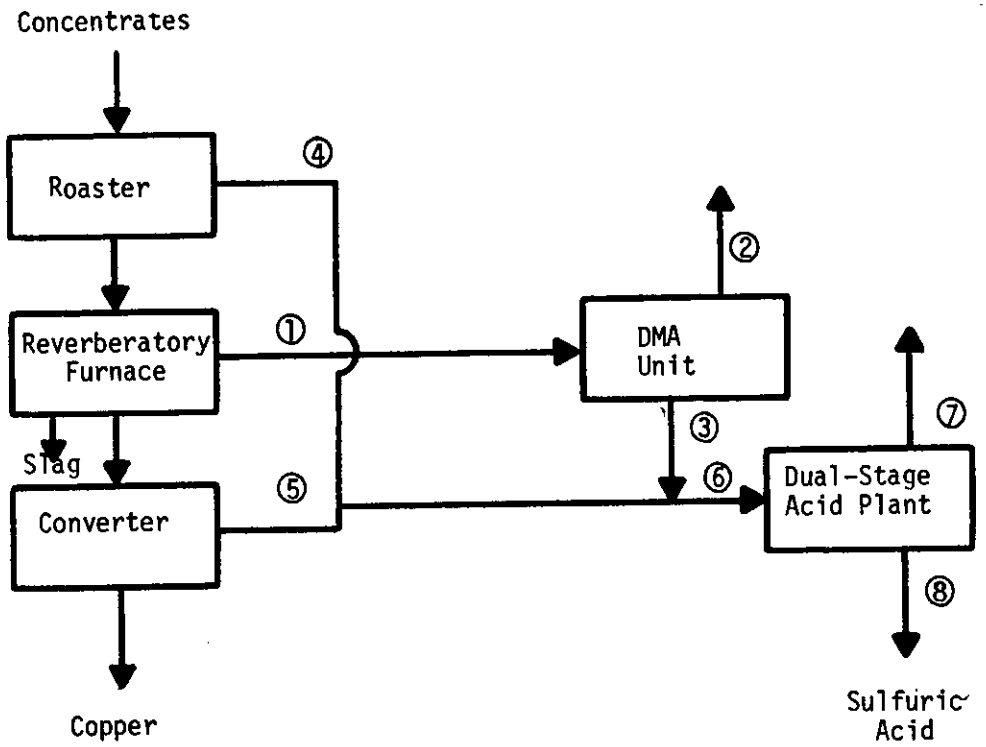

	①	②	③	④	⑤				
hr/day	24	24	24	24	2	9	4	8	1
SCFM	45,600	44,700	900	17,100	36,800	18,400	19,300	37,700	-
% SO_2	2.25	0.05	100	10	7	7	10.5	8.75	-
% O_2	5	-	-	5	10.5	10.5	10.5	10.5	-

	⑥				
hr/day	2	9	4	8	1
SCFM	64,400	47,300	52,300	69,400	30,100
% SO_2	8	8.25	8.75	8.5	8.75
% O_2	10.5	10.75	11.5	11	11.25

	⑦					⑧
hr/day	2	9	4	8	1	24
SCFM	56,700	41,500	45,500	60,600	26,200	
% SO_2	0.05	0.05	0.05	0.05	0.05	
% O_2						
H_2SO_4						946 TPD (100%)

Figure I-12. Model copper facility - Case IV(a), material balance

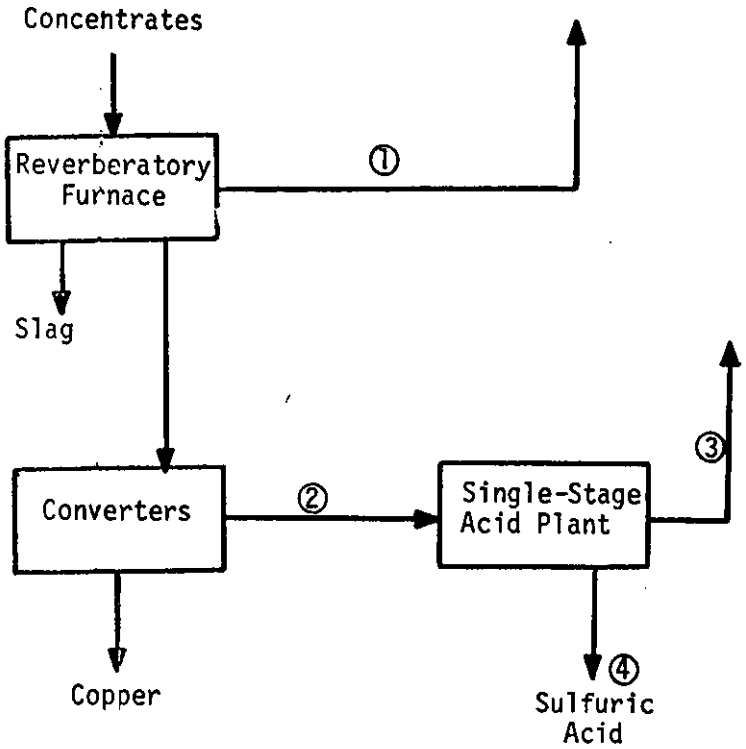

	①	②				
hr/day	24	5	11	2	5	1
SCFM	82,600	61,600	30,800	36,900	65,500	-
% SO_2	1.75	7	7	9	8.5	-
% O_2	5	10.5	10.5	11.75	11	-

	③					④
hr/day	5	11	2	5	1	24
SCFM	55,200	27,600	32,000	57,300	-	
% SO_2	0.2	0.2	0.2	0.2	-	
% O_2						
H_2SO_4						651 TPD (100%)

Figure I-13. Model copper facility - Case IV(b), material balance

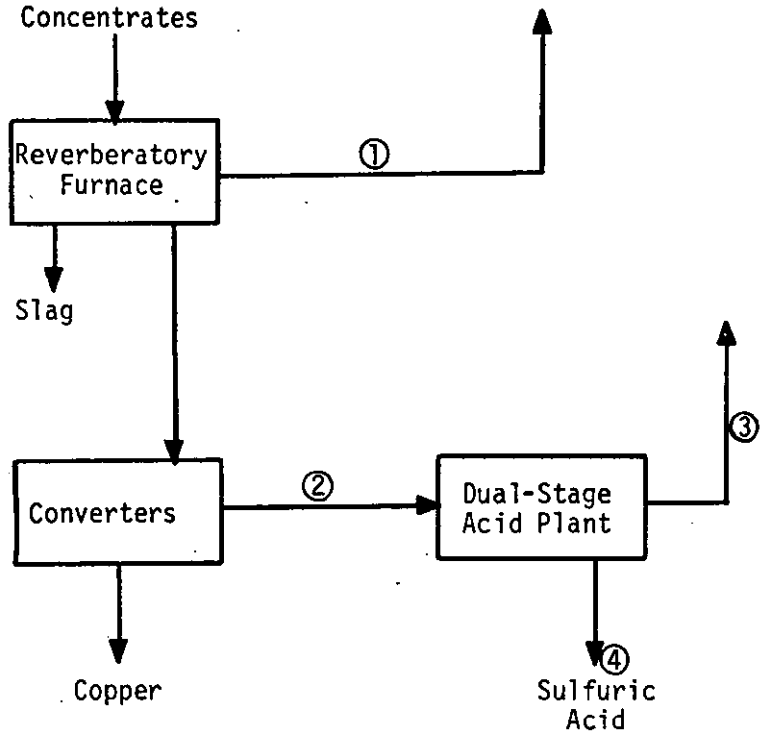

	①	②				
hr/day	24	5	11	2	5	1
SCFM	82,600	61,600	30,800	36,900	65,500	-
% SO_2	1.75	7	7	9	8.5	-
% O_2	5	10.5	10.5	11.75	11	-

	③					④
hr/day	5	11	2	5	1	24
SCFM	55,200	27,600	31,900	57,200	-	
% SO_2	0.05	0.05	0.05	0.05	-	
H_2SO_4						660 TPD (100%)

Figure I-14. Model Copper Smelting - Material Balance for Case IV(c)

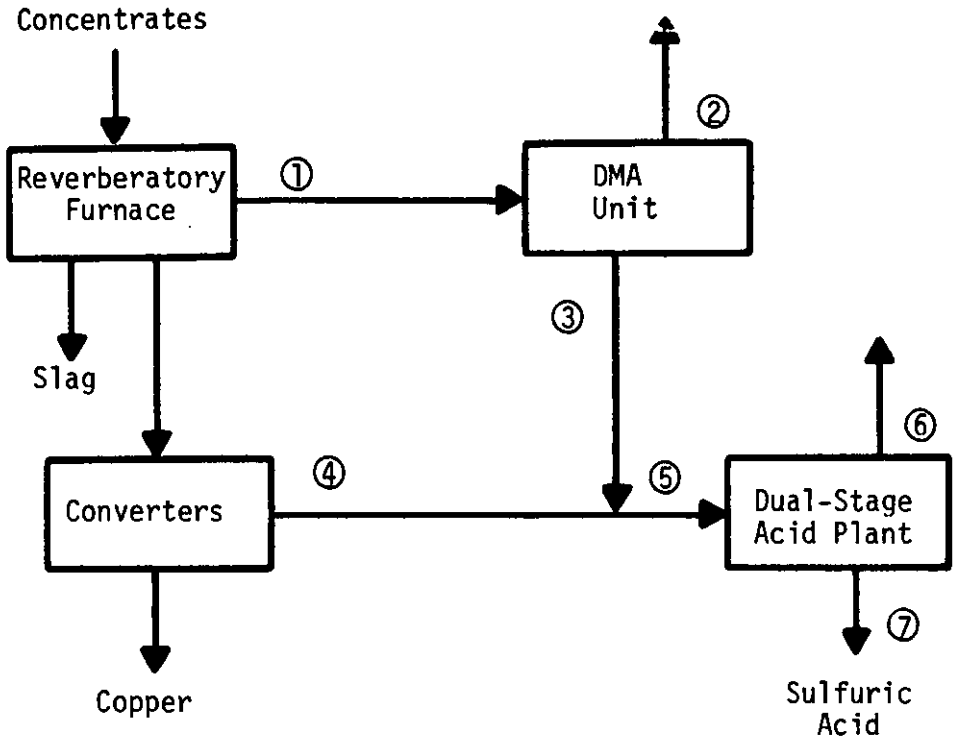

	①	②	③	④				
hr/day	24	24	24	5	11	2	5	1
SCFM	82,600	81,200	1400	61,600	30,800	32,100	62,900	-
% SO_2	1.75	0.05	100	7	7	10.5	8.75	-
% O_2	5			10.5	10.5	10.5	10.5	-

	⑤				
hr/day	5	11	2	5	1
SCFM	67,600	38,800	53,000	75,600	15,700
% SO_2	8.5	9	9	9	9
% O_2	11	11.75	11	11.75	19

	⑥					⑦
hr/day	5	11	2	5	1	24
SCFM	59,000	33,600	45,900	65,400	13,600	
% SO_2	0.05	0.05	0.05	0.05	0.05	
H_2SO_4						937 TPD (100%)

Figure I-15. Model zinc facility - Case I(a), material balance

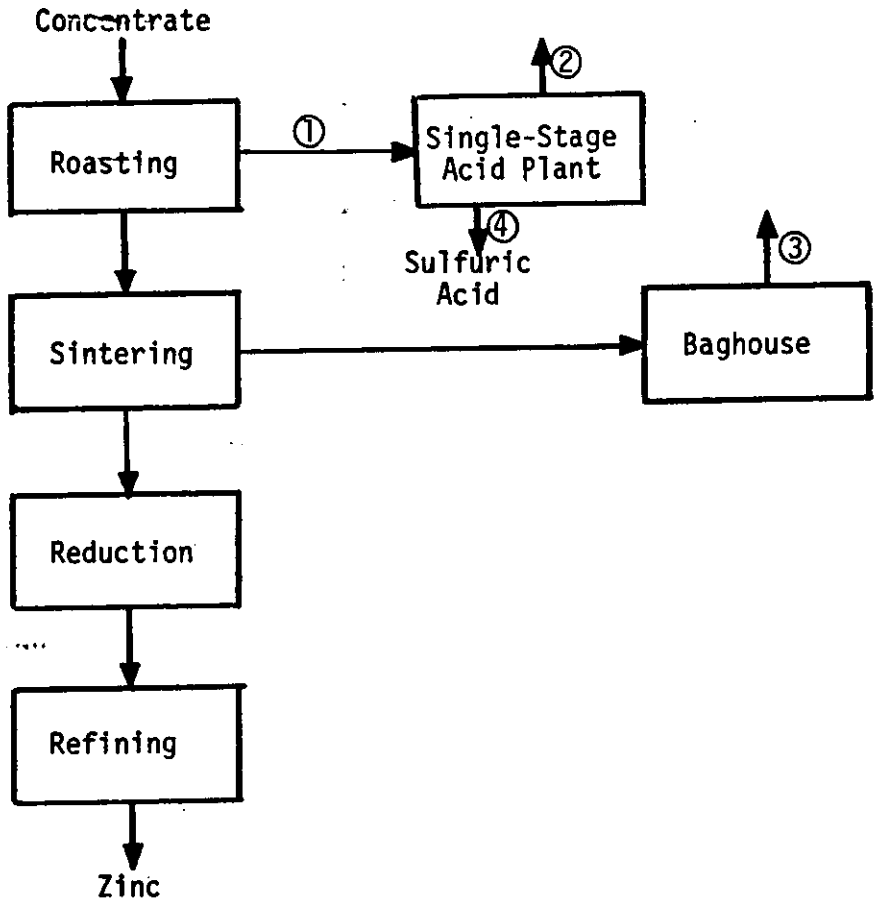

	①	②	③	④
hr/day	24	24	24	
SCFM	36,300	32,600	36,000	
% SO_2	7	0.2	0.2	
% O_2	9			
g/SCF		0	0.02	
H_2SO_4				487 TPD

Figure I-16. Model Zinc Smelter - Material Balance for Case I(b)

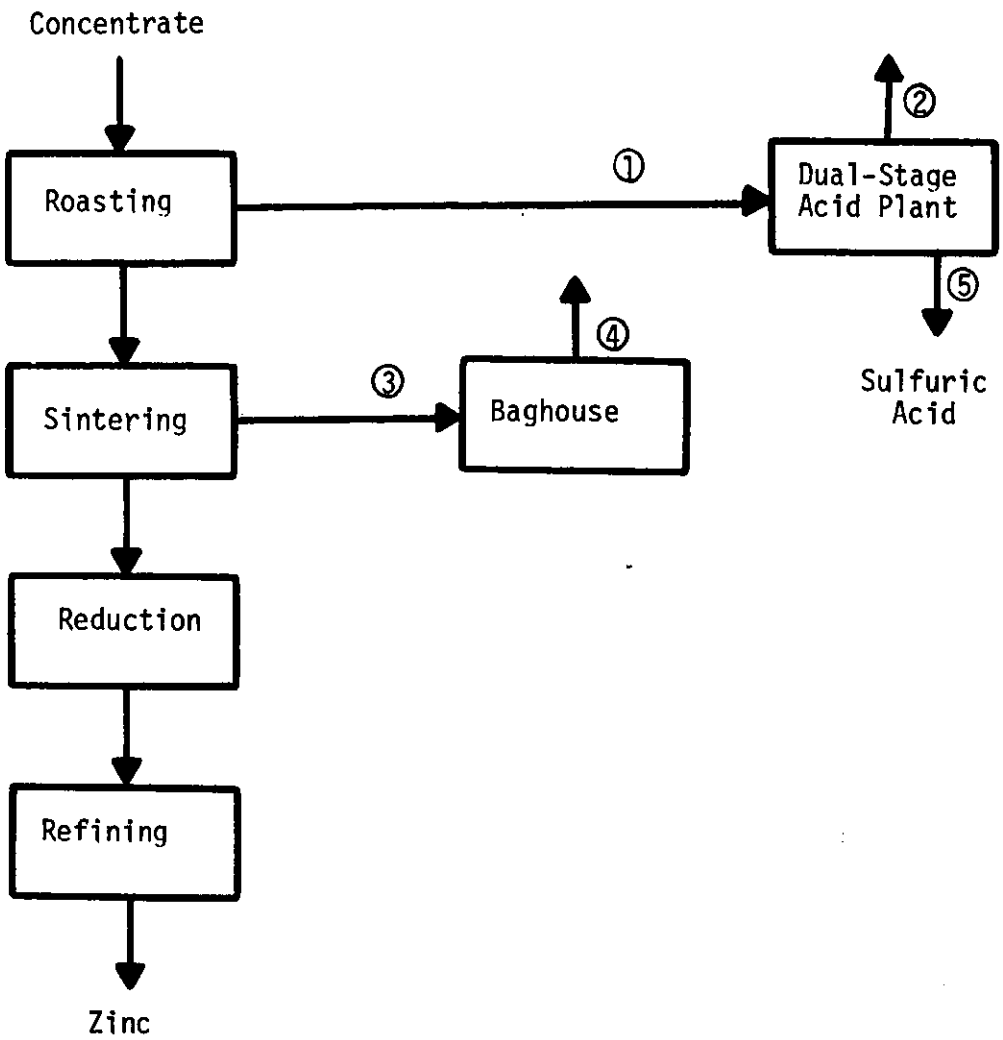

	①	②	③	④
hr/day	24	24	24	24
SCFM	36,300	32,500	36,000	
% SO_2	7	0.05	0.2	
% O_2	9			
g/SCF		0	0.02	
H_2SO_4				497 TPD

Figure I-17. Model zinc facility - Case I(c), material balance

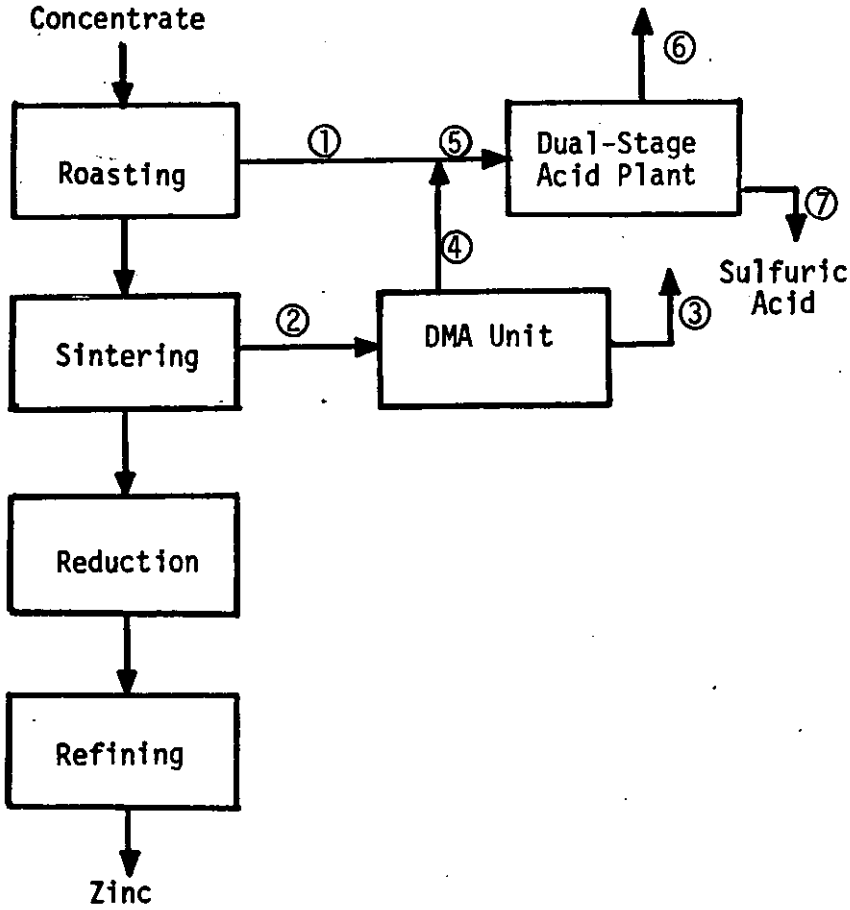

	①	②	③	④	⑤	⑥	⑦
hr/day	24	24	24	24	24	24	24
SCFM	20,800	71,800	71,700	100	37,000	33,100	
% SO_2	12	0.1	0.05	100	7	0.05	
% O_2					9.25		
H_2SO_4							497 TPD (100%)

Figure I-18. Model zinc facility - Case I(d) material balance

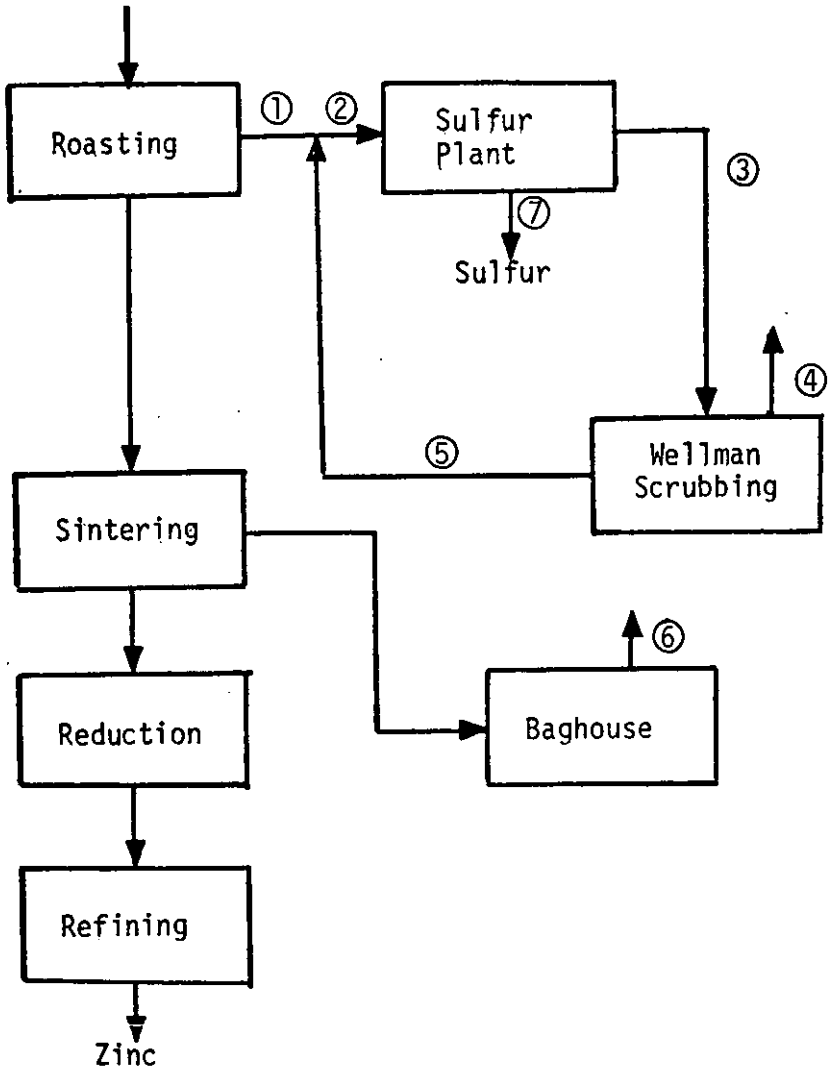

	①	②	③	④	⑤	⑥	⑦
hr/day	24	24	24	24	24	24	24
SCFM	21,500	21,800	29,000	28,700	300	35,900	
% SO_2	12	13.25	1	0.05	100	0.2	
% O_2							
g/SCF			0	0		0.02	
H_2SO_4							165 TPD

	Reduction Methane
hr/day	24
SCFM	1400

Figure I-19. Model zinc facility - Case II(a), material balance

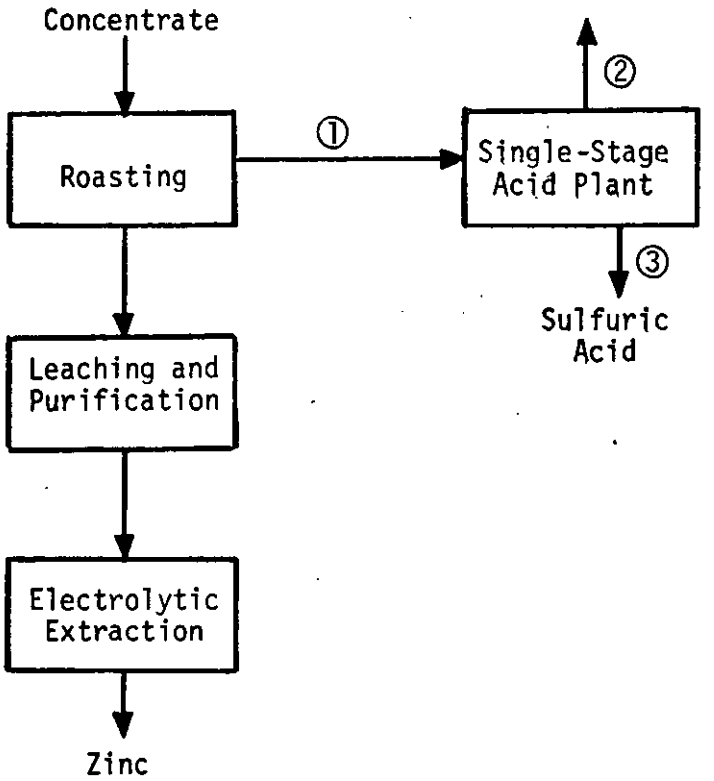

	①	②	③
hr/day	24	24	
SCFM	37,500	33,700	
% SO_2	7	0.2	
% O_2	9		
H_2SO_4			495 TPD

Figure I-20. Model Zinc Smelter - Material Balance for Case II(b)

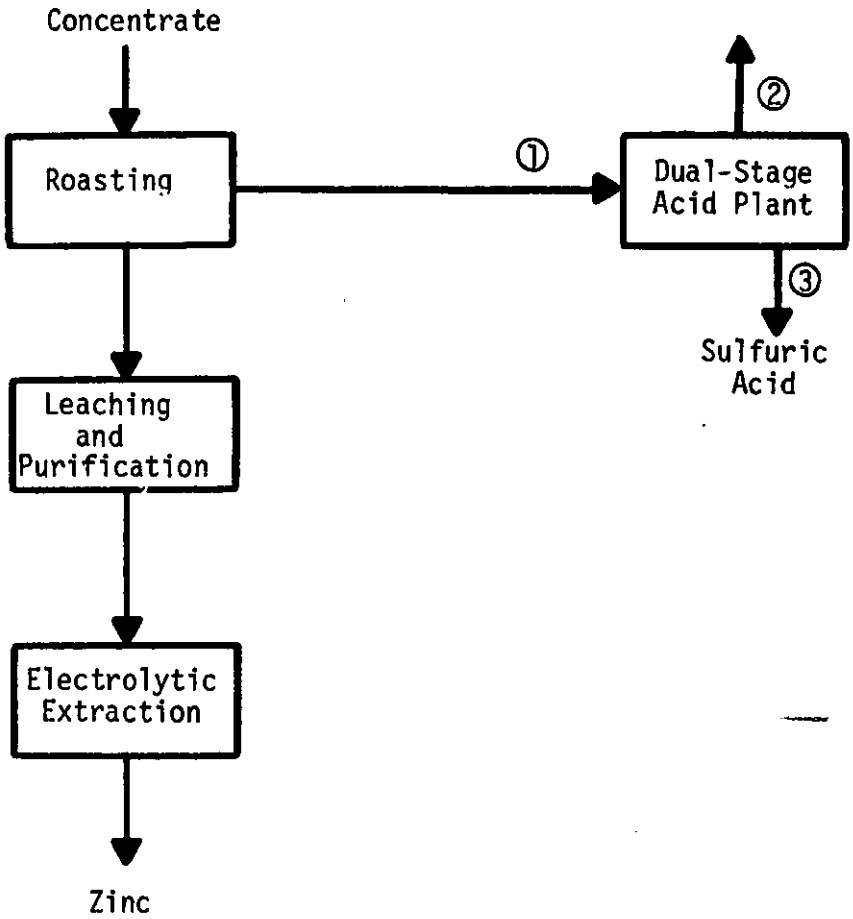

	①	②	③
hr/day	24	24	24
SCFM	37,500	33,600	
% SO_2	7	0.05	
% O_2	9		
g/SCF		0	
H_2SO_4			505 TPD

Figure I-21. Model zinc facility - Case II(c), material balance

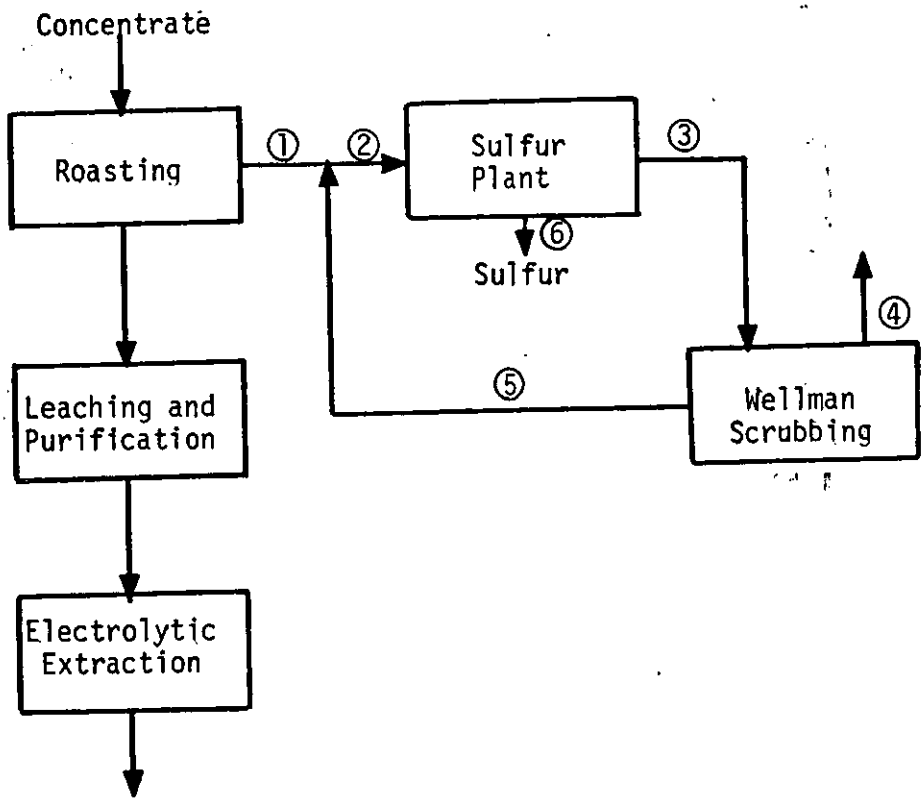

	①	②	③	④	⑤	⑥
hr/day	24	24	24	24	24	24
SCFM	21,500	21,800	29,000	28,700	300	
% SO_2	12		1	0.05	100	
% O_2	0	0	0		0	
g/SCF			0	0	0	
Sulfur						166 TPD

	Reduction Methane
hr/day	24
SCFM	1400

Figure I-22. Model zinc facility - Case III(a), material balance

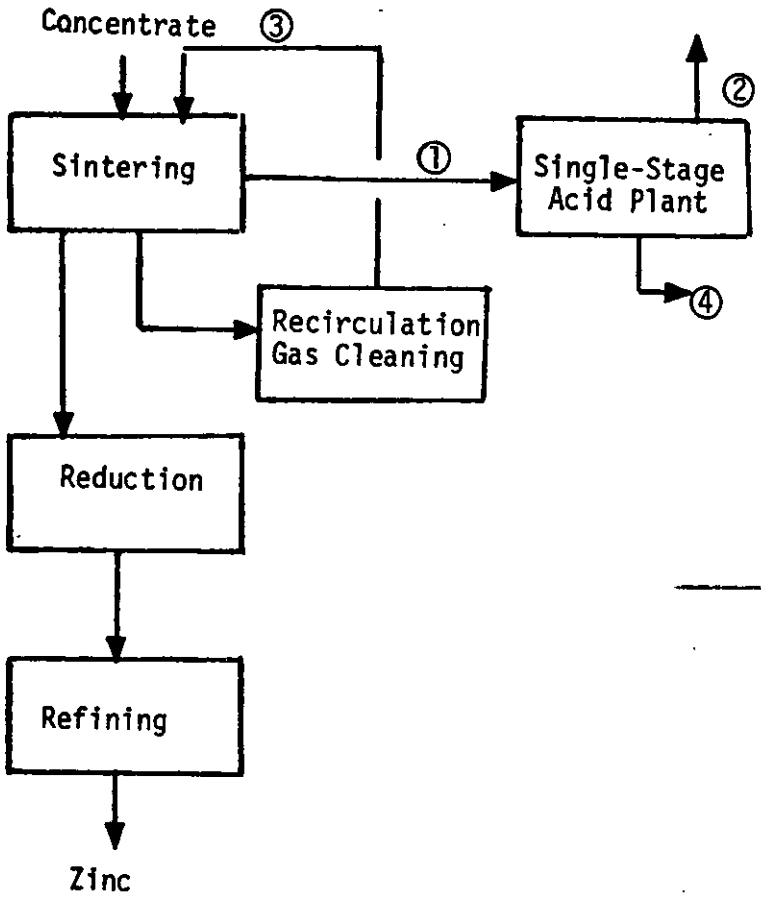

	①	②	③	④
hr/day	24	24	24	24
SCFM	72,200	66,900	58,000	
% SO_2	5.0	0.2	0.5	
% O_2	6.5			
g/SCF		0		
H_2SO_4				673 TPD

Figure I-23. Model Zinc Smelter - Material Balance for Case III(b)

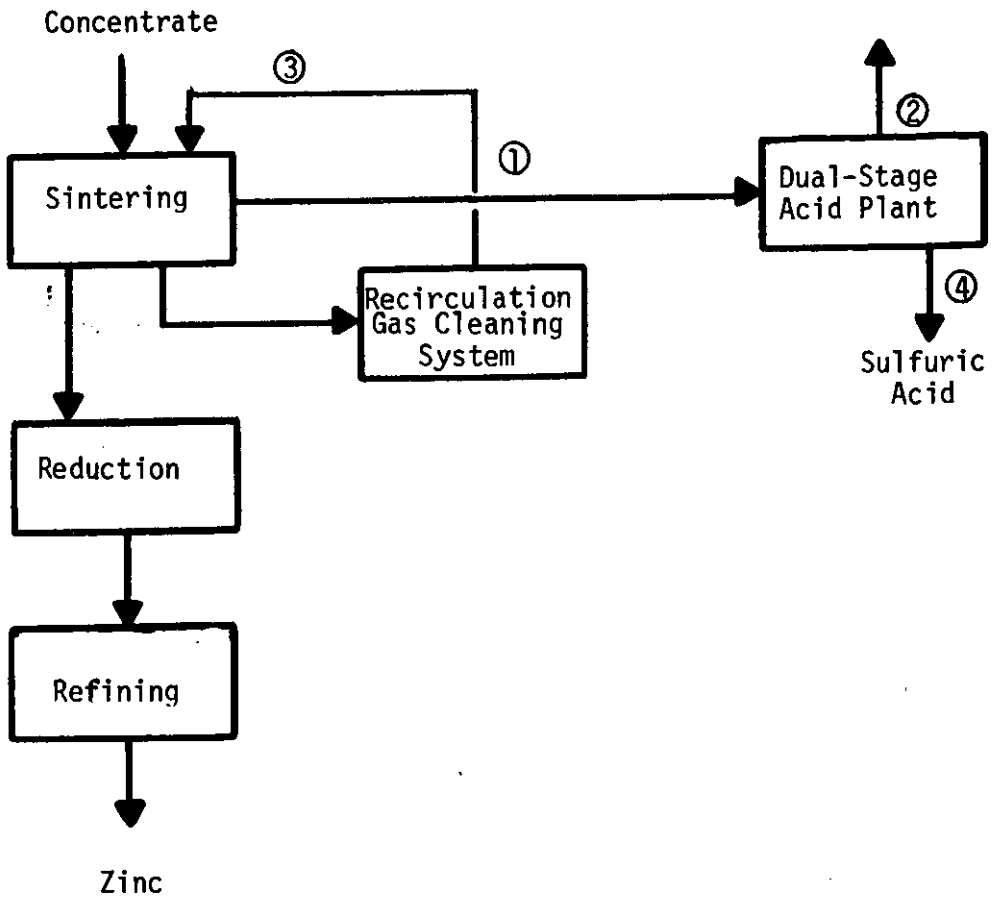

	①	②	③	④
hr/day	24	24	24	24
SCFM	72,200	66,800	58,000	
% SO_2	5	0.05	0.5	
% O_2	6.5			
g/SCF		0		
H_2SO_4				703 TPD

Figure I-24. Model zinc facility - Case III(c), material balance

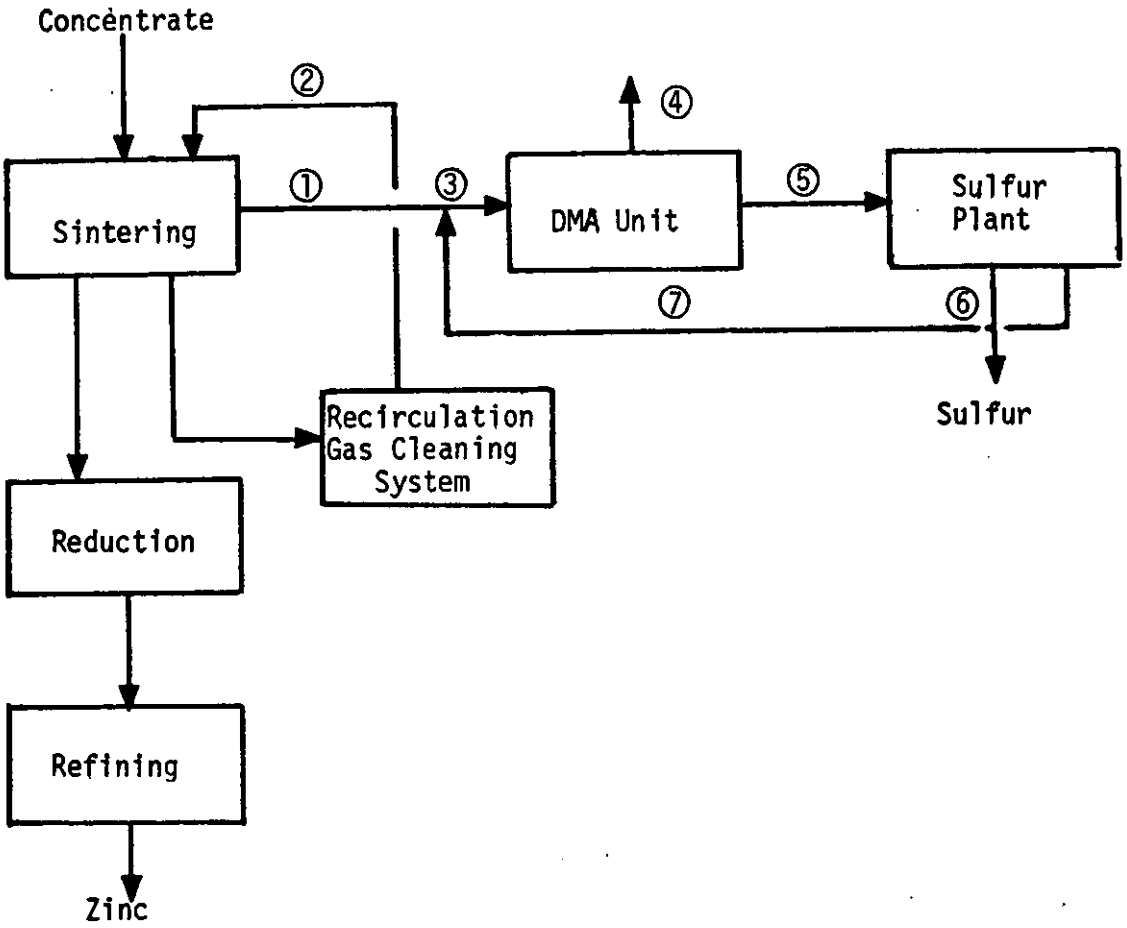

	①	②	③	④	⑤	⑥	⑦
hr/day	24	24	24	24	24	24	24
SCFM	72,200	58,000	79,400	75,500	3900		7200
% SO_2	5.0	0.5	5.0	0.05	100		5.5
% O_2	6.5						
g/SCF				0			0
Sulfur						229 TPD	

	Reduction Methane
hr/day	24
SCFM	1900

Figure I-25. Model lead facility - Case I(a), material balance

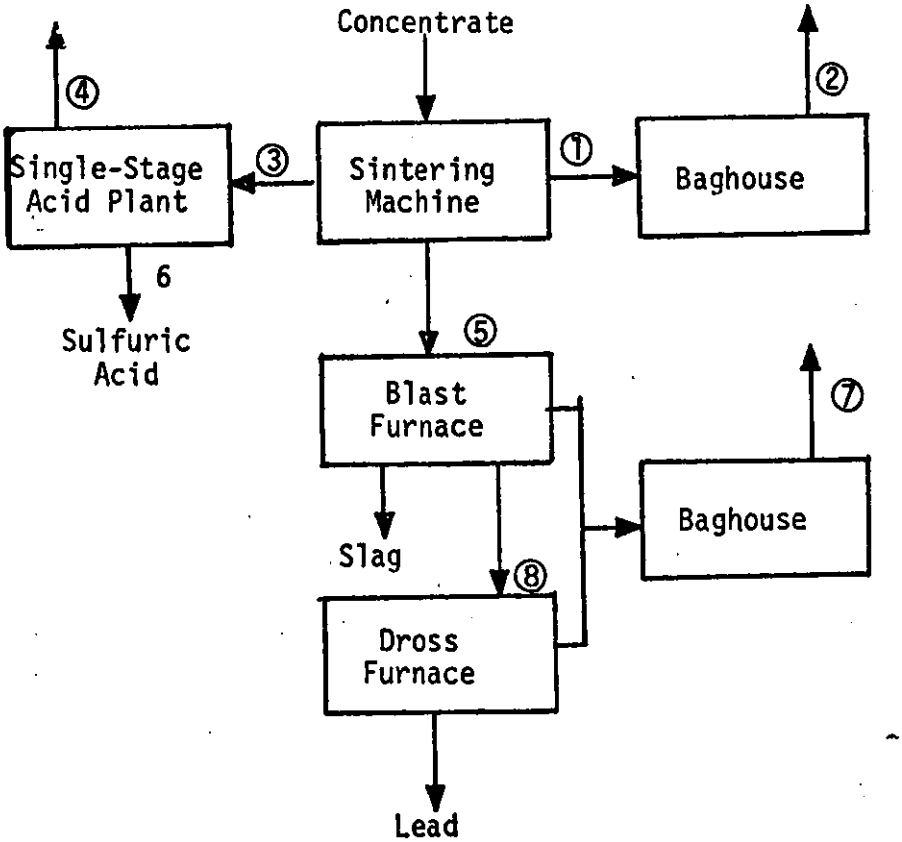

	①	②	③	④	⑤
hr/day	24	24	24	24	24
SCFM	80,400	80,400	18,600	16,800	22,500
% SO_2	0.5	0.5	6.5	0.2	0.5
% O_2			12.0	8	12
g/SCF		0.007	0	0	

	⑥	⑦	⑧
hr/day	24	24	24
SCFM		42,500	20,000
% SO_2		0.3	
% O_2		19	
g/SCF		0.007	
H_2SO_4	230 TPD (100%)		

Figure I-26. Model Lead Smelting - Material Balance for Case I(b)

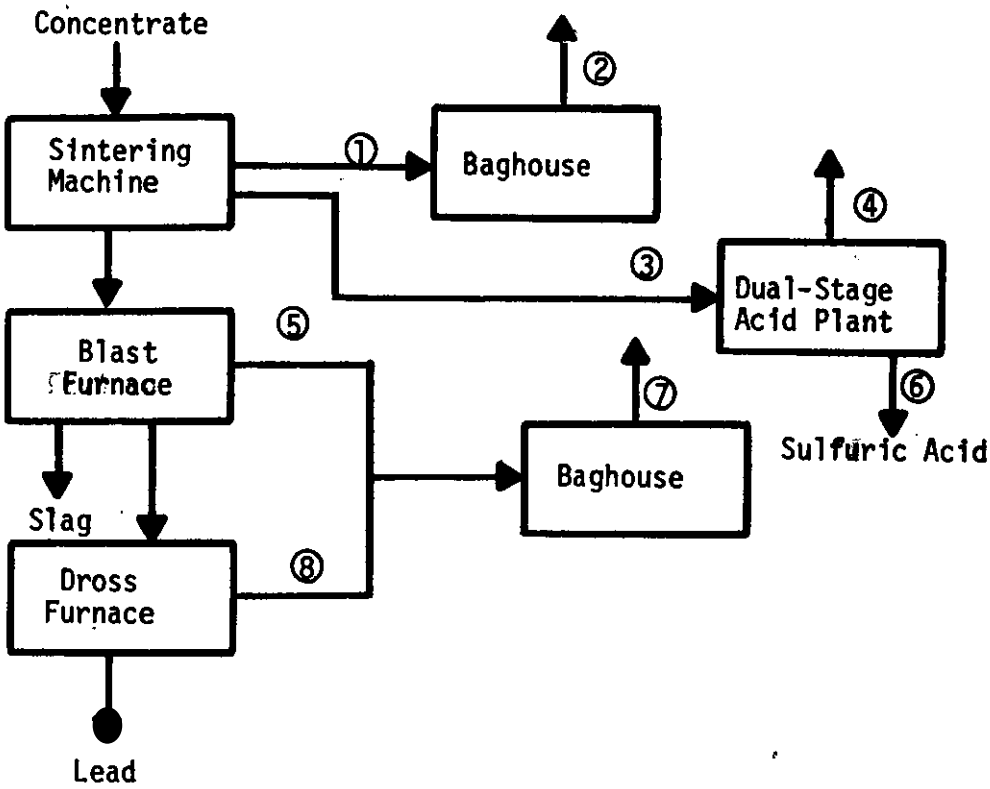

	①	②	③	④	⑤	⑥	⑦
hr/day	24	24	24	24	24	24	24
SCFM	80,400	80,400	18,600	16,800	22,500		42,500
% SO_2	0.5	0.5	6.5	0.05	0.5		0.3
% O_2			12.0	8	12		19
g/SCF		0.007	0				0.007
H_2SO_4						236 TPD (100%)	

	⑧
hr/day	24
SCFM	20,000
% SO_2	
% O_2	
g/SCF	

Figure I-27. Model lead facility - Case I(c), material balance

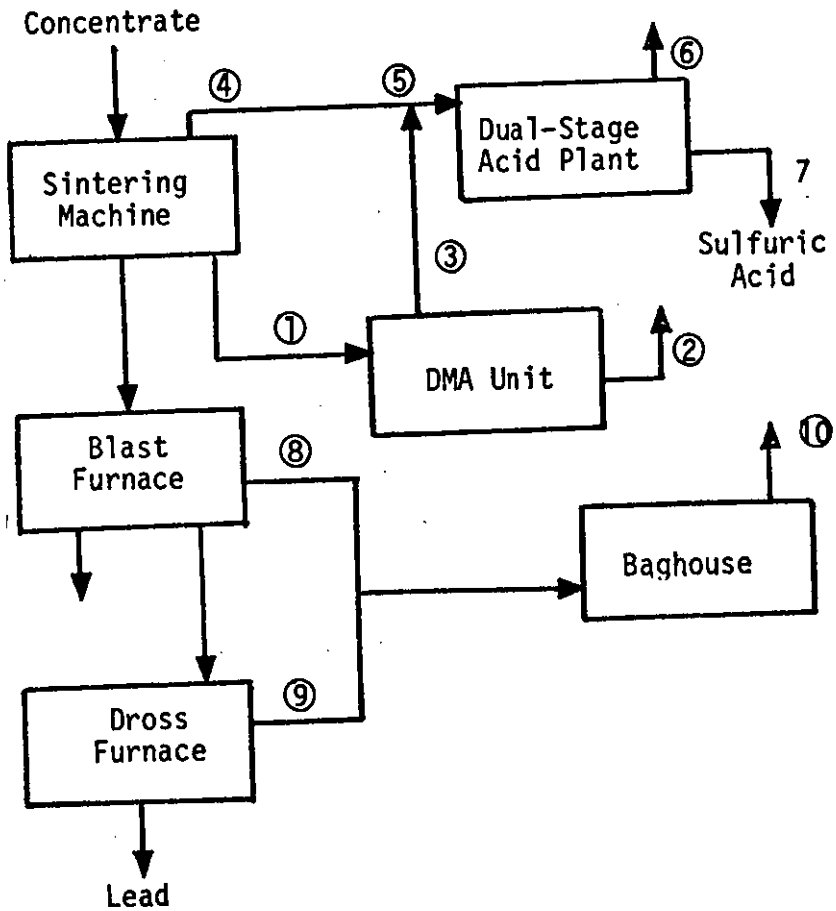

	①	②	③	④	⑤	⑥
SCFM	80,400	80,000	400	18,600	19,000	16,600
% SO_2	0.5	0.05	100	6.5	8.5	0.05
% O_2				12	11.75	

	⑦	⑧	⑨	⑩
SCFM		22,500	20,000	42,500
% SO_2		0.5		
gr/SCF				0.02
H_2SO_4	316 TPD (100%)			

Figure I-28. Model lead facility
Case I(d), material balance

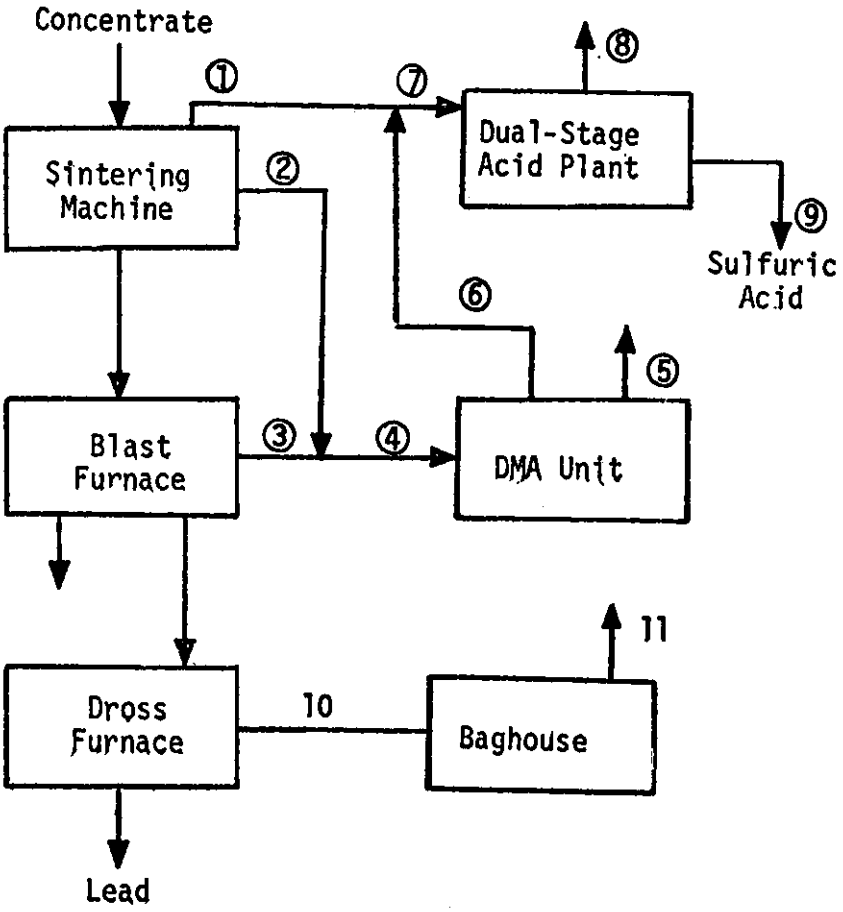

	①	②	③	④	⑤	⑥	⑦
SCFM	18,600	80,400	22,500	102,900	102,400	500	19,100
% SO_2	6.5	0.5	0.5	0.5	0.05	100	6.75-11.75
% O_2	12						

	⑧	⑨	⑩	⑪
SCFM	17,200		20,000	20,000
% SO_2	0.05			
gr/SCF				0.02
H_2SO_4		252 TPD (100%)		

Figure I-29. Model lead facility - Case II(a), material balance

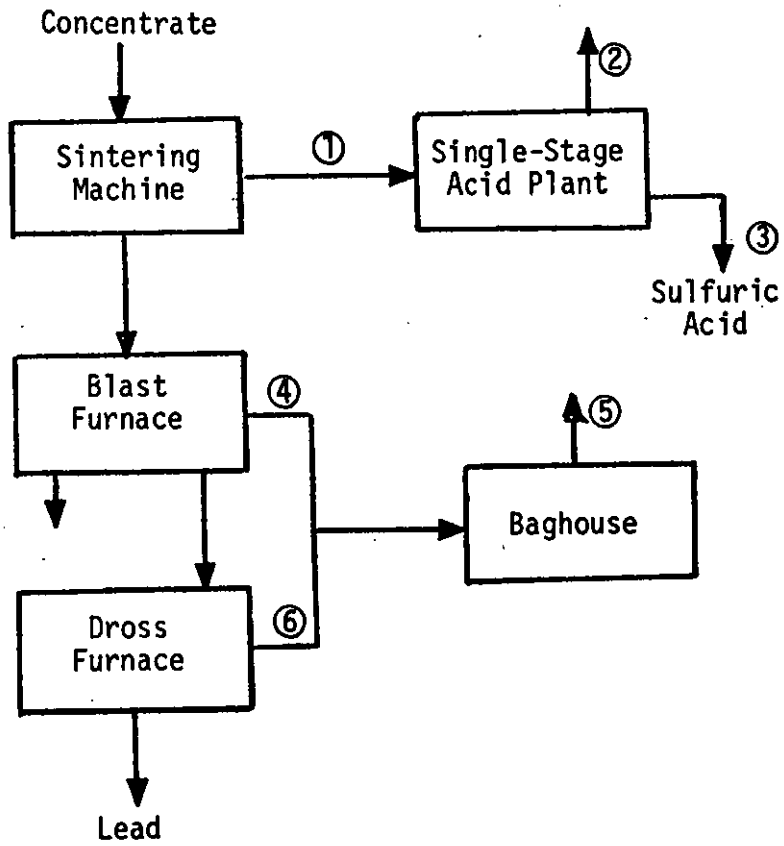

	①	②	③	④	⑤	⑥
hr/day	24	24	24	24	24	24
SCFM	33,000	30,600		22,500	42,500	20,000
% SO_2	5.0	0.2		0.5	0.3	
% O_2	6.5			19		
g/SCF		0			0.007	
H_2SO_4			306 TPD			

Figure I-30. Model Lead Smelter - Material Balance for Case II(b)

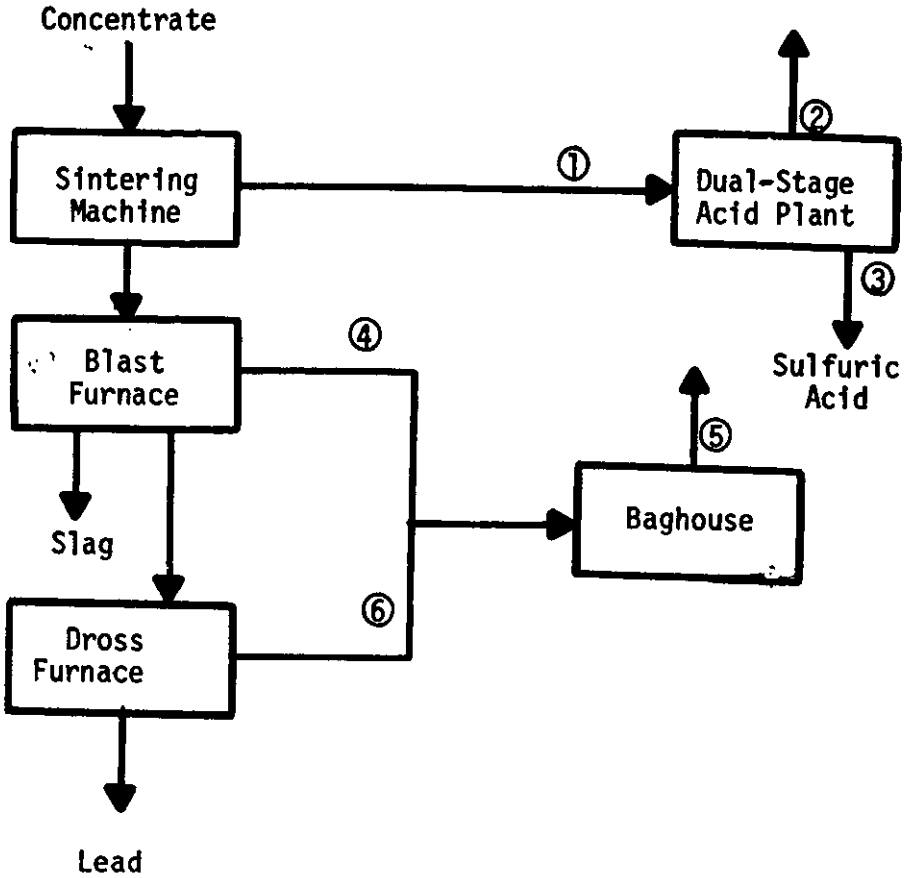

	①	②	③	④	⑤	⑥
hr/day	24	24		24	24	24
SCFM	33,000	30,600		22,500	42,500	20,000
% SO_2	5	0.05		0.5	0.3	
% O_2	6.5			19		
g/SCF		0			0.007	
H_2SO_4			315 TPD			

Figure I-31. Model lead facility - Case II(c), material balance

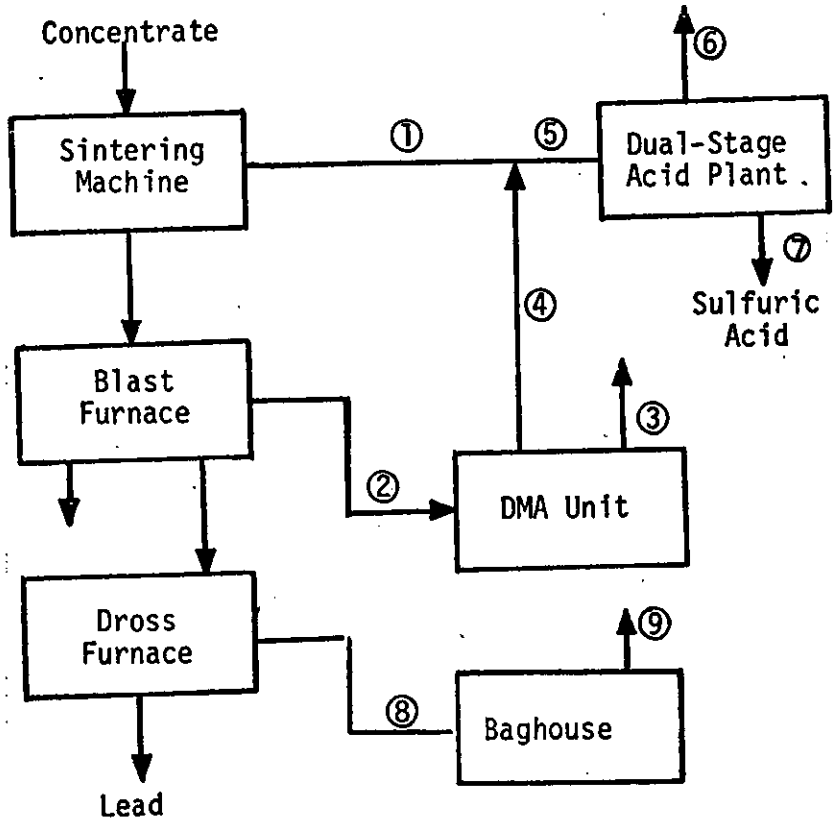

	①	②	③	④	⑤	⑥
SCFM	33,000	22,500	22,400	100	33,700	31,100
% SO_2	5.0	0.5	0.05	100	5.25	0.05
% O_2	6.5	19			6.75	

	⑦	⑧	⑨
SCFM		20,000	20,000
% SO_2			
gr/SCF			0.02
H_2SO_4	347 TPD (100%)		

Figure I-32. Model lead facility - Case II(d), material balance

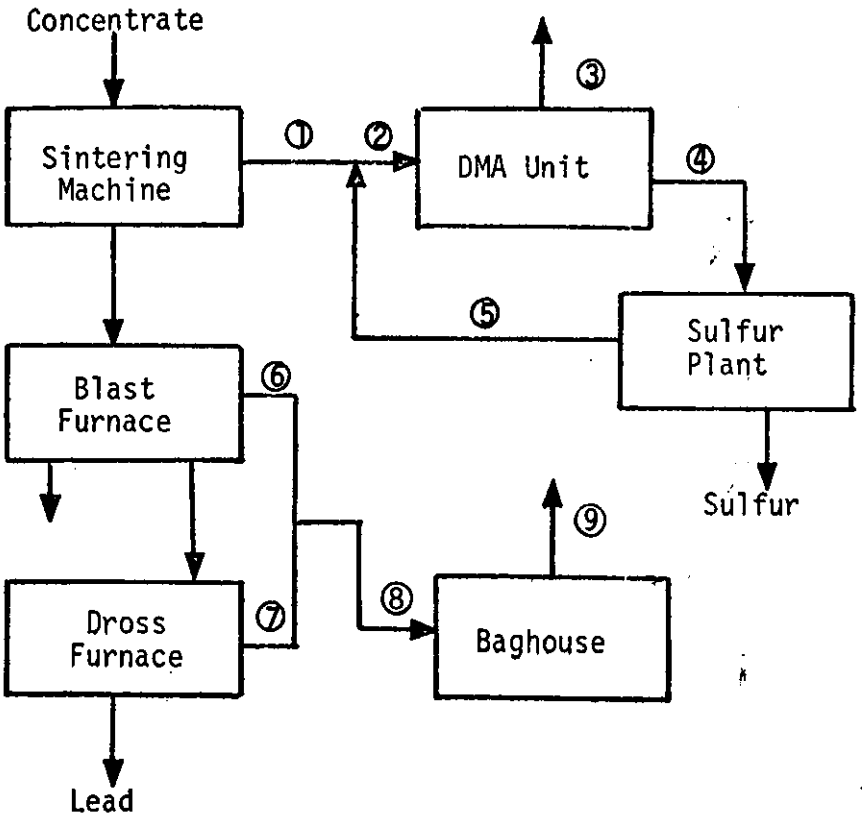

	①	②	③	④	⑤	⑥
hr/day	24	24	24	24	24	24
SCFM	33,000	36,300	34,500	1800	3300	
% SO_2	5.0	5.0	0.05	100	5.5	
% O_2	6.5					
Sulfur						104 TPD

	⑦	⑧	⑨
hr/day	24	24	24
SCFM	22,500	20,000	42,500
% SO_2	0.5	0.3	0.3
% O_2	19		

	Reduction	Methane
hr/day		24
SCFM		900

Figure I-33. Model lead facility - Case III(a), material balance

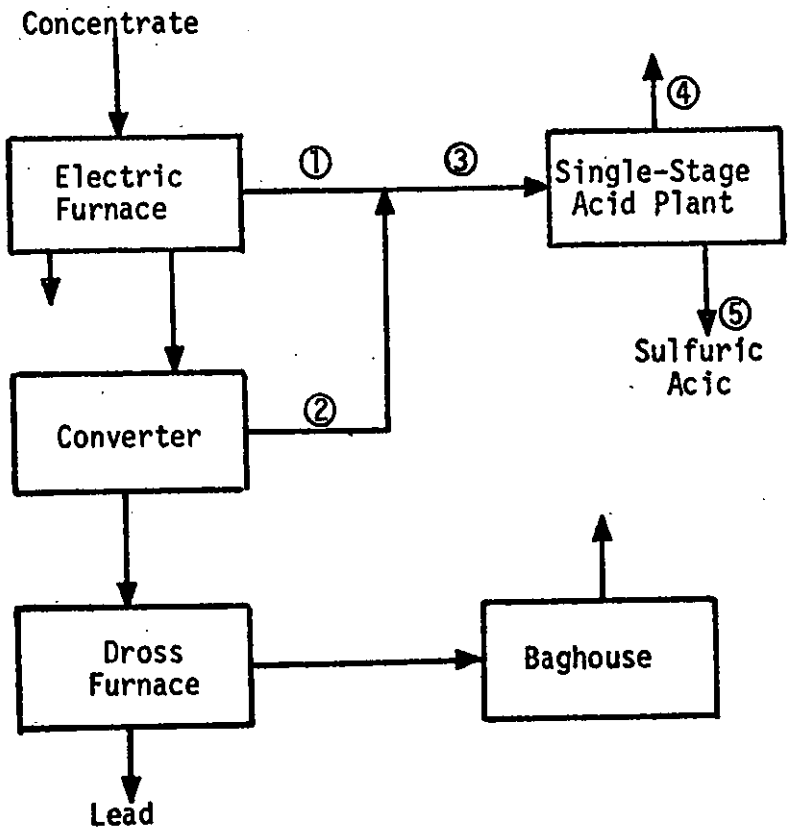

	①	②	③	
hr/day	24	2	22	2
SCFM	10,000	18,000	16,200	31,100
% SO_2	10	8	6.25	7.5
% O_2	0	14	8.0	10.25

	④		⑤
hr/day	22	2	
SCFM	14,700	27,700	
% SO_2	0.2	0.2	
% O_2			
H_2SO_4			219 TPD (100%)

Figure I-34. Model Lead Smelter - Material Balance for Case III(b)

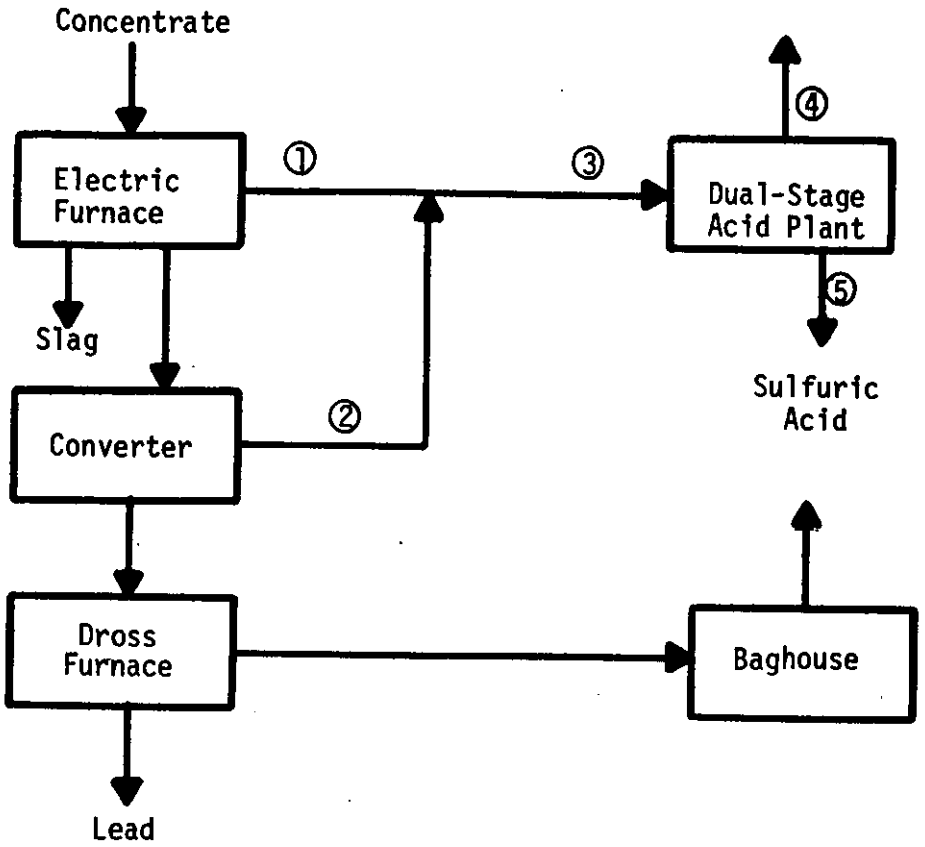

	①	②	③		④		⑤
hr/day	24	2	22	2	22	2	24
SCFM	10,000	18,000	16,200	31,100	14,700	27,600	
% SO_2	10	8	6.25	7.5	0.05	0.05	
% O_2		14	8	10.5			
H_2SO_4							
Sulfur							224 TPD

Figure I-35. Model lead facility - Case III(c), material balance

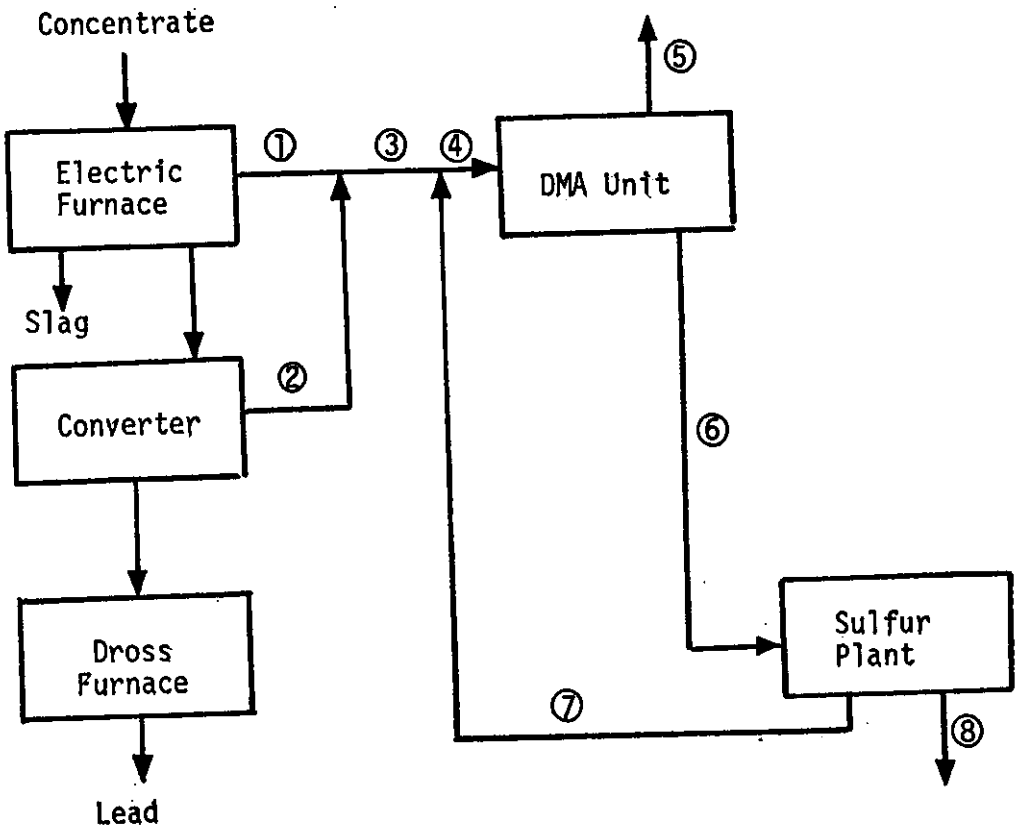

	①	②	③		④		⑤	
hr/day	22	2	22	2	22	2	22	2
SCFM	10,000	18,000	10,000	28,000	10,900	30,100	12,000	32,600
% SO_2	10	7	10	8	0.05	0.05	9.25	7.75
% O_2		14		9				

	⑥		⑦		8
hr/day	22	2	22	2	24
SCFM	1100	2500	2000	4600	
% SO_2	100	100	5.5	5.5	
% O_2					
Sulfur					70 TPD

	Reduction	Methane
hr/day	22	2
SCFM	500	1200

Appendix II

Outline of Group II-A NSPS Development

Appendix II

Outline of Group II-A NSPS Development

Date	Development Activity
8/71 - 4/72	Surveyed and reviewed process operations and emission control systems at all domestic copper (15), lead (6) and zinc smelters (10).
9/16/71	Meeting with American Mining Congress to explain and discuss NSPS development (Washington, D.C.)
5/2/72	Meeting with American Mining Congress to discuss EPA emission testing program and the general aquisition of data by EPA (Durham, N.C.)
5/72	Emission testing program formulated and specific copper, lead and zinc smelters selected as test sites.
5/72	Zinc smelter emission testing program initiated and completed: one single-absorption sulfuric acid plant operating on off-gases from a fluid-bed roaster tested at the ASARCO zinc smelter in Columbus, Ohio (5/23-27/72) Lead smelter emission testing program initiated and completed: one baghouse operating on the off-gases from the blast furnace tested at the ASARCO lead smelter in Glover, Missouri (5/15-17/72) one single-absorption sulfuric acid plant operating on the strong off-gas stream from the sintering machine tested at the Missouri Lead smelter in Boss, Missouri (5/23-27/72)
6/72	Copper smelter emission testing program initiated and completed: a) two single-absorption sulfuric acid plants operating on the off-gases from copper converters tested at the Kennecott copper smelter in Garfield, Utah (6/12-16/72)

	one single-absorption sulfuric acid plant operating on the off-gases from the copper converters tested at the ASARCO copper smelter in Hayden, Arizona (6/19-23/72)
7/72-8/72	Review of the technical literature and contacts with various engineering design/construction firms to identify "well-controlled" foreign copper, lead and zinc smelting operations.
8/72-9/72	Specific European and Japanese copper, lead and zinc smelters contacted and visited to observe and discuss process operations and emission control systems.
9/72	Letters sent to various domestic copper, lead and zinc smelters requesting specific information pertaining to process, emissions and economic factors under Section 114 of the Clean Air Act.
	Plans formulated for long-term continuous monitoring of sulfur dioxide emissions from a single-absorption sulfuric acid plant operating on the off-gases from the copper converters at the Kennecott copper smelter located in Garfield, Utah.
9/28/72	Meeting with the American Mining Congress to discuss purpose and intent of EPA letters requesting information under Section 114 of the Clean Air Act (Durham, N. C.)
9/72-11/72	Developed first draft of EPA Technical Report - Primary Copper, Lead and Zinc Smelters for inclusion in the NSPS Background Information Document - Primary Copper, Lead and Zinc Smelters.
	Reviewed possible options concerning both the identification of affected facilities to which the NSPS should apply and the type of emission limitation which should be incorporated into the NSPS.
10/72-12/72	Continuous monitoring of sulfur dioxide emissions from a single-absorption sulfuric acid plant operating on copper converter off-gases at the Kennecott copper smelter carried out.

11/1-2/72	Meeting with NAPCTAC to review first draft of the Technical Report - Primary Copper, Lead and Zinc Smelters (Washington, D.C.)
11/20/72	Meeting with Primary Non-Ferrous Smelter Working Committee to review the development of NSPS for copper, lead and zinc smelters and to solicit information from other programs within EPA concerning the impact of copper, lead and zinc smelter NSPS in various environmental sectors other than air (Durham, N.C.)
11/30/72	Meeting with the American Mining Congress to review first draft of the Technical Report - Primary Copper, Lead and Zinc Smelters (Durham, N.C.)
12/12/72	Meeting with NAPCTAC to review the selection of affected facilities to which the NSPS is applicable and the type of emission limitation incorporated into the NSPS (Denver, Colo.)
12/19/72	Meeting with Federal Agency Liaison Committee to review the development of copper, lead and zinc NSPS and the Technical Report - Primary Copper, Lead and Zinc Smelters (Washington, D.C.)
12/72-2/73	Developed emission control costs associated with various NSPS for a wide range of emission control strategies and smelting processes
1/73	Letters sent to various sulfuric acid plant vendors requesting specific information pertaining to operation and emissions from both single- and double-absorption acid plants.
2/73	Letters sent to various European and Japanese copper, lead and zinc smelters requesting specific information pertaining to emissions from double-absorption acid plants. (Replies in answer to these inquiries were never received in most cases.)
	Letters sent to various off-gas scrubbing system vendors requesting specific information pertaining to operation and emissions from various off-gas scrubbing systems

3/73	Evaluation of continuous monitoring emission data gathered on a single-absorption sulfuric acid plant operating on the off-gases from the copper converters at the Kennecott copper smelter at Garfield, Utah
4/73	Plans formulated for continuous monitoring of sulfur dioxide emissions from 1. a double-absorption sulfuric acid plant operating on the off-gases from the copper converters at the ASARCO copper/lead smelter in El Paso, Texas 2. a DMA off-gas scrubbing system operating on the off-gases from both the reverberatory furnace and the copper converters at the Phelps-Dodge copper smelter in Ajo, Arizona 3. an ammonia off-gas scrubbing system operating on the combined off-gases from a lead sintering machine at the Cominco lead smelter in Trail, B.C., Canada
4/27/73	Meeting with Monsanto and Davy Power Gas (formerly Wellman Power Gas) to discuss in depth operation and emissions from both single-and double-absorption sulfuric acid plants (Durham, N. C.)
4/73-7/73	First draft of the proposed NSPS and the Background Information Document--primary copper, lead and zinc smelters developed.
5/31/73	Meeting with NAPCTAC to review proposed NSPS and the Background Information Document (Raleigh, N.C.)
6/73	Continuous monitoring of sulfur dioxide emissions from a double-absorption sulfuric acid plant operating on the off-gases from the copper converters at the ASARCO copper/lead smelter in El Paso, Texas, initiated
6/12/73	Meeting with the American Mining Congress to review the proposed NSPS and the Background Information Document (Durham, N.C.)
6/29/73	Meeting with the American Mining Congress to discuss the concept of modification (Washington, D.C.)

7/73-9/73	Proposed NSPS and the Background Information Document reviewed by EPA's Office of the Assistant Administrator for Air and Water Programs and by the EPA steering committee
7/73	Continuous monitoring of sulfur dioxide emissions from a DMA scrubbing system operating on the off-gases from a copper reverberatory smelting furnace and copper converters at the Phelps-Dodge copper smelter in Ajo, Arizona, initiated
9/73	Continuous monitoring of sulfur dioxide emissions from an ammonia scrubbing system operating on the off-gases from a lead sintering machine at the Cominco lead smelter in Trail, British Columbia, Canada, initiated
9/6/73	Meeting with Mr. J. Henderson, representing the American Mining Congress, to discuss the proposed NSPS and the Background Information Document (Durham, N.C.)
10/9/73	Proposed NSPS and the Background Information Document submitted to the Federal Agency Liaison for distribution to, and review by, the various Federal agencies
10/17/73	Proposed NSPS and the Background Information Document distributed to EPA Regional Offices for review
10/29-11/4/73	Opacity of effluent emissions released to the atmosphere from a double-absorption sulfuric acid plant and a lead blast furnace baghouse at the ASARCO El Paso, Texas, copper/lead smelter monitored and recorded
11/73	Contract initiated with the Arthur D. Little Co. in Boston, Massachusetts, to investigate both the limitations of copper flash and electric smelting compared to conventional domestic copper reverberatory smelting, with regard to the elimination of impurities and the ability to process copper precipitates and secondary copper scrap, and the impact of these limitations on the domestic copper smelting industry
11/9/73	Meeting with Dr. P. Queneau and Dr. H. Kellogg of Dartmouth College and Columbia University, respectively, to discuss the proposed NSPS and the Background Information Document (Hanover, N. H.)

12/73	Continuous monitoring of sulfur dioxide emissions from the double-absorption sulfuric acid plant at the ASARCO copper/lead smelter in El Paso, Texas, and the ammonia scrubbing system at the Cominco lead smelter in Trail, British Columbia, brought to a conclusion
12/73-1/74	Comments received from various Federal agencies concerning the proposed NSPS and the Background Information Document reviewed and evaluated
1/74-2/74	Second draft of the proposed NSPS and the Background Information Document developed
1/23/74	Meeting with Mr. F. Templeton representing the American Mining Congress to discuss the concept of modifications as related to the NSPS (Durham, N. C.)
2/5-6/74	Opacity of effluent emissions released to the atmosphere from a lead blast furnace baghouse at the ASARCO El Paso, Texas, copper/lead smelter observed and recorded.
5/22/74	Meeting with NAPCTAC to review draft regulations for modified sources under section 111 of the Act. Representatives of American Mining Congress commented on draft regulations as related to copper smelters.

Appendix III

Analysis of Continuous SO_2 Monitor Data and Determination of an Upper Limit for Sulfuric Acid Plant Catalyst Deterioration

Appendix III

Analysis of Continuous SO_2 Monitor Data and Determination of an Upper Limit for Sulfuric Acid Plant Catalyst Deterioration

Emission Variation

Sulfur dioxide emissions from the No. 7 sulfuric acid plant, which is the newest of five single-stage absorption plants that are operating on the off-gases from the nine Kennecott copper converters at Garfield. Utah, were analyzed. The emissions were recorded by a DuPont #460 Continuous SO_2 Analyzer from September 15, 1972, to November 15, 1972. This instrument is capable of measuring SO_2 concentrations within + 150 ppm (2% of full scale) and automatically zeroes itself every 8-1/2 minutes. The zero calibration procedure requires 1-1/2 minutes; thus the instrument is "on-line" 85% of the time.

A general review of the data generated revealed that several periods of data were missing due to problems with the recorder. Other segments contained long periods of plant shutdowns for maintenance or included concentrations that were obviously greater than the upper limit of the monitor. (A shorter absorption tube could have been installed to increase the upper limit of the monitor, if this situation had been noticed sooner.) Consequently, on the basis of data legibility and continuity, the periods of October 11-27, 1972, and November 8-15, 1972, were selected as representative of the two-month monitoring period.

Periods of emissions during which the average concentration appeared to be greater than 3000 ppm or less than 1000 ppm were then noted. Eighteen periods during which emissions exceeded 3000 ppm, including two periods during which emissions exceeded the recording capacity of the DuPont analyzer (7500 ppm), were identified. Fourteen periods during which emissions were less than 1000 ppm were also identified. Acid plant operating logs and inlet SO_2 volume and concentration continuous monitor data were analyzed to ascertain if upsets, malfunctions, or startups and shutdowns occurred during these periods.

One major upset/malfunction was discerned. This occurred during one of the two periods during which the emissions exceeded the recording capacity of the analyzer. The upset/malfunction resulted from prolonged low inlet SO_2 concentrations which caused a decrease in the normal temperature increase across the first catalyst bed. Consequently, this period of excessive emissions was deleted from the data. Six shut-downs and start-ups were noted. The six periods of low emissions following these shutdowns were deleted from the data because the acid plant was not in operation. Two periods of high emissions were identified following two of the six start-ups. These

two periods of high emissions were also deleted from the data. Due to the time constraints placed on the analysis of these data, no investigation of why four of these six start-ups had no associated periods of high emissions was conducted. A brief investigation of the eight remaining periods during which emissions were less than 1000 ppm, however, did reveal that these low emissions appeared to be the result of almost ideal operating conditions within the acid plant, with somewhat low inlet gas volumes and SO_2 concentrations and a minimum of fluctuations in either of these variables.

Following this review of acid plant operating data, fifteen periods during which emissions were higher than 3000 ppm remained. This included one of the two periods previously identified as periods during which emissions exceeded the capacity of the DuPont analyzer. This period was then deleted from the data for the following reasons. First, and most important, since no knowledge concerning numerical values of emissions was available, this time period could not be mathematically accounted for in the analysis. Second, because emissions were apparently so great, this period of operation would represent a violation of any reasonable standard developed and thus would add nothing to the analysis of "normal" operating emissions data to provide a basis for such standards.

The long-term SO_2 emissions concentration average was then calculated for all the data generated during the "normal operating" portions of the October 11-27 and November 8-15 periods. Fifteen-minute instantaneous SO_2 concentration values were used for this calculation, and the long-term emission average was determined to be 1700 ppm. It is significant to note that this value is considerably less than the emission concentration corresponding to Monsanto's guaranteed conversion efficiency of 95% conversion of SO_2 to SO_3 at 5% SO_2 inlet, i.e., approximately 2700 ppm.

The fourteen periods of high emissions that were not deleted from the data were then examined by averaging these periods over various time intervals using the fifteen-minute instantaneous SO_2 concentration values identified during the above analysis. The time-averaged concentrations were then compared to various outlet SO_2 concentration levels to determine the extent to which such averaging periods mask variations in outlet concentration. The results are tabulated in the attached Tables III-1 and III-2.

Seven of the fourteen high-emission periods exceeded 2700 ppm (equivalent to the manufacturer's guarantee) when averaged for a six-hour duration. Increasing the averaging time to seven hours decreased the number of periods exceeding 2700 ppm to five. Further increases in the averaging period resulted in only minor decreases in the number of periods exceeding 2700 ppm. Increasing the level of average SO_2 emission concentration from 2700 ppm to 3000 ppm

(approximately 10%) caused a significant reduction of the number of high-emission periods that exceeded this level as compared with 2700 ppm. For each time-averaging interval, the number of periods for which the averages exceed 3000 ppm is about half the number of periods corresponding to 2700 ppm. Increasing the level of average SO_2 emission concentration from 2700 to 3250 ppm (approximately 20%) resulted in only a slight decrease in the number of periods exceeding this level compared to the number of periods exceeding 3000 ppm. In general, therefore, increasing either the averaging time to periods greater than six hours, or increasing the average SO_2 emission concentration selected for comparison by more than 10% above the manufacturers guarantee, does not significantly decrease the number of high-emission periods that exceed the level of SO_2 emission concentration selected for comparison.

Another approach is to examine the actual time during which SO_2 emissions exceeded various selected concentration levels, such as 2700, 3000, and 3250 ppm. These data are tabulated in Table III-2. An examination of these data leads to the same conclusions presented above. Thus, based on this analysis and not considering catalyst deterioration, it appears that an averaging time of six hours is suitable for determining SO_2 emission concentrations, and that emissions levels established somewhat above commonly accepted vendor/contractor guarantees by 10-20% could be viewed as acceptable for purposes of allowing normal, short-term fluctuations.

Catalyst Deterioration

Due to the lack of substantial numerical qualification of the effect of catalyst deterioration on SO_2 emissions from sulfuric acid plants, SO_2 emission data gathered by simultaneous EPA source testing of the No. 6 and No. 7 plants at the Kennecott Garfield smelter during the period of June 13-16, 1972, were analyzed. The No. 6 (Parsons) plant began operating in February 1967 and was in the second month of its twelve-month catalyst cleaning cycle during the source test. The No. 7 (Monsanto) plant began operation in September 1970, and was in the twelfth and last month of its catalyst cleaning cycle. The SO_2 emission data are tabulated in the attached Table III-3.

A statistical analysis of this data leads to the conclusion that the 30% greater average emissions of the No. 7 plant, compared to the average emissions of the No. 6 plant, are statistically significant at the 90% probability level. It should be noted, however, that this difference in emissions reflects not only catalyst deterioration but other factors as well, such as a difference in emissions due to design or construction variations between Parsons 1967 acid plant technology and Monsanto 1970 acid plant technology. On the other hand, it is probably safe to assume that the major portion of this difference in emissions is due to catalyst deterioration. Thus, the results of this analysis can be viewed as indicating first, that catalyst

deterioration does have a significant effect on SO_2 emissions and second, that with a twelve-month catalyst cleaning cycle this difference in emissions due to deterioration appears to be of the order of magnitude of 30%.

Additive Effect of Emission Variations and Catalyst Deterioration

As discussed above, not considering catalyst deterioration, sulfuric acid plant performance standards based on six-hour SO_2 emission levels 10-20% greater than commonly accepted vendor/contractor guarantees appear to be appropriate to allow short-term fluctuations in SO_2 emissions. As also discussed above, the increase in SO_2 emissions during the twelve-month catalyst cleaning cycle can be estimated to be 30%. Based on the conservative assumption that catalyst deterioration is an increasing exponential function of time, almost all of the effect of catalyst deterioration will occur during the second half of the cleaning cycle. Since the emission variation data were based on the fifth month of the catalyst cleaning cycle, the data do not include significant catalyst deterioration and the increase in SO_2 emissions due to catalyst deterioration should be added to the allowance for new catalyst emission variation. Thus, considering short-term fluctuations of SO_2 emissions and using conservative assumptions regarding catalyst deterioration, new source performance standards can possibly be based upon six-hour emission levels established 40-50% greater than commonly accepted vendor/contractor guarantees.

Table III-1

Periods Exceeding Concentration

Concentration (ppm)	4-hr avg.	6-hr avg.	7-hr avg.	8-hr avg.	12-hr avg.
2700	13	7	5	5	3
3000	8	4	3	3	1
3250	5	3	3	2	0

Table III-2

Time Exceeding Concentration (Hrs.)

Concentration (ppm)	4-hr avg.	6-hr avg.	7-hr avg.	8-hr avg.	12-hr avg.
2700	112 (21)[1]	76 (14)[1]	62 (11)[1]	62 (11)[1]	42 (8)[1]
3000	61 (11	40 (7)	33 (6)	33 (6)	13 (2)
3250	40 (7)	30 (6)	30 (6)	22 (4)	0 (0)

Note

1. Percentage of time for which the emissions would exceed the reference concentration. The total "normal" operating time of 542 hours equals 100%.

Table III-3

Outlet SO_2 Concentrations (ppm)

Run	No. 6 Plant	No. 7 Plant
2	389	296
3	753	855
4	1036	2277
5	1745	1207
6	938	1131
7	1608	2553
8	794	1104
9	1128	1355
10	930	1433
Average	1036	1357

Appendix IV

Model Smelter Energy Balances

Table IV-1 Energy Requirements

Copper Smelting

(Basis: 1000 ton concentrates/day - 270 ton copper/day)

	Reverberatory Smelting		Electric Smelting		Flash Smelting
	Green Charge	Calcine Charge	Green Charge	Calcine Charge	
I. Basic Process					
1. Unit Operations					
Concentrate Drying					
Fuel demand, kw-hr/hr	-	-	20	-	20
Power demand, kw-hr/hr	-	-	45	-	45
Roasting					
Power demand, kw-hr/hr	-	95	-	95	-
Waste-heat recovery power generated, kw-hr/hr	-	335	-	335	-
Smelting Furnace					
Fuel demand, MM Btu/hr	335	170	-	-	30
Power demand, kw-hr/hr	-	-	25,000	15,000	650
Waste-heat recovery power generated, kw-hr/hr	8325	4220	-	-	2100
Converters					
Power demand, kw-hr/hr	1650	900	1650	900	770
Waste-heat recovery power generated, kw-hr/hr	1990	1135	1990	1135	980
Slag Treatment					
Power demand, kw-hr/hr	-	-	-	-	1580
Anode Furnace					
Fuel demand, MM Btu/hr	10	10	10	10	10
General Plant Utilities					
Power demand, kw-hr/hr	6040	6040	6040	6040	6040

Table IV-1 Energy Requirements (con't)

Copper Smelting

	Reverberatory Smelting Green Charge	Reverberatory Smelting Calcine Charge	Electric Smelting Green Charge	Electric Smelting Calcine Charge	Flash Smelting
I. Basic Process (con't)					
2. Gross Energy Requirements					
Fuel, MM Btu/hr	345	180	30	10	60
Power					
process requirements, kw-hr/hr	7690	7035	32,735	22,035	9085
waste-heat recovery, kw-hr/hr					
1. minimum waste-heat recovery	-	-	-	-	-
2. moderate waste-heat recovery	8325	4220	-	-	2100
3. maximum waste-heat recovery	10,315	5690	1990	1135	3080
net power demand, kw-hr/hr/ MM Btu/hr fuel equivalent					
1. minimum waste-heat recovery	7690/75	7035/70	32,735/320	22,035/215	9085/90
2. moderate waste-heat recovery	(635)/(5)	2815/25	32,735/320	22,035/215	6985/70
3. maximum waste-heat recovery	(2625)/(25)	1345/15	30,745/300	20,900/205	6005/60
3. Net Energy Requirements, MM Btu/hr					
1. minimum waste-heat recovery	420	250	350	225	150
2. moderate waste-heat recovery	345	205	350	225	130
3. maximum waste-heat recovery	345	195	330	215	120

Table IV-1 Energy Requirements (con't)

Copper Smelting

	Reverberatory Smelting Green Charge	Reverberatory Smelting Calcine Charge	Electric Smelting Green Charge	Electric Smelting Calcine Charge	Flash Smelting
II. Emission Control					
1. Control of Strong Gas Streams					
Model No.	IV(b)	III(b)	I(b)	-	II(b)
Overall control, %	70	80	99.5	99.5	99.5
Double absorption acid plant					
power demand, kw-hr/hr	2160	2380	3210	3215	2975
fuel equivalent, MM Btu/hr	20	25	30	30	30
Acid neutralization					
power demand, kw-hr/hr	980	1130	1405	1405	1405
fuel equivalent, MM Btu/hr	10	10	15	15	15
Model No.	-	-	I(c)	-	II(c)
Overall control, %	-	-	99.5	-	99.5
DMA scrubbing/elemental sulfur plant					
fuel demand, MM Btu/hr	[illegible]	[illegible]	140	-	150
power demand, kw-hr/hr	-	[illegible]	2995	-	2595
fuel equivalent, MM Btu/hr	-	-	30	-	20

Table IV-1 Energy Requirements (con't)

Copper Smelting

	Reverberatory Smelting Green Charge	Reverberatory Smelting Calcine Charge	Electric Smelting Green Charge	Electric Smelting Calcine Charge	Flash Smelting
II. Emission Control (con't)					
2. Control of Strong and Weak Gas Streams					
Model No.	IV(c)	III(c)	-	-	-
Overall control, %	98.5	98.5	-	-	-
DMA scrubbing/double absorption acid plant power demand,					
kw-hr/hr	4710	3830	-	-	-
fuel equivalent, MM Btu/hr	45	35	-	-	-
Acid neutralization power demand,					
kw-hr/hr	1405	1405	-	-	-
fuel equivalent, MM Btu/hr	15	15	-	-	-
III. Total Energy Requirements					
1. Uncontrolled, MM Btu/hr					
Minimum waste-heat recovery	420	250	350	225	150
Moderate waste-heat recovery	345	220	350	225	130
Maximum waste-heat recovery	345	195	330	215	120

Table IV-1 Energy Requirements (con't)

Copper Smelting

	Reverberatory Smelting		Electric Smelting		Flash Smelting
	Green Charge	Calcine Charge	Green Charge	Calcine Charge	
III. Total Energy Requirements (con't)					
2. Control of Strong Gas Streams, MM Btu/hr					
Model No.	IV(b)	III(b)	I(b)	-	II(b)
Overall control, %	70	80	99.5	99.5	99.5
Double absorption acid plant/acid neutralization					
minimum waste-heat recovery	440/450	270/285	380/395	255/270	180/190
moderate waste-heat recovery	360/370	230/240	380/395	255/270	155/170
maximum waste-heat recovery	345/350	215/225	360/375	245/260	150/160
Model No.	-	-	I(c)	-	II(c)
Overall control, %	-	-	99.5	-	99.5
DMA scrubbing/elemental sulfur plant					
minimum waste-heat recovery	-	-	520	-	325
moderate waste-heat recovery	-	-	520	-	305
maximum waste-heat recovery	-	-	500	-	295

Table IV-1 Energy Requirements (con't)

Copper Smelting

	Reverberatory Smelting		Electric Smelting		Flash Smelting
	Green Charge	Calcine Charge	Green Charge	Calcine Charge	
III. Total Energy Requirements (con't)					
3. Control of Strong and Weak Gas Streams, MM Btu/hr					
Model No.	IV(c)	III(c)	-	-	-
Overall control, %	98.5	98.5	-	-	-
DMA scrubbing/double absorption acid plant/ acid neutralization minimum waste-heat recovery	465/480	285/300	-	-	-
moderate waste-heat recovery	385/400	245/260	-	-	-
maximum waste-heat recovery	365/380	230/245	-	-	-

Table IV-2 Energy Requirements

Zinc Smelting

(Basis: 550 ton concentrates/day - 300 ton zinc/day)

	Electrolytic Extraction	Pyrometallurgical Reduction Electrothermic	Pyrometallurgical Reduction Vertical Retort
I. Basic Process			
1. Unit Operations			
Roasting			
Power demand, kw-hr/hr	1970	1970	1970
Waste-heat recovery power generated, kw-hr/hr	1325	1325	1325
Electrolytic extraction			
Power demand, kw-hr/hr	41,035	-	-
Sintering			
Power demand, kw-hr/hr	-	1560	1560
Fuel demand, MM Btu/hr	-	75	30
Reduction			
Power demand, kw-hr/hr	-	37,750	-
Fuel demand, MM Btu/hr	-	265	775
Fuel recovery, MM Btu/hr	-	25	-
Refining			
Fuel demand, MM Btu/hr	-	60	60
General Plant Utilities			
Power demand, kw-hr/hr	10,730	9470	9470
2. Energy Requirements			
Fuel, MM Btu/hr	-	375	865
Power, kw-hr/hr/MM Btu/hr fuel equivalent	52,410/510	49,425/480	11,675/115
3. Net Energy Requirements, MM Btu/hr	510	855	980

Table IV-2 Energy Requirements (con't)

Zinc Smelting

	Electrolytic Extraction	Pyrometallurgical Reduction Electrothermic	Pyrometallurgical Reduction Vertical Retort
II. Emission Control			
Model No.	II(b)	I(b)	I(b)
Overall control, %	99.5	96.5	96.5
Double absorption acid plant			
power demand, kw-hr/hr	1365	1365	1365
fuel equivalent, MM Btu/hr	15	15	15
Acid neutralization			
power demand, kw-hr/hr	860	845	845
fuel equivalent, MM Btu/hr	10	10	10
Model No.	II(c)	I(d)	I(d)
Overall control, %	99.5	96.5	96.5
Elemental sulfur plant/Wellman scrubbing			
fuel demand, MM Btu/hr	140	140	140
power demand, kw-hr/hr	1685	1685	1685
fuel equivalent, MM Btu/hr	15	15	15
III. Total Energy Requirements			
1. Uncontrolled, MM Btu/hr	510	855	980
2. Controlled, MM Btu/hr			
Model No.	II(b)	I(b)	I(b)
Overall control, %	99.5	96.5	96.5
Double absorption acid plant/ acid neutralization	525/535	870/880	990/880
Model No.	II(c)	I(d)	I(d)
Overall control, %	99.5	96.5	96.5
Elemental sulfur plant/Wellman scrubbing	670	1015	1140

Table IV-3 Energy Requirements

Lead Smelting

(Basis: 550 ton concentrates/day - 300 ton lead/day)

	Conventional Sintering	Gas Recirculation Sintering
I. Basic Process		
1. Unit Operations		
Sintering		
Power demand, kw-hr/hr	1875	2250
Blast Furnace		
Power demand, kw-hr/hr	265	265
Fuel demand, MM Btu/hr	65	65
Refining		
Fuel demand, MM Btu/hr	70	70
General Plant Utilities		
Power demand, kw-hr/hr	9470	9470
2. Energy Requirements		
Fuel, MM Btu/hr	135	135
Power, kw-hr/hr/MM Btu/hr fuel equivalent	11,610/115	11,985/115
3. Net Energy Requirements, MM Btu/hr	250	250
II. Emission Control		
1. Control of Strong Gas Streams		
Model No.	I(b)	II(b)
Overall control, %	68.5	91.0
Double absorption acid plant		
power demand, kw-hr/hr	645	1150
fuel equivalent, MM Btu/hr	5	10
Acid neutralization		
power demand, kw-hr/hr	400	535
fuel equivalent, MM Btu/hr	5	5

Table IV-3 Energy Requirements (con't)

Lead Smelting

	Conventional Sintering	Gas Recirculation Sintering
II. Emission Control (con't)		
Model No.	-	II(d)
Overall control, %	-	91.0
DMA scrubbing/elemental sulfur plant		
fuel demand, MM Btu/hr	-	55
power demand, kw-hr/hr	-	1275
fuel equivalent, MM Btu/hr	-	10
2. Control of Strong and Weak Gas Streams		
Model No.	I(c)	-
Overall control, %	89.0	-
DMA scrubbing/double absorption acid plant		
power demand, kw-hr/hr	2930	-
fuel equivalent, MM Btu/hr	30	-
Acid neutralization		
power demand, kw-hr/hr	535	-
fuel equivalent, MM Btu/hr	5	-

Table IV-3 Energy Requirements (con't)

	Lead Smelting	
	Conventional Sintering	Gas Recirculation Sintering
III. Total Energy Requirements		
1. Uncontrolled, MM Btu/hr	250	250
2. Control of Strong Gas Stream, MM Btu/hr		
Model No.	I(b)	II(b)
Overall control, %	68.5	91.0
Double absorption acid plant/ acid neutralization	255/260	265/270
Model No.	-	II(d)
Overall control, %	-	91.0
DMA scrubbing/elemental sulfur plant	-	320
3. Control of Strong and Weak Gas Stream, MM Btu/hr		
Model No.	I(c)	-
Overall control, %	89.0	-
DMA scrubbing/double absorption acid/acid neutralization	275/280	-

Appendix V

Manual Sulfur Dioxide Tests Performed at Single-Stage Acid Plants

SULFUR DIOXIDE EMISSION TEST RESULTS

Preliminary to the start of emissions testing in May 1972, all sulfur dioxide control systems operating at domestic primary nonferrous smelters were surveyed to determine the effectiveness of control devices at these sources. From the source survey evaluations, the facilities which exhibited the most advanced control systems in terms of design and reduction of SO_2 emissions were selected for emissions test by EPA. The sources selected include single-absorption acid plants which treat gases from one zinc smelter roaster, one lead smelter sintering machine, and three copper smelter converter operations. All affected facilities were tested for SO_2 emissions using Reference Method 8 contained in Title 40 of the Code of Federal Regulations, Part 60 (40 CFR 60), Appendix A, first published in the Federal Register on December 23, 1971. Later, a double-absorption acid plant was installed at a copper smelter, and this facility was also tested. The analysis of this test is included in Appendix VI.

Single-Absorption Acid Plants

During the initial portion of the testing program, the best domestic SO_2 control technology was considered to be single-absorption acid plants, described in Section 4.1, Sulfuric Acid Plants, of this document. It was determined that a testing program including one acid plant at a lead smelter, one at a zinc smelter, and three at copper smelters would give sufficient emissions data to cover the range of smelting operations to which standards would be applicable. That includes the relatively

constant SO_2 concentrations and volumetric flow rate to zinc roaster acid plants to the highly variable inlet SO_2 concentration and flow rate to copper converter acid plants.

All single-absorption acid plant tests were initially conducted using Method 8 of 40 CFR 60. However, to gain long-term operational data, a continuous monitoring test program of eight weeks duration was also conducted at one copper smelter acid plant installation. Continuous monitoring data were required because of the unsteady nature of some smelter SO_2 gas streams. Typical of unsteady emission streams are those from copper converter operations. The converter operation is a batch operation and, depending upon the number of converters in operation and their phasing, will produce SO_2 concentrations and flow rates ranging from 0% to approximately 9% SO_2 and a flow rate from 0 to the maximum blowing capacity of the converters.

Plant operating logs, the acid plant inlet cfm charts, absorber and converter temperature charts and inlet concentration charts were reviewed to determine the operating condition of the acid plant during the continuous monitoring program. The periods of startup and shutdown were eliminated from the data analysis. The long-term SO_2 emission concentration averages were determined from the remaining valid data points. Finally, various averaging techniques were used to determine the most appropriate averaging interval, thereby eliminating the effect of massive short-term fluctuations. Similar data evaluation procedures were used to analyze dual-stage acid plant continuous monitoring data.

Facility Test

Missouri Lead Operating Company (AMAX), Boss, Missouri

The Missouri Lead Operating Company acid plant, which treats a portion of the effluent from a lead sintering machine, was tested between May 22 and 24, 1972. The test consisted of three separate runs for sulfuric acid mist and SO_2 emissions from the acid plant using Method 8 of 40 CFR 60. Three runs for SO_2 emissions from a weak SO_2 stream, using Method 6 of 40 CFR 60, were also performed.

The sintering machine is a 60 m^2 Lurgi updraft machine. It has a design feed rate of 90 metric tons per hour and a finished sinter production rate of 40 metric tons per hour. The lead concentrate which is processed has an analysis of approximately 70% lead and 15% sulfur. The concentrate has only a minor amount of the impurities found in most lead concentrates. There are two emission streams from the machine:

(a) A strong SO_2 stream of approximately 22,000 scfm is ducted to the acid plant, and

(b) A weak SO_2 stream of approximately 40,000 scfm is vented via a particulate control baghouse to the atmosphere.

The SO_2 concentration of the strong stream ranges between 5 and 7% during normal operation of the sintering machine. The weak stream, taken from the last two-thirds of the sintering machine, has an average SO_2 concentration of approximately 0.4% SO_2.

The sintering machine was processing approximately 1001 x 10^2 kg/hr (110 tons/hr) of sinter, or 18,200 kg/hr (20 tons/hr) above reported

normal operating conditions. The machine grate speed averaged between 0.76 and 0.82 m/min (30 and 32 in/min). This speed is approximately 0.20 m/min below normal operating speed; however, that reduction can be attributed to the greater charge rate reported during the test.

The sulfuric acid plant is a Monsanto-designed, three-stage, 200 ton/day unit. The acid plant commenced operation in 1968. The plant is designed to accommodate the variations in SO_2 concentrations in the inlet gas stream ranging from a low of approximately 4% SO_2 to a high of 8% SO_2. Tables V-1 and 2 summarize the emissions test results from the strong and weak streams, respectively.

ASARCO, Columbus, Ohio

The ASARCO primary zinc smelter at Columbus, Ohio, is a custom smelter which produces zinc oxide. The facility was tested May 24-27, 1972. The test program consisted of four separate runs for sulfur acid mist and SO_2 emissions from the zinc roaster acid plant. Method 9 of 40 CFR 60 was used for the test.

The smelter uses a Lurgi fluid-bed roaster to produce zinc oxide calcine. The roaster has a design capacity of 149 metric tons per day, and it was operating at a 155-metric-tons-per-day production rate during the test. The average analysis of the concentrate delivered to the roaster is 62% zinc and 30% sulfur.

A Monsanto-designed, 158-metric-tons-per-day, single-absorption acid plant controls the emissions from the zinc roaster. It was constructed in 1968 and has four catalytic stages. The acid plant

Table V-1

Missouri Lead Operating Company
Lead Sintering Machine Acid Plant
May 1972

Run Number	1	2	3	Arithmetic Average
Date	May 23, 1972	May 24, 1972	May 24, 1972	
Test time (min.)	120	120	120	120
Stack effluent:				
Flow rate, dscm/min (dscfm)	621 (22,200)	631 (22,550)	624 (22,300)	(22,350)
Temperature, °C (°F)	88 (191)	83 (181)	86 (186)	86 (186)
Pressure, mm Hg (in. Hg)	719 (28.30)	719 (28.30)	719 (28.30)	719 (28.30)
Acid plant SO_2 emissions:				
PPM (by volume)	2900	3406	3006	3104
kg/dscm (lb/dscf)	37.3×10^{-3} (48×10^{-5})	43.5×10^{-3} (56×10^{-5})	38.9×10^{-3} (50×10^{-5})	40×10^{-3} (51×10^{-3})
kg/hr (lb/hr)	1480 (640)	1679 (763)	1465 (666)	1541 (700)
Sinter machine feed rate, metric tons/hour	103 (113)	96 (106)	96 (106)	98 (108)

Table V-2

Missouri Lead Operating Company
Lead Sintering Machine Weak Stream

Run Number	1	2	3	Arithmetic Average
Date	May 23, 1972	May 24, 1972	May 25, 1972	
Test time (min.)	120	120	120	120
Stack effluent:				
Flow rate, dscm/min (dscfm)	1107 (39,526)	1215 (43,409)	1215 (43,409)	1179 (42,115)
Temperature, °C (°F)	295 (564)	292 (558)	292 (558)	293 (560)
Pressure, mm Hg (in. Hg)	719 (28.30)	719 (28.30)	719 (28.30)	719 (28.30)
Acid plant SO_2 emissions:				
PPM (by volume)	4995	2643	4125	3921
kg/dscm (lb/dscf)	64.5×10^{-3} (83×10^{-5})	34.2×10^{-3} (44×10^{-5})	52.8×10^{-3} (68×10^{-5})	50.5×10^{-3} (65×10^{-5})
kg/hr (lb/hr)	4314 (1961)	2495 (1139)	3912 (1778)	3577 (1626)
Sinter machine feed rate:				
Charge rate, metric tons/hr (tons/hr)	103 (113)	96 (106)	96 (106)	98 (108)

is designed to process approximately 12,000 scfm of gas at a 6% SO_2 concentration.

Table V-3 summarizes the emission test results from the ASARCO smelter.

ASARCO, Hayden, Arizona

The ASARCO Hayden, Arizona, smelter is a custom copper smelter. The smelter's copper converter single-absorption acid plant was tested during the week of June 19, 1972. The test consisted of eight separate runs using Method 8 for 40 CFR 60. Two of the test runs were aborted due to malfunction of either the test equipment or the acid plant. Test number 1 consisted of two samples, one for each orthogonal axis. Their results were then combined to determine the emissions rate for the test. In addition to the manual tests, continuous SO_2 monitoring was performed at the site for two days. The continuous monitoring test was intended to provide data for comparison with the manual method and continuous monitoring experience for future tests. No statistical analysis of the continuous monitoring data was performed.

There are five copper converters at the smelter; each converter requires approximately 8 hours to process a batch of copper matte. The gas flow to the acid plant from the converters is as high as 100,000 scfm, depending upon the number of converters in operation. The gas stream to the acid plant has an SO_2 concentration of from 4 to 9 percent.

The converter emissions are controlled by a 750-tpd single-absorption sulfuric acid plant designed by Chemiebau - Dr. A. Zieren

Table V-3

ASARCO Zinc Smelter
Zinc Roaster Acid Plant
May 1972

Run Number	1	2	3	4	Arithmetic Average
Date	May 25	May 25	May 26	May 26	
Test time (min.)	120	120	120	120	120
Stack effluent:					
Flow rate, dscm/min (dscfm)	327 (11,800)	325 (11,600)	318 (11,350)	333 (11,900)	327
Temperature, °C (°F)	67 (153)	62 (144)	67 (153)	62 (145)	65 (149)
Pressure, mm Hg (in. Hg)	737 (29.03)	737 (29.03)	745 (29.24)	745 (29.23)	741
Acid plant SO_2 emissions:					
PPM (by volume)	2600	2000	2000	1800	2100
kg/dscm (lb/dscf)	33.1×10^{-3} (42.59×10^{-5})	25.4×10^{-3} (32.66×10^{-5})	25.22×10^{-3} (32.46×10^{-5})	23.4×10^{-3} (30.09×10^{-5})	26.8×10^{-3} (34.5×10^{-5})
kg/hr (lb/hr)	662 (301)	499 (227)	486 (221)	473 (215)	530 (241)
Roaster feed rate metric tons/hr (tons/hr)	6.5 (7.2)	6.5 (7.2)	6.5 (7.2)	6.5 (7.2)	6.5 (7.2)

GmbH of West Germany and built in 1972 by Rust Engineering, the U.S. licensee of this company. The acid plant is designed to process an inlet gas flow of up to 100,000 scfm at an SO_2 concentration of 4%. The acid plant has a four-stage capability, but only three catalytic stages were active during the test and one was blank.

Table V-4 summarizes the results of the Hayden emission tests.

Kennecott Copper Corporation, Garfield, Utah

The Kennecott Copper Corporation was tested during the week of June 19, 1972. A total of twenty acid mist and SO_2 emissions test were conducted on two of the five acid plants. Plant numbers 6 and 7 were tested with ten tests on each unit. Method 8 of 40 CFR 60 was used to perform the 20 tests. In addition, a continuous SO_2 monitor was placed into operation to record long-term emissions from the number 7 acid plant.

All of the sulfur-laden gases from 9 converters are ducted to 6 single-absorption acid plants. There are 9 copper converters at the plant. Their operations are phased to maintain a relatively constant SO_2 concentration to the acid plants. The acid plants are designed to process a gas stream with a sulfur dioxide concentration between 2 and 8%. The flow rate to the acid plant varied between 30,000 to 70,000 scfm depending upon the number of converters in operation.

Acid plants numbers 6 and 7 were chosen for the tests because they were the newest installations at the facility. Plant number 6

Table V-4

ASARCO Copper Smelter
Copper Converter Acid Plant
June 1972

Run Number	1	2	3	4	5	Arithmetic Average
Date	June 20	June 20	June 21	June 21	June 22	
Test time (min.)	145	144	144	145	144	144
Stack effluent:						
Flow rate, dscm/min (dscfm)	2192 (78,300)	2257 (80,600)	2072 (74,000)	2100 (75,000)	2136 (76,300)	(75,770)
Temperature, °C (°F)	47 (116.00)	37 (99.00)	43 (110.00)	34 (93.00)	40 (104.00)	40 (104)
Pressure, mm Hg (in. Hg)	699 (27.5)	708 (27.87)	708 (27.87)	694 (27.33)	694 (27.33)	701 (27.58)
Acid plant SO_2 emissions:						
PPM (by volume)	2238	3994	3313	2593	3086	3117
kg/dscm (lb/dscf)	29.1×10^{-3} (37.4×10^{-5})	51.9×10^{-3} (66.8×10^{-5})	43×10^{-3} (55.4×10^{-5})	22.9×10^{-3} (29.5×10^{-5})	40.1×10^{-3} (51.6×10^{-5})	37.4×10^{-3} (29.06×10^{-5})
kg/hr (lb/hr)	3850 (1750)	7106 (3230)	5411.5 (2459.7)	2920.5 (1327)	5197 (2362)	4896.6 (2225.7)

began operations in February 1967. It was designed by Parsons Co. The plant was in the second month of its catalyst cleaning cycle during the test program. The system has the capability of processing up to 100,000 scfm of gas at a concentration of 2 to 8%. Plant number 7 commenced operation in September 1970. It was designed by Monsanto Enviro-chem and was constructed by Leonard Construction Company. The system was designed to handle the fluctuations of flow rate and SO_2 concentration associated with converter operations. It can handle SO_2 concentrations ranging between 2 and 8%. The number 7 unit was in the last month of its catalyst cleaning cycle when the manual tests were performed.

Tables V-5 and V-6 summarize the manual emissions test results from the Kennecott acid plants numbers 6 and 7.

In addition to the manual emission tests performed at the Kennecott smelter, a continuous monitoring test program was conducted between September 15, 1972, and November 15, 1972, on the number 7 acid plant. The purpose of this program was to gather long-term emission data suitable for determining an averaging time which would effectively mask fluctuations in acid plant outlet concentrations, and for evaluating the long-term performance capabilities of single-absorption acid plants.

The emissions were recorded by a Dupont 460 Continuous SO_2 Analyzer from September 15 to November 15, 1972. Section 4-1 of this document discusses the results of that test.

Table V-5

Kennecott Copper Corporation
Copper Converter Acid Plant #6
June 1972

Run Number	1	2	3	4	5	6	7	8	9	10	Average
Date	June 13, 1972	June 14, 1972	June 14, 1972	June 14, 1972	June 15, 1972	June 15, 1972	June 15, 1972	June 16, 1972	June 16, 1972	June 16, 1972	
Test time (min.)	112	56	56	112	112	112	112	112	112	112	101
Stack effluent:											
Flow rate, dscm/min (dscfm)	1744 (62,800)	1494 (53,300)	1661 (59,300)	1606 (57,900)	1975 (71,100)	1914 (68,900)	1891 (68,100)	1894 (68,200)	1972 (71,000)	1850 (66,600)	1800 (64,804)
Temperature, °C (°F)	77 (169.0)	76 (167.0)	74 (155.0)	74 (164.0)	96 (203.0)	95 (196.0)	82 (181.0)	77 (169.0)	83 (182.0)	80 (175.0)	81 (178)
Pressure, mm Hg (in. Hg)	734 (28.90)	734 (28.90)	734 (28.90)	734 (28.90)	735 (28.92)	735 (28.92)	735 (28.92)	734 (28.90)	734 (28.90)	734 (28.90)	734 (28.91)
Concentration (SO_2)											
PPM (by volume)	126	388.5	752	1036	1744	938	1608	7940	1128.0	930.0	944.7
kg/dscm x 10^{-4} (lb/dscf x 10^{-6})	16.3 (21)	50.5 (65)	97.1 (125)	134.0 (173)	227.0 (292)	122.0 (157.0)	209.0 (269.0)	103.0 (133.0)	146.9 (189.0)	930.0 (155.0)	122.6 (158)
kg/hr (lb/hr)	174 (79.12)	457.4 (207.9)	986.7 (448.5)	1322.0 (601)	2740.5 (1245.7)	1445 (657)	2417.8 (1099)	1156.8 (544)	1771 (805)	1361.8 (619)	1383.3 (628.7)

Table V-6

Kennecott Copper Corporation
Copper Converter Acid Plant #7
June 1972

Run Number	1	2	3	4	5	6	7	8	9	10	Average
Date	June 13, 1972	June 14, 1972	June 14, 1972	June 14, 1972	June 15, 1972	June 15, 1972	June 15, 1972	June 16, 1972	June 16, 1972	June 16, 1972	
Test time (min.)	111	56	56	112	112	112	112	112	112	112	100.7
Stack effluent:											
Flow rate, dscm/min (dscfm)	1747.0 (62,900)	1675.0 (60,300)	1500.0 (54,000)	1643.0 (59,150)	1958.0 (70,500)	1783.0 (64,200)	1916.0 (69,000)	1875.0 (67,500)	1930.6 (69,500)	1905.6 (68,600)	1793 (64,560)
Temperature, °C (°F)	57 (135.0)	51 (124.0)	59 (138.0)	56 (134.0)	60 (139)	56 (133)	64 (146)	56 (134)	56 (134)	56 (134)	
Pressure, mm Hg (in. Hg)	734 (28.91)	734 (29.90)	734 (28.90)	734 (28.90)	735 (28.92)	735 (28.92)	735 (28.92)	734 (28.90)	734 (28.90)	734 (28.90)	734 (28.91)
Concentration (SO_2)											
PPM (by volume)	553	296	855	2277	1207	1131	2553	1104	1355	1433	1276
kg/dscm x 10^{-4} (lb/dscf x 10^{-6})	71.9 (92.5)	38.4 (49.47)	111.1 (143.0)	296.0 (381)	160.0 (202)	146.9 (189)	331.8 (427)	143.7 (185)	176.4 (227)	186.5 (240)	166 (213.6)
kg/hr (lb/hr)	768 (349)	393.8 (179.0)	1019.0 (463)	2974.8 (1352)	1879.8 (854)	1601.7 (728.0)	3889 (1767.8)	1648 (749)	2082.5 (946.6)	2173 (987.8)	1842.7 (837.6)

Appendix VI

Analysis of Dual-Absorption Acid Plant Continuous SO_2 Monitoring Data

Introduction

The dual-absorption acid plant for SO_2 control at the ASARCO copper smelter at El Paso, Texas, was the first system of its type in the domestic nonferrous smelting industry. The SO_2 emissions from this unit were measured by EPA beginning May 17, 1973, and continuing through December 14, 1973.

The objective of the test was to characterize the SO_2 emissions from a smelter using a control system of this type. The data were analyzed to determine the control system efficiency and any conditions which would cause high emissions. Finally, the emissions data were used to examine realistic and achievable sulfur dioxide emission limitations for nonferrous smelting operations which produce strong SO_2 streams.

The ASARCO smelter at El Paso, Texas, is a custom copper smelter which produces 236 metric tons per day (260 TPD) of blister copper. Approximately 365 metric tons per day (400 TPD) SO_2 are also produced during the smelting process. The smelter operates three converters, with two converters operating at essentially all times while the third converter is in the pouring portion of its smelting cycle. This type of cyclic operation typically permits a relatively constant, strong (3-7%) SO_2 stream to be ducted to the control system.

The converter gases are controlled by the dual-absorption acid plant which produces approximately 450 metric tons per day (500 TPD) of sulfuric acid. The acid plant is designed to process an average inlet concentration of 4% from an inlet concentration ranging between 2% to 10% SO_2 at an inlet flow rate of up to 100,000 cfm. The

autothermal operating limit of the acid plant lies between 3.5 and 4% SO_2. The system is provided with an automatic heater which permits efficient operation of the acid plant down to an inlet SO_2 concentration of approximately 2%. The catalyst renewal cycle of the acid plant is designed to be approximately once every 2 years.

The monitoring instrumentation included a Dupont 460 SO_2 analyzer for monitoring the outlet SO_2 concentration, a Beckman inlet SO_2 concentration analyzer, and a Westinghouse E2B 4-channel tape recorder which permitted simultaneous recording of time, inlet SO_2 concentration, outlet SO_2 concentration and inlet volumetric flow rate. The Beckman inlet SO_2 was an integral part of the ASARCO SO_2 control system which required modification to permit recording of its output signal by the EPA recorders.

The accuracy of the outlet SO_2 monitoring instrumentation was verified as outlined in the proposed EPA Method 12 of 40 CFR 60. A total of nine manual Method 8 SO_2 tests, defined in 40 CFR 60, were performed between July 9 and 12, 1973. Table VI-I shows the results of the manual SO_2 measurements as determined by Method 8 and the corresponding SO_2 readings as determined by the Dupont 460 SO_2 monitoring instrument.

The entire monitoring program covered a period of 5088 hours, or 212 days. During this time span, the acid plant was in operation for a total of 190 days or 90% of the monitoring period. During the same time span, the monitoring instrumentation was in operation

Table VI-1

Comparison of SO_2 Measurements Using EPA Method 8 and the Dupont 460 SO_2 Analyzer

Date & Time Started	Test Results (ppm SO_2) EPA Method 8	Dupont Analyzer
7-9-73 (1617)	12.5	19.9
7-10-73 (1011)	122.0	121.2
7-10-73 (1418)	21.0	22.1
7-10-73 (1602)	117.5	116.3
7-10-73 (1745)	53.0	48.5
7-11-73 (0816)	19.5	22.2
7-11-73 (1000)	49.5	51.4
7-12-73 (1627)	239.0	224.3
7-12-73 (1805)	22.5	23.1

for 90% of the monitoring period. Taking into account periods when both acid plant and monitoring instrumentation were inoperative, data were collected during 86% of the time of the monitoring program. The monitoring instrumentation recorded one reading for each parameter monitored every 3 minutes. At the end of each 15-minute interval, an average of the previous five readings was computed. The 15-minute averages were used as the base data points for all subsequent computations and analyses.

Validation of Data

To ensure that the recorded data were representative of "normal" operating conditions, data validation criteria were established. The acid plant operations log, the acid plant engineer's log, the catalyst temperature charts, and the converter in/out charts were reviewed to determine the operating state of the converter operations and the acid plant. Periods during which the acid plant was not operating and periods of excess emissions during startup were removed from the compiled data. For purposes of analysis of the compiled data, all other operating situations were considered normal.

During the course of the test program, the acid plant experienced a number of shutdown and startup situations. The periods of acid plant downtime lasted for as little as 30 minutes to as long as 5 days. It was observed from a general review of the data that the shorter durations of downtime produced shorter periods of high emissions after startup than the downtimes of longer duration. Therefore, each period

of downtime and startup was evaluated to derive a quantitative relationship between the duration of the downtime and the duration of high emissions after startup.

In developing an approximate relationship between the duration of abnormal emissions and the duration of downtime, a family of curves was prepared to show average emission vs time after startup based on the data monitored. There were 25 startups during the monitoring period. These were categorized into five groups depending upon downtime duration. The curves represent the following downtime periods: 1.99 hours or less, 2 to 5.99 hours, 6 to 9.99 hours, 10 to 13.99 hours, and greater than or equal to 14 hours. Each curve represents the following total number of downtimes: 7 downtimes of 1.99 hours or less, 3 downtimes of from 2 to 5.99 hours duration, 3 downtimes of from 6 to 9.99 hours duration, 4 downtimes of from 10 to 13.99 hours duration, and 7 downtimes of 14 hours or greater duration. Normal operation was considered attained when the average emissions decreased to 500 ppm. Figure VI-I shows the relationship between the downtime duration and the emission rate immediately after startup.

The analysis of the curves indicates that downtimes of up to 1.99 hours did not cause excess emissions. Downtimes of greater than 14.99 hours, however, typically created abnormal emissions for up to approximately 5 hours after startup. Other shutdown intervals resulted in normal operation being attained after a period of time ranging between the two previous extremes.

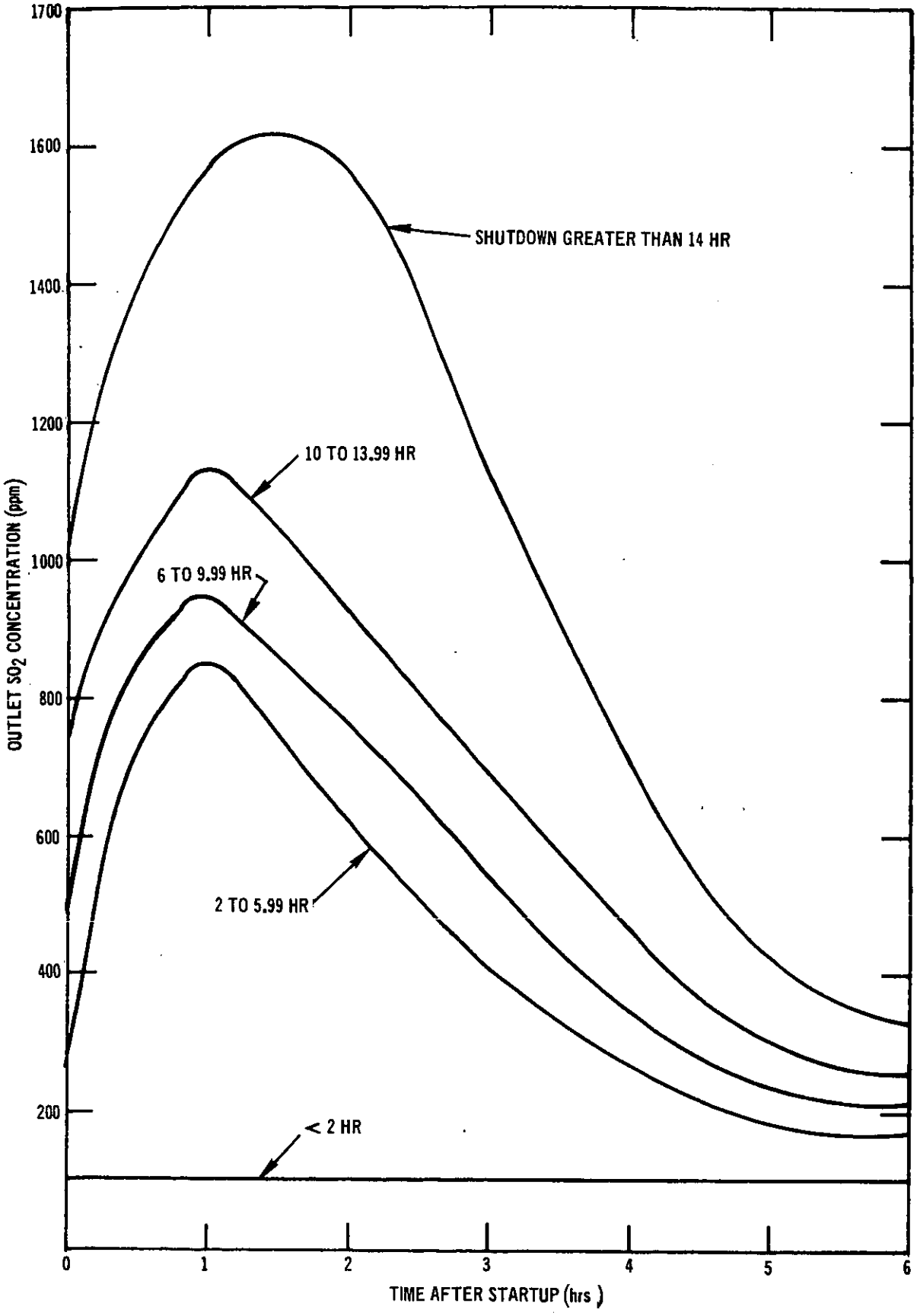

Figure VI-1. Average emissions after startup.

It is realized that the exact duration of excess emissions during startup will vary, because the time required to attain normal operation depends to a major degree upon the skill of the acid plant operator, his perception of the system's imbalance and his response with corrective measures. Also, the time required to attain normal operation is dependent upon the response time of the acid plant system to any corrective actions initiated by the operator. The curves of Figure VI-I indicate that there may be considerable elapsed time after startup before the acid plant regains equilibrium conditions. Based on these curves, data validation criteria were developed for startup periods. Data points during the initial portions of an acid plant startup were excluded from the analysis based on the following criteria, to the nearest hour:

(a) For shutdowns of less than 2 hours, the first valid datum point occurs immediately after startup.

(b) For shutdowns of 2 to 5.99 hours, the first valid datum point occurs 3 hours after startup.

(c) For shutdowns of 6 to 9.99 hours, the first valid datum point occurs 4 hours after startup.

(d) For shutdowns of 10 to 13.99 hours, the first valid datum point occurs 4 hours after startup.

(e) For shutdowns of greater than 14 hours, the first valid datum point occurs 5 hours after startup.

Discussion of the Data

With periods of acid plant downtime and the initial portion of acid plant startup eliminated from the recorded data, the remaining data constitute emissions from normal smelting and acid plant operations. This includes periods of abnormally low inlet concentration when all converters were out of the hoods for short periods. These situations are common occurrences in copper converter operations.

As previously discussed, the inlet SO_2 concentration to the acid plant was measured at 3-minute intervals. The readings were then averaged every 15 minutes to determine the 15-minute average base data points. The inlet gas stream averaged 3.80 percent SO_2 for the entire test period with a standard deviation of 1.64 percent SO_2. The highest recorded 15-minute average inlet for the total monitoring period was 9.19 percent SO_2.

An analysis of the distribution of the 15-minute inlet SO_2 readings indicated that the acid plant processed gases of greater than the minimum requirements for autothermal operation (3.5 percent) for only approximately 55 percent of the time. Figures VI-2 and VI-3 show the concentration distribution and the cumulative frequency distribution of the inlet SO_2 concentrations recorded during the monitoring period.

An important factor to note is the percentage of time that the acid plant operated at greater than 6 percent SO_2. The system was processing gases of greater than 6 percent SO_2 only 11 percent of the total operating time. This factor becomes important when considering the general relationship of inlet SO_2 concentrations to SO_2 emissions of this system as compared to other projected copper

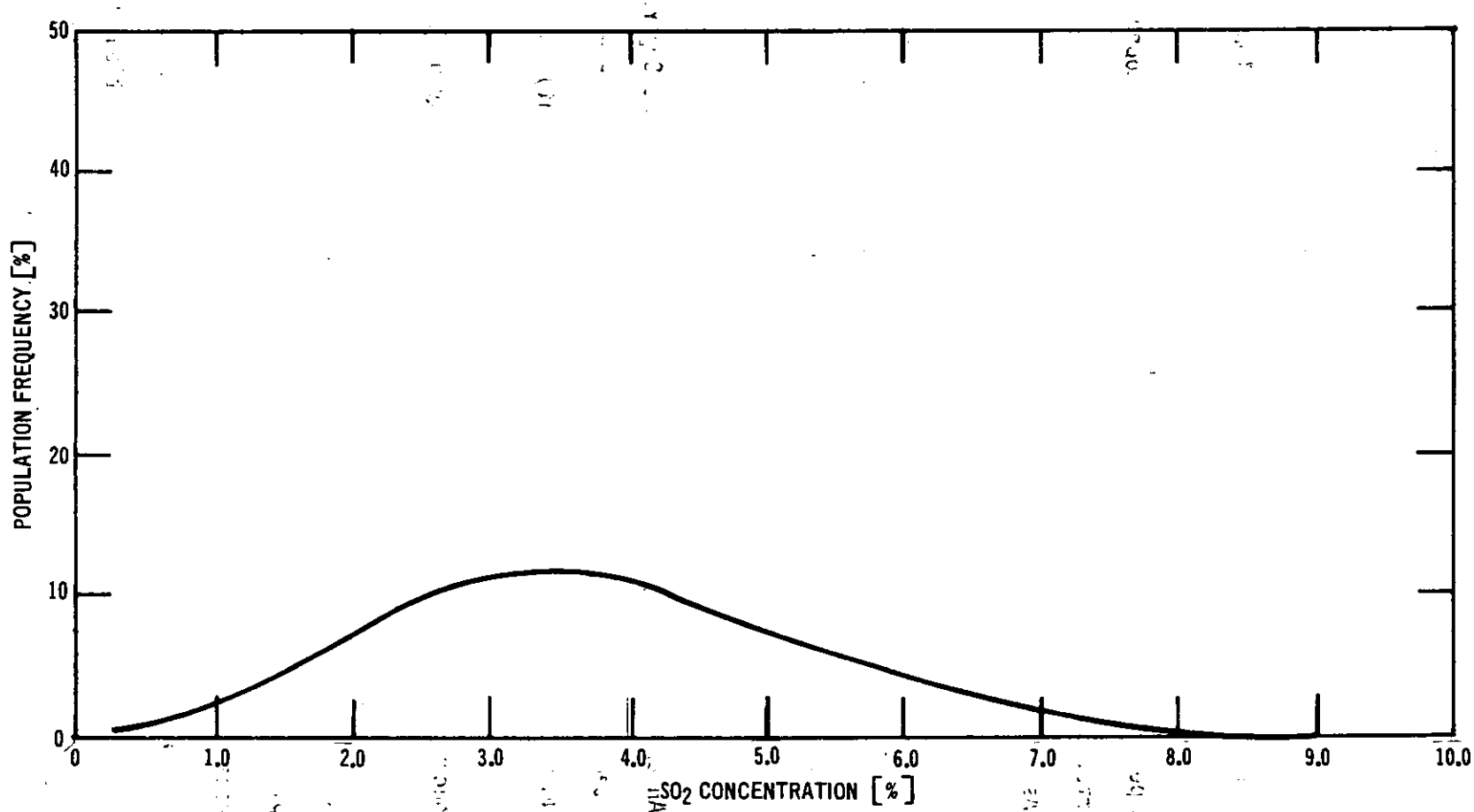

Figure VI-2. Inlet SO_2 concentration frequency distribution.

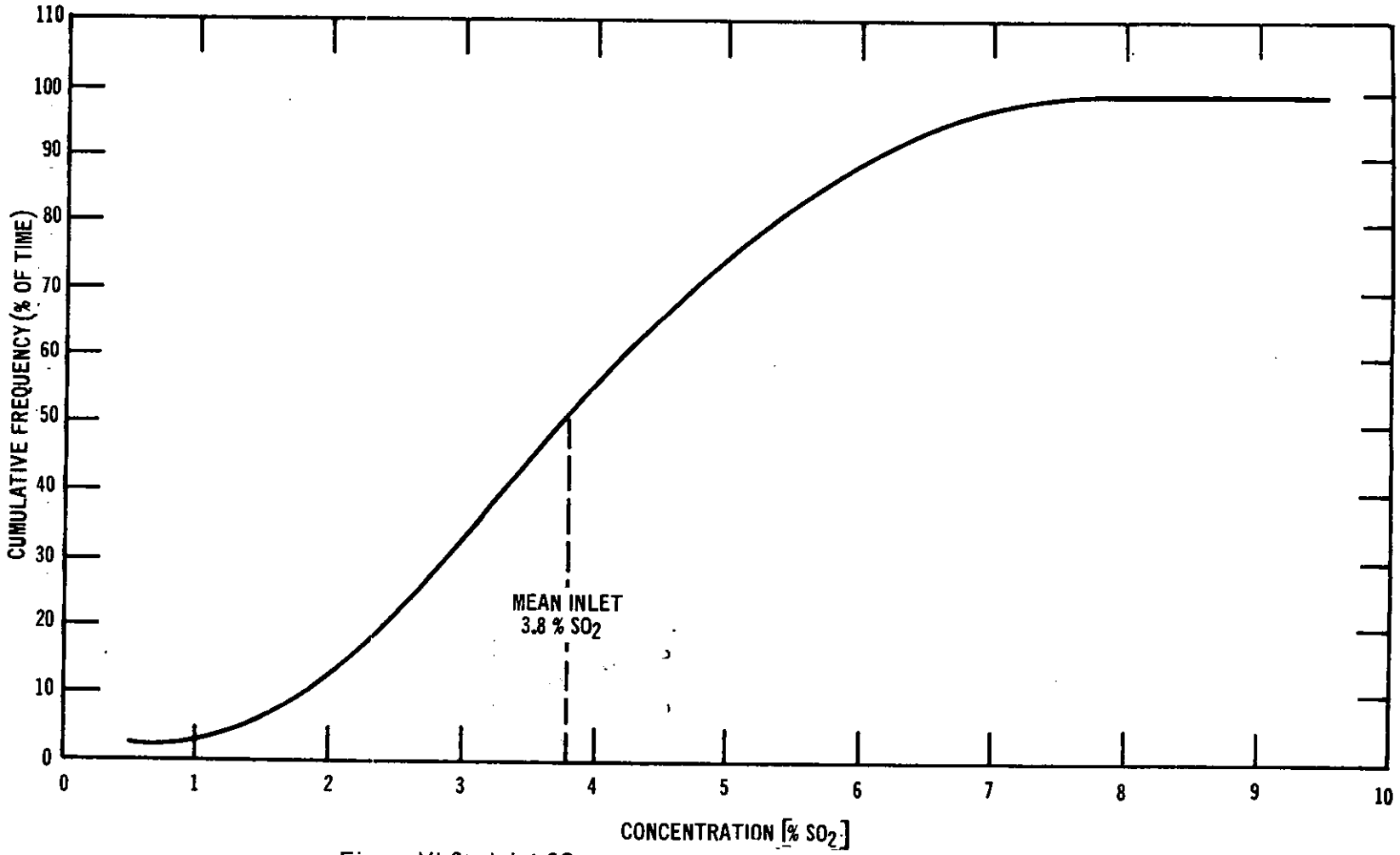

Figure VI-3. Inlet SO_2 concentration cumulative frequency distribution.

converter acid plants. Other nonferrous smelters typically produce strong gas streams of consistently higher concentrations, on the order of 6 to 9 percent SO_2.

Catalyst Deterioration

The efficient operation of any acid plant is governed to a major degree by the condition of the catalyst which aids the conversion reaction of SO_2 to SO_3. As the catalyst is used, its condition can deteriorate and thus decrease the control efficiency of the system. This naturally results in increased emissions from the acid plant. To ascertain any change in conversion efficiency attributable to catalyst use, the change in efficiency was determined for various time intervals over the total test period. The implied assumption in this procedure was that any decrease in control efficiency would be basically due to the decreased reactivity of the catalyst.

The acid plant conversion efficiency was calculated using the following definition:

$$\text{Efficiency (E)} = \frac{\text{Mass } SO_2 \text{ converted}}{\text{Mass } SO_2 \text{ available}}$$

Adopting the ideal gas law for SO_2, the previous definition can be represented by the equation:

$$E = \left(1 - \frac{C_{out}}{C_{in}}\right)\left(1 + C_{out} + C^2_{out} + \cdots + C^n_{out}\right)$$

C_{in} = SO_2 concentration entering the acid plant.

C_{out} = SO_2 concentration leaving the acid plant.

The acid plant commenced operation in December 1972. Between May 1973 and December 1973, the acid plant was monitored while operating for approximately 171 days, or approximately 86 percent of the time. At the end of the monitoring program, the acid plant had been in operation a total of 336 days.

The normal cleaning cycle for the acid plant catalyst, based on the manufacturer's design, is two years. Thus, the system was monitored during the second quarter of its normal catalyst cleaning cycle. Due to the failure of parts of the gas precleaning system to operate properly, however, the catalyst deterioration rate was accelerated and the acid plant catalyst was screened during March 1974. Based on this information, the catalyst renewal cycle therefore covered a period of 1.2 years, and the acid plant was considered to have been monitored during the second and third quarters of its catalyst cleaning cycle.

One least squares regression analysis of the change in efficiency with usage covers the total test period from May 17, 1973, through December 14, 1973. Similarly, second and third analyses of the change in efficiency with time were also made and included the last two months and the last month of the monitoring period, respectively. A review of the three results indicates that the acid plant's efficiency remained essentially constant at an average of greater than 99.70 percent during the total test program. The respective changes in efficiency within the observed periods indicated by the three analyses were 0.20×10^{-7}, 5.6×10^{-7}, and 8.7×10^{-7}

percent per day. The minimum efficiencies from these changes in efficiency were 99.750%, 99.643% and 99.688%, respectively. Thus, neither within a given interval nor between one reporting interval and another did the analysis show sufficient changes in efficiency to indicate a significant change in the condition of the catalyst.

Effect of Inlet SO_2 Concentration on Emissions

The most important aspect of the inlet SO_2 concentration is its effect on acid plant operating efficiency and the resulting outlet SO_2 concentration. To ascertain the effects of varying inlet SO_2 concentrations on the resulting outlet SO_2 concentrations, all of the simultaneous 15-minute inlet and outlet concentration data were used to develop a least squares straight line. The results of this analysis indicated there is a direct linear relationship between inlet and the resulting outlet. The correlation coefficient of the analysis was calculated to be 0.413 and determined to be significant enough to warrant a conclusion of linearity. Figure VI-4 shows the graph of the least squares line and its standard error.

The inlet SO_2 concentrations experienced during this test were somewhat lower than the concentrations of 5 to 6 percent which are achievable from typical copper converter operations. With an average of 3.8 percent SO_2 and a standard deviation of 1.64 percent SO_2, approximately 68 percent of the readings were between 2.2 and 5.4 percent SO_2, indicating that the inlet concentrations are biased low and thus result in lower outlet concentrations. The fact that the acid plant inlet concentration was typically low indicates that the typical

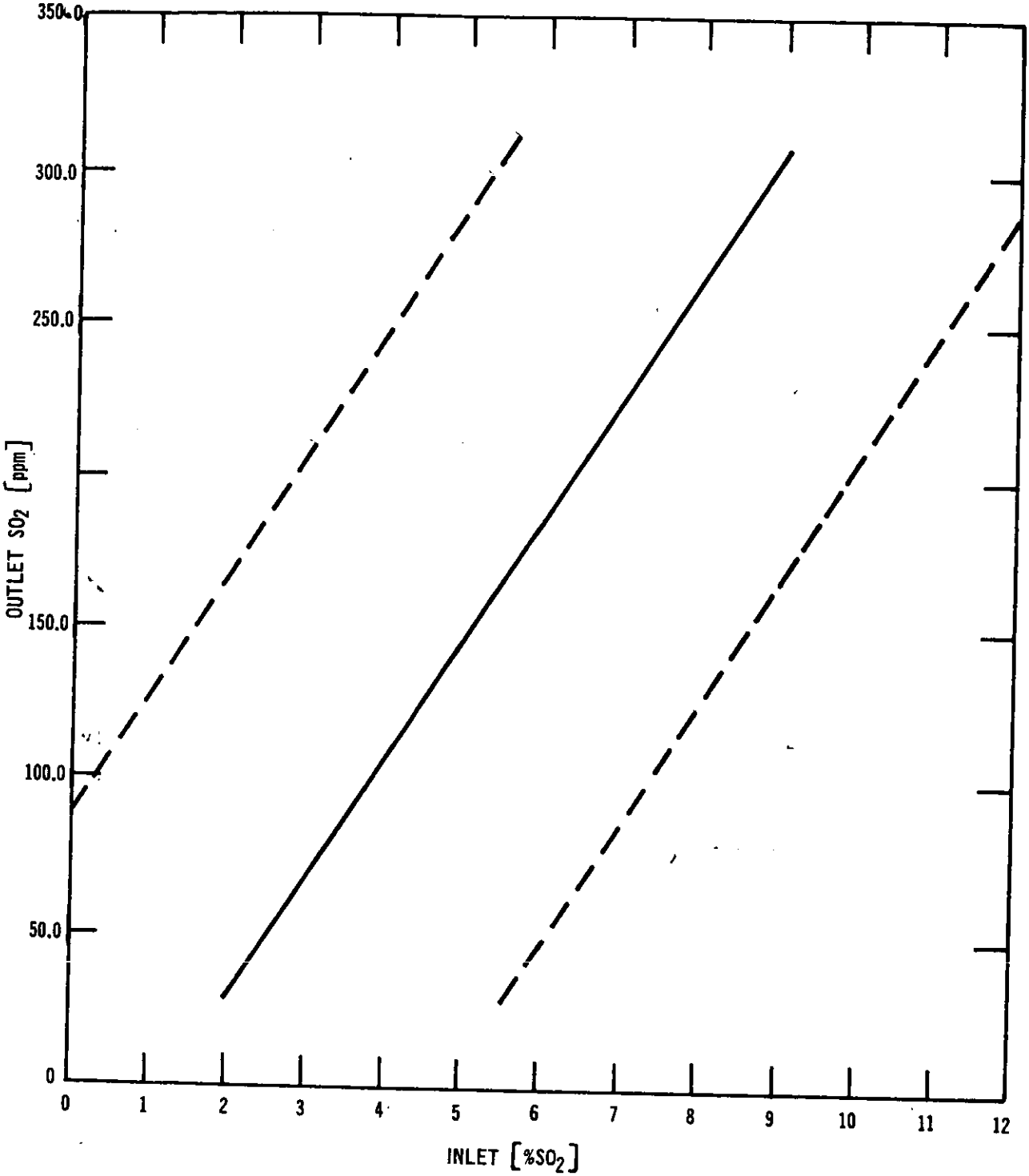

Figure VI-4. Outlet SO_2 concentration versus inlet SO_2 concentration.

outlet concentration was lower than that expected from other similar acid plants operating at a higher average inlet concentration. This factor must be taken into account when determining emissions limits for other smelting operations, based on data from this test.

An inlet concentration of 9 percent is approximately the maximum inlet SO_2 concentration that can be processed by most modern dual-stage acid plants. Figure VI-4 is significant, therefore, when predicting the expected emissions from a smelter generating an inlet gas stream within the observed range of this test (0.02 to 9.16% SO_2). It shows that the average outlet concentration increases approximately 50 ppm per 1 percent increase in inlet concentration above 3.8 percent. For instance, when the average inlet concentration to the acid plant was 9 percent SO_2, the average emission rate indicated from the test was approximately 3 times the emission rate obtained at 3.8 percent inlet SO_2. This increase is basically due to increased inlet concentration at a constant conversion efficiency.

Results of the Test Program

The results of the test program indicated that during normal operations the average emissions, based on 15-minute readings, ranged between 10 and 2920 ppm. Approximately 90 percent of these values, however, were below 250 ppm and well below the typical manufacturer's guaranteed emission rate of 500 ppm.

There were, however, periods of relatively high emissions, even when averaged over six-hour periods, which could not be attributed to malfunctions, startups or shutdowns from analysis of the data recorded during these periods. It was thought that these periods

might be caused by relatively high inlet concentrations, resulting in a corresponding increase in outlet concentrations. In order to examine this possibility, 6-hour averages of 400 ppm or greater were located in the data base, and the twenty-four 15-minute inlet concentration readings which made up the 6-hour averages were recorded. The concentration frequency distributions of these inlet readings were then compared with the inlet concentration frequency distribution for the entire monitoring period. In general, the individual distributions did not vary significantly enough from the composite for the entire monitoring period to indicate that the excursions occurred during periods of unusually high or during abnormal inlet concentration conditions. The catalyst converter temperatures and inlet gas flow rates were also reviewed, but no abnormalities were noted in these parameters.

Since the periods of relatively high emissions were not caused by abnormal inlet gas conditions or by abnormal operation of the acid plant system, the compiled data were averaged over various time intervals ranging from 1 to 10 hours in order to examine the effect of averaging time on damping of normal excursions. As a result, the effects of normal short-term excursions were spread over successively longer periods of time. Table VI-2 shows a matrix, to the nearest 0.05 percent, of the percentages of the total readings which exceeded given concentrations for various averaging intervals.

It can be seen from Table VI-2 that as the averaging time for a given concentration level increases, the percentage of excursions

Table VI-2. The Effect of Concentration Level and Averaging Time on the Percentage of Excursions at Given Concentrations (ppm)

Ave. Time	# Readings	150	200	250	300	350	400	450	500	550	600	650	700	750	Max. ppm
15 min	14612	20.00	15.00	10.00	7.50	5.00	4.00	3.00	2.30	1.60	1.35	1.15	1.05	1.05	2920
1 hr	3628	20.00	15.00	10.00	7.10	4.10	3.15	2.65	2.10	1.75	1.40	1.00	0.90	0.80	1982
2 hr	3702	20.00	15.00	10.00	5.00	3.00	2.50	2.00	1.75	1.50	1.25	1.00	0.90	0.70	1261
3 hr	3758	20.00	15.00	10.00	5.00	2.20	2.00	1.60	1.25	0.85	0.80	0.55	0.50	0.50	1238
4 hr	3803	20.00	8.15	6.10	3.00	2.20	1.40	1.05	0.80	0.75	0.50	0.45	0.30	0.25	935
5 hr	3841	20.00	10.00	5.00	2.75	1.75	1.25	1.00	0.75	0.55	0.40	0.30	0.25	0.15	935
6 hr	3876	20.00	10.00	5.00	2.45	1.75	1.20	0.90	0.45	0.35	0.30	0.15	0.05	0.05	752
7 hr	3907	20.00	10.00	5.00	2.15	1.40	1.00	0.55	0.30	0.20	0.10	0.05	0.00	0.00	662
8 hr	3935	15.00	10.00	5.00	2.15	1.40	0.80	0.50	0.25	0.10	0.05	0.00	0.00	0.00	662
10 hr	3988	15.00	10.00	5.00	2.05	1.20	0.55	0.25	0.10	0.05	0.00	0.00	0.00	0.00	576

above that concentration level tends to converge to zero. For example, Table VI-2 indicates that from 20 to 15 percent of the recorded values exceeded 150 ppm, depending on the averaging intervals between 1 and 10 hours.

Similarly, in Table VI-2 an increase in the concentration level for a given averaging time will also cause the matrix to converge rapidly to a small value. For example, observing the 6-hour averaging interval, there is a 20% excursion rate at the 150 ppm level. Increasing the concentration level to 300 ppm decreases the excursion rate to 2.45 percent; increasing the concentration level to 750 ppm decreases the excursion rate to 0.05 percent.

Based on the results of Table VI-2,as either the averaging time increases, the concentration level increases, or both increase, the percentage of excursions tends to converge toward a small value in the matrix.

Conclusions

As previously indicated, the typical manufacturer's guarantee for a dual-stage acid plant is 500 ppm, based on a 5 to 6 percent average inlet SO_2 concentration. The results of the test, however, indicated that the test was carried out at a 3.8 percent average inlet concentration, somewhat lower than the average inlet concentration from typical copper converting operations. The test results also indicate that there is a direct linear relationship between inlet SO_2 concentrations and outlet SO_2 concentrations; the inlet concentrations increase proportionally with outlet concentrations. Therefore,

since the inlet concentration was somewhat lower than normal, the resulting outlet concentration was considered lower than that from typical copper smelters.

Since the manufacturer's guarantee of 500 ppm is based on a 5 to 6 percent inlet SO_2 concentration into a typical smelter converter acid plant, the equivalent SO_2 concentration for the ASARCO acid plant during the test period was 400 ppm. This is due to the typically lower inlet concentrations.

As discussed in Appendix V, an appropriate averaging time for masking outlet concentration fluctuations from single-stage acid plants was determined to be 6 hours. The test of the ASARCO plant indicates that a 6-hour averaging time is also sufficient to mask fluctuations from a dual-absorption acid plant. The results show that an emission rate of 400 ppm for a 6-hour averaging time would result in 1.20 percent excursions.

Though the results of this test program indicate that a reasonable emissions limit equivalent to the vendor's guarantee (400 ppm) would result in only 1.20 percent violation rate, the effects of higher inlet SO_2 concentrations at other smelting operations and acid plant catalyst deterioration must be taken into account. To account for situations of increased emissions due to higher inlet concentrations up to 9 percent, the results of Table VI-2 require prorating upward a maximum of 200 ppm.

The results of this test were not conclusive as to the characteristics of increased emissions due to catalyst deterioration since no deterioration was observed during this test. Discussions with the designers of the

ASARCO acid plant indicated that up to a 10 percent increase in emissions was expected before renewal of the catalyst. This factor, therefore, has to be taken into account when predicting the expected emissions from a system of this type. Based on the previous factors, the results of Table VI-2 were prorated upward to take higher inlet concentration and deterioration into account.

Table VI-3 shows an acid plant operating at an inlet of as high as 9 percent and taking catalyst deterioration into account. From Table VI-3 it can be seen that an acid plant processing the maximum expected inlet concentration could be expected to maintain an emission rate of 650 ppm with only a 1.20 percent excursion rate.

In general, however, a new source performance standard set at the 650 ppm level and a 6-hour averaging time would result in a probable excursion rate of less than 1.20 percent. The general provisions of new source performance standards (39 FR 9308) specify that each performance test for the purpose of compliance shall consist of the arithmetic mean of the results from three separate runs. To determine the number of times that the ASARCO acid plant exceeded the 400 ppm level (equivalent to 650 ppm in Table VI-3), the recorded data from the test program were reviewed. Each 6-hour average of 400 ppm or greater was considered an excursion. Readings for 24 hours both before and after the violation were reviewed to determine whether the average of any two readings together with the excursion would exceed 400 ppm. The three 6-hour averaging periods were chosen so that none of the periods overlapped. The results

Table VI-3

Prorated Excursion Percentage
(Averaging time = 6 hrs; Number of readings = 3876)

Outlet SO_2 (ppm)	150	200	250	300	350	400	450	500	550	600	650	700	750	Expected Maximum ppm
Percentage of averages exceeding outlet SO_2	-	-	-	-	-	20.00	10.00	5.00	2.45	1.75	1.20	0.90	0.45	977

indicate that, of 48 recorded readings greater than 400 ppm during the entire monitoring period, only six result in averages of three runs greater than 400 ppm. From this evaluation, the probable percentage of 6-hour averages in excess of 650 ppm, based on a 9% SO_2 inlet stream, would be approximately 0.15 percent.

Appendix VII

Results of Particulate Tests Performed at Primary and Secondary Nonferrous Smelting Industries

Particulate Emission Test Results

Introduction

This section presents the data used to develop the proposed particulate standards for primary lead and zinc smelters. The affected facilities are zinc sintering machines, lead blast furnaces, lead dross reverberatory furnaces and lead sintering machine discharge ends.

Particulate emissions from one primary lead smelter were measured. Due to the limited number of suitable testing sites in the primary industries, other data were considered from the secondary lead smelting and refining industry, and the secondary brass and bronze ingot production industry. In these instances, it was concluded that the emission control devices tested and the characteristics of the particulates and effluent gases were similar to those of the primary industries.

Particulate matter emissions were determined according to EPA Method 5 of 40 CFR 60, December 23, 1971 (36 FR 24888). The data summarized correspond to the front half catch (probe and filter catch) of the emissions testing train.

Discussion

One primary lead smelter was tested; the control device was a baghouse. The remaining data are from previous EPA test programs in the secondary nonferrous smelting industry. Three secondary lead smelters were tested, all of which use baghouses to control emissions.

One of these facilities controls blast furnace emissions; two control reverberatory furnace emissions. Two brass and bronze smelters were tested, both of which use baghouses to control emissions. Both plants use reverberatory furnaces to melt scrap materials. Table VII-1 summarizes the results of these tests.

ASARCO Primary Lead Smelter, Glover, Missouri

The blast furnace and dross reverberatory furnace baghouse at the ASARCO primary lead smelter in Glover, Missouri, was tested on July 19-20 and 23, 1973. The smelter has a design capacity of 81,800 metric tons (90,000 tons) of lead per year and started production in 1968.

The blast furnace is an Australian step jacket design with a nominal capacity of 273 metric tons (300 tons) of lead bullion per day. The furnace is 7.6 meters (8.3 yards) long, 1.5 meters (1.64 yards) wide at the lower tuyeres, and 3.0 meters (3.28 yards) wide at the upper tuyeres. A blower provides up to 510 cubic meters per minute (18,000 ft^3/min) of air at 0.26 kg/cm^2 (0.76 lb/in^2) pressure to the furnace. The top of the furnace, where charging takes place and effluent gases are ducted to the control system, is of typical thimble-top design.

Charge materials for the furnace consist of coarse sinter, iron, coke, and caustic skims. Charging usually occurs 17-18 times per shift.

Effluent gases from the blast furnace, swivel vibrator (transfer of sinter to storage bins), Ross classifying rolls, dross kettles,

Table VII-1

Summary of Particulate Emissions - Metric Units (English Units)

Plant	Location	Particulate Emissions - Probe and Filter Catch mg/dscm (gr/dscf)				
		1	2	3	Avg.	
ASARCO - Primary Lead Smelter	Glover, Missouri	38.9 (0.017)	18.4 (0.008)	40.4 (0.018)	32.1 (0.014)	
SELCO, Inc. Secondary Lead	Columbus, Georgia	7.01 (0.003)	17.2 (0.008)	3.90 (0.002)	4.34 (0.002)	8.11 (0.004)
ASARCO - Secondary Brass and Bronze	San Francisco, California	13.7 (0.006)	18.3 (0.008)	22.9 (0.010)	18.3 (0.008)	
Quemetco, Inc. Secondary Lead	Industry, California	9.84 (0.004)	6.41 (0.003)	8.01 (0.004)	8.06 (0.004)	
N.L. Industries Secondary Lead	McCook, Illinois	5.49 (0.002)	7.55 (0.003)	9.61 (0.004)	7.44 (0.003)	
R.L. Lavin & Sons Brass and Bronze	Chicago, Illinois	13.7 (0.006)	11.4 (0.005)	16.0 (0.007)	9.15 (0.004)	13.7 (0.006)

Roy tapper, slag granulator, lead tap, slag taps and feed hopper drop points are exhausted to the blast furnace baghouse control system. The baghouse control system consists of a humidifying chamber, fresh air inlet, line addition system, and a baghouse.

The ASARCO-designed baghouse is enclosed in a concrete structure containing 6 compartments and is of the pressure type. Each compartment contains 204 wool bags. The inlet flow rate to the baghouse is 3710 m^3/min (131,000 acfm) at 58.3°C (137°F). Lime is added between the water spray chamber and the baghouse to aid in collection efficiency and to retard ignition of the collected dust.

The filter bags are cleaned by mechanical vibration. The compartment dampers remain closed for approximately 20 seconds after cleaning to allow particulates to settle. Compartments are cleaned on a rotation basis when the pressure drop across the baghouse exceeds 3 inches of water. When cleaning one compartment fails to sufficiently lower the pressure drop (generally to below 2 inches of water), the next compartment in sequence is cleaned. During the testing program, it was observed that two compartments were generally cleaned in sequence during one cleaning cycle.

The smelter was operated at capacity during testing. Production rates ranged from 12.5 to 12.6 metric tons (13.8-13.9 tons) of lead bullion per hour during the tests.

Particulate sampling was conducted simultaneously on the three stacks from the baghouse. Table VII-2 summarizes the results of these

Table VII-2

ASARCO Primary Lead Smelter - Blast Furnace and Dross Reverberatory Furnace Baghouse
Glover, Missouri
Summary of Results - Metric Units (English Units)

Run	1	2	3	Average
Date	7-19-73	7-20-73	7-23-73	
Test time, min.	128	128	128	
Lead production rate, metric tons/hr (tons/hr)	12.6 (13.9)	12.5 (13.8)	12.5 (13.8)	12.5 (13.8)
Stack effluent:				
Total flow rate, dscm/min. (dscfm)	3970 (139,000)	4480 (154,000)	4240 (146,000)	4230 (146,000)
Temperature, °C (°F)	56.2 (159)	63.7 (172)	64.2 (173)	61.4 (168)
Particulate emissions:				
Probe and filter catch				
mg/dscm (gr/dscf)	38.9 (0.0170)	18.4 (0.00807)	40.4 (0.0177)	32.1 (0.0141)
mg/m^3 (gr/acf)	31.8 (0.0139)	15.3 (0.00671)	33.3 (0.0146)	26.5 (0.0116)
kg/hr (lb/hr)	9.17 (20.2)	4.86 (10.7)	10.1 (22.3)	8.04 (17.7)
kg/metric ton of product (lb/ton of product)	0.73 (1.60)	0.39 (0.86)	0.81 (1.78)	0.64 (1.42)

tests. The data presented are averages of the simultaneous tests performed on each stack.

SELCO Secondary Lead Smelter, Columbus, Georgia

The SELCO secondary lead smelter at Columbus, Georgia, was tested on August 6-8, 1973. The plant processes approximately 910 metric tons (1000 tons) of lead per month. About 70 percent of total production is hard lead, an alloy containing 95-98% lead. The remaining 30 percent of production is essentially pure or soft lead.

Two 1.28-meter (42-inch) inside diameter blast furnaces operate 24 hours per day, 5 days per week, 50 weeks per year. Tuyere air, enriched to approximately 23 percent oxygen, is fed at a rate of approximately 19.8 dscm/min (700 scfm) to each furnace. Charge materials to the furnaces include lead scrap, coke, slag, and other fluxing agents. Lead is continuously tapped from the bottom of the furnaces. Normal production from each furnace averages 1.2 metric tons (1.1 tons) per hour. During the testing periods, production averaged between 0.90 metric tons/hr (0.99 tons/hr) to 1.1 metric tons/hr (1.21 tons/hr).

Combustion gases are exhausted through a stack at the top of each furnace. The gas stream from each furnace is directed to a separate afterburner, cooling system, and baghouse. The gases are cooled with a water spray and dilution air.

One of the two baghouses operated by the smelter was tested. The tested baghouse has 5 compartments, each containing 238 acrylic bags that are replaced on a 9-month schedule. The design capacity of the baghouse is 396 dscm/min (14,000 scfm). The filter bags are cleaned

by mechanical vibrators activated once per hour for a total cleaning time of 6.5 to 8 minutes per compartment. Bag-shaking takes 60-90 seconds per compartment. The gas stream is exhausted to the atmosphere through a 36.5-meter (100-foot) stack.

Four runs were conducted during the testing period. Table VII-3 summarizes the results of these tests.

ASARCO Secondary Brass and Bronze Smelter, San Francisco, California

The ASARCO secondary brass and bronze plant at San Francisco, California, was source-tested on November 30 to December 3, 1971. The plant produces brass and bronze ingots by melting selected scrap and virgin materials in furnaces, refining the molten mixture, and casting the refined alloy into ingots.

The plant operates two oil-fired 18.2-metric-ton (20-ton) rotating reverberatory furnaces designed by ASARCO. The charge to the furnace includes recycled wire, discarded radiators, various other forms of scrap, and fluxes. The effluent from the two furnaces is discharged into a baghouse designed by ASARCO. The baghouse is a closed-pressure type which is cleaned by mechanical shaking. The baghouse has seven compartments, each containing 33 bags. Exhaust gases are forced through the baghouse by a 935 m^3/min (33,000 cfm) fan. A manifold duct and breaching system direct the filtered gas to a 91.4-meter (300-foot) high stack which vents to the atmosphere.

Testing times were longer than two hours due to the large number of traverse points required by the flow pattern in the breaching system. Table VII-4 summarizes the test results.

Table VII-3

SELCO, Inc., Secondary Lead Smelter Blast Furnace Baghouse
Columbus, Georgia
Summary of Results - Metric Units (English Units)

Run	1	2	3	4	Average
Date	8-6-73	8-7-73	8-8-73	8-8-73	
Test time, min.	120	120	180	120	135
Lead production rate, metric tons/hr (tons/hr)	0.90 (0.99)	0.93 (1.02)	1.1 (1.21)	1.1 (1.21)	1.08 (1.11)
Stack effluent:					
Flow rate, dscm/min (dscfm)	391 (10,500)	255 (9010)	256 (9050)	236 (8330)	285 (9230)
Temperature, °C (°F)	83.4 (182)	93.9 (201)	98.0 (208)	96.0 (205)	92.8 (199)
Particulate emissions:					
Probe and filter catch:					
mg/dscm (gr/dscf)	7.01 (0.003)	17.2 (0.008)	3.90 (0.002)	4.34 (0.002)	8.11 (0.004)
mg/m^3 (gr/acf)	5.33 (0.002)	12.8 (0.006)	2.87 (0.001)	3.20 (0.001)	6.04 (0.003)
kg/hr (lb/hr)	0.125 (0.276)	0.263 (0.580)	0.06 (0.132)	0.061 (0.135)	0.127 (0.281)
kg/metric ton of product (lb/ton of product)	0.139 (0.279)	0.283 (0.569)	0.055 (0.109)	0.055 (0.112)	0.118 (0.253)

Table VII-4

ASARCO Secondary Brass and Bronze Reverberatory Furnace
San Francisco, California
Summary of Results - Metric Units (English Units)

Run	1	2	3	Average
Date	11-30-71	12-1-71	12-3-71	
Test time, min.	266	447	256	323
Heat time, min.	534	828	540	634
Ingots produced/heat, metric tons (tons)	16.4 (18.0)	16.5 (18.2)	18.3 (20.1)	17.1 (18.8)
Stack effluent:				
Flow rate, dscm/min (dscfm)	809 (28,600)	1040 (36,900)	858 (33,900)	937 (33,100)
Temperature, °C (°F)	62.2 (144)	57.2 (135)	55.6 (132)	58.3 (137)
Particulate emissions:				
Probe and filter catch				
mg/dscm (gr/dscf)	13.7 (0.006)	18.3 (0.008)	22.9 (0.010)	18.3 (0.008)
mg/m^3 (gr/acf)	11.4 (0.005)	16.0 (0.007)	20.6 (0.009)	16.0 (0.007)
kg/hr (lb/hr)	0.6490 (1.43)	1.17 (2.58)	1.33 (2.93)	1.05 (2.31)
kg/metric ton of product (lb/ton of product)	0.354 (0.71)	0.998 (2.00)	0.654 (1.31)	0.664 (1.33)

Quemetco, Incorporated, Secondary Lead Smelter, Industry, California

The Quemetco secondary lead smelter at Industry, California, was source-tested on January 26 and 27, 1972. A reverberatory furnace is used to melt lead scrap from manufacturers, scrap batteries, and various lead oxide drosses and dusts.

The reverberatory furnace is fired with natural gas at a rate of 7.5 m^3/min (265 cfm). The hearth is about 17.6 meters (25 feet) long and 2.4 meters (8 feet) wide, with the roof at about 0.9 meter (3 feet) above the melt. The furnace is batch-charged each 8-hr shift in 454 kg (1000 pound) increments. The gas to the furnace is turned off 30 minutes per shift to allow for dust removal from the ductwork, and the dust is immediately charged back to the furnace. Air is drawn into the furnace through the two sight and stirring ports on the feed end of the furnace, and through the feed port and slag port. Excess air is necessary to burn the volatiles in the battery cases.

Exhaust gas from the reverberatory furnace passes through a water spray chamber and cooling tower, and then to a baghouse. The baghouse contains seven sections with a total of 1100 bags, and is insulated to prevent water condensation. The flow rate to the baghouse is 425 m^3/min (15,000 cfm). The bags are cleaned by mechanical shaking, and the cleaning cycle time is 50 minutes.

Three particulate tests were conducted. Each sampling period encompasses periods of loading, meltdown, slag tapping, and lead tapping. Process operation during testing was typical of normal operation. Table VII-5 summarizes the test results.

Table VII-5

Quemetco, Inc., Secondary Lead Smelter Reverberatory Furnace Baghouse, Industry, Ca.
Summary of Results - Metric Units (English Units)

Run	1	2	3	Average
Date	1-26-72	1-26-72	1-27-72	
Test time, min.	120	120	120	120
Lead production rate, metric tons/hr (tons/hr)	1.9 (2.1)	1.9 (2.1)	1.9 (2.1)	1.9 (2.1)
Stack effluent:				
Flow rate, dscm/min (dscfm)	414 (14,600)	430 (15,200)	402 (14,200)	415 (14,700)
Temperature, °C (°F)	74.4 (166)	73.3 (164)	79.4 (175)	75.7 (168)
Particulate emissions:				
Probe and filter catch				
mg/dscm (gr/dscf)	9.84 (0.004)	6.41 (0.003)	8.01 (0.004)	8.06 (0.004)
mg/m^3 (gr/acf)	8.00 (0.0035)	5.26 (0.0023)	6.41 (0.0028)	-
kg/hr (lb/hr)	0.244 (0.539)	0.168 (0.370)	0.195 (0.430)	0.202 (0.446)
kg/metric ton of product (lb/ton of product)	0.128 (0.2565)	0.0880 (0.176)	0.102 (0.205)	0.106 (0.213)

N.L. Industries Secondary Lead Smelter, McCook, Illinois

The N.L. Industries secondary lead smelter in McCook, Illinois, was source-tested on February 9 and 10, 1972. Lead scrap is received as discarded batteries with the cases removed. The plant processes the battery plates into soft lead ingots.

The scrap lead is melted in a natural-gas-fired reverberatory furnace which is charged at regular intervals. The charge to the furnace includes lead oxide dust in addition to the lead batter plates. The hearth is about 7.6 meters (25 feet) long and 2.4 meters (8 feet) wide with the roof about 0.9 meters (3 feet) above the melt. The natural gas burners operate at full capacity except for brief morning periods during which the ductwork is cleaned. The gas firing rate is 13.6 m^3/min (480 cfm). The furnace is operated under a slight draft to prevent fugitive dust emissions. The charge increments are approximately 600-700 pounds. The feed is loaded into a hopper over the feed ram with a front loader; the ram operates continuously. The feed rate is controlled by the buildup of unmelted feed in the front of the furnace.

The exhaust gases from the reverberatory furnace pass through a brick flue, a cooling tower, three water-cooled cyclones, and then to a baghouse. The baghouse has four sections of 120 bags per section. Design air flow rate is 850 m^3/min (30,000 cfm). Bag shaking time is 8 minutes per half hour, with no shaking during the last 22 minutes of a half-hour cycle. Each section is cleaned for 2 minutes. The design collection efficiency is 99.9%.

Three runs were conducted during the testing period, and the process was operating normally during testing. Table VII-6 summarizes the test results.

R. L. Lavin and Sons Secondary Brass and Bronze Smelter, Chicago, Illinois

The R. L. Lavin and Sons secondary brass and bronze smelter at Chicago, Illinois, was source-tested on January 1-5, 1972. The facility processes brass scrap in a reverberatory furnace to produce ingots.

The reverberatory furnace is stationary and fired by gas. The furnace capacity is approximately 91 metric tons (100 tons) for brass. Air lancing is used to remove the iron from the melt. Exhaust gases pass from the furnace directly through a 27-37 meters (30-40 yards) refractory flue which serves as an afterburner. From that section of the flue, the gases pass through approximately 9.1 meters (30 feet) of water jacketed ductwork, and through a series of U-tube heat exchange elements upstream from a baghouse. The U-tubes are approximately 9.1 meters (30 feet) high and are used to achieve the desired baghouse inlet temperature [71°C (160°F)-107°C(225°F)]. The tubes permit temperature control without the use of water sprays.

The baghouse has 36 compartments with 25 bags per compartment. Two suction fans draw approximately 1250 m^3/min (44,000 cfm) of gas through the baghouse. The baghouse uses electrically timed mechanical shakers for cleaning. The 36 compartments are divided into 3 separate systems for cleaning. The total cleaning time per system is 30 minutes. Each compartment shakes for 60 seconds, and the lapsed time between shaking of successive compartments within a system is 90 seconds.

Table VII-6

N.L. Industries Secondary Lead Smelter Reverberatory Furnace Baghouse
McCook, Illinois
Summary of Results - Metric Units (English Units)

Run	1	2	3	Average
Date	2-9-72	2-9-72	2-10-72	
Test time, min.	150	150	150	150
Lead production, metric tons/hr (tons/hr)	1.9 (2.1)	6.4 (7.1)	1.9 (2.1)	3.4 (3.8)
Stack effluent:				
Flow rate, dscm/min (dscfm)	664.5 (23,480)	639.6 (22,600)	564.3 (19,940)	622.8 (22,010)
Temperature, °C (°F)	51.1 (124)	55.6 (132)	47.2 (117)	51.3 (124)
Particulate emissions:				
Probe and filter catch				
mg/dscm (gr/dscf)	5.49 (0.002)	7.55 (0.003)	9.61 (0.004)	7.44 (0.003)
mg/m^3 (gr/acf)	4.81 (0.0021)	6.18 (0.0027)	8.24 (0.0036)	-
kg/hr (lb/hr)	0.222 (0.489)	0.288 (0.635)	0.32 (0.721)	0.279 (0.615)
kg/metric ton of product (lb/ton of product)	0.102 (0.204)	0.132 (0.265)	0.150 (0.300)	0.128 (0.256)

The charging and refining phases of the smelting process were tested. Four runs were conducted during the testing period. Table VII-7 summarizes the test results.

Table VII-7

R.L. Lavin & Sons Brass and Bronze Reverberatory Furnace Baghouse
Chicago, Illinois
Summary of Results - Metric Units (English Units)

Run	1	2	3	4	Average
Date	11-1-71	11-2/3-71	11-3/4-71	11-4/5-71	
Test time, min.	120	700	747	780	656
Heat time, min.	1140	1183	1326	1372	1255
Ingots produced/heat, metric tons (tons)	44.6 (49.1)	54.4 (59.9)	49.0 (56.4)	49.0 (53.9)	49.8 (54.8)
Stack effluent:					
Flow rate, dscm/min (dscfm)	779 (27,500)	853 (30,100)	719 (25,400)	767 (27,100)	779 (27,500)
Temperature, °C (°F)	47.8 (118)	41.7 (107)	41.1 (106)	45 (113)	43.9 (111)
Particulate emissions:					
Probe and filter catch					
mg/dscm (gr/dscf)	13.7 (0.006)	11.4 (0.005)	16.0 (0.007)	9.15 (0.004)	13.7 (0.006)
mg/m^3 (gr/acf)	11.4 (0.005)	11.4 (0.005)	13.7 (0.006)	9.15 (0.004)	11.4 (0.005)
kg/hr (lb/hr)	0.703 (1.55)	0.567 (1.25)	0.626 (1.46)	0.44 (0.99)	0.595 (1.31)
kg/metric ton of product (lb/ton of product)	0.299 (0.60)	0.205 (0.41)	0.215 (0.43)	0.210 (0.42)	0.232 (0.46)

Appendix IX

Representative Model Copper Facilities Using Gas Blending

INTRODUCTION

This appendix presents data summaries of the opacity tests performed by EPA to develop the visible emissions standards for primary copper, lead, and zinc smelters. The data were gathered from a dual-stage acid plant and from a lead blast furnace baghouse at the ASARCO copper and lead smelter in El Paso, Texas.

Visible emission readings were taken every 15 seconds using Method 9 contained in Title 40 of the Code of Federal Regulations, Part 60 (40 CFR 60), Appendix A, first published in the December 23, 1971, Federal Register. The observers viewed the stacks from vantage points approximately perpendicular to the plume and avoided facing direct sunlight. They studied the point of greatest opacity in the plume and recorded data to the nearest 5% opacity. All observers were qualified according to the procedure described in Method 9.

DUAL-STAGE ACID PLANT OPACITY DATA

Visible emissions data were gathered from a double-absorption sulfuric acid plant to develop the standard limiting visible emissions discharged from smelters which utilize a sulfuric acid plant to control sulfur dioxide emissions. This section contains the data obtained at the American Smelting and Refining Company copper smelter in El Paso, Texas.

The dual-stage acid plant under consideration has been operating since December 1972 and controls the emissions from the smelter's copper converter operations. There are three Pierce-Smith converters, which are operated such that one or two converters are on-line at the same time, but never three.

Two qualified observers viewed the opacity of the emissions from the acid plant stack for approximately 10 hours, covering a period of two days. The stack was observed for approximately 4 hours the first day and 6 hours the second day, with breaks for the observers being staggered so that at least one observer was taking data at all times except for a one-hour simultaneous lunch break the second day. The sky was clear with little or no wind, which provided good conditions for observing opacity during both days.

The observers have been designated as readers R-1 and R-2. R-1 observed the acid plant stack over the two-day period for a total of 591 minutes. Except for a five-minute period when opacities reached as high as 30%, R-1 observed all opacities as zero percent.

R-2 observed the stack for a total of 658 minutes over the two-day period. Except for a six-minute period when opacities reached as high as 35% and corresponded with the five-minute period of high readings for R-1, R-2 observed all opacities as zero percent (see Table VIII-1).

Table VIII-1

Opacity Readings at ASARCO Sulfuric Acid Plant - El Paso, Texas

Date	Observer	% Opacity	Number of Occurrences	Total Time of Opacity (min.)	% of Total Readings*	Cumulative %
Oct. 29 & 30, 1973	R-1	30	7	1.75	0.30	0.30
		15	3	0.75	0.13	0.43
		10	8	2.00	0.34	0.77
		0	2346	586.50	99.23	100.00
Oct. 29 & 30, 1973	R-2	35	1	0.25	0.04	0.04
		30	4	1.00	0.15	0.19
		25	5	1.25	0.19	0.38
		20	9	2.25	0.34	0.72
		15	3	0.75	0.11	0.83
		10	1	0.25	0.04	0.87
		5	1	0.25	0.04	0.91
		0	2608	652	99.09	100.00

*Total Readings - R-1 = 591 min. x 4 = 2364 readings

R-2 = 658 min. x 4 = 2632 readings

LEAD BLAST FURNACE BAGHOUSE OPACITY DATA

Visible emissions data were gathered from the American Smelting and Refining Company's lead blast furnace baghouse in El Paso, Texas, to develop the standard limiting visible emissions discharged from fabric filters at primary lead and zinc smelters.

ASARCO has three blast furnaces at this plant, each with the capacity of producing 150 tons of lead per day. Two of the furnaces were on-line and operating at full capacity during all observations used in this appendix. The furnaces discharge through a spray chamber and the baghouse, then out six 108-ft stacks. Each of the stacks serves 2 of the 12 sections in the baghouse. A dross furnace also discharges through the spray chamber and into the baghouse. The combined flow rate from the blast furnaces and the dross furnace is approximately 160,000 scfm.

The baghouse is made of concrete and has 12 sections with 80 bags per section (total of 960 bags). Each bag is wool, is 30 feet long, and has a diameter of 18 inches. The cleaning cycle is activated when a pre-selected pressure is reached at the inlet to the baghouse. A damper closes at the inlet to the section to be cleaned, and the bags are then shaken. After a 5- to 40-second delay for dust settling after shaking has stopped, the section is reopened. If the pressure has not dropped sufficiently, the cycle is carried out on the next section. It is normal for two or three sections to be cleaned in succession before the pressure drops sufficiently. When the pressure increases to the pre-selected level, the first section

to be cleaned is the next section in succession after the last section cleaned in the previous cycle.

For 4-1/2 hours on November 1, 1973, two qualified observers, R-1 and R-2, determined the opacity of the gases discharged from the baghouse. The final 2-1/2 hours were not used in this appendix because the blast furnace was not operating at full capacity. February 5 and 6, 1974, two more qualified observers, R-3 and R-4, viewed the emissions from the baghouse for seven hours each day. The weather conditions were clear to partly cloudy with little or no wind during both observation periods.

The first two observers, R-1 and R-2, noted the majority of the opacity readings during the two-hour observation period to be zero percent. However, there were recurrent periods of visible emissions in which the opacity reached as high as 40%. During the first hour the opacity was greater than 20% for an average of 3.87 minutes, while during the second hour opacity was greater than 20% for an average of 1.87 minutes. During the entire observation period, between 87 and 92% of the readings were 20% or below (see Table VIII-2).

The second two observers, R-3 and R-4, recorded the majority of the opacity readings during their 14-hour observation period to be zero percent. However, as was the case of the first two observers, they encountered periodic recurrences of visible emissions, reaching as high as 35%. The opacities were greater than 20% for an average of 5 seconds per hour with a maximum of 30 seconds per hour. During this observation period, 99.99% of the readings were below 20% (see Table VIII-3).

Table VIII-2

Opacity Readings at ASARCO Lead Blast Furnace - El Paso, Texas

Date	Observer	% Opacity	Number of Occurrences	Total Time of Opacity (min.)	% of Total Readings*	Cumulative %
Nov. 1, 1973	R-1	40	2	0.50	0.42	0.42
		35	6	1.50	1.25	1.67
		30	4	1.00	0.83	2.50
		25	19	4.75	3.96	6.46
		20	29	7.25	6.04	12.50
		15	19	4.75	3.96	16.46
		10	10	2.50	2.08	18.54
		5	0	0.00	0.00	18.54
		0	391	97.75	81.46	100.00
Nov. 1, 1973	R-2	40	2	0.50	0.42	0.42
		35	1	0.25	0.21	0.63
		30	10	2.50	2.08	2.71
		25	1	0.25	0.21	2.92
		20	24	6.00	5.00	7.92
		15	1	0.25	0.21	8.13
		10	31	7.75	6.46	14.59
		5	0	0.00	0.00	14.59
		0	410	102.50	85.42	100.01

*Total Readings for 2 hours = 2 x 60 x 4 = 480.

Table VIII-3

Opacity Readings at ASARCO Lead Blast Furnace, El Paso, Texas

Date	Observer	% Opacity	Number of Occurrences	Total Time of Opacity (min.)	% of Total Readings*	Cumulative %
Feb. 5 & 6, 1974	R-3	35	1	0.25	0.03	0.03
		30	2	0.50	0.06	0.09
		20	9	2.25	0.27	0.36
		15	17	4.25	0.51	0.87
		10	37	9.25	1.1	1.97
		5	74	18.50	2.2	4.17
		0	3220	805	95.83	100.00
Feb. 5 & 6, 1974	R-4	15	5	1.25	0.15	0.15
		10	17	4.25	0.51	0.66
		5	148	37.00	4.4	5.06
		0	3190	797.50	94.94	100.00

*Total readings for 14 hours = 4 x 14 x 60 = 3360 readings or 840 minutes

(1 reading = 15 seconds)

The periods of higher opacity occurred at approximately the same time as the bag-shaking step of the cleaning cycle. Higher emissions can occur when the damper to the section most recently cleaned reopens, allowing a portion of the dust shaken from the bags to exit out the stack.

Appendix VIII

Visible Emission Observations

Figure IX-1. Gas Blending Model for Calcine Charge Smelting Facility

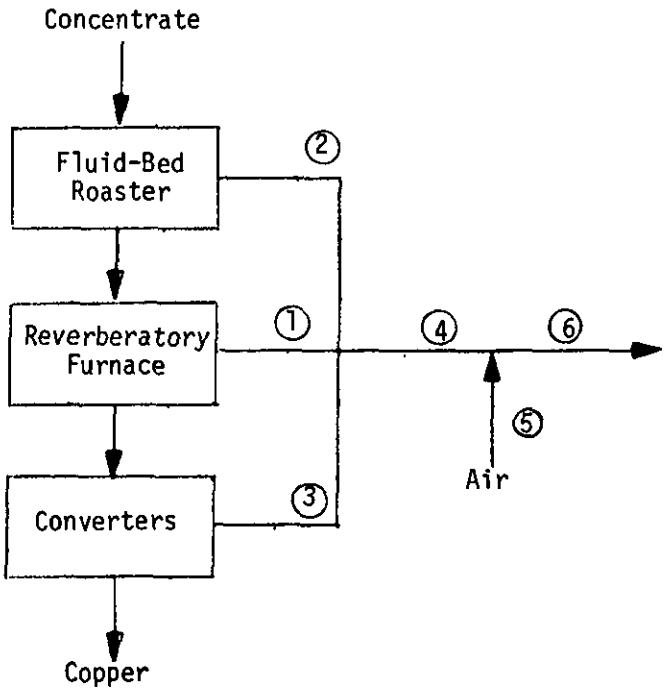

	1	2	3					4				
hr/day	24	24	2	9	4	8	1	2	9	4	8	1
SCFM	45,600	17,100	36,800	18,400	14,300	37,700	-	99,500	81,100	82,000	100,400	62,700
% SO_2	2.25	10	7	7	10.5	8.75	-	5.30	4.96	5.80	6.00	4.35
% O_2	5	5	10.5	10.5	10.5	10.5	-	7.00	6.25	6.29	7.07	5.00

	5				
hr/day	2	9	4	8	1
SCFM	-	714	4833	3652	1952
% SO_2	-	0	0	0	0
% O_2	-	21	21	21	21

	6				
hr/day	2	9	4	8	1
SCFM	99,500	81,814	86,833	104,052	64,652
% SO_2	5.30	4.90	5.50	5.79	4.2
% O_2	7.00	6.37	7.11	7.53	5.48

Figure IX-2. Gas Blending Model for a Green-Charge Smelting Facility

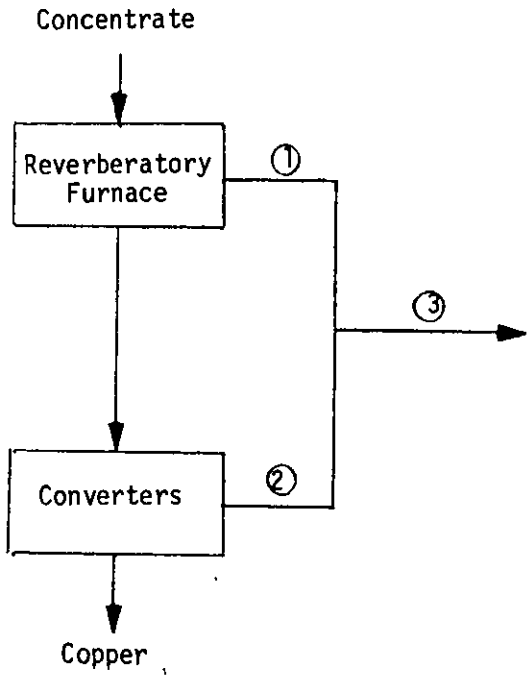

	1	2				
hr/day	24	5	11	2	5	1
SCFM	82,600	61,600	30,800	36,900	65,500	-
% SO_2	1.75	7	7	9	8.5	-
% O_2	5	10.5	10.5	11.75	11	-

	3				
hr/day	5	11	2	5	1
SCFM	144,200	113,400	119,500	148,100	82,600
% SO_2	3.99	3.18	3.99	4.74	1.75
% O_2	7.3	6.49	6.23	7.65	5

TECHNICAL REPORT DATA
(Please read Instructions on the reverse before completing)

1. REPORT NO. EPA-450/2-74-002-a	2.	3. RECIPIENT'S ACCESSION NO.
4. TITLE AND SUBTITLE Background Information for New Source Performance Standards: Primary Copper, Zinc, and Lead Smelters. Volume 1 -- Proposed Standards		5. REPORT DATE October 1974
		6. PERFORMING ORGANIZATION CODE
7. AUTHOR(S)		8. PERFORMING ORGANIZATION REPORT NO.
9. PERFORMING ORGANIZATION NAME AND ADDRESS Environmental Protection Agency Office of Air and Waste Management Office of Air Quality Planning and Standards Research Triangle Park, North Carolina 27711		10. PROGRAM ELEMENT NO.
		11. CONTRACT/GRANT NO.
12. SPONSORING AGENCY NAME AND ADDRESS		13. TYPE OF REPORT AND PERIOD COVERED
		14. SPONSORING AGENCY CODE

15. SUPPLEMENTARY NOTES

16. ABSTRACT

This document presents information on the derivation of proposed standards of performance for new and modified primary copper, zinc, and lead smelters. The report describes the various extraction processes available for copper, zinc, and lead, the various systems available for controlling emissions of sulfur oxides and particulate matter from these processes, the economic impact of the proposed standards, the environmental and energy-consumption effects associated with the various processes and control systems, and the general rationale for the proposed standards.

The standards developed require control at levels typical of best demonstrated existing technology. These levels were determined by extensive on-site investigations; consideration of process design factors, maintenance practices, available test data, and characteristics of plant emissions; comprehensive literature examination; and consultations with the National Air Pollution Control Techniques Advisory Committee, members of the academic community, and industry.

17. KEY WORDS AND DOCUMENT ANALYSIS

a. DESCRIPTORS	b. IDENTIFIERS/OPEN ENDED TERMS	c. COSATI Field/Group
Copper Zinc Lead Sulfur dioxide Smelting Sulfuric Acid plants New source performance standards		

18. DISTRIBUTION STATEMENT Release Unlimited	19. SECURITY CLASS *(This Report)*	21. NO. OF PAGES
	20. SECURITY CLASS *(This page)*	22. PRICE

EPA Form 2220-1 (9-73)

U.S. GOVERNMENT PRINTING OFFICE: 1974 - 640-878/637 - Region 4