Note: This is a reference cited in *AP 42, Compilation of Air Pollutant Emission Factors, Volume I Stationary Point and Area Sources.* AP42 is located on the EPA web site at www.epa.gov/ttn/chief/ap42/

The file name refers to the reference number, the AP42 chapter and section. The file name "ref02_c01s02.pdf" would mean the reference is from AP42 chapter 1 section 2. The reference may be from a previous version of the section and no longer cited. The primary source should always be checked.

AP-42 Section 12.2
Reference
Report Sect. 4
Reference 46

ROUGE STEEL COMPANY
"C" COKE OVEN PUSHING SHED BAGHOUSE
PARTICULATE COMPLIANCE SURVEY

JULY 8-10, 1986

Conducted by

STATIONARY SOURCE ENVIRONMENTAL CONTROL OFFICE
Survey & Compliance Assurance

SURVEY CONDUCTED BY:

T. A. DeWulf

J. M. Miller

D. P. Stangis

D. S. Wood

REPORT PREPARED BY:

T. A. DeWulf

CONCUR:

J. M. Reinke, Manager

ROUGE STEEL COMPANY
"C" COKE OVEN PUSHING SHED BAGHOUSE
PARTICULATE COMPLIANCE SURVEY

Table of Contents

	Subjects	Page
I.	INTRODUCTION	1
II.	PROCESS DESCRIPTION	2
III.	SUMMARY	3
IV.	RESULTS	7
V.	DISCUSSION	8

List of Appendices

A.	Location of Sampling Ports and Points	9
B.	Sampling Procedures	13
C.	Analytical Procedures	18
D.	Field Data Sheets	21
E.	Process Operating Parameters Data Sheets	35
F.	Laboratory Data Sheets	41
G.	Sample Calculations	43
H.	Equipment Calibration	48
I.	Opacity Data Sheets	52

List of Tables

I.	Summary of Results - Particulate/Flow Data	3
II.	Stack Gas Velocity and Flow Results	4
III.	Particulate Sampling Results	5
IV.	Process Operating Data	6

List of Figures

1.	Schematic of Pushing Shed Baghouse and Port Location	11
2.	Sampling Point Location	12
3.	Particulate Sampling Train	15

I. INTRODUCTION

Three tests for particulate emissions and opacity were performed at the "C" Coke Oven Pushing Shed Baghouse Stack on July 8-10, 1986. The survey was conducted to fulfill requirements of operating condition 2c of Installation Permit No. C-6562 issued to Rouge Steel Company on December 10, 1984. Results of the test program are included herein.

The survey was performed by the Ford Motor Company Stationary Source Environmental Control Office. Opacity readings were made by Messrs. D. O'Connor and R. Dawson of Rouge Steel. The test was witnessed by Messrs. S. Drielick and R. Niemi from the Wayne County APCD.

All testing was performed during active periods when ovens in the battery were being pushed. Included with the report are test data and operating data pertaining to each test.

II. PROCESS DESCRIPTION

Coking is a process by which coal is destructively distilled in a reducing atmosphere to produce a relatively nonvolatile coke residue and a volatile gas byproduct. The emissions from the coke oven push are collected in the shed and the dust laden gas is ducted to the collector inlet. As the gas stream enters the control system it is deflected by a baffle plate and the flow is distributed around the baffle to the exterior surface of the filter bags. Clean filtered gas continues through the filter bags, through the clean air plenum, and exits the dust collector to the stack.

The Rouge Steel Company uses a Flakt Norfelt, Model 6NF 378-12, Fabric Filter Dust Collector on the Pushing Shed Baghouse. Refer to Figure No. 1 in Appendix A for a schematic of the complete control system.

III. SUMMARY

Results from this survey are summarized below in Table I. The table includes stack emission results and operating data obtained during test periods.

TABLE I

SUMMARY OF RESULTS
"C" COKE OVEN PUSHING SHED BAGHOUSE
PARTICULATE COMPLIANCE SURVEY
JULY 8-10, 1986

	Units	T-1	T-2	T-3	Avg.
Particulate Emissions *					
Concentration	lbs/ton	.0514	.0495	.0404	.0471
Flowrate	lbs/hr	20.0	19.5	15.7	18.4
Stack Gas Flowrate *					
Actual Conditions	ACFM	165,000	199,000	182000	182,000
Standard Conditions	$SCFM_w$	142,000	173,000	154,000	156,000
Stack Temperature	°F	149	139	150	144

* Particulate Emissions and Stack Gas Flowrates represent conditions which exist during the brief periods when the ovens are pushed. They should not be interpreted as continuous emission rates from the stack.

IV. RESULTS

The individual test results from this survey are presented in the tables which follow. The tables are listed below by title.

TABLE NO.	TITLE
II	Stack Gas Velocity and Flow Results
III	Particulate Sampling Results
IV	Process Operating Data

TABLE NO. II

Rouge Steel Co. - 'C' Coke Oven - Pushing Shed Baghouse

STACK GAS VELOCITY AND FLOW RESULTS

		TEST NUMBER 1	2	3	AVERAGE
PHYSICAL DATA					
DATE OF TEST		7-8-86	7-9-86	7-10-86	
START TIME		0900	0820	0830	
FINISH TIME		1337	1259	1312	
NUMBER OF TRAVERSE POINTS		16	16	16	
PITOT TUBE COEFFICIENT		0.78	0.78	0.78	
MEASURED DATA					
BAROMETRIC PRESSURE	IN HG	29.43	29.43	29.34	
STACK DIAMETER	IN	108	108	108	
STACK STATIC PRESSURE	IN H2O	-0.29	-0.29	-0.29	
STACK GAS TEMPERATURE	DEG F	144	139	150	144
MOLECULAR WEIGHT DRY	LB/LB-MOLE	29.00	29.00	29.00	
CALCULATED DATA					
STACK GAS PRESSURE	IN HG	29.41	29.41	29.32	
MOISTURE	VOLUME %	2.8	2.1	2.0	2.3
WET MOLECULAR WEIGHT	LB/LB-MOLE	28.69	28.77	28.78	28.75
AV. SQRT. OF VEL. PRESS.	IN H2O^.5	0.765	0.932	0.841	0.846
STACK CROSS SEC. AREA	SQ FT	63.62	63.62	63.62	
STACK GAS VEL.-STK. COND.	FT/MIN	2590	3140	2860	2860
STACK GAS VEL.-STD. COND.	FT/MIN	2220	2720	2430	2460
STACK GAS FLOW-STK. COND.	ACFM	165,000	199,000	182,000	182,000
STACK GAS FLOW-DRY COND.	DSCFM	138,000	169,000	151,000	153,000
STACK GAS FLOW-WET COND.	WSCFM	142,000	173,000	154,000	156,000

++
STANDARD CONDITIONS: 68 DEG F AND 29.92 IN HG
++

TABLE NO. III

Rouge Steel Co. - 'C' Coke Oven - Pushing Shed Baghouse

FILTERABLE PARTICULATE SAMPLING RESULTS

		TEST NUMBER 1	2	3	AVERAGE
PHYSICAL DATA					
DATE OF TEST		7-8-86	7-9-86	7-10-86	
START TIME		0900	0820	0830	
FINISH TIME		1337	1259	1312	
NOZZLE DIAMETER	IN	0.250	0.250	0.250	
MEASURED DATA					
METERED SAMPLE VOLUME	CU FT	23.414	29.079	26.701	
AVERAGE METER TEMPERATURE	DEG F	82.6	75.3	78.3	
METER CORRECTION FACTOR		1.0020	1.0020	1.0020	
AVE. ORIFICE PRESSURE DROP	IN H20	1.85	2.74	2.28	
VOLUME OF H20 CONDENSATE	ML	9.0	6.0	5.0	
WEIGHT OF H20 ADSORBED	GRAMS	4.8	7.0	6.1	
TOTAL SAMPLE TIME	MIN	31.4	32.0	32.0	
PROBE WASH WEIGHT	GRAMS	0.0239	0.0221	0.0185	
FILTER CATCH WEIGHT	GRAMS	0.0010	0.0027	0.0018	
WEIGHT OF COAL CHARGED	LB	544,340	558,650	551,520	
COAL TO COKE CONVERSION		0.75	0.75	0.75	
CALCULATED DATA					
METER SAM. VOL.-STD. COND.	CU FT	22.559	28.464	25.879	
TOTAL SAM. VOL.-CORR. STD.	CU FT	23.210	29.077	26.403	
TOTAL PARTICULATE WEIGHT	GRAMS	0.0249	0.0248	0.0203	
PART. CONC.-STACK COND.	GR/ACF	0.0142	0.0114	0.0101	0.0119
PART. CONC.-DRY STD. COND.	GR/DSCF	0.0170	0.0134	0.0121	0.0142
PART. CONC.-WET STD. COND.	GR/WSCF	0.0166	0.0132	0.0119	0.0139
PARTICULATE FLOW RATE	LB/HR	20.0	19.5	15.7	18.4
WEIGHT OF COKE PUSHED	LB	408,255	418,988	413,640	413,628
EMMISSIONS PER TON OF COKE	LB/TON	0.0514	0.0495	0.0404	0.0471
NOZZLE AREA	SQ FT	0.000341	0.000341	0.000341	
ISOKINETIC RATIO	%	97.5	98.1	99.7	

++
STANDARD CONDITIONS: 68 DEG F AND 29.92 IN HG
++

TABLE IV
PROCESS OPERATING DATA
"C" COKE OVEN PUSHING SHED BAGHOUSE
JULY 8-10, 1986

OPERATING PARAMETERS	UNITS	T-1	T-2	T-3
Number of Ovens Pushed		16	16	16
Total Weight Coal Charged	Lbs	544,340	558,650	551,520
Total Weight Coke Pushed	Lbs	408,255	418,988	413,640
Ratio of Coke Pushed to Coal Charged		.75	.75	.75

V. DISCUSSION

Three particulate tests were performed on the Pushing Shed Baghouse Stack on three consecutive days. The emissions averaged .0471 pounds of particulate per tons of coke pushed. Approximately 90% of the total particulate weight was found in the probe and nozzle wash, and 10% was captured on the filter.

The tests were performed during sixteen pushes using one traverse point for each push. Sampling was performed isokinetically and continued for two minutes after the beginning of each push. Sample volumes averaged approximately 26 cubic feet due to the intermittent operation of the process.

Opacity readings obtained during the three tests averaged less than five percent, with zero opacity for most of the pushes.

All of the sampling train leak checks were within the 0.02 cfm allowable limit, and isokinetic sampling ratios were within 90-110%. The only problem encountered during the three days of testing was during the third test when the umbilical cord fell from its support and jarred the sample box. A leak check was performed prior to sampling the next point and the train proved to be leak-free. The air volume allocated for the leak check was subtracted from the sample volume for Test No. 3.

APPENDIX A

LOCATION OF SAMPLING PORTS AND POINTS

APPENDIX A

LOCATION OF SAMPLING PORTS AND POINTS

Figures 1 and 2 which follow show the locations of the sampling ports and points for the "C" Coke Oven Pushing Shed Baghouse Stack. This location is nearly seven duct diameters upstream and approximately 1.3 diameters downstream from the nearest flow disturbances as shown in Figure 1.

Figure 2 shows the relative position of the sixteen sampling points used for this survey. Sixteen points equals the number required for a sampling location of this configuration according to the September 30, 1983 Federal Register.

FIGURE NO.1
PUSHING SHED BAGHOUSE
ROUGE STEEL COMPANY

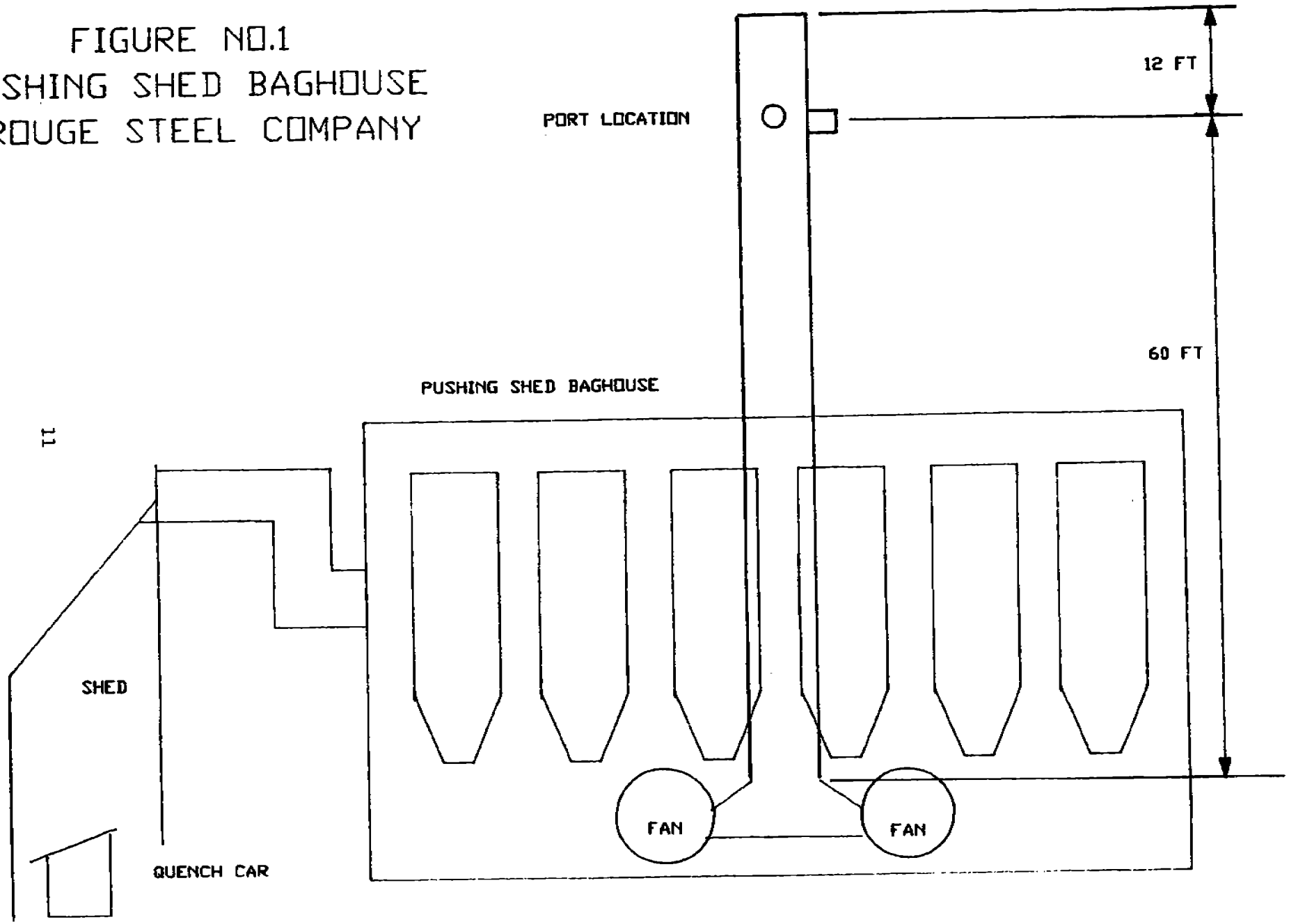

Figure 2

Location of Sampling Points

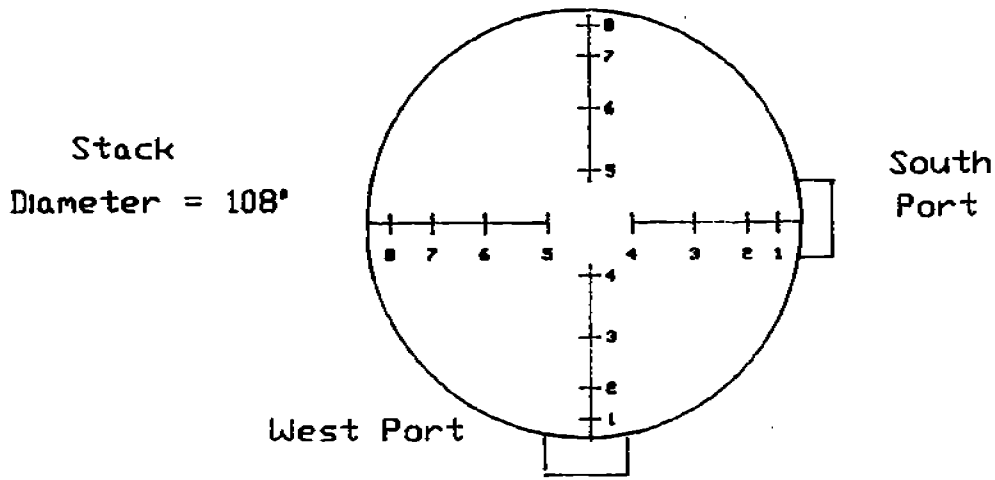

Traverse Point No.	Distance from Stack Wall
1	3 1/2"
2	11 3/8"
3	21"
4	34 7/8"
5	73 1/8"
6	87"
7	96 5/8"
8	104 1/2"

APPENDIX B

SAMPLING PROCEDURES

APPENDIX B

SAMPLING PROCEDURES

Three complete tests are run over a three day period. During each test the following parameters are measured:

- Exhaust gas velocity and flow
- Exhaust gas temperature
- Moisture content of exhaust gas
- Particulate flowrate

The sampling procedures used to measure the exhaust gas velocity and particulate concentrations are consistent with EPA Test Methods 1, 2, and 5.* Integrated Orsat measurements to determine excess air and dry molecular weight of the stack gases are taken in accordance with EPA Test Method 4.*

A. Sampling Train

The sampling train used in this survey appears in Figure 3. As shown, the front half consists of a stainless steel nozzle and probe liner, cyclone bypass, and a 110mm glass fiber filter. This portion of the train is heated to a maximum temperature of 250°F ± 25°F.

The condenser portion of the train consists of four plastic "impingers", connected in series with Tygon tubing, placed in an ice

*CFR Part 60, Subpart A, Appendix A - Reference Methods

FIGURE 3

PARTICULATE SAMPLING TRAIN

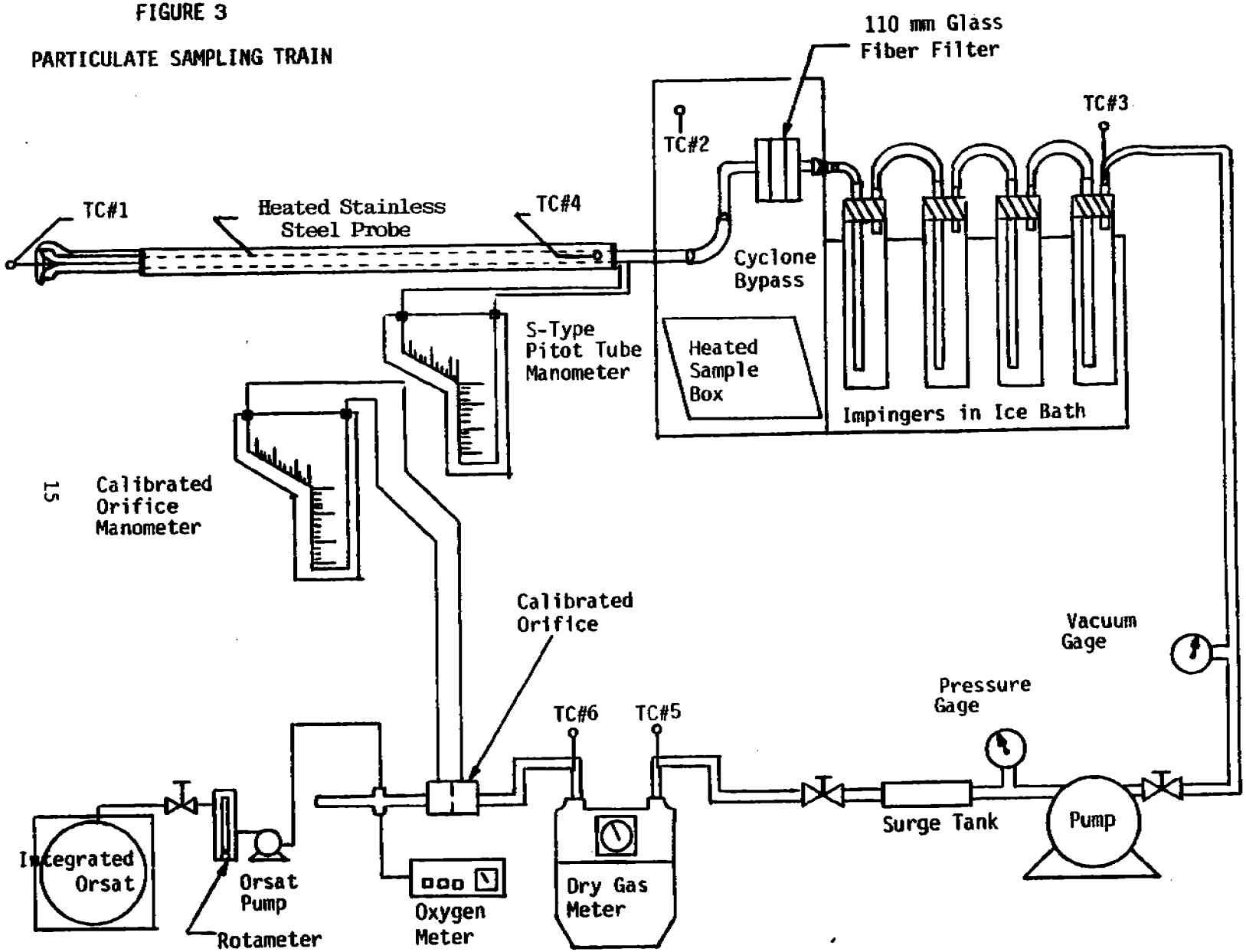

bath. The first two contain 150 ml distilled water, the third is empty and the fourth contains approximately 200 grams of preweighed silica gel.

The dry, filtered exhaust gas exits the condenser section and goes to the metering portion of the sampling train. This consists of a leakless vacuum pump, dry gas meter and orifice.

Six thermocouples are located throughout the sampling train as shown in Figure 3. They are connected to a multipoint potentiometer with digital readout, mounted on the face of the meter box. Also on the face of the box is a twin-tube manometer which is used in measuring stack velocity pressures and orifice pressure differentials.

B. Particulate Sampling Procedures

1. Stack Gas Velocity and Flow

Stack gas velocity is measured with a calibrated S-type pitot tube on the probe assembly. The stack temperature is monitored using a thermocouple at the tip of the probe.

2. Particulate concentration

Particulate from the exhaust stream is captured in the front half of the sampling train and the net gain of material is measured gravimetrically after following a routine clean-up and evaporation procedure.

gravimetrically after following a routine clean-up and evaporation procedure.

3. Moisture Content

The moisture content of the exhaust gas is determined by measuring the volume of the condensate in the first three "impingers" and the weight gain of silica gel in the fourth. Results are calculated based on condensate and gas volumes measured during the test.

APPENDIX C

ANALYTICAL PROCEDURES

APPENDIX C

ANALYTICAL PROCEDURES

A. Field Procedures

At the completion of each test the nozzle and probe liner are washed with known quantities of acetone into a clean, appropriately labeled sample bottle. The filter holder, cyclone bypass and flask from each test are capped with rubber stoppers in the field and placed in a protective glassware box for shipment to our laboratory.

All impinger liquids are measured for total volume after each test and then discarded. Silica gel is removed from the fourth impinger and placed in its original container for transport.

A blank acetone sample is collected at the site and returned to the laboratory for processing with survey samples.

B. Laboratory Procedures

1. Particulate Concentration

In the laboratory, the acetone rinse from the sampling train nozzle and probe wash is placed in a tared evaporating dish. Added to this are acetone rinses from the corresponding cyclone bypass and front filter half from the train.

Dish contents are evaporated to dryness over a water bath maintained at 130°F, desiccated to constant weight at room temperature, and weighed on a Torbal analytical balance with a sensitivity of 0.1 mg.

The glass fiber filter from each test is removed from its holder and transferred to its original aluminum foil envelope. The filter is oven-dried for two hours at 105°C, placed in a desiccator overnight and weighed on a Torbal balance.

The weight gains of the acetone rinse and filter are added and reported as particulate catch.

2. Moisture Content

The silica gel from the fourth impinger is weighed on an analytical balance having a sensitivity of 0.1 gram. The resulting weight gain is converted to volume and added to the volumes of water condensate measured in the impingers after each test in order to determine the moisture content of the exhaust gas.

APPENDIX D

FIELD DATA SHEETS

FORD MOTOR COMPANY
STATIONARY SOURCE ENVIRONMENTAL CONTROL OFFICE

SOURCE C Push Control Bag House
PLANT Rouge
DATE 7/8/86
INITIALS DSW - JMM
TEST NO. 1

NOTES

Nozzle size
.250
.250 } .250
.250

STACK Temp ~ 145

ORIFICE COEFFICIENT CHECK

	SAMPLE TIME (Min.)	P_{bar} (In Hg)	Orifice Δh (In H_2O)	Meter Reading (ft^3)	Meter Inlet Temp. (°F)	Meter Outlet Temp. (°F)
FINISH	575.0	29.51	1.0	288.015	84/85	83/83
START	565.0	29.51	1.0	282.312	84/86	83/83
AVG/NET	10.0	29.51	1.0	5.703	84.6	83.0

$$\Delta H = \frac{(0.03175)\ (\Delta h)\ (P_{bar})}{(T_{m\text{-}out} + 460)} \left[\frac{(T_{m\text{-}avg} + 460)\ \theta}{(V_m)\ (P_{bar} + \Delta h/13.6)} \right]^2$$

$$\Delta H = \frac{(0.03175)(1.0)(29.51)}{543} \; 22 \left[\frac{(543.9)\,10}{(5.703)(29.51 + 1.0/13.6)} \right]^2$$

ΔH = 1.79/1.76

FORD MOTOR COMPANY
STATIONARY SOURCE ENVIRONMENTAL CONTROL OFFICE

PITOT TUBE CALIBRATION DATA

SOURCE C Push Control Bag House
PLANT Rouge
DATE 7/7/86
INITIALS DSW - JMM
TEST NO. 1

STACK DIMENSIONS 108"
NIPPLE LENGTH 6"
STATIC PRESSURE -.29
BAROMETRIC PRESSURE 29.51
TIME

Port/ Point	Percent Diameter	Decimal Equiv.	Fraction Equiv.	Total Incl. Nipple	Standard Pitot Tube		"S" Pitot Tube No. 1		"S" Pitot Tube No. 2		Stack Temperature	
					ΔP	√ΔP	ΔP	√ΔP	ΔP	√ΔP	Dry Bulb	Wet Bulb
	3.2	3.46	3 1/2	9 1/2								
	10.5	11.34	11 3/8	17 3/8								
	19.4	20.95	21	27								
	32.3	34.88	34 7/8	40 7/8								
	67.7	73.12	73 1/8	79 1/8								
	80.6	87.05	87	93								
	89.5	96.66	96 5/8	102 5/8								
	96.8	104.54	104 1/2	110 1/2								
Total												
Average												

Pitot Tube No. 1 $Cp = \frac{\sqrt{\Delta P_{stnd}}}{\sqrt{\Delta P_{S-1}}}$ = _____ = 23 _____

Pitot Tube No. 2 $Cp = \frac{\sqrt{\Delta P_{stnd}}}{\sqrt{\Delta P_{S-2}}}$ = _____ = _____

FORD MOTOR COMPANY
STATIONARY SOURCE ENVIRONMENTAL
CONTROL OFFICE

Source: C Push Control Bag House
Plant: Rouge
Date: 7-8-86
Initials: DSW - JJM

Test No.: 1

Sampling Train Information

Filter Type	110 mm A/E	Sample Box No.	1	Nozzle Diameter	.250
Filter No.	D	Probe No.	1	Nozzle Material	S.S.
Cyclone & Flask No.	Brass	Probe Material	S S	Meter Box No.	2
Silica Gel No.	4	Probe Length	10'	Meter Box ΔH	1.76

Leak Test Data

	Prelim. Reading	Time / Date	Initial Reading	Time	Final Reading	Time
Meter and Orifice	ok 6.5" H_2O	7/7/86	ok	7/8/86	ok	7/8/86
Pump and Surge Tank	ok 22" psig	7/7/86	ok	7/8/86	ok	7/8/86
Meter Box, Cord, Sample Box, Probe	<.005 cfm @ 20" Hg	7/7/86	<.005 cfm @ 16" Hg	7/8/86	<.005 cfm @ 15" Hg	7/8/86
Pitot Tube Total Pressure Line	ok 4.8" H_2O	7/7/86	ok 5.7" H_2O	7/8/86	ok	7/8/86
Pitot Tube Static Pressure Line	ok 7.2" H_2O	7/7/86	ok 6.3" H_2O	7/8/86	ok	7/8/86

Impinger Data

Impinger Number	1	2	3	4
Impinger Contents	H_2O	H_2O	—	Silica Gel
Final Volume (ml)	156	152	1	238.2
Initial Volume (ml)	150	150	0	233.4
Volume Collected(ml)	6	2	1	4.8
			Total	13.8

9 + 4.8 = 13.8

FORD MOTOR COMPANY
STATIONARY SOURCE ENVIRONMENTAL CONTROL OFFICE

H_2O % = 2
meter Temp = 85
STACK Temp = ~145°F

NOMOGRAPH C FACTOR DETERMINATION

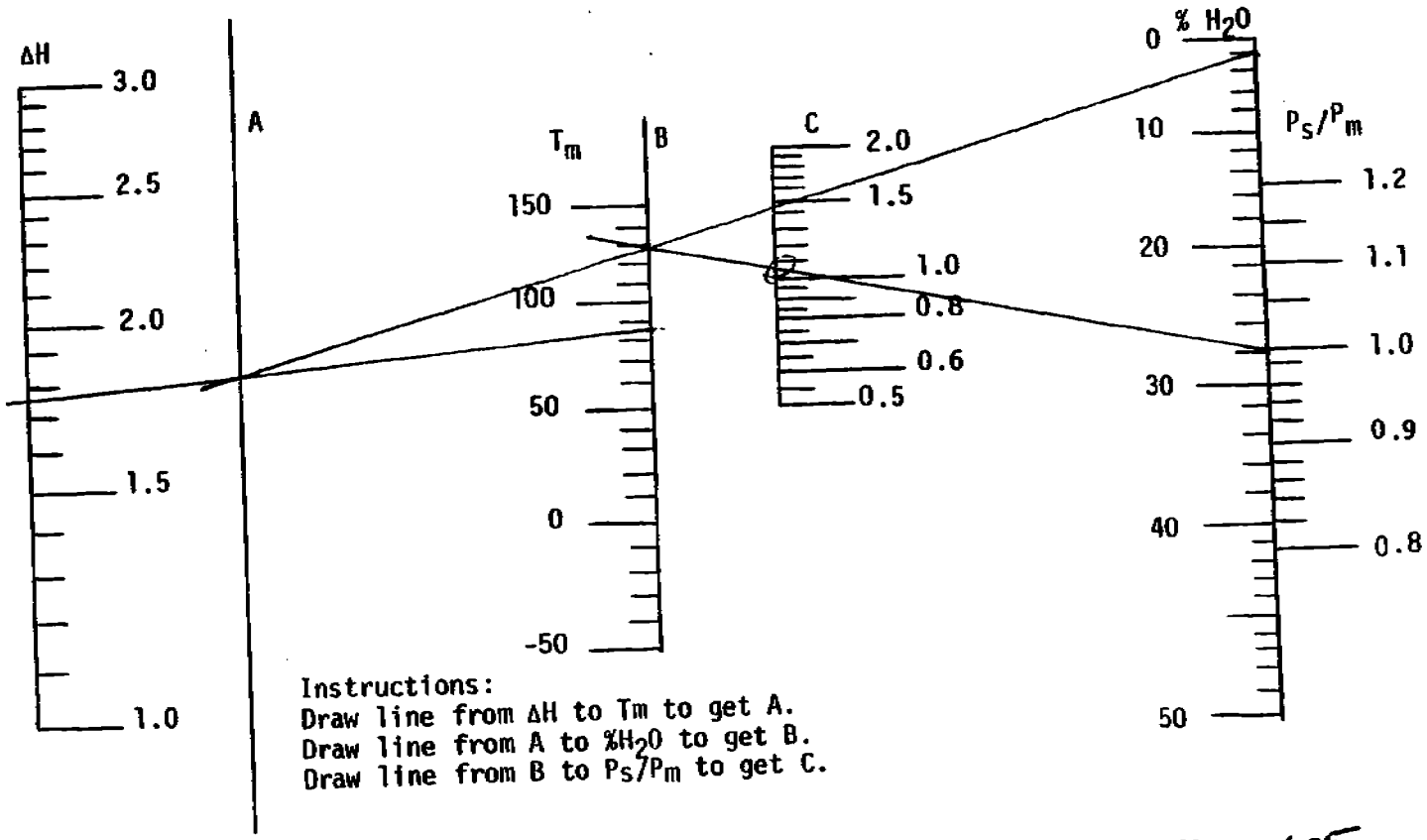

Instructions:
Draw line from ΔH to Tm to get A.
Draw line from A to $\%H_2O$ to get B.
Draw line from B to P_s/P_m to get C.

SOURCE C Push Control Bag House
PLANT Rouge
DATE 7/8/86
INITIALS DSW - SMM
TEST NO. 1
METER BOX NO. 2
ΔH ORIFICE 1.76

AMBIENT TEMPERATURE
BAROMETRIC PRESSURE (P_{bar}) 29.43
STATIC PRESSURE (P_{sp}) -.29/13.6 = .021
$P_s = P_{bar} + P_{sp}$ = 29.54 + -.020 = 29.52
(Assumed Δh) 1.5 Δh/13.6= .11
$P_m = P_{bar}$ + Δh/13.6= 29.43 + .11 = 29.54
P_s/P_m = 29.52/29.54 = .999

C FACTOR 1.05
PITOT TUBE Cp .78
CORRECTED C FACTOR, (C_c)=
$(C)(Cp/.85)^2$ = 1.05 $(.78/.85)^2$
C_c = .884 or .88

FORD MOTOR COMPANY
STATIONARY SOURCE ENVIRONMENTAL CONTROL OFFICE

C-Push Control Bag House — TEST NO. 1 — CORR. C FACTOR .48 — P_{Bar} = 29.43 — MCF 1.0020
Reign — MIN/PNT 16-20 min — NOM. SET POINT .58
7/8/86 — INITIALS DSW-JMM

Number	Clock Time	Meter Box Clock Time	Percent O_2 at Sample Point	Velocity Head, ΔP	$\sqrt{\Delta P}$	Nomograph ΔH Orifice	Meter Reading	Pump Vacuum	Selector Switch Number 1: Stack Temperature	2: Sample Box Temperature	3: Gas Temp. Leaving Last Impinger	4: Probe Temperature	5: Gas Temperature at Meter Inlet	6: Gas Temperature at Meter Outlet
	Actual	Min	%	In.H_2O	In.$H_2O^{1/2}$	In.H_2O	Ft^3	In Hg	°F	°F	°F	°F	°F	°F
							287.724	2.0	128	258	110	249	79	81
1	900	580.0	20.3	.38		1.18	290.670	3.5	138	244	112	252	80	81
2	920	581.6	20.3	.42		1.31	291.794	6.5	139	257	111	251	81	82
3	955	583.4	20.4	.75		2.38	293.482	5.0	139	251	108	253	82	82
4	1020	585.4	20.4	.55		1.72	294.975	4.5	142	250	107	251	82	82
5	1030	587.4	20.4	.50		1.56	296.372	4.5	148	248	101	248	81	82
6	1040	589.4	20.2	.48		1.49	[illegible]	7.0	151	248	100	258	81	83
7	1050	591.4	—	.75		2.38	299.397	5.0	151	248	97	261	82	83
8	1100	593.4	—	.50		1.56	300.801	5.0	148	248	107	257	83	84
1	1110	595.4	—	.56		1.56	302.195	4.0	140	246	109	245	82	83
2	1205	597.4	—	.42		1.31	303.488	6.5	147	247	104	247	82	83
3	1220	599.4	—	.70		2.17	305.192	7.0	139	253	110	254	83	84
4	1255	601.4	—	.75		2.38	306.796	7.5	146	255	107	249	83	84
5	1305	603.4	—	.75		2.38	308.497	7.0	150	258	114	246	84	84
6	1312	605.4	—	.70		2.17	310.152	7.5	150	256	113	259	85	86
7	1325	607.4	—	.70		2.17	311.795	5.0	155	251	104	254	84	86
8	1335	609.4	—	.64		1.95	313.143							
	1337	611.4												
Total														

FORD MOTOR COMPANY
STATIONARY SOURCE ENVIRONMENTAL CONTROL OFFICE

SOURCE C Push Control Bag House
PLANT Rouge
DATE 7/9/86
INITIALS DSW - JMM
TEST NO. 2

NOTES

NOZZLE SIZE

.250
.250
.250 } .250

STACK TEMP ~195°F

ORIFICE COEFFICIENT CHECK

	SAMPLE TIME (Min.)	P_{bar} (In Hg)	Orifice Δh (In H_2O)	Meter Reading (ft^3)	Meter Inlet Temp. (°F)	Meter Outlet Temp. (°F)
FINISH						
START						
AVG/NET						

$$\Delta H = \frac{(0.03175)\ (\Delta h)\ (P_{bar})}{(T_{m\text{-}out} + 460)} \left[\frac{(T_{m\text{-}avg} + 460)\ \theta}{(V_m)\ (P_{bar} + \Delta h/13.6)} \right]^2$$

$$\Delta H = (0.03175) \underline{\qquad\qquad} \left[\underline{\qquad\qquad} \right]^2$$

27

ΔH = 1.79/1.76

FORD MOTOR COMPANY
STATIONARY SOURCE ENVIRONMENTAL
CONTROL OFFICE

Source: C Push Control Bag House
Plant: Rouge
Date: 7/9/86
Initials: DSW - JMM
Test No.: 2

		Sampling Train Information			
Filter Type	110 gm A/E	Sample Box No.	1	Nozzle Diameter	.250
Filter No.	E	Probe No.	1	Nozzle Material	SS.
Cyclone & Flask No.	Bypass	Probe Material	S.S.	Meter Box No.	2
Silica Gel No.	5	Probe Length	10'	Meter Box ΔH	1.76

	Leak Test Data					
	Prelim. Reading	Time Date	Initial Reading	Time	Final Reading	Time
Meter and Orifice	ok	7/9/86	→		ok	7/9/86
Pump and Surge Tank	ok	7/9/86	→		ok	7/9/86
Meter Box, Cord, Sample Box, Probe	< .005 CFM @ 15" Hg	7/9/86	< .005 CFM @ 16" Hg	7/9/86	< .005 CFM @ 16" Hg	7/9/86
Pitot Tube Total Pressure Line	ok 5.1" H_2O	7/9/86	ok 5.0" H_2O	7/9/86	ok	7/9/86
Pitot Tube Static Pressure Line	ok 5.2" H_2O	7/9/86	ok 6.7" H_2O		ok	7/9/86

	Impinger Data			
Impinger Number	1	2	3	4
Impinger Contents	H_2O	H_2O	—	Silica Gel
Final Volume (ml)	154	151	1	230.1
Initial Volume (ml)	150	150	0	223.1
Volume Collected(ml)	4	1	1	7.0
			Total	13.0

6 + 7 = 13.0

FORD MOTOR COMPANY
STATIONARY SOURCE ENVIRONMENTAL CONTROL OFFICE

EC Ash Control Bag House — TEST NO. 2
Rouge — MIN/PNT 2
7/9/86 — INITIALS DSW-JMM
CORR. C FACTOR .88 — NOM. SET POINT .58
P_{Bar} = 29.43 — MCF 1.0020

Number	Clock Time	Meter Box Clock Time	Percent O_2 at Sample Point	Velocity Head, ΔP	$\sqrt{\Delta P}$	Nomograph ΔH Orifice	Meter Reading	Pump Vacuum	Selector Switch Number 1: Stack Temperature	2: Sample Box Temperature	3: Gas Temp. Leaving Last Impinger	4: Probe Temperature	5: Gas Temperature at Meter	6: Gas Temperature at Meter
	Actual	Min	%	In.H_2O	In.$H_2O^{1/2}$	In.H_2O	Ft^3	In Hg	°F	°F	°F	°F	Inlet °F	Outlet °F
1	0820	615.0		.58		1.80	313.902	2.0	137	243	93	244	76	77
2	0832	617.0		.24		.73	315.327	1.0	139	246	96	250	76	77
3	0847	619.0		.95		2.95	316.243	4.0	150	251	97	253	76	77
4	0855	621.0		1.00		3.11	318.166	4.0	149	255	98	252	77	77
5	0907	623.0		1.00		3.11	320.124	4.0	148	255	96	250	77	78
6	0918	625.0		1.00		3.11	322.073	4.0	145	254	98	247	77	78
7	0958	627.0		1.10		3.41	324.031	4.0	124	253	101	247	76	77
8	1013	629.0		.95		2.90	326.052	3.0	137	252	97	245	75	76
1	1030	631.0		.75		2.35	327.944	2.0	130	250	85	242	73	74
2	1045	633.0		.95		2.90	329.667	3.0	124	246	79	249	71	73
3	1055	635.0		1.00		3.11	331.544	3.0	137	245	83	250	70	72
4	1112	637.0		1.00		3.11	333.495	3.0	133	247	93	256	70	72
5	1125	639.0		1.00		3.11	335.457	3.0	133	256	100	254	71	73
6	1230	641.0		.95		2.90	337.416	4.0	140	258	110	250	76	77
7	1243	643.0		.95		2.90	339.327	4.0	142	257	113	257	77	77
8	1257	645.0		.75		2.35	341.239	3.5	153	254	112	251	78	78
	1259	647.0					342.981							
Total														
Average														

H_2O % = 2
Meter Temp = 85 °F
Stack Temp = 145 °F

FORD MOTOR COMPANY
STATIONARY SOURCE ENVIRONMENTAL CONTROL OFFICE

NOMOGRAPH C FACTOR DETERMINATION

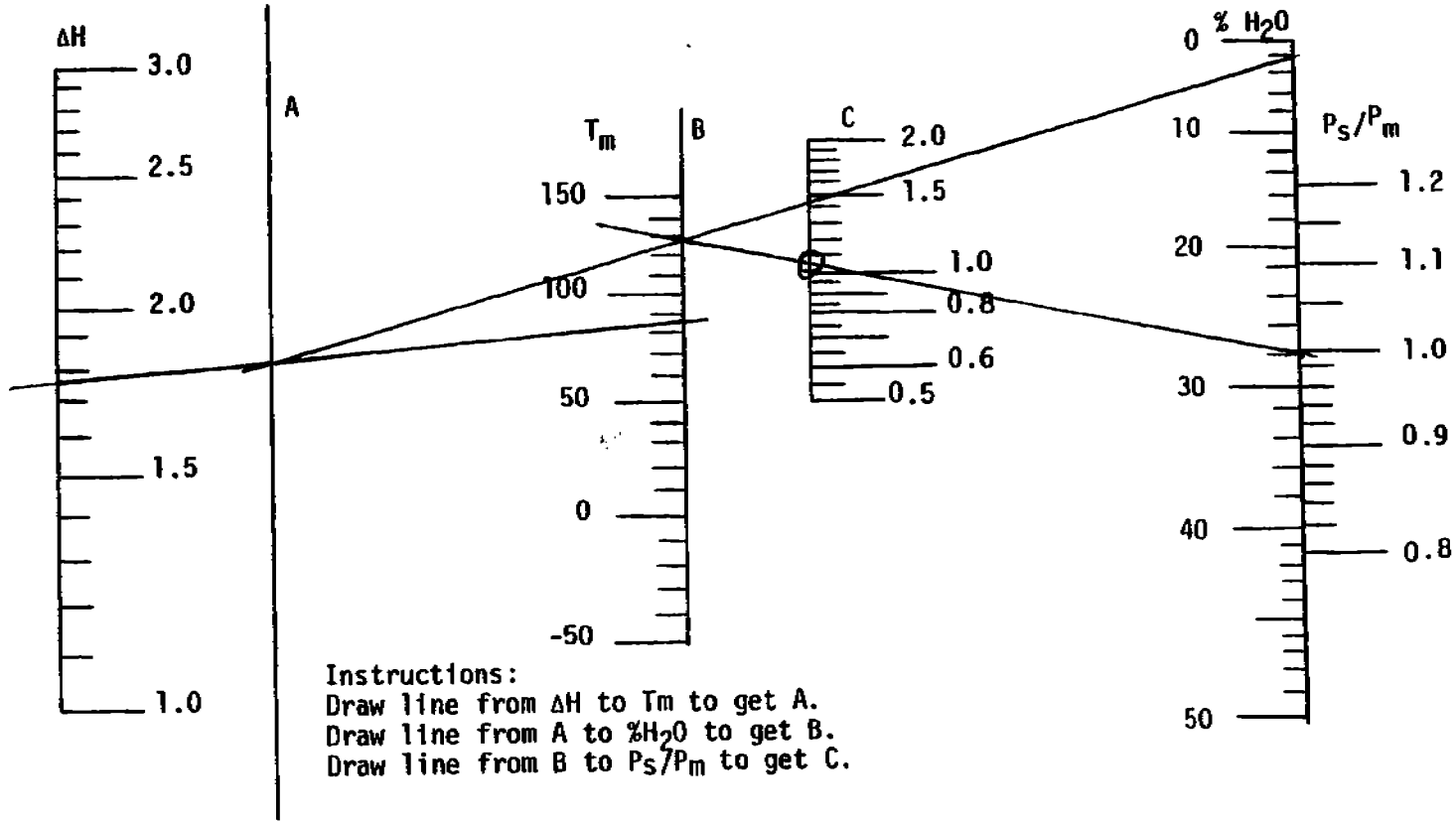

Instructions:
Draw line from ΔH to Tm to get A.
Draw line from A to $\%H_2O$ to get B.
Draw line from B to P_s/P_m to get C.

SOURCE C. Posh Control Bag House
PLANT Rouge
DATE 7/9/86
INITIALS DSW - JMM
TEST NO. 2
METER BOX NO. 2
ΔH ORIFICE 1.76

AMBIENT TEMPERATURE
BAROMETRIC PRESSURE (P_{bar}) 29.11
STATIC PRESSURE (P_{sp}) -.29/13.6 = .021
$P_s = P_{bar} + P_{sp}$ = 29.11 + -.021 = 29.09
(Assumed Δh) 1.5 Δh/13.6 = .11
$P_m = P_{bar} + \Delta h/13.6$ = 29.11 + .11 = 29.22
P_s/P_m = 29.09 / 29.22 = .996

C FACTOR 1.05
PITOT TUBE Cp .78
CORRECTED C FACTOR, (C_c) =
$(C)(C_p/.85)^2$ = 1.05 (.78/.85)^2
C_c = .8840 or .88

FORD MOTOR COMPANY
STATIONARY SOURCE ENVIRONMENTAL CONTROL OFFICE

SOURCE C Push Control Bag House
PLANT Rouge
DATE 7/10/80
INITIALS DSW - JMM
TEST NO. 3

NOTES

Nozzle size

.250
.250
.250 } .250

STACK Temp ~ 145 °F

ORIFICE COEFFICIENT CHECK

	SAMPLE TIME (Min.)	P_{bar} (In Hg)	Orifice Δh (In H_2O)	Meter Reading (ft^3)	Meter Inlet Temp. (°F)	Meter Outlet Temp. (°F)
FINISH						
START						
AVG/NET						

$$\Delta H = \frac{(0.03175)\ (\Delta h)\ (P_{bar})}{(T_{m\text{-}out} + 460)} \left[\frac{(T_{m\text{-}avg} + 460)\ \theta}{(V_m)\ (P_{bar} + \Delta h/13.6)} \right]^2$$

$$\Delta H = (0.03175) \underline{\qquad\qquad} \left[\underline{\qquad\qquad} \right]^2$$

31

ΔH = 1.79/1.76

FORD MOTOR COMPANY
STATIONARY SOURCE ENVIRONMENTAL
CONTROL OFFICE

Source: ~~C Gen~~ C Push Control Bag House
Plant: Rouge
Date: 7/10/86
Initials: DSW - JMM

Test No.: 3

Sampling Train Information

Filter Type	110mm A/E	Sample Box No.	1	Nozzle Diameter	.250
Filter No.	F	Probe No.	1	Nozzle Material	S.S.
Cyclone & Flask No.	BYPASS	Probe Material	S.S	Meter Box No.	2
Silica Gel No.	6	Probe Length	10'	Meter Box ΔH	1.76

Leak Test Data

	Prelim. Reading	Time / Date	Initial Reading	Time	Final Reading	Time
Meter and Orifice	ok	7/10/86	→		ok	7/10/86
Pump and Surge Tank	ok	7/10/86	→		ok	7/10/86
Meter Box, Cord, Sample Box, Probe	ok <.005 CFM @ 15" Hg	7/9/86	<.005 CFM ok @ 16" Hg	7/10/86	<.005 CFM ok @ 15" Hg	7/10/86
Pitot Tube Total Pressure Line	ok 8.0" H_2O	7/9/86	ok 4.7" H_2O	7/10/86	ok	7/10/86
Pitot Tube Static Pressure Line	ok 6.1" H_2O	7/9/86	ok 6.6" H_2O	7/10/86	ok	7/10/86

Impinger Data

Impinger Number	1	2	3	4
Impinger Contents	H_2O	H_2O	—	Silica Gel
Final Volume (ml)	154	150	1	232.1
Initial Volume (ml)	150	150	0	226.0
Volume Collected(ml)	4	0	1	6.1
			Total	11.1

5 + 6.1 = 11.1

FORD MOTOR COMPANY
STATIONARY SOURCE ENVIRONMENTAL CONTROL OFFICE

H_2O % = 2
STACK TEMP = 145°F
BOX TEMP = 80°F

NOMOGRAPH C FACTOR DETERMINATION

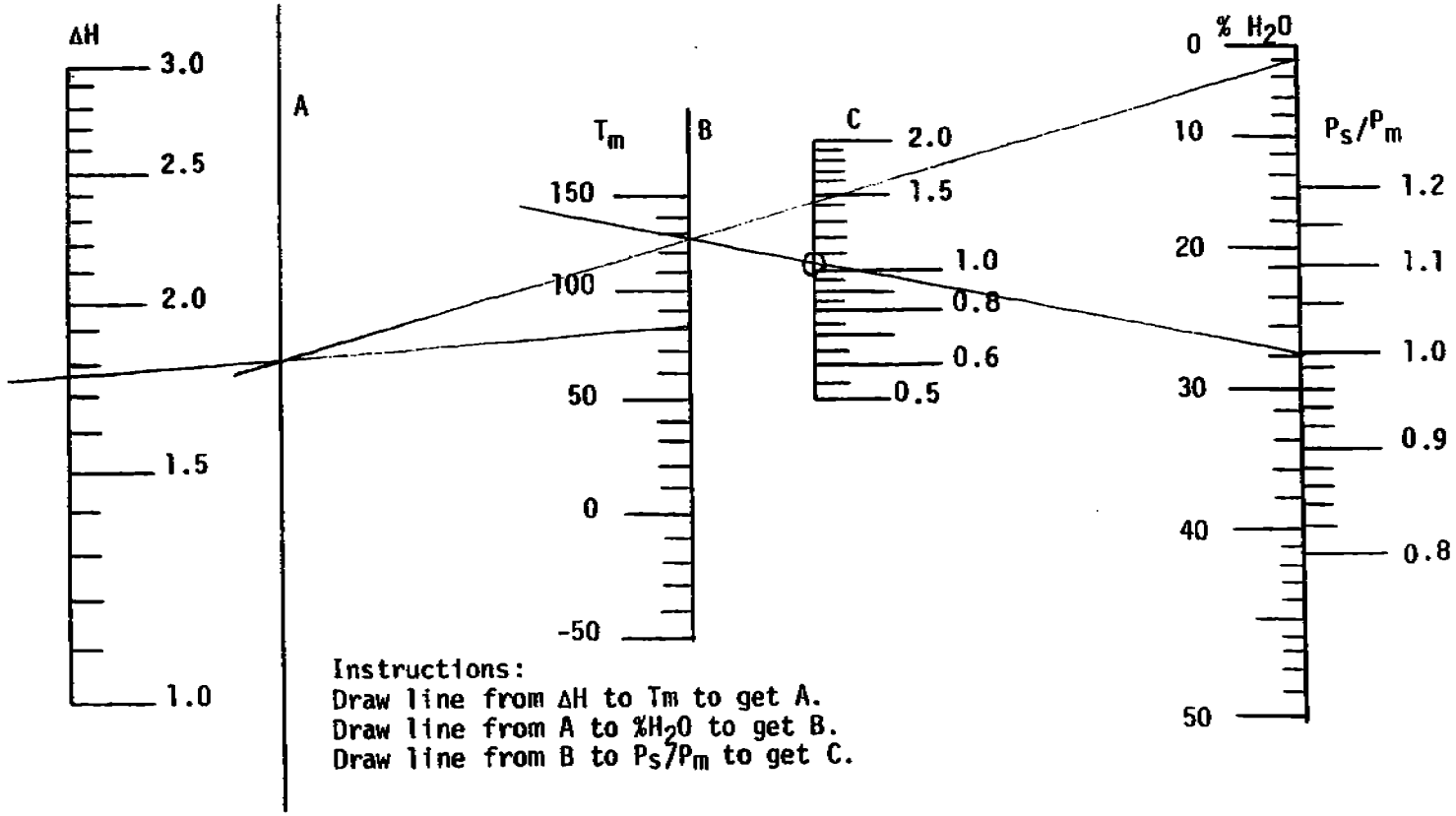

Instructions:
Draw line from ΔH to Tm to get A.
Draw line from A to $\%H_2O$ to get B.
Draw line from B to P_s/P_m to get C.

SOURCE Rust Control Bay House
PLANT Rouge
DATE 7/10/86
INITIALS DSW-JMM
TEST NO. 3
METER BOX NO. 2
ΔH ORIFICE 1.76

AMBIENT TEMPERATURE
BAROMETRIC PRESSURE (P_{bar}) 29.34
STATIC PRESSURE (P_{sp}) -.29/13.6 = .021
$P_s = P_{bar} + P_{sp}$ = 29.34 + -.021 = 29.32
(Assumed Δh) 1.5 Δh/13.6= .11
$P_m = P_{bar} + \Delta h/13.6$= 29.34 + .11 = 29.45
P_s/P_m = 29.32/29.45 = .996

C FACTOR 1.05
PITOT TUBE Cp .78
CORRECTED C FACTOR, (C_c)=
$(C)(C_p/.85)^2$ = 1.05 $(.78/.85)^2$
C_c = .884 OR .88

FORD MOTOR COMPANY
STATIONARY SOURCE ENVIRONMENTAL CONTROL OFFICE

Ash Control Bag House — TEST NO. 3
Rouge — MIN/PNT 2
7/18/86 — INITIALS DSW - JMM

CORR. C FACTOR .88
NOM. SET POINT .58

P_{Bar} = 29.34 MCF 1.0020

Clock Time	Meter Box Clock Time	Percent O_2 at Sample Point	Velocity Head, ΔP	$\sqrt{\Delta P}$	Nomograph ΔH Orifice	Meter Reading	Pump Vacuum	Selector Switch Number 1: Stack Temperature	2: Sample Box Temperature	3: Gas Temp. Leaving Last Impinger	4: Probe Temperature	5: Gas Temperature at Meter	6:
Actual	Min	%	In.H_2O	In.$H_2O^{1/2}$	In.H_2O	Ft^3	In Hg	°F	°F	°F	°F	Inlet °F	Outlet °F
0830	650.0	20.2	.45		1.46	343.544	1.0	141	254	101	249	74	74
0838	652.0	20.3	.50		1.59	344.853	1.0	143	253	96	247	74	74
0850	654.0	20.3	.80		2.58	346.241	3.5	144	254	99	249	74	74
0910	656.0	20.0	.85		2.71	348.006	4.0	151	256	100	252	76	76
0920	658.0	20.0	.85		2.71	349.850	4.0	152	255	101	254	76	76
0930	660.0	19.8	.80		2.58	351.662	4.0	153	253	102	252	76	76
1057	662.0	19.8	.78		2.50	353.463	3.8	155	249	101	254	77	77
1012	664.0	20.3	.75		2.40	355.218	3.8	147	251	112	249	77	77
1025	666.0	19.6	.50		1.59	356.928	2.8	144	251	108	247	78	79
1038	668.0	20.0	.45		2.05	358.344	3.5	155	252	111	247	79	79
1053	670.0	20.2	.75		2.40	359.931	4.5	155	253	104	245	80	80
	672.0					361.668	* LEAK CHECK OK @ 15" Hg						
1113	672.5	19.9	.73		2.31	361.736	4.3	154	251	104	250	81	81
1133	674.5	20.2	.75		2.40	363.377	4.3	149	247	106	251	81	81
1243	676.5	20.0	.78		2.50	364.996	5.0	151	254	109	250	83	83
1256	678.5	20.2	.75		2.40	366.862	5.0	150	247	107	253	83	83
1310	680.5	20.5	.73		2.31	368.606	5.0	150	243	112	252	84	84
al 1312	682.5					370.313							
rage													

APPENDIX E

PROCESS OPERATING PARAMETERS DATA SHEETS

ROUGE STEEL CORPORATION
'C' PUSHING SHED BAGHOUSE
CONTROL ROOM DATA
TESTS #1 & #2

DATE	TIME	DIFFERENTIAL PRESSURE						AMPERAGE		INLET PRESSURE	
		1	2	3	4	5	6	SEF	NEF	SFI	NFI
7-08-86	9:35	7.21	8.01	8.11	8.69	8.79	7.91	47	44	15.01	15.99
7-09-86	8:52	2.76	3.04	3.03	3.48	3.74	4.92	50	46	11.25	15.25
7-09-86	9:07	6.31	7.26	7.19	-0.12	7.83	7.14	47	44	11.99	15.77
7-09-86	9:42	1.81	2.06	1.94	2.17	2.19	1.04	40	40	2.87	6.01
7-09-86	9:59	3.63	4.11	4.38	4.81	5.71	4.97	50	46	12.28	16.01
7-09-86	10:22	-0.37	7.08	6.76	7.01	7.09	6.02	50	46	12.36	16.52
7-09-86	10:45	4.84	5.75	5.57	5.97	6.52	5.71	50	46	11.55	16.81
7-09-86	10:59	7.56	7.55	7.33	7.59	7.73	-0.19	50	46	11.71	16.62
7-09-86	11:12	5.22	6.02	6.06	6.15	6.49	5.28	48	45	13.11	16.99
7-09-86	11:25	5.23	6.07	6.09	6.31	6.42	5.46	49	45	14.09	17.01
7-09-86	12:58	5.34	6.09	7.47	7.88	8.05	-1.01	46	43	16.31	-1.91

ROUGE STEEL CORPORATION
'C' PUSHING SHED BAGHOUSE
CONTROL ROOM DATA
TEST #3

DATE	TIME	DIFFERENTIAL PRESSURE						AMPERAGE		INLET PRESSURE	
		1	2	3	4	5	6	SEF	NEF	SFI	NFI
7-10-86	7:59	3.74	4.82	5.11	5.36	5.51	4.27	38	38	8.22	-1.63
7-10-86	8:24	4.44	4.88	5.35	5.87	6.09	5.06	32	52	10.48	15.15
7-10-86	8:37	6.21	6.65	7.36	7.75	7.21	-0.94	32	52	9.74	15.17
7-10-86	9:09	-0.52	8.93	8.96	9.01	9.54	8.38	46	44	15.47	16.92
7-10-86	9:18	8.13	9.01	9.01	9.26	-0.01	8.41	46	44	14.97	16.94
7-10-86	9:28	6.9	7.82	7.86	8.06	8.43	7.22	48	44	15.32	-1.84
7-10-86	10:17	6.96	7.93	7.82	7.99	8.36	7.17	48	44	15.75	16.12
7-10-86	10:36	7.26	8.22	7.99	8.27	8.58	7.36	46	44	14.44	16.28
7-10-86	11:01	7.11	8.04	8.11	8.59	8.77	7.55	48	44	14.56	16.23
7-10-86	11:12	8.41	9.35	9.49	-0.21	10.01	8.81	46	42	14.06	16.33
7-10-86	1:06	8.04	8.94	9.06	9.51	-0.05	8.58	46	42	15.56	16.35

ROUGE STEEL COMPANY
PUSHING SHED BAGHOUSE STACK
"C" COKE OVEN BATTERY
EMISSION COMPLIANCE TEST

TEST NO. 1
JULY 8, 1986

PUSH NO.	OVEN NO.	PUSH TIME	CHARGE TIME	COKING TIME	CHARGE WEIGHT (LBS)
1	B-8	0900	1427	18:33	33,900
2	C-8	0918	1459	18:19	33,500
3	A-10	0954	1508	18:46	33,560
4	B-10	1018	1628	17:50	33,040
5	C-10	1028	1638	17:50	33,700
6	A-12	1038	1651	17:47	33,740
7	B-12	1048	1705	17:43	33,520
8	C-12	1056	1729	17:29	33,680
9	A-14	1108	1735	17:33	33,800
10	B-14	1204	1756	18:08	34,260
11	C-14	1217	1812	17:65	33,580
12	A-16	1253	1826	18:27	34,840
13	B-16	1302	1842	18:20	34,840
14	C-16	1312	1855	18:17	34,620
15	A-18	1323	1909	18:14	34,980
16	B-18	1333	1920	18:13	34,780

ROUGE STEEL COMPANY
PUSHING SHED BAGHOUSE STACK
"C" COKE OVEN BATTERY
EMISSION COMPLIANCE TEST

TEST No. 2
JULY 9, 1986

	PUSH NO.	OVEN NO.	PUSH TIME	JULY 8, 1986 CHARGE TIME	COKING TIME	CHARGE WEIGHT
:800	1	B-20	0821	1513	17:08	34540
:815	2	A-1	0834	1521	17:13	34,420
:830	3	B-1	0846	1621	16:25	34,860
:845	4	C-1	0856	1632	16:24	34,780
:900	5	A-3	0907	1644	16:23	34,840
:915	6	B-3	0918	1705	16:13	34,760
:945	7	C-3	0959	1720	16:39	35,060
:0	8	A-5	10:14	1731	16:43	34,920
:015	9	B-5	10:31	1745	16:46	34,940
:030	10	C-5	10:46	1801	16:45	35,570
:45	11	A-7	10:57	1812	16:45	34,860
:00	12	B-7	11:12	1836	16:36	35,020
:15	13	C-7	11:25	1846	16:39	35,000
~~:200~~	~~14~~	~~A-9~~	—	—		—
:215	~~15~~ 14	B-9	12:30	1919	17:11	34,600
:230	~~16~~ 15	C-9	12:44	1928	17:16	35,080
:245	16	A-11	12:48	2017	16:31	35,380

ROUGE STEEL COMPANY
PUSHING SHED BAGHOUSE STACK
"C" COKE OVEN BATTERY
EMISSION COMPLIANCE TEST

TEST No 3
JULY 10, 1986

PUSH NO.	OVEN NO.	PUSH TIME	JULY 9, 1986 CHARGE TIME	COKING TIME	CHARGE WEIGHT
1	A-15	0825	1520	17:05	34,480
2	B-15	0835	1528	17:07	34,680
3	C-15	0848	1625	16:23	34,960
4	A-17	0909	1636	16:33	34,460
5	B-17	0918	1648	16:30	34,800
6	C-17	0929	1703	16:26	34,540
7	A-19	0955	1713	16:42	34,260
8	B-19	1009	1728	16:41	34,720
9	C-19	1023	1742	16:41	34,500
10	A 21	1037	1759	16:38	34,820
11	B-21	1051	1813	16:38	34,620
12	A-2	1111	1827	16:44	34,540
13	B-2	1132	1841	16:51	34,140
14	A-4	1240	1913	17:27	33,960
15	B-4	1255	1926	17:29	34,220
16	C-4	1309	2020	16:49	33,820

APPENDIX F

LABORATORY DATA SHEETS

ROUGE STEEL COMPANY
"C" PUSHING SHED BAGHOUSE STACK
PARTICULATE COMPLIANCE TEST
July 8-10, 1986

TEST NO.	FILTER ORDER	SAMPLE ID	INITIAL WEIGHT (GM) 1	2	AVG	FINAL WEIGHT (GM) 1	2	AVG	NET GAIN (GMS)
1	D	FILTER	2.0007	2.0008	2.0008	2.0017	2.0018	2.0018	0.0010
2	E		1.9780	1.9783	1.9782	1.9809	1.9809	1.9809	0.0027
3	F		1.9866	1.9868	1.9867	1.9884	1.9886	1.9885	0.0018
1	9	NOZZLE PROBE	125.1646	125.1648	125.1647	125.1886	125.1886	125.1886	0.0239
2	16		139.8615	139.8617	139.8616	139.8837	139.8837	139.8837	0.0221
3	34		116.0185	116.0185	116.0185	116.0369	116.0371	116.0370	0.0185
ALL	35	ACETONE	123.5492	123.5490	123.5491	123.5491	123.5491	123.5491	0.0000

APPENDIX G

SAMPLE CALCULATIONS

SAMPLE CALCULATIONS

GAS FLOW ANALYSIS

TEST NUMBER 1

MEASURED DATA

STACK DIAMETER	DS	108.0	IN
STACK GAS TEMPERATURE	TS	144	DEG F
STACK STATIC PRESSURE	PSP	-0.29	IN H2O
BAROMETRIC PRESSURE	PBAR	29.43	IN HG
PITOT TUBE COEFFICIENT	CP	0.78	
AVE. SQRT. OF VELOCITY PRESS.	DELPV	0.765	IN H2O^.5
METERED SAMPLE VOLUME	VM	23.414	ACT CU FT
METER CORRECTION FACTOR	DGMCF	1.0020	
AVERAGE METER TEMPERATURE	TM	82.6	DEG F
AVERAGE ORIFICE PRESSURE DROP	DELH	1.85	IN H2O
VOLUME OF H20 CONDENSATE	VI	9.0	ML
WEIGHT OF H20 ADSORBED	VSG	4.8	GRAMS
MOLECULAR WT. OF DRY EX. GAS	MWD	29.00	LB/LB-MOLE

SAMPLE CALCULATIONS

CORRECTED VOLUME OF GAS THROUGH METER - STANDARD CONDITIONS VMSTD

VMSTD = 17.647 * VM * (PBAR + DELH/13.6)/(TM + 460) * DGMCF
VMSTD = 17.647 * 23.414 * (29.43 + 1.85/13.6)/(82.6+460)*1.0020
VMSTD = 22.559 CU FT

VOLUME OF WATER VAPOR CONDENSED - STANDARD CONDITIONS VWSTD

VWSTD = .0472 * (VI + VSG)
VWSTD = .0472 * (9.0 + 4.8)
VWSTD = 0.651 CU FT

TOTAL SAMPLE VOLUME (CORRECTED) AT STANDARD CONDITIONS VTSTD

VTSTD = VMSTD + VWSTD
VTSTD = 22.559 + 0.651
VTSTD = 23.210 CU FT

PERCENT MOISTURE IN EXHAUST GAS %M

%M = 100 * VWSTD / VTSTD
%M = 100 * 0.651/ 23.210
%M = 2.8 %

GAS FLOW CALCULATIONS

MOLECULAR WEIGHT OF WET EXHAUST GAS — MWW

```
MWW = (MWD/100) * (100-%M) + 0.18 * %M
MWW = (29.00/100 ) * (100 - 2.8) + 0.18 *  2.8
MWW = 28.69  LB/LB-MOLE
```

STACK GAS PRESSURE — PS

```
PS = PBAR + (PSP / 13.6)
PS = 29.43 + (-.29 / 13.6)
PS = 29.41  IN HG
```

STACK GAS VELOCITY AT STACK CONDITIONS — VS

```
VS = 5128.8 * CP * DELPV * SQRT((TS + 460)/(PS * MWW))
VS = 5128.8 * 0.78 * 0.765*SQRT(( 144+460)/(29.41 * 28.69))
VS = 2591  FT/MIN
```

STACK GAS VELOCITY AT STANDARD CONDITIONS — VSTD

```
VSTD = 17.647 * VS * PS / ( TS + 460 )
VSTD = 17.647*  2591 * 29.41/( ( 144 + 460 )
VSTD = 2224  FT/MIN
```

STACK AREA - ROUND — AS

```
AS = PI * (DS^2)/4/12^2
AS = 3.1417 *( 108^2)/4/144
AS =  63.62  SQ FT
```

STACK GAS FLOW AT STACK CONDITIONS — QS

```
QS = VS * AS
QS =   2591 *  63.62
QS =   164,820  ACFM
```

STACK GAS FLOW AT WET STANDARD CONDITIONS — QWSTD

```
QWSTD = VSTD * AS
QWSTD =  2224 *  63.62
QWSTD =   141,516  WSCFM
```

STACK GAS FLOW AT DRY STANDARD CONDITIONS — QDSTD

```
QDSTD = QWSTD * (1 - (%M/100))
QDSTD =   141,516 * (1 -  2.81/100))
QDSTD =   137,545  DSCFM
```

SAMPLE CALCULATIONS

PARTICULATE ANALYSIS

TEST NUMBER 1

MEASURED DATA

METERED SAMPLE VOLUME	VM	23.414	ACT CU FT
METER CORRECTION FACTOR	DGMCF	1.0020	
AVERAGE METER TEMPERATURE	TM	82.6	DEG F
AVERAGE ORIFICE PRESSURE DROP	DELH	1.85	IN H2O
VOLUME OF H2O CONDENSATE	VI	9.0	ML
WEIGHT OF H2O ADSORBED	VSG	4.8	GRAMS
NOZZLE DIAMETER	DN	0.2500	IN
TOTAL SAMPLE TIME	THETA	31.	MIN
WEIGHT OF PROBE CATCH	WPROBE	0.0239	GRAMS
WEIGHT OF FILTER CATCH	WF	0.0010	GRAMS
WEIGHT OF COAL CHARGED	COAL	544,340	LB
COAL TO COKE CONVERSION	CONV	0.75	

SAMPLE CALCULATIONS

CORRECTED VOLUME OF GAS THROUGH METER - STANDARD CONDITIONS VMSTD

VMSTD = 17.647 * VM * (PBAR + DELH/13.6)/(TM + 460) * DGMCF
VMSTD = 17.647 * 23.414 * (29.43 + 1.85/13.6)/(82.6+460)*1.0020
VMSTD = 22.559 CU FT

VOLUME OF WATER VAPOR CONDENSED - STANDARD CONDITIONS VWSTD

VWSTD = .0472 * (VI + VSG)
VWSTD = .0472 * (9.0 + 4.8)
VWSTD = 0.651 CU FT

TOTAL SAMPLE VOLUME (CORRECTED) AT STANDARD CONDITIONS VTSTD

VTSTD = VMSTD + VWSTD
VTSTD = 22.559 + 0.651
VTSTD = 23.210 CU FT

NOZZLE AREA AN

AN = PI * (DN^2)/4/12^2
AN = 3.1417 * (0.2500^2)/4/144
AN = 0.0003409 SQ FT

PARTICULATE CALCULATIONS

ISOKINETIC RATIO — I

I = 100 * VTSTD / (THETA * AN * VSTD)
I = 100 * 23.210 / (31 * 0.000341 * 2224)
I = 97.5 %

TOTAL WEIGHT OF PARTICULATE MATTER COLLECTED — WPT

WPT = WPROBE + WF
WPT = 0.0239 + 0.0010
WPT = 0.0249 GRAMS

PARTICULATE CONCENTRATION AT STACK CONDITIONS — CSTK

CSTK = 15.43 * 17.647 * PS * WPT/(VSTD * (TS+460))
CSTK = 15.43 * 17.647 * 29.41 * 0.0249 /(2224 * (144 + 460))
CSTK = 0.0142 GR/ACF

PARTICULATE CONCENTRATION AT DRY STANDARD CONDITIONS — CDSTD

CDSTD = 15.43 * WPT / VMSTD
CDSTD = 15.43 * 0.0249/ 22.559
CDSTD = 0.0170 GR/DSCF

PARTICULATE CONCENTRATION AT WET STANDARD CONDITIONS — WCSTD

WCSTD = 15.43 * WPT / VTSTD
WCSTD = 15.43 * 0.025/ 23.210
WCSTD = 0.0166 GR/WSCF

PARTICULATE FLOW RATE — WR

WR = 0.132 * WPT * QWSTD / VTSTD
WR = 0.132 * 0.025 * 141,516 / 23.210
WR = 20.04 LB/HR

WEIGHT OF COKE PUSHED — COKE

COKE = CONV * COAL
COKE = 0.75 * 544,340
COKE = 408,255 LB

EMMISIONS PER TON OF COKE PUSHED — CTON

CTON = (2000/60) * WR * THETA / COKE
CTON = (2000/60) * 20.04 * 31 / 408,255
CTON = 0.0514 LB/TON 31 / 540,340

APPENDIX H

EQUIPMENT CALIBRATION

SSFCU METER BOX NO. 2 CALIBRATION DATA

DATE:6-4-86
INITIALS:DBW
BAR. PRESS.: 29.42

STD. METER NO.: 916592
BOX-METER NO.: 716581
NO. OF TRIALS: 9

TRIAL NO.	TIME MIN.	STANDARD METER DATA (CORR. FACTOR 1.0035) TEMP DG F	DFL P IN.H2O	START CU.FT.	FINISH CU.FT.	NET CU.FT.	VOL.STP SCF	CORR.VOL SCF
1	16.0	76.0	-0.230	502.362	508.762	6.400	6.196	6.217
2	14.0	76.0	-0.240	508.762	515.610	6.848	6.629	6.652
3	15.0	76.0	-0.270	515.610	524.128	8.518	8.245	8.274
4	15.0	76.0	-0.300	524.128	533.418	9.290	8.992	9.023
5	10.0	76.0	-0.330	533.418	540.220	6.802	6.583	6.606
6	10.0	76.0	-0.350	540.220	547.616	7.396	7.158	7.183
7	10.0	76.0	-0.380	547.616	555.523	7.907	7.652	7.678
8	5.0	76.0	-0.440	555.523	559.955	4.432	4.288	4.303
9	5.0	76.0	-0.510	559.955	564.782	4.827	4.670	4.686

TRIAL NO.	T-IN DG F	T-OUT DG F	DEL P IN.H2O	METER BOX DATA START CU.FT.	FINISH CU.FT.	STP VOL. SCF	DELTA H	CORR. DEL.H
1	78.3	76.3	0.500	42.373	48.804	6.224	1.79	1.80
2	83.7	80.7	0.750	48.804	55.747	6.664	1.78	1.79
3	88.0	83.0	1.000	55.747	64.412	8.274	1.76	1.76
4	91.7	86.0	1.250	64.412	73.914	9.024	1.84	1.84
5	93.3	88.0	1.500	73.914	80.871	6.590	1.84	1.83
6	94.0	89.7	1.750	80.871	88.437	7.157	1.81	1.80
7	95.0	89.0	2.000	88.437	96.524	7.653	1.81	1.80
8	96.0	90.0	2.500	96.524	101.043	4.276	1.81	1.79
9	96.3	90.7	3.000	101.043	105.965	4.660	1.83	1.81

AVERAGE METER CORRECTION FACTOR: 1.0020
AVERAGE CORRECTED CALIBRATION CONSTANT (DELTA H): 1.80

CALIBRATION EQUATIONS:

CORRECTED METER VOLUME (SCF)=
(CU.FT.)*(528/(METER TEMP + 460))*((PBAR+(DELTA P/13.6))/29.92)

CALIBRATION CONSTANT (DELTA H)=
0.03175*DELTA P*PBAR/(METER TEMP OUT+460)*
(((METER TEMP AVE+460)*TIME/(CU.FT.*(PBAR+DELTA P/13.6)))**2.0)

***FOOTNOTE: STANDARD CONDITIONS (STP):
29.92 IN. HG. AND 528 DEGREES RANKINE.***

6-3-86
ck DSW

ASTM °F	Dane Box #1 Probe #1 °F	Dane Box #2 Probe #2 °F
308.0	308	308
295.5	296	296
279.0	279	279
270.0	270	270
251.0	251	251
244.0	245	244
234.5	235	235
222.5	223	223
205.8	206	205
174.0	175	174
163.6	164	164
152.2	153	152
146.2	147	146
138.0	139	138
131.2	132	130
126.2	127	125
117.4	118	117
109.2	110	109
101.2	102	100
91.1	92	90
78.8	79	77
65.8	66	64
51.0	51	50
40.6	40	38
33.2	50 33	31

FORD MOTOR COMPANY
STATIONARY SOURCE ENVIRONMENTAL CONTROL
FORD WIND TUNNEL - PITOT TUBE CALIBRATION

INITIALS Jm PROBE ID. 10' PROBE DATE 6-24-86

FAN SPEED	STD PITOT ΔP	STD PITOT $\sqrt{\Delta P}$	"S" TYPE PITOT NOZZLE SIZE	"S" TYPE PITOT ΔP	"S" TYPE PITOT $\sqrt{\Delta P}$	$C_p = \frac{\sqrt{\Delta P_{std}}}{\sqrt{\Delta P_{"S"}}}$	REMARKS
LOW	.22	.469	7/16	.36	.600	.78	
	.22	.469	7/16	.37	.608	.77	
	.22	.469	7/16	.37	.608	.77	
	.215	.464	1/2	.355	.596	.78	
	.21	.458	1/2	.36	.600	.76	
	.215	.464	1/2	.36	.600	.77	
	.22	.469	5/8	.365	.604	.78	
	.215	.464	5/8	.37	.608	.76	
	.215	.464	5/8	.365	.604	.77	
MEDIUM	.385	.620	7/16	.63	.794	.78	
	.38	.616	7/16	.63	.794	.78	
	.375	.612	7/16	.625	.791	.77	
	.38	.616	1/2	.62	.787	.78	
	.38	.616	1/2	.615	.784	.79	
	.375	.612	1/2	.615	.784	.78	
	.38	.616	5/8	.62	.787	.78	
	.38	.616	5/8	.62	.787	.78	
	.375	.612	5/8	.615	.784	.78	
HIGH	.565	.752	7/16	.93	.964	.78	
	.57	.755	7/16	.925	.962	.78	
	.57	.755	7/16	.93	.964	.78	
	.56	.748	1/2	.925	.962	.78	
	.565	.752	1/2	.93	.964	.78	
	.565	.752	1/2	.925	.962	.78	
	.565	.752	5/8	.94	.970	.78	
	.56	.748	5/8	.935	.967	.77	
	.565	.752	5/8	.935	.967	.80	

FAN SPEED	C_p NOZZLE SIZE 7/16	1/2	5/8	COMPOSITE C_p
LOW	.77	.77	.77	
MEDIUM	.78	.78	.78	
HIGH	.78	.78	.78	
AVERAGE	.78	.78	.78	.78

APPENDIX I

OPACITY DATA SHEETS

Visible Emissions Evaluation Form

(USEPA REGION V)

1

FACILITY: C-Bag House - Battery Shed

DATE: 7/8/86

OBSERVER: Dawson

START: 9:18 am ✓ pm

FINISH: 9:57 am ✓ pm

Source:

Observation Point: South of C-Baghouse stack, next to oil storage area

distance from; 100 Yds

direction from;

source height;

wind direction SE

wind speed 2-5 mph

sky condition Over Cast

background

amb. temp. °F

rel. hum. %

color of emissions

other;

Remarks:

MIN	0	15	30	45	REMARKS	MIN	0	15	30	45	REMARKS
0						30					
1						31					
2						32					
3						33					
4						34					
5						35					
6						36					
7						37					
8						38					
9						39					
10						40					
11						41					
12						42					
13						43					
14						44					
15						45					
16						46					
17						47					
18	0	0	0	0	0 C8	48					
19	0	0	0	0		49					
20	0					50					
21						51					
22						52					
23						53					
24						54					
25						55	0	0	0	0	R10
26						56	5	—	—	0	
27	53					57	0	0			
28						58					
29						59					

Observers Signature _____ Last Cert. Date _____

Visible Emissions Evaluation Form

(USEPA REGION V)

2

FACILITY: C-Bag House & Shed

DATE: 7/8/86

OBSERVER: DAWSON

START: 10 14 am ✓ pm

FINISH: _____ am ___ pm

Source: _____

Observation Point: South of stack - across from old Coke lab.

distance from: 100 Yds

direction from: _____

source height: _____

wind direction SE

wind speed 5 mph

sky condition Overcast

background _____

amb. temp. °F 85

rel. hum. % _____

color of emissions _____

other: _____

Remarks: _____

MIN.	0	15	30	45	REMARKS	MIN.	0	15	30	45	REMARKS
0						30	0	0	0	0	
1						31					
2						32					
3						33					
4						34					
5						35					
6						36					
7						37					
8						38					
9						39	0	0	0	5	5 B-12
10						40	5	0	0	0	
11						41					
12						42					
13						43					
14						44					
15						45					
16						46					
17						47					
18						48					
19	0	0	0	5		49					
20	0	0	0	0	B-10	50	0	0	0	0	0 B-12
21						51	0	0	0	0	0
22						52					
23						53					
24						54					
25						55					
26						56					
27	54					57					
28						58	0	0	0	0	0 C-12
29	0	0	0	0	5 C-10	59	0	0	0	0	

Observers Signature _____ Last Cert. Date _____

Visible Emissions Evaluation Form

(USEPA REGION V)

3

FACILITY: C-Baghouse Exhaust

DATE: 7/8/86

OBSERVER: D. Auston

START: 11:12 am ✓ pm

FINISH: _____ am pm

Source: _____

Observation Point: _____

distance from; _____

direction from; _____

source height; _____

wind direction .....

wind speed .....

sky condition .....

background .....

amb. temp. °F .....

rel. hum. % .....

color of emissions .....

other; .....

Remarks; .....

MIN.	0	15	30	45	REMARKS	MIN.	0	15	30	45	REMARKS
0						30					
1						31					
2						32					
3						33					
4						34					
5						35					
6						36					
7						37					
8					U-10	38					
9					and A-1	39					
10	0	0	5	0	A-11	40					
11	0	0	0	0		41					
12						42					
13						43					
14						44					
15						45					
16						46					
17						47					
18						48					
19						49					
20						50					
21						51					
22						52					
23						53					
24						54					
25						55					
26						56					
27	55					57					
28						58					
29						59					

Observers Signature _____ Last Cert. Date _____

Visible Emissions Evaluation Form

(USEPA REGION V)

W.C.A.P.C.D. CERTIFICATE - OF - OPERATION STACK TEST

FACILITY: "C" COKE BATTERY

DATE: 7-8-86

OBSERVER: D.A. O'CONNOR

START: 12:00 am ___ pm X

FINISH: 12:59 am ___ pm X

Source: PUSH - CONTROL BAGHOUSE STACK

Observation Point: WEST SIDE OF COKE OVEN LAB

distance from: 90 m

direction from: SOUTH

source height: ___

wind direction: SE

wind speed: 5 MPH

sky condition: OVERCAST

background: GREY SKY

amb. temp. °F: 75

rel. hum. %: ___

color of emissions: ___

other: ___

Remarks: ___

MIN	0	15	30	45	REMARKS	MIN	0	15	30	45	REMARKS
0					12:00	30					
1						31					
2						32					
3						33					
4						34					
5			0	0	[redacted]	35					
6	0	0	0	0		36					
7	0	0			CB-14	37					
8						38					
9						39					
10						40					
11						41					
12						42					
13						43					
14						44					
15						45					
16						46					
17						47					
18				0	CC-14	48					
19	0	0	0	5		49					
20	0	0	0			50					
21						51					
22						52					
23						53					
24						54	0	0	0	0	CA-16
25						55	0	0	0	0	
26						56					
27	56					57					
28						58					
29						59					

Observers Signature: D.A. O'Connor Last Cert. Date: 4-86

Visible Emissions Evaluation Form
(USEPA REGION V)

FACILITY: "C" COKE BATTERY

DATE: 7-8-86

OBSERVER: D. A. O'CONNOR

START: 1:00 am ___ pm X

FINISH: 1:59 am ___ pm X

Source: PUSH-CONTROL BAGHOUSE STACK

Observation Point: WEST SIDE OF COKE OVEN LAB

distance from; 90 m

direction from; SOUTH

source height; ___

wind direction SE

wind speed 5 MPH

sky condition OVERCAST

background GREY SKY

amb. temp. °F 75°

rel. hum. %

color of emissions

other; ___

Remarks; ___

MIN	0	15	30	45	REMARKS	MIN	0	15	30	45	REMARKS
0					1:00	30					
1						31					
2						32					
3				0	CB-16	33				0	CB-18
4	0	0	0	0		34	0	0	0	0	
5	0	0	0			35	0	0	0		
6						36					
7						37					
8						38					
9						39					
10						40					
11						41					
12				0	CC-16	42					
13	0	0	0	0		43					
14	0	0	0			44					
15						45					
16						46					
17						47					
18						48					
19						49					
20						50					
21						51					
22						52					
23						53					
24			0	0	CA-18	54					
25	5	5	0	0		55					
26	0	0				56					
27	7					57					
28						58					
29						59					

Observers Signature D.A. O'Connor Last Cert. Date 4-86

TCA
Dave

Visible Emissions Evaluation Form

(USEPA REGION V)

1

FACILITY: C Battery Roughouse - Shed

DATE: 7/9/86

OBSERVER: Dawson

START: 8:37 am ✓ pm

FINISH: 9:18 am ✓ pm

Source:

Observation Point: South of C battery westerly all Coke Oven Lab

distance from: 100 Yds

direction from:

source height: 60 ft

wind direction SE

wind speed 5 mph

sky condition Cloudy

background

amb. temp. °F 80°

rel. hum. % 60%

color of emissions None

other:

Remarks:

MIN.	0	15	30	45	REMARKS	MIN.	0	15	30	45	REMARKS
0						30					1st period Ended B-10
1						31					
2						32					
3						33					
4						34	Ø	Ø	Ø	—	(2)
5						35	Ø	Ø	Ø	Ø	A-1
6						36					
7						37					
8	Ø	Ø	Ø	Ø	(6) A-3	38					
9	Ø	Ø	Ø	Ø		39					
10						40					
11						41					
12						42					
13						43					
14						44					
15						45					
16						46	Ø	Ø	Ø	Ø	(3) B-1
17						47	Ø	Ø	Ø	Ø	
18	Ø	Ø	Ø	Ø	(6) B-3	48					
19	Ø	Ø	Ø	Ø		49					
20						50					
21						51					
22						52					
23						53					
24						54					
25						55	Ø	Ø	Ø	Ø	(4) C-1
26						56	Ø	Ø	Ø	Ø	
27	58					57					
28						58					
29						59					

Observers Signature Robert J. Dawson Last Cert. Date April 86

Visible Emissions Evaluation Form

(USEPA REGION V)

Page 2

FACILITY: C-Battery Baghouse Shed

DATE: 7/9/86

OBSERVER: Dawson

START: 959 am ✓ pm

FINISH: 1014 am ✓ pm

Source:

Observation Point: South of "C" Battery & West of old Coke Ovens Grab

distance from: 100 Yds

direction from:

source height: 60 ft

wind direction SE

wind speed 5 mph

sky condition Cloudy, Overcast

background

amb. temp. °F 70°

rel. hum. % 60%

color of emissions

other:

Remarks:

MIN.	0	15	30	45	REMARKS	MIN.	0	15	30	45	REMARKS
0	Ø	Ø	Ø	Ø		30					
1						31					
2						32					
3						33					
4						34					
5						35					
6						36					
7						37					
8						38					
9						39					
10						40					
11						41					
12					10:13 AM	42					
13	Ø	Ø	Ø	Ø	8 AJ	43					
14	Ø	Ø	Ø	Ø		44					
15						45					
16						46					
17						47					
18						48					
19						49					
20						50					
21						51					
22						52					
23						53					
24						54					
25						55					
26						56					
27	59					57					
28						58					
29						59	Ø	Ø	Ø	Ø	Ø C-3

Observers Signature Ralph Dawson Last Cert. Date April 86

Stuti

A-7

Visible Emissions Evaluation Form

(USEPA REGION V)

page 3

FACILITY: "C" - Battery - Bayhouse Exhaust

DATE: 7/4/86

OBSERVER: DAWSON

START: 10 31 am ✓ pm

FINISH: 11 26 am ✓ pm

Source:

Observation Point: South of "C" Bayhouse towards old Coke Lab

distance from: 100 yds

direction from:

source height:

wind direction SW

wind speed 5 mph

sky condition Cloudy & hazy

background

amb. temp. °F 70°F

rel. hum. % 60%

color of emissions

other:

Remarks:

MIN.	0	15	30	45	REMARKS	MIN.	0	15	30	45	REMARKS
0						30					2nd Pt
1						31	0	0	0	0	A-5 (2)
2						32	0	0	0	0	
3						33					
4						34					
5						35					
6						36					
7						37					
8						38					
9						39					
10						40					
11					11:12 Am	41					
12						42					
13	0	0	0	0	(4) B-7	43					
14	0	0	0	0		44					
15						45					
16						46	0	0	0	0	(2) C-5
17						47	0	0	0	0	
18						48					
19						49					
20						50					
21						51					
22						52					
23						53					
24						54					
25	0	0	0	0	(5) C-7	55					
26	0	0	0	0		56					
27						57	0	0	0	0	(3) A-7
28						58	—	0	0	0	
29						59					

Observers Signature [signature] Last Cert. Date April 86

Visible Emissions Evaluation Form

(USEPA REGION VI)

Page 4

FACILITY: "C" Battery Baghouse Stack

DATE: 7/9/84

OBSERVER: DAWSON

START: 12:00 am pm

FINISH: 12:59 am pm

Source:

Observation Point: South of "C" Baghouse & just west of Oil Coke Lab

distance from: 100 yds

direction from:

source height:

wind direction SE

wind speed 5 mph

sky condition Cloudy/Overcast

background

amb. temp. °F 75

rel. hum. % 60%

color of emissions

other:

Remarks:

MIN.	0	15	30	45	REMARKS	MIN.	0	15	30	45	REMARKS
0						30	Ø	Ø	5	0	6 B-4
1						31	Ø	Ø	Ø	Ø	
2						32					
3						33					
4						34					
5						35					
6						36					
7						37					
8						38					
9						39					
10						40					
11						41					
12						42					
13						43					
14						44	Ø	Ø	Ø	Ø	5 C-4
15						45	Ø	Ø	Ø	Ø	
16						46					
17						47					
18						48					
19						49					
20						50					
21						51					
22						52					
23						53					
24						54					
25						55					
26						56					
27	61					57					
28						58	Ø	Ø	Ø	Ø	8 A-13
29						59	Ø	Ø	Ø	Ø	

Ind Port

*

Observers Signature Rudolph Dawson Last Cert. Date April 86

Visible Emissions Evaluation Form

(USEPA REGION V)

FACILITY: "C" COKE BATTERY

DATE: 7-10-86

OBSERVER: D.A. O'CONNOR

START: 8:00 am X pm

FINISH: 8:59 am X pm

Source: "C" PUSH - CONTROL BAGHOUSE STACK

Observation Point: WEST OF OLD COKE OVEN LAB

distance from: 95m

direction from: S

source height:

wind direction NW

wind speed 0-5 MPH

sky condition CLEAR + BLUE

background SKY

amb. temp. °F 75°

rel. hum. %

color of emissions

other:

Remarks:

MIN	0	15	30	45	REMARKS	MIN	0	15	30	45	REMARKS
0					8:00	30					
1						31				0	CB-15
2						32	0	0	0	0	
3						33	0	0	0		
4						34					
5						35					
6						36					
7						37					
8						38					
9						39					
10						40					
11						41					
12						42					
13						43					
14						44		0	0	0	CC-15
15						45	0	0	0	0	
16						46	0				
17						47					
18						48					
19						49					
20						50					
21				0	CA-15	51					
22	0	5	5	0		52					
23	0	0	0			53					
24						54					
25						55					
26						56					
27						57					
28						58					
29						59					

Observers Signature D.A. O'Connor Last Cert. Date 4-84