Note: This is a reference cited in *AP 42, Compilation of Air Pollutant Emission Factors, Volume I Stationary Point and Area Sources.* AP42 is located on the EPA web site at www.epa.gov/ttn/chief/ap42/

The file name refers to the reference number, the AP42 chapter and section. The file name "ref02_c01s02.pdf" would mean the reference is from AP42 chapter 1 section 2. The reference may be from a previous version of the section and no longer cited. The primary source should always be checked.

United States Environmental Protection Agency

Office Of Air Quality Planning And Standards
Research Triangle Park, NC 27711

EPA-453/R-01-006
February 2001
FINAL REPORT

Air

National Emission Standards for Hazardous Air Pollutants (NESHAP) for Coke Ovens: Pushing, Quenching, and Battery Stacks - Background Information for Proposed Standards

Final Report

EPA-453/R-01-006

National Emission Standards for Hazardous Air Pollutants (NESHAP) for Coke Ovens: Pushing, Quenching, and Battery Stacks - Background Information for Proposed Standards

U.S. Environmental Protection Agency
Office of Air Quality Planning and Standards
Metals Group, MD-13
Research Triangle Park, NC 27711

Prepared Under Contract By:

Research Triangle Institute
Center for Environmental Analysis
Research Triangle Park, NC 27711

February 2001

This report has been reviewed by the Emission Standards Division of the Office of Air Quality Planning and Standards of the United States Environmental Protection Agency and approved for publication. Mention of trade names or commercial products is not intended to constitute endorsement or recommendation for use. Copies of this report are available through the Library Services (MD-35), U.S. Environmental Protection Agency, Research Triangle Park, NC 27711, or from the National Technical Information Services 5285 Port Royal Road, Springfield, VA 22161.

TABLE OF CONTENTS

1. INTRODUCTION 1-1
   1.1 STATUTORY BASIS 1-1
   1.2 SELECTION OF SOURCE CATEGORY 1-2

2. OVERVIEW OF THE COKEMAKING INDUSTRY 2-1
   2.1 INDUSTRY DESCRIPTION 2-1
   2.2 PROCESS DESCRIPTION 2-5
      2.2.1 Coal Preparation and Charging 2-6
      2.2.2 Thermal Distillation/Pushing/Quenching 2-7
      2.2.3 By-product Recovery Process 2-9
      2.2.4 Non-recovery Process 2-11
   2.3 SUMMARY OF CURRENT REGULATIONS 2-13
      2.3.1 Pushing Regulations -- Fugitive Emissions 2-13
      2.3.2 Regulations for Pushing Control Devices 2-14
      2.3.3 Quenching Regulations 2-17
      2.3.4 Battery Stack Regulations 2-17
   2.4 REFERENCES 2-21

3. EMISSION POINTS AND CONTROL TECHNIQUES 3-1
   3.1 PUSHING 3-2
      3.1.1 Systematic Operation and Maintenance 3-2
      3.1.2 Capture and Control Systems 3-3
      3.1.3 Moveable Hood / Fixed Duct 3-4
      3.1.4 Coke Side Shed 3-8
      3.1.5 Mobile Scrubber Car 3-9
   3.2 QUENCHING 3-11
      3.2.1 Overview of Wet Quenching 3-11
      3.2.2 Overview of Dry Quenching 3-13
      3.2.3 Baffles 3-14
      3.2.4 Water Quality and Coke Quality 3-15
      3.2.5 Offset Quench Towers / Deflectors 3-15
      3.2.6 Factors Affecting Performance 3-16
   3.3 BATTERY STACKS 3-16
      3.3.1 Continuous Opacity Monitors 3-18
      3.3.2 Systematic Operation and Maintenance 3-19
   3.4 REFERENCES 3-26

4. MODEL BATTERIES 4-1
   4.1 APPROACH 4-1
   4.2 BATTERY INFORMATION 4-1
   4.3 MODEL DEVELOPMENT 4-2

4.4 REFERENCES 4-2

5. ENVIRONMENTAL IMPACTS 5-1
5.1 DERIVATION OF EMISSION FACTORS FOR PUSHING 5-1
5.1.1 Derivation of an Emission Factor from the Bethlehem Steel Test Results 5-4
5.1.2 Derivation of an Emission Factor from the ABC Coke Test Results . . 5-5
5.1.3 Frequency of Green Pushes 5-7
5.1.4 Estimates of Nationwide Emissions 5-8
5.2 EMISSIONS FROM BATTERY STACKS 5-10
5.2.1 Relationship Between Opacity and Concentration 5-10
5.2.2 Adjustment for Volumetric Flow Rate 5-14
5.2.3 Extrapolation to Other Batteries 5-14
5.3 EMISSIONS FROM QUENCHING 5-18
5.3.1 HAP Data for Quenching 5-18
5.3.2 Extrapolation to Other Batteries 5-20
5.4 OTHER ENVIRONMENTAL IMPACTS 5-22
5.5 REFERENCES 5-22

6. COSTS 6-1
6.1 APPROACH 6-1
6.2 COSTS FOR MACT PERFORMANCE 6-1
6.3 COSTS FOR MODEL BATTERIES 6-4
6.4 DEVELOPMENT OF COSTS FOR THE MODEL BATTERIES 6-5
6.5 ESTIMATES OF NATIONWIDE COSTS 6-8
6.6 REFERENCES 6-16

Appendix A Documentation for the MACT Floor A-1

Appendix B Opacity Data for Pushing - Average Per Push B-1

Appendix C COM Data - Daily Averages C-1

LIST OF ACRONYMS

acfm	Actual cubic foot per minute
BFG	Blast furnace gas
BSO	Benzene soluble organics
Btu	British thermal units
C	Centigrade
CAA	Clean Air Act
CDQ	Coke dry quenching
cm	Centimeter
CO	Carbon monoxide
COG	Coke oven gas
COMS	Continuous opacity monitoring system(s)
dscf	Dry standard cubic foot
EOM	Extractable organic matter
EPA	Environmental Protection Agency
F	Fahrenheit
ft	Foot
g	Gram
gal	Gallon
gr	Grain
hr	Hour
HAP	Hazardous air pollutant(s)
H_2O	Water
H_2S	Hydrogen sulfide
in	Inch
kg	Kilogram

KIDC	Kress Indirect Dry Cooling
L	Liter
lb	Pound
m	Meter
MACT	Maximum achievable control technology
Mg	Megagram
mg	Milligram
mm	Millimeter
MW	Megawatt
NESHAP	National emission standard for hazardous air pollutants
NO_x	Nitrogen oxide
PAH	Polynuclear aromatic hydrocarbons
PM	Particulate matter
POM	Polycyclic organic matter
ppm	Parts per million
scf	standard cubic foot
SO_2	Sulfur dioxide
TDS	Total dissolved solids
VOC	Volatile organic compound(s)

1. INTRODUCTION

This document summarizes the background information used in the development of MACT standards for the coke ovens: pushing, quenching, and battery stacks source category. All references cited in this document are available in EPA Docket A-2000-34. In addition, this document will be supplemented by technical memoranda that document steps in the standards development process not covered in this compilation of background information.

The remainder of this chapter provides a summary of the statutory basis for MACT standards and the selection of this source category for rulemaking. Chapter 2 provides an overview of the industry and cokemaking process. Emission points and emission control technologies and their performance are summarized in Chapter 3. Chapter 4 presents the determination of the MACT floor. Model plants (for use in estimating potential impacts) and options for emission control and monitoring are discussed in Chapter 5. Environmental and energy impacts are estimated for the model plants and for all plants nationwide in Chapter 6. The estimated costs for emission control and monitoring are given in Chapter 7. Appendices A, B, and C summarize the emissions data.

1.1 STATUTORY BASIS

Section 112 of the CAA as amended requires the EPA to develop NESHAP for the control of HAP from both new and existing major or area sources. The statute requires the standard to reflect the maximum achievable reduction in HAP emissions taking into consideration the cost of achieving the emission reduction, nonair quality health and environmental reduction, and energy requirements. This level of control is commonly referred to as MACT.

Emission reductions may be accomplished through application of measures, processes, methods, systems or techniques including, but not limited to: (1) reducing the volume of, or eliminating emissions of, HAP through process changes, substitution of materials, or other modifications, (2) enclosing systems or processes to eliminate emissions, (3) collecting, capturing, or treating HAP when released from a process, stack, storage or fugitive emissions point, (4) design, equipment, work practice, or operational standards (including requirements for

operator training or certification) as provided in subsection (h), or (5) a combination of the above [section 112(d)(2)].

1.2 SELECTION OF SOURCE CATEGORY

Section 112 specifically directs the EPA to develop a list of all major and area source categories as appropriate emitting one or more of the HAP listed in section 112(b). The EPA published an initial list of source categories on July 16, 1992 (57 FR 31576) and may amend the list at any time. A schedule for promulgation of standards for each source category was published on December 3, 1993 (58 FR 63941).

Coke ovens: pushing, quenching, and battery stacks is one of the 174 categories of sources listed. As defined in the EPA report, "Documentation for Developing the Initial Source Category List" (EPA-450/3-91-030), this category consists of plants engaged in the manufacturing of coke by the destructive distillation of coal. This source category includes, but is not limited to, the following process operations: (1) pushing, (2) quenching, and (3) battery stack (also known as the underfire or combustion stack).

This listing was based on the Administrator's determination that pushing, quenching, and battery stacks may reasonably be anticipated to emit several of the listed HAP in sufficient quantity to be designated as major sources. The EPA schedule for promulgation of the section 112 emission standards (58 FR 63941, December 3, 1993) requires MACT rules for the pushing, quenching, and battery stacks source category to be promulgated by November 15, 2000. If MACT standards for this source category are not promulgated by May 15, 2002 (18 months following the promulgation deadline), section 112(j) of the CAA requires State or local agencies with approved permit programs to issue permits or revise existing permits containing either an equivalent emission limitation or an alternative emission limitation for HAP control.

2. OVERVIEW OF THE COKEMAKING INDUSTRY

2.1 INDUSTRY DESCRIPTION

Coke is one of the basic materials used in blast furnaces for the conversion of iron ore into iron, most of which is subsequently processed into steel. The major portion (92% in 1998) of coke produced in the United States is used for this purpose.[1] Coke is also used by a number of other industries, namely iron foundries, nonferrous smelters, and chemical plants. Approximately 97% of the coke produced in the U.S. is produced at 23 plants that use the by-product, or slot oven process. This conversion of coal to coke is performed in long, narrow slot ovens which are designed to allow separation and recovery of the volatile by-products that evolve during the coking process. Approximately 3% of coke is produced at two plants that use a non-recovery process, where the resulting volatiles are not recovered as by-products but are used as fuel for coking.[2]

Between 1990 and 1995, raw steel production increased by 4 million tons in the U.S, yet coke consumption decreased by 3.6 million tons. This is primarily due to the increased use of supplemental fuels in blast furnaces such as granular coal, pulverized coal, and natural gas, all of which reduce the amount of coke required per ton of iron produced. All blast furnaces operating in North America now inject or co-inject supplemental fuels to increase productivity and decrease coke consumption.[3]

There has been a steady decline in the number of coke plants over the past several years for many reasons, including the increased use of supplemental fuels, a decline in the demand for iron and steel, and increased production of steel by mini-mills (electric arc furnaces that do not use coke). Table 2-1 compares the number of coke plants, batteries, and ovens in 1975 and 1998. Even with decreased coke consumption, the extensive reduction in operating coke plants has resulted in a coke deficit. As a result, the U.S. has had to rely more and more on foreign-produced coke. In 1995 the U.S. imported nearly 3.5 million tons of coke, primarily from Japan (53%) and China (40%). [4, 5]

New technology under development may decrease the demand for coke in the future. Research funded primarily by the U.S. Department of Energy is currently underway to develop

direct steelmaking technology that would not require the use of coke as a raw material. This technology is expected to involve the feeding of carbon-containing iron oxides into the top of a reactor, and the feeding of combustion oxygen into the bottom of the reactor to refine the charge directly into crude liquid steel.[6]

TABLE 2-1. COMPARISON OF U.S. COKE PRODUCERS IN 1975 AND 1998[1, 4]

Number of:	**1975**	**1998**
By-Product Coke Plants	62	23
Non-Recovery Coke Plants	0	2
Batteries	231	68
Ovens	13,324	3,828

The coke making industry consists of two sectors, *integrated* plants and *merchant* plants. Integrated plants are owned by or affiliated with iron- and steel-producing companies who produce furnace coke primarily for consumption in their own blast furnaces. In 1998 there were 14 integrated plants owned by nine integrated iron and steel companies. Integrated plants accounted for approximately 80% of total U.S. coke production in 1998. Independent merchant plants produce furnace and/or foundry coke for sale on the open market. There were 11 merchant plants in existence in 1998. Merchant plants accounted for about 20% of the total coke produced in the U.S in 1998. These firms sell most of their products to other firms engaged in blast furnace, foundry, and nonferrous smelting operations. Approximately 60% of the merchant coke produced in the U.S. is used in blast furnaces, and 40% is used in foundries or other applications. Information about U.S. coke plants is summarized in Tables 2-2 and 2-3.[1,2]

Although coke was produced in 11 States in 1998, 61% of the production capacity was in three States: Indiana, Pennsylvania, and Alabama. Indiana, with 5.6 million tons of potential output, had the highest potential output and accounted for 26% of U.S. coke capacity. Pennsylvania had the capacity to produce 5.3 million tons of coke, and Alabama could

TABLE 2-2. COKE PLANTS OPERATED BY INTEGRATED IRON AND STEEL PRODUCERS [1,4]

Plant	Battery	Number of ovens	Furnace Coke Production* (1,000 tons/yr)	Other Coke Production* (1,000 tons/yr)
1. Acme Steel, Chicago, IL	1	50	246.8	10
	2	50	246.8	10
2. AK Steel, Middletown, OH	3	76	410.0	0
3. AK Steel, Ashland, KY	3	76	355.4	0
	4	70	587.5	0
4. Bethlehem Steel, Burns Harbor, IN	1	82	814.0	40.4
	2	82	858.3	42.4
5. Bethlehem Steel, Lackawanna, NY	7	76	375.8	0
	8	76	371.9	0
6. Geneva Steel, Provo, UT	1	63	189.4	4.4
	2	63	115.3	2.7
	3	63	222.3	5.2
	4	63	173.0	4
7. Gulf States Steel, Gadsden, AL	2	65	208.4	0
	3	65	312.6	0
8. LTV Steel, Chicago, IL	2	60	590.2	0
9. LTV Steel, Warren, OH	4	85	543.2	0
10. National Steel, Ecorse, MI	5	85	908.7	0
11. National Steel, Granite City, IL	A	45	285.3	0
	B	45	285.4	0
12. US Steel, Clairton, PA	1	64	315.0	0
	2	64	315.0	0
	3	64	315.0	0
	7	62	320.0	0
	8	64	320.0	0
	9	64	320.0	0
	13	61	332.3	0
	14	61	332.3	0
	15	61	332.3	0
	19	87	537.0	0
	20	87	537.0	0
	B	75	878.3	0
13. US Steel, Gary, IN	2	57	640.0	0
	3	57	619.0	0
	5	77	269.5	0
	7	77	284.9	0
14. Wheeling-Pittsburgh, East Steubenville, WV	1	47	137.4	4
	2	47	137.4	4
	3	51	137.4	4
	8	79	837.2	24.3
Totals	40	2,646	16,017	155

* = production data from 1997-98

TABLE 2-3. COKE PLANTS OPERATED BY MERCHANT COKE PRODUCERS, 1998[1,4]

Plant	Battery	No. of ovens	Coke production (1,000 tons/yr)*		
			Blast furnace	Foundry	Other
1. ABC Coke, Tarrant, AL	1	78	0	536	0
	5	25	12	89	0
	6	29	14	103	0
2. Citizens Gas, Indianapolis, IN	E	47	0	89	16
	H	41	0	78	14
	1	72	173	201	64
3. Empire Coke, Holt, AL	1	40	0	95	0
	2	20	0	48	0
4. Erie Coke, Erie, PA	A	23	0	48	8
	B	35	0	74	12
5. Indiana Harbor Coke, East Chicago, IN**	A	67	325	0	0
(Non-recovery)	B	67	325	0	0
	C	67	325	0	0
	D	67	325	0	0
6. Jewell Coal and Coke, Vansant, VA	2D	18	90	0	0
(Non-recovery)	2E	27	135	0	0
	3B	26	130	0	0
	3C	36	180	0	0
	3F	17	85	0	0
	3G	18	90	0	0
7. Koppers, Monessen, PA	1B	37	237	0	0
	2	19	122	0	0
8. New Boston, Portsmouth, OH	2	70	318	0	5
9. Shenango, Pittsburgh, PA	1	56	354	0	0
10. Sloss Industries, Birmingham, AL	3	30	127	0	0
	4	30	127	0	0
	5	60	15	131	34
11. Tonawanda, Buffalo, NY	2	60	0	136	64
Total	28	1,182	3,509	1,628	216

* = production data from 1997-98

**= production at Indiana Harbor Coke is estimated

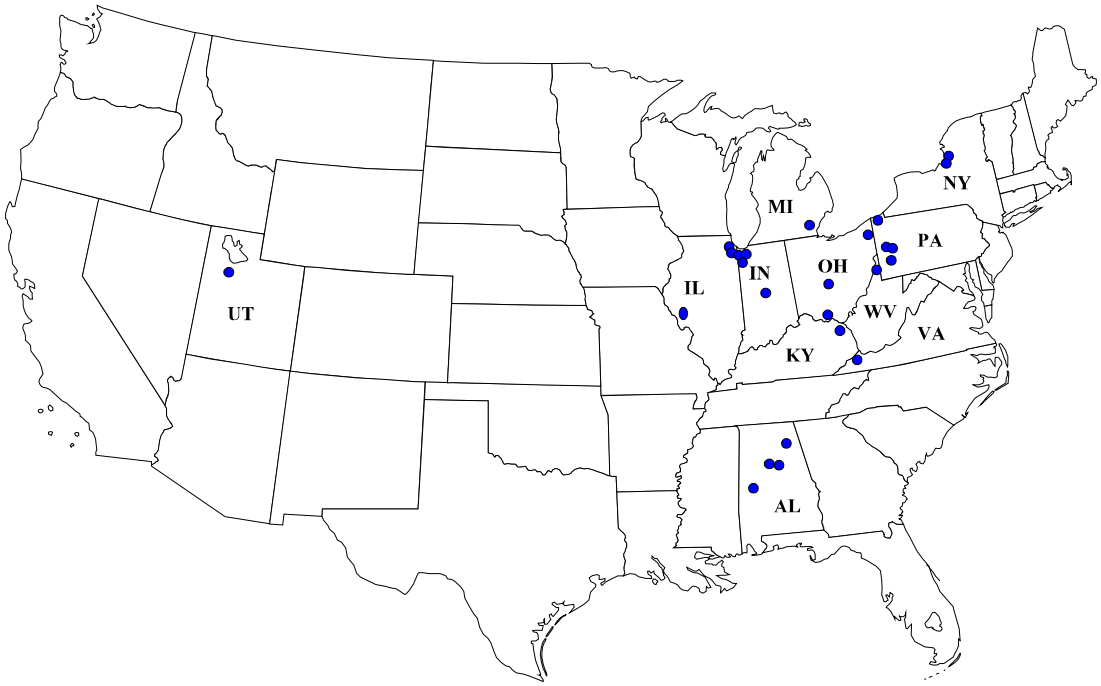

FIGURE 2-1. LOCATIONS OF U.S. COKE PLANTS

produce 2.1 million tons of coke.[1,5] The locations of all coke plants in the U.S. are presented in Figure 2-1.

The yield of coke from coal is typically about 70 %. This production does not include breeze, the undersize coke that results from the crushing and screening of the coke after it is removed from the oven. Because of its small size, breeze is not suitable for use in ferrous blast furnaces, but is used for other purposes such as the sintering of iron-bearing dust and fine ores and as boiler fuel.[2,4]

2.2 PROCESS DESCRIPTION

The majority of U.S. coke is produced with the by-product process; 23 of the 25 existing coke plants in 1998 used this process. The following discussion addresses the more common

by-product process first and then describes the non-recovery process and the major differences between the two processes that affect emissions.[4]

2.2.1 Coal Preparation and Charging

The coal that is charged to by-product coke ovens is usually a blend of two or more low, medium, or high volatile coals that are generally low in sulfur and ash. Blending is required to control the properties of the resulting coke, to optimize the quality and quantity of by-products, and to avoid the expansion exhibited by types of coal that may cause excessive pressure on the oven walls during the coking process. [4]

Coal is usually received on railroad cars or barges. Conveyor belts transfer the coal as needed from the barges or from a coal storage pile to mixing bins where the various types of coal are stored. The coal is then transferred from the mixing bins to a crusher where it is pulverized to a preselected size between 0.15 and 3.2 mm. The desired size depends on the response of the coal to coking reactions and the ultimate desired coke strength. Low volatile coals coke more readily if the particle size is small, and smaller particles are reported to increase coke strength.[2,4]

The pulverized coal is then mixed and blended, and sometimes water and oil are added to control the bulk density of the mixture. The prepared coal mixture is transported to the coal storage bunkers on the coke oven battery (see Figure 2-2). A weighed amount or specific volume of coal is discharged from the bunker into a larry car - a charging vehicle that moves along the top of the battery. The larry car is positioned over the empty, hot oven (called "spotting"), the lids on the charging ports are removed, and the coal is discharged from the hoppers of the larry car into the oven. To minimize the escape of gases from the oven during charging, steam aspiration is used at most plants to draw gases from the space above the charged coal into a collecting main.[4]

Peaks of coal form directly under the charging ports as the oven is filled. These peaks are leveled by a steel bar that is inserted by the pusher machine through a small door on the side of the oven, called the leveler or "chuck" door. The leveling process aids uniform coking and provides a clear vapor space and exit tunnel for the gases that evolve during coking to flow to the gas collection system. After filling, the chuck door and the topside charging ports are closed; the

latter may be sealed with a wet clay mixture called luting. The aspiration is turned off, and the gases are directed into the offtake system and collecting main.[2,4]

2.2.2 Thermal Distillation/Pushing/Quenching

Thermal distillation takes place in groups of ovens called batteries. A battery consists of 20 to 100 adjacent ovens with common side walls made of high quality silica and other types of refractory brick. Typically, the individual slot ovens are 11 to 16.8 m (36 to 55 ft) long, 0.35 to 0.5 m (1.1 to 1.6 ft) wide, and 3.0 to 6.7 m (9.8 to 22 ft) high. The wall separating adjacent ovens, as well as each end wall, is made up of a series of heating flues. The vast majority of by-product batteries in the U.S. have vertical flues (56 out of 58 batteries). Two batteries at Empire Coke in Holt, AL, however, have horizontal flues. Both are Semet Solvay batteries which is an antiquated design built in the early 1900s. Battery 1 was built in 1903 and is comprised of 40 ovens, and Battery 2 was built in 1913 and has 20 ovens. Unlike vertical flue batteries which include 25 to 37 individual flues along each oven wall, the flue system of the Semet Solvay design includes only five horizontal flues which convey the combustion gases from top to bottom in serpentine fashion.

The heating (underfire) systems fall into two general classes: underjet and gun-flue. In the underjet heating system, the flue gas is introduced into each flue from piping in the basement of the battery. The gas flow to each flue can be metered and controlled. The gun-flue system introduces the gas through a horizontal gas duct extending the length of each wall slightly below the oven floorline. Short ducts lead upward to a nozzle brick at the bottom of each of the vertical flues.[1] At any time, half of the flues in a given wall will be burning gas while the other half will be conveying waste heat from the combustion flues to a heat exchanger and then to the combustion stack. Every 20 to 30 minutes the battery "reverses," and the former waste heat flues become combustion flues while the former combustion flues become waste heat flues. This process avoids melting the battery brick work (the flame temperature is above the melting point of the brick) and provides more uniform heating of the coal mass.[2,4]

Each oven holds between 14 and 23 Mg (15 and 25 tons) of coal. Offtake flues remove gases that evolve during the destructive distillation process. Process heat comes from the combustion of gases between or beneath the coking chambers. The operation of each oven in the

battery is cyclic, but the batteries usually contain a sufficiently large number of ovens so that the yield of by-products is essentially continuous. The individual ovens are charged and discharged at approximately equal time intervals during the coking cycle. Coking continues for 15 to 18 hours to produce blast furnace coke and 25 to 30 hours to produce foundry coke. The coking time is determined by the coal mixture, moisture content, rate of underfiring, and the desired properties of the coke.[2] When demand for coke is low, coking times can be extended to 24 hours for blast furnace coke and to 48 hours for foundry coke. Coking temperatures generally range from 900 to 1,100 °C (1,650 to 2,000 °F) and are on the higher side of the range to produce blast furnace coke.[4]

During the coking process, the charge is in direct contact with the heated wall surfaces and develops into an aggregate "plastic zone." As thermal energy is absorbed, the plastic zone thickens and merges toward the middle of the charge. Volatile gases escape in front of the developing zone due to heat progression from the side walls. The maximum temperature attained at the center of the coke mass is usually 1,100 to 1,500 °C. At this temperature, all volatile matter from the coal mass evaporates and forms a high quality metallurgical coke.[6] Air is prevented from leaking into the ovens by maintaining a positive back pressure of about 10 mm (0.4 in) of water. The gases and hydrocarbons that evolve during thermal distillation are removed through the offtake system and sent to the by-product plant for recovery.[2,4]

Each oven is dampered off the collection main near the end of the coking cycle, typically when third or fourth in line to be pushed. Once an oven is dampered off, the standpipe cap is opened to relieve pressure. Volatile gases exiting through the open standpipe are ignited if they fail to self-ignite and are allowed to burn until the oven has been pushed. At some batteries a draft is created through the top of the oven by opening both standpipes (on a double main battery) or a charging lid while the standpipe is open. This practice, known as beehiving, can result in thick dark emissions if the oven is not fully coked.[1]

At the end of the coking cycle, doors at both ends of the oven are removed, and the incandescent coke is pushed out the coke side of the oven by a ram which is extended from the pusher machine. The coke is pushed through a coke guide into a special rail car, called a quench car, which traverses the coke side of the battery. The quench car carries the coke to a quench tower, typically located at the end of a row of batteries. Inside the quench tower, the hot coke is

deluged with water so that it will not continue to burn after being exposed to air. The quenched coke is discharged onto an inclined "coke wharf" to allow excess water to drain and to cool the coke to a reasonable temperature.[4] Gates along the lower edge of the wharf control the rate that the coke falls on the conveyor belt that carries it to a crushing and screening system. The coke is then crushed and screened to obtain the optimum size for the particular blast furnace operation in which it is to be used. The undersize coke generated by the crushing and screening operations is either used in other steel plant processes, stockpiled, or sold.[2,4] Figure 2-2 illustrates the major process equipment of a by-product coke oven battery. Note that the coke side is the side where the coke is dumped and quenched, and the pusher side is the side from which the pushing ram operates.

2.2.3 By-product Recovery Process

Gases evolved during coking leave the coke oven through standpipes, pass into goosenecks, and travel through a damper valve to the gas collection main which directs the gases to the by-product plant. These gases account for 20 to 35% by weight of the initial coal charge and are composed of water vapor, tar, light oils, heavy hydrocarbons, and other chemical compounds.[4]

The raw coke oven gas exits the ovens at temperatures estimated at 760 to 870 °C (1,400 to 1,600 ° F) and is shock cooled by spraying recycled flushing liquor in the gooseneck. This spray cools the gas to 80 to 100 °C (180 to 210 °F), precipitates tar, condenses various vapors, and serves as the carrying medium for the condensed compounds. These products are separated from the liquor in a decanter and are subsequently processed to yield tar and tar derivatives.[4]

The gas is then passed either to a final tar extractor or to an electrostatic precipitator for additional tar removal. When the gas leaves the tar extractor, it carries 75% of the ammonia and 95% of the light oil (primarily benzene, toluene, and xylene) originally present in the raw coke oven gas. The ammonia is recovered either as an aqueous solution by water absorption or as ammonium sulfate salt. Ammonium sulfate is crystalized in a saturator

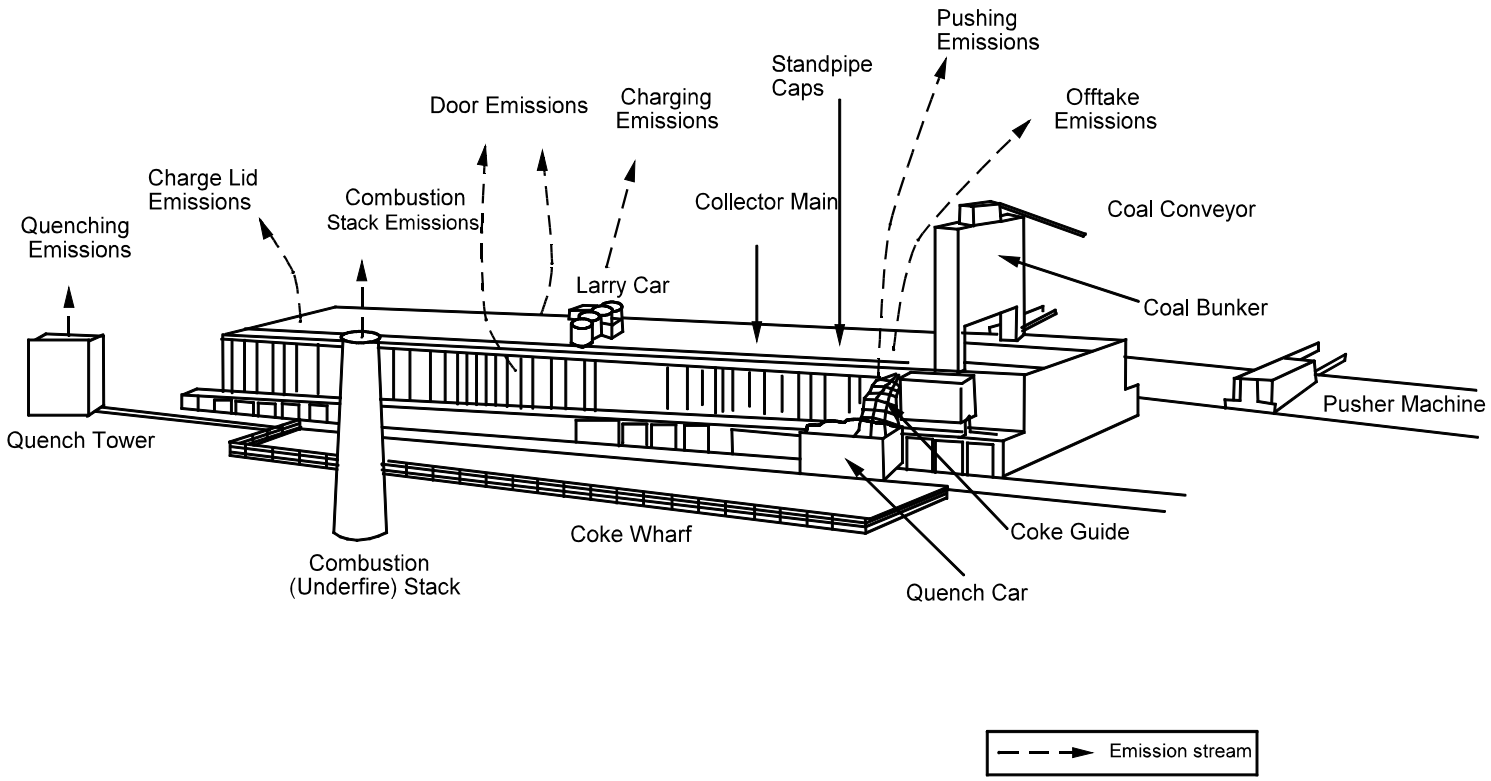

FIGURE 2-2. BY-PRODUCT COKE OVEN BATTERY SHOWING MAJOR EMISSION POINTS.

which contains a solution of 5 to 10% sulfuric acid and is removed by an air injector or centrifugal pump. The salt is dried in a centrifuge and removed.[4]

The gas leaving the saturator at about 60 °C (140 °F) is taken to final coolers or condensers where it is typically cooled by indirect heat exchange to approximately 24 °C (75 °F). The cooled gas is passed into a light oil or benzol scrubber, over which is circulated a heavy petroleum fraction called wash oil or coal-tar oil which serves as the absorbent medium. The oil is sprayed in the top of the packed absorption tower while the gas flows up through the tower. The wash oil absorbs about 2 to 3% of its weight in light oil, with a removal efficiency of about 95% of the light oil vapor in the gas. The rich wash oil is passed through a countercurrent steam stripping column. The steam and light oil vapors pass upward from the still through a heat exchanger to a condenser and water separator. The light oil may be sold as crude or processed to recover benzene, toluene, xylene, and solvent naphtha.[4]

After tar, ammonia, and light oil removal, the gas undergoes a final desulfurization process at most coke plants to remove H_2S before being used as fuel. The coke oven gas has a rather high heating value, on the order of 550 Btu/scf. Typically, 35 to 40% of the gas is returned to fuel the coke oven combustion system, and the remainder is used for other heating needs or is sold.[4]

2.2.4 Non-recovery Process

In 1998 there were two non-recovery plants operating in the U.S. (Jewel Coke and Coal Company in Vansant, Virginia and Indiana Harbor Coke in East Chicago, Indiana). As the name implies, this process does not recover the numerous chemical byproducts as discussed in the previous section. All of the coke oven gas is burned, and instead of recovery of chemicals, this process offers the potential for heat recovery and cogeneration of electricity. The Jewel Coke plant does not recover the waste heat. However, the Indiana Harbor facility takes advantage of the economic incentives of recovering the waste heat. In addition to the Indiana Harbor Coke plant, an 87-MW co-generation facility was also constructed; both began operations in mid 1998. This new non-recovery coke plant incinerates all volatile gases produced during coking and

leaves sulfur as the only contaminant. The sulfur (SO_2) is then removed from the exhaust gases using a scrubber. [1,4,7]

Non-recovery ovens are of a horizontal design (as opposed to the vertical slot oven used in the by-product process) with a typical range of 30 to 60 ovens per battery. The oven is generally between 9 and 14 m (30 and 45 ft) long and 1.8 to 3.7 m (6 to 12 ft) wide. The internal oven chamber is usually semicylindrical in shape with the apex of the arch 1.5 to 3.7 m (5 to 12 ft) above the oven floor. Each oven is equipped with two doors, one on each side of the horizontal oven, but there are no lids or offtakes as found on by-product ovens. The oven is charged through the oven doorway with a coal conveyor rather than from the top through charging ports.[4]

After an oven is charged, carbonization begins as a result of the hot oven brick work from the previous charge. Combustion products and volatiles that evolve from the coal mass are burned in the chamber above the coal, in the gas pathway through the walls, and beneath the oven in sole flues. Each oven chamber has two to six downcomers in each oven wall, and the sole flue may be subdivided into separate flues that are supplied by the downcomers. The sole flue is designed to heat the bottom of the coal charge by conduction while radiant and convective heat flow is produced above the coal charge.[4]

Primary combustion air is introduced into the oven chamber above the coal through one of several dampered ports in the door. The dampers are adjusted to maintain the proper temperature in the oven crown. Outside air may also be introduced into the sole flues; however, additional air is usually required in the sole flue only for the first hour or two after charging. All gas flow is a result of the natural draft (there are no exhausters), and the oven is maintained under a negative pressure. Consequently, the ovens do not leak as do the by-product ovens maintained under a positive pressure. The combustion gases are removed from the ovens and directed to the stack through a waste heat tunnel that is located on top of the battery centerline and extends the length of the battery.[4]

Pushing and quenching operations are similar to those at by-product coke oven batteries. One difference in pushing is that the height of fall of the hot coke is less for the non-recovery oven because of its horizontal rather than vertical design. With respect to emissions, there are

two major advantages of the nonrecovery process: (1) the ovens operate under negative pressure which eliminates leaks from doors, lids and offtakes during coking, and (2) wastewater and solid wastes associated with by-product recovery plants are absent. Emissions occur during charging, pushing, and quenching, however.[4]

2.3 SUMMARY OF CURRENT REGULATIONS

State and local regulations limit emissions from pushing, quenching, and battery stacks at coke ovens, which operate in 11 States. The standards vary both in terms of format and emission limits.

Relative to pushing, one of the most common formats is the average opacity of four pushes determined from the six highest consecutive opacity readings taken at 15-second intervals. This format is consistent with Method 9 in Appendix A to 40 CFR Part 60. Other batteries have opacity limits based on a single push, and some have limits based on any instantaneous opacity observation.

Relative to quenching, most State and local regulations prohibit the use of untreated wastewater and limit TDS in the make-up water used for quenching, require the use of baffles for git elimination, and include specifications for baffle coverage.

Most State and local regulations include opacity limits for battery stacks. Examples are 20% opacity for 6-minute averages, 20% opacity for 3 minutes per hour with a cap of 60%, and 30% opacity with a cap ranging from 30 to 60% for 8 minutes per hour. Many regulations require the operation of COMS for diagnostic purposes and as performance indicators. Some State and local agencies also require the use of COMS for continuous compliance determinations.

2.3.1 Pushing Regulations -- Fugitive Emissions

State and local regulations for fugitive emissions from pushing are summarized in Table 2-4 in terms of relative stringency, and more details are given in the following discussion.

Averaging. All existing standards use visible emission observers certified under EPA Method 9 to read opacity, typically at 15-second intervals. Some States average all the observations during a push and others average only the six highest consecutive readings per

push. In most cases, several 15-second readings are averaged together, such as over the course of a push, over 4 pushes, or over 6 minutes of observations (average of 24 15-second readings). The exceptions are Allegheny County Pennsylvania, the State of Utah, and the State of Alabama, which do not utilize averaging. Allegheny County and Alabama require that emissions be read continuously (rather than every 15 seconds). Utah requires that readings be taken at 15-second intervals, but compliance determinations are based on any single reading.

Continuous, or instantaneous, readings could result in a standard that is difficult to achieve on a continuous basis if compliance was determined daily. For example, data from instantaneous readings in Allegheny County, Pennsylvania were evaluated; a total of 1,904 pushing observations taken at 18 batteries resulted in an average of 92% compliance with the County's 20% opacity standard. If compliance was determined daily, then the average battery would not be in compliance 29 days out of the year (or 8% of the time).[8]

Opacity During Travel. Most pushing regulations include travel to the quench tower, but a few administer separate limits for the time coke is being pushed from the oven and the time the quench car travels to the quench tower. Separate standards for travel are listed in Table 2-4 under "Travel Opacity;" most are listed as "in push," indicating that travel to the quench tower is subject to the same standard as the push.

Exceptions. The State of Alabama has the only regulation that allows an exception to the opacity standard: one or two pushes per hour (depending on plant) may exceed 40% opacity.

2.3.2 Regulations for Pushing Control Devices

Standards for pushing emissions control devices (e.g., baghouses, wet stationary scrubbers, and mobile scrubber cars) exist in three different formats: (1) percent opacity at the control device stack, (2) pounds of particulate per ton of coke (lb/t), and (3) grains of particulate per dry standard cubic feet of coke (gr/dscf). Some batteries are subject to an opacity limit as well as an emission limit (lb/t or gr/dscf). State and local regulations for pushing emissions control devices are summarized in Table 2-5.

TABLE 2-4. REGULATIONS FOR FUGITIVE PUSHING EMISSIONS -- RANKED

No.	Rank	Plant	Battery ID	No. of batteries	Push Opacity	Travel Opacity	Averaging[1]	Exceptions
1	1	Erie Coke, Erie, PA	A,B	2	20	10	none	none
2	1	Koppers, Monessen, PA	1B, 2	2	20	10	none	none
3	1	Shenango, Pittsburgh, PA	1	1	20	10	none	none
4	1	USS, Clairton, PA	1 - 3	3	20	10	none	none
5	1	USS, Clairton, PA	7 - 9	3	20	10	none	none
6	1	USS, Clairton, PA	13 - 15	3	20	10	none	none
7	1	USS, Clairton, PA	19 - 20	2	20	10	none	none
8	1	USS, Clairton, PA	B	1	20	10	none	none
9	2	Geneva Steel, Provo, UT	1, 2	2	20	in push	none	none
10	2	Geneva Steel, Provo, UT	3, 4	2	20	in push	none	none
11	2	National Steel, Ecorse, MI	5	1	20	in push	none	none
12	3	Wheeling-Pitt, E Steubenville,WV	1, 2, 3	3	20	10	per push	none
13	3	Wheeling-Pitt, E Steubenville,WV	8	1	20	10	per push	none
14	4	National Steel, Granite City, IL	B	1	20	in push	per push**	none
15	5	AK Steel, Ashland, KY	3& 4	2	20	in push	per push	none
16	5	AK Steel, Middletown, OH	W	1	20	in push	per push	none
17	5	LTV Steel, Warren, OH	4	1	20	in push	per push	none
18	5	New Boston, Portsmouth, OH	2	1	20	in push	per push	none
19	5	USS, Gary, IN	2 & 3	2	20	in push	per push	none
20	5	USS, Gary, IN	5 & 7	2	20	in push	per push	none
21	6	Indiana Harbor, E. Chicago, IN	A,B,C,D	4	20	in push	3-min	none
22	7	Acme Steel, Chicago, IL	1 & 2	2	20	in push	4 pushes*	none
23	7	LTV Steel, Chicago, IL	2	1	20	in push	4 pushes*	none
24	7	Citizens Gas, Indianapolis, IN	E/H	2	20	in push	4 pushes*	none
25	7	Citizens Gas, Indianapolis, IN	1	1	20	in push	4 pushes*	none
26	7	National Steel, Granite City, IL	A	1	20	in push	4 pushes*	none
27	8	Bethlehem, Lackawanna, NY	7, 8	2	20	in push	6-min	none
28	8	Jewell Coke, Vansant, VA	2D,E;3B C,F,G	6	20	in push	6-min	none
29	8	Tonawanda, Buffalo, NY	2	1	20	in push	6-min	none
30	9	Bethlehem, Burns Harbor, IN	1	1	40	in push	6-min	none
31	9	Bethlehem, Burns Harbor, IN	2	1	40	in push	6-min	none
32	10	ABC Coke, Tarrant, AL	1A	1	40	in push	none	1/hr > 40
33	10	ABC Coke, Tarrant, AL	5 & 6	2	40	in push	none	1/hr > 40
34	10	Gulf States Steel, Gadsden, AL	2, 3	2	40	in push	none	1/hr > 40
35	10	Sloss, Birmingham, AL	3, 4, 5	3	40	in push	none	1/hr > 40
36	11	Empire Coke, Holt, AL	1, 2	2	40	in push	none	2/hr > 40
				68				

[1] Averaging:

"none" indicates instantaneous readings are used.

" per push" means all 15-second readings are averaged over the course of a push.

"per push**" means the observation of four consecutive pushes is required to determine compliance; the highest six consecutive 15-second readings per push are used to calculate average opacity for each push.

"4 pushes*" means the highest six consecutive 15-second readings per push are used to calculate average opacity for each push; four consecutive pushes are then averaged together for an overall average.

TABLE 2-5. EMISSION LIMITS FOR PUSHING EMISSION CONTROL DEVICES

Plant	Battery ID	No. of batteries	Control Device	Stack Opacity	lb/t of Coke	gr/dscf
ABC Coke, Tarrant, AL	1A	1	BH	40	none	none
ABC Coke, Tarrant, AL	5 & 6	2	BH	40	none	none
Acme Steel, Chicago, IL	1 & 2	2	WS	20	0.04	none
AK Steel, Ashland, KY	3 & 4	1	BH	20	0.03	none
AK Steel, Middletown, OH	W	1	BH	none	none	0.03
Bethlehem Steel, Burns Harbor, IN	1	1	WS	40	0.04	none
Bethlehem Steel, Burns Harbor, IN	2	1	BH	20	0.04	none
Bethlehem Steel, Lackawanna, NY	7 & 8	2	BH	none	0.07	none
Citizens Gas, Indianapolis, IN	E/H	2	BH	30	0.04	none
Citizens Gas, Indianapolis, IN	1	1	BH	30	0.04	none
Erie Coke, Erie, PA	A,B	2	SC	20	none	0.02
Geneva Steel, Provo, UT	3, 4	2	BH	10	none	0.004
Geneva Steel, Provo, UT	1, 2	2	BH	10	none	0.004
Indiana Harbor Coke Co., East Chicago, IN	A, B, C, D	4	BH	20	0.04	none
Jewell Coal and Coke, Vansant, VA	2D, 2E, 3B, 3C, 3F, 3G	6	none	none	none	none
Koppers, Monessen, PA	1B, 2	2	BH	20	none	0.02
LTV Steel, Chicago, IL	2	1	BH	20	0.03	none
LTV Steel, Warren, OH	4	1	SC	none	none	0.05
National Steel, Ecorse, MI	5	1	BH	15	0.02	none
National Steel, Granite City, IL	A & B	2	SC	20	0.04	none
Shenango, Pittsburgh, PA	1	1	BH	20	0.04	0.01
Sloss Industries, Birmingham, AL	3, 4, 5	3	BH	40	none	none
Tonawanda, Buffalo, NY	2	1	BH	none	0.07*	none
USS, Clairton, PA	B	1	BH	20	0.04	none
USS, Clairton, PA	7 - 9	3	BH	20	none	0.01
USS, Clairton, PA	1 - 3	3	BH	20	none	0.01
USS, Clairton, PA	13 - 15	3	BH	20	0.04	0.01
USS, Clairton, PA	19 - 20	2	BH	20	0.04	none
USS, Gary, IN	2 & 3	2	SC	none	0.04	none
USS, Gary, IN	5 & 7	2	BH	none	0.04	none

*Tonawanda has a limit of 0.05 lb/ton of coal, which is approximately 0.07 lb/ton of coke.

BH = baghouse; SC = scrubber car; WS = stationary wet scrubber.

2.3.3 Quenching Regulations

Twelve batteries at five plants are required to maintain baffles or to have properly operating baffles in their quench tower(s). Thirteen batteries at seven plants are required to have baffles that cover 95% of the cross sectional area of the quench tower. Twenty-four batteries at 11 plants have TDS limits on quench water ranging from 750 to 1,600 mg/L. Twenty-three batteries at eight plants are required to use "clean" water (e.g. river water or a source other than untreated process water) for quenching. State and local regulations for quenching are summarized in Table 2-6.

2.3.4 Battery Stack Regulations

All State and local regulations use EPA Method 9 to determine battery stack opacity. Current limits range from 10% to 40% opacity. Compliance determinations are typically made by taking opacity readings every 15 seconds for 1 hour. Forty-three battery stacks at 17 plants are also subject to a grain loading limit; these range from 0.008 to 0.05 gr/dscf.

Thirty-seven battery stacks at 17 plants are allowed an exception to the opacity standard. Most are allowed up to 60% opacity for an aggregate of 3 to 8 min/hr (12 to 32, 15-second readings in a 60-minute period). Battery #1 at Bethlehem Steel, Burns Harbor, Indiana, is subject to a 60% opacity limit of the cumulative total of 60 readings (15 minutes) in addition to a standard 40% opacity limit. State and local regulations for battery stacks are summarized in Table 2-7.

TABLE 2-6. BASELINE REGULATIONS FOR QUENCHING

Plant	Battery ID	No. of Batteries Served by Tower	Are Baffles Required?	TDS Limit (mg/L)
ABC Coke, Tarrant, AL	1A	1	Yes	none
ABC Coke, Tarrant, AL	5 & 6	2	Yes	none
Acme Steel, Chicago, IL	1 & 2	2	Yes	1,200*
AK Steel, Ashland, KY	3 & 4	1	Yes	750*
AK Steel, Middletown, OH	W	1	Yes	none
Bethlehem Steel, Burns Harbor, IN	1	1	Yes	1,500
Bethlehem Steel, Burns Harbor, IN	2	1	Yes	500
Bethlehem Steel, Lackawanna, NY	7 & 8	2	Yes	1,600
Citizens Gas, Indianapolis, IN	E/H	2	Yes	1,500
Citizens Gas, Indianapolis, IN	1	1	Yes	1,500
Erie Coke, Erie, PA	A,B	2	No	none
Geneva Steel, Provo, UT	3, 4	2	Yes	1,300
Geneva Steel, Provo, UT	1, 2	2	Yes	1,300
Indiana Harbor Coke Co., East Chicago, IN	A, B, C, D	4	No	1,100
Jewell Coal and Coke, Vansant, VA	2D, 2E,	2	No	none*
Jewell Coal and Coke, Vansant, VA	3B, 3C, 3F, 3G	4	No	none*
Koppers, Monessen, PA	1B, 2	2	No	none*
LTV Steel, Chicago, IL	2	1	Yes	1,500*
LTV Steel, Warren, OH	4	1	Yes	none
National Steel, Ecorse, MI	5	1	Yes	800*
National Steel, Granite City, IL	A & B	2	Yes	1,200*
Shenango, Pittsburgh, PA	1	1	Yes	none*
Sloss Industries, Birmingham, AL	3, 4, 5	3	Yes	none
Tonawanda, Buffalo, NY	2	1	Yes	1,600
USS, Clairton, PA	B	1	Yes	none
USS, Clairton, PA	7 - 9	3	Yes	none
USS, Clairton, PA	1 - 3	3	Yes	none
USS, Clairton, PA	13 - 15	3	Yes	none
USS, Clairton, PA	19 - 20	2	Yes	none
USS, Gary, IN	2 & 3	2	Yes	none
USS, Gary, IN	5 & 7	2	Yes	none

* quench water quality is specified, i.e., no by-product plant effluent or process water shall be used.

TABLE 2-7. EMISSION LIMITS FOR BATTERY STACKS

Plant	Battery ID	Number of Stacks	Grain Loading Limit (gr/dscf)	Opacity Limit (%)	Exceptions
ABC Coke, Tarrant, AL	1A, 5, 6	2	None	20	May exceed 20% opacity for up to 3 minutes an hour.
Acme Steel, Chicago, IL	1, 2	2	0.05	30	Opacity may range from 30% to 60% for up to 8 minutes (32 15-second readings) in any 60-minute period. This exception is limited to 3 times a day. Opacity limit does not apply during flue repairs (up to 3 hours per oven repaired).
AK Steel, Ashland, KY	3 & 4	2	0.03	20	None.
AK Steel, Middletown, OH	3	1	None	20	Opacity may range from 20% to 60% for up to 6 consecutive minutes in any 60 minutes.
Bethlehem Steel, Burns Harbor, IN	1	1	None	40	There is also a 60% limit for the cumulative total of 60 readings (15 minutes).
Bethlehem Steel, Burns Harbor, IN	2	1	None	20	2-hour opacity limit.
Bethlehem Steel, Lackawanna, NY	7, 8	2	0.05	20	Opacity may reach up to 50% as long as a specific coke oven repair plan is followed.
Citizens Gas, Indianapolis, IN	1	1	0.015	30	None.
Citizens Gas, Indianapolis, IN	E, H	1	0.03	30	None.
Empire Coke, Holt, AL	1, 2	1	None	20	May exceed 20% opacity for up to 3 minutes an hour.
Erie Coke, Erie, PA	A, B	1	0.04	20	Opacity may range from 20% to 60% for up to 3 minutes an hour.
Geneva Steel, Provo, UT	1, 2, 3, 4	4	0.024	20	None.
Gulf States Steel, Gadsden, AL	2, 3	2	None	20	May exceed 20% opacity for up to 3 minutes an hour.
Koppers, Monessen, PA	1, 1B	2	0.04	20	Opacity may range from 20% to 60% for up to 3 minutes an hour.
Indiana Harbor Coke Co., East Chicago, IN	A, B, C, D	4	0.008	10	None.
Jewell Coal and Coke, Vansant, VA	2D, 2E, 3B, 3C, 3F, 3G	6	None	20	None.
LTV Steel, Chicago, IL	2	1	0.03	30	Same as Acme Steel, above.

TABLE 2-7. EMISSION LIMITS FOR BATTERY STACKS (continued)

Plant	Battery ID	Number of Stacks	Grain Loading Limit (gr/dscf)	Opacity Limit (%)	Exceptions
LTV Steel, Warren, OH	4	1	0.03	20	Opacity may range from 20% to 60% for up to 6 minutes an hour.
National Steel, Ecorse, MI	5	1	0.012	20	None.
National Steel, Granite City, IL	A	1	0.05	30	Same as Acme Steel, above.
National Steel, Granite City, IL	B	1	0.03	30	Same as Acme Steel, above.
New Boston, Portsmouth, OH	2	1	None	20	Opacity may range from 20% to 60% for up to 6 minutes an hour.
Shenango, Pittsburgh, PA	1	1	0.015	20	Opacity may range from 20% to 60% for up to 3 minutes an hour (12 readings).
Sloss Industries, Birmingham, AL	3, 4 & 5	2	None	20	May exceed 20% opacity for up to 3 minutes an hour.
Tonawanda, Buffalo, NY	2	1	0.05	20	None.
USS, Clairton, PA	1-3, 7-9, 19	7	0.03	20	Opacity may range from 20% to 60% for up to 3 minutes an hour (12 readings).
USS, Clairton, PA	13-15, 20, B	5	0.015	20	Opacity may range from 20% to 60% for up to 3 minutes an hour (12 readings).
USS, Gary, IN	2 & 3	2	0.03	20	None.
USS, Gary, IN	5 & 7	2	0.05	20	None.
Wheeling-Pittsburgh, East Steubenville, WV	1, 2, 3, 8	2	None	20	Opacity may range from 20% to 40% for an aggregate of 5 minutes per hour (20 readings).

2.4 REFERENCES

1. Data from RTI project database compiled from EPA section 114 survey responses and industry, July 1998.

2. Report, Coke Oven Emissions from Wet-Coal Charged Byproduct Coke Oven Batteries - Background Information for Proposed Standards, EPA-450/3-85-028a, December 1985.

3. Agarwal, et. Al., "Injecting Coal and Natural Gas: Which One? How Much?," New Steel, December 1996.

4. Draft Report, Emission Factor Documentation for AP-42, Section 12.2 - Coke Production, EPA Contract 68-D2-0159, May 1995.

5. Hogan and Koelble, "Steel's Coke Deficit: 5.6 Million Tons and Growing," New Steel, December 1996.

6. Report, Background Report AP-42 Section 12.2, Coke Production, EPA, October 1998, pg. II-103.

7. Unknown, "New Coke Facility is Under Construction at Inland Steel," New Steel, December 1996.

8. Pushing: Analysis of Pushing Opacity Data From Allegheny County Inspections, Prepared by RTI for EPA, January 12, 1999.

3. EMISSION POINTS AND CONTROL TECHNIQUES

This chapter discusses air pollution control measures used to control emissions from pushing, quenching, and battery stacks. Emission control is accomplished with a combination of equipment and work practices (including maintenance and repair). Cokeside sheds, traveling scrubber cars, and one-spot quench cars are examples of equipment that have been designed specifically for the capture and control of pushing emissions. Traditional control techniques for emissions from quenching include the installation of baffles in quench towers and the use of clean water (e.g., lake, river, or treated process water) rather than untreated process water for quenching. Systematic operating and maintenance procedures including diagnostics and repair are common techniques used to control coke oven emissions from combustion stacks.

One way to reduce emissions is to prevent them from being formed. Incomplete coking results in “green” coke, the emissions from which contain several listed HAP, including "coke oven emissions" and POM, as well as volatiles and high boiling hydrocarbons. “Coke oven emissions” - itself listed as a HAP - contains numerous HAP such as benzene, toluene, xylenes, cyanide compounds, naphthalene, phenol, and POM. Green coke is produced when a section of coal does not reach the temperature required for the near-complete cracking of evolved hydrocarbons.[1] The production of green coke affects HAP emissions from pushing, quenching and battery stacks in the following ways:

- a green push is characterized by clouds of dense black or yellow/brown smoke;
- green coke has been shown to release more PAH during quenching than non-green coke[2]; and
- the causes of excess battery stack emissions also contribute to the formation of green coke.

The two main causes of green coke are: (1) pushing the coke from the oven before the coking process is complete, and (2) uneven oven heating, resulting in local cold spots.[1] Overcharging the oven can also result in green coke. Good oven maintenance and control of heating practices results in lower rates of incomplete coking and overall reduced emissions.

3.1 PUSHING

HAP emissions during pushing result from incomplete coking, which results in a "green" push. Green pushes can be caused by overcharging an oven, cold flues due to plugging or poor combustion, non-uniform heating, and cold spots on the ends of ovens. Emissions from green pushes range from moderate (relatively small amounts of green coke) to severe (large amounts of green coke). Green pushes generate voluminous plumes of emissions that overwhelm the capture system used for PM emissions. When the push is severely green, a yellow-brown plume of emissions can be seen from the battery and quench tower.

There are several methods for controlling emissions from pushing, including systematic operation and maintenance and pushing emission capture systems. Moveable hoods that were initially installed to control PM emissions also reduce HAP emissions from pushing, but are not effective in capturing and controlling coke oven emissions from green pushes. The most effective control is to: (1) minimize the frequency of green pushes by implementing a preventative maintenance program for the battery and (2) work practices that include diagnostic procedures to identify the cause of green pushes and corrective actions to prevent reoccurrence. Batteries that have implemented these procedures on a continuing basis have few green pushes.

Three distinct types of pushing emission capture and control systems are currently used by coke plants:

- a movable hood connected to a stationary duct vented to a stationary (land-based) emission control device;
- a coke side shed vented to a stationary emission control device; and
- a hooded/vented quench car attached to a mobile scrubber car.

3.1.1 Systematic Operation and Maintenance

Systematic operation and maintenance includes work practices and procedures designed to prevent the pushing of green coke. Systematic operation and maintenance is the most effective method of reducing fugitive emissions from pushing. Severely green pushes are characterized by dense black or yellow/brown smoke that overwhelms moveable hood capture systems. The

following are essential elements of systematic operation and maintenance to prevent green pushes:

- ensuring that the minimum net coking time has been met before pushing
- monitoring individual flue temperatures and overall oven temperature
- inspecting oven walls for cracks or damage
- observing pushes in order to locate damaged ovens
- prompt diagnosis and repair of damaged ovens.

The first step in preventing green pushes is ensuring that the minimum net coking time is met for each oven to prevent undercoking. Cracks or holes in oven walls or uneven heating (from a plugged flue, for example) can result in localized areas of green coke. Chronic emissions are prevented with regular flue and wall inspections along with prompt repair of damaged ovens.

3.1.2 Capture and Control Systems

In addition to good operating and maintenance practices to prevent green pushes, most batteries are equipped with capture and control systems for routine PM emissions from pushing. Pushing emissions control devices in place at coke oven facilities in the U.S. in 1998 are summarized in Table 3-1. There are 30 control devices applied to pushing emissions at 56 coke oven batteries, and there are three combinations of capture and control systems used. The most common capture system is a moveable hood. There are 19 moveable hood systems. Sixteen moveable hood systems serving 30 batteries are vented to a baghouse, and three systems serving four batteries are vented to a venturi scrubber. There are 15 batteries equipped with cokeside sheds that enclose the entire length of the battery and are served by six baghouses. There are six batteries equipped with cokeside sheds that serve as settling chambers and are not ventilated. Seven batteries are equipped with mobile scrubber cars which transport venturi scrubbers.

None of the pushing emission capture systems is 100% effective, and most do not capture emissions during travel to the quench tower. In 1998, 39 of 68 existing coke oven batteries reported estimated capture efficiencies of between 82.8 and 99.8%.[3] In 1998, all baghouses except one operated under negative pressure. The vast majority used pulse-jet cleaning; only 3

used shaker-type cleaning. In 1998, all baghouses except one used polyester bags.[3] Wet scrubber and baghouse parameters are presented in Tables 3-2 and 3-3.

3.1.3 Moveable Hood/Fixed Duct

The moveable hood/fixed duct system consists of a hood that covers the quench car and mates with an enclosed guide. The hood connects to a duct which in turn is connected to a land-based gas cleaning system located near the battery. During the push, gases are drawn from the coke guide and quench car into the hood where they are channeled to the exhaust duct. The belt-sealed duct system (see Figure 3-1) allows the hood to travel with the quench car and has emerged as the most functional and widely accepted method of controlling pushing emissions worldwide.[4] Historically, hoods that cover the quench car and the coke guide did not capture emissions from the quench car as it traveled to the quench tower. This was solved by traveling hood systems such as Envirotech's "Trav-L-Vent" and Dravo Corporation's "Minister Stein." [4, 5] In these systems, the hood travels on the coke side bench on a special steel bridge, which carries a third rail and supports the collecting duct.[6] The duct has a continuous opening along the top that is internally braced and covered with grating to provide support for the belt that seals the opening. A gas transition or "tripper" car travels along the top of the duct and lifts the belt over the duct inlet section between the tripper rolls and covers the duct opening to convey the gases from the mobile hood into the duct.[7] In other belt-sealed duct systems the hood moves with the door machine, attaching to the tripper car and aligning with the coke guide before each push.[8] Despite the capability of traveling hoods, in practice they do not regularly travel to the quench tower at most facilities that use them for pushing emissions control.[3,8]

Another form of the fixed-duct system consists of a moveable hooded coke guide and a stationary duct with individual dampered ports. The duct runs the length of the coke side of the battery and is equipped with one or two damper doors aligned with each oven. A telescoping or "snorkel" duct on the hooded coke guide connects it to the duct. Coke oven emissions are transported through the duct to a baghouse at one end. An end-line damper to allow controlled air flow is housed at the opposite end.[9] Because of the increased maintenance and potential

malfunction of numerous individual doors along the duct, this type of emission control system is less reliable than the belt-sealed duct system.[8]

TABLE 3-1. PUSHING EMISSION CONTROLS SYSTEMS USED IN 1998[3]

Plant	Battery	Pushing Capture	Pushing Controls
ABC Coke, Tarrant, AL	1	Moveable hood; belt-sealed duct	Baghouse
	5, 6	Moveable hood; belt-sealed duct	Baghouse
Acme Steel, Chicago, IL	1, 2	Moveable hood; belt-sealed duct	Venturi scrubber
AK Steel, Ashland, KY	3	Moveable hood; belt-sealed duct	Baghouse
	4	Moveable hood; belt-sealed duct	Baghouse
AK Steel, Middletown, OH	3	Moveable hood; belt-sealed duct	Baghouse
Bethlehem Steel, Burns Harbor, IN	1	Moveable hood; belt-sealed duct	Wet scrubber
	2	Moveable hood; belt-sealed duct	Baghouse
Bethlehem Steel, Lackawanna, NY	7, 8	Cokeside shed	Baghouse
Citizens Gas, Indianapolis, IN	E, H	Moveable hood; belt-sealed duct	Baghouse
	1	Moveable hood; belt-sealed duct	Baghouse
Empire Coke, Holt, AL	1, 2	None	None
Erie Coke, Erie, PA	A, B	Enclosed coke guide	Mobile scrubber car
Geneva Steel, Provo, UT	1, 2, 3, 4	Cokeside shed	Baghouse
Gulf States Steel, Gadsden, AL	2, 3	None	None
Indiana Harbor, East Chicago, IN	A, B, C, D	Cokeside shed	Baghouse
Jewell Coal & Coke, Vansant, VA	2D, 2E, 3B, 3C, 3F, 3G	Cokeside shed	None
Koppers, Monessen, PA	1B, 2	Moveable hood; belt-sealed duct	Baghouse
LTV Steel, Chicago, IL	2	Moveable hood; dampered ports	Mitsubishi Baghouse
LTV Steel, Warren, OH	4	Enclosed coke guide	Mobile scrubber car
National Steel, Ecorse, MI	5	Moveable hood; dampered ports	Baghouse
National Steel, Granite City, IL	A, B	Enclosed coke guide	Mobile scrubber car
New Boston, Portsmouth, OH	2	None	None
Shenango, Pittsburgh, PA	1	Cokeside shed	Baghouse
Sloss Industries, Birmingham, AL	3, 4, 5	Moveable hood; belt-sealed duct	Baghouse
Tonawanda, Buffalo, NY	2	None	None
USS, Clairton, PA	3-5	Moveable hood; belt-sealed duct	Baghouse
	7-9	Moveable hood; belt-sealed duct	Baghouse
	13-15	Moveable hood; belt-sealed duct	Baghouse
	19, 20	Moveable hood; belt-sealed duct	Baghouse
	B	Cokeside shed	Baghouse
USS, Gary, IN	2, 3	Enclosed coke guide	Mobile scrubber car
	5, 7	Moveable hood; dampered ports	Baghouse
Wheeling-Pittburgh, East Steubenville, WV	1, 2, 3	Cokeside shed	Baghouse
	8	Moveable hood; dampered ports	Wet Scrubber

TABLE 3-2. WET SCRUBBER PARAMETERS (1998)[3]

Wet Scrubber Parameters				
Plant	**Type of Scrubber**	**Liquid Flowrate to Scrubber (gal/min)**	**Air Flowrate (acfm)**	**Pressure Drop (inches of water)**
Acme Steel, Chicago IL	A-33 Venturi-Rod scrubber	1,500	144,900	36
Bethlehem Steel, Burns Harbor, IN	Venturi	1,140 - 1,300	164,000 - 171,000	53 - 60
Erie Coke, Erie, PA	Koppers design scrubber car	350	37,500	1.87
LTV Steel, Warren, OH	One-spot Chemico car	660	110,000	unknown
National Steel, Granite City, IL	Venturi	650	62,000	32
US Steel, Gary, IN	Venturi	600	66,000	24
Wheeling-Pittsburgh, East Steubenville, WV	Venturi	1,150	132,000	31

TABLE 3-3. BAGHOUSE PARAMETERS (1998)[3]

Baghouse Parameters				
Plant	**Air-to-cloth Ratio (1,000 acfm/ft^2)**	**Air Flowrate (acfm)**	**Number of Compartments**	**Pressure Drop (inches of water)**
ABC Coke, Tarrant, AL	6.46	130,000	4	8
AK Steel, Ashland, KY	6.14	162,000	5	unknown
AK Steel, Middletown, OH	5.5	86,000	4	3.5
Bethlehem Steel, Burns Harbor, IN	5.94	200,000 - 215,000	6	4.4 - 8.8
Bethlehem Steel, Lackawanna, NY	5.17	450,000	8	8
Citizens Gas & Coke Utility. Indianapolis, IN	5.47	149,000	8	6
Citizens Gas & Coke Utility, Indianapolis, IN	6.24	100,000	8	6
Geneva Steel, Provo, UT	2.46	140,000	10	1.5 - 5
Indiana Harbor Coke, East Chicago, IN	7.36	150,000	4	4 - 8
Koppers, Monessen, PA	4	123,000	4	3
LTV Steel, Chicago, IL	2.09	150,000	4	3
National Steel, Ecorse, MI	5.15	185,000	6	7
Shenango, Pittsburgh, PA	5.5	300,000	8	13
Sloss Industries, Birmingham, AL	2.93	152,500	7	unknown
US Steel, Clairton, PA	5.6	109,367	5	unknown
US Steel, Clairton, PA	5.6	107,167	5	unknown

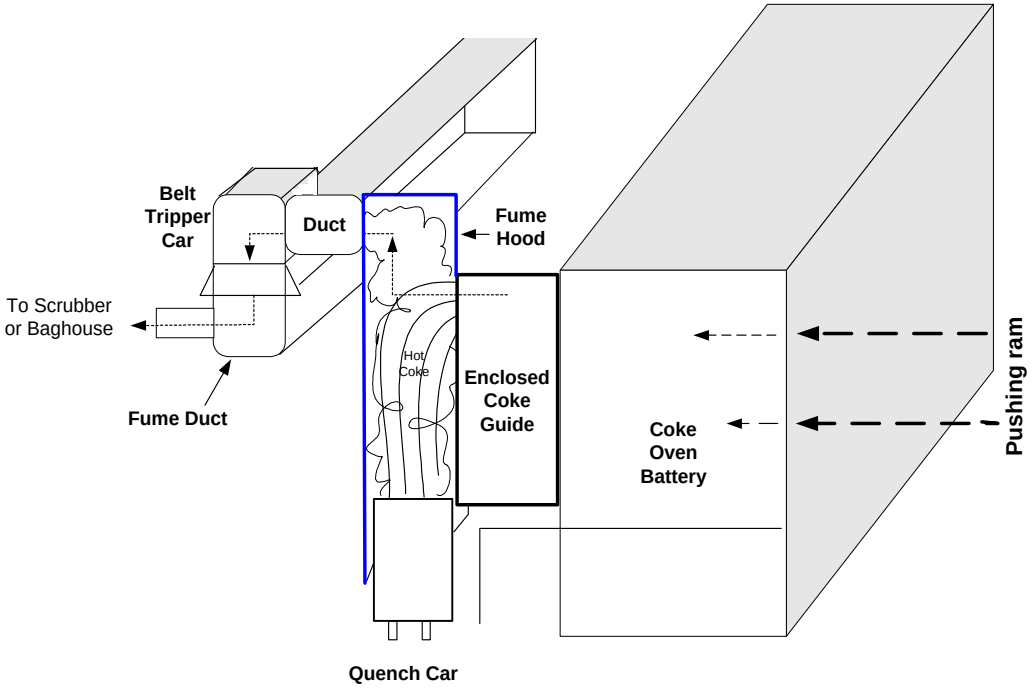

FIGURE 3-1. SCHEMATIC OF A BELT-SEALED DUCT SYSTEM

3.1.4 Coke Side Shed

A coke side shed (see Figure 3-2) is a structure built on the coke side of the battery that covers the length of the battery and the width between the battery and the side of the quench car tracks farthest from the battery. The shed length may be increased to include the section of quench car tracks between the battery and the quench tower.[4]

There may be baffles inside the shed to control gas movement. The smoke is drawn off to a baghouse through a series of ductwork. As the smoke cools, gas velocity is reduced and large particulate may fall out.[6] Some early sheds used electrostatic precipitators; however, baghouses are currently the only control used on batteries with cokeside sheds because they reduce power usage and are more efficient in removing PM. Because cokeside sheds cover an entire side of the coke oven battery, they effectively capture emissions from oven door leaks as well as from pushing.

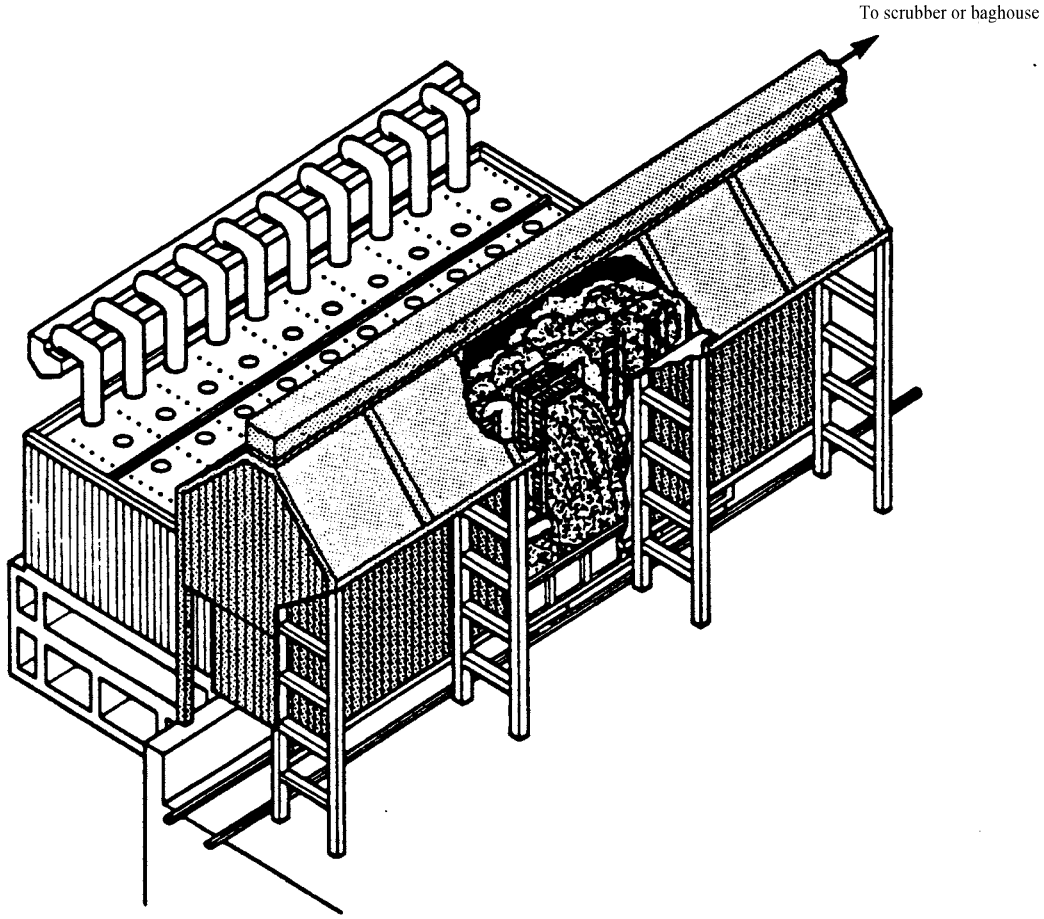

FIGURE 3-2. SCHEMATIC OF A COKESIDE SHED

3.1.5 Mobile Scrubber Car

Mobile scrubber cars were popular in 1970's but have for the most part been replaced by stationary systems. This mobile pushing control system is a complete gas cleaning system that captures and cleans coke pushing emissions. The complete system (see Figure 3-3) includes the following components:

- a hood that encloses the coke guide mounting and can be raised or lowered (creating an enclosed coke guide);
- a one-spot quench car mounted on a special rail car; and
- a self-propelled gas cleaning car.

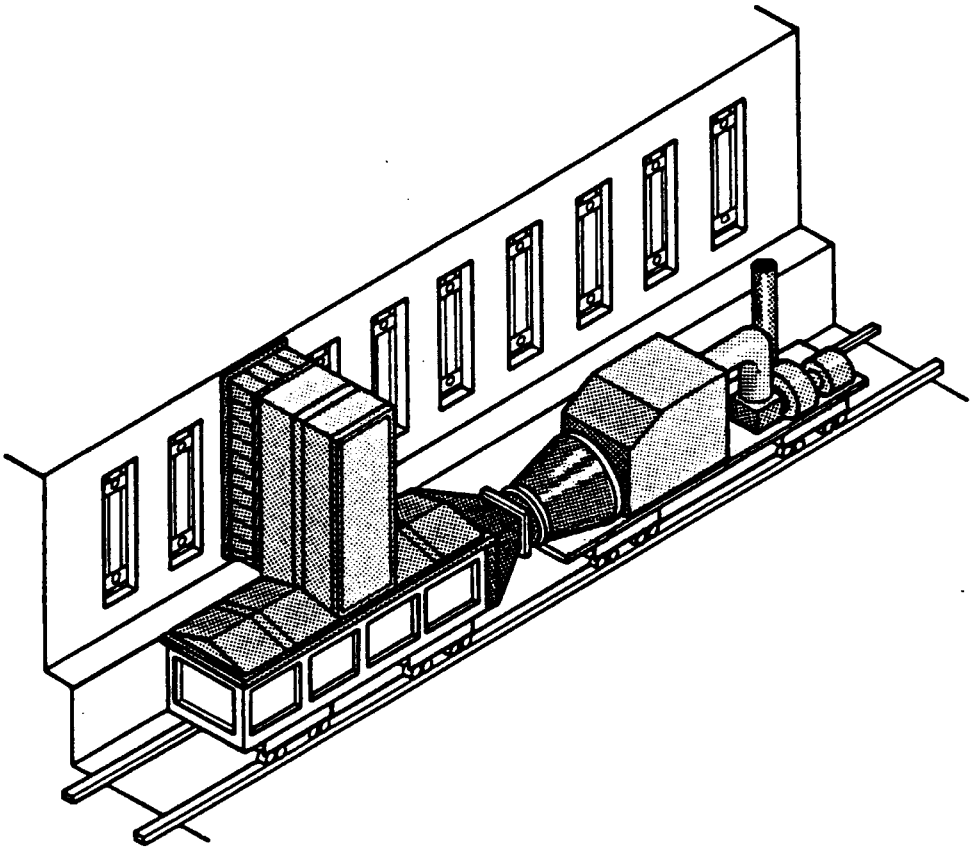

FIGURE 3-3. SCHEMATIC OF A MOBILE SCRUBBER CAR

Emissions travel through the ductwork into a wet venturi-type scrubber and air-water separator where the solid particulate in the gases are removed. The principal methods used to create the volumetric flow needed for the capture and cleaning of the gases is a diesel engine driven fan. Depending on the particular design, steam or compressed air eductors have been used. Evacuation through the quench car usually continues until the quench cycle is commenced.[10] The scrubbing solution (a few hundred gallons per quench) is stored on the scrubber car and replaced when the quench car is at the quench station.

The exhaust flow rate on the mobile scrubber car (~ 50,000 acfm) is smaller than that in other stationary control devices (100,000 to 200,000 acfm). The fan on the scrubber car is turned on during the push and it operates at a lower speed during travel to the quench tower. Mobile scrubber cars became less popular in the 1980s due to the high cost of operation and maintenance and the requirement of heavy track to support the combined weight of the quench car and

scrubber car. Another disadvantage of this type of control is that mobile scrubber cars create scrubber effluents that need to be treated. In addition, equipment on mobile scrubber cars must be mounted close together, limiting accessibility for maintenance. The diesel engine used on most cars also requires periodic maintenance.[11]

3.2 QUENCHING

Quenching is the process whereby hot coke is cooled as soon as feasible after being pushed from the oven. The most common method of quenching coke is with water, known as "wet quenching". Although there are other methods of quenching in use in other parts of the world, coke facilities in the U.S. use wet quenching exclusively.

3.2.1 Overview of Wet Quenching

The large steam plume that occurs from spraying water onto hot coke makes the emissions from wet quenching one of the most visible sources of air pollution associated with coke oven batteries. This steam plume tends to mask the particulate in the plume and also makes sampling for particulate emissions very difficult.[12]

After hot coke is pushed from the oven into a quench car, the quench car travels by rail to a quench tower. Wet quenching involves spraying a large quantity of water onto the hot coke for periods of 90 to 120 seconds. The water (and steam) cool the coke under a flue that directs the resulting steam plume into the atmosphere.[12]

Approximately 1,000 to 3,000 L (270 to 800 gal) of water per ton of coke are sprayed into the quench car through a system of nozzles located in the tower above. These nozzles are positioned to evenly distribute the water, and they are sized to allow the complete application in 1 to 4 minutes, sometimes with an intermittent spray schedule. Quench towers range from short, rectangular structures to those with tall (~35 m) round stacks (see Figure 3-4). Typical materials of construction include wood, brick, or metal.[12]

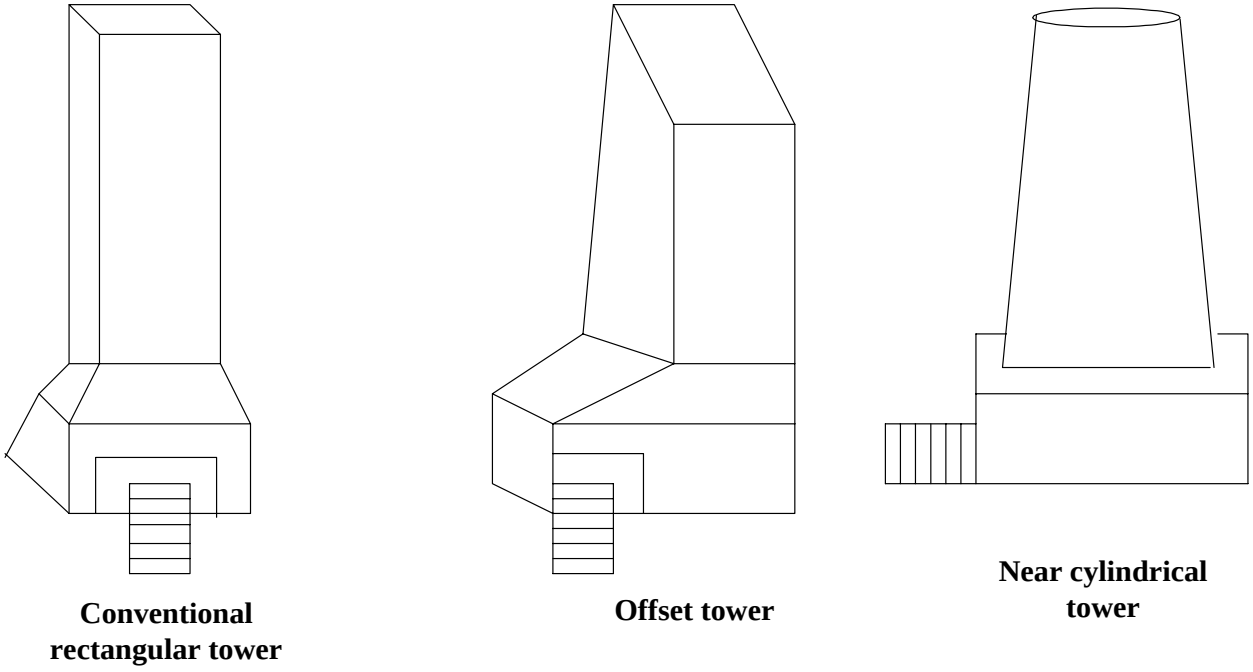

FIGURE 3-4. QUENCH TOWER DESIGNS

The number and configuration of spray nozzles and the amount of water used per quench varies from site to site. A major variation is the use of LO-MO[R] quenching, wherein solid streams of water are directed onto the hot coke, rather than using sprays. The intent of this procedure is to allow water to penetrate through the bed of coke to form steam that will flow back up through the coke, thereby cooling it. [12]

Modern quenching operations use a recirculating system by which quench water is reused and make-up water is added to replenish the loss due to evaporation.[12] Make-up water is typically derived from a nearby river or lake, but has included “dirty water” (process water), such as scrubber blowdown or wastewater from the by-product recovery plant.

Emissions of HAP can originate from contaminants in dirty water if it is used for quenching and from the quenching of green coke. A study of quenching emissions found that the quenching of green coke increased emissions of PAH and BSO, which are indicators of coke oven emissions.[2]

3.2.2 Overview of Dry Quenching

Dry quenching cools hot coke without bringing the coke in direct contact with water. Coke can be cooled by the circulation of inert gas or by indirect use of water.

Coke Dry Quenching Process. In the CDQ process, coke is cooled by inert gas. The CDQ system includes a two-stage CDQ chamber (containing pre-cooling and cooling chambers), a boiler, and a dust recovery network. Hot coke is pushed into a bucket car which transports the coke to CDQ unit. The coke is charged into the precooling chamber at the top of the CDQ chamber. Excess dust is transferred out of the precooling area and the hot coke is charged in batches into the cooling chamber below. Inert gas is circulated in a closed circuit between the cooling chamber and the boiler, where heat from the coke is recovered and transferred into steam with heat exchangers. Cooled coke is discharged from the bottom of the cooling chamber. The inert gas used for cooling is formed by the coke when it is charged into the precooling chamber. [13]

There are no visible emissions from the enclosed CDQ process, and heat from the hot coke is recovered with minimum operating costs. The original CDQ process was invented in the early 1970s. CDQ systems are currently in full-scale operation at over 50 coke plants in more than 11 countries. The process is not currently used in the U.S.[13]

Kress Indirect Dry Cooling. The KIDC process uses water to indirectly cool hot coke. The process involves pushing and quenching and reduces emissions from both operations. Hot coke is pushed into a specially made container, slightly bigger than the charge, that has been positioned flush against the oven. The box is then sealed and transferred via a KIDC carrier (a large piece of equipment designed to transport KIDC containers) to the quenching station, where the container is slid into a cooling rack. Cooling water is circulated around the container for approximately 2 hours, after which time the container is transferred to the dump station and the coke is emptied onto the coke wharf.[14]

The KIDC process was demonstrated for 2 months on a 4-m coke battery at Bethlehem Steel Corporation's Sparrows Point plant in 1991. During a 6-month baseline and 2-month demonstration period, 321 pushes were performed using the KIDC process and equipment. Bethlehem Steel Corporation shut down its Sparrow's Point facility's coke ovens for economic reasons unrelated to this demonstration. As a result of this shutdown, this project was

prematurely terminated. Based on the results from the 2-month demonstration, the technology looks promising for the reduction of pushing and quenching emissions. However, a longer demonstration would have permitted a better assessment of operability in the rigors of a coke oven environment. In addition, an expanded test period could have addressed some of the problems that were identified but not resolved during the demonstration test.[14]

3.2.3 Baffles

The only emission control equipment used to reduce quenching emissions are baffles, and their designs are as varied as the towers themselves. Most baffles consist of wooden slats spaced 10 to 20 cm apart, inclined at an angle of 14 to 70° from the horizontal. In some cases, there may be more than one row of baffles or they may be of a special design. Use of baffles is primarily intended for reduction of carryover or fallout of particulates that often occurs in the vicinity of the quench tower. Several factors contribute to the effectiveness of baffles: materials, configuration, height of baffle installation, and maintenance.

The intended action of these "mist eliminators" is the interception of particulates and water droplets carried in the quench vapor updraft. Most of the larger particulate and water droplets that impact the baffles presumably fall back down the tower. However, some of the dust-bearing mist adheres to the baffles until it is physically removed by overhead sprays or some similar cleaning mechanism.[12]

Particulate test data for quench towers are not extensive, partially because of the sampling difficulty. The data available have been obtained by a variety of sampling methods. All of the data evaluated for a report on emissions control from wet quench towers in 1979 indicate that particulate removal for baffles ranges from 50 to 95% depending on the types of baffles.[12] Maintenance, replacement of damaged baffles, and periodic cleaning of dirty baffles are important in achieving consistent performance in the control of PM.[12] Of the 43 existing quench towers, 40 have baffles, 22 have the baffles cleaned daily, 21 are subject to a TDS limit, 18 have the baffles inspected monthly, and at least 12 have baffles that cover 95% or more of the cross sectional area of the tower. The frequency of baffle cleaning and inspection based on a 1998 survey of U.S. coke plants is summarized in Table 3-4.

3.2.4 Water Quality and Coke Quality

Water quality has an important effect on emissions from quenching because dissolved solids may be emitted and organic contaminants can become airborne, either by vaporization or entrainment in water droplets. Test data available on the effect of water quality indicate that use of "dirty" water can result in PM emissions 1.5 to 3 times greater than emissions from towers using clean water.[12] In addition, organic contaminants present in the dirty water, such as PAH, BSO, and phenol, were also emitted.[2] Most plants use relatively clean service water or treated process water to control and reduce emissions from quenching. Quench towers serving 18 out of 68 existing batteries in 1998 used at least some dirty water for quenching - typically wastewater from the by-product recovery plant or scrubber blowdown.[3] Several states have limitations on TDS in quench water, presumably to prevent the use of dirty water. The number of plants that use clean water or have a limit on TDS in quench water are presented in Table 3-4.

Coke quality (greenness) also affects emissions from quenching. Tests have shown that when severely green coke and moderately green coke are both quenched with clean water, the severely green coke emits several times the amount of PAH.[2] In addition, some data indicate that grain loadings are higher in the outside sections of towers; these sections correspond to areas near the ends of the coke in the quench car, where coke is most likely to be green.[12]

3.2.5 Offset Quench Towers / Deflectors

The most common quench tower design consists of a large flue immediately above the quench car. However, the utilization of offset towers is a design option that is sometimes employed specifically to reduce quenching mist carryover. The concept of the offset quench tower originated with the successful use of large deflection partitions in the lower portion of quench towers immediately above the quench car position. Installations of this type force quench vapors to bend around an obstacle prior to ascending the tower, and the momentum of the larger droplets and particles causes them to impact on the internal surfaces of the tower. Offset towers accomplish the same end with a small variation of methodology: the quench plume collides with a slanting ceiling immediately above the quench chamber, and this ceiling directs the steam to the vertical tower section which is adjacent to the quench car position (see Figure 3-4).[12]

3.2.6 Factors Affecting Performance

Several design characteristics can affect quench tower performance. The major design factors that influence emission control are summarized below:

- **Cross-Sectional Area -** broader towers have lower air velocity and a larger inner wall surface for condensation, impaction, and adhesion, making them better able to contain emissions.[12]

- **Height -** the best height for a particular location depends on several factors including: the tonnage of coke per quench, cross-sectional area of the quench tower stack, and the proximity and height of nearby structures.[12]

- **Orientation** (offset or straight)- in offset quench towers, the plume hits a slanted ceiling immediately above the quench chamber which directs the steam to the vertical tower section adjacent to the quench car position .[12]

- **Air Access -** may be limited at the base of the tower by the installation of shrouding at the quench car doors and/or by designing the doors to be as small as possible. These measures may be utilized to solve one of two problems: (1) excessive flue velocity causing particulate/mist carryover, and (2) low stack draft causing emissions at the quench car doors.[12]

3.3 BATTERY STACKS

Battery stack emissions occur when raw coke oven gas leaks through oven walls into flues and when there is poor combustion in the underfiring system. Emissions from stacks are usually most noticeable when ovens are charged with coal. Elevated opacity values occur due to the substantial and sudden increase in oven pressure and the resulting leakage of raw coke oven gas into the flue system. The intensity and duration of the in-leakage and impact on stack opacity is a direct result of the physical condition of the oven walls and presence of sealing carbon.

TABLE 3-4. SUMMARY OF QUENCH TOWER REQUIREMENTS AND MAINTENANCE PRACTICES[3]

Specification	Number of Quench Towers (out of 43 total)	Number of Plants (out of 25 total)
Baffles present	40	23
Baffles required	37	21
Clean water used	29	19
TDS limit in place (500 to 1,600 mg/L)	21	11
Baffles inspected:		
At least monthly	18	12
Quarterly	2	2
Bi-annually	10	3
Annually	5	4
Baffles cleaned:		
At least daily	22	12
At least weekly	3	2
"As needed"	5	4
Bi-annually or Annually	5	3

There are 53 battery stacks that serve 58 batteries. Five plants have a pair of batteries served by one stack, and all other stacks are associated with a single battery.

Coke oven emissions from battery stacks are controlled by good operation and maintenance which includes using a COMS in the stack. Good operation and maintenance involves identifying problem ovens that produce high stack opacity emissions when ovens are charged, diagnosing problems, and repairing ovens or adjusting the underfiring system. Although some coke oven batteries had add-on devices (such as baghouses and electrostatic precipitators) on their stacks in the late 1970s to 1980s, they are no longer in use today.[15] Add-on devices were primarily used as particulate removal devices and probably provided little for control of gaseous HAP, CO or NO_x emissions. In contrast, systematic operation and maintenance procedures control both gaseous and particulate emissions by preventing the emissions from occurring.

Visible observations and COMS on the stacks are used to identify problem ovens that are in need of maintenance or repair. When excess visible emissions or high opacity readings are noted from a battery stack, the ovens most recently charged are often the source of emissions. If these ovens are identified and scheduled for inspections of oven walls and flues, the source of excess emissions can often be determined and corrected.

The COG used as underfiring fuel can also contribute to stack emissions. This is particularly true if the COG isn't desulfurized prior to being combusted. All but three coke oven batteries in the U.S. use COG as underfiring fuel; the other three use a combination of COG and BFG. Thirty-eight of the 58 by-product recovery batteries in the country desulfurize COG prior to using it as underfiring fuel. The reported H_2S content in underfiring fuel gas ranged from 7 to 350 gr/100 scf in 1998.[3] All batteries that use only desulfurized COG for underfiring reported H_2S levels of 50 gr/100 scf or less.[3]

3.3.1 Continuous Opacity Monitors

In order to continuously monitor stack emissions, a COMS can be installed on a battery stack. An opacity monitor is a transmissometer that consists of an optical transmitter/receiver unit mounted on one side of the stack and a reflector unit mounted on the other side. The transmitter emits a known amount of light across the interior of the stack. The light is directed at the reflector which reflects the light beam back to the receiver unit. Any smoke or dust passing through the stack reduces the amount of light being reflected. The receiver unit measures the amount of light received. The difference in the amount of light transmitted and the amount of light received is called the opacity reading, which is stated as a percentage. Zero percent indicates no emissions are present, while 100% indicates the highest emissions.

Stack emissions most likely originate at the last oven charged. COMS data can be used to identify ovens with potential problems. The opacity is constantly recorded, making it possible to identify malfunctioning ovens by correlating the occurrence of high opacity readings on the COMS record with the oven charging schedule. A total of 27 stacks on 27 batteries at 9 plants had COMS in 1998; their function is summarized in Table 3-5.[3]

TABLE 3-5. SUMMARY OF COMS ON COKE OVEN BATTERY STACKS, 1998

COMS use	Number of:		
	Stacks	Batteries	Plants
Diagnostics (all plants)	27	27	9
Enforcement[a]	6	6	3
Supplementary evidence[b]	13	13	2

[a] *The plant must submit the COMS results to the State and demonstrate continuous compliance with the 20% opacity limit.*

[b] *Compliance is determined from daily visual inspections; however, the COMS results can be used as supplementary evidence.*

3.3.2 Systematic Operation and Maintenance

In the late 1970s, EPA investigated emission control techniques and performance for battery stacks. The CF&I coke plant in Pueblo, Colorado was identified as having one of the most effective emission control programs in the country. The plant relied on systematic operation and maintenance procedures such as:[16]

- spray patching on end flues of each oven at least once every 5 weeks,
- inspecting oven walls every 3 days,
- making repairs as needed based on routine operation and inspection.

The success of CF&I's procedures was confirmed in two stack tests. During a test in 1978, Battery D averaged 0.024 gr/dscf of PM (1.7 kg/hr or 81 g/Mg of coal). Opacity readings during the test were typically zero; the highest reading was 10%. In another test in 1979, the battery averaged 0.039 gr/dscf (3.2 kg/hr or 109 g/Mg coal). The highest 6-minute average opacity reading was 11%.[16]

Systematic operation and maintenance procedures have improved in recent years over those used by CF&I, primarily with the use of COMS to identify problems and prompt actions to correct them. Although all plants now have a program in place, additional details were obtained for the USS Clairton Works, which is the Nation's largest coke plant with 12 batteries. The modern program used at USS Clairton is described in the following paragraphs.

Diagnostics.[17] COMS are installed in all stacks with recorders in each control room. When the opacity is over 20% for 3 minutes or if it exceeds 60% on any 15 second reading, an alarm and warning light are triggered and operating personnel conduct an investigation. The investigation starts with inspecting the heating wall flues on the most recently charged ovens to try to determine the source of the leakage. Also, there is a visual inspection of oven sole flues through the air boxes. The specific location of the wall leakage is usually determined by turning on the oven's aspirating steam while looking into the flue. Combustion conditions are also checked, including the flame characteristics, the reversing mechanism, gas pressure, and stack draft.

***Repairs*.**[17] Once the damage is identified, the type of repair depends on the extent of the damage. If the damage is minor, the oven wall may be spray patched once the oven is pushed. If the damage is severe, the oven may be taken out of service and more extensive repairs made. Spray patching is performed on a continuing basis for minor repairs. This involves spraying the oven walls to fill cracks and spalls in the brick work. Other repairs include dry gunning, which is used to fill larger areas of deterioration. "Complete jobs" are done on a continuing basis and involve taking two or three problem ovens per day out of service and repairing the entire oven (walls and floor) using spray patching, dry gunning, silica dusting, and infrequent ceramic welding.

For severely damaged brick work, brick replacement may be required. In this case, the oven would be taken out of service and partially rebuilt through end flue or through wall brick work replacement.

Routine and preventative maintenance.[17] Routine and preventative maintenance includes a crew of personnel who do daily inspection and repair of flues and walls, cleaning gas piping, and checking the reversing mechanism and flue combustion. Each month the wall flue temperatures are measured and recorded, and problem flues and leaks are identified. Every 6 months, battery "setting" is performed, which includes items such as inspection of valve and damper settings and measurement of waste gas percent oxygen. Another routine procedure is that if excessive carbon buildup is removed and there is inadequate carbon to seal small cracks, the oven wall is sprayed before being put into service.

Worker training is also important. The company requires a 40 hour training program that emphasizes the importance of these procedures for controlling emissions and extending battery life.

A 1998 survey of the industry indicates that all coke plants now have some type of program of systematic operation and maintenance designed to reduce stack emissions, improve combustion efficiency, and extend battery life.[3] Excess stack emissions, whether noted manually or with a COMS, generally trigger some type of corrective action; e.g., the last oven charged may be noted and inspected, or span temperature or crosswall flue temperature readings may be taken. Several of the most common techniques used to maintain and repair coke ovens are described in the following sections. Specific examples of investigation and diagnosis of the two main concerns - improper or incomplete combustion, and leakage between oven space and flue system - are described in Table 3-6.

The following is a list of some observations of the causes of excess stack emissions and/or how emissions may be reduced by regular monitoring and maintenance practices:

- After oven repair or partial rebuild, leaks in the brickwork are most likely to occur at the tie-in joint - the site of new brick/old brick interface.

- A fine layer of carbon on the inside of ovens (resulting from the cracking of hydrocarbons) is desirable to help seal cracks and crevices. However, a buildup of excessive carbon can result in problems (e.g. hard pushes, reduced heat transfer from oven walls, etc.). Therefore it is necessary to periodically burn off excess carbon, a process known as decarbonization.

- Excess stack emissions can also occur when *too much* carbon is allowed to burn off of the inside of an oven. This can occur at shift changes, for example, when recently pushed ovens are left empty for an extended period before charging.

- If excessive stack emissions are noted right after an oven has been charged, the fuel gas to that oven can be shut off temporarily to restore the air-to-fuel ratio. Once coking begins and the resulting carbon seals any leaks in the oven walls, the gas is turned back on (typically after 10 to 15 minutes).[8]

Visual Inspection. Visual inspection includes inspecting flues through the flue caps on the top of the battery and inspecting oven walls, roof, and end flues when the oven doors are still

off after pushing. During the inspection of the flue, the flame color and intensity are assessed and the presence of smoke is noted. The flame color and intensity can show whether the fuel-to-air ratio is appropriate, and the presence of smoke indicates leakage of raw oven gas from the oven to the flue. During the inspection of the walls, roof, and end flues, any cracks are noted and corrective action is scheduled.

End-Flue Patching. End-flue patching is done by applying a mortar slurry to large cracks (> 1/8" wide) on end flues to seal the cracks and to prevent raw oven gas from entering the flue system and causing excess stack emissions. Ovens must be taken out of service to be patched. Patching reduces the size of cracks and it is usually done before silica dusting (described below), which is more effective in sealing smaller cracks (< 1/8" wide). End-flue patching is done on one end of an oven at a time. After the oven door is removed, loose material at the end flue area is raked out and the oven is scraped to remove scaling, loose mortar, and carbon. Occasionally, extremely hard build-ups must be removed by a chipping gun. The gap is trowel-patched, then the area is sprayed with a mortar slurry and the excess is removed by a scraper before the material sets up. After the patching work has been completed, the walls and end flues are inspected. If the patching is acceptable, the oven floor is cleaned and the door replaced. This process is then repeated on the other end of the oven. When end flue-patching is completed, the charging holes are spray patched along with any cracks in the interior wall of the oven that are accessible from the oven top. With jambs, end walls, and charging holes patched the oven is now ready for silica dusting.[18]

Mobile Gunning. Mobile gunning is an alternate patching technique used in conjunction with end-flue patching and spray patching for large cracks. It is a technique for patching cracks in the interior portion of oven walls and roof that cannot be reached by hand-held patching equipment.[16]

TABLE 3-6. SYSTEMATIC OPERATION AND MAINTENANCE PROCEDURES TO REDUCE STACK EMISSIONS

A. IMPROPER OR INCOMPLETE COMBUSTION			
Potential source of stack emissions	**Inspection[a]**	**Diagnosis**	**Operation and maintenance procedures**
Clogged fuel gas jets or nozzles	Visually inspect through flue caps on top of the battery.		Clean fuel nozzles and gas jets as needed or regularly.
Cracks in the fuel nozzle or the fuel nozzle block	Visually inspect through flue caps on top of the battery.	During the flue cap inspection, create a vacuum[b] in the adjacent ovens to see if the flame from the flue cap subsides. If not, there probably are fuel leaks around the fuel nozzle or in the nozzle block.	Replace nozzle or place sealant around the nozzle or patch sealant on the gun block to stop leakage.
Improper fuel gas and air mixture	a. Inspect air box opening and gas valves. b. Check for blockage in sole flue.	Inspect through ports in the sole flues to see whether smoke exists and/or use portable O_2 and combustible gas meters[c] to locate problem ovens.	a. Adjust battery draft and finger-bars on the air box opening or check for mechanical malfunctions of gas and air valves. b. Remove blockage in sole flue.
Excess oven pressure	a. Inspect gooseneck and standpipe for blockage; check back pressure regulation. b. Check waste heat damper setting for excess flue pressure		a. Remove blockage or clean carbon deposit. b. Adjust waste heat damper.
B. LEAKAGE BETWEEN OVEN SPACE AND FLUE SYSTEM			
Crack in oven brickwork	Visually inspect through flue caps on top of the battery and inside oven walls when the doors are off of the ovens after pushing.	a. During flue cap inspection, create a vacuum[2] in adjacent ovens to see if the flame in the flue or from the flue cap subsides. If it does, there is probably a leak in the wall. b. Pressurize the adjacent flues of an empty oven; candle-like flames inside the oven walls indicate leaks.	Use spray patching, silica welding, or mobile gunning to seal large cracks and silica dusting to seal small cracks, or replace damaged brickwork.

TABLE 3-6. SYSTEMATIC OPERATION AND MAINTENANCE PROCEDURES TO REDUCE STACK EMISSIONS (continued)

Potential source of stack emissions	Inspection[a]	Diagnosis	Operation and maintenance procedures
Lack of good carbon deposit in the crack of the oven surface	Check collector main pressure.		Adjust collector main pressure; prevent prolonged empty oven between pushing and charging.
End flues	Visually inspect end flues when the doors are off of the ovens after pushing		Seal large and small cracks regularly. Repair brickwork at end flues as needed. Ovens may be silica dusted just before charging.
Excess raw oven gas generated after charging that leaks through oven walls to flues			Shut off the fuel gas for that oven for 15 to 20 minutes to burn off excess raw oven gas and allow carbon deposit to seal the cracks on the oven walls.

[a] Visually inspect stack emission after the charging of an oven or use COMS to identify problem ovens; excess stack emissions are usually associated with recently charged ovens.

[b] Turn on the steam aspiration system in the oven temporarily to create a vacuum inside the oven.

[c] If the $\%O_2$ is below 4% and/or the level of combustibles is above 0.4%, the coking process in the oven may be considered abnormal and the oven a source of emissions.

The mobile refractory gunning device is usually mounted on a large truck bed and consists of a telescoping gun on a mask, a slurry mixing tank, a pump, auxiliary equipment, and control devices. The telescoping gun is insulated and cooled by circulating water through the barrel. The mast provides upward and downward movement. The gun can traverse along the length of the oven, and the spray head can be swivelled 360° to reach any points in the oven. When an oven is identified for patching, both oven doors are removed and the truck is positioned in front of the oven on the push side. The operator stands near the end of the empty oven, visually inspects the interior of the oven, positions the spray head by remote control, then applies the patching slurry to the cracks in the walls.[16]

Ceramic Welding. Ceramic welding is similar to mobile gunning in that it uses a boom and lance device to deliver a patching material to the interior of a damaged oven. Ceramic welding, however, uses no water and therefore forms a more durable and longer-lasting weld than slurry-based mobile gunning.[19]

In ceramic welding, refractory material is conveyed in air through water-cooled lances to the damaged area. Oxygen is introduced at the lance, and the heat released from oxidation of metallic constituents fuses the material to the damaged brickwork. The procedure can be carried out while the oven is kept at or near its normal operating temperature, resulting in little downtime. Heat shields are used to maintain flue temperatures during the mobile gunning process.[20]

Silica Dusting. Silica dusting relies on the pressure differences between an empty oven, which is at atmospheric pressure, and the heating flues, which are under negative stack draft, to carry the fine silica dust particles into small cracks in the oven walls. Large cracks will permit the silica dust to pass through directly into the flues, so they have to be sealed by patching first.

Before silica dusting begins, the oven floors are cleaned, and oven doors, off-take openings, and lids are sealed to prevent silica dust from escaping through these openings. Flue temperatures are adjusted to approximately 2,100 ^{o}F. The silica dust is placed in a hopper and aspirated by compressed air through a hose to a discharge pipe located below the center charging hole. The rate of dusting is controlled by a valve in the bottom of the hopper such that the dust

will be distributed evenly throughout the oven chamber. A manometer connected to a charging hole at the coke-side end of the oven is used to monitor the dusting process. As the cracks are being sealed, the pressure in the oven becomes steady. When a steady pressure of 75 mm H_2O or higher is obtained, the dusting process is considered complete. The procedure generally takes 1-1/2 to 2 hours. After the oven is charged, the flues are inspected for leakage.[18]

3.4 REFERENCES

1. A. Conners & J. Mullen. "Developments in Coke Oven Emission Control," Iron & Steel Engineer, June 1980,.pp. 33 - 38.

2. Report, Coke Quench Tower Emission Testing Program, EPA-600/2-79-082, York Research Corporation, April 1979.

3. Data from RTI project database compiled from EPA section 114 survey responses, July 1998.

4. A. Murphy, "Profit from Pollution," Iron & Steel International, Oct. 1982, pp. 260-268.

5. M. Jasinski, "Status of Coke Pushing Emissions Control and Available Emissions Data," Proceedings of Air Pollution Control in the Iron and Steel Industry, Chicago Illinois, April 21-23 1981, pp. 114 - 126.

6. Report, Technical Support Document for Control of Coke Oven Pushing Emissions, Prepared by RTI for EPA, Contract No. 68-01-4141, Circa 1980.

7. C. Skalos & R. Vogelsberger, "The Design and Startup of a Dravo/Still "Minister Stein" Type Coke Oven Pushing Emission Control System," Technical Conference on Control of Air Emissions From Coke Plants, Pittsburgh, Pennsylvania, April 17-19 1979, pp. 64-73.

8. S. George & E. Kong, Research Triangle Institute, Site Visit Reports -- ABC Coke, Bethlehem Steel, Citizen's Gas & Coke Utility, Koppers Industries, Inc., LTV Steel, Shenango Inc., Sloss Industries, USS Clairton Works, USS Gary Works. March 31, 1998 - June 5, 1998.

9. R. Randolph & C. Price, "U.S. Steel Gary Works Land Based Pushing Emissions Control," Ironmaking Conference Proceedings, vol. 42, April 1983, pp. 371-376.

10. D. Metzger, et al, "A Comparison of Alternative Coke Pushing Emission Control Systems," Proceedings: Symposium on Iron and Steel Pollution Abatement Technology, Pittsburgh, PA, November 16-18, 1982, pp. 182 - 189.

11. D. Masson, “Selection and Design of a Coke Side Pushing Emission Control System for Retro-Fit to Existing Coke Oven Batteries,” Technical Conference on Control of Air Emissions From Coke Plants, Pittsburgh Pennsylvania, April 17-19 1979.

12. Report, Engineering Analysis of Emission Controls for Wet Quench Towers, Prepared by MRI for EPA, Contract No. 68-02-2609, January 1979.

13. O. Ritamaki, “Environmentally Feasible Coke Dry Quenching Technology at Rautaruukki Ltd., Raahe Steel,” Steel World, no. 1, 1996, pp. 21 - 27.

14. C. Vogel and W. Ponder, “Environmental Tests Comparing Kress Indirect Dry Cooling with Conventional Coke Oven Pushing and Quenching,” Characterization and Control of Odors and VOC in the Process Industries. Eds. Vigneron/Hermia/Chaouki. Elsevier Science, 1994, pp. 397-407.

15. Report, Setting New Source Performance Standards and National Emission Standards for Hazardous Air Pollutants, Coke Oven Battery Stacks; Emission Test Recommendations, Prepared by MRI for EPA, Contract No. 68-02-3059, April 9, 1979.

16. Report, Coke Oven Battery Stacks - Background Information for Proposed Standards, EPA Office of Air Quality Planning and Standards, May 1980.

17. M. Branscome, Research Triangle Institute, Site Visit Report -- USS Clairton Works. June 8, 1999.

18. J. Sundholm and J.Saunders, “Patching and Silica Dusting of Coke Ovens at Pittsburgh Works,” Proceedings Control of Air Emissions from Coke Plants, Western Pennsylvania Section, Air Pollution Control Association, April 1979.

19. Telecon, S. George, Research Triangle Institute to B. Wise, ABC Coke, March 5, 1998.

20. Fax from Mark Poling, ABC Coke, to Emery Kong, RTI., Describing procedures for the control of battery stack emissions, January 21, 1998.

4. MODEL BATTERIES

This chapter develops model batteries to use for estimating emissions and the cost of emission control. Model batteries are used to represent groups of actual batteries and reflect many of the differences among the actual population of batteries.

4.1 APPROACH

Major features affecting emissions and control costs were identified. Based on literature reviews, site visits, and discussions with plant personnel, the following battery features were identified as most affecting emissions and control costs for pushing, quenching, and battery stacks:

- overall battery condition,
- non-recovery vs. by-product recovery process,
- foundry vs. furnace coke,
- short (less than 5 m) vs. tall (5 or 6 m) ovens, and

4.2 BATTERY INFORMATION

Data from an industry-wide EPA survey[1] were used to develop representative values for battery characteristics (such as coking time and annual coke production) to assign to the model batteries. The survey provided information on battery design, operation, maintenance and repair, pushing and quenching operations, and underfiring parameters from 75 batteries at 27 plants in 1998. However, because two plants have shutdown since that time, the data from 68 batteries at the 25 plants currently in operation were used to develop model batteries.

Actual batteries were assigned to a model battery based on type of battery (non-recovery or by-product recovery), type of coke produced (furnace or foundry), battery condition, and battery height. Median values for the batteries in each group were assigned to the model batteries. The characteristics of the model batteries are presented in Table 4-1 for the different groups and classes. Relative to furnace coke batteries, foundry coke batteries have fewer ovens longer coking times, and a lower production rate.

4.3 MODEL DEVELOPMENT

The batteries were separated into three categories that included 10 nonrecovery batteries (Group 1), 14 foundry coke batteries (Group 2), and 44 furnace coke batteries (Group 3) (see Table 4-1). The 14 foundry coke batteries were divided into 3 classes, 11 that have or only need to implement a baseline repair program (Classes A and B), and 3 that need more extensive repairs in addition to a baseline repair program (Class C). The 44 furnace coke batteries were divided into four classes, 41 batteries that have or only need to implement a baseline repair program (Class A - C) and 3 batteries that need more extensive repairs in addition to a baseline repair program (Class D). Among batteries that have pushing emission control, classes vary based on battery condition; Classes A and C in Group 3 differ only in oven height. Table 4-2 provides additional details on how the actual batteries were grouped.

Battery condition is one of the fundamental factors affecting emissions and control costs. Model batteries with "no significant costs for pushing or stacks" represent batteries currently operating at the MACT level. Those requiring a baseline repair program represent batteries that need minor repairs and regular maintenance to attain MACT (the baseline repair program is described in more detail in Chapter 6). Batteries in need of more extensive repairs are categorized as needing, "two through-walls, 10 end flues, and spray patching on 50% of ovens" to facilitate cost calculations. Data used to classify battery condition include the survey responses, observations during site visits, and discussions with plant personnel and State and local regulators.

4.4 REFERENCES

1. Data from RTI project database compiled from EPA section 114 survey responses and industry, July 1998.

TABLE 4-1. MODEL BATTERIES

	Group 1: Nonrecovery Batteries (10 batteries at 2 plants)	Group 2: Foundry By-Product Recovery Batteries (14 batteries at 6 plants)			Group 3: Furnace By-Product Recovery Batteries (44 batteries at 17 plants)			
		A	B	C	A	B	C	D
No. Of Batteries	10	3	8	3	14	19	8	3
Battery Condition	No costs for pushing or stacks; both generally low opacity	No significant costs for pushing or stacks	Will require baseline repair program.	Will require baseline repair program plus: 2 through-walls, 10 end flues, spray patching on 50% of ovens.	No significant costs for pushing or stacks	Will require baseline repair program.	No significant costs for pushing or stacks	Will require baseline repair program plus: 2 through-walls, 10 end flues, spray patching on 50% of ovens.
Height*	short	short		short	short		tall	short
Median No. of ovens	32	41		65	63		77	40
Median Coking Time (hrs)	48	27		24	19		18	28
Median Coke Production (tpy)	160,000	89,000		327,330	320,000		830,000	101,013

* “short” batteries have ovens 5 meters or less in height; “tall” batteries have ovens between 5 and 6 meters in height.

TABLE 4-2. PARAMETERS USED TO DEVELOP MODEL BATTERIES

Plant	Battery	No. of ovens	Height (m)	Coking time (hours)	Total Coke Production (tpy)
Non-Recovery Batteries					
Indiana Harbor Coke, East Chicago, IN	A	67	2.7	48	325,000
Indiana Harbor Coke, East Chicago, IN	B	67	2.7	48	325,000
Indiana Harbor Coke, East Chicago, IN	C	67	2.7	48	325,000
Indiana Harbor Coke, East Chicago, IN	D	67	2.7	48	325,000
Jewell Coke and Coal, Vansant, VA	2D	18	2.82	48	96,085
Jewell Coke and Coal, Vansant, VA	2E	27	2.82	48	144,127
Jewell Coke and Coal, Vansant, VA	3B	26	3.13	48	138,789
Jewell Coke and Coal, Vansant, VA	3C	36	3.13	48	192,169
Jewell Coke and Coal, Vansant, VA	3F	17	2.82	48	90,746
Jewell Coke and Coal, Vansant, VA	3G	18	2.82	48	96,085
average		***41***	***3***	***48***	***205,800***
median		***32***	***3***	***48***	***168,148***
By-Product Recovery Foundry Coke Batteries					
ABC Coke, Tarrant, AL	1A	78	5.0	26	571,730
ABC Coke, Tarrant, AL	5	25	4.0	26	107,700
ABC Coke, Tarrant, AL	6	29	4.0	26	124,700
Citizens Gas, Indianapolis, IN	E	47	3.5	30.5	114,206
Citizens Gas, Indianapolis, IN	H	41	3.5	30.5	99,876
Citizens Gas, Indianapolis, IN	1	72	5.0	26.5	473,582
Erie Coke, Erie, PA	A	23	3.5		60,577
Erie Coke, Erie, PA	B	35	3.5		92,182
Koppers, Monessen, PA	1B	37	4.0	17	248,134
Koppers, Monessen, PA	2	19	4.0	17	127,420
Shenango, Pittsburgh, PA	1	56	4.0	17.9	371,844
Sloss Industries, Birmingham, AL	3	30	3.7	21	135,736
Sloss Industries, Birmingham, AL	4	30	3.7	21	135,736
Sloss Industries, Birmingham, AL	5	60	3.7	31	192,834
average		***42***	***4***	***24***	***204,018***
median		***36***	***4***	***26***	***131,578***

TABLE 4-2. PARAMETERS USED TO DEVELOP MODEL BATTERIES (continued)

Plant	Battery	No. of ovens	Height (m)	Coking time (hours)	Total Coke Production (tpy)
By-Product Recovery Foundry Coke Batteries - no pushing emission control					
Gulf States Steel, Gadsden, AL	2	65	4.0	24	218,220
Gulf States Steel, Gadsden, AL	3	65	4.0	24	327,330
New Boston, Portsmouth, OH	2	70	4.0	17	340,500
average		***67***	***4***	***22***	***272,775***
median		***65***	***4***	***24***	***327,330***
By-Product Recovery Furnace Coke Batteries - short					
Acme Steel, Chicago, IL	1	50	4.0	19	256,784
Acme Steel, Chicago, IL	2	50	4.0	19	256,784
AK Steel, Ashland, KY	3	76	4.0	19.2	382,212
AK Steel, Ashland, KY	4	70	5.0	18.2	631,780
AK Steel, Middletown, OH	W	76	4.0	19.5	428,300
Bethlehem Steel, Lackawanna, NY	7	76	3.5	18.42	399,766
Bethlehem Steel, Lackawanna, NY	8	76	3.5	18.42	395,646
Geneva Steel, Provo, UT	1	63	4.0	17	202,108
Geneva Steel, Provo, UT	2	63	4.0	17.5	123,022
Geneva Steel, Provo, UT	3	63	4.0	17	237,258
Geneva Steel, Provo, UT	4	63	4.0	17	184,474
LTV Steel, Warren, OH	4	85	4.0	16.72	573,642
National Steel, Granite City, IL	A	45	4.0	15.9	296,248
National Steel, Granite City, IL	B	45	4.0	15.9	296,332
USS, Clairton, PA	1	64	3.6	18.8	331,202
USS, Clairton, PA	2	64	3.6	18.8	331,202
USS, Clairton, PA	3	64	3.6	18.8	331,202
USS, Clairton, PA	7	62	3.6	18.6	336,202
USS, Clairton, PA	8	64	3.6	18.6	336,202
USS, Clairton, PA	9	64	3.6	18.6	336,202
USS, Clairton, PA	13	61	3.6	18	336,420

TABLE 4-2. PARAMETERS USED TO DEVELOP MODEL BATTERIES (continued)

Plant	Battery	No. of ovens	Height (m)	Coking time (hours)	Total Coke Production (tpy)
USS, Clairton, PA	14	61	3.6	18	336,420
USS, Clairton, PA	15	61	3.6	18	336,420
USS, Clairton, PA	19	87	4.3	18.6	549,440
USS, Clairton, PA	20	87	4.3	18.6	549,440
USS, Gary, IN	5	77	3.0	19	269,549
USS, Gary, IN	7	77	3.0	19	284,919
Wheeling-Pitt, East Steubenville, WV	1	47	3.0	20.7	148,078
Wheeling-Pitt, East Steubenville, WV	2	47	3.0	20.7	148,078
Wheeling-Pitt, East Steubenville, WV	3	51	3.0	20.7	148,078
average		***65***	***4***	***18***	***325,780***
median		***64***	***4***	***19***	***331,202***
By-Product Recovery Furnace Coke Batteries - tall					
Bethlehem Steel, Burns Harbor, IN	1	82	6.0	18	898,701
Bethlehem Steel, Burns Harbor, IN	2	82	6.0	18	947,109
LTV Steel, Chicago, IL	2	60	6.0	18	631,530
National Steel, Ecorse, MI	5	85	6.0	18	981,608
USS, Clairton, PA	B	75	6.1	18	894,478
USS, Gary, IN	2	57	6.0	13	640,045
USS, Gary, IN	3	57	6.0	13	618,970
Wheeling-Pitt, East Steubenville, WV	8	79	6.0	18.1	901,942
average		***72***	***6***	***17***	***814,298***
median		***77***	***6***	***18***	***896,590***
By-Product Recovery Furnace Coke Batteries - no pushing emission control					
Empire Coke, Holt, AL	1	40	2.49	28	101,013
Empire Coke, Holt, AL	2	20	2.49	28	50,507
Tonawanda, Buffalo, NY	2	60	4.0	28	218,701
average		***40***	***3***	***28***	***370,221***
median		***40***	***2.49***	***28***	***101,013***

5. ENVIRONMENTAL IMPACTS

This chapter focuses on the environmental impacts associated with achieving the MACT level of control. The primary impact is the reduction of emissions of HAP when MACT is implemented. Secondary impacts, such as the generation of solid waste and increased energy usage, are also discussed. Emission reductions of HAP are expressed in terms of the listed HAP "coke oven emissions" which includes a variety of organic compounds. Methylene chloride extractables is used as a surrogate measure for coke oven emissions and includes organic particulate matter (semivolatile organics) such as POM and PAH.

5.1 DERIVATION OF EMISSION FACTORS FOR PUSHING

Coke oven emissions from pushing originate when coal has not been completely coked, which produces "green coke." During pushing green coke generates emissions of a variety of volatile and semivolatile organic compounds that are not captured or controlled effectively by pushing emissions' capture and control systems. Emissions from pushing depend on the frequency and extent that green pushes occur. Some of the best controlled batteries have very few green pushes, and others have higher levels as indicated by the high opacity of emissions that escape capture.

The EPA conducted tests of pushing emissions at Bethlehem Steel (Burns Harbor, IN)[1] and ABC Coke (Birmingham, AL)[2]. These two plants had very few green pushes during the tests; however, the results can be used to derive emission factors for green coke and coke that is not green. Because most of the emissions from green coke are not captured and controlled, the actual sampling results must be used in combination with estimates of capture efficiency and the number of green pushes observed during the test to derive emission factors.

Table 5-1 summarizes the results for the test conducted at Bethlehem Steel. There were three pushes during Runs 1 and 3 that were characterized as partially to moderately green (opacity on the order of 30% to 50% observed during the push) compared to six pushes of a similar nature during Run 2. The emissions of the pollutants of interest were highest during Run 2, which reflects the higher emissions from these moderately green pushes. For example, the

extractable organics during Run 2 were 0.0057 lb/ton compared to an average of 0.0045 lb/ton during Runs 1 and 3.

TABLE 5-1. PAH RESULTS FOR PUSHING -- BETHLEHEM, BURNS HARBOR[1]

		BAGHOUSE INLET (lb/ton)				BAGHOUSE OUTLET (lb/ton)			
	7 PAH	**Run 1**	**Run 2**	**Run 3**	**Average**	**Run 1**	**Run 2**	**Run 3**	**Average**
1	Benzo(a)anthracene	7.1E-07	5.7E-07	1.3E-07	4.7E-07	3.6E-08	2.4E-08	1.2E-08	2.4E-08
2	Benzo(a)pyrene	4.8E-07	3.2E-07	1.3E-07	3.1E-07	3.1E-08	1.5E-08	1.0E-08	1.9E-08
3	Benzo(b)fluoranthene	5.9E-06	6.1E-06	3.0E-06	5.0E-06	4.7E-08	3.4E-08	1.9E-08	3.4E-08
4	Benzo(k)fluoranthene	2.3E-06	2.3E-06	8.5E-07	1.8E-06	4.4E-08	1.8E-08	1.3E-08	2.5E-08
5	Chrysene	4.3E-06	4.4E-06	1.9E-06	3.6E-06	7.1E-08	7.6E-08	3.2E-08	6.0E-08
6	Dibenzo(a,h)anthracene	8.6E-07	8.1E-07	2.5E-07	6.4E-07	9.1E-09	0.0E+00	0.0E+00	3.0E-09
7	Ideno(1,2,3-cd)pyrene	2.1E-06	2.0E-06	4.6E-07	1.5E-06	4.1E-08	1.6E-08	1.3E-08	2.3E-08
	Total 7 PAH	**1.7E-05**	**1.7E-05**	**6.7E-06**	**1.3E-05**	**2.8E-07**	**1.8E-07**	**9.9E-08**	**1.9E-07**
	16 PAH								
8	Acenaphthene	5.4E-07	3.5E-07	5.4E-07	4.8E-07	9.1E-08	6.6E-08	4.9E-08	6.9E-08
9	Acenaphthylene	4.3E-06	4.4E-06	2.7E-06	3.8E-06	1.9E-07	1.5E-07	1.7E-07	1.7E-07
10	Anthracene	5.7E-07	5.1E-07	6.5E-07	5.8E-07	5.5E-08	2.1E-08	1.0E-08	2.8E-08
11	Benzo(g,h,i)perylene	1.7E-06	1.6E-06	3.3E-07	1.2E-06	9.1E-09	2.5E-09	3.3E-09	4.9E-09
12	Fluoranthene	1.1E-05	1.3E-05	6.8E-06	1.0E-05	3.1E-07	1.3E-07	7.6E-08	1.7E-07
13	Fluorene	1.7E-06	1.3E-06	1.3E-06	1.5E-06	1.9E-07	1.5E-07	1.0E-07	1.5E-07
14	Naphthalene	2.1E-05	2.6E-05	2.9E-05	2.5E-05	4.7E-06	4.8E-06	4.7E-06	4.7E-06
15	Phenanthrene	1.6E-05	1.9E-05	2.0E-05	1.8E-05	7.6E-07	5.2E-07	3.1E-07	5.3E-07
16	Pyrene	1.7E-06	1.9E-06	3.9E-07	1.3E-06	1.8E-07	9.8E-08	4.9E-08	1.1E-07
	Total 16 PAH	**7.4E-05**	**8.4E-05**	**6.9E-05**	**7.6E-05**	**6.8E-06**	**6.1E-06**	**5.5E-06**	**6.1E-06**
	Other PAH								
	2-Methylnaphthalene	6.2E-06	5.0E-06	3.1E-06	4.7E-06	1.0E-06	1.4E-06	8.6E-07	1.1E-06
	Benzo(e)pyrene	1.6E-06	1.4E-06	4.0E-07	1.1E-06	3.1E-08	1.8E-08	1.2E-08	2.0E-08
	Perylene	7.8E-08	0.0E+00	0.0E+00	2.6E-08	7.1E-09	7.1E-09	0.0E+00	4.7E-09
	Total Other PAH	**7.8E-06**	**6.4E-06**	**3.5E-06**	**5.9E-06**	**1.1E-06**	**1.4E-06**	**8.7E-07**	**1.1E-06**
	Total -- all PAH	**8.2E-05**	**9.0E-05**	**7.2E-05**	**8.2E-05**	**7.9E-06**	**7.5E-06**	**6.4E-06**	**7.3E-06**
	Extractable organics (lb/hr)	**4.9E-03**	**5.7E-03**	**4.0E-03**	**4.9E-03**	**3.1E-03**	**2.4E-03**	**2.7E-03**	**2.7E-03**
	Number of moderately green pushes	3	6	3					
	Number of nongreen pushes	43	41	39					
	Total number of pushes	46	47	42					
	Percent green	7	13	7					

The results for ABC Coke are given in Table 5-2 and show that there were 4 green pushes identified for each of the 3 runs. Most of these pushes were moderately green (in the range of 30% to 50% opacity); however, during Run 1, a severely green push was observed that had an opacity on the order of 95% during both the push and travel, and a yellow brown plume came from the quench tower during quenching. The oven that was pushed was adjacent to an oven that had been taken out of service for repair. The effect of this green push on the emissions is evident with emission levels two to three times higher for Run 1 than for the other runs. For example, extractable organics during Run 1 were 0.016 lb/ton compared to 0.0078 lb/ton during Runs 2 and 3.

TABLE 5-2. PAH RESULTS FOR PUSHING -- ABC COKE[2]

		BAGHOUSE INLET (lb/ton)				BAGHOUSE OUTLET (lb/ton)			
	7 PAH	**Run 1**	**Run 2**	**Run 3**	**Average**	**Run 1**	**Run 2**	**Run 3**	**Average**
1	Benzo(a)anthracene	2.3E-05	1.3E-05	1.5E-05	1.7E-05	4.7E-07	3.7E-07	3.7E-07	4.0E-07
2	Benzo(a)pyrene	9.8E-06	3.4E-06	2.4E-06	5.2E-06	0.0E+00	0.0E+00	0.0E+00	0.0E+00
3	Benzo(b)fluoranthene	2.6E-05	9.3E-06	8.2E-06	1.5E-05	3.3E-07	2.8E-07	3.3E-07	3.1E-07
4	Benzo(k)fluoranthene	1.4E-05	6.6E-06	4.9E-06	8.6E-06	3.3E-07	2.4E-07	2.2E-07	2.6E-07
5	Chrysene	4.0E-05	2.1E-05	2.4E-05	2.9E-05	1.2E-06	9.8E-07	1.1E-06	1.1E-06
6	Dibenzo(a,h)anthracene	0.0E+00	0.0E+00	0.0E+00	0.0E+00	0.0E+00	0.0E+00	0.0E+00	0.0E+00
7	Ideno(1,2,3-cd)pyrene	1.7E-05	7.7E-06	5.3E-06	1.0E-05	0.0E+00	0.0E+00	0.0E+00	0.0E+00
	Total 7 PAH	**1.3E-04**	**6.1E-05**	**6.0E-05**	**8.4E-05**	**2.3E-06**	**1.9E-06**	**2.0E-06**	**2.1E-06**
	16 PAH								
8	Acenaphthene	2.3E-05	7.7E-06	8.5E-06	1.3E-05	1.1E-05	3.8E-06	5.5E-06	6.9E-06
9	Acenaphthylene	1.4E-04	6.4E-05	4.5E-05	8.2E-05	8.1E-05	3.4E-05	2.7E-05	4.7E-05
10	Anthracene	2.5E-05	7.7E-06	1.2E-05	1.5E-05	3.3E-05	5.0E-06	8.0E-06	1.5E-05
11	Benzo(g,h,i)perylene	0.0E+00	0.0E+00	0.0E+00	0.0E+00	0.0E+00	0.0E+00	0.0E+00	0.0E+00
12	Fluoranthene	7.7E-05	3.2E-05	3.4E-05	4.8E-05	3.3E-05	5.0E-06	8.0E-06	1.5E-05
13	Fluorene	5.3E-06	2.9E-05	2.4E-05	1.9E-05	3.4E-05	1.1E-05	1.4E-05	2.0E-05
14	Naphthalene	5.6E-04	2.1E-04	2.2E-04	3.3E-04	4.7E-04	1.4E-04	1.7E-04	2.6E-04
15	Phenanthrene	2.5E-04	9.5E-05	8.9E-05	1.4E-04	1.1E-04	6.9E-05	4.2E-05	7.3E-05
16	Pyrene	5.1E-05	2.3E-05	2.4E-05	3.3E-05	2.6E-05	1.2E-05	1.0E-05	1.6E-05
	Total 16 PAH	**1.3E-03**	**5.3E-04**	**5.1E-04**	**7.7E-04**	**8.0E-04**	**2.9E-04**	**2.9E-04**	**4.6E-04**
	Other PAH								
	2-Methylnaphthalene	1.2E-04	4.3E-05	5.5E-05	7.2E-05	8.9E-05	3.7E-05	5.6E-05	6.1E-05
	Benzo(e)pyrene	1.0E-05	4.6E-06	4.5E-06	6.4E-06	2.1E-07	0.0E+00	1.7E-07	1.3E-07
	Perylene	1.7E-06	5.0E-07	3.8E-07	8.6E-07	0.0E+00	0.0E+00	0.0E+00	0.0E+00
	Total Other PAH	**1.3E-04**	**4.8E-05**	**6.0E-05**	**7.9E-05**	**9.0E-05**	**3.7E-05**	**5.6E-05**	**6.1E-05**
	Total -- all PAH	**1.4E-03**	**5.8E-04**	**5.7E-04**	**8.4E-04**	**8.9E-04**	**3.2E-04**	**3.4E-04**	**5.2E-04**
Extractable organics (lb/hr)		**1.6E-02**	**9.8E-03**	**5.8E-03**	**1.0E-02**	**2.4E-02**	**4.9E-03**	**2.4E-03**	**1.0E-02**
Number of severely green pushes		**1**	**0**	**0**					
Number of moderately green pushes		**3**	**4**	**4**					
Number of nongreen pushes		**17**	**17**	**18**					
Total number of pushes		**21**	**21**	**22**					
Percent green		**19**	**19**	**18**					

5.1.1 Derivation of an Emission Factor from the Bethlehem Steel Test Results

The Bethlehem Steel results were used to derive an emission factor for moderately green pushes. This estimate assumes a capture efficiency of 90% for non-green pushes and 40% for moderately green pushes. An example is given below for the extractable organics and involves solving two independent equations with two unknowns.

- During Run 2, six pushes were moderately green and 41 were not; the emission rate was 0.0057 lb/t.

- During Runs 1 and 3, three pushes were moderately green and 41 (average) were not; the emission rate averaged 0.0045 lb/t.

- Let "x" equal the emission factor for uncontrolled non-green pushes and "y" the emission factor for uncontrolled moderately green pushes.

Equations can be written for the test runs based on the number of each type of push and the capture efficiency for each type, which corresponds to what was captured and measured at the baghouse inlet. The equation for Run 2 (for extractable organics measured at the baghouse inlet) is:

$$[(41)(0.9)(x) + (6)(.4)(y)]/47 = 0.0057 \text{ lb/t}$$

or

$$36.9\,x + 2.4\,y = 0.27 \qquad \textit{Equation (1)}$$

The equation for Runs 1 and 3 is:

$$[(41)(0.9)(x) + (3)(.4)(y)]/44 = 0.0045 \text{ lb/t}$$

or

$$36.9\,x + 1.2\,y = 0.20 \qquad \textit{Equation (2)}$$

Solving the Equations (1) and (2) for x and y yields:

x = 0.0035 lb/t (uncontrolled non-green pushes)

y = 0.058 lb/t (uncontrolled moderately green pushes).

The procedure was repeated for the other pollutants of interest with the results in Table 5-3.

TABLE 5-3. EMISSION FACTORS FROM THE BETHLEHEM STEEL TEST

Pollutant	lb/t for non-green	lb/t for moderately green	Ratio
7 PAH	6.7×10^{-6}	2.3×10^{-4}	34
16 PAH	6.4×10^{-5}	6.7×10^{-4}	10
Extractable organics	3.5×10^{-3}	5.8×10^{-2}	16

The ratios in the table indicate that the emissions from moderately green pushes are on the order of 10 to 34 times higher than those of non-green pushes.

5.1.2 Derivation of an Emission Factor from the ABC Coke Test Results

An approach similar to that used for the Bethlehem Steel test was used to derive an estimate of the contribution of green pushes to overall emissions from the ABC Coke test. In this case, three equations and three unknowns were used for the 7-PAH and 16-PAH to derive emission factors for non-green, moderately green, and severely green pushes. An example is given below for the 7-PAH and assumes a capture efficiency of 90% for the non-green pushes, 40% for the moderately green pushes, and 10% for the severely green push.

- Let “x” equal the uncontrolled emissions in lb/ton for the non-green pushes.
- Let “y” equal the uncontrolled emissions in lb/ton for the moderately green pushes.
- Let “z” equal the uncontrolled emissions in lb/ton for the severely green push during Run 1.
- The emissions of 7-PAH were 1.3 E-4, 6.1 E-5, and 6.0 E-5 lb/ton for Runs 1, 2, and 3, respectively.

The equation for Run 1 with 17 non-green pushes, 3 moderately green pushes, and 1 severely green push is:

$$[(17)(0.9)(x) + (3)(0.4)(y) + (1)(0.1)(z)]/21 = 0.00013 \text{ lb/ton}$$

or

$$15.3\ x + 1.2\ y + 0.1\ z = 0.00273 \qquad \textit{Equation (1)}$$

The equation for Run 2 with 17 non-green pushes and 4 moderately green pushes is:

$$[(17)(0.9)(x) + (4)(0.4)(y)]/21 = 0.000061 \text{ lb/ton}$$

or

$$15.3\ x + 1.6\ y = 0.00128 \qquad \textit{Equation (2)}$$

The equation for Run 3 with 18 non-green pushes and 4 moderately green pushes is:

$$[(18)(0.9)(x) + (4)(0.4)(y)]/21 = 0.000060 \text{ lb/ton}$$

or

$$16.2\ x + 1.6\ y = 0.00126 \qquad \textit{Equation (3)}$$

Solving Equations (1), (2), and (3) for x, y, and z yields the following emission factors for the 7-PAH:

x = 4.3 E-5 for non-green pushes

y = 3.0 E-4 for moderately green pushes

z = 1.6 E-2 for severely green pushes.

The procedure was repeated to derive emission factors for the 16-PAH. This approach could not be used for the extractable organics for ABC Coke because of the anomalous results for Run 2, which appear to be high by a factor of two based on the 7-PAH and 16-PAH results. For example, the 16-PAH were 8% to 9% of the extractable organics for Runs 1 and 3 compared to about 5% for Run 2. A similar discrepancy is seen with the 7-PAH results. Consequently, emission factors for extractable organics were derived based on a ratio of 0.08 for 16-PAH:extractables. Results for both of the tests are summarized in Table 5-4.

TABLE 5-4. UNCONTROLLED EMISSION FACTORS FOR PUSHING (lb/ton coke)

Pollutant	Non-green		Moderately green		Severely green
	BSC	ABC	BSC	ABC	ABC
7-PAH	6.7 E-6	4.3 E-5	2.3 E-4	3.9 E-4	1.6 E-2
16-PAH	6.4 E-5	1.0 E-4	6.7 E-4	6.0 E-3	1.9 E-1
Extractables	3.5 E-3	1.3 E-3	5.8 E-2	7.5 E-2	2.3

5.1.3 Frequency of Green Pushes

Information on the frequency of green pushes at different batteries is needed to use the emission factors derived in the previous section. A model battery approach is developed here because pushing data are not available for every battery. Based on the data available, individual batteries are classified as: (1) batteries currently operate at the MACT level of control (Group 1), (2) batteries that will require moderate improvement to achieve MACT (Group 2), and (3) batteries that will have to achieve significant reductions in green pushes to achieve MACT (Group 3).

Data for several batteries show green pushes occur, even on batteries that are among the best controlled. However, severely green pushes with opacity greater than 50% are rare for well-controlled batteries. For example, our database shows that 16 well controlled batteries exceeded 50% opacity only once in 3,700 observations. For the model battery approach, we will use a conservative estimate of 0.5% severely green pushes for the Group 1 batteries (MACT level of control). For moderately green pushes in the range of 30% to 50% opacity, the well-controlled batteries averaged 0% to about 5% of the pushes in this range. We will use a conservative estimate of 5% green pushes for the Group 1 batteries.

Two batteries that are less well controlled (USS Clairton Batteries 19 and 20) averaged 2% of the pushes over 50% opacity. An estimate of 2% severely green pushes (over 50% opacity) was chosen for this analysis to develop conservative estimates of emissions for Group 2 batteries (moderate improvement required). For these same two batteries, about 15% of the pushes were in the range of 30% to 50% opacity (moderately green). Similarly, at Tonawanda

Coke about 20% of the pushes were in the range of 30% to 50% opacity. For this analysis, a conservative value of 20% moderately green pushes was used for Group 2 batteries.

Data for Gulf States Steel from the observation of 275 pushes were used to characterize the frequency of green pushes for Group 3 batteries. Approximately 20% of the pushes averaged over 50% opacity, and 35% were in the range of 30% to 50% opacity.

The distribution of pushes for the three groups is summarized in Table 5-5.

TABLE 5-5. DISTRIBUTION OF GREEN PUSHES FOR DIFFERENT GROUPS OF BATTERIES

Group	Percent of pushes in each category		
	Severely green	Moderately green	Non-green
1	0.5	5	94.5
2	2	20	78
3	20	35	45

5.1.4 Estimates of Nationwide Emissions

The approach to estimate nationwide emissions for pushes is based on developing emission factors for each type or group of battery, assigning each actual battery to one of the groups, and summing emissions across batteries. The average emission factors for extractable organics from the tests at ABC Coke and Bethlehem Steel are summarized in Table 5-6.

TABLE 5-6. AVERAGE UNCONTROLLED EMISSION FACTORS FOR PUSHING

Type	Extractable organics (lb/ton of coke)
Non-green	0.0024
Moderately green	0.067
Severely green	2.3

The emission estimates are based on the following assumptions:

! A non-green push is defined as one with an average opacity less than 30%, moderately green is 30% to less than 50%, and severely green is 50% or greater.

! For batteries that have capture and control, capture efficiencies are assumed to be 90% for non-green, 40% for moderately green, and 10% for severely green pushes.

! Emissions from the control device are estimated as 0.0064 lb/ton from the average of the test results at Bethlehem Steel and ABC Coke (0.0027 and 0.01 lb/ton, respectively).

An emission factor for the Group 1 batteries is estimated as follows:

(1) Emissions from non-green pushes:

Fraction non-green x emission factor for non-green pushes x fraction not captured =

0.945 x 0.0024 lb/ton x (1 - 0.9) = 0.0002 lb/ton

(2) Emissions from moderately green pushes:

Fraction moderately green x emission factor for moderately green pushes x fraction not captured

=

0.05 x 0.067 lb/ton x (1 - 0.6) = 0.0013 lb/ton

(3) Emissions from severely green pushes:

Fraction severely green x emission factor for severely green pushes x fraction not captured =

0.005 x 2.3 lb/ton x (1 - 0.1) = 0.010 lb/ton

(4) Emissions from the control device:

0.0064 lb/ton

(5) Total for Group 1:

0.0002 + 0.0013 + 0.010 + 0.0064 = 0.018 lb/ton.

A similar procedure was used for the other groups to develop the emission factors given in Table 5-7. Some batteries in Group 2 do not have capture and controls for pushing emissions; consequently, emission factors were developed for both the controlled and uncontrolled cases. None of the batteries in Group 3 have capture and control; therefore, only uncontrolled emission factors were developed for this group.

TABLE 5-7 PUSHING EMISSION FACTORS

Group	Extractable organic emissions (lb/ton)
1 - controlled	0.018
2 - controlled	0.053
2 - uncontrolled	0.061
3 - uncontrolled	0.48

Each battery was assigned to one of the groups listed in Table 5-7 based on pushing emissions data, a best guess when no data were available, and the presence or absence of a capture and control system. The emission factors were then applied to each plant to estimate emissions. The emission estimates, assignments, and emission factors are given in Table 5-8.

5.2 EMISSIONS FROM BATTERY STACKS

Estimates of emissions of extractable organics from battery stacks are based on the tests conducted by EPA. The test results are summarized in Tables 5-10 and 5-11 for Bethlehem Steel (Burns Harbor, IN) and ABC Coke (Birmingham, AL), respectively. The results are reasonably consistent except for Run 3 at Burns Harbor. This run had about 10 times more naphthalene and 3 times more extractable organics than the other runs. In addition, the extractable organics were 20 to 30 times higher at Bethlehem Steel, but the PAH were the same order of magnitude as at ABC Coke. These results indicate that extractable organics are not a good surrogate for POM for the Bethlehem test because it may include compounds that are not POM or PAH. Consequently, emission estimates for battery stacks are based on the test results for ABC Coke to avoid overestimating emissions if the Bethlehem Steel test results were used.

5.2.1 Relationship Between Opacity and Concentration

The theoretical relationship between opacity expressed as a fraction (Op) and mass concentration (C) is given by Equation 1[3, 4]:

$$\mathbf{C = - \ln (1.0 - Op)/constant} \qquad \textit{Equation (1)}$$

TABLE 5-8. NATIONWIDE ESTIMATES OF EXTRACTABLE ORGANICS EMISSIONS FROM PUSHING

No.	Plant	Coke (tpy)	Control?	Group	lb/ton	EXTRACTABLE ORGANICS (tpy)	
						BASELINE	After MACT
1	ABC Coke, Tarrant, AL	803369	Yes	1	0.018	7	7.2
2	Acme Steel, Chicago, IL	513568	Yes	1	0.018	4.6	4.6
3	AK Steel, Ashland, KY	1013992	Yes	2	0.053	26.9	9.1
4	AK Steel, Middletown, OH	428300	Yes	2	0.053	11.4	3.9
6	Bethlehem Steel, Burns Harbor, IN	1845810	Yes	1	0.018	16.6	16.6
7	Bethlehem Steel, Lackawanna, NY	795412	Yes	2	0.053	21.1	7.2
8	Citizens Gas, Indianapolis, IN	687664	Yes	2	0.053	18.2	6.2
9	Empire Coke, Holt, AL	151520	No	3	0.480	36.4	1.4
10	Erie Coke, Erie, PA	152759	Yes	2	0.053	4.0	1.4
11	Geneva Steel, Provo, UT	746862	Yes	2	0.053	19.8	6.7
12	Gulf States Steel, Gadsden, AL	545550	No	3	0.480	130.9	4.9
15	Koppers, Monessen, PA	375554	Yes	2	0.053	10.0	3.4
16	LTV Steel, Chicago, IL	631530	Yes	1	0.018	5.7	5.7
18	LTV Steel, Warren, OH	573642	Yes	1	0.018	5.2	5.2
19	National Steel, Ecorse, MI	981608	Yes	1	0.018	8.8	8.8
20	National Steel, Granite City, IL	592580	Yes	2	0.053	15.7	5.3
21	New Boston, Portsmouth,OH	340500	No	2	0.061	10.4	3.1
22	Shenango, Pittsburgh, PA	371844	Yes	2	0.053	9.9	3.3
23	Sloss Industries, Birmingham, AL	464306	Yes	2	0.053	12.3	4.2
24	Tonawanda, Buffalo, NY	218701	No	2	0.061	6.7	2.0
25	USS, Clairton, PA (1,2,3,7,8,9,13,14,15,B)	3900000	Yes	1	0.018	35.1	35.1
25	USS, Clairton, PA (19&20)	1100000	Yes	2	0.053	29.2	9.9
26	USS, Gary, IN	1813483	Yes	2	0.053	48.1	16.3
27	Wheeling-Pitt, East Steubenville, WV	1346176	Yes	2	0.053	35.7	12.1
TOTALS						**529.7**	**183.6**

TABLE 5-9. CONCENTRATION ADJUSTMENTS FOR OPACITY

Opacity (%)	-ln (1 - Opacity/100)	Ratio to 1.7% opacity
1.7	1.7	1
5	5.1	3
10	10.5	6.2
15	16	9.4

TABLE 5-10. TEST RESULTS FOR STACKS -- BETHLEHEM, BURNS HARBOR[1]

		EMISSIONS (lb/hr)			
	7 PAHs	**Run 1**	**Run 2**	**Run 3**	**Average**
1	Benzo(a)anthracene	5.5E-06	3.0E-06	7.4E-06	5.3E-06
2	Benzo(a)pyrene	5.8E-06	2.9E-06	3.3E-06	4.0E-06
3	Benzo(b)fluoranthene	9.3E-06	5.5E-06	6.6E-06	7.1E-06
4	Benzo(k)fluoranthene	6.1E-06	3.8E-06	4.0E-06	4.6E-06
5	Chrysene	1.5E-05	7.2E-06	1.6E-05	1.3E-05
6	Dibenzo(a,h)anthracene	1.5E-06	0.0E+00	0.0E+00	4.9E-07
7	Ideno(1,2,3-cd)pyrene	5.4E-06	3.9E-06	3.6E-06	4.3E-06
	Total 7 PAHs	**4.8E-05**	**2.6E-05**	**4.1E-05**	**3.9E-05**
	16 PAHs				
8	Acenaphthene	2.3E-05	1.3E-05	4.6E-05	2.8E-05
9	Acenaphthylene	1.2E-04	3.5E-05	2.7E-04	1.4E-04
10	Anthracene	6.3E-06	2.4E-06	8.9E-06	5.8E-06
11	Benzo(g,h,i)perylene	1.0E-05	9.5E-06	6.5E-06	8.6E-06
12	Fluoranthene	5.3E-05	2.7E-05	6.4E-05	4.8E-05
13	Fluorene	1.0E-04	2.8E-05	1.3E-04	8.7E-05
14	Naphthalene	1.3E-03	3.7E-03	1.9E-02	7.8E-03
15	Phenanthrene	1.9E-04	8.6E-05	1.7E-04	1.5E-04
16	Pyrene	2.1E-05	9.7E-06	2.3E-05	1.8E-05
	Total 16 PAHs	**1.9E-03**	**3.9E-03**	**1.9E-02**	**8.4E-03**
	Other PAHs				
	2-Methylnaphthalene	7.1E-04	2.4E-04	8.4E-04	6.0E-04
	Benzo(e)pyrene	5.2E-06	3.9E-06	3.5E-06	4.2E-06
	Perylene	1.5E-06	0.0E+00	0.0E+00	4.9E-07
	Total Other PAHs	**7.1E-04**	**2.4E-04**	**8.4E-04**	**6.0E-04**
	Total -- all PAHs	**2.6E-03**	**4.2E-03**	**2.0E-02**	**9.0E-03**
	Extractable Organics (lb/hr)	**4.5**	**3.7**	**12.4**	**6.9**
	Average Opacity (%)	**4.7**	**5.8**	**4.7**	**5.1**

TABLE 5-11. TEST RESULTS FOR STACKS -- ABC COKE[2]

		EMISSIONS (lb/hr)				
	7 PAHs	**Run 1**	**Run 2**	**Run 3**	**Run 4**	**Average**
1	Benzo(a)anthracene	8.6E-06	4.7E-06	0.0E+00	7.2E-06	5.1E-06
2	Benzo(a)pyrene	1.2E-05	9.9E-06	0.0E+00	7.7E-06	7.5E-06
3	Benzo(b)fluoranthene	1.5E-05	2.0E-05	1.1E-05	1.3E-05	1.4E-05
4	Benzo(k)fluoranthene	0.0E+00	1.2E-07	0.0E+00	1.4E-07	6.4E-08
5	Chrysene	2.0E-05	2.2E-05	1.5E-05	2.5E-05	2.0E-05
6	Dibenzo(a,h)anthracene	0.0E+00	0.0E+00	0.0E+00	0.0E+00	0.0E+00
7	Ideno(1,2,3-cd)pyrene	0.0E+00	0.0E+00	0.0E+00	0.0E+00	0.0E+00
	Total 7 PAHs	**5.6E-05**	**5.6E-05**	**2.5E-05**	**5.3E-05**	**4.7E-05**
	16 PAHs					
8	Acenaphthene	1.5E-05	1.1E-05	6.0E-06	1.2E-05	1.1E-05
9	Acenaphthylene	8.6E-04	3.2E-03	6.5E-04	0.0E+00	1.2E-03
10	Anthracene	3.3E-07	4.1E-07	1.1E-05	3.6E-07	3.0E-06
11	Benzo(g,h,i)perylene	0.0E+00	0.0E+00	0.0E+00	0.0E+00	0.0E+00
12	Fluoranthene	2.9E-04	5.6E-04	2.4E-04	3.4E-04	3.6E-04
13	Fluorene	5.0E-05	3.2E-05	1.8E-05	6.3E-05	4.1E-05
14	Naphthalene	5.3E-03	6.1E-03	3.8E-03	4.8E-03	5.0E-03
15	Phenanthrene	5.9E-04	9.4E-04	4.9E-04	8.5E-05	5.3E-04
16	Pyrene	1.5E-04	9.9E-04	1.7E-04	2.2E-04	3.8E-04
	Total 16 PAHs	**7.3E-03**	**1.2E-02**	**5.4E-03**	**5.5E-03**	**7.5E-03**
	Other PAHs					
	2-Methylnaphthalene	1.5E-04	1.1E-04	7.9E-05	2.1E-04	1.4E-04
	Benzo(e)pyrene	1.6E-05	6.6E-05	1.8E-05	1.4E-05	2.8E-05
	Perylene	0.0E+00	0.0E+00	0.0E+00	0.0E+00	0.0E+00
	Total Other PAHs	**1.7E-04**	**1.8E-04**	**9.7E-05**	**2.2E-04**	**1.7E-04**
	Total -- all PAHs	**7.5E-03**	**1.2E-02**	**5.5E-03**	**5.7E-03**	**7.7E-03**
	Extractable Organics (lb/hr)	**0.23**	**0.20**	**0.36**	**0.09**	**0.22**
	Average Opacity (%)	**1.8**	**1.6**	**2.8**	**0.7**	**1.7**

By applying Taylor's expansion, the equation reduces to a linear relationship between opacity and concentration for dilute concentrations (low opacities):

$$\mathbf{C = constant \times Op.} \qquad \textit{Equation (2)}$$

The stack opacity at ABC Coke averaged only 1.7%; consequently, an adjustment must be made when extrapolating the results to batteries with higher opacities to reflect the higher concentrations. The concentration adjustments for batteries with opacities of 5%, 10%, and 15% are given in Table 5-9 and are based on the relationship in Equation 1.

For example, if the ABC Coke test results are extrapolated to a battery with 15% opacity, the ABC Coke emission rate is multiplied by 9.4 to adjust for the higher concentration when the opacity is 15%.

5.2.2 Adjustment for Volumetric Flow Rate

The adjustment for opacity corrects the mass concentration. However, the mass emission rate is the product of concentration and volumetric flow rate. Therefore, an adjustment must be made for volumetric flow rate when extrapolating the results to another battery. For example, the volumetric flow rate at ABC Coke was 83,000 acfm. If the results are used to estimate mass emissions from a battery with a stack flow rate of 150,000 acfm, the mass emission rate (in lb/hr) for ABC Coke are multiplied by 150,000/83,000 or 1.8.

5.2.3 Extrapolation to Other Batteries

Information on stack opacity and volumetric flow rate are needed to extrapolate the results from the test at ABC Coke to other batteries. Data are available on stack gas flow rate from an EPA survey of the industry. However, only limited data are available on stack opacity. Table 5-12 summarizes the average stack opacity from batteries that provided data collected by COMS. These data are used to develop typical opacity levels for two conditions: (1) the baseline level with no MACT standard and (2) the level after MACT is in place. For this analysis, a typical value of 10% is used as the baseline for batteries not at the MACT level based on the range of 7.5% to 10.5% at USS Gary.

The results in Table 5-12 for the USS Clairton and Bethlehem Steel (Burns Harbor) batteries are used to estimate the level achievable by MACT. The average opacity ranges from 1.5% to 4.5%. For this analysis, a conservative estimate of 5% opacity is used to estimate the performance level that will be achieved by MACT.

An example calculation is given below for Acme Steel Battery 1 with an assumed baseline opacity of 10% and a volumetric flow rate of 30,000 cfm.

0.22 lb/hr (ABC)x 6.2 (adjustment for 10% opacity)x[(30,000 acfm)÷(ABC acfm of 83,000)] = 0.49 lb/hr = 2.2 tpy

A similar procedure was used for the other batteries to give the results shown in Table 5-13.

TABLE 5-12. SUMMARY OF BATTERY STACK OPACITY DATA

Plant	**Battery**	**Average opacity (%)**	**Dates**
USS Gary	2	10.5	3/97 through 6/98
	3	8.8	3/97 through 6/98
	5	7.5	3/97 through 6/98
	7	9.6	3/97 through 6/98
Range (baseline before MACT)		7.5 to 10.5	
USS Clairton	13	2.1	1/99 through 3/99
	14	1.8	1/99 through 3/99
	15	2.9	1/99 through 3/99
	20	1.5	1/99 through 3/99
	B	4.3	1/99 through 3/99
Bethlehem, Burns Harbor	1	4.5	8/93 through 7/99
	2	3.8	12/94 through 7/99
Range (after MACT)		1.5 to 4.5	

TABLE 5-13. ESTIMATES OF EXTRACTABLE ORGANIC EMISSIONS FROM BATTERY STACKS

Plant	Battery	Stack gas flow rate (acfm)	Extractable organic emissions (tpy)	
			Baseline	After MACT
ABC Coke, Tarrant, AL	5 & 6	185,000	6.4	6.4
ABC Coke, Tarrant, AL	1A	187,000	13.5	6.5
Acme Steel, Chicago, IL	1	30,000	2.2	1.0
Acme Steel, Chicago, IL	2	30,000	2.2	1.0
AK Steel, Ashland, KY	3	70,900	5.1	2.5
AK Steel, Ashland, KY	4	185,100	13.3	6.4
AK Steel, Middletown, OH	W	137,400	9.9	4.8
Bethlehem Steel, Burns Harbor, IN	1	226,000	7.9	7.9
Bethlehem Steel, Burns Harbor, IN	2	164,000	5.7	5.7
Bethlehem Steel, Lackawanna, NY	7	209,869	15.1	7.3
Bethlehem Steel, Lackawanna, NY	8	176,013	12.7	6.1
Citizens Gas, Indianapolis, IN	E	25,000	1.8	0.9
Citizens Gas, Indianapolis, IN	H	25,000	1.8	0.9
Citizens Gas, Indianapolis, IN	1	37,200	2.7	1.3
Empire Coke, Holt, AL	1, 2	94,545	6.8	3.3
Erie Coke, Erie, PA	A, B	37,900	2.7	1.3
Geneva Steel, Provo, UT	1	80,000	5.8	2.8
Geneva Steel, Provo, UT	2	83,000	6.0	2.9
Geneva Steel, Provo, UT	3	100,000	7.2	3.5
Geneva Steel, Provo, UT	4	110,000	7.9	3.8
Gulf States Steel, Gadsden, AL*	2	100,000	7.2	3.5
Gulf States Steel, Gadsden, AL*	3	100,000	7.2	3.5
Koppers, Monessen, PA	1B	37,645	2.7	1.3
Koppers, Monessen, PA	2	19,196	1.4	0.7
LTV Steel, Chicago, IL	2	94,280	6.8	3.3
LTV Steel, Warren, OH	4	187,170	13.5	6.5
National Steel, Ecorse, MI	5	343,000	24.7	11.9
National Steel, Granite City, IL	A	83,700	6.0	2.9
National Steel, Granite City, IL	B	103,700	7.5	3.6
New Boston, Portsmouth, OH*	2	35,000	2.5	1.2
Shenango, Pittsburgh, PA	1	101,000	7.3	3.5
Sloss Industries, Birmingham, AL*	3 & 4	85,000	6.1	3.0
Sloss Industries, Birmingham, AL*	5	85,000	6.1	3.0
Tonawanda, Buffalo, NY	2	97,000	7.0	3.4
USS, Clairton, PA	1	82,100	2.9	2.9
USS, Clairton, PA	2	90,750	3.2	3.2
USS, Clairton, PA	3	74,150	2.6	2.6

TABLE 5-13. ESTIMATES OF EXTRACTABLE ORGANIC EMISSIONS FROM BATTERY STACKS (continued)

Plant	Battery	Stack gas flow rate (acfm)	Extractable organic emissions (tpy)	
			Baseline	After MACT
USS, Clairton, PA	7	79,950	2.8	2.8
USS, Clairton, PA	8	86,700	3.0	3.0
USS, Clairton, PA	9	88,700	3.1	3.1
USS, Clairton, PA	13	71,600	2.5	2.5
USS, Clairton, PA	14	76,000	2.6	2.6
USS, Clairton, PA	15	74,600	2.6	2.6
USS, Clairton, PA	19	149,000	5.2	5.2
USS, Clairton, PA	20	133,000	4.6	4.6
USS, Clairton, PA	B	207,500	7.2	7.2
USS, Gary, IN	2	116,908	8.4	4.1
USS, Gary, IN	3	179,959	13.0	6.3
USS, Gary, IN	5	67,824	4.9	2.4
USS, Gary, IN	7	80,070	5.8	2.8
Wheeling-Pittsburgh, East Steubenville, WV*	1	37,000	2.7	1.3
Wheeling-Pittsburgh, East Steubenville, WV*	2	37,000	2.7	1.3
Wheeling-Pittsburgh, East Steubenville, WV*	3	37,000	2.7	1.3
Wheeling-Pittsburgh, East Steubenville, WV*	8	164,000	11.8	5.7
TOTALS			**337**	**195**

* Volumetric flow rate was estimated from the industry average of 0.3 acfm/tpy coke.

5.3 EMISSIONS FROM QUENCHING

5.3.1 HAP Data for Quenching

The most useful test report for quenching was from testing performed at US Steel's coke plant in Lorain, Ohio, in 1977 by York Research under contract to EPA.[5] The testing included 15 runs (four to six quenches per run)-- six runs for quenching using clean quench water with non-green coke, five with clean water when green coke was quenched, and four using contaminated water (flushing liquor from the byproduct plant) with non-green coke. The analyses focused on organic compounds, especially PAH; results were also obtained for BSO, PM, and benzene.

The test results are summarized in Table 5-14. The major HAP were PAH, including BaP, both of which are indicators of coke oven emissions. The PAH found in the greatest quantity was naphthalene. Dirty water (from the coke by-product plant) was the major contributor to emissions of organic compounds during quenching; however, most plants no longer use contaminated water. Grab samples taken for benzene showed low levels of 0.01 to 0.13 g/Mg of coal (0.005 to 0.04 ppm); total hydrocarbons ranged from 30 to 60 g/Mg (8.5 to 17 ppm).

The report indicated that a great deal of effort went into identifying and trying to solve potential sampling problems, including the use of a high volume sampler (because of the short duration of quenches), obtaining a velocity profile (velocity varies with time), using a sorbent trap in the back half of the train to capture organics, and training of observers to identify and grade green pushes. However, some reviewers commented that the PM results are not representative of most quench towers and should be used only for tall quench towers. The Lorain tower was very tall (sampling was performed 95 feet above the ground), it had missing baffles, and the steam plume velocity was higher.

The test report confirmed that the PM emissions contained more larger particles, captured in the cyclone that preceded the filter, than had been seen in previous tests. This probably resulted from an open area where baffles were missing. However, the report noted that the PAH were almost all found in the sorbent trap, which indicated that they were in vapor form or were particles less than 0.3 microns. Consequently, the concerns expressed about the PM do not

TABLE 5-14. RESULTS OF QUENCH TOWER EMISSION TESTS AND WATER ANALYSES[5]

Pollutant	Quench tower emissions (g/Mg coal)[a]			Quench water analyses (g/Mg coal)			
	Clean water		Dirty water	Clean water		Dirty water	
	Non-green pushes	Green pushes	Non-green pushes	Supply	Nozzle[b]	Flushing liquor	Nozzle[b]
7 PAH	0.11	0.22	3.6	0.052	0.011	3.2	1.2
16 PAH	0.29	0.68	27	0.057	0.029	12.3	4.2
Total PAH	0.42	1.17	32.1	0.081	0.033	16.6	6.0
BaP[c]	0.024	0.012	0.081	--	0.016	0.18	0.27
PM	790	620	1,100	--	--	--	--
Aniline	0.0008	0.0005	2.8	--	--	1.8	0.54
Phenol	0.4	0.8	243	--	--	1.7	1.4
Toluidine	0.0004	--	1.0	--	--	1.2	0.11

Abbreviations: PAH=polycyclic aromatic hydrocarbons, BaP=benzo(a)pyrene, PM=particulate matter.
[a] Divide by 500 (or multiply by 0.002) to convert to lb/ton of coal.
[b] Water sprayed on the coke; sample taken at the nozzle
[c] Results based on a special analysis with high sensitivity for BaP, a traditional indicator for coke oven emissions.

apply to the organics. In summary, the test report provides the only useful information found with which to estimate HAP emissions from quenching.

5.3.2 Extrapolation to Other Batteries

The estimates of quenching emissions are based on the EPA tests at the USS Lorain coke plant and the results for the 16-PAHs in Table 5-14. The 16-PAH are assumed to be 8% of the EOM based on the pushing test results for ABC Coke:

For non-green pushes and clean water:

16-PAH (lb/ton coal) = 0.29 g/Mg x 0.002 (g/Mg to lb/ton) = 0.00058

EOM (lb/ton coal) = 0.00058 ÷ 0.08 = 0.007

For green pushes and clean water:

16-PAH (lb/ton coal) = 0.68 g/Mg x 0.002 (g/Mg to lb/ton) = 0.0014

EOM (lb/ton coal) = 0.0014 ÷ 0.08 = 0.018

Factor for pushes not severely green (lb/ton coal)		**Factor for severely green pushes (lb/ton coal)**	
16-PAH	EOM	16-PAH	EOM
0.00058	0.007	0.0014	0.018

The estimates in Section 5.1 (Pushing Emissions) used values of 0.5%, 2% and 20% for severely green pushes for Groups 1, 2, and 3. The same group assignments were used in Table 5-15 to estimate emissions from quenching. An example calculation is given below for ABC Coke assuming 0.5% of the pushes are severely green:

(0.007 lb/ton x 0.995 + 0.018 lb/ton x 0.005) x 1,160,000 tpy x 1 ton/2,000 lb = 4.1 tpy.

[99.5% not severely green][0.5% severely green][coal usage] [lbs to tons]

TABLE 5-15. ESTIMATES OF EXTRACTABLE ORGANIC EMISSIONS FROM QUENCHING

No.	Plant	Coke (tpy)	Coal (tpy)*	Percent Severely Green	lb/ton	EXTRACTABLE ORGANICS (tpy)	
						BASELINE	After MACT
1	ABC Coke, Tarrant, AL	803,369	1,164,303	0.5	7.06e-3	4.1	4.1
2	Acme Steel, Chicago, IL	513,568	744,301	0.5	7.06e-3	2.6	2.6
3	AK Steel, Ashland, KY	1,013,992	1,469,554	2	7.22e-3	5.3	5.2
4	AK Steel, Middletown, OH	428,300	620,725	2	7.22e-3	2.2	2.2
6	Bethlehem Steel, Burns Harbor, IN	1,845,810	2,675,087	0.5	7.06e-3	9.4	9.4
7	Bethlehem Steel, Lackawanna, NY	795,412	1,152,771	2	7.22e-3	4.2	4.1
8	Citizens Gas, Indianapolis, IN	687,664	996,614	2	7.22e-3	3.6	3.5
9	Empire Coke, Holt, AL	151,520	219,594	20	9.2e-3	1.0	0.8
10	Erie Coke, Erie, PA	152,759	221,390	2	7.22e-3	0.8	0.8
11	Geneva Steel, Provo, UT	746,862	1,082,409	2	7.22e-3	3.9	3.8
12	Gulf States Steel, Gadsden, AL	545,550	790,652	20	9.2e-3	3.6	2.8
15	Koppers, Monessen, PA	375,554	544,281	2	7.22e-3	2.0	1.9
16	LTV Steel, Chicago, IL	631,530	915,261	0.5	7.06e-3	3.2	3.2
18	LTV Steel, Warren, OH	573,642	831,365	0.5	7.06e-3	2.9	2.9
19	National Steel, Ecorse, MI	981,608	1,422,620	0.5	7.06e-3	5.0	5.0
20	National Steel, Granite City, IL	592,580	858,812	2	7.22e-3	3.1	3.0
21	New Boston, Portsmouth,OH	340,500	493,478	2	7.22e-3	1.8	1.7
22	Shenango, Pittsburgh, PA	371,844	538,904	2	7.22e-3	1.9	1.9
23	Sloss Industries, Birmingham, AL	464,306	672,907	2	7.22e-3	2.4	2.4
24	Tonawanda, Buffalo, NY	218,701	316,958	2	7.22e-3	1.1	1.1
25	USS, Clairton, PA (1,2,3,7,8,9,13,14,15,B)	3,900,000	5,652,174	0.5	7.06e-3	20.0	20.0
25	USS, Clairton, PA (19&20)	1,100,000	1,594,203	2	7.22e-3	5.8	5.6
26	USS, Gary, IN	1,813,483	2,628,236	2	7.22e-3	9.5	9.3
27	Wheeling-Pitt, East Steubenville, WV	1,346,176	1,950,980	2	7.22e-3	7.0	6.9
TOTALS						**106.6**	**104.3**

* Estimate based on a typical yield of 0.69 ton of coke per ton of coal.

5.4 OTHER ENVIRONMENTAL IMPACTS

The bulk of this chapter focuses on emissions and reductions associated with coke oven emissions with methylene chloride extractables as a surrogate measure. The extractable organics represent organic PM, and VOC are not included in the extractable organics. Although no data are available to quantify these volatiles, benzene, toluene, xylene and other hazardous volatile organics are known to be present in coke oven emissions. MACT will reduce emissions of these volatile HAP as well as the extractables (POM and PAH). MACT will also achieve reductions in total PM.

For battery stacks, MACT is achieved through pollution prevention techniques such as sealing cracks in oven walls, repairing damaged ovens, and other work practices that reduce the amount of coke oven gas leaking through the walls. Similarly, MACT for pushing focuses on preventing green pushes, and if they occur, taking corrective actions to prevent their reoccurrence. Consequently, these pollution prevention measures do not result in any significant secondary impacts, such as the generation of solid waste, wastewater, or increased usage of energy.

5.5 REFERENCES

1. Report, Emissions Testing of Combustion Stack and Pushing Operations at Coke Battery No. 2 at Bethlehem Steel Corporation's Burns Harbor Division in Chesterton, Indiana, EPA-454/R-99-001a, February 1999.

2. Report, Emissions Testing of Combustion Stack and Pushing Operations at Coke Battery No. 5/6 at ABC Coke in Birmingham, Alabama,, EPA-454/R-99-002a, February 1999.

3. Report, Study on Benefits of Continuous Opacity Monitors Applied to Portland Cement Kilns-- Chapter 3: Relationships Between Opacity and Concentration of Particulate Emissions, EPA, May 15, 1991.

4. Report, Investigation of Opacity and Particulate Mass Concentrations from Hot Metal Operations, prepared by David Ensor for EPA, September 1981.

5. Report, Coke Quench Tower Emission Testing Program, EPA-600/2-79-082, April 1979.

6. COSTS

6.1 APPROACH

The costs for individual batteries to achieve the MACT level of control will vary depending on the battery condition and control equipment in place. There is uncertainty in determining exactly what costs will be incurred by each battery. Consequently, several model batteries were developed to represent the range of battery types and conditions to place bounds on the probable costs. The emission control programs and equipment in place at the best controlled batteries were investigated, and the associated costs were obtained. The costs were then applied to the model batteries to estimate the cost that would be incurred to improve performance to the MACT level. A model battery was assigned to each actual battery based on available emissions data, knowledge of battery condition, and engineering judgement. Errors in underestimating and overestimating costs for individual batteries will tend to cancel when summing these costs to estimate total nationwide costs.

6.2 COSTS FOR MACT PERFORMANCE

MACT involves a routine program of systematic operation and maintenance and oven repairs to control emissions from battery stacks and pushing. An important element of this routine program for battery stacks is the use of COMS. In addition, control of quenching emissions will require the installation of baffles in three quench towers that do not have them.

Several plants were surveyed to obtain cost information on the technologies described in Chapter 3. Basic oven repairs include spray patching, ceramic welding, mobile gunning, silica dusting, end flue repairs, and through wall brickwork. Oven repair (i.e., spray patching, ceramic welding, mobile gunning, silica dusting, end flue repairs, and through wall brickwork) costs are summarized in Tables 6-1 through 6-4. An annual baseline program of oven repairs was developed from the frequency of oven repairs at USS Clairton Works and includes spray patching, end flue repairs, and through wall repairs (see Section 6.4.1). Table 6-5 provides costs

TABLE 6-1. SPRAY PATCHING (INCLUDING CERAMIC WELDING AND MOBILE GUNNING)

Plant	No. of ovens per year	Average annual labor costs over last 5 years	Average annual materials costs over last 5 years	Average total cost per year	Average total cost per oven
ABC Coke[1]	--	170,000	16,000	186,000	--
AK Steel[2]	1,752	178,000	145,000	323,000	184
Geneva Steel[a, 3]	103	5,970	4,240	10,200	99
USS Clairton[a, 4]	14,184	1,270,000	115,000	1,380,000	97
Geneva Steel[b, 3]	151	13,100	10,300	23,400	155
USS Clairton[b, 4]	275	192,000	13,400	205,000	745
ABC Coke[c, 1]	--	126,000	80,300	206,000	--
Geneva Steel[c, 3]	36	1,570,000	2,280,000	3,900,000	107,000
USS Clairton[c, 4]	252	207,000	264,000	471,000	1,870

[a] reported costs for spray patching
[b] reported costs for mobile gunning
[c] reported costs for ceramic welding

TABLE 6-2. SILICA DUSTING

Plant	No. of ovens per year	Average annual labor costs over last 5 years	Average annual materials costs over last 5 years	Average total cost per year	Average total cost per oven
ABC Coke[1]	--	170,000	23,900	194,000	--
USS Clairton[4]	410	42,000	42,500	84,500	206

TABLE 6-3. END FLUE REPAIRS

Plant	Brief description	Average annual costs over last 5 years	Average cost per repair
ABC Coke[1]	Average 5-6 repairs per year.	926,000	168,000
USS Clairton[4]	Average 8 repairs per year.	217,000	27,000

TABLE 6-4. THROUGH-WALL BRICKWORK

Plant	Brief description	Average annual cost over last 5 years	Average cost per wall
ABC Coke[1]	Average 0.8 walls per year	379,000	474,000
Citizen's Gas, Indianapolis[5]	Average 4 ovens replaced per year.	4,050,000[a]	1,010,000
USS Clairton[4]	Average 2.2 walls per year	3,840,000	1,750,000
USS Gary[4]	Average 10.2 walls per year	11,700,000	1,150,000

[a]Average over last 2 years.

TABLE 6-5. CONTINUOUS OPACITY MONITORS

Plant	Brief description	Total capital costs	Capital cost per stack	Total annual operating costs	Annual operating cost per stack
Citizen's Gas[5]	Purchase and installation of COM on Battery 1.	26,900	26,900	13,300	13,300
USS Clairton[4]	Average cost of COM installation and maintenance for all 12 batteries (3 generations; total was divided by 3).	573,000	47,800	31,000	2,580

TABLE 6-6. BAFFLE INSTALLATION

Plant	Brief description	Total capital costs	Cost per battery
Indiana Harbor Coke[6]	60' wood quench tower and double-row baffles serving Batteries A, B, C, and D.	1,060,000	265,000
Acme Steel, Chicago[7]	"A" frame wood baffle system with water spray system.	139,000	69,300

of COMs, and Table 6-6 summarizes the costs of installing baffles. All costs have been indexed to 1998 dollars.

Another element of the cost of MACT is monitoring, which includes the observation of four pushes per battery per day and bag leak detection systems for batteries that control pushing emissions with baghouses. The average time to observe four pushes is estimated to be about one hour, allowing for some delays and time for the observer to get into position. (For batteries operated as three in a battery unit, the time may be as short as 15 to 20 minutes, and for some foundry batteries, the observation time may be 1.5 hours or more.) Two hours per plant are allowed for observer travel time and data reduction. For a typical inspection labor charge of $30/hour, the inspection cost per plant per year would be:

$/yr = 365 days/yr * $30/hr * [1 hr/battery * number of batteries + 2 hr/plant * 1 plant] =

$11,000 * number of batteries + $22,000

The installed capital cost for bag leak detectors provided by vendors is $9,000 per baghouse. Annual operation and maintenance costs are estimated to be $500/yr per detector.

6.3 COSTS FOR MODEL BATTERIES

The model batteries are described in Table 6-7. Two groups are defined: one to represent foundry coke by-product batteries and one to represent furnace coke by-product batteries. These groups are further subdivided into models that represent different battery conditions that affect emissions and the cost to improve emission control. For example, Group A represents batteries that already achieve the MACT level of control and will not incur significant additional

expenses. Group B represents batteries that must implement a baseline program similar to that at the MACT batteries, but will not incur significant capital investment. Group C represents batteries that will incur capital expenses to repair and upgrade oven walls and end flues, and in addition, must implement a baseline program of continuing diagnostics and repair. The Group E batteries in the furnace coke group represent the newer 6-meter batteries that are generally in a state of good repair. The cost elements associated with the model batteries are given below:

1. Model Battery Groups A and D - MACT batteries: no significant additional repair costs.

2. Model Battery Group B - Must implement a baseline program like the one at USS Clairton.

3. Model Battery Group C - Must implement a baseline program like the one at USS Clairton plus additional one time repairs and rebuilds to put them on par with the Group B batteries: assume spray patching of 50% of the ovens, 2 through-wall repairs, and 10 end flue repairs per battery. These repairs will be treated as a capital cost.

4. Monitoring - all groups: cost of COM for those batteries that do not have one and cost of observing 4 pushes per day for those not already doing it; bag leak detection system for plants with baghouses. These cost will be assigned on a battery specific basis.

5. Quenching - apply the cost of baffles to those plants that do not have them. These costs will also be assigned on a battery specific basis.

6.4 DEVELOPMENT OF COSTS FOR THE MODEL BATTERIES

The USS Clairton Works is used as the baseline for oven maintenance to prevent green pushes and to control battery stack emissions because most of these batteries represent the MACT level of control. They provided detailed cost information on their oven maintenance and repair program in the cost survey. The costs below are based on the 812 ovens in the 12 batteries at USS Clairton Works.

TABLE 6-7. MODEL BATTERIES

	Foundry By-Product Recovery Batteries (12 batteries at 6 plants)			Furnace By-Product Recovery Batteries (46 batteries at 17 plants)			
	1A	1B	1C	2A	2B	2C	2D
Battery Condition	No significant costs for pushing or stacks	Will require baseline repair program.	Will require baseline repair program plus: 2 through-walls, 10 end flues, spray patching on 50% of ovens.	No significant costs for pushing or stacks	Will require baseline repair program.	Will require baseline repair program plus: 2 through-walls, 10 end flues, spray patching on 50% of ovens.	No additional costs for pushing or stacks
No. of ovens	41		65	63		40	77
Height (m)	4		4	4		4	6
Coking Time (hrs)	27		24	19		28	18
Coke Production (tpy)	89,000		327,000	320,000		101,000	830,000

The total cost per year of a baseline oven maintenance and repair program is **$6,100/yr per oven** based on the following cost information:

a. Routine repair procedures including spray patching, silica dusting, mobile gunning, ceramic welding, and repairing or replacing burners and nozzles:

   Labor $2,200,000/yr
   Material $600,000/yr
   Total $2,800,000/yr for 812 ovens = **$3,400/yr per oven**

b. End flue repairs - 8 end flues per year for 12 batteries

   Labor $10,000/yr
   Material $207,000/yr
   Total $217,000/yr for 812 ovens = **$270/oven**

c. Through-wall repair - 2.2/yr

   Labor $73,000/yr
   Material $1,900,000/yr
   Total $1,973,000/yr for 812 ovens = **$2,400/oven**

Initial repairs to upgrade Group C include spray patching, through-wall repairs, and end flue repairs:

a. Spray patching (average of cost data for spray patching, mobile gunning, and ceramic welding) = $525/oven

b. Through-wall repair (cost survey average) = $1,100,000 per through wall

c. End flue repair (USS Clairton cost data) = $27,000/flue

The costs for baffles, pushing emission controls and monitoring will be applied on a battery-specific basis because the status of each battery is known with respect to these items.

a. Baffles with water spray cleaning system (Acme Steel cost data): capital cost = $140,000

b. COMS (average from USS Clairton and Citizen's Gas cost data): capital cost = $37,000 and operating cost = $8,000/yr

c. Bag leak detection system: capital cost = $9,000 and operating cost = $500/yr

d. Monitor four pushes per battery per day = $11,000 * number of batteries + $22,000

Model battery costs are summarized in Table 6-8. For the Model A batteries (batteries that can already achieve the MACT level of control), the lower end of the range (no additional costs) represents those batteries that already have COMS and pushing emission observers, and the upper end of the range represents batteries that must install COMS and hire pushing emission observers. The Model B batteries' costs include the cost of monitoring plus the implementation of a baseline program. The Model C batteries' costs are based on a capital expenditure to rebuild or upgrade ovens, plus the costs of monitoring and the baseline program. The Model D furnace coke batteries have the same cost elements for monitoring as the Model A group.

6.5 ESTIMATES OF NATIONWIDE COSTS

Nationwide costs are estimated based on assigning model batteries to each actual battery and then applying the model battery costs (adjusted for the number of ovens in each actual battery). For example, batteries that have already achieved the MACT control level are in Groups A and D, and these batteries will incur no additional control costs. However, some of these batteries will incur monitoring costs if they do not already have a COMS or if they are not observing four pushes per day. The Group B batteries will incur costs to implement the baseline program (at $6,100/oven per year). Group C batteries will incur the capital cost of through wall repairs, end flue repairs, and spray patching [at $2,500,000 + $525 * (50% of the ovens)] plus the cost of the baseline program. All batteries without baffles in their quench tower are assumed to install new baffles.

The costs of COMS are applied to each stack that currently does not have one. In addition, bag leak detectors are assumed to be installed for each baghouse. In cases where a single baghouse serves multiple batteries, the cost of the bag leak detection system ($9,000) is distributed among the batteries.

The nationwide capital costs are given in Table 6-9, and the nationwide annual costs are given in Table 6-10. Capital costs are estimated at $12 million and total annualized costs at $14 million per year.

TABLE 6-8. COSTS ESTIMATES FOR THE MODEL BATTERIES

Foundry coke model battery	Costs (thousands of 1998 dollars)		
	Capital	Annual operating	Total annual[a]
A[b]	0 to 46	0 to 42	0 to 48
B	46	317	323
C	2,550	317	558
Furnace coke model battery	**Costs (thousands of 1998 dollars)**		
	Capital	**Annual operating**	**Total annual[a]**
A[b]	0 to 46	0 to 42	0 to 48
B	46	442	448
C	2,550	442	683
D[b]	0 to 46	0 to 42	0 to 48

[a]Includes capital recovery based on a 10-yr life and 7% interest for monitoring equipment and a 20-yr life and 7% interest for pushing controls and baffles.
[b]The range includes those who already perform monitoring and those who do not.

TABLE 6-9. ESTIMATES OF NATIONWIDE CAPITAL COSTS

Plant	Battery	Model	CAPITAL COST ($1,000)					
			Oven rebuild	COM	Bag leak detector	Baffles	Push control	Total
ABC Coke, Tarrant, AL	1A	1A		37	9			46
ABC Coke, Tarrant, AL	5/6	1A		37	9			46
Acme Steel, Chicago, IL	1	2A		37	0			37
Acme Steel, Chicago, IL	2	2A		37	0			37
AK Steel, Ashland, KY	3	2B		37	4.5			42
AK Steel, Ashland, KY	4	2B		37	4.5			42
AK Steel, Middletown, OH	W	2A		37	9			46
Bethlehem Steel, Burns Harbor, IN	1	2D		0	0			-
Bethlehem Steel, Burns Harbor, IN	2	2D		0	9			9
Bethlehem Steel, Lackawanna, NY	7	2B		0	4.5			5
Bethlehem Steel, Lackawanna, NY	8	2B		0	4.5			5
Citizens Gas, Indianapolis, IN	1	1B		0	3.0			3
Citizens Gas, Indianapolis, IN	E	1B		0	3.0			3
Citizens Gas, Indianapolis, IN	H	1B		0	3.0			3
Empire Coke, Holt, AL	1/2	1C	2,516	37	0		10,000	2,553
Erie Coke, Erie, PA	A	1B		18.5	0	70		89
Erie Coke, Erie, PA	B	1B		18.5	0	70		89
Geneva Steel, Provo, UT	1	2B		37	4.5			42
Geneva Steel, Provo, UT	2	2B		37	4.5			42
Geneva Steel, Provo, UT	3	2B		37	4.5			42
Geneva Steel, Provo, UT	4	2B		37	4.5			42
Gulf States Steel, Gadsden, AL	2	2C	2,517	37	0		5,000	2,554
Gulf States Steel, Gadsden, AL	3	2C	2,517	37	0		5,000	2,554
Koppers, Monessen, PA	1B	1B		37	4.5			42
Koppers, Monessen, PA	2	1B		37	4.5			42
LTV Steel, Chicago, IL	2	2D		0	9			9
LTV Steel, Warren, OH	4	2A		37	0			37

TABLE 6-9. ESTIMATES OF NATIONWIDE CAPITAL COSTS (continued)

Plant	Battery	Model	CAPITAL COST ($1,000)					
			Oven rebuild	COM	Bag leak detector	Baffles	Push control	Total
National Steel, Ecorse, MI	5	2D		0	9			9
National Steel, Granite City, IL	A	2B		37	0			37
National Steel, Granite City, IL	B	2B		0	0			-
New Boston, Portsmouth, OH	2	2C		37	0			37
Shenango, Pittsburgh, PA	1	2A		0	9			9
Sloss Industries, Birmingham, AL	3	1B		18.5	3.0			21
Sloss Industries, Birmingham, AL	4	1B		18.5	3.0			21
Sloss Industries, Birmingham, AL	5	1B		37	3.0			40
Tonawanda, Buffalo, NY	2	1C	2,516	37	0	280	10,000	2,833
USS, Clairton, PA	1	2A		0	3.0			3
USS, Clairton, PA	2	2A		0	3.0			3
USS, Clairton, PA	3	2A		0	3.0			3
USS, Clairton, PA	7	2A		0	3.0			3
USS, Clairton, PA	8	2A		0	3.0			3
USS, Clairton, PA	9	2A		0	3.0			3
USS, Clairton, PA	13	2A		0	3.0			3
USS, Clairton, PA	14	2A		0	3.0			3
USS, Clairton, PA	15	2A		0	3.0			3
USS, Clairton, PA	19	2B		0	4.5			5
USS, Clairton, PA	20	2B		0	4.5			5
USS, Clairton, PA	B	2D		0	9			9
USS, Gary, IN	2	2D		0	0			-
USS, Gary, IN	3	2D		0	0			-
USS, Gary, IN	5	2B		0	4.5			5
USS, Gary, IN	7	2B		0	4.5			5

TABLE 6-9. ESTIMATES OF NATIONWIDE CAPITAL COSTS (continued)

Plant	Battery	Model	CAPITAL COST ($1,000)					
			Oven rebuild	COM	Bag leak detector	Baffles	Push control	Total
Wheeling-Pitt, East Steubenville, WV	1	2B		37	3.0			40
Wheeling-Pitt, East Steubenville, WV	2	2B		37	3.0			40
Wheeling-Pitt, East Steubenville, WV	3	2B		37	3.0			40
Wheeling-Pitt, East Steubenville, WV	8	2D		37	0			37
TOTALS			**10,066**	**999**	**188**	**420**	**30,000**	**11,673**

TABLE 6-10. ESTIMATES OF NATIONWIDE ANNUAL COSTS

Plant	Battery	Model	OPERATING COST ($1,000/yr)						Total annual ($1,000/yr)
			Baseline Program	VE observer	COM	Bag leak	Pushing control	Total	
ABC Coke, Tarrant, AL	1A	1A		22	8	0.5		31	37
ABC Coke, Tarrant, AL	5/6	1A		22	8	0.5		31	37
Acme Steel, Chicago, IL	1	2A		33	8	0		41	46
Acme Steel, Chicago, IL	2	2A		33	8	0		41	46
AK Steel, Ashland, KY	3	2B	464	33	8	0.25		505	511
AK Steel, Ashland, KY	4	2B	427	33	8	0.25		468	474
AK Steel, Middletown, OH	W	2A		33	8	0.5		42	48
Bethlehem Steel, Burns Harbor, IN	1	2D		33	0	0		33	33
Bethlehem Steel, Burns Harbor, IN	2	2D		33	0	0.5		34	35
Bethlehem Steel, Lackawanna, NY	7	2B	464	33	0	0.25		497	497
Bethlehem Steel, Lackawanna, NY	8	2B	464	33	0	0.25		497	497
Citizens Gas, Indianapolis, IN	1	1B	439	18	0	0.165		458	458
Citizens Gas, Indianapolis, IN	E	1B	287	18	0	0.165		305	306
Citizens Gas, Indianapolis, IN	H	1B	250	18	0	0.165		269	269
Empire Coke, Holt, AL	1/2	1C	366	33	8	0	800	407	649
Erie Coke, Erie, PA	A	1B	140	33	4	0		177	187
Erie Coke, Erie, PA	B	1B	214	33	4	0		251	260
Geneva Steel, Provo, UT	1	2B	384	33	8	0.25		426	431
Geneva Steel, Provo, UT	2	2B	384	33	8	0.25		426	431
Geneva Steel, Provo, UT	3	2B	384	33	8	0.25		426	431
Geneva Steel, Provo, UT	4	2B	384	33	8	0.25		426	431
Gulf States Steel, Gadsden, AL	2	2C	397	33	8	0	400	438	679
Gulf States Steel, Gadsden, AL	3	2C	397	33	8	0	400	438	679
Koppers, Monessen, PA	1B	1B	226	22	8	0.25		256	262
Koppers, Monessen, PA	2	1B	116	22	8	0.25		146	152
LTV Steel, Chicago, IL	2	2D			0	0.5		1	2
LTV Steel, Warren, OH	4	2A			8	0		8	13
National Steel, Ecorse, MI	5	2D			0	0.5		1	2
National Steel, Granite City, IL	A	2B	275	33	8	0		316	321

TABLE 6-10. ESTIMATES OF NATIONWIDE ANNUAL COSTS (continued)

Plant	Battery	Model	OPERATING COST ($1,000/yr)						Total annual ($1,000/yr)
			Baseline Program	VE observer	COM	Bag leak	Pushing control	Total	
National Steel, Granite City, IL	B	2B	275	33	0	0		308	308
New Boston, Portsmouth, OH	2	2C	427	33	8	0		468	473
Shenango, Pittsburgh, PA	1	2A		33	0	0.5		34	35
Sloss Industries, Birmingham, AL	3	1B	183	18	4	0.165		205	209
Sloss Industries, Birmingham, AL	4	1B	183	18	4	0.165		205	209
Sloss Industries, Birmingham, AL	5	1B	366	18	8	0.165		392	398
Tonawanda, Buffalo, NY	2	1C	366	33	8	0	800	407	675
USS, Clairton, PA	1	2A		33	0	0.165		33	34
USS, Clairton, PA	2	2A		33	0	0.165		33	34
USS, Clairton, PA	3	2A		33	0	0.165		33	34
USS, Clairton, PA	7	2A		33	0	0.165		33	34
USS, Clairton, PA	8	2A		33	0	0.165		33	34
USS, Clairton, PA	9	2A		33	0	0.165		33	34
USS, Clairton, PA	13	2A		33	0	0.165		33	34
USS, Clairton, PA	14	2A		33	0	0.165		33	34
USS, Clairton, PA	15	2A		33	0	0.165		33	34
USS, Clairton, PA	19	2B	531	33	0	0.25		564	565
USS, Clairton, PA	20	2B	531	33	0	0.25		564	565
USS, Clairton, PA	B	2D		33	0	0.5		34	35
USS, Gary, IN	2	2D		33	0	0		33	33
USS, Gary, IN	3	2D		33	0	0		33	33
USS, Gary, IN	5	2B	470	33	0	0.25		503	504
USS, Gary, IN	7	2B	470	33	0	0.25		503	504
Wheeling-Pitt, East Steubenville, WV	1	2B	287	33	8	0.165		328	334
Wheeling-Pitt, East Steubenville, WV	2	2B	287	33	8	0.165		328	334

TABLE 6-10. ESTIMATES OF NATIONWIDE ANNUAL COSTS (continued)

Plant	Battery	Model	OPERATING COST ($1,000/yr)						Total annual ($1,000/yr)
			Baseline Program	VE observer	COM	Bag leak	Pushing control	Total	
Wheeling-Pitt, East Steubenville, WV	3	2B	311	33	8	0.165		352	358
Wheeling-Pitt, East Steubenville, WV	8	2D		33	8	0		41	46
TOTALS			**11,145**	**1,617**	**216**	**10**	**2,400**	**12,988**	**14,142**

6.6 REFERENCES

1. W. Poling, Cost Survey Response for ABC Coke, May 28, 1999.

2. S. Felton, Cost Survey Response for AK Steel, May 10, 1999,

3. R. Christensen, Cost Survey Response for Geneva Steel, May 18, 1999.

4. C. Davis, Cost Survey Response for U.S. Steel Clairton Works and Gary Coke, May 24, 1999.

5. W. Kohlmann, Cost Survey Response for Citizen's Gas, June 1999.

6. G. Bradley, Cost Survey Response for Indiana Harbor Coke, June 4, 1999.

7. D. Holmberg, Cost Survey Response for Acme Steel, June 1, 1999.

APPENDIX A. DOCUMENTATION FOR THE MACT FLOOR

This appendix documents the data analyses that were used to develop the MACT floor for pushing, soaking, quenching, and battery stacks. The proposal preamble provides details on the rationale for selection of the floor and MACT, and all data summarized in the preamble are presented in detail in this appendix. Appendices B and C provide a more detailed listing of the data.

A.1 PUSHING: BY-PRODUCT BATTERIES WITH VERTICAL FLUES

As discussed in the proposal preamble, separate analyses were performed for by-product batteries with vertical flues, by-product batteries with horizontal flues, and non-recovery batteries because of differences in operation, control techniques, and emissions. Additional details on these differences are provided in the process description in Section 2.2.

A.1.1 Description of Control Technology

Coke oven emissions occur during pushing from incomplete coking, which results in a "green" push. Green pushes can be caused by overcharging an oven, cold flues due to plugging or poor combustion, non-uniform heating, and cold spots on the ends of ovens. Emissions from green pushes range from moderate (relatively small amounts of green coke) to severe (large amounts of green coke). Severely green pushes generate voluminous plumes of emissions that can overwhelm the capture systems which are used to control the comparatively small amounts of PM emissions during ordinary operation. The most effective control measures are to: (1) minimize the frequency of green pushes by implementing a preventative maintenance program for the battery and (2) implement work practices that include diagnostic procedures to identify the cause of green pushes and which trigger corrective actions to prevent recurrence. Batteries that have implemented these procedures on a continuing basis have few green pushes, and thus substantially lower levels of HAP emissions.

Details on the technology used to minimize the frequency of green pushes were collected from site visits,[1, 2, 3, 4] discussions with industry experts,[5, 6] and a survey of industry practices.[7] There are two important components of the technology -- routine operation and maintenance for the battery and a work practice program for green pushes. A good operation and maintenance

program includes several elements that help prevent green pushes. These include checking coal properties (bulk density and moisture) to prevent overcharging an oven or undercoking wet coal, checking flue temperatures and cleaning flues and burners to avoid cold flues, documenting coking time and following the pushing schedule to avoid pushing an oven early, and operating the underfiring system properly to ensure complete coking. When a green push occurs, diligent work practices are initiated to identify the cause of the green push and to take corrective actions to fix the problem. Corrective actions may include cleaning blocked flues or burners, placing an oven on an extended coking time, or repairing a damaged oven.

A.1.2 Pushing Data

Opacity data for fugitive emissions from pushing were obtained from 15 well-controlled batteries at eight coke plants to characterize the control level achievable by the 56 batteries with vertical flues. These batteries include six at USX Clairton Works (Clairton, PA), two at Bethlehem Steel (Burns Harbor, IN), two at Acme Steel (Chicago, IL), one at AK Steel (Middletown, OH), one at National Steel (Ecorse, MI), one at New Boston Coke (New Boston, OH), and two at LTV Steel (Warren, OH and Chicago, IL). An important part of the data collection effort was to use a consistent methodology for the opacity observations to compile all of the data on a uniform basis. The data were collected using EPA Method 9 and analyzed based on the six highest consecutive 15-second readings per push. Observations were made from the time coke began to fall from the oven until the quench car entered the quench tower.

The batteries are representative of the industry because they have different combinations of oven height and type of underfiring systems. Eight are four-meter gun flue batteries, three are four-meter underjet batteries, and four are six-meter underjet batteries. The number of pushes observed for each battery ranges from 45 to 1,539 with a total of 3,630 data points. (A complete listing of the data is provided in Appendix B.)

Table A-1 provides a summary of the distribution of opacity for these batteries. The low frequency of high opacity pushes shows that this group of batteries represents good performance in terms of minimizing green pushes. For example, the average opacity per push never exceeds

30% for nine of the short batteries, and the other two short batteries exceed 30% only once. Two of the tall batteries never exceed 35%, and the other two exceed it only once.

In general, the opacities during pushing for tall batteries are higher than those for short batteries as shown by the results for Bethlehem Steel (Burns Harbor, IN) and LTV Steel (Chicago, IL) in Table A-1. This is probably due to the longer flame height needed in tall batteries that makes uniform heating more difficult. In addition, the greater height of fall of the coke from a tall oven can result in more visible emissions.

The batteries at Acme Steel and AK Steel are 4-meter underjet batteries, and the other 4-meter batteries in Table A-1 are gun flue batteries. Batteries with both types of underfiring systems perform equally well in minimizing the frequency of green pushes. Consequently, it was not necessary to differentiate between the two types of underfiring systems in the data analysis.

The pushing data were analyzed to evaluate two formats, the average opacity of four pushes and a trigger based on the average opacity per push.

Average of 4 Pushes. The data were analyzed based on a format using the average opacity of four consecutive pushes (based on the six highest consecutive 15-second observations during each push) using EPA Method 9. This format can accommodate an occasional (unavoidable) green push if the other pushes are well controlled, and it is consistent with the 6-minute average (24 observations) typically used for Method 9.

The results based on the average opacity of four pushes are presented in Table A-2 for short (4-meter) batteries and Table A-3 for tall (6-meter) batteries. The results are summarized in terms of the highest values (upper percentiles) observed for the average of four pushes. For example, the 100th percentile represents the highest value in the set of data for a given battery. Other percentiles were calculated by interpolation after all observations were ranked from highest to lowest. Using the results for LTV-Warren as an example, no four-push average exceeded 20% opacity, and 99% were less than 16%. For short batteries, more than 99% of the averages of four pushes are less than 20% opacity. For tall batteries, more than 99% of the averages of four pushes are less than 25%.

TABLE A-1. DISTRIBUTION OF NUMBER OF PUSHES -- ALL DATA

4-meter batteries:	**NUMBER OF PUSHES IN INDICATED OPACITY RANGE**							**Total**
	<20%	**≥20%**	**≥25%**	**≥30%**	**≥35%**	**≥40%**	**≥50%**	
Acme 1 & 2[8]	377	10	0	**0**	0	0	0	387
AK Steel (OH)[9, 14]	36	9	3	**0**	0	0	0	45
LTV-Warren[10]	1,147	9	2	**1**	0	0	0	1,156
New Boston[11, 12]	211	0	0	**0**	0	0	0	211
USX 7, 8, 9*[13]	46	3 (2)	2 (1)	**1 (0)**	1 (0)	1 (0)	1 (0)	49 (48)
USX 13,14,15[13]	44	3	2	**0**	0	0	0	47
6-meter batteries:	**NUMBER OF PUSHES IN INDICATED OPACITY RANGE**							
	<20%	**≥20%**	**≥25%**	**≥30%**	**≥35%**	**≥40%**	**≥50%**	
Bethlehem 1 & 2[15]	72	23	6	3	**1**	1	0	95
LTV-Chicago[16]	1,518	21	12	3	**1**	0	0	1,539
National (MI)[17]	102	0	0	0	**0**	0	0	102

* The opacities in parentheses are the results after deleting the highest single reading (50% for Battery 9), which is an outlier based on Dixon's extreme value test.

TABLE A-2. SUMMARY OF PUSHING OPACITY DATA FOR 4-METER BATTERIES

Parameter		USS Clairton Batteries 7, 8, & 9 (4-m Gun Flue)*[13]	USS Clairton Batteries 13, 14, & 15 (4-m Gun Flue)[13]	LTV, Warren Battery 4 (4-m Gun Flue)[10]	New Boston Battery 2 (4-m Gun Flue)[11, 12]
Dates		4/20/99 to 4/22/99	4/20/99 to 4/22/99	10/1/98 to 10/31/99	1/11/99 - 1/13/99 and 7/27/99 - 10/29/99
Number of pushes		49 (48)	47	1,156	211
Percentiles for the average of 4 pushes	100	21 (14)	16	20	15
	99.7	21 (14)	16	18	15
	99	19 (13)	15	16	15
	95	13 (12)	14	14	14
	90	12 (12)	12	13	14

Parameter		Acme Steel Batteries 1 & 2 (4-m Underjet)[8]	AK Steel, Middletown Battery 3 (4-m Underjet)[9, 14]
Dates		3/8/99 to 3/21/99	3/8/99 to 3/11/99
Number of pushes		387	45
Percentiles for the average of 4 pushes	100	19	20
	99.7	18	20
	99	17	20
	95	15	20
	90	14	19

* The opacities in parentheses are the results after deleting the highest single reading (50% for Battery 9), which is an outlier based on Dixon's extreme value test.

TABLE A-3. SUMMARY OF PUSHING OPACITY DATA FOR 6-METER BATTERIES

Parameter		National Ecorse Battery 5 (6-m Underjet)[17]	LTV Chicago Battery 2 (6-m Underjet)[16]	Bethlehem Steel Batteries 1 & 2 (6-m Underjet)[15]
Dates		6/8/99 to 12/1/99	1/1/98 to 10/29/99	4/6/99 to 4/15/99
Number of pushes		102	1,539	95
Percentiles for the average of 4 pushes	100	9	22	26
	99.7	9	21	26
	99	8	18	24
	95	4	15	23
	90	3	13	21

Trigger Format. Another format used in the data analysis is based on an opacity level per push that triggers diagnostic procedures and corrective actions when exceeded. The average opacity per push was used in the data analysis rather than averaging over multiple pushes because the goal is to identify a problem oven that produces a green push. Once a problem oven is identified, diagnostic procedures to determine the cause are initiated and corrective actions are taken to fix the problem with that oven.

The data analysis considered potential trigger levels of 20, 25, 30, and 35%. The batteries that are well-controlled have several pushes that exceed 20 and 25%, and these opacities do not represent a green push. However, opacities of 30 and 35% occur when there are high individual opacity readings characteristic of green coke. In addition, these opacities are seldom exceeded by well-controlled batteries. As shown in Table A-1, nine of the short batteries do not exceed 30% opacity, and the other two exceed 30% only once. Similarly, two of the four tall batteries do not exceed 35% opacity, while the other two exceed 35% once.

A.2 PUSHING: BY-PRODUCT BATTERIES WITH HORIZONTAL FLUES

The vast majority of by-product batteries in the U.S. have vertical flues (56 out of 58 batteries). Two batteries at Empire Coke in Holt, AL, however, have horizontal flues. Both are Semet Solvay batteries which is an antiquated design built in the early 1900s. Battery 1 was built in 1903 and is comprised of 40 ovens, and Battery 2 was built in 1913 and has 20 ovens.

Unlike vertical flue batteries which include 25 to 37 individual flues along each oven wall, the flue system of the Semet Solvay design includes only five horizontal flues which convey the combustion gases from top to bottom in serpentine fashion. Because the hot combustion products flow from one flue to the next, the heat control of each upper flue materially affects the heating conditions in the next flue down. Each flue in the horizontal design affects a larger percentage of the total coke mass than for the vertical flue design.

As with other types of coke oven batteries, the primary source of HAP emissions from batteries with horizontal flues is the occurrence of green pushes. To evaluate control techniques for batteries with horizontal flues, EPA visited the plant[18] and held discussions with plant personnel to learn more about their operation and how the production of green coke could be minimized.[20, 21, 22, 23] Both existing batteries currently use a combination of coking time and flue temperature controls and routine operation and maintenance to control HAP emissions. The most important factor affecting the production of green coke is a combination of coking time and flue temperature. If the flue temperature is too low at a given coking time, green coke will be produced. Consequently, monitoring flue temperatures and coking time and taking corrective actions if the temperature is too low minimize the frequency of green pushes for batteries with horizontal flues. Temperature measurements are made in all flues prior to the push, and if a low temperature is detected, the coking time is extended to prevent a green push. In addition, routine operation and maintenance procedures for the battery are also important to prevent green pushes. Routine operation and maintenance include monitoring underfiring gas parameters and adjusting as necessary; implementing procedures to avoid pushing out of sequence, pushing prematurely, or overcharging an oven; and routine inspection of flues, burners, and nozzles.

A.3 PUSHING: NON-RECOVERY BATTERIES

Non-recovery coke oven batteries differ from by-product coke oven batteries both physically and operationally. Physically, the ovens that comprise non-recovery batteries are horizontal in configuration (short and wide) unlike the vertically configured slot ovens (tall and narrow) used in the by-product recovery design. In addition, non-recovery batteries have no underfiring systems and do not burn clean coke oven gas for heating. Rather, non-recovery batteries are heated by the complete combustion of the raw gases evolved during the coking process in the free space above the coke bed and in flues in the oven walls and floors. The principal difference operationally is that the non-recovery batteries are maintained at all times under negative pressure rather than positive pressure. This results in the virtual elimination of door leaks and, relative to limiting pushing emissions, allows for the visual inspection of the coke mass throughout the coking cycle including just prior to pushing. If the coal is not fully coked, the coking time can be extended to avoid a green push. In addition, PM emissions are lower from non-recovery ovens because the height of fall of the coke mass is about 50% less than that of by-product ovens.

There are two non-recovery coke plants in the U.S., Jewell Coke and Coal in Vansant, VA with six batteries and Indiana Harbor Coke in East Chicago, IN with four batteries. Both plants have cokeside sheds. At the Vansant plant, the sheds act as large settling chambers with no ventilation. The four East Chicago batteries are equipped with sheds that are ventilated along the entire length of the battery to baghouses for particulate control.

EPA held discussions with plant representatives to gather information on the technology used to prevent green pushes.[24, 25, 26] Prior to each push, a small door (oven damper) on the oven is opened, and the bed of coke is observed to determine whether it is fully coked. This is possible because the oven configuration provides an unobstructed view of the free space across the entire length of the coke bed. If the oven is not fully coked (as indicated by smoke or an obstructed view of the opposite side of the oven), the coking time is extended, and the oven is not pushed until coking is reasonably complete. This pollution prevention control measure provides the most effective demonstrated approach to reducing, if not virtually eliminating green pushes.

A.4 CAPTURE AND CONTROL EQUIPMENT FOR PUSHING

In addition to good operating and maintenance practices to prevent green pushes, most batteries are equipped with capture and control systems for routine PM emissions from pushing. As shown in Table A-4, there are 30 control devices applied to pushing emissions at 56 coke oven batteries, and there are three combinations of capture and control systems used. The most common capture system is a moveable hood. There are 19 moveable hood systems. Sixteen moveable hood systems serving 30 batteries are vented to a baghouse, and three systems serving four batteries are vented to a venturi scrubber. There are 15 batteries equipped with cokeside sheds that enclose the entire length of the battery and are served by six baghouses. There are six batteries equipped with cokeside sheds that serve as settling chambers and are not ventilated. Seven batteries are equipped with mobile scrubber cars which transport venturi scrubbers. Six batteries do not have capture and control systems.

The design and operation of the capture and control systems must be considered in analyzing emission control performance. Two important distinctions evident between moveable hoods and cokeside sheds are their method of operation and ventilation rate. Sheds are ventilated at all times while moveable hoods are ventilated only during pushes (about 2 minutes every 10 to 20 minutes). As shown in Table A-4, sheds have much higher ventilation rates (150,000 to 480,000 acfm), and they capture emissions from door leaks as well as pushing. Another difference is that many moveable hood systems mix cooling air with the hot gases from pushing prior to treatment in a baghouse. These differences can have a significant influence on the selection of the format most appropriate to evaluate emission control performance.

Most moveable hood systems are subject to existing PM emission limits expressed lb/ton of coke pushed. This format is more appropriate than a concentration format (gr/dscf) for several reasons. Both pounds emitted and the quantity of coke produced during a Method 5 test run can be determined with reasonable accuracy while sampling over several pushes. These measurements are not dependent on how long the ventilation fan is running before or after the push or the amount of ambient air that is admitted to cool the gases prior to the baghouse. On the other hand, concentration is not a meaningful measure of performance for this type of system because the resulting measurement can be quite variable depending on how the system is

TABLE A-4. CAPTURE AND CONTROL SYSTEMS FOR PUSHING EMISSIONS[7]

Plant	Battery	Type of emission capture device	Type of emission control device	Volumetric flow rate (acfm)
Bethlehem Steel, Lackawanna, NY	7, 8	CSS	BH	450,000
Geneva Steel, Provo, UT	1, 2	CSS	BH	280,000
Geneva Steel, Provo, UT	3, 4	CSS	BH	280,000
Indiana Harbor, East Chicago, IN	A, B, C, D	CSS	BH	150,000
Shenango, Pittsburgh, PA	1	CSS	BH	300,333
USS, Clairton, PA	B	CSS	BH	408,950
Wheeling-Pittsburgh, WV	1, 2, 3	CSS	BH	301,000
Jewell Coke and Coal, VA	2D,2E,3B, 3C,3F,3G	CSS	None	--
National Steel, Ecorse, MI	5	MH/FD	BH	185,000
ABC Coke, Tarrant, AL	1A	MH/B	BH	130,000
ABC Coke, Tarrant, AL	5, 6	MH/B	BH	130,000
AK Steel, Ashland, KY	3, 4	MH/B	BH	162,000
AK Steel, Middletown, OH	W	MH/B	BH	86,000
Bethlehem Steel, Burns Harbor, IN	2	MH/B	BH	210,500
Citizens Gas, Indianapolis, IN	E, H	MH/B	BH	100,000
Citizens Gas, Indianapolis, IN	1	MH/B	BH	149,000
Koppers, Monessen, PA	1B, 2	MH/B	BH	138,000
Sloss Industries, Birmingham, AL	3, 4, 5	MH/B	BH	152,500
USS, Clairton, PA	1, 2, 3	MH/B	BH	109,367
USS, Clairton, PA	13 , 14, 15	MH/B	BH	117,900
USS, Clairton, PA	19, 20	MH/B	BH	108,600
LTV Steel, Chicago, IL	2	MH/FD	BH	150,000
USS, Gary, IN	5, 7	MH/FD	BH	138,000
USS, Gary, IN	7	MH/FD	BH	138,000
Acme Steel, Chicago, IL	1, 2	MH/B	SCR	144,900
Bethlehem Steel, Burns Harbor, IN	1	MH/B	SCR	167,500
Wheeling-Pittsburgh, WV	8	MH/FD	SCR	132,000
Erie Coke, Erie, PA	A, B	MSC	SCR	37,466
LTV Steel, Warren, OH	4	MSC	SCR	109,500
National Steel, Granite City, IL	A , B	MSC	SCR	62,000
USS, Gary, IN	2, 3	MSC	SCR	66,500
Empire Coke, AL	1, 2		None	
Gulf States Steel, AL	2, 3		None	
New Boston Coke, OH	2		None	
Tonawanda Coke, NY	2		None	

CSS = cokeside shed
MH/FD = moveable hood with fixed duct
MH/B = moveable hood with belt
MSC = moveable scrubber car
BH = baghouse
SCR = scrubber

operated and when sampling is started and stopped. For example, if the fan runs longer or more cooling air is admitted, the resulting concentration measurement will be lower. Consequently, a lb/ton format was used to evaluate the performance of moveable hood systems that ventilate only during the push.

A concentration format was used in the data analysis for cokeside sheds because it is more appropriate than a lb/ton format. Since cokeside sheds ventilate continuously and capture emissions from points other than pushing, performance is much less dependent on the quantity of coke pushed. In this case, concentration can be determined with reasonable accuracy because the ventilation rate is continuous and relatively constant. In addition, concentration has been used in many State and Federal regulations because it has been shown to be one of the best measures of control performance for a baghouse, which is the type of control device used on sheds.

Cokeside sheds with baghouses. Source test data for three of the six coke plants that use cokeside sheds and baghouses are presented in Table A-5. The data consist of three individual test runs per baghouse. All three baghouses are similar in design and operation (i.e., pulse jet units with polyester bags, operated at air-to-cloth ratios of 5 to 5.5 acfm/ft^2). The test results for Indiana Harbor Coke range from 0.001 to 0.004 gr/dscf and average 0.003 gr/dscf. The three runs conducted at Shenango, Inc. range from 0.003 to 0.004 gr/dscf and average 0.004 gr/dscf. Results for Bethlehem Steel (Lackawanna) range from 0.002 to 0.003 gr/dscf and average 0.002 gr/dscf. The highest three run average recorded is 0.004 gr/dscf, and no individual test run exceeded 0.004 gr/dscf.

TABLE A-5. PM TEST RESULTS FOR COKESIDE SHEDS

Plant	**PM concentration (gr/dscf)**			
	Run 1	Run 2	Run 3	Average
Indiana Harbor Coke (1998)[28]	0.004	0.003	0.001	0.003
Shenango (1988)[29]	0.004	0.004	0.003	0.004
Bethlehem Steel, Lackawanna (1997)[30]	0.003	0.003	0.002	0.002

Moveable Hoods with Stationary Controls. The most common capture and control system for pushing emissions is a moveable hood that is ducted to a stationary (land-based) control device, usually a baghouse. These systems have a hood that is usually moved along the battery by a belt system. During pushing, the moveable hood is connected to a fixed duct that evacuates the gases to the stationary control device. Evacuation rates range from about 100,000 to 150,000 acfm. Some of these systems cool the hot gases from pushing by mixing with ambient air prior to the baghouse.

Test data are available for control devices serving 12 of 19 moveable hood systems, 12 are baghouses and one is a land-based venturi scrubber. The individual test runs are listed in Table A-6 and are shown graphically in Figure A-1. The baghouses are mostly pulse jet units and operate at air-to-cloth ratios of 5 to 6 acfm/ft^2. The venturi scrubber is a medium to high energy unit, operating at a pressure drop of 50 to 60 inches of water.

The test results for the 12 systems are quite variable from plant to plant and among individual runs at a single plant. Five of the tests averaged less than 0.010 lb/ton, and eight averaged 0.010 to 0.017 lb/ton. The two baghouses with the highest three-run averages averaged 0.016 and 0.017 lb/ton, respectively. Both are pulse jet units that are similar in design and operation to the other baghouses with lower recorded average emissions. Since there are no meaningful distinctions between the lower and higher emitting units, it appears that the higher test results represent normal variability under a reasonable worst situation.

Mobile Scrubber Cars. Mobile scrubber cars are operated at five plants and serve seven batteries. During pushing, the hood is positioned above the quench car, the scrubber car air mover is activated, and the gases are pulled through the scrubber and are subsequently discharged to the atmosphere. Two of the five scrubber cars that serve three batteries have the hood affixed to the mobile scrubber car which is coupled to the quench car. This allows operation and capture both during pushing and travel to the quench tower. The other three scrubber cars serving four batteries have hoods affixed to the coke guide and door machine and cannot travel to the quench tower.

TABLE A-6. PM TEST RESULTS FOR MOVEABLE HOODS WITH STATIONARY CONTROL DEVICES

Control	Test date	Run No.	PM (lb/ton coke)	PM (gr/dscf)	PM (lb/hr)	Facility, Location	Battery	Reference
FF	Dec-82	1	0.0017	0.00082		AK Steel, Middletown, OH	2	31
FF	Dec-82	2	0.0023	0.0011		AK Steel, Middletown, OH	2	
FF	Dec-82	3	0.0032	0.0016		AK Steel, Middletown, OH	2	
		Avg	0.0024	0.0012				
FF	Aug-98	1	0.0034	0.00057	0.41	Bethlehem, Burns Harbor, IN	2	32
FF	Aug-98	2	0.0023	0.00038	0.26	Bethlehem, Burns Harbor, IN	2	
FF	Aug-98	3	0.0028	0.00045	0.32	Bethlehem, Burns Harbor, IN	2	
		Avg	0.0029	0.00047	0.33			
FF	Oct-93	1	0.0055	0.018	0.65	USSC, Clairton, PA	13,14,15	33
FF	Oct-93	2	0.0030	0.0097	0.35	USSC, Clairton, PA	13,14,15	
FF	Oct-93	3	0.0034	0.012	0.40	USSC, Clairton, PA	13,14,15	
		Avg	0.0040	0.013	0.47			
FF	Mar-94	1	0.0066	0.020	0.68	USSC, Clairton, PA	7,8,9	34
FF	Mar-94	2	0.0034	0.010	0.32	USSC, Clairton, PA	7,8,9	
FF	Mar-94	3	0.0042	0.013	0.45	USSC, Clairton, PA	7,8,9	
		Avg	0.0047	0.014	0.48			
FF	Feb-94	1	0.0078	0.023	0.79	USSC, Clairton, PA	1,2,3	35
FF	Feb-94	2	0.0069	0.021	0.73	USSC, Clairton, PA	1,2,3	
FF	Feb-94	3	0.0064	0.019	0.70	USSC, Clairton, PA	1,2,3	
		Avg	0.0070	0.021	0.74			
FF	Nov-90	1	0.015	0.00050	0.74	Koppers, Dolomite, AL	2B&5	36
FF	Nov-90	2	0.0068	0.00030	0.37	Koppers, Dolomite, AL	2B&5	
FF	Nov-90	3	0.0075	0.00030	0.41	Koppers, Dolomite, AL	2B&5	
		Avg	0.0097	0.00037	0.51			
FF	Sep-93	1	0.015	0.0047	4.7	Koppers, Monessen, PA	1B&2	37
FF	Sep-93	2	0.012	0.0040	3.9	Koppers, Monessen, PA	1B&2	
FF	Sep-93	3	0.0047	0.0015	1.5	Koppers, Monessen, PA	1B&2	
		Avg	0.011	0.0034	3.3			
FF	May-83	1	0.019	0.0096	10.1	USSC, Gary, IN	5&7	38
FF	May-83	2	0.0042	0.0052	5.4	USSC, Gary, IN	5&7	
FF	May-83	3	0.0098	0.0022	2.3	USSC, Gary, IN	5&7	
		Avg	0.011	0.0057	5.9			
FF	Nov-90	1	0.012	0.00050	0.68	Koppers, Dolomite, AL	1,2A,&4	36
FF	Nov-90	2	0.011	0.00040	0.58	Koppers, Dolomite, AL	1,2A,&4	
FF	Nov-90	3	0.013	0.00050	0.72	Koppers, Dolomite, AL	1,2A,&4	
		Avg	0.012	0.00047	0.66			
FF	Nov-84	1	0.016	0.0068	9.9	Sloss, Birmingham, AL		39
FF	Nov-84	2	0.018	0.0071	10.0	Sloss, Birmingham, AL		
FF	Nov-84	3	0.0077	0.0028	4.0	Sloss, Birmingham, AL		
		Avg	0.014	0.0056	8.0			
FF	Sep-85	1	0.021	0.0310	1.2	ABC Coke, Tarrant, AL	1	40
FF	Sep-85	2	0.007	0.0110	0.5	ABC Coke, Tarrant, AL	1	
FF	Sep-85	3	0.023	0.0340	1.1	ABC Coke, Tarrant, AL	1	
		Avg	0.017	0.0260	0.9			

TABLE A-6. PM TEST RESULTS FOR MOVEABLE HOODS WITH STATIONARY CONTROL DEVICES (continued)

Control	Test date	Run No.	PM (lb/ton coke)	PM (gr/dscf)	PM (lb/hr)	Facility, Location	Battery	Reference
FF	Sep-98	1	0.0095	0.0057	0.32	ABC Coke, Tarrant, AL	5,6	41
FF	Sep-98	2	0.012	0.0013	0.44	ABC Coke, Tarrant, AL	5,6	
FF	Sep-98	3	0.026	0.0018	0.90	ABC Coke, Tarrant, AL	5,6	
		Avg	0.016	0.0029	0.55			
VS	Aug-90	1	0.0087	0.011	0.65	Bethlehem, Bethlehem, PA	A	42
VS	Sep-91	1	0.015	0.018	1.1	Bethlehem, Bethlehem, PA	A	
VS	Nov-92	1	0.010	0.013	0.76	Bethlehem, Bethlehem, PA	A	
		Avg	0.011	0.014	0.83			

FF = fabric filter (baghouse)
VS = venturi scrubber

Ventilation rates are on the order of 40,000 to 70,000 acfm. These rates are about half those used for the moveable hoods with land-based controls.

Test data on all five of the mobile scrubber cars currently in operation and are given in Figure A-2 and Table A-7. The test data indicate that emissions expressed in a lb/ton of coke format are affected directly by oven size and whether emissions are captured during pushing and travel to the quench tower. Six-meter batteries produce about twice as much coke per oven as do smaller four-meter batteries. Measured emissions, however, in terms of both mass rate and concentration are quite similar regardless of size. Therefore, emissions expressed in terms of lb/ton of coke must of necessity be lower for tall batteries than for short batteries. When emissions are captured during pushing and travel as opposed to pushing only, the scrubber operates on average about 1.5 to 2 minutes longer than for pushing only (about 1.5 minutes). Operating the same or an equivalent control device for a longer time will result in more particulate matter captured per pushing event and thus, of necessity, result in a higher value in the lb/ton format for pushing and travel versus pushing only. Consequently, the data were analyzed for mobile scrubber cars to accommodate three variations that affect emissions: tall batteries, short batteries, and batteries that capture during both pushing and travel.

FIGURE A-1. PM TESTS FOR MOVEABLE HOODS WITH STATIONARY CONTROLS

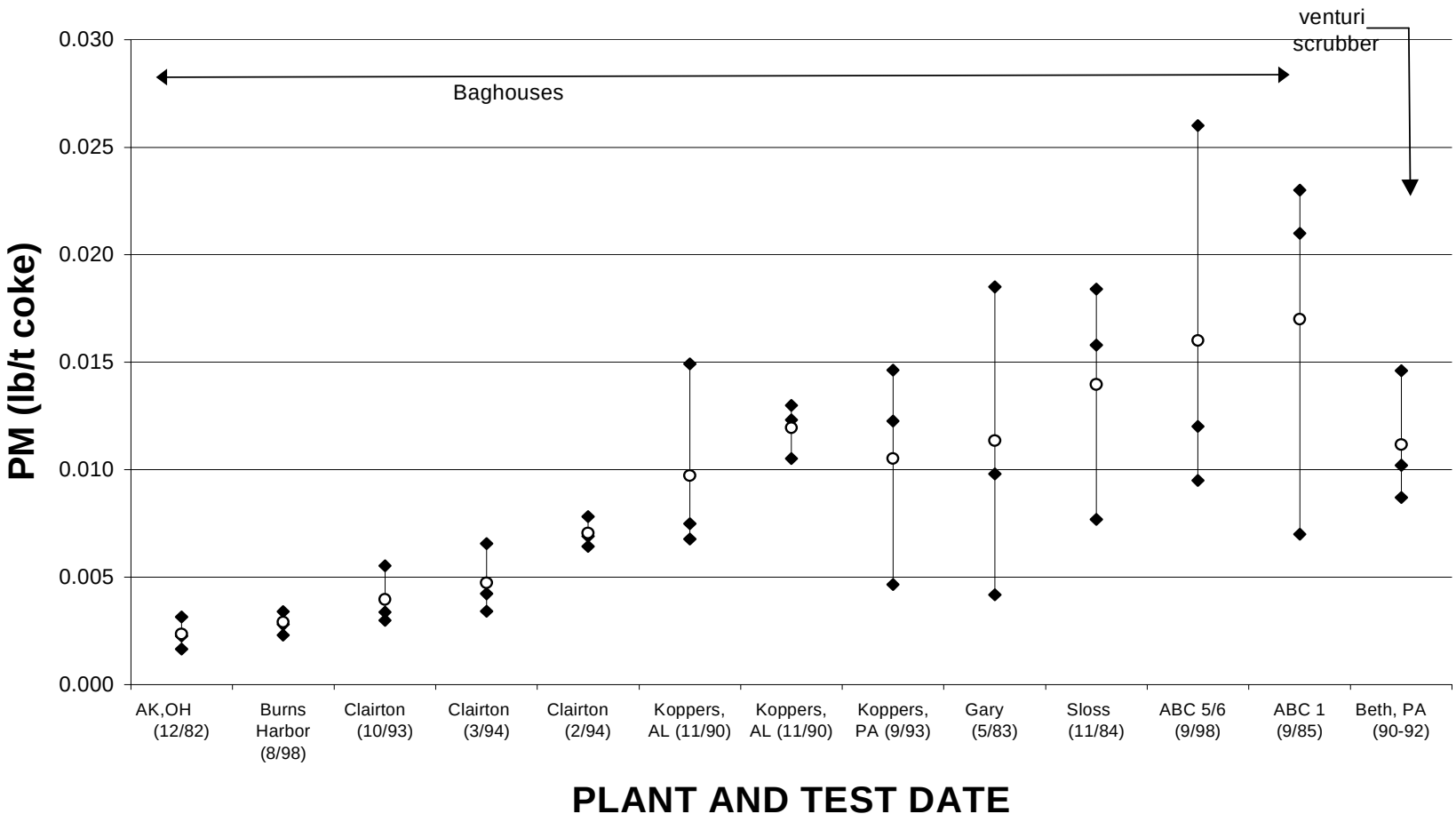

FIGURE A-2. PM TESTS OF MOBILE SCRUBBER CARS

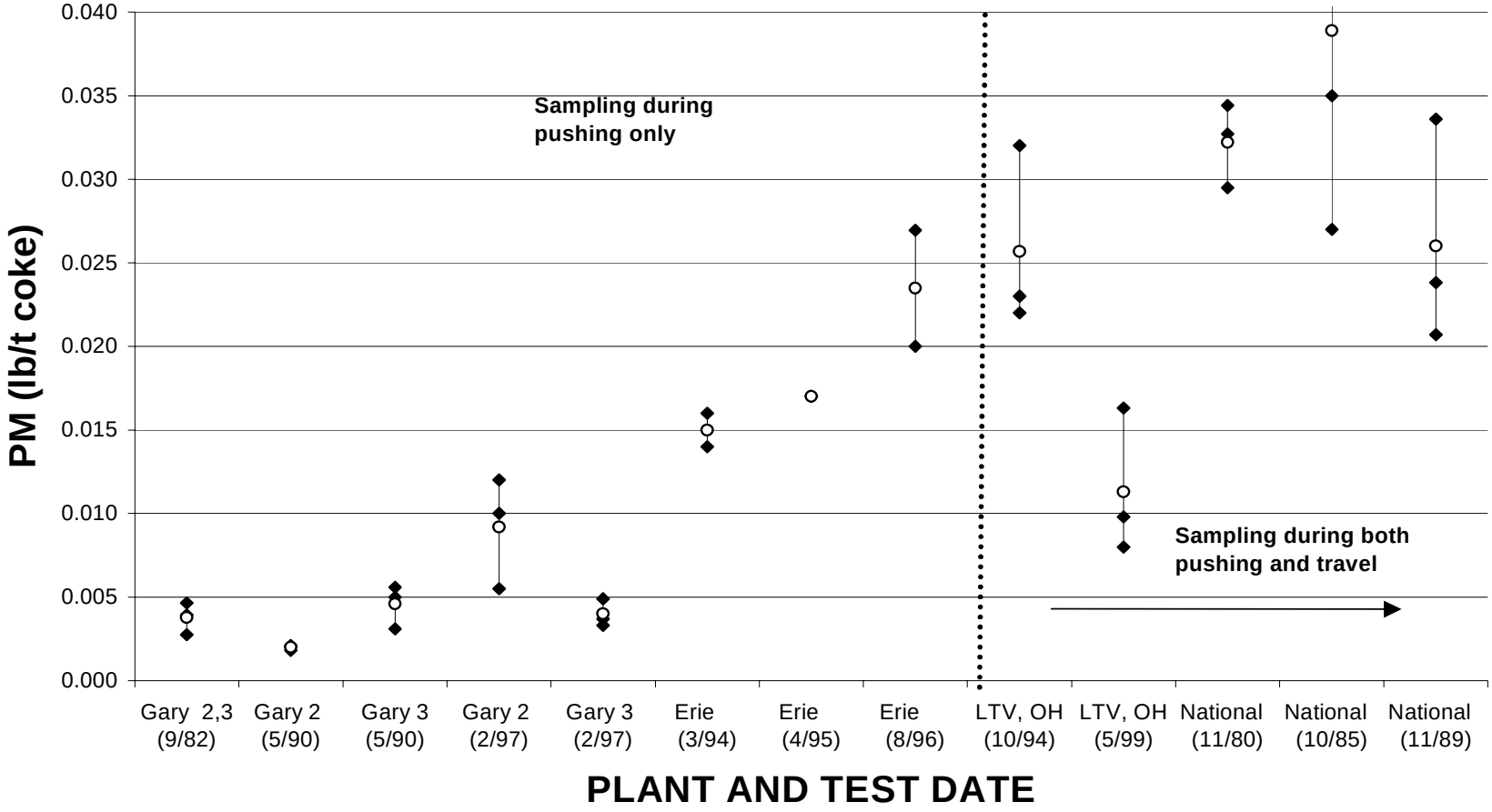

TABLE A-7. PM TEST DATA FOR MOBILE SCRUBBER CARS

MOBILE SCRUBBER CARS - 6-METER BATTERIES WITH NO CAPTURE DURING TRAVEL

Test date	Run No.	PM (lb/ton coke)	PM (gr/dscf)	PM (lb/hr)	Facility, Location	Battery	Reference
Sep-82	1	0.0046	0.021	6.8	USSC, Gary, IN	2,3	38
Sep-82	2	0.0039	0.018	5.8	USSC, Gary, IN	2,3	
Sep-82	3	0.0028	0.013	4.0	USSC, Gary, IN	2,3	
	Avg	0.0038	0.017	5.5			
May-90	1	0.0020	0.0088	2.9	USSC, Gary, IN	2	43
May-90	2	0.0018	0.0075	2.6	USSC, Gary, IN	2	
May-90	3	0.0021	0.0086	3.0	USSC, Gary, IN	2	
	Avg	0.0020	0.0083	2.9			
May-90	1	0.0056	0.0213	8.3	USSC, Gary, IN	3	43
May-90	2	0.0031	0.0120	4.5	USSC, Gary, IN	3	
May-90	3	0.0050	0.0209	2.0	USSC, Gary, IN	3	
	Avg	0.0046	0.0181	4.9			
Feb-97	1	0.012	0.0615	18.1	USSC, Gary, IN	2	44
Feb-97	2	0.01	0.0430	14.4	USSC, Gary, IN	2	
Feb-97	3	0.0055	0.0236	8.0	USSC, Gary, IN	2	
	Avg	0.0092	0.0427	13.5			
Feb-97	1	0.0037	0.0153	5.4	USSC, Gary, IN	3	44
Feb-97	2	0.0049	0.0201	7.1	USSC, Gary, IN	3	
Feb-97	3	0.0033	0.0136	4.9	USSC, Gary, IN	3	
	Avg	0.0040	0.0163	5.8			

MOBILE SCRUBBER CARS - 4-METER BATTERIES WITH NO CAPTURE DURING TRAVEL

Test date	Run No.	PM (lb/ton coke)	PM (gr/dscf)	PM (lb/hr)	Facility, Location	Battery	Reference
Mar-94		0.0170	0.019	0.28	Erie Coke, Erie, PA	A,B	45
Mar-94		0.0170	0.018	0.27	Erie Coke, Erie, PA	A,B	
	Avg	0.0170	0.018	0.27		A,B	
Apr-95		0.0140	0.011	0.27	Erie Coke, Erie, PA	A,B	46
Apr-95		0.0160	0.013	0.30	Erie Coke, Erie, PA	A,B	
	Avg	0.0150	0.012	0.29		A,B	
Aug-96	1	0.027	0.036	0.71	Erie Coke, Erie, PA	A,B	47
Aug-96	2	0.020	0.025	0.48	Erie Coke, Erie, PA	A,B	
	Avg	0.023	0.030	0.60			

TABLE A-7. PM TEST DATA FOR MOBILE SCRUBBER CARS (continued)

MOBILE SCRUBBER CARS - CAPTURE DURING TRAVEL							
Test date	Run No.	PM (lb/ton coke)	PM (gr/dscf)	PM (lb/hr)	Facility, Location	Battery	Reference
Oct-94	1	0.032	0.031	16.79	LTV, OH	4	48
Oct-94	2	0.022	0.021	10.19	LTV, OH	4	
Oct-94	3	0.023	0.020	12.56	LTV, OH	4	
	Avg	0.026	0.024	13.18			
May-99	1	0.016	0.014	7.7	LTV, OH	4	49
May-99	2	0.008	0.007	3.6	LTV, OH	4	
May-99	3	0.010	0.008	4.4	LTV, OH	4	
	Avg	0.011	0.010	5.2			
Oct-85	1	0.027	0.03	12.6	National, Granite City, IL	A, B	50
Oct-85	2	0.035	0.038	15.6	National, Granite City, IL	A, B	
Oct-85	3	0.055	0.059	24.2	National, Granite City, IL	A, B	
	Avg	0.039	0.042	17.5			
Nov-89	1	0.021	0.022	9.0	National, Granite City, IL	A, B	51
Nov-89	2	0.024	0.023	9.3	National, Granite City, IL	A, B	
Nov-89	3	0.034	0.025	12.5	National, Granite City, IL	A, B	
	Avg	0.026	0.023	10.3			
Dec-80	1	0.030	0.016	7.9	National, Granite City, IL	A, B	52
Dec-80	2	0.033	0.017	8.9	National, Granite City, IL	A, B	
Dec-80	3	0.034	0.017	8.9	National, Granite City, IL	A, B	
	Avg	0.032	0.017	8.5			

The test data in Table A-7 include five tests of two identical scrubber cars that serve two six-meter batteries at the USX plant in Gary, IN. These five tests include three runs each and were conducted over a 15-year period spanning 1982 to 1997. The three-run averages range from 0.002 to 0.010 lb/ton. The average value is 0.005 lb/ton.

The test data in Table A-7 include three tests of a scrubber car that does not capture during travel and serves two short batteries at Erie Coke (Erie, PA). These three tests are comprised of two runs per test and span three recent years. The two-run averages are 0.015, 0.017, and 0.023 lb/ton.

There are test data available for three batteries served by two scrubber cars that capture and control emissions during both pushing and travel at LTV Steel's plant in Warren, OH and National Steel's plant in Granite City, IL (see Table A-7). Two tests at one battery averaged 0.011 to 0.026 lb/ton, and three tests conducted on a scrubber car serving two batteries averaged 0.026 to 0.039 lb/ton. These scrubber cars are similar in design and operation, and both capture emissions during travel to the quench tower.

A.5 SOAKING

Soaking is that period at the coking cycle that starts when an oven is dampered off the collecting main and vented to the atmosphere through an open standpipe prior to pushing and ends when the coke begins to be pushed from the oven. The vented gases usually self ignite. Emissions from soaking are most pronounced when green coke is produced. Consequently, the technology for fugitive pushing emissions that minimizes the frequency of green coke will also reduce emissions from soaking. However, most batteries also perform other procedures that reduce emissions from soaking.

The work practices at well-controlled batteries were reviewed to evaluate control techniques for soaking operations.[7] Most batteries have work practices in place to ensure that the gases from open standpipes are ignited during soaking. For example, a summary of the survey responses in Table A-8 shows that 26 of the 58 by-product batteries have procedures to manually ignite the gases from the standpipe if they do not self ignite.

Table A-8. PLANTS THAT MANUALLY IGNITE STANDPIPE EMISSIONS THAT DO NOT SELF-IGNITE DURING SOAKING[7]

Plant	Number of batteries
ABC Coke - Tarrant, AL	3
AK Steel - Ashland, KY	2
Citizen's Gas - Indianapolis, IN	3
Empire Coke - Holt, AL	2
Erie Coke - Erie, PA	2
Koppers - Monessen, PA	2
LTV Steel - Warren, OH	1
National Steel - Granite City, IL	2
New Boston Coke - New Boston, OH	1
Sloss Industries - Birmingham, AL	3
Tonawanda Coke - Tonawanda, NY	1
US Steel - Gary, IN	4
TOTAL	26

A.6 QUENCHING

A review of current State regulations for quenching indicates that all quench towers are subject to design and operational standards. Most regulations prohibit the use of untreated wastewater as make-up water for quenching, require the use of baffles for grit elimination, and include minimum specifications for baffle coverage. Most States also limit TDS in the make-up water used for quenching. The TDS limits range from 500 to 1600 mg/L. However, a TDS limit may be unnecessary to control HAP emissions during quenching because the primary contributor of HAP emissions during quenching is wastewater contaminated with organics from the by-product plant, and solids in the wastewater are not a source of HAP emissions except for trace metals.

Table A-9 provides a summary of the survey of coke plants to determine what plants are doing to control quenching emissions. Of the 43 existing quench towers, 40 have baffles, 22 have the baffles cleaned daily, 21 are subject to a TDS limit, 18 have the baffles inspected monthly, and at least 12 have baffles that cover 95% or more of the cross sectional area of the tower. Although only four of the 11 States with coke plants ban the use of untreated wastewater, no plants currently use untreated by-product plant wastewater as make-up water for quenching.

TABLE A-9. SUMMARY OF QUENCH TOWER REQUIREMENTS AND PRACTICES[7]

Specification	Number of Quench Towers (out of 43 total)	Number of Plants (out of 25 total)
Baffles present	40	23
Baffles required	37	21
Clean water used	29	19
TDS limit in place (500 to 1,600 mg/L)	21	11
95% coverage required	12	7
Baffles inspected:		
At least monthly	18	12
Quarterly	2	2
Bi-annually	10	3
Annually	5	4
Baffles cleaned:		
At least daily	22	12
At least weekly	3	2
“As needed”	5	4
Bi-annually or annually	5	3

A.7 BATTERY STACKS

There are 53 battery stacks that serve 58 by-product batteries. Five plants have a pair of batteries served by one stack, and all other stacks are associated with a single battery. Battery stack emissions occur when raw coke oven gas leaks through oven walls into flues and when there is poor combustion in the underfiring system. Emissions from stacks are usually most noticeable when ovens are charged with coal. Elevated opacity values occur due to the substantial and sudden increase in oven pressure and the resulting leakage of raw coke oven gas into the flue system. The intensity and duration of the in-leakage and impact on stack opacity is a direct result of the physical condition of the oven walls and presence of sealing carbon. Coke oven emissions from battery stacks are controlled by good operation and maintenance which includes using a COMS in the stack.

Good operation and maintenance involves identifying problem ovens that produce high stack opacity emissions when ovens are charged, diagnosing problems, and repairing ovens or adjusting the underfiring system. No batteries currently use add-on control devices for control of emissions from battery stacks.

Based on information from an industry survey[7] and site visits[1, 2, 3], the batteries at Bethlehem Steel in Burns Harbor, IN and USX in Clairton, PA were found to use good operation and maintenance coupled with COMS to control stack emissions. Battery stacks at both plants have COMS that trigger an alarm when the opacity suddenly increases. The oven that was charged when the alarm sounds is investigated for flue leakage and combustion conditions (flame characteristics, gas pressure, stack draft), and corrective actions are taken as needed. Minor repairs may include spray patching or silica dusting; and if the problem is severe, the oven may be taken out of service for more rigorous repairs including ceramic welding, brick replacement, or repair of the entire oven (e.g., end flue or through wall repairs).

Routine and preventative maintenance are also important control measures and include a daily inspection of flues and walls, cleaning gas piping, checking the reversing mechanism and flue combustion, and measuring flue temperatures. If the removal of excess carbon results in inadequate carbon to seal cracks, the oven wall is sprayed before being charged with coal.[3]

COMS data were available for the batteries at Bethlehem Steel (Burns Harbor)[53, 54] and USX Clairton Works.[55, 56, 57, 58] For the two six-meter batteries at Bethlehem Steel (Burns

Harbor), data for one battery cover a continuous period of 50 months, and data for the other battery cover a continuous period of 65 months. Data were available for an 18-month period for eight batteries at USX Clairton when they were operating on a normal coking time (seven four-meter batteries and one six-meter battery). Data were available for four batteries at Clairton while operating on an extended coking time. Data during any identified COMS malfunctions were not included.[59]

These batteries are representative of the various types of batteries in the U.S. in terms of oven height, types of underfiring systems, and battery age. They include both underjet and gun flue systems, oven heights that range from four to six meters, and battery ages from 6 to 46 years. The data also include temporal effects because they cover at least a one-year period, and for two batteries cover a 4- to 5-year period.

The data for Bethlehem Steel's Battery 1 are shown in Figure A-1. The figure illustrates a clear demarcation point in opacity levels occurring about July 1996. The daily average opacity levels recorded over the 36-month period prior to July 1996 average 8.1% with frequent wild oscillations. In contrast, opacity levels for the 36-month period after July 1996 average 4.8% with a substantial dampening in oscillation peaks. Reasons to explain the improvement in performance as evidenced by the data were examined. One apparent reason for improved performance is the resumption of end flue repairs. Battery 1 had 12 end flue repairs in 1992 and 20 in 1993. No end flue repairs were made in 1994 during the rebuilding of Battery 2. Repairs were then resumed in 1995 (12) and continued through 1996 (12), 1997 (14), and 1998 (8).[60] Assuming there is a lag time for improvement in opacity resulting from end flue repairs, opacity levels for 1994 and at least part of 1995 are probably not representative of an optimally maintained battery.

It is apparent that the control technology and stack emissions prior to 1996 are very different from those after 1996, especially since performance should have worsened with battery age if all other factors were equal. The data since 1996 show the performance level that can be achieved on a continuing basis. For example, the daily average opacity never exceeded 15% for over 1,560 consecutive days (4.3 years) from early 1996 through 2000.

Figure A-3 shows that aside from the two and a half month period following startup in December 1994, Battery 2 has been consistently well controlled. Almost all daily average opacities since February 1996 have been less than 10%.

COMS data for four batteries at USX in Gary, IN[61, 62, 63] were also analyzed . As shown in Table A-10, some periods of several days of high opacity were documented as caused by cracks or holes in a single oven's walls.[64, 65] Good operation and maintenance would have resulted in the oven being repaired or taken out of service rather than continuing for several days. In addition, several days of COMS readings that had not been flagged as invalid were due to a COMS malfunction.[66] Other high opacity readings exist for these batteries, and while specific information concerning the cause of other such readings is not available, they may have been due to problems with the COMS, or other operation and maintenance issues (based on the above information).

The data were examined to determine if there are differences in performance associated with oven height and type of underfiring system. As shown in Table A-11, seven short batteries averaged 1 to 4% opacity, and three tall batteries averaged 3, 4, and 5% opacity. The average opacities of the short and tall batteries overlap, and there is no significant difference in the level of control that is achieved. Similarly, there is no difference in performance between underjet and gun flue underfiring systems.

Table A-12 summarizes the upper percentiles of performance for the daily average. The 100th percentile (maximum) is the highest daily average recorded for a battery over the given time period. The data show that a daily average of 15% opacity has been achieved by the ten batteries over 99.7% of the time, and this includes both short and tall batteries and those with both gun flue and underjet underfiring systems.

Data for four batteries at USX Clairton in Table A-13 indicate that stack opacity increases when batteries are placed on extended coking time. The average opacities for batteries on extended coking are approximately twice those of batteries on a normal coking time. This results from less formation of protective sealing carbon that seals small cracks in the oven walls. Battery-wide extended coking is a relatively rare event and is used primarily when the demand for coke drops.

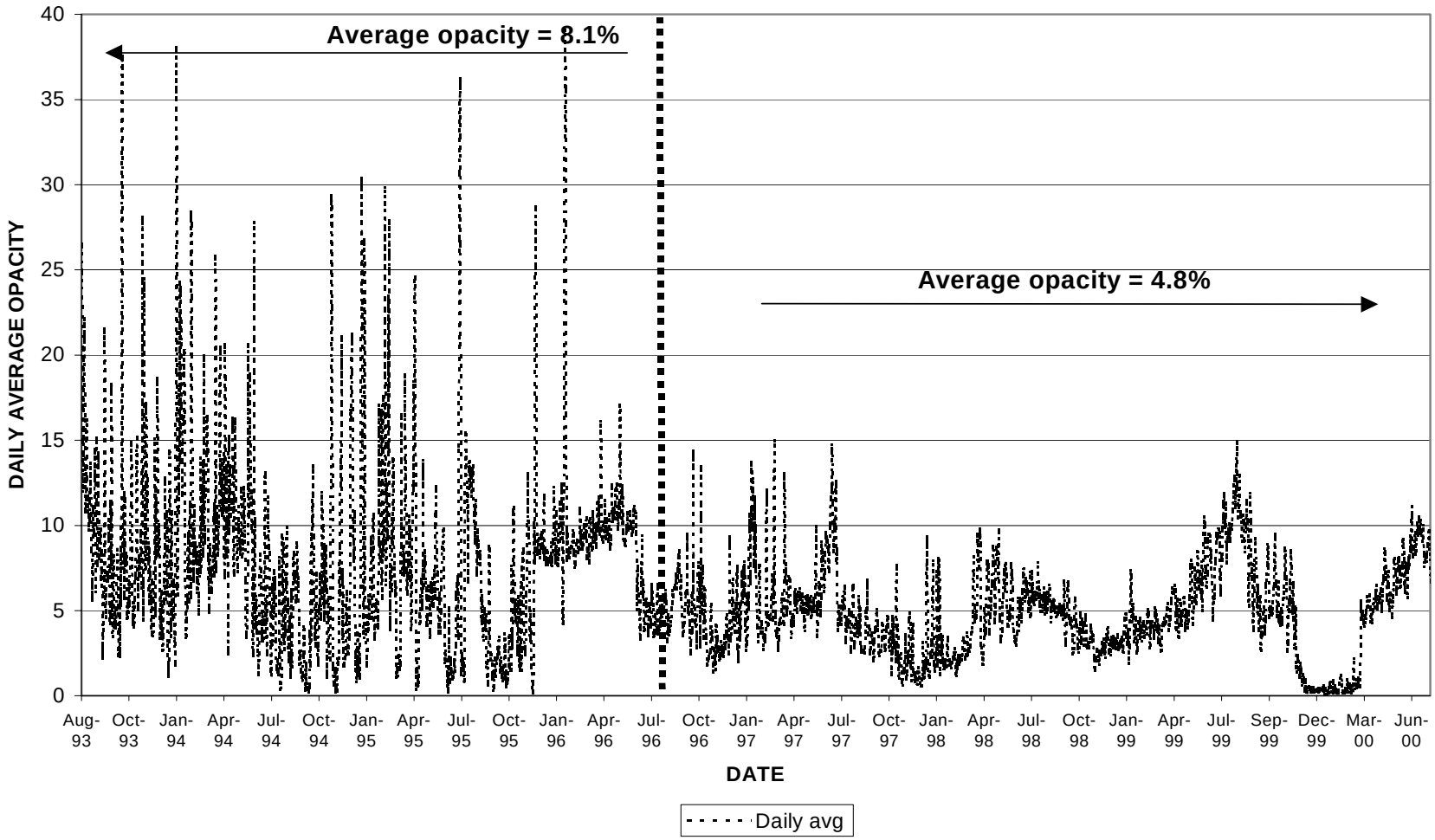

FIGURE A-3. DAILY AVERAGE OPACITY FOR BETHLEHEM STEEL BATTERY 1

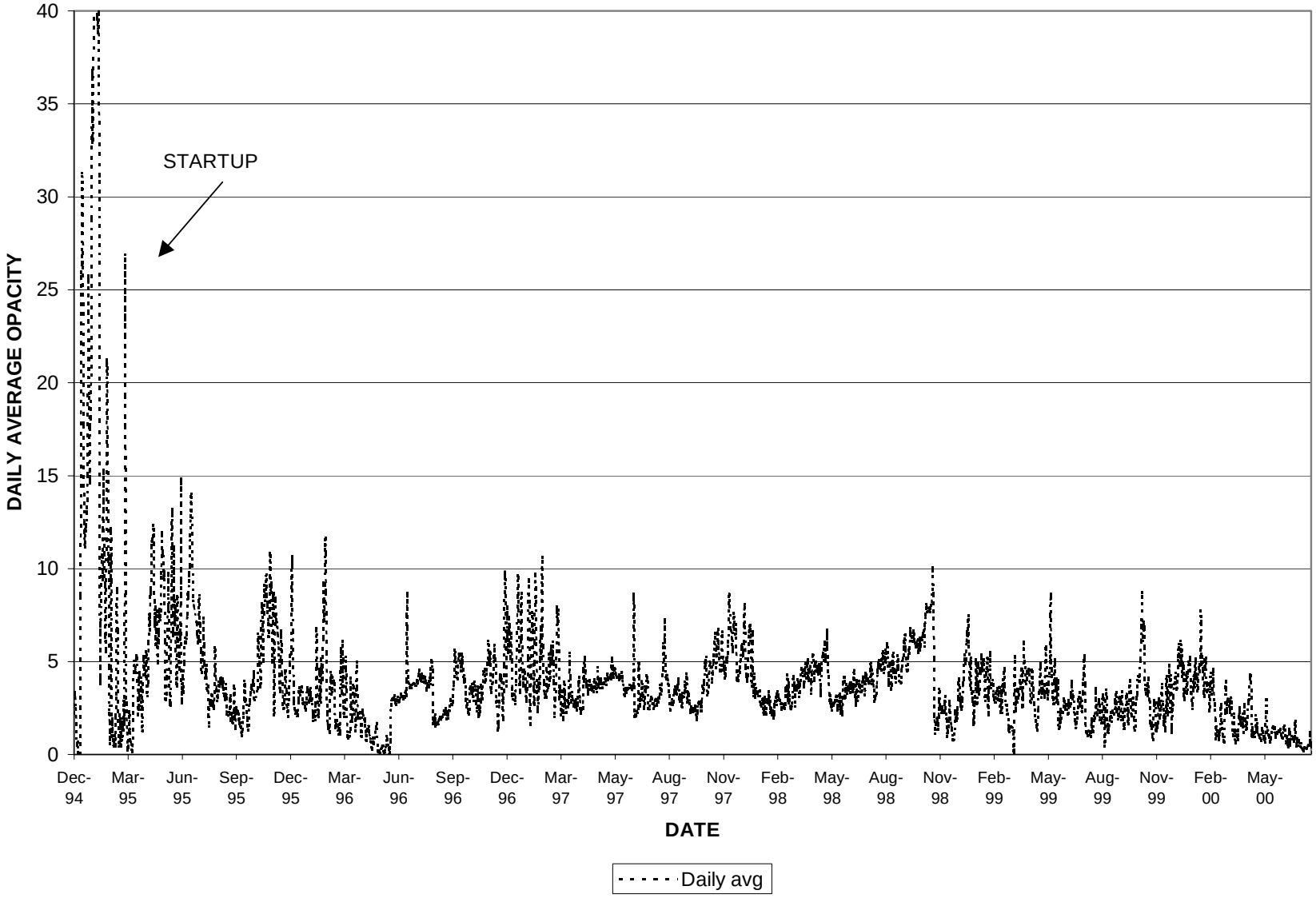

FIGURE A-4. DAILY AVERAGE OPACITY FOR BETHLEHEM STEEL BATTERY 2

TABLE A-10. RECORDED REASONS FOR EXCEEDANCES OF 20% OPACITY LIMIT (6-MIN. AVG) AT USX, GARY[63, 64]

Battery	Dates	Daily average opacity		Summary of Reason(s)
		Range	Average	
2	7/4/98 - 7/28/98	17 - 26	20	678 exceedances due to wall damage were reported during this period (as many as 96 in one day). Oven #24 had wall damage resulting in exceedances on 8 days over a 16-day period. Oven #57 had wall damage resulting in exceedances on 17 days over a 20-day period.
3	1/12/97 - 1/17/97	8 - 46	26	Unsure; no exceedances reported for this period except for one 6-min. average on January 14th (extended coking due to being next to an oven out of service)
	7/17/98 - 7/27/98	16 - 20	18	Charge delays for various reasons accounted for 30 exceedances, combustion problems for 108 exceedances (as many as 33 in one day), and wall damage for 137 exceedances (as many as 55 in one day). The first exceedance attributed to "combustion problems" occurred on 7/21 and was attributed to "desulf being down". The combustion problems for the remainder of the days were not explained.
	9/8/98	32	32	108 exceedances attributed to "combustion problems"
	9/21/98 - 9/24/98	19 - 25	21	186 exceedances during this time period were attributed to charge delays due to precarbon breakdown.
	11/14/98 - 11/19/98	16 - 19	18	Charge delays due to various equipment problems (west buggy down, quench car down, cokeguide breakdown, pusher jamb breakdown, precarbon breakdown, lid lifter broken...). 99 exceedances due to wall damage.
5	2/21/97	40	40	Combustion problems due to askania losing power.
7	2/10/97 - 2/24/97	10 - 29	20	Unsure; only 8 exceedances on 4 days were reported during this period.
	10/31/98 - 11/28/98	16 - 19	18	633 exceedances were reported due to "combustion problems" from 10/31 to 11/09. From 11/10 to 11/28 from 0 to 20 exceedances per day were reported due to charge delays (various reasons), wall damage, and extended coking time.

TABLE A-11. SUMMARY OF COM DATA

Battery	Short batteries							Tall batteries		
	USX 7	USX 8	USX 9	USX 13	USX 14	USX 15	USX 20	USX B*	BSC-BH 1	BSC-BH 2
Average opacity	4	4	4	1	1	2	3	3	5	4
Period of data	8/98-1/00	8/98-1/00	8/98-1/00	8/98-1/00	8/98-1/00	8/98-1/00	8/98-1/00	8/98-1/00	7/96-8/00	3/95-8/00
Duration (mos.)	18	18	18	18	18	18	18	14	50	65
Date of Startup or Rebuild	1954	1954	1954	1989	1989	1980	1951	1982	1983	1994
Height (m)	4	4	4	4	4	4	4	6	6	6
Type	gun flue	gun flue	gun flue	gun flue	gun flue	gun flue	underjet	gun flue	underjet	underjet

TABLE A-12. COM DAILY AVERAGE ANALYSIS- HIGHEST VALUES

Percentiles of daily averages	Opacity at the indicated percentile for each battery									
	USX 7	USX 8	USX 9	USX 13	USX 14	USX 15	USX 20	USX B*	BSC-BH 1	BSC-BH 2
100 (maximum)	22	15	18	14	14	10	13	11	15	27
99.7	12	14	14	8	4	7	10	9	13	12
99	10	11	12	4	2	6	9	9	12	11
95	8	8	9	3	2	4	7	6	10	8
90	7	7	8	2	2	4	6	5	9	6

* Excludes periods of extended coking.

TABLE A-13. COM DAILY AVERAGE ANALYSIS- EXTENDED COKING

Summary	Battery			
	USX 1	**USX 2**	**USX 3**	**USX 19**
Average opacity	7	6	8	6
Period of data	8/98-1/00	8/98-1/00	8/98-1/00	8/98-1/00
Duration (mos.)	18	18	18	18
Date of Startup or Rebuild	1955	1955	1955	1951
Height (m)	4	4	4	4
Type	gun flue	gun flue	gun flue	underjet
Percentiles of daily averages	**Battery**			
	USX 1	**USX 2**	**USX 3**	**USX 19**
100 (maximum)	24	20	20	43
99.7	21	19	18	28
99	19	16	17	21
95	15	13	15	11
90	13	11	13	10

A.8 REFERENCES

1. Memorandum, S. George and E. Kong, RTI, to L. Melton, EPA:OAQPS:ESD, October 14, 1997, Site visit report for US Steel Clairton Works in Clairton, Pennsylvania.

2. Memorandum, S. George and E. Kong, RTI, to L. Melton, EPA:OAQPS:ESD, December 15, 1997, Site visit report for Bethlehem Steel Burns Harbor Division in Chesterton, Indiana.

3. Memorandum, M. Branscome, RTI, to L. Melton, EPA: OAQPS:ESD, June 8, 1999, Site visit report to USS Clairton Works, Clairton, Pennsylvania.

4. Memorandum, L. Melton, EPA:OAQPS:ESD, September 25, 2000, Site visit report for New Boston Coke Corporation in New Boston, Ohio.

5. Memorandum, S. Burns and M. Branscome, RTI, to L. Melton, EPA: OAQPS:ESD, February 1, 2000, Summary of conference call between EPA and representatives of the American Coke and Coal Chemicals Institute (ACCCI) to discuss the diagnosis and repair of the causes of high opacity pushes.

6. Memorandum, S. George and M. Branscome, RTI, to L. Melton, EPA:OAQPS:ESD, June 23, 1999, Summary of meeting between EPA and AISI/ACCCI Coke Oven Environmental Task Force.

7. Memorandum with attachments, S. Burns, RTI, to Docket, July 1998, Data from RTI Project Database compiled from EPA section 114 survey responses and industry.

8. Electronic mail, J. Garzella, Acme Steel, to EPA, March 1999, Transmitting pushing data for Batteries 1 and 2..

9. Letter and attachment, S. Felton, AK Steel Corporation, to L. Melton, EPA:OAQPS:ESD, October 28, 1998, Enclosing controlled pushing emissions data.

10. Letter and attachment, R. Zavoda, LTV Steel Company, to L. Melton, EPA:OAQPS:ESD, November 29, 1999, Conveying pushing opacity data for the Warren, OH coke plant.

11. Portsmouth Local Air Agency, to EPA, New Boston Coke Corporation pushing opacity reports from July to October, 1999.

12. Facsimile and attachment, P. Centofanti, Portsmouth Local Air Agency (PLAA), to S. George, RTI, January 19, 1999, Enclosing a letter from M. Mehalovich, New Boston Coke Corporation, to PLAA with self-monitoring reports.

13. Facsimile, Method 9 Pushing Data for USX Clairton, April 29, 1999..

14. Letter and attachment, S. Felton, AK Steel Corporation, to M. Branscome, RTI, June 1, 1999, Enclosing data pertaining to the pushing study at the Wilputte Battery in Middletown, Ohio.

15. Memorandum and attachment, G. Ossman, Bethlehem Steel, to M. Branscome, RTI, June 11, 1999, Bethlehem Steel, Burns Harbor coke oven pushing opacity data.

16. Letter and attachment, R. Zavoda, LTV Steel Company, to L. Melton, EPA:OAQPS:ESD, November 29, 1999, Conveying pushing opacity data for the Chicago, IL coke plant.

17. Letter and attachments, J. Heintz, National Steel Corporation, to L. Melton, EPA:OAQPS:ESD, December 14, 1999, Enclosing data sheets for pushing and travel observations made at the #5 coke battery in Ecorse, Michigan.

18. Memorandum, L. Melton, EPA:OAQPS:ESD, July 27, 2000, Site visit report for Empire Coke Company in Tuscaloosa, Alabama.

19. Letter and attachments, D. Lewis, Empire Coke Company, to A. Vervaert, EPA:OAQPS:ESD, January 25, 1999, Follow up to site visit describing unique differences of Semet-Solvay battery design, and enclosing pushing opacity observations, potential pushing emissions estimate, and Semet-Solvay horizontal flue coke oven heat flow diagram.

20. Letter, D. Lewis, Empire Coke Company, to A. Vervaert, EPA:OAQPS:ESD, July 28, 2000, Summarizing discussion on conference call, July 12, 2000, regarding plant operations.

21. Electronic mail, D. Lewis, Empire Coke Company, to A. Vervaert, EPA:OAQPS:ESD, August 22, 2000, Summary of and comments regarding conference call with EPA.

22. Electronic mail, D. Lewis, Empire Coke Company, to A. Vervaert, EPA:OAQPS:ESD, August 25, 2000, Summary and follow up to two recent conference calls about Empire Coke subcategory.

23. Letter and attachments, D. Lewis, Empire Coke Company, to A. Vervaert, EPA:OAQPS:ESD, October 19, 2000, Attaching comments on draft language for horizontal flue coke oven batteries.

24. Letter, R. Waddell, Jewell Coal & Coke, to L. Melton, EPA:OAQPS:ESD, March 12, 1999, Recommendation for work practice and documentation pushing MACT.

25. Letter, R. Waddell, Jewell Coal & Coke, to L. Melton, May 24, 1999, regarding MACT standards for pushing, quenching, and battery stacks.

26. Facsimile, R. Waddell, Jewell Coal & Coke, to L. Melton, EPA:OAQPS:ESD September 1, 1999, Recommendation for work practice pushing MACT.

27. Letter, R. Waddell, Jewell Coal & Coke, Vansant, VA, to A. Vervaert, EPA:OAQPS:ESD, September 19, 2000, Comments on proposed pushing MACT standard for non-recovery coke batteries.

28. Letter, G. Bradley Jr., Indiana Harbor Coke Company, to L. Melton, EPA:OAQPS:ESD, August 16, 2000, Information on compliance test conducted on baghouse.

29. Report, Battery No. 1 Coke Push Shed Particulate Emission Control System at Shenango Incorporated, BCM Engineers, February 1988.

30. Letter and attachments, A. Ossman III, Bethlehem Steel Corporation, to L. Melton, EPA:OAQPS:ESD, July 6, 2000, Enclosing summary table and sample calculations from a 1997 stack test performed at Bethlehem Steel's Lackawanna Coke Division.

31. Stationary Source Sampling Report, Particulate Emissions Compliance Testing, Pushing Process Baghouse Outlet, #2 Coke Battery at Armco, Inc., Middletown, Ohio, Entropy Environmentalists, December 1982.

32. Report, Emissions Testing of Combustion Stack and Pushing Operations at Coke Battery No. 2 at Bethlehem Steel Corporation's Burns Harbor Division in Chesterton, Indiana, EPA 454/R-99-001a, February 1999.

33. Report, Compliance Demonstration No. 13, 14, 15 Battery Pushing Emissions Control at US Steel, Clairton Works, Chester Environmental, December 1993.

34. Report, Compliance Demonstration No. 7, 8, and 9 Battery Pushing Emissions Control at US Steel Clairton Works, Chester Environmental, April 1994.

35. Report, Compliance Demonstration No. 1, 2, and 3 Battery Pushing Emissions Control at US Steel Clairton Works, Chester Environmental, April 1994.

36. Report, Compliance Testing Performed at Koppers Industries, Inc., Dolomite, Alabama, Clean Air Engineering, December 13, 1990.

37. Report, Emission Evaluation of Batteries 1B and 2 Pushing Emissions Control System, Battery 1B Combustion Stack, Battery 2 Combustion Stack, Koppers Industries

Monessen Coke Plant, Monessen, Pennsylvania, Optimal Technologies, December 6, 1996.

38. Report, Particulate Matter in Exhaust Gases from the West Pushing Emission Control Baghouse Stack at US Steel Gary Works, May 1983.

39. Report, Mass Emission Tests Conducted on the Coke Battery Positive Pushing Control System in Birmingham, Alabama, Prepared by Guardian Systems Inc., for Jim Walters Resources, November 1984..

40. Report, Mass Emission Tests Conducted on Coke Battery #1 Positive Pushing Control System at ABC Coke, Tarrant, Alabama, Guardian Systems, Inc, September 9 - 11 1985.

41. Report, Emissions Testing of Combustion Stack and Pushing Operations at Coke Battery No. 5/6 at ABC Coke in Birmingham, Alabama, EPA 454/R-99-002a, February 1999.

42. Report, Compliance Particulate Emission Determination of the Coke Battery "A" Scrubber Stack for Bethlehem Steel Corporation, BCM Engineers, October 1990.

43. Report, Particulate Emission Study Performed for US Steel Corporation at the Gary Works Coke Oven Quench Cars, Car Nos. 9119 and 9120, Mostardi-Platt Associates, June 18, 1990.

44. Report, Particulate Emission Compliance Study Performed for US Steel Group Gary Works Plant No. 2 Coke Battery Scrubber, Mostardi Platt, March 12, 1997.

45. Report, Coke Quench Car Compliance Demonstration at Erie Coke Corporation, Chester Environmental, April 1994

46. Report, Compliance Demonstration Coke Quench Car Exhaust Stack at Erie Coke Corporation, Advanced Technology Systems, May 1995.

47. Report, Measurement of Particulate Matter Emissions From a Coke Quench Car Scrubber Exhaust Duct Compliance Demonstration at Erie Coke Corporation, Advanced Technology Systems, September 1996.

48. Facsimile, R. Zavoda, LTV Steel Company, to L. Melton, EPA:OAQPS:ESD, September 29, 2000, Attaching test results from Warren coke plant Chemico quench car system.

49. Facsimile, R. Zavoda, LTV Steel Company, to L. Melton, EPA:OAQPS:ESD, September 18, 2000, Attaching test results from Warren coke plant Chemico quench car system.

50. Facsimile, GCS Environmental to L. Melton, September 5, 2000, Copy of letters dated November 18, 1985 and December 5, 1989, regarding coke side emissions control gas cleaning car compliance demonstration at National Steel.

51. Test Report for National Steel, Granite City. Pushing Emission Test Conducted November 1989.

52. Report, Particulate Emissions Testing No. 2 Cokeside Emissions Control Gas Cleaning Car Scrubber Stack Exhaust Coke Battery "A" Granite City Steel, The Almega Corporation, December 1980

53. Letter and attachments, A. Ossmann, to A. Vervaert, EPA:OAQPS:ESD, January 12, 1999, Enclosing COMS data from battery stacks on coke oven batteries 1 & 2 at Bethlehem Steel's Burns Harbor Facility.

54. Letter, A. Ossman, Bethlehem Steel Corporation, to EPA, August 27, 1999, Underfire Opacity Data for Burns Harbor Coke Oven Battery Nos. 1 & 2.

55. Letter, W. Graeser, USS Clairton Works, to L. Melton, EPA:OAQPS:ESD, May 4, 1999, Conveying COMS data following plant visit by EPA.

56. Letter and attachments, W. Graeser, U.S. Steel, to L. Melton, EPA:OAQPS:ESD, August 5, 1999, Enclosing COMS data for Clairton batteries and data relative to the Allegheny County Standards for batteries 13, 14, 15, 20, and B.

57. Letter and attachment, W. Graeser, US Steel Company, to L. Melton, EPA:OAQPS:ESD, November 13, 1999, Conveying batery stack COMS opacity data for Batteries #1 and #3.

58. Letter and attachments, W. Graeser, U.S. Steel Clairton Works, to L. Melton, EPA:OAQPS:ESD, June 6, 2000, Stating a desire for a work practice standard for battery stacks, and enclosing graphs of battery stack opacity data and random descriptions of repairs in response to high stack opacity.

59. Electronic mail, B. Graeser, US Steel Corporation, to M. Branscome, RTI, September 15, 2000, Response to a request for information about COMS data from US Steel, Clairton Works.

60. ICR Response, T. Easterly, Bethlehem Steel Corporation, to M. Hinson, EPA:OAQPS:ESD, May 1998, ICR response for Bethlehem Steel Corporation Burns Harbor Division.

61. Letter and attachments, H. McCollum, USS Clairton Works, to L. Melton, EPA:OAQPS:ESD, February 9, 1999, Enclosing USS - Gary Works COMS data.

62. Letter, J. Gean, USS Gary Coke Operations, to L. Melton, EPA:OAQPS:ESD, September 1, 2000, Conveying 1999 COMS data for batteries 2, 3, 5, & 7.

63. Letter, J. Gean, USS Gary Coke Operations, to L. Melton, EPA:OAQPS:ESD, August 31, 2000, Conveying COMS data for Batteries 2, 3, 5 & 7.

64. Letter and attachments, H. McCollum, USS Clairton Works, to L. Melton, EPA:OAQPS:ESD, March 5, 1999, regarding US Steel Gary Works COMS data: start-up, shut-Down, malfunction and maintenance.

65. Letter and attachments, W. Graeser, USS Clairton Works, to S. George, Research Triangle Institute, May 13, 1999, regarding USS Gary Works COMS data: start-up, shut-down, malfunction and maintenance.

66. Electronic mail, J. Gean, US Steel Corporation, to M. Branscome, RTI, September 19, 2000, Response to a request for information about COMS data from US Steel, Gary Works.

APPENDIX B

OPACITY DATA FOR PUSHING--AVERAGE PER PUSH

TABLE B-1. USS CLAIRTON PUSHING DATA

Date	Battery	Oven	Time	Average 6 highest consecutive
4/21/99	7	A24	13:45	0.0
4/21/99	7	A26	13:55	1.7
4/21/99	7	A28	14:05	1.0
4/21/99	7	A30	14:22	2.5
4/21/99	7	B1	14:31	0.8
4/21/99	7	B3	14:43	4.0
4/21/99	7	B5	14:53	2.5
4/21/99	7	B7	15:03	0.8
4/20/99	8	B17	14:51	0.0
4/20/99	8	B19	15:03	0.0
4/20/99	8	B21	15:14	0.0
4/20/99	8	B23	15:25	0.0
4/20/99	8	B25	16:08	0.0
4/20/99	8	B27	16:19	0.0
4/20/99	8	B29	16:30	0.0
4/20/99	8	B31	16:41	2.5
4/21/99	8	A3	14:37	0.0
4/21/99	8	A5	14:48	0.0
4/21/99	8	A7	14:58	0.0
4/21/99	8	A9	15:09	0.0
4/22/99	8	B16	13:20	12.5
4/22/99	8	B18	13:33	10.8
4/22/99	8	B20	13:44	26.7
4/22/99	8	B22	13:54	5.0
4/22/99	8	B24	14:05	5.8
4/22/99	8	B26	14:16	7.5
4/22/99	8	B28	14:26	1.7
4/22/99	8	B30	14:37	9.2
4/20/99	9	A19	14:57	0.0
4/20/99	9	A21	15:08	0.0
4/20/99	9	A23	15:19	0.0
4/20/99	9	A25	16:03	0.0
4/20/99	9	A27	16:14	0.0
4/20/99	9	A29	16:25	0.0
4/20/99	9	A31	16:36	5.8
4/20/99	9	B2	16:53	5.8
4/21/99	9	B24	13:38	0.8
4/21/99	9	B26	13:49	23.3
4/21/99	9	B28	14:00	0.0
4/21/99	9	B30	14:10	3.3
4/21/99	9	C1	14:16	0.0
4/22/99	9	A16	13:15	5.8
4/22/99	9	A18	13:26	17.5
4/22/99	9	A20	13:38	12.5
4/22/99	9	A22	13:49	4.2
4/22/99	9	A24	14:00	17.5
4/22/99	9	A26	14:10	14.2
4/22/99	9	A28	14:21	4.2

TABLE B-1. USS CLAIRTON PUSHING DATA (continued)

Date	Battery	Oven	Time	Average 6 highest consecutive
4/22/99	9	A30	14:31	50.0
4/20/99	13	A26	13:21	0.0
4/20/99	13	B1	13:44	0.0
4/20/99	13	B3	13:55	0.0
4/20/99	13	B5	14:05	0.0
4/20/99	13	B7	14:15	1.0
4/20/99	13	B9	14:26	2.0
4/20/99	13	B11	14:36	0.0
4/20/99	13	B13	14:42	0.0
4/22/99	13	B2	10:36	5.0
4/22/99	13	B4	10:47	23.0
4/22/99	13	B6	10:58	17.0
4/22/99	13	B8	11:10	9.0
4/22/99	13	B10	11:20	16.0
4/22/99	13	B12	11:30	6.0
4/22/99	13	B14	11:41	15.0
4/22/99	13	B16	11:52	15.8
4/20/99	14	B23	13:16	2.5
4/20/99	14	B25	13:26	0.0
4/20/99	14	B27	13:32	2.5
4/20/99	14	B29	13:38	25.0
4/21/99	14	A9	11:10	1.7
4/21/99	14	A11	11:21	1.7
4/21/99	14	A13	11:35	5.0
4/21/99	14	A15	11:46	1.7
4/21/99	14	A17	11:58	3.3
4/21/99	14	A19	12:09	3.3
4/21/99	14	A21	12:20	8.3
4/21/99	14	A23	12:31	3.3
4/20/99	15	A2	13:49	0.0
4/20/99	15	A4	13:59	0.0
4/20/99	15	A6	14:10	0.0
4/20/99	15	A8	14:20	0.0
4/21/99	15	B9	11:15	29.2
4/21/99	15	B11	11:26	7.5
4/21/99	15	B13	11:40	2.5
4/21/99	15	B15	11:50	15.0
4/21/99	15	B17	12:02	17.5
4/21/99	15	B19	12:14	10.8
4/21/99	15	B21	12:26	5.0
4/22/99	15	A1	10:31	5.8
4/22/99	15	A3	10:41	1.7
4/22/99	15	A5	10:52	13.3
4/22/99	15	A7	11:03	9.2
4/22/99	15	A9	11:15	5.0
4/22/99	15	A11	11:25	7.5
4/22/99	15	A13	11:36	7.5
4/22/99	15	A15	11:46	4.2

TABLE 2. BETHLEHEM STEEL, BURNS HARBOR

Date	Battery	Oven	Time	Average opacity
4/7/99	1	101	7:23	5.8
4/7/99	1	111	7:40	15.8
4/7/99	1	121	7:51	10.8
4/7/99	1	131	8:05	7.5
4/7/99	1	141	8:17	10.8
4/7/99	1	151	8:31	10.8
4/7/99	1	161	8:42	15.0
4/7/99	1	171	8:53	30.0
4/13/99	1	148	8:02	15.0
4/13/99	1	158	8:12	21.7
4/13/99	1	168	8:22	22.5
4/13/99	1	171	11:28	20.0
4/13/99	1	181	11:39	10.0
4/13/99	1	191	11:50	20.8
4/13/99	1	103	12:01	23.3
4/13/99	1	113	12:10	19.2
4/13/99	1	123	12:20	15.8
4/13/99	1	133	12:30	22.5
4/14/99	1	163	8:07	0.0
4/14/99	1	173	8:16	5.0
4/14/99	1	183	8:27	17.5
4/14/99	1	105	8:41	2.5
4/14/99	1	115	8:55	10.8
4/14/99	1	125	9:07	7.5
4/14/99	1	135	9:19	8.3
4/14/99	1	145	9:31	10.8
4/14/99	1	155	9:44	20.8
4/14/99	1	165	9:56	5.8
4/15/99	1	159	7:52	25.0
4/15/99	1	169	8:05	7.5
4/15/99	1	179	8:17	11.7
4/15/99	1	189	8:27	20.8
4/15/99	1	102	8:39	40.0
4/15/99	1	112	8:51	20.0
4/15/99	1	122	9:02	15.0
4/15/99	1	132	9:14	15.8
4/15/99	1	142	9:26	24.2
4/15/99	1	152	9:37	21.7
4/19/99	1	186	8:46	18.3
4/19/99	1	108	8:58	23.3
4/19/99	1	118	9:13	9.2
4/19/99	1	128	9:22	19.2
4/19/99	1	138	9:32	14.2
4/19/99	1	148	9:43	12.5
4/19/99	1	158	9:56	11.7
4/6/99	2	291	10:29	16.7
4/6/99	2	203	10:42	20.8
4/6/99	2	213	10:53	7.5
4/6/99	2	223	11:07	10.0

TABLE 2. BETHLEHEM STEEL, BURNS HARBOR (continued)

Date	Battery	Oven	Time	Average opacity
4/6/99	2	233	11:17	2.5
4/13/99	2	283	9:00	26.7
4/13/99	2	205	9:15	22.5
4/13/99	2	215	9:36	24.2
4/13/99	2	225	9:49	31.7
4/13/99	2	235	9:59	16.7
4/13/99	2	245	10:11	12.5
4/13/99	2	255	10:41	6.7
4/13/99	2	265	10:51	12.5
4/13/99	2	275	11:01	10.8
4/13/99	2	285	11:11	14.2
4/14/99	2	259	10:02	15.0
4/14/99	2	269	10:11	14.2
4/14/99	2	279	10:21	17.5
4/14/99	2	202	10:36	35.0
4/14/99	2	212	10:47	7.5
4/14/99	2	222	10:58	5.8
4/14/99	2	232	11:07	20.0
4/15/99	2	206	9:48	16.7
4/15/99	2	216	9:59	25.8
4/15/99	2	226	10:10	20.8
4/15/99	2	236	10:21	6.7
4/15/99	2	246	10:31	2.5
4/15/99	2	256	10:42	10.0
4/15/99	2	266	10:52	6.7
4/15/99	2	276	11:04	1.7
4/15/99	2	286	11:14	7.5
4/15/99	2	208	11:26	10.8
4/15/99	2	218	11:38	10.0
4/15/99	2	228	11:48	6.7
4/15/99	2	238	12:05	2.5
4/19/99	2	213	10:14	14.2
4/19/99	2	223	10:24	20.0
4/19/99	2	233	10:36	10.8
4/19/99	2	243	10:46	23.3
4/19/99	2	253	10:57	12.5
4/19/99	2	263	11:11	14.2
4/19/99	2	273	11:23	23.3
4/20/99	2	227	8:32	1.7
4/20/99	2	237	8:43	20.0
4/20/99	2	247	8:54	9.2
4/20/99	2	257	9:07	15.0
4/20/99	2	277	9:34	8.3
4/20/99	2	287	10:07	1.7
4/20/99	2	209	10:22	18.3
4/20/99	2	219	10:38	15.8

TABLE B-3. NEW BOSTON COKE

Date	Oven	Average Opacity
1/11/99	23	9.2
	5	14.2
	15	10.8
	25	10.8
	35	9.2
1/12/99	2	15.0
	12	10.0
	22	10.8
	32	14.2
	42	7.5
1/13/99	1	16.7
	11	15.8
	21	11.7
	31	10.8
	41	10.8
7/27/99	42	10.8
	52	12.5
	62	13.3
	72	15.0
	4	12.5
7/28/99	43	13.3
	53	13.3
	63	15.0
	73	17.5
	5	10.8
7/30/99	34	13.3
	44	12.5
	54	14.2
	64	15.8
	74	15.0
8/2/99	3	11.7
	13	11.7
	23	11.7
	33	14.2
	43	13.3
8/3/99	47	13.3
	57	15.8
	67	14.2
	77	13.3
	9	15.0
8/4/99	64	13.3
	74	15.0
	6	12.5
	16	11.7
	26	12.5
8/10/99	47	13.3
	57	11.7

TABLE B-3. NEW BOSTON COKE (continued)

Date	Oven	Average Opacity
	67	14.2
	77	10.8
	9	13.3
8/12/99	73	13.3
	5	10.8
	15	10.8
	25	12.5
	35	10.8
8/13/99	72	11.7
	4	12.5
	14	15.8
	24	12.5
	34	10.0
8/17/99	43	9.2
	53	15.8
	63	10.8
	73	15.8
	5	15.8
8/18/99	57	11.7
	67	13.3
	77	16.7
	9	14.2
	19	13.3
8/19/99	61	12.5
	71	11.7
	3	15.8
	13	12.5
	23	14.2
8/24/99	43	11.7
	53	11.7
	63	9.2
	73	14.2
	5	15.0
8/25/99	7	13.3
	17	12.5
	27	10.0
	37	11.7
	47	13.3
8/27/99	3	15.0
	13	15.0
	23	9.2
	33	14.2
	43	10.8
8/30/99	17	17.5
	27	15.0
	37	10.8

TABLE B-3. NEW BOSTON COKE (continued)

Date	Oven	Average Opacity
	47	10.8
	57	17.5
9/1/99	15	8.3
	25	9.2
	35	10.8
	45	19.2
	55	11.7
9/2/99	64	12.5
	74	9.2
	6	7.5
	16	14.2
	26	13.3
9/7/99	52	13.3
	62	9.2
	72	12.5
	4	16.7
	14	9.2
9/8/99	27	10.8
	37	9.2
	47	11.7
	57	10.8
	67	13.3
9/10/99	8	12.5
	18	12.5
	28	6.7
	38	9.2
	48	7.5
9/14/99	42	11.7
	52	12.5
	62	13.3
	72	14.2
	4	10.8
9/15/99	15	7.5
	25	9.2
	35	13.3
	45	6.7
	55	9.2
9/17/99	26	8.3
	36	11.7
	46	11.7
	56	10.0
	66	9.2
9/20/99	25	10.0
	35	10.0
	45	11.7
	55	11.7

TABLE B-3. NEW BOSTON COKE (continued)

Date	Oven	Average Opacity
	65	9.2
9/21/99	16	10.0
	26	10.0
	36	7.5
	46	10.0
	56	10.8
9/24/99	41	11.7
	51	10.0
	61	10.8
	71	8.3
	3	7.5
9/27/99	45	11.7
	55	9.2
	65	11.7
	75	9.2
	17	8.3
9/28/99	2	9.2
	12	8.3
	22	9.2
	32	11.7
	42	8.3
9/30/99	37	9.2
	47	10.8
	57	10.8
	67	11.7
	77	10.8
10/4/99	23	10.8
	33	12.5
	43	9.2
	53	10.0
	63	9.2
10/5/99	77	10.0
	19	10.0
	29	7.5
	39	10.0
	49	11.7
10/6/99	66	11.7
	76	11.7
	18	13.3
	28	7.5
	38	10.0
10/19/99	55	13.3
	65	11.7
	75	15.8
	7	13.3
	17	11.7

TABLE B-3. NEW BOSTON COKE (continued)

Date	Oven	Average Opacity
10/20/99	56	10.0
	66	13.3
	76	14.2
	8	11.7
	18	14.2
10/22/99	42	12.5
	52	10.0
	62	10.0
	72	14.2
	4	10.8
10/26/99	35	13.3
	45	12.5
	55	10.8
	65	10.8
	75	11.7
10/27/99	52	11.7
	62	12.5
	72	12.5
	4	9.2
	14	10.8
10/29/99	22	9.2
	32	9.2
	42	10.8
	52	7.5
	62	11.7

TABLE B-4. ACME STEEL

BATTERY 1				BATTERY 2			
Date	**Time**	**Oven**	**Opacity**	**Date**	**Oven**	**Time**	**Opacity**
3/21/99	11:00:25	b21	19.2	3/8/99	c19	7:20:43	5.8
3/21/99	12:53:50	a8	19.2	3/8/99	d8	8:31:32	10.0
3/21/99	9:03:18	a21	20.0	3/8/99	d11	9:10:46	5.8
3/21/99	9:10:27	a23	10.8	3/8/99	d13	9:16:53	8.3
3/21/99	13:16:09	a14	20.0	3/8/99	d15	9:24:27	10.0
3/11/99	12:13:00	a21	14.2	3/8/99	d17	9:35:07	14.2
3/18/99	10:10:34	a7	15.8	3/8/99	d19	9:42:32	11.7
3/18/99	11:40:26	b3	17.5	3/8/99	c2	11:22:40	5.8
3/18/99	11:58:05	b7	17.5	3/8/99	c4	11:32:38	6.7
3/18/99	13:20:01	a11	17.5	3/8/99	c21	11:40:42	7.5
3/18/99	13:48:22	a15	14.2	3/8/99	c23	11:44:57	5.8
3/13/99	9:52:18	b17	9.2	3/8/99	c25	11:58:37	4.2
3/15/99	8:52:18	b9	3.3	3/8/99	d2	13:59:37	0.0
3/19/99	10:00:05	b7	6.7	3/9/99	c11	7:29:29	5.0
3/8/99	13:13:01	b25	15.8	3/9/99	c13	7:39:07	13.3
3/13/99	14:05:02	b2	16.7	3/9/99	c17	7:49:52	5.8
3/19/99	9:53:02	b5	16.7	3/9/99	c19	8:10:31	5.8
3/8/99	13:05:11	b23	17.5	3/9/99	c15	8:18:31	9.2
3/10/99	10:09:35	b15	5.0	3/9/99	d8	9:53:38	20.0
3/11/99	7:20:51	a13	8.3	3/9/99	d11	10:02:32	12.5
3/11/99	7:28:56	a15	7.5	3/9/99	d13	10:10:42	18.3
3/11/99	9:30:17	b11	5.8	3/9/99	d17	10:17:47	11.7
3/11/99	9:39:27	b13	5.8	3/9/99	d19	10:25:44	16.7
3/11/99	9:49:09	b15	5.0	3/9/99	d15	10:36:02	2.5
3/11/99	9:58:13	b17	7.5	3/9/99	c2	12:56:07	13.3
3/11/99	10:10:39	b19	7.5	3/9/99	c21	13:04:29	15.0
3/11/99	12:04:37	a4	11.7	3/9/99	c23	13:13:03	11.7
3/11/99	12:21:26	a23	7.5	3/9/99	c25	13:20:39	11.7
3/11/99	12:29:15	a25	5.8	3/9/99	c4	13:24:25	5.8
3/15/99	13:49:51	b13	17.5	3/10/99	c11	8:12:56	14.2
3/17/99	7:15:33	b20	6.7	3/10/99	c15	8:21:56	15.8
3/18/99	9:45:29	a3	7.5	3/10/99	c17	8:29:34	7.5
3/18/99	9:58:42	a5	11.7	3/10/99	c19	8:36:39	9.2
3/18/99	10:23:49	a9	7.5	3/10/99	c13	8:44:07	11.7
3/18/99	11:32:03	b1	9.2	3/10/99	d11	10:57:29	8.3
3/18/99	11:49:03	b5	12.5	3/10/99	d15	11:05:58	18.3
3/18/99	12:07:40	b9	8.3	3/10/99	d17	11:14:57	18.3
3/18/99	13:37:15	a13	11.7	3/10/99	d19	11:22:30	19.2
3/19/99	10:08:44	b9	11.7	3/10/99	d8	11:30:05	19.2
3/19/99	11:58:38	a19	12.5	3/10/99	d13	11:37:08	6.7
3/21/99	8:48:37	a2	20.0	3/10/99	c2	13:10:59	11.7
3/21/99	8:56:05	a4	10.0	3/10/99	C21	13:21:20	7.5
3/8/99	7:34:43	b11	9.2	3/10/99	C23	13:28:24	10.8
3/8/99	7:45:00	b13	10.8	3/10/99	C25	13:38:35	19.2
3/8/99	7:56:17	b15	11.7	3/10/99	C4	13:45:26	12.5
3/8/99	8:05:58	b17	8.3	3/11/99	c13	7:55:59	7.5

TABLE B-4. ACME STEEL (continued)

BATTERY 1				BATTERY 2			
Date	Time	Oven	Opacity	Date	Oven	Time	Opacity
3/8/99	8:16:38	b19	9.2	3/11/99	c15	8:04:00	3.3
3/8/99	9:53:54	a2	6.7	3/11/99	c17	8:12:36	5.8
3/8/99	10:04:32	a4	12.5	3/11/99	c19	8:23:52	5.8
3/8/99	10:13:58	a21	13.3	3/11/99	c11	8:33:09	9.2
3/8/99	10:22:46	a23	5.8	3/11/99	d8	10:18:40	13.3
3/8/99	10:33:25	a25	5.0	3/11/99	d11	10:28:45	7.5
3/8/99	12:46:00	b2	6.7	3/11/99	d13	10:36:19	10.8
3/8/99	12:53:01	b4	12.5	3/11/99	d15	10:45:34	19.2
3/8/99	13:22:43	b21	11.7	3/11/99	d17	10:54:07	13.3
3/10/99	7:29:48	a13	7.5	3/11/99	d19	11:01:27	4.2
3/10/99	7:47:25	a15	11.7	3/11/99	c2	13:21:58	9.2
3/10/99	7:56:17	a17	14.2	3/11/99	c4	13:28:28	7.5
3/10/99	8:04:30	a19	10.8	3/11/99	c21	13:36:01	5.0
3/10/99	9:56:43	b11	6.7	3/11/99	c23	13:44:07	6.7
3/10/99	10:24:13	b17	8.3	3/11/99	c25	13:50:24	5.8
3/10/99	10:36:38	b19	1.7	3/12/99	c11	7:43:51	8.3
3/10/99	10:48:18	b13	8.3	3/12/99	c13	7:50:34	8.3
3/10/99	12:20:52	a2	6.7	3/12/99	c15	7:57:12	6.7
3/10/99	12:28:58	a4	5.8	3/12/99	c17	8:03:47	2.5
3/10/99	12:36:56	a21	3.3	3/12/99	c19	8:12:13	6.7
3/10/99	12:44:36	a23	7.5	3/12/99	d8	10:32:30	14.2
3/10/99	12:58:43	a25	4.2	3/12/99	d11	10:39:11	8.3
3/11/99	7:10:06	a11	4.2	3/12/99	d13	10:45:54	17.5
3/11/99	7:37:25	a17	5.0	3/12/99	d15	10:52:57	18.3
3/11/99	7:46:09	a19	5.8	3/12/99	d17	11:01:33	13.3
3/11/99	11:56:16	a2	5.8	3/12/99	d19	11:09:42	10.0
3/13/99	9:29:26	b11	7.5	3/12/99	c2	13:13:53	10.8
3/13/99	9:36:48	b13	10.0	3/12/99	c4	13:20:52	11.7
3/13/99	9:44:06	b15	8.3	3/12/99	c21	13:31:56	15.8
3/13/99	10:01:23	b19	3.3	3/12/99	c23	13:42:03	8.3
3/13/99	12:03:15	a2	7.5	3/12/99	c25	13:51:16	8.3
3/13/99	12:11:22	a4	9.2	3/13/99	d8	10:11:47	5.8
3/13/99	12:19:00	a21	7.5	3/13/99	d11	10:21:08	19.2
3/13/99	12:26:40	a23	12.5	3/13/99	d13	10:28:34	10.0
3/13/99	12:34:26	a25	3.3	3/13/99	d15	10:36:50	16.7
3/13/99	14:13:31	b4	4.2	3/13/99	d17	10:44:30	8.3
3/15/99	8:19:56	b1	4.2	3/13/99	d19	10:31:34	11.7
3/15/99	8:27:19	b3	5.8	3/13/99	c2	12:42:23	10.8
3/15/99	8:34:53	b5	5.0	3/13/99	c4	12:50:35	20.0
3/15/99	8:44:11	b7	3.3	3/13/99	c21	13:39:08	8.3
3/15/99	11:00:36	a11	4.2	3/13/99	c23	13:47:58	10.0
3/15/99	11:13:55	a13	5.8	3/13/99	c25	13:55:40	6.7
3/15/99	11:26:58	a15	5.0	3/14/99	c11	7:47:35	10.0
3/15/99	11:34:53	a17	4.2	3/14/99	c13	7:56:33	17.5
3/15/99	11:48:14	a19	9.2	3/14/99	c15	8:03:33	10.8

TABLE B-4. ACME STEEL (continued)

BATTERY 1				BATTERY 2			
Date	Time	Oven	Opacity	Date	Oven	Time	Opacity
3/15/99	13:42:47	b11	9.2	3/14/99	c17	8:11:32	16.7
3/15/99	13:58:22	b15	11.7	3/14/99	c19	8:21:50	8.3
3/17/99	7:06:54	b19	4.2	3/14/99	d8	8:30:26	20.0
3/17/99	7:22:56	b22	4.2	3/14/99	d11	10:50:28	18.3
3/17/99	7:31:20	b24	6.7	3/14/99	d13	10:59:53	15.0
3/17/99	9:37:16	a1	7.5	3/14/99	d15	11:08:50	19.2
3/17/99	9:46:44	a3	5.0	3/14/99	d17	11:59:46	13.3
3/17/99	9:56:34	a5	4.2	3/14/99	d19	12:08:20	10.8
3/17/99	10:05:51	a7	5.8	3/15/99	c9	7:24:58	6.7
3/17/99	10:15:58	a9	5.0	3/15/99	d1	9:43:12	9.2
3/17/99	11:39:55	b1	1.7	3/15/99	d3	9:49:50	10.0
3/17/99	11:48:45	b3	5.0	3/15/99	d5	9:57:21	3.3
3/17/99	11:58:32	b5	10.0	3/15/99	d7	10:06:34	8.3
3/17/99	12:08:02	b7	7.5	3/15/99	d9	10:14:28	5.0
3/17/99	12:22:42	b9	9.2	3/15/99	d8	10:49:27	12.5
3/18/99	9:30:20	a1	5.8	3/15/99	c11	12:25:38	16.7
3/19/99	7:29:55	a3	9.2	3/15/99	c13	12:32:17	9.2
3/19/99	7:34:01	a5	6.7	3/15/99	c15	12:39:14	3.3
3/19/99	7:41:57	a7	4.2	3/15/99	c17	12:48:15	15.0
3/19/99	7:50:20	a9	5.8	3/15/99	c19	12:56:00	0.0
3/19/99	9:36:40	b1	4.2	3/16/99	d22	7:24:47	19.2
3/19/99	9:44:30	b3	5.0	3/16/99	d24	7:32:13	12.5
3/19/99	11:33:30	a11	5.8	3/16/99	d8	9:38:45	9.2
3/19/99	11:41:53	a15	4.2	3/16/99	c1	9:53:08	6.7
3/19/99	11:49:39	a17	7.5	3/16/99	c3	10:00:43	7.5
3/19/99	12:08:24	a13	6.7	3/16/99	c5	10:10:54	8.3
3/21/99	9:10:27	a25	5.8	3/16/99	c7	10:30:25	7.5
3/21/99	10:45:54	b2	10.0	3/16/99	c9	10:39:45	5.8
3/21/99	10:53:12	b4	10.0	3/16/99	d1	12:36:54	6.7
3/21/99	11:07:42	b23	5.8	3/16/99	d3	12:48:36	5.0
3/21/99	11:14:58	b25	10.0	3/16/99	d5	12:58:36	5.8
3/21/99	12:46:03	a6	3.3	3/16/99	d7	13:07:58	7.5
3/21/99	13:01:10	a10	10.8	3/17/99	d16	7:38:35	13.3
3/21/99	13:08:50	a12	10.0	3/17/99	d20	8:22:02	14.2
3/9/99	8:56:04	b11	7.5	3/17/99	d22	8:38:04	20.0
3/9/99	9:05:30	b13	9.2	3/17/99	d24	8:46:36	14.2
3/9/99	9:18:01	b15	6.7	3/17/99	c7	10:26:22	19.2
3/9/99	9:30:48	b17	5.8	3/17/99	c3	11:06:39	7.5
3/9/99	9:44:58	b19	5.0	3/17/99	c5	11:15:00	10.0
3/9/99	11:28:50	a2	4.2	3/17/99	c9	11:30:00	19.2
3/9/99	11:47:54	a21	6.7	3/17/99	d1	12:30:33	15.0
3/9/99	11:57:25	a23	3.3	3/17/99	d3	13:18:44	9.2
3/9/99	12:08:07	a25	5.8	3/17/99	d5	13:27:05	8.3
3/9/99	12:18:06	a4	6.7	3/17/99	d7	13:44:06	20.0
3/12/99	7:27:55	a17	8.3	3/18/99	d16	7:26:10	7.5

TABLE B-4. ACME STEEL (continued)

BATTERY 1				BATTERY 2			
Date	Time	Oven	Opacity	Date	Oven	Time	Opacity
3/12/99	7:35:57	a19	9.2	3/18/99	d18	7:33:12	18.3
3/12/99	8:26:38	b11	5.0	3/18/99	d20	7:40:19	17.5
3/12/99	8:37:12	b13	7.5	3/18/99	d8	7:53:57	3.3
3/12/99	8:46:45	b15	8.3	3/18/99	d22	8:03:43	13.3
3/12/99	10:15:12	b17	7.5	3/18/99	d24	8:17:39	15.8
3/12/99	10:24:22	b19	6.7	3/18/99	c1	10:38:33	9.2
3/12/99	11:24:34	a2	8.3	3/18/99	c3	10:51:01	7.5
3/12/99	11:34:56	a4	5.0	3/18/99	c5	11:02:09	9.2
3/12/99	11:45:02	a21	7.5	3/18/99	c7	11:13:23	7.5
3/12/99	11:52:39	a23	5.8	3/18/99	c9	11:22:02	17.5
3/12/99	12:00:12	a25	6.7	3/18/99	d1	11:20:36	18.3
3/14/99	7:40:03	a19	5.8	3/18/99	d3	12:31:20	17.5
3/14/99	9:35:03	b11	5.8	3/18/99	d7	12:42:21	20.0
3/14/99	9:43:12	b13	5.8	3/18/99	d9	12:52:49	10.8
3/14/99	9:51:18	b15	4.2	3/18/99	d5	13:12:13	7.5
3/14/99	9:59:12	b17	2.5	3/19/99	c1	8:01:29	4.2
3/14/99	10:41:21	b19	5.8	3/19/99	c5	8:10:31	3.3
3/14/99	12:33:53	a2	8.3	3/19/99	c7	8:19:23	15.8
3/14/99	12:58:19	a4	11.7	3/19/99	c9	8:27:10	19.2
3/14/99	13:18:15	a21	8.3	3/19/99	c3	8:36:02	5.0
3/14/99	13:36:08	a23	9.2	3/19/99	d1	10:21:24	19.2
3/14/99	13:52:14	a25	12.5	3/19/99	d5	10:29:55	10.8
3/16/99	8:13:35	a1	6.7	3/19/99	d7	10:40:12	8.3
3/16/99	8:22:20	a3	5.8	3/19/99	d9	10:47:45	13.3
3/16/99	8:31:52	a5	6.7	3/19/99	d3	10:57:53	10.0
3/16/99	8:40:03	a7	6.7	3/19/99	c11	12:54:32	6.7
3/16/99	8:47:48	a9	7.5	3/19/99	c13	13:04:08	11.7
3/16/99	11:20:21	b1	6.7	3/19/99	c17	13:13:58	7.5
3/16/99	11:28:50	b3	5.0	3/19/99	c19	13:22:35	5.0
3/16/99	11:36:06	b5	6.7	3/19/99	c15	13:32:16	3.3
3/16/99	11:44:42	b7	7.5	3/20/99	d1	7:27:17	19.2
3/16/99	11:52:38	b9	9.2	3/20/99	d3	7:35:17	19.2
3/16/99	13:46:55	a11	5.8	3/20/99	d5	7:42:18	15.8
3/16/99	13:54:30	a13	8.3	3/20/99	d7	7:49:23	17.5
3/19/99	13:50:58	b11	5.0	3/20/99	d9	7:56:46	5.8
3/20/99	7:19:15	b9	8.3	3/20/99	c11	9:13:53	10.0
3/20/99	8:33:59	a11	5.8	3/20/99	c13	9:21:55	14.2
3/20/99	8:41:35	a13	11.7	3/20/99	c15	9:29:59	5.8
3/20/99	8:49:12	a15	5.0	3/20/99	c17	9:38:28	19.2
3/20/99	8:56:47	a17	6.7	3/20/99	c19	9:46:22	4.2
3/20/99	9:04:47	a19	5.0	3/20/99	c2	13:33:17	20.0
3/20/99	10:32:49	b11	8.3	3/20/99	c4	13:40:31	5.8
3/20/99	10:40:53	b13	7.5	3/20/99	c21	13:47:58	8.3
3/20/99	10:48:10	b15	9.2	3/20/99	c23	13:54:44	6.7
3/20/99	10:56:15	b17	12.5	3/21/99	d11	7:32:41	10.0

TABLE B-4. ACME STEEL (continued)

BATTERY 1

Date	Time	Oven	Opacity
3/20/99	11:04:39	b19	5.8
3/20/99	12:52:21	a2	10.0
3/20/99	13:01:09	a4	7.5
3/20/99	13:09:36	a21	5.8
3/20/99	13:17:31	a23	3.3
3/20/99	13:24:50	a25	3.3

BATTERY 2

Date	Oven	Time	Opacity
3/21/99	d13	7:40:23	10.0
3/21/99	d15	7:46:55	8.3
3/21/99	d17	7:53:27	15.8
3/21/99	d19	8:00:41	7.5
3/21/99	c2	9:25:04	5.8
3/21/99	c4	9:32:26	7.5
3/21/99	c21	9:38:58	10.0
3/21/99	c23	9:45:34	9.2
3/21/99	c25	9:52:31	18.3
3/21/99	d2	11:23:22	2.5
3/21/99	d4	11:30:32	7.5
3/21/99	d21	11:39:00	3.3
3/21/99	d23	11:45:17	4.2
3/21/99	d25	11:51:55	5.0
3/21/99	c6	13:28:03	5.8
3/21/99	c8	13:35:54	5.0
3/21/99	c10	13:43:19	9.2
3/21/99	c12	13:50:43	12.5
3/21/99	c14	13:58:17	11.7

TABLE B-5. AK STEEL

Date	Oven	Time	Average opacity
3/8/99	52	8:38	10.8
3/8/99	72	9:03	16.7
3/8/99	82	9:20	16.7
3/8/99	64	11:33	21.7
3/8/99	74	11:46	16.7
3/8/99	84	12:03	15.0
3/8/99	6	12:18	19.0
3/8/99	16	12:30	12.5
3/8/99	26	12:41	17.5
3/8/99	28	14:32	25.0
3/8/99	38	14:43	13.3
3/8/99	48	14:52	20.8
3/8/99	58	15:05	22.5
3/8/99	68	15:18	10.0
3/8/99	78	15:30	13.3
3/9/99	18	9:53	24.2
3/9/99	28	10:03	25.0
3/9/99	38	10:12	10.8
3/9/99	48	10:21	18.3
3/9/99	58	10:34	25.8
3/9/99	1	11:58	17.5
3/9/99	21	12:21	11.7
3/9/99	31	12:31	9.2
3/9/99	41	12:39	15.8
3/10/99	21	8:34	12.5
3/10/99	31	8:45	11.7
3/10/99	41	8:57	10.0
3/10/99	61	9:22	17.5
3/10/99	71	9:34	15.8
3/10/99	81	9:46	10.0
3/10/99	3	9:58	9.2
3/10/99	23	11:16	9.2
3/10/99	53	11:26	15.0
3/10/99	73	11:55	18.3
3/10/99	83	12:06	11.7
3/10/99	5	12:19	15.8
3/10/99	15	12:30	12.5
3/10/99	25	12:40	18.3
3/10/99	33	12:51	19.2
3/10/99	43	13:16	15.8
3/10/99	45	13:27	20.8
3/11/99	55	9:04	7.5
3/11/99	65	9:14	20.8
3/11/99	75	9:24	18.3
3/11/99	7	9:36	18.3

TABLE B-6. NATIONAL, ECORSE

Date	Oven	Average Opacity
6/8/99	81	5.8
	83	0.0
	85	2.5
	2	2.0
	4	4.2
	6	0.8
	8	5.0
	10	0.0
6/22/99	18	0.0
	20	0.0
	22	0.0
	24	0.0
	26	0.0
	48	0.0
	50	2.5
	52	0.0
7/6/99	2	7.5
	6	4.2
	8	10.0
	10	13.3
	12	3.3
	14	6.7
	16	3.3
	18	3.3
7/20/99	72	0.0
	74	0.0
	76	0.8
	78	4.2
	80	1.7
	82	1.7
	84	0.0
	1	1.7
8/3/99	59	0.8
	61	0.8
	63	0.0
	65	0.0
	67	4.2
	69	0.8
	71	1.7
	73	0.8
8/17/99	2	2.5
	4	0.0
	6	2.5
	8	0.8

TABLE B-6. NATIONAL, ECORSE (continued)

Date	Oven	Average Opacity
	10	3.3
	12	3.3
	22	2.5
	24	3.3
8/31/99	62	0.0
	64	0.0
	66	0.8
	68	0.0
	70	0.0
	72	0.0
	74	0.0
	76	0.8
9/14/99	41	2.5
	43	0.8
	45	1.7
	47	1.7
	49	3.3
	51	3.3
	53	3.3
	55	5.8
9/30/99	27	0.0
	29	0.0
	31	0.0
	33	0.0
	35	0.0
	37	0.0
	39	0.0
	41	0.0
10/19/99	51	0.0
	53	0.8
	57	0.0
	59	1.7
	61	0.8
	63	0.0
	65	0.0
11/2/99	1	0.0
	3	0.0
	5	0.0
	7	0.0
	9	0.0
	11	0.0
	13	0.0
	15	0.0
11/16/99	53	0.8

TABLE B-6. NATIONAL, ECORSE (continued)

Date	Oven	Average Opacity
	55	0.0
	57	0.0
	59	0.0
	61	0.0
	63	0.0
	65	0.8
	67	0.0
12/1/99	2	4.2
	4	0.8
	6	0.0
	10	0.0
	12	0.0
	14	0.0
	16	0.0

TABLE B-7. LTV, WARREN, OH

Date	Oven	Average Opacity	Date	Oven	Average Opacity	Date	Oven	Average Opacity
10/01/98	A-20	7.5	01/01/99	b-15	15.8	06/01/99	C-11	16.0
	B-20	10.8		c-15	18.0		A-13	10.8
	C-20	12.0		a-17	12.5		B-13	10.0
10/02/98	A-15	14.2	01/02/99	C-2	12.0	06/02/99	B-8	12.5
	B-15	8.3		A-4	10.8		C-8	14.0
	C-15	9.0		B-4	7.5		A-10	15.8
10/03/98	B-14	8.3	01/03/99	C-26	14.0	06/03/99	B-9	11.7
	C-14	18.0		A-28	6.7		C-9	8.0
	A-16	12.5		B-28	10.0		A-11	5.0
10/04/98	C-15	9.0	01/04/99	C-21	17.0	06/04/99	A-16	11.7
	A-17	14.2		A-23	7.5		B-16	6.7
	B-17	9.2		B-23	11.7		C-16	15.0
10/05/98	B-4	10.0	01/05/99	A-20	7.5	06/05/99	C-3	14.0
	C-4	17.0		B-20	11.7		A-5	7.5
	B-6	7.5		C-20	12.0		B-5	14.2
10/06/98	B-1	10.8	01/06/99	C-15	10.0	06/06/99	A-27	12.5
	C-1	8.0		A-17	10.0		B-27	7.5
	A-3	8.3		B-17	14.2		C-27	7.0
10/07/98	C-20	14.0	01/07/99	B-18	0.0	06/07/99	B-20	3.0
	A-22	7.5		C-18	8.0		C-20	3.0
	B-22	12.5		A-20	19.2		A-22	4.2
10/08/98	B-22	15.8	01/08/99	A-11	13.3	06/08/99	B-15	6.7
	C-22	12.0		B-11	7.5		B-17	3.3
	A-24	12.5		C-11	14.0		B-16	17.5
10/09/98	C-12	13.0	01/09/99	A-24	7.5	06/09/99	B-8	8.3
	A-14	9.2		B-24	11.7		A-10	5.0
	B-14	14.2		C-24	6.0		B-10	10.8
10/10/98	A-16	6.7	01/10/99	B-1	14.2	06/10/99	A-7	11.7
	B-16	12.5		C-1	12.0		B-7	4.2
	C-16	9.0		A-3	10.0		A-9	8.3
10/11/98	B-13	15.0	01/11/99	A-27	12.5	06/11/99	B-12	5.0
	C-13	9.0		C-27	7.0		C-12	13.0
	A-15	12.5		A-29	10.0		A-14	7.5
10/12/98	A-8	12.5	01/12/99	C-22	10.0	06/12/99	B-5	7.5
	B-8	6.7		A-24	6.7		C-5	12.0
	C-8	14.0		B-24	10.8		A-7	6.7
10/13/98	B-3	10.0	01/13/99	A-21	9.2	06/13/99	B-10	18.3
	C-3	9.0		C-21	11.0		C-10	15.0
	A-5	17.5		A-23	10.0		A-12	11.7
10/14/98	A-27	12.5	01/14/99	A-22	10.8	06/14/99	C-26	33.8
	B-27	15.0		B-22	12.0		A-26	16.7
	C-27	9.0		C-22	3.8		B-26	12.0
10/15/98	B-22	15.8	01/15/99	B-2	4.0	06/15/99	C-25	10.0

TABLE B-7. LTV, WARREN, OH (continued)

Date	Oven	Average Opacity	Date	Oven	Average Opacity	Date	Oven	Average Opacity
	C-22	11.0		C-2	1.3		A-25	5.0
	A-24	7.5		A-4	5.8		B-25	10.8
10/16/98	B-23	13.3	01/16/99	C-8	9.0	06/16/99	B-18	8.3
	C-23	12.0		A-10	5.0		C-18	9.0
	A-25	7.5		B-10	14.2		A-20	11.7
10/17/98	A-18	14.2	01/17/99	C-13	14.0	06/17/99	A-11	12.5
	B-18	7.5		A-15	7.5		B-11	10.0
	C-18	15.0		B-15	12.5		C-11	8.0
10/18/98	A-17	11.7	01/18/99	A-2	10.0	06/18/99	A-12	10.0
	B-17	6.7		B-2	16.7		B-12	12.5
	C-17	11.0		C-2	14.0		C-12	10.0
10/19/98	C-10	10.0	01/19/99	B-28	17.5	06/19/99	A-11	10.8
	A-12	15.8		A-1	14.2		B-11	7.5
	B-12	10.8		B-1	15.8		C-11	11.0
10/20/98	A-7	10.8	01/20/99	C-23	13.0	06/20/99	C-8	10.0
	B-7	7.5		A-25	16.7		A-10	13.3
	C-7	16.0		B-25	17.5		B-10	10.8
10/21/98	A-4	12.5	01/21/99	C-20	16.0	06/21/99	B-3	6.0
	B-4	7.5		A-22	10.8		C-3	5.0
	C-4	8.0		B-22	15.0		A-5	10.0
10/22/98	B-26	8.3	01/22/99	B-15	12.0	06/22/99	C-2	12.0
	C-26	16.0		C-15	18.0		A-4	12.5
	A-28	12.5		A-17	13.3		B-4	8.3
10/23/98	A-25	15.0	01/23/99	A-14	12.5	06/23/99	C-17	13.0
	B-25	6.7		B-14	10.8		A-19	14.2
	C-25	9.0		C-14	16.0		B-19	9.2
10/24/98	A-20	10.8	01/24/99	B-11	9.2	06/24/99	C-19	11.3
	B-20	6.7		C-11	18.0		A-21	7.0
	C-20	9.0		A-13	10.0		B-21	15.0
10/25/98	A-23	14.2	01/25/99	C-4	15.0	06/25/99	B-20	11.7
	B-23	6.7		A-6	14.2		C-20	10.0
	C-23	14.0		B-6	9.2		A-22	15.0
10/26/98	C-10	16.0	01/26/99	A-3	9.2	06/26/99	C-17	11.0
	A-14	15.8		B-3	17.5		A-19	14.2
	B-14	8.3		C-3	9.0		B-19	8.3
10/27/98	A-9	5.8	01/27/99	B-27	14.2	06/27/99	A-16	12.5
	B-9	15.0		C-27	18.0		B-16	9.2
	C-9	13.0		A-29	11.7		C-16	14.0
10/28/98	A-6	10.0	01/28/99	A-15	15.0	06/28/99	A-7	2.0
	B-6	15.8		B-15	9.2		B-7	4.0
	C-6	15.0		C-15	13.0		C-7	6.0
10/29/98	A-5	12.5	01/29/99	C-19	16.0	06/29/99	C-10	15.0
	B-5	10.0		A-21	10.0		A-12	10.0

TABLE B-7. LTV, WARREN, OH (continued)

Date	Oven	Average Opacity	Date	Oven	Average Opacity	Date	Oven	Average Opacity
	C-5	8.0		B-21	7.5		B-12	6.7
10/30/98	B-29	10.0	01/30/99	C-16	13.0	06/30/99	C-5	12.0
	A-2	9.2		A-18	7.5		B-26	11.7
	B-2	13.3		B-18	10.0		C-26	6.0
10/31/98	A-1	14.2	01/31/99	B-13	7.5	07/01/99	A-27	10.0
	B-1	8.3		C-13	19.0		B-27	5.8
	C-1	8.0		A-15	12.5		C-27	6.0
11/01/98	B-23	10.0	02/01/99	B-10	11.7	07/02/99	C-18	7.0
	C-23	6.0		C-10	15.0		A-20	8.3
	A-25	14.2		A-12	10.0		B-20	12.5
11/02/98	C-20	14.0	02/02/99	A-5	13.3	07/03/99	B-27	5.8
	A-22	15.0		B-5	10.0		C-27	11.0
	B-22	9.2		C-5	18.0		A-29	6.7
11/03/98	A-15	12.5	02/03/99	B-29	8.3	07/04/99	B-12	7.5
	A-17	7.5		A-2	6.7		C-12	6.0
	B-17	12.5		B-2	10.0		A-14	12.5
11/04/98	B-14	7.5	02/04/99	C-3	4.2	07/05/99	A-17	14.2
	A-13	11.7		A-1	5.0		B-17	10.8
	C-14	11.0		B-1	6.0		C-17	12.0
11/05/98	B-11	14.2	02/05/99	A-25	11.7	07/06/99	A-4	9.2
	C-11	12.0		B-25	7.5		B-4	5.8
	A-13	15.0		C-25	12.0		A-6	10.8
11/06/98	A-8	10.8	02/06/99	A-22	7.5	07/07/99	A-9	13.3
	B-8	11.7		B-22	11.7		B-9	5.0
	C-8	9.0		C-22	6.0		C-9	14.0
11/07/98	A-3	14.2	02/07/99	A-25	7.5	07/08/99	C-25	7.0
	B-3	7.5		B-25	6.7		A-27	7.0
	C-3	16.0		C-25	13.0		B-27	11.0
11/08/98	C-27	12.0	02/08/99	A-14	10.0	07/09/99	C-27	14.0
	A-29	7.5		B-14	15.0		B-22	6.7
	B-29	10.8		C-14	13.0		C-22	11.0
11/09/98	A-24	7.5	02/09/99	C-9	9.0	07/10/99	A-17	10.0
	B-24	11.7		A-11	11.7		B-17	6.7
	C-24	6.0		B-11	8.3		A-19	11.7
11/10/98	A-21	15.0	02/10/99	C-6	8.0	07/11/99	A-18	12.5
	B-21	7.5		A-8	10.8		B-18	5.8
	C-21	23.0		B-8	7.5		C-18	14.0
11/11/98	A-11	10.0	02/11/99	B-3	12.5	07/12/99	C-13	10.0
	B-11	8.3		C-3	8.0		A-15	12.5
	C-11	12.0		A-5	10.0		B-15	7.5
11/12/98	A-21	7.5	02/12/99	A-25	6.0	07/13/99	A-10	20.0
	B-21	7.5		B-25	2.0		B-10	8.3
	C-21	10.0		C-25	2.5		C-10	13.0

TABLE B-7. LTV, WARREN, OH (continued)

Date	Oven	Average Opacity	Date	Oven	Average Opacity	Date	Oven	Average Opacity
11/13/98	A-6	13.3	02/13/99	B-24	12.5	07/14/99	A-7	16.7
	B-6	10.8		C-24	9.0		B-7	6.7
	C-6	15.0		A-26	9.2		C-7	14.0
11/14/98	A-9	14.2	02/14/99	B-23	7.5	07/15/99	B-27	8.3
	B-9	10.0		C-23	14.0		A-29	16.7
	C-9	11.0		A-25	7.5		B-29	11.7
11/15/98	A-12	10.0	02/15/99	B-20	7.5	07/16/99	C-1	8.0
	B-12	15.8		C-20	13.0		A-3	11.7
	C-12	13.0		A-22	12.5		B-3	6.7
11/16/98	B-26	15.8	02/16/99	C-2	16.0	07/17/99	B-24	14.2
	C-26	17.0		A-4	11.7		C-24	20.0
	A-28	18.3		B-4	6.7		A-26	7.5
11/17/98	C-23	16.0	02/17/99	A-8	0.8	07/18/99	C-24	15.0
	A-25	11.7		B-8	7.0		A-26	6.7
	B-25	13.3		C-8	4.0		B-26	15.0
11/18/98	B-18	13.3	02/18/99	A-3	13.3	07/19/99	B-23	11.7
	C-17	13.0		B-3	6.7		C-23	8.0
	A-20	10.8		C-3	9.0		A-25	15.0
11/19/98	C-15	15.0	02/19/99	B-26	8.3	07/20/99	A-18	6.7
	A-17	13.3		C-26	7.0		B-18	6.0
	B-17	10.8		A-28	11.7		C-18	11.3
11/20/98	A-7	10.8	02/20/99	C-9	3.0	07/21/99	B-17	7.5
	B-7	7.5		A-11	2.5		C-17	15.0
	C-7	16.0		B-11	7.0		A-19	10.0
11/21/98	A-11	13.3	02/21/99	C-21	6.0	07/22/99	C-8	14.0
	B-11	7.5		A-23	6.7		A-10	6.7
	C-11	10.0		B-23	10.8		B-10	5.8
11/22/98	B-6	10.8	02/22/99	A-26	6.0	07/23/99	B-9	11.0
	C-6	14.0		B-26	4.0		B-3	4.0
	A-8	6.7		C-26	2.5		C-5	9.0
11/23/98	B-1	10.8	02/23/99	B-4	13.0	07/24/99	B-16	12.5
	C-1	17.0		C-4	17.0		C-16	9.0
	A-3	10.8		C-6	13.0		A-18	10.8
11/24/98	B-25	11.7	02/24/99	B-10	11.7	07/25/99	C-5	15.0
	C-25	9.0		C-10	9.0		A-7	7.5
	C-27	13.0		A-12	15.8		B-7	13.3
11/25/98	A-20	13.3	02/25/99	B-6	6.7	07/26/99	B-23	6.7
	B-20	7.5		C-6	10.0		C-23	14.0
	C-20	10.0		A-8	8.3		A-25	6.7
11/26/98	B-15	20.0	02/26/99	A-6	12.5	07/27/99	B-28	16.7
	C-15	7.5		B-6	8.3		A-1	7.5
	A-17	5.8		C-6	10.0		B-1	11.7
11/27/98	A-7	15.0	02/27/99	C-3	16.0	07/28/99	A-19	12.5

TABLE B-7. LTV, WARREN, OH (continued)

Date	Oven	Average Opacity	Date	Oven	Average Opacity	Date	Oven	Average Opacity
	B-7	10.0		A-5	9.2		B-19	7.5
	C-7	12.0		B-5	15.0		C-19	12.0
11/28/98	A-13	8.3	02/28/99	B-2	10.8	07/29/99	C-12	14.0
	B-13	10.8		C-2	16.0		A-14	10.0
	C-13	13.0		A-4	7.5		B-14	11.7
11/29/98	A-10	13.3	03/01/99	B-5	2.0	07/30/99	C-23	9.0
	B-10	7.5		C-5	2.0		A-25	15.0
	C-10	12.0		A-7	5.0		B-25	11.7
11/30/98	A-5	16.7	03/02/99	B-21	10.8	07/31/99	B-6	13.3
	B-5	12.5		C-21	9.0		C-6	15.0
	C-5	12.0		A-23	3.3		A-8	9.2
12/01/98	A-2	7.5	03/03/99	B-16	7.5	08/01/99	B-1	11.7
	B-2	11.7		C-16	15.0		C-1	9.0
	C-2	11.0		A-18	15.0		A-3	10.8
12/02/98	B-24	8.3	03/04/99	C-19	15.0	08/02/99	C-27	12.0
	C-24	13.0		A-21	0.8		A-29	7.5
	C-26	11.0		B-21	6.0		B-29	10.8
12/03/98	A-21	14.2	03/05/99	A-10	14.2	08/03/99	A-28	6.7
	B-21	9.2		B-10	9.2		B-28	10.0
	C-21	13.0		C-10	14.0		A-1	6.7
12/04/98	C-16	9.0	03/06/99	B-7	11.7	08/04/99	A-6	11.7
	A-18	17.5		C-7	5.0		B-6	15.0
	B-18	8.3		A-9	8.3		C-6	15.0
12/05/98	B-15	10.8	03/07/99	A-6	9.2	08/05/99	C-20	13.0
	C-17	15.0		B-6	10.0		C-24	16.0
	A-17	10.0		C-6	9.0		A-22	11.7
12/06/98	A-12	14.2	03/08/99	C-19	17.0	08/06/99	A-19	10.8
	B-12	9.2		A-21	12.5		B-19	5.0
	C-12	14.0		B-21	11.0		C-19	13.0
12/07/98	A-29	13.3	03/09/99	B-18	13.0	08/07/99	A-16	11.7
	B-29	10.0		C-18	19.0		B-16	6.7
	A-2	15.0		A-20	6.0		C-16	10.0
12/08/98	B-4	7.5	03/10/99	B-23	13.3	08/08/99	A-15	14.2
	C-4	16.0		C-23	10.0		B-15	5.8
	A-6	10.8		A-25	10.8		C-15	13.0
12/09/98	B-28	10.0	03/11/99	A-15	11.7	08/09/99	B-10	15.8
	A-1	10.0		B-15	6.7		C-10	8.0
	B-1	7.5		C-15	16.0		A-12	12.5
12/10/98	C-23	11.0	03/12/99	C-10	13.0	08/10/99	A-25	7.5
	A-25	15.8		A-12	6.7		B-25	15.8
	B-25	8.3		B-12	9.2		C-25	12.0
12/11/98	C-22	12.0	03/13/99	C-15	9.0	08/11/99	A-2	18.3
	A-24	15.0		A-17	15.0		B-25	9.2

TABLE B-7. LTV, WARREN, OH (continued)

Date	Oven	Average Opacity	Date	Oven	Average Opacity	Date	Oven	Average Opacity
	B-24	11.7		B-17	12.5		C-25	13.0
12/12/98	A-21	11.7	03/14/99	B-8	15.0	08/12/99	A-24	5.0
	B-21	9.2		C-8	9.0		B-24	11.0
	C-21	12.0		A-10	9.2		C-24	12.5
12/13/98	C-14	12.0	03/15/99	B-1	2.0	08/13/99	C-11	13.0
	A-16	7.5		C-1	3.0		B-19	12.5
	B-16	11.7		A-3	3.3		C-19	9.0
12/14/98	C-13	14.0	03/16/99	A-4	13.3	08/14/99	A-20	8.3
	A-15	6.7		B-4	10.8		B-20	10.8
	B-15	9.2		C-4	15.0		C-20	10.0
12/15/98	B-26	13.3	03/17/99	A-24	10.0	08/15/99	B-10	10.0
	C-26	9.0		B-24	15.0		C-10	9.0
	A-28	12.5		C-24	10.0		A-12	5.0
12/16/98	B-5	12.5	03/18/99	A-18	14.2	08/16/99	B-14	9.2
	C-5	6.0		B-18	10.8		C-14	10.0
	A-7	13.3		C-18	15.0		A-16	11.7
12/17/98	A-2	15.8	03/19/99	C-18	10.0	08/17/99	C-11	11.0
	B-2	10.0		A-20	13.3		A-13	7.5
	C-2	14.0		B-20	7.5		B-13	13.3
12/18/98	C-26	10.0	03/20/99	B-15	7.5	08/18/99	B-2	6.0
	A-28	12.5		C-15	6.0		C-2	17.0
	B-28	10.8		A-17	12.5		A-4	9.2
12/19/98	A-23	10.0	03/21/99	A-18	15.0	08/19/99	B-28	16.0
	B-23	12.5		B-18	8.3		C-24	8.0
	C-23	9.0		C-18	12.0		C-26	16.3
12/20/98	C-18	13.0	03/22/99	B-7	4.0	08/20/99	B-8	8.3
	A-20	15.8		C-7	3.0		C-8	16.0
	B-20	10.8		A-9	2.5		A-10	9.2
12/21/98	A-15	13.3	03/23/99	B-29	10.0	08/21/99	A-20	10.8
	B-15	10.8		A-4	7.5		B-20	5.8
	A-17	15.0		B-4	12.5		C-20	13.0
12/22/98	A-12	10.0	03/24/99	B-1	5.8	08/22/99	A-21	7.5
	B-12	7.5		C-1	10.0		B-21	15.8
	C-12	15.0		A-3	10.8		C-21	9.0
12/23/98	C-7	16.0	03/25/99	A-23	11.7	08/23/99	B-18	15.0
	A-9	10.8		B-23	9.2		C-18	15.0
	B-9	10.8		C-23	10.0		A-20	7.5
12/24/98	B-4	14.2	03/26/99	C-18	8.0	08/24/99	C-8	12.0
	C-4	12.0		A-20	14.2		A-10	17.5
	A-6	8.3		B-20	10.0		B-10	18.3
12/25/98	C-24	16.0	03/27/99	C-21	13.0	08/25/99	C-10	14.0
	A-26	15.8		A-23	12.5		B-12	15.0
	B-26	15.0		B-23	7.5		C-12	9.0

TABLE B-7. LTV, WARREN, OH (continued)

Date	Oven	Average Opacity	Date	Oven	Average Opacity	Date	Oven	Average Opacity
12/26/98	A-25	10.8	03/28/99	B-14	5.0	08/26/99	A-5	13.3
	B-25	15.8		C-14	2.5		B-5	19.2
	C-25	13.0		A-16	6.0		C-5	13.0
12/27/98	A-22	9.2	03/29/99	C-9	11.0	08/27/99	A-27	14.2
	B-22	8.3		A-11	5.8		B-27	7.5
	C-22	16.0		B-11	6.0		C-27	11.0
12/28/98	A-21	10.8	03/30/99	C-6	9.0	08/28/99	A-3	5.8
	B-21	15.8		A-8	13.3		B-3	10.8
	C-21	12.0		B-8	9.2		C-3	12.0
12/29/98	B-18	14.2	03/31/99	A-2	15.0	08/29/99	A-25	10.8
	C-18	12.0		B-2	9.2		B-25	10.8
	A-20	10.0		C-2	15.0		C-25	9.0
12/30/98	C-11	16.0	04/01/99	C-27	11.3	08/30/99	C-16	13.0
	A-13	7.5		A-29	5.0		A-18	8.3
	B-13	11.7		B-29	7.0		B-18	8.0
12/31/98	C-24	9.0	04/02/99	A-28	13.3	08/31/99	B-15	11.0
	A-26	15.8		B-28	12.5		C-15	8.0
	B-26	10.8		A-1	6.7		A-17	5.8
			04/03/99	C-23	12.0	09/01/99	A-16	15.8
				A-25	16.7		B-16	7.5
				B-25	9.2		C-16	13.0
			04/04/99	A-18	15.0	09/02/99	B-9	11.0
				B-18	7.5		C-9	12.0
				C-18	13.0		A-11	7.5
			04/05/99	C-13	15.0	09/03/99	C-8	12.0
				A-15	5.0		A-10	14.2
				B-15	5.0		B-10	10.8
			04/06/99	B-14	14.2	09/04/99	A-3	14.2
				C-14	9.0		B-3	9.2
				A-16	12.5		C-3	16.0
			04/07/99	C-2	17.0	09/05/99	A-29	8.3
				B-4	10.0		B-29	15.8
				C-4	15.0		A-2	11.7
			04/08/99	A-2	8.3	09/06/99	B-26	8.3
				B-2	5.0		C-26	14.0
				C-2	10.0		A-28	7.5
			04/09/99	C-7	13.0	09/07/99	C-21	8.8
				A-9	15.8		A-23	8.3
				B-9	7.5		B-23	9.0
			04/10/99	B-27	6.7	09/08/99	A-16	11.7
				C-27	12.0		B-16	8.3
				A-29	12.5		C-16	6.0
			04/11/99	C-24	11.0	09/09/99	B-13	14.2

TABLE B-7. LTV, WARREN, OH (continued)

Date	Oven	Average Opacity	Date	Oven	Average Opacity	Date	Oven	Average Opacity
				A-26	14.2		C-13	11.0
				B-26	7.5		B-15	5.8
			04/12/99	C-17	8.0	09/10/99	A-12	8.3
				A-19	10.0		B-12	6.7
				B-19	7.5		C-12	11.0
			04/13/99	B-14	10.0	09/11/99	B-9	10.0
				C-14	6.0		C-9	12.0
				B-16	12.5		A-11	14.2
			04/14/99	A-9	14.2	09/12/99	C-4	14.0
				B-9	8.3		A-6	14.2
				C-9	13.0		B-6	7.5
			04/15/99	C-24	12.0	09/13/99	A-1	8.3
				A-26	15.8		B-1	12.5
				B-26	13.3		C-1	13.0
			04/16/99	A-1	14.2	09/14/99	C-16	15.0
				B-1	11.7		A-18	14.2
				C-1	13.0		B-18	7.5
			04/17/99	C-27	13.0	09/15/99	B-18	12.5
				A-29	7.5		C-18	8.0
				B-29	13.3		A-20	10.8
			04/18/99	C-24	16.0	09/16/99	C-19	9.0
				A-26	7.5		A-21	10.8
				B-26	7.5		B-21	8.3
			04/19/99	A-19	9.2	09/17/99	C-16	17.0
				B-19	9.0		A-18	10.8
				C-19	12.5		B-18	7.5
			04/20/99	C-18	10.0	09/18/99	A-13	10.8
				A-20	15.0		B-13	5.8
				B-20	12.5		C-13	12.0
			04/21/99	C-23	16.0	09/19/99	B-10	15.0
				A-25	15.8		C-10	12.0
				B-25	10.0		A-12	11.7
			04/22/99	B-8	15.8	09/20/99	B-3	10.0
				C-8	16.0		C-3	15.0
				A-10	12.5		A-5	13.3
			04/23/99	B-7	10.0	09/21/99	C-25	13.0
				C-7	8.0		B-27	7.5
				A-9	11.7		C-27	9.0
			04/24/99	B-6	10.8	09/22/99	A-19	11.7
				C-6	9.0		B-19	5.8
				A-8	13.3		C-19	9.0
			04/25/99	A-7	10.0	09/23/99	B-19	7.5
				B-7	10.8		C-19	14.0

TABLE B-7. LTV, WARREN, OH (continued)

Date	Oven	Average Opacity	Date	Oven	Average Opacity	Date	Oven	Average Opacity
				C-7	12.0		A-21	11.7
			04/26/99	C-23	13.0	09/24/99	B-18	12.5
				A-25	14.2		C-18	14.0
				B-25	8.3		A-20	7.5
			04/27/99	B-20	10.8	09/25/99	C-13	7.0
				C-20	7.0		A-15	8.3
				A-22	11.7		B-15	15.0
			04/28/99	B-17	14.2	09/26/99	C-16	12.0
				C-17	8.0		A-18	15.8
				A-19	8.3		B-18	12.5
			04/29/99	A-18	10.8	09/27/99	B-15	19.0
				B-18	15.8		C-15	14.0
				C-18	14.0		A-17	16.0
			04/30/99	B-11	5.0	09/28/99	B-6	10.0
				C-11	9.0		A-8	14.2
				A-13	10.0		B-8	8.3
			05/01/99	A-12	13.3	09/29/99	A-28	12.5
				B-12	7.5		B-28	7.5
				C-12	12.0		A-1	7.5
			05/02/99	B-18	15.8	09/30/99	C-4	7.5
				A-17	13.3			
				B-17	8.3			
			05/03/99	A-2	4.2	10/01/99	A-22	11.7
				B-18	6.0		B-22	15.0
				B-2	10.0		C-22	15.0
			05/04/99	A-3	9.2	10/02/99	C-23	6.0
				B-3	14.2		A-25	15.8
				C-3	8.0		B-25	7.5
			05/05/99	B-21	15.8	10/03/99	C-18	12.5
				C-21	6.0		A-20	10.0
				A-23	11.7		B-20	13.0
			05/06/99	B-20	7.5	10/04/99	B-6	10.8
				C-20	14.0		C-6	13.0
				A-22	8.3		A-8	5.8
			05/07/99	B-15	6.7	10/05/99	C-4	6.0
				C-15	13.0		A-6	13.3
				A-17	9.2		B-6	9.2
			05/08/99	A-18	12.5	10/06/99	C-25	2.5
				B-18	5.8		A-27	4.0
				C-18	12.0		B-27	9.0
			05/09/99	A-11	5.8	10/07/99	C-25	16.0
				B-11	14.2		A-27	10.8
				C-11	8.0		B-27	12.5

TABLE B-7. LTV, WARREN, OH (continued)

Date	Oven	Average Opacity	Date	Oven	Average Opacity	Date	Oven	Average Opacity
			05/10/99	B-18	14.2	10/08/99	A-26	12.5
				C-18	12.0		B-26	11.7
				A-20	11.7		C-26	13.0
			05/11/99	C-9	27.0	10/09/99	B-2	11.7
				A-11	10.8		C-2	18.0
				B-11	7.0		A-4	12.5
			05/12/99	C-2	13.0	10/10/99	B-24	15.0
				A-4	15.8		C-24	20.0
				B-4	7.5		A-26	12.0
			05/13/99	B-26	8.3	10/11/99	A-19	8.3
				C-26	7.0		B-19	10.8
				A-28	4.2		C-19	9.0
			05/14/99	A-23	5.0	10/12/99	A-10	10.8
				B-23	6.7		B-10	15.0
				C-23	13.0		C-10	17.0
			05/15/99	B-20	12.5	10/13/99	A-7	14.2
				C-20	6.0		B-7	16.7
				A-22	8.3		C-7	14.0
			05/16/99	B-11	7.5	10/14/99	C-5	15.0
				C-11	6.0		A-4	7.5
				A-13	14.2		B-4	12.5
			05/27/99	B-29	12.0	10/15/99	A-28	14.2
				A-2	5.0		B-28	10.8
				B-2	6.0		A-1	10.0
			05/28/99	C-25	15.0	10/16/99	C-25	15.0
				A-27	18.3		A-27	15.0
				B-27	10.8		B-27	10.0
			05/29/99	B-5	14.2	10/17/99	A-26	16.0
				C-5	10.0		B-26	15.0
				A-7	6.7		C-26	13.8
			05/30/99	B-23	5.0	10/18/99	A-15	9.2
				C-23	9.0		B-15	10.0
				A-25	10.0		C-15	5.0
			05/31/99	B-28	10.0	10/19/99	A-14	13.0
				A-1	16.7		B-14	14.0
				B-1	10.8		C-14	17.5
						10/20/99	B-6	4.0
							C-6	9.0
							A-8	5.0
						10/21/99	C-26	8.8
							A-28	14.0
							B-28	8.0
						10/22/99	A-13	6.7

TABLE B-7. LTV, WARREN, OH (continued)

Date	Oven	Average Opacity	Date	Oven	Average Opacity	Date	Oven	Average Opacity
							B-13	5.0
							C-13	10.0
						10/23/99	B-2	10.0
							C-2	20.0
							A-4	10.0
						10/24/99	A-28	12.0
							B-28	2.0
							A-1	5.0
						10/25/99	C-4	11.3
							A-6	16.7
							B-6	10.0
						10/26/99	A-20	16.7
							B-20	18.0
							C-20	20.0
						10/27/99	C-23	10.0
							A-25	9.0
							B-25	6.0
						10/28/99	B-12	17.0
							C-12	14.0
							A-14	12.5
						10/29/99	C-13	21.0
							A-15	13.3
							B-15	13.0
						10/30/99	A-6	5.0
							B-6	7.0
							C-6	13.0
						10/31/99	B-23	11.0
							C-23	11.3
							A-25	6.0

TABLE B-8. LTV, CHICAGO

Date	Opacity	Date	Opacity	Date	Opacity	Date	Opacity
1/1/98	8.33	6/1/98	2.5	12/1/98	13.33	6/1/99	5
	9.17		5		13.33		18.83
	12.5		4.17		10		10
	17.5		5.83		13.33		12.5
1/3/98	11.67	6/2/98	5.83	12/2/98	5.83	6/2/99	8.33
	15		5.83		12.5		5.83
	13.33		6.67		12.5		5
	11.67		7.5		12.5		4.17
1/4/98	11.67	6/4/98	5	12/4/98	8.33	6/3/99	9.17
	12.5		6.67		9.17		10
	12.5		5		7.5		13.33
	15.83		9.17		5		11.67
1/5/98	11.67	6/5/98	5.83	12/7/98	5.83	6/4/99	16.67
	10		3.33		4.17		13.33
	11.67		7.5		9.17		12.5
	18.33		4.17		12.5		10.83
1/9/98	6.67	6/7/98	9.17	12/8/98	14.17	6/8/99	3.33
	8.33		10		7.5		5.83
	5		6.67		15.83		5
	5		7.5		10		18.33
1/10/98	10	6/9/98	15.83	12/9/98	13.33	6/9/99	7.5
	0.83		9.17		15.83		10.83
	1.75		7.5		10		6.67
	8.33		10		11.67		13.33
1/11/98	7.5	6/10/98	9.17	12/10/98	10	6/10/99	8.33
	10		5		7.5		9.17
	6.67		5.83		7.5		6.67
	8.33		10		6.67		9.17
1/12/98	15.83	6/11/98	10	12/11/98	20	6/11/99	5.83
	14.17		12.5		8.33		7.5
	15.83		9.17		8.33		10
	18.33		10.83		5.83		6.67
1/16/98	18.33	6/12/98	4.17	12/14/98	15.83	6/15/99	6.67
	14.17		3.33		11.67		5
	18.33		3.33		11.67		7.5
	13.33		2.5		14.17		8.33
1/17/98	7.5	6/16/98	7.5	12/15/98	10	6/16/99	5
	9.17		6.67		8.33		4.17
	9.17		16.67		11.67		6.67
	14.17		8.33		10		4.17
1/18/98	10.83	6/17/98	7.5	12/16/98	13.33	6/17/99	7.5
	15		11.67		11.67		6.67
	19.17		13.33		14.14		4.17
	10.83	6/18/98	5		15.83		5
1/19/98	10		5	12/17/98	18.33	6/18/99	9.17
	11.67		6.67		12.5		6.67
	19.17		5		7.5		18.33
	11.67	6/19/98	6.67		6.67		10.83

TABLE B-8. LTV, CHICAGO (continued)

Date	Opacity	Date	Opacity	Date	Opacity	Date	Opacity
1/23/98	16.67		5	12/18/98	9.17	6/22/99	6.67
	10		9.17		5		8.33
	10.83		6.67		6.67		13.33
	8.33	6/22/98	3.33		5		4.17
1/24/98	15		5.83	12/22/98	6.67	6/23/99	4.17
	17.5		4.17		8.33		3.33
	16.67		3.33		5.83		10
	37.5	6/23/98	5.83		7.17		13.33
1/25/98	17.5		5	12/23/98	13.33	6/24/99	6.67
	16.67		5		9.17		9.17
	15.83		4.17		11.67		6.67
	14.17	6/24/98	11.67		29.17		3.33
1/26/98	18.33		6.67	12/25/98	14.17	6/25/99	5
	10		4.17		8.33		3.33
	14.17		5		5		3.33
	11.67	6/26/98	5		14.17		6.67
1/30/98	15.83		5	12/29/98	5.83	6/29/99	10
	16.67		6.67		9.17		7.5
	13.33	6/30/98	7.5		6.67		5.83
	11.67		6.67		7.5		5
1/31/98	9.17		9.17	12/30/98	6.67	6/30/99	9.17
	8.33		7.5		3.33		11.67
	5.83	7/1/98	10	1/1/99	4.17		9.17
	8.33		7.5		5		13.33
2/1/98	16.67		5		5.83	07/01/99	8.33
	10		9.17		5		10
	9.17	7/2/98	5.83	1/5/99	5		11.67
	8.33		9.17		6.67		3.33
2/2/98	8.33		8.33		7.5	07/02/99	5
	7.5		3.33		8.33		3.33
	16.67	7/3/98	7.5	1/6/99	3.33		10
	18.33		9.17		5.83		8.33
2/6/98	11.67		5		5	07/06/99	5
	15.83		6.67		4.17		4.17
	13.33	7/6/98	6.67	1/7/99	5.83		6.67
	13.33		5		5.83		9.17
2/7/98	15		4.17		3.33	07/07/99	5.83
	20		5		5		3.33
	8.33	7/7/98	1.67	1/8/99	10.83		6.67
	10		6.67		4.17		5
2/8/98	24.17		3.33		3.33	07/08/99	6.67
	30		8.33		7.5		5
	18.33	7/8/98	13.3	1/11/99	17.5		5
	14.17		9.17		5		3.33
2/9/98	21.67		18.33		6.67	07/09/99	5
	13.33		11.67		9.17		5.83
	18.33	7/9/98	5.83	1/12/99	7.5		10

TABLE B-8. LTV, CHICAGO (continued)

Date	Opacity	Date	Opacity	Date	Opacity	Date	Opacity
	16.67		5		11.67		6.67
2/13/98	13.33		5		8.33	07/12/99	5
	11.67		5		10		5
	13.33	7/14/98	7.5	1/13/99	3.33		1.67
	17.5		9.17		4.17		2.5
2/14/98	13.33		10.83		4.17	07/13/99	10
	10.83		5		5		5
	29.17	7/15/98	3.33	1/14/99	18.33		3.33
	18.33		5.83		9.17		5
2/15/98	14.17		4.17		19.17	07/14/99	11.67
	13.33		7.5		7.5		13.33
	10	7/16/98	5	1/18/99	5.83		5
	11.67		5		5		3.33
2/16/98	9.17		6.67		5	07/15/99	1.67
	11.67		11.67		3.33		4.17
	10	7/17/98	7.5	1/19/99	5		3.33
	7.5		10		6.67		5
2/20/98	5.83		13.33		4.17	07/19/99	3.33
	6.67		9.17		5.83		1.67
	10	7/21/98	9.17	1/20/99	3.33		6.67
	9.17		7.5		4.17		5
2/21/98	8.33		8.33		6.67	07/20/99	3.33
	11.67		3.33		3.33		2.5
	12.5	7/22/98	11.67	1/21/99	5		7.5
	6.67		10		7.5		1.67
2/22/98	20		10.83		3.33	07/21/99	4.17
	13.33		8.33		5.83		8.33
	13.33	7/23/98	5	1/25/99	4.17		5.83
	20		2.5		5		3.33
2/23/98	11.67		0.1		5	07/22/99	7.5
	15.83		1.67		5.83		3.33
	10	7/24/98	7.5	1/26/99	5		5
	10.83		5.83		6.67		4.17
2/27/98	11.67		3.33		4.17	07/26/99	4.17
	13.33		4.17		4.17		3.33
	15	7/28/98	8.33	1/27/99	4.17		7.5
	13.33		15.83		3.33		1.67
2/28/98	11.67		12.5		4.17	07/27/99	3.33
	5.83		7.5		1.67		1.67
	10.83	7/29/98	4.17	1/28/99	4.17		5
	8.33		5		8.33		6.67
3/1/98	6.67		4.17		5	07/28/99	2.5
	5		12.5		5		7.5
	6.67	7/30/98	5	2/1/99	11.67		0
	6.67		5		5		1.67
3/5/98	10		8.33		9.17	07/29/99	6.67
	12.5		5		10.83		3.33

TABLE B-8. LTV, CHICAGO (continued)

Date	Opacity	Date	Opacity	Date	Opacity	Date	Opacity
	18.33	7/31/98	4.17	2/2/99	5.83		5
	10.83		5.83		5		7.5
3/6/98	16.67		3.33		2.5	07/30/99	5
	13.33		6.67		4.17		3.33
	15	8/4/98	13.33	2/3/99	4.17		3.33
	15		10		9.17		1.67
3/7/98	18.33		13.33		5	08/03/99	4.17
	15.83		11.67		8.33		2.5
	18.33	8/5/98	5	2/4/99	8.33		2.5
	29.17		7.5		8.33		3.33
3/8/98	15		10		5.83	08/04/99	3.33
	16.67		9.7		4.17		1.67
	16.67	8/6/98	7.5	2/8/99	3.33		2.5
	27.5		5.83		5.83		0.83
3/9/98	14.17		5		7.5	08/05/99	5.83
	11.67		3.33		5		3.33
	13.33	8/7/98	11.67	2/9/99	5		1.67
	15.83		10		6.67		9.17
3/14/98	18.33		6.67		3.33	08/06/99	6.67
	13.33		8.33		7.5		3.33
	15	8/11/98	3.33	2/10/99	7.17		3.33
	23.33		8.33		4.17		1.67
3/15/98	11.67		5		1.67	08/10/99	0.83
	10		9.17		1.67		1.67
	16.67	8/12/98	3.33	2/11/99	9.17		1.67
	15		5		6.67		5
3/16/98	15		3.33		5.83	08/11/99	3.33
	10		7.5		7.5		3.33
	10	8/13/98	6.67	2/15/99	6.67		5.83
	13.33		5		17.5		3.33
3/20/98	13.33		5		9.17	08/12/99	6.67
	11.67		3.33		5.83		5
	6.67	8/14/98	7.5	2/16/99	17.5		3.33
	10		8.33		18.33		6.67
3/21/98	11.67		6.67		8.33	08/13/99	5.83
	12.5		5		15		9.17
	15	8/18/98	13.33	2/17/99	1.67		7.5
	18.33		15.83		1.67		11.67
3/22/98	15		6.67		9.17	08/17/99	7.5
	8.33		7.5		5.83		8.33
	6.67	8/19/98	7.5	2/18/99	9.33		2.5
	6.67		11.67		9.33		1.67
3/23/98	11.67		10		2.5	08/18/99	11.67
	10		9.17		1.67		10.83
	13.33	8/20/98	9.17	2/22/99	4.17		4.17
	10		10.83		2.5		3.33
3/26/98	6.67		13.33		5.83	08/19/99	8.33

TABLE B-8. LTV, CHICAGO (continued)

Date	Opacity	Date	Opacity	Date	Opacity	Date	Opacity
	5		10		8.33		6.67
	5	8/21/98	3.33	2/23/99	1.67		7.5
	6.67		4.17		6.67		7.5
3/28/98	10		6.67		10.83	08/20/99	9.17
	3.33		4.17		15		5.83
	10	8/25/98	3.33	2/24/99	5		7.5
	3.33		5.83		6.67		6.67
3/29/98	9.17		5		10.83	08/23/99	5
	7.5		6.67		15		6.67
	7.5	8/26/98	15	2/25/99	7.5		5.83
	5		13.33		3.33		9.17
3/30/98	7.5		19.17		3.33	08/24/99	6.67
	6.67		13.33		9.17		3.33
	8.33	8/27/98	9.17	3/1/99	5		3.33
	7.5		7.5		7.5		5
3/31/98	13.33		9.17		5	08/25/99	6.67
	10.83		6.67		6.67		3.33
	5.83	8/28/98	5	3/2/99	6.67		5
	10.83		6.67		11.67		6.67
4/4/98	5.83		14.17		10	08/26/99	5
	8.33		5.83		5		3.33
	10	9/1/98	10	3/3/99	9.17		5
	7.5		6.67		5.83		6.67
4/5/98	8.33		5		3.33	08/27/99	5.83
	11.67		5.83		5		7.5
	14.17	9/2/98	9.17	3/4/99	9.17		8.33
	25		5		6.67		8.33
4/9/98	15.83		10		15	09/01/99	3.33
	10		7.5		18.33		7.5
	14.14	9/3/98	7.5	3/8/99	11.67		4.17
	18.33		5.83		13.33		5
4/10/98	9.17		10		7.5	09/02/99	3.33
	11.67		3.33		6.67		5.83
	14.17	9/4/98	6.67	3/9/99	5.83		10
	11.67		8.33		5		11.67
4/11/98	5		5		8.33	09/03/99	10
	25		7.5		10		9.17
	6.67	9/7/98	7.5	3/10/99	5		3.33
	8.33		10		13.33		5
4/12/98	11.67		9.17		12.5	09/06/99	9.17
	18.33		11.67		18.33		3.33
	15.83	9/8/98	5.83	3/11/99	7.5		5
	12.5		7.5		8.33		5
4/14/98	5		7.54		8.33	09/07/99	3.33
	6.67		8.33		10		5
	5.83	9/9/98	10.83	3/15/99	10.83		7.5
	5		7.5		7.5		8.33

TABLE B-8. LTV, CHICAGO (continued)

Date	Opacity	Date	Opacity	Date	Opacity	Date	Opacity
4/17/98	2.5		5		9.17	09/08/99	5.83
	10.83		10		11.67		11.67
	25	9/10/98	7.5	3/16/99	4.17		9.17
	7.5		6.67		4.17		5
4/18/98	7.5		9.17		5	09/09/99	10
	5		14.17		5		10
	4.17	9/11/98	7.5	3/17/99	5.83		9.17
	5		10		5.83		5.83
4/19/98	9.17		9.17		3.33	09/10/99	3.33
	7.5		13.33		3.33		1.67
	7.5	9/14/98	13.33	3/18/99	4.17		3.33
	9.17		12.05		5		5
4/23/98	6.67		14.17		3.33	09/13/99	13.33
	7.5		15		3.33		4.17
	9.17	9/15/98	5.83	3/22/99	6.67		4.17
	10		10		15		2.5
4/24/98	10.83		6.67		12.5	09/14/99	3.33
	5.83		5		11.67		31.67
	3.33	9/16/98	9.17	3/23/99	5		5
	4.17		7.5		10.83		8.33
4/25/98	15		11.67		17.5	09/15/99	13.33
	7.5		13.33		11.67		9.17
	8.33	9/17/98	10		7.5		10.83
	10		11.67		11.67		6.67
4/26/98	8.33		13.33		9.17	09/16/99	15.83
	7.5		8.33		13.33		13.33
	8.33	9/18/98	7.5	3/25/99	5		5
	7.5		9.17		3.33		5
4/30/98	7.5		5		6.67	09/21/99	15
	5.83		5		9.17		17.5
	5.83	9/22/98	6.67	3/30/99	9.17		18.33
	7.5		8.33		9.17		15
5/1/98	2.5		5.83		12.5	09/22/99	11.67
	4.17		11.67		11.67		15.83
	7.5	9/23/98	5	3/31/99	11.67		13.33
	5		3.33		8.33		9.17
5/2/98	11.67		5		9.17	09/23/99	5
	13.33		5.83		10		6.67
	9.17	9/24/98	14.17	1-Apr	2		3.33
	5		7.5		8.33		5
5/3/98	10		5.83		8.33	09/24/99	11.67
	7.5		11.67		7.5		10
	11.67	9/25/98	15	4/2/99	10.83		9.17
	13.33		14.17		7.5		16.67
5/7/98	7.5		5		6.67	09/27/99	10
	6.67		3.33		7.5		9.17
	5.83	9/29/98	5	5-Apr	25		10

TABLE B-8. LTV, CHICAGO (continued)

Date	Opacity	Date	Opacity	Date	Opacity	Date	Opacity
	7.5		6.67		18.33		11.67
5/8/98	7.5		7.5		15	09/28/99	6.67
	9.17		6.67		15		5.83
	13.33	9/30/98	5.83	4/6/99	6.67		9.17
	15.83		5.83		9.17		5
5/9/98	8.33		7.5		6.67	09/29/99	5.83
	10		4.17		5.83		4.17
	8.33	10/1/98	10.83	4/7/99	22.5		5.83
	13.33		8.33		14.17		6.67
5/10/98	9.17		8.33		9.17	09/30/99	5
	8.33		7.5		6.67		3.33
	7.5	10/2/98	6.67	4/8/99	4.17		2.5
	7.5		5		1.67		14.17
5/14/98	7.5		3.33		2.5	10/01/99	5
	1.67		5		3.33		3.33
	3.33	10/5/98	1.25	4/12/99	9.17		5
	5		3.33		7.5		10
5/15/98	9.17		1.25		4.17	10/04/99	5
	7.5		5.83		12.5		2.5
	10.83	10/6/98	3.33	4/13/99	9.17		3.33
	5		5		12.5		4.17
5/16/98	6.67		7.5		9.17	10/05/99	3.33
	16.67		9.17		3.33		7.5
	10.83	10/7/98	9.17	4/14/99	11.67		3.33
	11.67		4.17		14.17		5
5/17/98	4.17		5		15.83	10/06/99	5
	3.33		10.83		9.17		5.83
	4.17	10/8/98	10	4/15/99	8.33		7.5
	4.17		5.83		10		6.67
5/21/98	4.17		7.5		14.17	10/07/99	11.67
	5.83		9.17		8.33		6.67
	8.33	10/12/98	10	4/19/99	6.67		5.83
	10		10		7.5		9.17
5/22/98	9.17		6.67		5	10/12/99	5.83
	6.67		7.5		3.33		5
	10.83	10/13/98	4.17	4/20/99	3.33		10
	10.83		6.67		10		10
5/23/98	11.67		7.5		6.67	10/13/99	6.67
	5		7.5		7.5		14.17
	12.5	10/14/98	6.67	4/21/99	4.17		11.67
	12.5		15		5		11.67
5/24/98	4.17		11.67		12.5	10/14/99	15.83
	6.67		13.33		7.5		9.17
	10	10/15/98	15.83	4/22/99	10.83		3.33
	4.17		17.5		12.5		5
5/25/98	5.83		11.67		6.67	10/15/99	9.17
	5.83		11.67		10.83		3.33

TABLE B-8. LTV, CHICAGO (continued)

Date	Opacity	Date	Opacity	Date	Opacity	Date	Opacity
	5	10/20/98	14.17	4/25/99	6.67		10.83
	7.5		11.67		9.17		4.17
5/28/98	4.17		8.5		10	10/19/99	6.67
	8.33		9.17		7.5		9.17
	15.83	10/21/98	10	4/26/99	11.67		5
	11.67		11.67		10		7.5
5/30/98	4.7		13.33		6.67	10/20/99	15
	3.33		10.83		6.67		13.33
	2.5	10/22/98	4.17	4/27/99	21.67		15
	4.17		6.67		12.5		10
			14.17		10.83	10/21/99	4.17
			6.67		5		1.67
		10/27/98	7.5	4/28/99	8.33		2.5
			9.17		3.33		1.67
			6.67		3.33	10/22/99	1.67
			9.17		4.17		1.67
		10/28/98	10	5/4/99	9.17		3.33
			11.67		5.83		0
			14.17		7.5	10/25/99	3.33
			7.5		8.33		1.67
		10/29/98	11.67	5/5/99	6.67		1.67
			8.33		6.67		5
			10		11.67	10/26/99	2.5
			13.33		10		4.17
		10/30/98	10	5/6/99	5.83		3.33
			7.5		5		2.5
			9.17		5	10/27/99	9.17
		11/3/98	6.67		7.5		5
			3.33	5/7/99	5		4.17
			11.67		6.67		5
			5		9.17	10/28/99	3.33
		11/4/98	8.33		11.67		3.33
			5	5/10/99	8.33		5
			2.5		3.33		5.83
			5		7.5	10/29/99	6.67
		11/5/98	9.17		6.67		5
			10	5/12/99	11.67		3.33
			8.33		8.33		5
			5.83		11.67		
		11/6/98	18.33		9.17		
			14.17	5/13/99	14.17		
			13.33		11.67		
			10		13.33		
		11/10/98	6.67		17.5		
			9.17	5/14/99	3.33		
			11.67		1.67		
			14.17		2.5		

TABLE B-8. LTV, CHICAGO (continued)

Date	Opacity	Date	Opacity	Date	Opacity	Date	Opacity
		11/11/98	11.67		5.83		
			9.17	5/17/99	1.67		
			7.5		0.83		
			9.17		3.33		
		11/12/98	5		0.83		
			3.33	5/18/99	2.5		
			5		1.67		
			5		3.33		
		11/13/98	5		5		
			5	5/19/99	12.5		
			6.67		8.33		
			3.33		11.67		
		11/17/98	16.67		25		
			5	5/20/99	10		
			3.33		6.67		
			2.5		5.83		
		11/18/98	10		7.5		
			11.67	5/25/99	6.67		
			7.5		5		
			9.17		5		
		11/19/98	6.67		3.33		
			5	5/26/99	5		
			3.33		3.33		
			9.17		1.67		
		11/24/98	6.67		1.67		
			5	5/27/99	1.67		
			3.33		2.5		
			13.33		6.67		
		11/25/98	9.17		7.5		
			11.67	5/28/99	4.17		
			9.17		3.33		
			15.83		5		
		11/26/98	5		5		
			4.17				
			5.83				
			3.33				
		11/27/98	10.83				
			11.67				
			13.33				
			6.33				
		11/30/98	5				
			5				
			4.17				
			5				

APPENDIX C

COM DATA -- DAILY AVERAGES

C-1. USS CLAIRTON OPACITY -- DAILY AVERAGES

Battery 1		Battery 2		Battery 3		Battery 7		Battery 8		Battery 9	
Date	**Opacity**	**Date**	**Opacity**	**Date**	**Opacity**	**Date**	**Opacity**	**Date**	**Opacity**	**Date**	**Opacity**
8/1/98	3.28	8/1/98	1.56	8/1/98	2.0	8/1/98	2.4	8/1/98	1.1	8/1/98	4.0
8/2/98	2.68	8/2/98	2.05	8/2/98	0.9	8/2/98	1.9	8/2/98	1.7	8/2/98	4.8
8/3/98	2.71	8/3/98	2.12	8/3/98	1.8	8/3/98	2.8	8/3/98	3.5	8/3/98	2.4
8/4/98	1.97	8/4/98	2.23	8/4/98	1.4	8/4/98	1.9	8/4/98	0.7	8/4/98	4.5
8/11/98	0.73	8/11/98	0.49	8/11/98	2.0	8/11/98	1.7	8/11/98	0.4	8/11/98	0.7
8/12/98	0.85	8/12/98	1.71	8/12/98	3.5	8/12/98	2.5	8/12/98	0.8	8/12/98	1.5
8/13/98	1.74	8/13/98	3.99	8/13/98	3.2	8/13/98	5.0	8/13/98	0.2	8/13/98	1.1
8/14/98	2.13	8/14/98	2.35	8/14/98	3.5	8/14/98	3.8	8/14/98	0.7	8/14/98	1.1
8/15/98	2.34	8/15/98	3.80	8/15/98	2.4	8/15/98	4.2	8/15/98	1.4	8/15/98	1.4
8/16/98	3.65	8/16/98	1.33	8/16/98	2.0	8/16/98	4.1	8/16/98	0.8	8/16/98	1.3
8/17/98	3.41	8/17/98	2.26	8/17/98	2.7	8/17/98	2.9	8/17/98	0.3	8/17/98	1.3
8/18/98	2.12	8/18/98	1.58	8/18/98	4.9	8/18/98	3.2	8/18/98	0.8	8/18/98	1.6
8/19/98	1.66	8/19/98	4.25	8/19/98	4.0	8/19/98	4.2	8/19/98	0.7	8/19/98	1.5
8/20/98	0.75	8/20/98	1.61	8/20/98	6.2	8/20/98	4.1	8/20/98	1.0	8/20/98	3.0
8/21/98	1.18	8/21/98	2.56	8/21/98	3.3	8/21/98	3.2	8/21/98	0.8	8/21/98	2.7
8/22/98	0.65	8/22/98	1.56	8/22/98	2.7	8/22/98	3.3	8/22/98	1.1	8/22/98	2.7
8/23/98	1.15	8/23/98	1.83	8/23/98	2.5	8/23/98	4.2	8/23/98	3.2	8/23/98	2.5
8/24/98	1.89	8/24/98	1.43	8/24/98	2.9	8/24/98	3.0	8/24/98	2.2	8/24/98	1.4
8/25/98	1.71	8/25/98	2.38	8/25/98	2.9	8/25/98	3.2	8/25/98	0.8	8/25/98	1.4
8/26/98	2.03	8/26/98	0.73	8/26/98	2.7	8/26/98	3.0	8/26/98	0.9	8/26/98	1.2
8/27/98	1.87	8/27/98	1.55	8/27/98	2.7	8/27/98	3.4	8/27/98	0.6	8/27/98	2.9
8/28/98	1.93	8/28/98	2.78	8/28/98	6.7	8/28/98	3.6	8/28/98	0.9	8/28/98	3.6
8/29/98	1.40	8/29/98	2.22	8/29/98	4.1	8/29/98	4.3	8/29/98	1.3	8/29/98	1.4
8/30/98	1.25	8/30/98	3.08	8/30/98	2.8	8/30/98	3.8	8/30/98	0.8	8/30/98	1.7
8/31/98	0.80	8/31/98	4.12	8/31/98	4.3	8/31/98	4.3	8/31/98	0.8	8/31/98	2.2
9/1/98	0.83	9/1/98	6.20	9/1/98	4.7	9/1/98	5.0	9/1/98	1.0	9/1/98	1.7
9/2/98	0.38	9/2/98	3.62	9/2/98	3.2	9/2/98	6.2	9/2/98	1.0	9/2/98	1.9
9/3/98	1.54	9/3/98	2.23	9/3/98	3.3	9/3/98	5.8	9/3/98	0.7	9/3/98	5.2
9/4/98	0.90	9/4/98	2.64	9/4/98	2.7	9/4/98	6.4	9/4/98	2.1	9/4/98	1.5
9/5/98	0.84	9/5/98	1.45	9/5/98	2.4	9/5/98	7.1	9/5/98	1.3	9/5/98	1.7
9/6/98	1.49	9/6/98	2.40	9/6/98	2.2	9/6/98	6.8	9/6/98	0.7	9/6/98	1.4
9/7/98	2.79	9/7/98	2.20	9/7/98	2.9	9/7/98	7.1	9/7/98	1.8	9/7/98	1.3
9/8/98	1.14	9/8/98	2.77	9/8/98	2.9	9/8/98	7.1	9/8/98	2.2	9/8/98	2.1
9/9/98	2.70	9/9/98	2.28	9/9/98	3.1	9/9/98	6.9	9/9/98	1.9	9/9/98	1.8
9/10/98	2.56	9/10/98	2.40	9/10/98	3.2	9/10/98	7.9	9/10/98	4.8	9/10/98	1.4
9/11/98	1.73	9/11/98	2.41	9/11/98	2.9	9/11/98	7.5	9/11/98	5.8	9/11/98	1.6
9/12/98	0.93	9/12/98	2.53	9/12/98	2.4	9/12/98	6.9	9/12/98	4.0	9/12/98	0.9
9/13/98	0.78	9/13/98	2.10	9/13/98	2.3	9/13/98	7.1	9/13/98	8.7	9/13/98	1.3
9/14/98	0.74	9/14/98	1.53	9/14/98	2.6	9/14/98	6.9	9/14/98	6.2	9/14/98	0.9
9/15/98	1.30	9/15/98	1.82	9/15/98	3.0	9/15/98	8.5	9/15/98	8.8	9/15/98	1.7
9/16/98	0.68	9/16/98	2.69	9/16/98	3.1	9/16/98	9.3	9/16/98	7.2	9/16/98	2.2
9/17/98	0.64	9/17/98	2.47	9/17/98	4.5	9/17/98	7.9	9/17/98	5.3	9/17/98	1.9
9/18/98	1.81	9/18/98	3.50	9/18/98	4.4	9/18/98	8.1	9/18/98	9.1	9/18/98	1.5
9/19/98	1.09	9/19/98	3.96	9/19/98	3.5	9/19/98	5.2	9/19/98	3.7	9/19/98	1.1
9/20/98	0.67	9/20/98	2.59	9/20/98	3.8	9/20/98	3.7	9/20/98	2.5	9/20/98	0.9
9/21/98	1.25	9/21/98	2.64	9/21/98	4.3	9/21/98	4.3	9/21/98	5.5	9/21/98	0.9
9/22/98	2.70	9/22/98	3.86	9/22/98	4.5	9/22/98	4.6	9/22/98	6.4	9/22/98	1.4

C-1. USS CLAIRTON OPACITY -- DAILY AVERAGES (continued)

Battery 1		Battery 2		Battery 3		Battery 7		Battery 8		Battery 9	
Date	Opacity	Date	Opacity	Date	Opacity	Date	Opacity	Date	Opacity	Date	Opacity
9/23/98	2.84	9/23/98	5.05	9/23/98	5.2	9/23/98	6.3	9/23/98	4.9	9/23/98	1.8
9/24/98	1.67	9/24/98	4.24	9/24/98	4.4	9/24/98	6.3	9/24/98	4.5	9/24/98	2.7
9/25/98	1.45	9/25/98	3.39	9/25/98	3.7	9/25/98	5.4	9/25/98	5.9	9/25/98	1.8
9/26/98	1.17	9/26/98	3.11	9/26/98	3.4	9/26/98	5.9	9/26/98	14.6	9/26/98	1.6
9/27/98	0.74	9/27/98	2.68	9/27/98	2.7	9/27/98	4.8	9/27/98	4.9	9/27/98	1.5
9/28/98	1.50	9/28/98	4.28	9/28/98	4.0	9/28/98	4.8	9/28/98	1.3	9/28/98	2.0
9/29/98	1.69	9/29/98	3.95	9/29/98	4.0	9/29/98	5.5	9/29/98	1.6	9/29/98	2.6
9/30/98	1.53	9/30/98	4.05	9/30/98	5.1	9/30/98	5.5	9/30/98	1.6	9/30/98	1.6
10/1/98	1.98	10/1/98	5.21	10/1/98	4.6	10/1/98	4.6	10/1/98	0.8	10/1/98	2.3
10/2/98	2.98	10/2/98	4.50	10/2/98	4.2	10/2/98	5.7	10/2/98	3.1	10/2/98	3.7
10/3/98	3.71	10/3/98	3.81	10/3/98	4.8	10/3/98	3.4	10/3/98	2.3	10/3/98	3.4
10/4/98	4.64	10/4/98	3.53	10/4/98	4.3	10/4/98	2.5	10/4/98	2.0	10/4/98	3.5
10/5/98	4.12	10/5/98	3.48	10/5/98	6.0	10/5/98	4.1	10/5/98	3.4	10/5/98	5.6
10/6/98	3.72	10/6/98	3.30	10/6/98	4.8	10/6/98	3.5	10/6/98	3.1	10/6/98	4.9
10/7/98	2.95	10/7/98	5.18	10/7/98	4.8	10/7/98	4.0	10/7/98	4.4	10/7/98	5.2
10/8/98	3.74	10/8/98	4.63	10/8/98	4.9	10/8/98	3.1	10/8/98	5.4	10/8/98	6.4
10/9/98	4.52	10/9/98	5.05	10/9/98	5.2	10/9/98	4.4	10/9/98	5.6	10/9/98	4.3
10/10/98	5.97	10/10/98	4.95	10/10/98	4.7	10/10/98	4.8	10/10/98	8.3	10/10/98	5.1
10/11/98	6.45	10/11/98	4.88	10/11/98	4.3	10/11/98	6.0	10/11/98	8.8	10/11/98	5.1
10/12/98	5.82	10/12/98	5.78	10/12/98	5.6	10/12/98	5.2	10/12/98	6.4	10/12/98	5.7
10/13/98	5.61	10/13/98	5.05	10/13/98	5.6	10/13/98	6.4	10/13/98	12.8	10/13/98	4.9
10/14/98	5.77	10/14/98	8.32	10/14/98	4.7	10/14/98	5.3	10/14/98	5.7	10/14/98	4.7
10/15/98	6.53	10/15/98	4.61	10/15/98	4.4	10/15/98	3.7	10/15/98	5.0	10/15/98	3.9
10/16/98	3.90	10/16/98	3.89	10/16/98	4.1	10/16/98	2.2	10/16/98	6.3	10/16/98	5.9
10/17/98	1.25	10/17/98	2.33	10/17/98	3.8	10/17/98	2.6	10/17/98	8.5	10/17/98	7.3
10/18/98	1.06	10/18/98	2.16	10/18/98	4.8	10/18/98	2.7	10/18/98	5.6	10/18/98	7.8
10/19/98	1.11	10/19/98	3.72	10/19/98	4.6	10/19/98	3.7	10/19/98	6.1	10/19/98	6.9
10/20/98	2.83	10/20/98	3.75	10/20/98	5.4	10/20/98	4.2	10/20/98	8.3	10/20/98	5.8
10/21/98	2.37	10/21/98	5.45	10/21/98	6.2	10/21/98	5.0	10/21/98	5.6	10/21/98	7.1
10/22/98	5.73	10/22/98	5.45	10/22/98	5.0	10/22/98	5.8	10/22/98	4.0	10/22/98	6.2
10/23/98	6.49	10/23/98	5.51	10/23/98	6.5	10/23/98	5.6	10/23/98	6.6	10/23/98	5.2
10/24/98	4.24	10/24/98	6.30	10/24/98	8.7	10/24/98	6.2	10/24/98	7.7	10/24/98	7.6
10/25/98	7.11	10/25/98	5.20	10/25/98	7.3	10/25/98	7.1	10/25/98	7.8	10/25/98	6.8
10/26/98	9.39	10/26/98	6.98	10/26/98	6.7	10/26/98	7.0	10/26/98	5.5	10/26/98	9.8
10/27/98	9.25	10/27/98	4.39	10/27/98	6.0	10/27/98	5.4	10/27/98	7.7	10/27/98	8.0
10/28/98	8.55	10/28/98	5.25	10/28/98	6.6	10/28/98	5.9	10/28/98	5.5	10/28/98	10.8
10/29/98	6.90	10/29/98	5.52	10/29/98	7.8	10/29/98	7.2	10/29/98	7.0	10/29/98	9.5
10/30/98	1.06	10/30/98	4.94	10/30/98	5.8	10/30/98	9.5	10/30/98	4.7	10/30/98	8.7
10/31/98	2.73	10/31/98	4.74	10/31/98	7.3	10/31/98	6.9	10/31/98	6.0	10/31/98	10.6
11/1/98	3.18	11/1/98	5.28	11/1/98	7.2	11/1/98	6.3	11/1/98	6.6	11/1/98	8.8
11/2/98	4.47	11/2/98	6.31	11/2/98	10.9	11/2/98	6.8	11/2/98	4.9	11/2/98	8.2
11/3/98	5.25	11/3/98	6.15	11/3/98	8.5	11/3/98	4.5	11/3/98	6.5	11/3/98	10.1
11/4/98	6.59	11/4/98	7.24	11/4/98	7.2	11/4/98	5.4	11/4/98	4.7	11/4/98	6.8
11/5/98	8.30	11/5/98	7.20	11/5/98	7.4	11/5/98	5.4	11/5/98	4.7	11/5/98	2.9
11/6/98	6.60	11/6/98	5.48	11/6/98	6.8	11/6/98	6.4	11/6/98	7.1	11/6/98	3.2
11/7/98	8.10	11/7/98	5.42	11/7/98	6.7	11/7/98	5.2	11/7/98	5.8	11/7/98	2.2

C-1. USS CLAIRTON OPACITY -- DAILY AVERAGES (continued)

Battery 1		Battery 2		Battery 3		Battery 7		Battery 8		Battery 9	
Date	Opacity	Date	Opacity	Date	Opacity	Date	Opacity	Date	Opacity	Date	Opacity
11/8/98	13.68	11/8/98	7.42	11/8/98	9.7	11/8/98	5.9	11/8/98	4.9	11/8/98	1.0
11/9/98	11.10	11/9/98	10.06	11/9/98	10.3	11/9/98	5.3	11/9/98	4.2	11/9/98	2.0
11/10/98	8.79	11/10/98	12.63	11/10/98	9.2	11/10/98	7.1	11/10/98	6.0	11/10/98	4.3
11/11/98	5.79	11/11/98	9.43	11/11/98	11.0	11/11/98	5.6	11/11/98	6.2	11/11/98	5.6
11/12/98	10.27	11/12/98	6.54	11/12/98	13.4	11/12/98	6.7	11/12/98	5.4	11/12/98	9.2
11/13/98	18.70	11/13/98	8.40	11/13/98	12.8	11/13/98	7.1	11/13/98	4.9	11/13/98	11.3
11/14/98	16.31	11/14/98	13.43	11/14/98	15.8	11/14/98	7.6	11/14/98	5.2	11/14/98	7.2
11/15/98	17.76	11/15/98	10.06	11/15/98	15.5	11/15/98	7.8	11/15/98	5.5	11/15/98	7.5
11/16/98	16.80	11/16/98	15.91	11/16/98	16.4	11/16/98	8.1	11/16/98	5.3	11/16/98	14.2
11/17/98	3.14	11/17/98	9.91	11/17/98	10.8	11/17/98	7.3	11/17/98	5.1	11/17/98	12.3
11/18/98	6.30	11/18/98	7.37	11/18/98	12.6	11/18/98	7.7	11/18/98	6.2	11/18/98	8.7
11/19/98	15.14	11/19/98	11.75	11/19/98	14.2	11/19/98	9.3	11/19/98	9.6	11/19/98	8.1
11/20/98	9.70	11/20/98	10.33	11/20/98	11.4	11/20/98	6.0	11/20/98	6.6	11/20/98	7.9
11/21/98	15.41	11/21/98	8.35	11/21/98	8.3	11/21/98	6.5	11/21/98	6.4	11/21/98	10.0
11/22/98	18.81	11/22/98	11.51	11/22/98	6.6	11/22/98	7.0	11/22/98	6.5	11/22/98	8.9
11/23/98	14.84	11/23/98	16.04	11/23/98	13.8	11/23/98	8.1	11/23/98	6.5	11/23/98	10.7
11/24/98	9.51	11/24/98	9.96	11/24/98	11.3	11/24/98	8.5	11/24/98	6.0	11/24/98	10.4
11/25/98	15.22	11/25/98	13.11	11/25/98	10.6	11/25/98	7.4	11/25/98	7.0	11/25/98	10.9
11/26/98	7.87	11/26/98	12.18	11/26/98	12.2	11/26/98	8.6	11/26/98	9.4	11/26/98	6.6
11/27/98	16.08	11/27/98	11.25	11/27/98	10.8	11/27/98	6.2	11/27/98	4.2	11/27/98	1.9
11/28/98	20.80	11/28/98	13.70	11/28/98	11.7	11/28/98	2.4	11/28/98	2.7	11/28/98	2.1
11/29/98	18.80	11/29/98	14.11	11/29/98	16.4	11/29/98	2.6	11/29/98	4.7	11/29/98	3.9
11/30/98	14.31	11/30/98	9.42	11/30/98	15.2	11/30/98	3.1	11/30/98	2.9	11/30/98	5.5
12/1/98	8.90	12/1/98	5.31	12/1/98	7.7	12/1/98	3.2	12/1/98	2.4	12/1/98	3.7
12/2/98	9.83	12/2/98	5.60	12/2/98	19.7	12/2/98	2.8	12/2/98	2.8	12/2/98	6.3
12/3/98	9.20	12/3/98	6.65	12/3/98	14.4	12/3/98	3.4	12/3/98	4.1	12/3/98	5.5
12/4/98	11.90	12/4/98	3.82	12/4/98	9.9	12/4/98	3.1	12/4/98	4.4	12/4/98	8.4
12/5/98	10.64	12/5/98	4.65	12/5/98	9.5	12/5/98	3.5	12/5/98	4.3	12/5/98	6.6
12/6/98	10.74	12/6/98	4.58	12/6/98	6.5	12/6/98	4.2	12/6/98	9.8	12/6/98	6.5
12/7/98	7.95	12/7/98	2.48	12/7/98	6.5	12/7/98	4.1	12/7/98	5.4	12/7/98	5.1
12/8/98	9.12	12/8/98	2.80	12/8/98	7.5	12/8/98	4.2	12/8/98	4.0	12/8/98	4.4
12/9/98	8.90	12/9/98	4.11	12/9/98	6.0	12/9/98	2.2	12/9/98	1.5	12/9/98	5.7
12/10/98	11.66	12/10/98	7.54	12/10/98	9.5	12/10/98	4.1	12/10/98	4.0	12/10/98	5.1
12/11/98	15.38	12/11/98	3.08	12/11/98	8.9	12/11/98	3.2	12/11/98	1.9	12/11/98	4.7
12/12/98	19.43	12/12/98	5.56	12/12/98	7.8	12/12/98	4.9	12/12/98	3.1	12/12/98	5.3
12/13/98	21.13	12/13/98	4.79	12/13/98	10.8	12/13/98	4.2	12/13/98	4.3	12/13/98	5.8
12/14/98	14.06	12/14/98	4.37	12/14/98	11.9	12/14/98	3.8	12/14/98	3.7	12/14/98	4.7
12/15/98	5.55	12/15/98	6.41	12/15/98	7.0	12/15/98	4.2	12/15/98	3.9	12/15/98	5.0
12/16/98	6.51	12/16/98	6.85	12/16/98	10.8	12/16/98	5.4	12/16/98	3.8	12/16/98	6.4
12/17/98	7.71	12/17/98	6.07	12/17/98	10.4	12/17/98	4.4	12/17/98	3.7	12/17/98	5.5
12/18/98	8.06	12/18/98	6.80	12/18/98	8.4	12/18/98	4.2	12/18/98	2.8	12/18/98	5.3
12/19/98	6.37	12/19/98	11.10	12/19/98	13.4	12/19/98	6.9	12/19/98	3.4	12/19/98	5.6
12/20/98	5.88	12/20/98	5.88	12/20/98	10.7	12/20/98	4.4	12/20/98	3.2	12/20/98	5.4
12/21/98	8.54	12/21/98	7.86	12/21/98	11.0	12/21/98	6.2	12/21/98	4.5	12/21/98	8.0
12/22/98	5.21	12/22/98	4.31	12/22/98	8.8	12/22/98	7.2	12/22/98	4.2	12/22/98	5.6
12/23/98	8.16	12/23/98	5.11	12/23/98	7.7	12/23/98	7.7	12/23/98	3.9	12/23/98	1.2

C-1. USS CLAIRTON OPACITY -- DAILY AVERAGES (continued)

Battery 1		Battery 2		Battery 3		Battery 7		Battery 8		Battery 9	
Date	Opacity	Date	Opacity	Date	Opacity	Date	Opacity	Date	Opacity	Date	Opacity
12/24/98	7.84	12/24/98	5.38	12/24/98	7.6	12/24/98	4.8	12/24/98	4.8	12/24/98	1.2
12/25/98	7.58	12/25/98	6.18	12/25/98	11.1	12/25/98	4.8	12/25/98	4.7	12/25/98	1.3
12/26/98	7.43	12/26/98	7.26	12/26/98	12.1	12/26/98	6.3	12/26/98	4.0	12/26/98	1.8
12/27/98	5.80	12/27/98	10.27	12/27/98	10.0	12/27/98	6.6	12/27/98	4.0	12/27/98	1.2
12/28/98	9.06	12/28/98	8.90	12/28/98	14.4	12/28/98	7.9	12/28/98	6.1	12/28/98	1.4
12/29/98	9.19	12/29/98	8.55	12/29/98	10.0	12/29/98	8.3	12/29/98	5.0	12/29/98	1.3
12/30/98	6.09	12/30/98	9.71	12/30/98	9.4	12/30/98	8.0	12/30/98	6.1	12/30/98	2.6
12/31/98	9.59	12/31/98	11.65	12/31/98	9.3	12/31/98	8.8	12/31/98	4.7	12/31/98	1.5
1/1/99	4.63	1/1/99	11.04	1/1/99	8.2	1/1/99	9.5	1/1/99	5.2	1/1/99	2.0
1/2/99	6.07	1/2/99	15.96	1/2/99	11.5	1/2/99	7.6	1/2/99	5.6	1/2/99	1.4
1/3/99	7.06	1/3/99	15.21	1/3/99	12.7	1/3/99	6.1	1/3/99	4.9	1/3/99	1.1
1/4/99	4.40	1/4/99	9.43	1/4/99	8.4	1/4/99	6.3	1/4/99	5.9	1/4/99	2.0
1/5/99	4.17	1/5/99	4.20	1/5/99	5.0	1/5/99	6.2	1/5/99	5.9	1/5/99	2.6
1/6/99	7.09	1/6/99	6.19	1/6/99	10.7	1/6/99	7.4	1/6/99	6.3	1/6/99	2.4
1/7/99	6.55	1/7/99	5.43	1/7/99	11.6	1/7/99	4.2	1/7/99	5.2	1/7/99	1.9
1/8/99	8.31	1/8/99	9.13	1/8/99	17.1	1/8/99	1.8	1/8/99	2.3	1/8/99	2.6
1/9/99	8.48	1/9/99	9.51	1/9/99	13.9	1/9/99	1.2	1/9/99	2.3	1/9/99	2.2
1/10/99	9.08	1/10/99	6.50	1/10/99	15.7	1/10/99	1.3	1/10/99	2.3	1/10/99	3.2
1/11/99	10.28	1/11/99	11.00	1/11/99	12.7	1/11/99	1.9	1/11/99	3.3	1/11/99	3.2
1/12/99	7.66	1/12/99	16.11	1/12/99	18.1	1/12/99	2.4	1/12/99	2.1	1/12/99	3.1
1/13/99	6.23	1/13/99	7.94	1/13/99	13.1	1/13/99	2.2	1/13/99	2.1	1/13/99	3.2
1/14/99	4.58	1/14/99	8.65	1/14/99	8.8	1/14/99	2.0	1/14/99	1.8	1/14/99	3.5
1/15/99	3.60	1/15/99	6.59	1/15/99	8.5	1/15/99	1.6	1/15/99	2.2	1/15/99	3.8
1/16/99	7.49	1/16/99	10.03	1/16/99	14.8	1/16/99	3.0	1/16/99	3.1	1/16/99	5.5
1/17/99	4.89	1/17/99	8.96	1/17/99	8.9	1/17/99	2.4	1/17/99	2.5	1/17/99	4.7
1/18/99	7.46	1/18/99	8.01	1/18/99	13.3	1/18/99	3.6	1/18/99	8.8	1/18/99	6.6
1/19/99	9.87	1/19/99	7.28	1/19/99	17.9	1/19/99	3.2	1/19/99	6.6	1/19/99	6.7
1/20/99	11.47	1/20/99	13.98	1/20/99	13.2	1/20/99	2.8	1/20/99	4.7	1/20/99	5.7
1/21/99	6.47	1/21/99	10.05	1/21/99	16.1	1/21/99	5.0	1/21/99	5.6	1/21/99	7.9
1/22/99	7.62	1/22/99	8.35	1/22/99	15.0	1/22/99	4.3	1/22/99	4.6	1/22/99	8.3
1/23/99	7.18	1/23/99	15.41	1/23/99	10.3	1/23/99	6.8	1/23/99	4.7	1/23/99	4.6
1/24/99	6.16	1/24/99	13.27	1/24/99	8.4	1/24/99	7.2	1/24/99	2.1	1/24/99	2.9
1/25/99	10.04	1/25/99	5.80	1/25/99	8.1	1/25/99	7.3	1/25/99	2.4	1/25/99	4.1
1/26/99	6.91	1/26/99	5.85	1/26/99	6.2	1/26/99	8.0	1/26/99	1.4	1/26/99	4.2
1/27/99	8.07	1/27/99	8.75	1/27/99	6.5	1/27/99	5.8	1/27/99	2.2	1/27/99	1.9
1/28/99	9.03	1/28/99	6.65	1/28/99	10.5	1/28/99	3.7	1/28/99	3.1	1/28/99	4.3
1/29/99	5.10	1/29/99	4.58	1/29/99	8.4	1/29/99	5.3	1/29/99	4.8	1/29/99	4.1
1/30/99	6.92	1/30/99	7.42	1/30/99	17.3	1/30/99	4.3	1/30/99	4.3	1/30/99	3.7
1/31/99	11.82	1/31/99	10.78	1/31/99	16.3	1/31/99	2.8	1/31/99	5.8	1/31/99	4.5
2/1/99	13.30	2/1/99	11.50	2/1/99	15.2	2/1/99	2.4	2/1/99	7.9	2/1/99	4.3
2/2/99	6.68	2/2/99	5.05	2/2/99	12.2	2/2/99	2.5	2/2/99	7.5	2/2/99	4.0
2/3/99	2.27	2/3/99	4.86	2/3/99	8.2	2/3/99	1.1	2/3/99	4.8	2/3/99	3.8
2/4/99	2.01	2/4/99	3.28	2/4/99	6.4	2/4/99	1.8	2/4/99	7.9	2/4/99	4.4
2/5/99	2.14	2/5/99	3.43	2/5/99	4.3	2/5/99	1.3	2/5/99	9.2	2/5/99	3.3
2/6/99	2.76	2/6/99	4.85	2/6/99	6.5	2/6/99	1.6	2/6/99	7.1	2/6/99	4.3
2/7/99	5.30	2/7/99	4.70	2/7/99	9.2	2/7/99	2.2	2/7/99	7.1	2/7/99	5.2

C-1. USS CLAIRTON OPACITY -- DAILY AVERAGES (continued)

Battery 1		Battery 2		Battery 3		Battery 7		Battery 8		Battery 9	
Date	Opacity	Date	Opacity	Date	Opacity	Date	Opacity	Date	Opacity	Date	Opacity
2/8/99	6.78	2/8/99	5.46	2/8/99	6.0	2/8/99	1.3	2/8/99	7.8	2/8/99	4.6
2/9/99	3.98	2/9/99	8.94	2/9/99	9.4	2/9/99	1.1	2/9/99	6.7	2/9/99	4.6
2/10/99	5.24	2/10/99	7.34	2/10/99	8.9	2/10/99	1.0	2/10/99	7.8	2/10/99	5.9
2/11/99	9.34	2/11/99	10.88	2/11/99	12.0	2/11/99	2.4	2/11/99	6.6	2/11/99	6.9
2/12/99	3.65	2/12/99	6.77	2/12/99	7.8	2/12/99	3.8	2/12/99	6.3	2/12/99	6.8
2/13/99	6.25	2/13/99	2.26	2/13/99	8.3	2/13/99	4.0	2/13/99	6.0	2/13/99	5.8
2/14/99	9.62	2/14/99	5.53	2/14/99	6.9	2/14/99	4.9	2/14/99	5.2	2/14/99	5.3
2/15/99	5.34	2/15/99	10.65	2/15/99	11.6	2/15/99	4.3	2/15/99	6.7	2/15/99	5.9
2/16/99	8.69	2/16/99	14.08	2/16/99	14.0	2/16/99	4.1	2/16/99	6.2	2/16/99	7.4
2/17/99	6.86	2/17/99	12.53	2/17/99	6.4	2/17/99	5.2	2/17/99	6.3	2/17/99	8.8
2/18/99	5.85	2/18/99	6.38	2/18/99	9.3	2/18/99	2.5	2/18/99	2.9	2/18/99	8.6
2/19/99	10.35	2/19/99	7.13	2/19/99	9.1	2/19/99	1.1	2/19/99	3.4	2/19/99	7.0
2/20/99	7.53	2/20/99	7.62	2/20/99	6.8	2/20/99	1.5	2/20/99	2.2	2/20/99	7.3
2/21/99	7.33	2/21/99	6.87	2/21/99	9.3	2/21/99	1.1	2/21/99	2.3	2/21/99	7.4
2/22/99	9.50	2/22/99	10.14	2/22/99	10.1	2/22/99	1.1	2/22/99	3.7	2/22/99	4.4
2/23/99	10.41	2/23/99	9.08	2/23/99	8.4	2/23/99	1.6	2/23/99	2.3	2/23/99	1.1
2/24/99	8.65	2/24/99	8.75	2/24/99	12.0	2/24/99	2.2	2/24/99	2.9	2/24/99	2.0
2/25/99	8.81	2/25/99	10.82	2/25/99	10.0	2/25/99	3.1	2/25/99	3.9	2/25/99	2.1
2/26/99	10.91	2/26/99	12.37	2/26/99	13.7	2/26/99	2.7	2/26/99	3.5	2/26/99	3.2
2/27/99	10.30	2/27/99	10.76	2/27/99	12.1	2/27/99	2.9	2/27/99	3.3	2/27/99	3.0
2/28/99	11.19	2/28/99	11.68	2/28/99	10.2	2/28/99	2.9	2/28/99	4.0	2/28/99	4.5
3/1/99	7.72	3/1/99	11.21	3/1/99	9.8	3/1/99	3.1	3/1/99	2.5	3/1/99	10.3
3/2/99	9.08	3/2/99	9.67	3/2/99	12.9	3/2/99	2.0	3/2/99	3.6	3/2/99	1.3
3/3/99	11.48	3/3/99	11.48	3/3/99	9.3	3/3/99	2.6	3/3/99	4.0	3/3/99	1.0
3/4/99	8.21	3/4/99	9.66	3/4/99	8.7	3/4/99	2.0	3/4/99	3.2	3/4/99	1.5
3/5/99	10.01	3/5/99	9.46	3/5/99	11.0	3/5/99	2.3	3/5/99	2.6	3/5/99	1.5
3/6/99	9.98	3/6/99	16.32	3/6/99	9.3	3/6/99	2.5	3/6/99	3.1	3/6/99	1.8
3/7/99	7.78	3/7/99	11.08	3/7/99	10.0	3/7/99	2.2	3/7/99	3.9	3/7/99	1.3
3/8/99	14.49	3/8/99	11.39	3/8/99	12.9	3/8/99	2.5	3/8/99	4.0	3/8/99	1.9
3/9/99	16.88	3/9/99	20.21	3/9/99	12.6	3/9/99	2.5	3/9/99	5.0	3/9/99	1.7
3/10/99	11.64	3/10/99	18.95	3/10/99	12.2	3/10/99	2.6	3/10/99	3.5	3/10/99	2.0
3/11/99	12.11	3/11/99	14.53	3/11/99	13.4	3/11/99	2.7	3/11/99	5.3	3/11/99	4.7
3/12/99	12.00	3/12/99	15.25	3/12/99	16.0	3/12/99	3.1	3/12/99	3.8	3/12/99	1.8
3/13/99	11.18	3/13/99	11.75	3/13/99	15.1	3/13/99	3.3	3/13/99	4.7	3/13/99	2.2
3/14/99	10.29	3/14/99	6.79	3/14/99	11.5	3/14/99	4.0	3/14/99	4.8	3/14/99	3.8
3/15/99	7.95	3/15/99	8.37	3/15/99	10.4	3/15/99	4.4	3/15/99	4.8	3/15/99	3.1
3/16/99	6.91	3/16/99	4.78	3/16/99	0.0	3/16/99	3.9	3/16/99	4.8	3/16/99	2.7
3/17/99	13.24	3/17/99	8.12	3/17/99	0.0	3/17/99	4.2	3/17/99	8.1	3/17/99	4.2
3/18/99	8.12	3/18/99	14.62	3/18/99	0.0	3/18/99	4.7	3/18/99	5.8	3/18/99	4.8
3/19/99	8.98	3/19/99	11.45	3/19/99	0.0	3/19/99	5.6	3/19/99	5.5	3/19/99	3.5
3/20/99	10.00	3/20/99	9.44	3/20/99	0.0	3/20/99	6.5	3/20/99	5.5	3/20/99	2.9
3/21/99	9.42	3/21/99	9.73	3/21/99	0.0	3/21/99	6.8	3/21/99	6.1	3/21/99	4.2
3/22/99	5.54	3/22/99	7.83	3/22/99	0.0	3/22/99	7.5	3/22/99	6.1	3/22/99	3.7
3/23/99	7.88	3/23/99	10.25	3/23/99	0.0	3/23/99	8.4	3/23/99	7.2	3/23/99	3.4
3/24/99	5.73	3/24/99	11.97	3/24/99	0.0	3/24/99	9.5	3/24/99	6.8	3/24/99	4.4
3/25/99	10.13	3/25/99	12.65	3/25/99	0.0	3/25/99	9.8	3/25/99	7.6	3/25/99	5.1

C-1. USS CLAIRTON OPACITY -- DAILY AVERAGES (continued)

Battery 1		Battery 2		Battery 3		Battery 7		Battery 8		Battery 9	
Date	Opacity	Date	Opacity	Date	Opacity	Date	Opacity	Date	Opacity	Date	Opacity
3/26/99	13.98	3/26/99	16.22	3/26/99	0.0	3/26/99	10.4	3/26/99	7.2	3/26/99	4.2
3/27/99	10.62	3/27/99	16.06	3/27/99	0.0	3/27/99	9.7	3/27/99	7.4	3/27/99	4.4
3/28/99	23.65	3/28/99	14.02	3/28/99	0.0	3/28/99	10.4	3/28/99	7.9	3/28/99	4.8
3/29/99	14.61	3/29/99	14.70	3/29/99	0.0	3/29/99	10.4	3/29/99	7.0	3/29/99	4.7
3/30/99	9.07	3/30/99	19.02	3/30/99	0.0	3/30/99	11.4	3/30/99	7.0	3/30/99	5.1
3/31/99	11.58	3/31/99	14.88	3/31/99	0.0	3/31/99	12.1	3/31/99	10.3	3/31/99	4.6
4/1/99	10.97	4/1/99	12.40	4/1/99	0.0	4/1/99	11.7	4/1/99	12.1	4/1/99	7.9
4/2/99	10.40	4/2/99	10.14	4/2/99	0.0	4/2/99	10.1	4/2/99	13.8	4/2/99	6.0
4/3/99	7.25	4/3/99	15.56	4/3/99	0.0	4/3/99	7.5	4/3/99	6.9	4/3/99	1.7
4/4/99	7.65	4/4/99	9.23	4/4/99	0.3	4/4/99	5.6	4/4/99	5.6	4/4/99	2.0
4/5/99	6.08	4/5/99	9.53	4/5/99	0.0	4/5/99	4.0	4/5/99	3.5	4/5/99	0.8
4/6/99	7.90	4/6/99	17.00	4/6/99	0.0	4/6/99	2.7	4/6/99	5.1	4/6/99	2.9
4/7/99	7.67	4/7/99	13.90	4/7/99	0.0	4/7/99	1.8	4/7/99	4.0	4/7/99	1.5
4/8/99	7.71	4/8/99	4.91	4/8/99	0.0	4/8/99	2.8	4/8/99	6.2	4/8/99	3.2
4/9/99	6.95	4/9/99	5.55	4/9/99	0.0	4/9/99	2.7	4/9/99	4.0	4/9/99	1.9
4/10/99	4.25	4/10/99	4.69	4/10/99	0.0	4/10/99	2.6	4/10/99	2.1	4/10/99	1.7
4/11/99	5.33	4/11/99	5.07	4/11/99	0.0	4/11/99	5.7	4/11/99	5.7	4/11/99	3.4
4/12/99	4.56	4/12/99	5.24	4/12/99	0.0	4/12/99	5.9	4/12/99	3.7	4/12/99	2.3
4/13/99	6.28	4/13/99	5.15	4/13/99	0.0	4/13/99	6.1	4/13/99	3.7	4/13/99	2.6
4/14/99	5.75	4/14/99	3.68	4/14/99	0.0	4/14/99	6.0	4/14/99	4.1	4/14/99	2.3
4/15/99	5.61	4/15/99	5.03	4/15/99	0.0	4/15/99	6.3	4/15/99	5.7	4/15/99	2.8
4/16/99	6.99	4/16/99	6.36	4/16/99	0.0	4/16/99	7.6	4/16/99	5.3	4/16/99	3.3
4/17/99	6.44	4/17/99	3.64	4/17/99	0.0	4/17/99	6.3	4/17/99	3.2	4/17/99	3.3
4/18/99	8.78	4/18/99	6.56	4/18/99	0.0	4/18/99	7.4	4/18/99	5.2	4/18/99	4.9
4/19/99	5.15	4/19/99	6.11	4/19/99	0.0	4/19/99	7.4	4/19/99	4.2	4/19/99	3.8
4/20/99	8.14	4/20/99	4.90	4/20/99	0.0	4/20/99	6.5	4/20/99	4.9	4/20/99	6.0
4/21/99	11.44	4/21/99	5.40	4/21/99	0.0	4/21/99	7.1	4/21/99	6.7	4/21/99	7.8
4/22/99	7.06	4/22/99	6.13	4/22/99	0.0	4/22/99	8.4	4/22/99	6.8	4/22/99	10.5
4/23/99	9.75	4/23/99	5.14	4/23/99	0.0	4/23/99	7.6	4/23/99	7.9	4/23/99	9.0
4/24/99	8.55	4/24/99	5.00	4/24/99	0.0	4/24/99	4.7	4/24/99	10.1	4/24/99	8.1
4/25/99	8.03	4/25/99	7.87	4/25/99	0.0	4/25/99	4.8	4/25/99	11.2	4/25/99	8.6
4/26/99	13.23	4/26/99	9.38	4/26/99	0.0	4/26/99	5.2	4/26/99	15.0	4/26/99	8.1
4/27/99	18.65	4/27/99	7.68	4/27/99	0.0	4/27/99	3.5	4/27/99	9.5	4/27/99	5.9
4/28/99	9.55	4/28/99	5.86	4/28/99	0.0	4/28/99	2.2	4/28/99	3.4	4/28/99	2.1
4/29/99	11.42	4/29/99	5.36	4/29/99	0.0	4/29/99	2.4	4/29/99	4.5	4/29/99	2.2
4/30/99	12.84	4/30/99	6.75	4/30/99	0.0	4/30/99	2.8	4/30/99	2.9	4/30/99	2.4
5/1/99	10.30	5/1/99	6.18	5/1/99	0.0	5/1/99	1.6	5/1/99	1.9	5/1/99	1.8
5/2/99	10.18	5/2/99	7.61	5/2/99	0.0	5/2/99	1.6	5/2/99	2.0	5/2/99	2.1
5/3/99	14.83	5/3/99	7.33	5/3/99	0.0	5/3/99	2.4	5/3/99	2.6	5/3/99	1.9
5/4/99	9.85	5/4/99	7.05	5/4/99	0.0	5/4/99	2.5	5/4/99	5.6	5/4/99	3.3
5/5/99	10.79	5/5/99	8.15	5/5/99	0.0	5/5/99	2.4	5/5/99	2.6	5/5/99	1.4
5/6/99	12.90	5/6/99	5.59	5/6/99	0.0	5/6/99	1.4	5/6/99	4.5	5/6/99	2.6
5/7/99	8.40	5/7/99	2.33	5/7/99	15.5	5/7/99	1.3	5/7/99	2.9	5/7/99	2.7
5/8/99	9.28	5/8/99	3.56	5/8/99	8.2	5/8/99	3.4	5/8/99	1.2	5/8/99	1.8
5/9/99	12.79	5/9/99	3.83	5/9/99	12.1	5/9/99	2.0	5/9/99	1.6	5/9/99	2.9
5/10/99	10.35	5/10/99	3.40	5/10/99	14.0	5/10/99	2.7	5/10/99	1.4	5/10/99	2.0

C-1. USS CLAIRTON OPACITY -- DAILY AVERAGES (continued)

Battery 1		Battery 2		Battery 3		Battery 7		Battery 8		Battery 9	
Date	Opacity	Date	Opacity	Date	Opacity	Date	Opacity	Date	Opacity	Date	Opacity
5/11/99	10.33	5/11/99	4.42	5/11/99	13.8	5/11/99	2.1	5/11/99	0.7	5/11/99	3.2
5/12/99	10.47	5/12/99	4.41	5/12/99	16.3	5/12/99	1.9	5/12/99	1.0	5/12/99	2.9
5/13/99	8.66	5/13/99	2.43	5/13/99	11.0	5/13/99	1.5	5/13/99	0.9	5/13/99	2.4
5/14/99	7.68	5/14/99	3.18	5/14/99	7.2	5/14/99	1.8	5/14/99	1.0	5/14/99	3.1
5/15/99	4.08	5/15/99	3.83	5/15/99	12.4	5/15/99	2.7	5/15/99	1.0	5/15/99	2.8
5/16/99	8.63	5/16/99	2.56	5/16/99	10.5	5/16/99	2.2	5/16/99	1.1	5/16/99	4.9
5/17/99	8.74	5/17/99	3.08	5/17/99	11.9	5/17/99	2.4	5/17/99	1.1	5/17/99	4.0
5/18/99	6.83	5/18/99	3.98	5/18/99	16.2	5/18/99	2.1	5/18/99	1.7	5/18/99	4.8
5/19/99	10.52	5/19/99	1.87	5/19/99	12.1	5/19/99	1.7	5/19/99	1.2	5/19/99	4.1
5/20/99	7.95	5/20/99	3.12	5/20/99	9.2	5/20/99	2.7	5/20/99	1.8	5/20/99	7.0
5/21/99	9.21	5/21/99	2.59	5/21/99	13.6	5/21/99	21.6	5/21/99	8.2	5/21/99	14.1
5/22/99	9.90	5/22/99	3.02	5/22/99	13.2	5/22/99	2.4	5/22/99	1.4	5/22/99	7.5
5/23/99	11.29	5/23/99	3.32	5/23/99	11.6	5/23/99	2.5	5/23/99	1.3	5/23/99	5.3
5/24/99	7.07	5/24/99	3.19	5/24/99	12.6	5/24/99	4.3	5/24/99	3.9	5/24/99	6.2
5/25/99	9.74	5/25/99	9.03	5/25/99	14.5	5/25/99	3.9	5/25/99	2.7	5/25/99	6.8
5/26/99	10.17	5/26/99	4.62	5/26/99	12.6	5/26/99	3.6	5/26/99	2.4	5/26/99	6.1
5/27/99	9.66	5/27/99	4.63	5/27/99	12.2	5/27/99	4.1	5/27/99	2.0	5/27/99	4.5
5/28/99	11.11	5/28/99	4.63	5/28/99	15.9	5/28/99	4.4	5/28/99	2.4	5/28/99	1.7
5/29/99	10.76	5/29/99	4.15	5/29/99	13.9	5/29/99	4.2	5/29/99	3.1	5/29/99	2.4
5/30/99	12.03	5/30/99	6.65	5/30/99	14.4	5/30/99	4.3	5/30/99	4.4	5/30/99	1.9
5/31/99	12.63	5/31/99	6.59	5/31/99	16.0	5/31/99	3.5	5/31/99	4.8	5/31/99	2.3
6/1/99	11.98	6/1/99	6.85	6/1/99	12.7	6/1/99	4.2	6/1/99	3.4	6/1/99	1.2
6/2/99	15.91	6/2/99	6.12	6/2/99	15.0	6/2/99	5.1	6/2/99	3.7	6/2/99	1.5
6/3/99	12.87	6/3/99	6.34	6/3/99	12.2	6/3/99	4.2	6/3/99	3.4	6/3/99	1.4
6/4/99	8.84	6/4/99	6.47	6/4/99	11.1	6/4/99	4.7	6/4/99	3.8	6/4/99	1.5
6/5/99	11.98	6/5/99	5.60	6/5/99	15.2	6/5/99	6.2	6/5/99	3.8	6/5/99	3.1
6/6/99	13.60	6/6/99	7.33	6/6/99	12.6	6/6/99	4.8	6/6/99	3.3	6/6/99	2.0
6/7/99	14.28	6/7/99	7.08	6/7/99	17.6	6/7/99	4.7	6/7/99	4.1	6/7/99	2.5
6/8/99	14.21	6/8/99	7.58	6/8/99	14.7	6/8/99	5.0	6/8/99	5.6	6/8/99	3.7
6/9/99	13.91	6/9/99	7.52	6/9/99	10.3	6/9/99	5.1	6/9/99	4.5	6/9/99	3.3
6/10/99	10.81	6/10/99	5.40	6/10/99	12.3	6/10/99	5.2	6/10/99	5.3	6/10/99	3.0
6/11/99	14.12	6/11/99	4.64	6/11/99	13.2	6/11/99	4.5	6/11/99	5.3	6/11/99	3.6
6/12/99	15.10	6/12/99	5.08	6/12/99	11.2	6/12/99	4.3	6/12/99	5.1	6/12/99	3.6
6/13/99	10.78	6/13/99	6.56	6/13/99	15.8	6/13/99	5.4	6/13/99	3.4	6/13/99	5.0
6/14/99	12.68	6/14/99	4.30	6/14/99	15.9	6/14/99	4.4	6/14/99	4.7	6/14/99	4.6
6/15/99	15.56	6/15/99	8.04	6/15/99	11.3	6/15/99	4.9	6/15/99	4.1	6/15/99	5.5
6/16/99	11.79	6/16/99	7.00	6/16/99	13.2	6/16/99	5.5	6/16/99	3.6	6/16/99	5.5
6/17/99	15.58	6/17/99	5.97	6/17/99	12.8	6/17/99	5.4	6/17/99	4.3	6/17/99	5.7
6/18/99	13.90	6/18/99	7.95	6/18/99	11.0	6/18/99	5.5	6/18/99	4.0	6/18/99	5.5
6/19/99	14.40	6/19/99	8.13	6/19/99	13.0	6/19/99	6.3	6/19/99	4.7	6/19/99	5.1
6/20/99	14.80	6/20/99	6.82	6/20/99	13.8	6/20/99	8.0	6/20/99	4.4	6/20/99	5.1
6/21/99	14.52	6/21/99	8.88	6/21/99	17.0	6/21/99	4.3	6/21/99	3.8	6/21/99	5.8
6/22/99	12.65	6/22/99	8.43	6/22/99	6.0	6/22/99	3.2	6/22/99	2.6	6/22/99	0.7
6/23/99	15.10	6/23/99	6.23	6/23/99	10.1	6/23/99	2.7	6/23/99	2.7	6/23/99	1.1
6/24/99	15.35	6/24/99	7.55	6/24/99	7.0	6/24/99	2.5	6/24/99	3.9	6/24/99	1.3
6/25/99	14.17	6/25/99	7.71	6/25/99	9.0	6/25/99	5.0	6/25/99	4.0	6/25/99	2.9

C-1. USS CLAIRTON OPACITY -- DAILY AVERAGES (continued)

Battery 1		Battery 2		Battery 3		Battery 7		Battery 8		Battery 9	
Date	Opacity	Date	Opacity	Date	Opacity	Date	Opacity	Date	Opacity	Date	Opacity
6/26/99	14.28	6/26/99	6.60	6/26/99	11.3	6/26/99	5.3	6/26/99	7.1	6/26/99	2.5
6/27/99	17.26	6/27/99	8.58	6/27/99	6.9	6/27/99	2.9	6/27/99	1.9	6/27/99	2.2
6/28/99	16.27	6/28/99	8.77	6/28/99	11.9	6/28/99	2.4	6/28/99	3.0	6/28/99	4.5
6/29/99	13.89	6/29/99	7.60	6/29/99	10.9	6/29/99	1.9	6/29/99	4.8	6/29/99	1.5
6/30/99	10.79	6/30/99	5.24	6/30/99	7.1	6/30/99	2.2	6/30/99	2.4	6/30/99	1.3
7/1/99	9.73	7/1/99	3.12	7/1/99	10.3	7/1/99	1.7	7/1/99	1.3	7/1/99	1.4
7/2/99	6.64	7/2/99	3.50	7/2/99	9.2	7/2/99	1.1	7/2/99	1.4	7/2/99	1.4
7/3/99	7.19	7/3/99	3.63	7/3/99	7.8	7/3/99	2.3	7/3/99	2.3	7/3/99	1.1
7/4/99	6.58	7/4/99	2.01	7/4/99	8.5	7/4/99	2.2	7/4/99	3.6	7/4/99	1.8
7/5/99	6.53	7/5/99	4.17	7/5/99	12.1	7/5/99	1.9	7/5/99	3.3	7/5/99	1.2
7/6/99	6.87	7/6/99	2.11	7/6/99	8.7	7/6/99	3.7	7/6/99	2.7	7/6/99	2.4
7/7/99	6.29	7/7/99	3.83	7/7/99	8.7	7/7/99	2.8	7/7/99	2.5	7/7/99	1.7
7/8/99	10.00	7/8/99	5.94	7/8/99	11.3	7/8/99	3.2	7/8/99	2.4	7/8/99	3.5
7/9/99	11.39	7/9/99	5.75	7/9/99	12.4	7/9/99	2.0	7/9/99	2.3	7/9/99	2.4
7/10/99	13.05	7/10/99	4.09	7/10/99	10.2	7/10/99	1.0	7/10/99	2.4	7/10/99	2.1
7/11/99	10.45	7/11/99	4.29	7/11/99	9.3	7/11/99	1.0	7/11/99	2.6	7/11/99	2.3
7/12/99	8.79	7/12/99	4.40	7/12/99	9.1	7/12/99	1.5	7/12/99	3.2	7/12/99	2.8
7/13/99	9.75	7/13/99	4.13	7/13/99	9.6	7/13/99	2.5	7/13/99	3.1	7/13/99	3.7
7/14/99	11.88	7/14/99	5.03	7/14/99	12.6	7/14/99	2.7	7/14/99	3.6	7/14/99	3.6
7/15/99	9.71	7/15/99	5.66	7/15/99	10.6	7/15/99	2.7	7/15/99	3.7	7/15/99	4.0
7/16/99	11.58	7/16/99	5.75	7/16/99	12.9	7/16/99	3.2	7/16/99	3.8	7/16/99	3.9
7/17/99	10.85	7/17/99	4.84	7/17/99	11.9	7/17/99	4.2	7/17/99	2.9	7/17/99	3.5
7/18/99	13.11	7/18/99	5.23	7/18/99	12.4	7/18/99	3.7	7/18/99	3.3	7/18/99	3.6
7/19/99	11.06	7/19/99	3.70	7/19/99	13.0	7/19/99	3.3	7/19/99	4.5	7/19/99	3.7
7/20/99	9.57	7/20/99	4.47	7/20/99	10.1	7/20/99	9.8	7/20/99	4.0	7/20/99	3.3
7/21/99	7.58	7/21/99	4.89	7/21/99	10.0	7/21/99	3.5	7/21/99	3.6	7/21/99	3.1
7/22/99	11.20	7/22/99	4.08	7/22/99	11.9	7/22/99	2.9	7/22/99	5.7	7/22/99	3.4
7/23/99	8.38	7/23/99	3.68	7/23/99	9.7	7/23/99	2.9	7/23/99	5.6	7/23/99	4.1
7/24/99	7.96	7/24/99	4.53	7/24/99	12.0	7/24/99	2.6	7/24/99	4.5	7/24/99	4.0
7/25/99	12.70	7/25/99	5.11	7/25/99	12.3	7/25/99	3.0	7/25/99	4.5	7/25/99	4.5
7/26/99	11.83	7/26/99	5.74	7/26/99	7.4	7/26/99	2.6	7/26/99	3.8	7/26/99	3.8
7/27/99	8.99	7/27/99	4.52	7/27/99	13.9	7/27/99	3.0	7/27/99	4.4	7/27/99	5.4
7/28/99	16.30	7/28/99	5.79	7/28/99	12.3	7/28/99	5.9	7/28/99	5.6	7/28/99	7.0
7/29/99	14.41	7/29/99	5.40	7/29/99	12.6	7/29/99	5.9	7/29/99	7.0	7/29/99	8.0
7/30/99	3.81	7/30/99	3.18	7/30/99	8.8	7/30/99	4.2	7/30/99	6.2	7/30/99	8.5
7/31/99	7.62	7/31/99	3.53	7/31/99	11.0	7/31/99	4.5	7/31/99	8.0	7/31/99	5.5
8/1/99	7.48	8/1/99	4.96	8/1/99	6.8	8/1/99	4.3	8/1/99	7.0	8/1/99	5.3
8/2/99	7.55	8/2/99	5.88	8/2/99	12.4	8/2/99	4.2	8/2/99	6.6	8/2/99	6.1
8/3/99	8.34	8/3/99	3.85	8/3/99	13.3	8/3/99	2.8	8/3/99	4.7	8/3/99	5.5
8/4/99	6.29	8/4/99	5.10	8/4/99	9.5	8/4/99	0.9	8/4/99	2.5	8/4/99	3.6
8/5/99	7.13	8/5/99	4.98	8/5/99	12.3	8/5/99	2.2	8/5/99	3.4	8/5/99	3.2
8/6/99	8.54	8/6/99	3.25	8/6/99	8.9	8/6/99	3.1	8/6/99	4.4	8/6/99	4.6
8/7/99	5.78	8/7/99	2.78	8/7/99	4.6	8/7/99	2.8	8/7/99	5.6	8/7/99	5.5
8/8/99	8.54	8/8/99	2.38	8/8/99	5.2	8/8/99	5.1	8/8/99	6.8	8/8/99	6.6
8/9/99	5.52	8/9/99	2.89	8/9/99	7.5	8/9/99	3.8	8/9/99	5.1	8/9/99	2.8
8/10/99	3.25	8/10/99	2.53	8/10/99	5.1	8/10/99	0.7	8/10/99	4.0	8/10/99	2.3

C-1. USS CLAIRTON OPACITY -- DAILY AVERAGES (continued)

Battery 1		Battery 2		Battery 3		Battery 7		Battery 8		Battery 9	
Date	Opacity	Date	Opacity	Date	Opacity	Date	Opacity	Date	Opacity	Date	Opacity
8/11/99	4.52	8/11/99	2.86	8/11/99	8.7	8/11/99	3.8	8/11/99	6.6	8/11/99	3.1
8/12/99	5.30	8/12/99	3.87	8/12/99	7.3	8/12/99	4.2	8/12/99	2.4	8/12/99	2.8
8/13/99	4.74	8/13/99	3.85	8/13/99	7.9	8/13/99	2.6	8/13/99	2.3	8/13/99	4.6
8/14/99	5.17	8/14/99	3.63	8/14/99	8.7	8/14/99	2.0	8/14/99	3.1	8/14/99	5.3
8/15/99	5.01	8/15/99	5.01	8/15/99	8.3	8/15/99	1.5	8/15/99	3.1	8/15/99	4.0
8/16/99	5.18	8/16/99	6.35	8/16/99	10.5	8/16/99	1.5	8/16/99	2.4	8/16/99	3.1
8/17/99	4.97	8/17/99	3.90	8/17/99	11.1	8/17/99	1.2	8/17/99	1.4	8/17/99	3.5
8/18/99	4.28	8/18/99	3.21	8/18/99	5.5	8/18/99	2.1	8/18/99	2.1	8/18/99	4.2
8/19/99	4.46	8/19/99	5.20	8/19/99	7.5	8/19/99	3.1	8/19/99	3.0	8/19/99	1.9
8/20/99	4.80	8/20/99	5.19	8/20/99	8.7	8/20/99	2.0	8/20/99	1.9	8/20/99	3.1
8/21/99	3.77	8/21/99	5.63	8/21/99	5.3	8/21/99	1.7	8/21/99	1.9	8/21/99	4.4
8/22/99	4.13	8/22/99	6.57	8/22/99	7.6	8/22/99	1.8	8/22/99	2.5	8/22/99	4.1
8/23/99	5.80	8/23/99	4.26	8/23/99	10.7	8/23/99	1.4	8/23/99	2.6	8/23/99	3.9
8/24/99	6.84	8/24/99	5.63	8/24/99	7.5	8/24/99	2.7	8/24/99	2.5	8/24/99	4.0
8/25/99	3.58	8/25/99	5.46	8/25/99	13.2	8/25/99	1.3	8/25/99	2.2	8/25/99	3.3
8/26/99	6.15	8/26/99	4.29	8/26/99	9.4	8/26/99	2.5	8/26/99	2.8	8/26/99	2.1
8/27/99	5.81	8/27/99	6.20	8/27/99	7.2	8/27/99	1.2	8/27/99	2.7	8/27/99	1.9
8/28/99	4.74	8/28/99	5.03	8/28/99	9.1	8/28/99	1.9	8/28/99	2.4	8/28/99	1.0
8/29/99	6.77	8/29/99	4.36	8/29/99	7.1	8/29/99	3.5	8/29/99	3.0	8/29/99	2.4
8/30/99	7.11	8/30/99	7.08	8/30/99	8.1	8/30/99	3.8	8/30/99	4.2	8/30/99	2.8
8/31/99	3.75	8/31/99	3.65	8/31/99	9.9	8/31/99	5.8	8/31/99	3.8	8/31/99	3.1
9/1/99	5.35	9/1/99	4.44	9/1/99	8.2	9/1/99	4.6	9/1/99	3.8	9/1/99	4.1
9/2/99	3.75	9/2/99	4.05	9/2/99	8.6	9/2/99	4.9	9/2/99	2.8	9/2/99	4.5
9/3/99	3.93	9/3/99	3.73	9/3/99	10.4	9/3/99	8.8	9/3/99	1.5	9/3/99	4.6
9/4/99	5.15	9/4/99	3.82	9/4/99	6.8	9/4/99	9.8	9/4/99	1.9	9/4/99	4.8
9/5/99	4.01	9/5/99	4.18	9/5/99	8.4	9/5/99	7.6	9/5/99	1.5	9/5/99	3.7
9/6/99	5.94	9/6/99	3.25	9/6/99	7.9	9/6/99	5.6	9/6/99	1.4	9/6/99	3.3
9/7/99	7.26	9/7/99	4.86	9/7/99	7.8	9/7/99	4.6	9/7/99	1.5	9/7/99	3.3
9/8/99	4.53	9/8/99	5.93	9/8/99	8.8	9/8/99	3.5	9/8/99	1.5	9/8/99	3.7
9/9/99	4.62	9/9/99	3.83	9/9/99	13.0	9/9/99	4.0	9/9/99	4.2	9/9/99	2.5
9/10/99	6.61	9/10/99	6.76	9/10/99	6.5	9/10/99	3.2	9/10/99	1.6	9/10/99	1.0
9/11/99	3.99	9/11/99	6.66	9/11/99	9.6	9/11/99	4.6	9/11/99	0.8	9/11/99	1.3
9/12/99	5.44	9/12/99	4.25	9/12/99	10.2	9/12/99	4.2	9/12/99	2.7	9/12/99	1.4
9/13/99	5.53	9/13/99	5.13	9/13/99	6.6	9/13/99	3.0	9/13/99	1.6	9/13/99	1.6
9/14/99	3.18	9/14/99	6.64	9/14/99	15.7	9/14/99	2.9	9/14/99	1.2	9/14/99	1.9
9/15/99	6.83	9/15/99	5.46	9/15/99	10.9	9/15/99	2.9	9/15/99	2.8	9/15/99	1.6
9/16/99	5.20	9/16/99	6.81	9/16/99	7.4	9/16/99	4.2	9/16/99	3.3	9/16/99	3.2
9/17/99	5.58	9/17/99	7.20	9/17/99	9.7	9/17/99	3.3	9/17/99	3.0	9/17/99	3.2
9/18/99	8.40	9/18/99	6.69	9/18/99	11.1	9/18/99	4.8	9/18/99	3.5	9/18/99	3.5
9/19/99	6.28	9/19/99	6.48	9/19/99	7.0	9/19/99	3.8	9/19/99	2.8	9/19/99	2.9
9/20/99	6.31	9/20/99	6.34	9/20/99	10.4	9/20/99	2.9	9/20/99	3.1	9/20/99	2.3
9/21/99	5.95	9/21/99	3.08	9/21/99	9.0	9/21/99	3.5	9/21/99	4.9	9/21/99	2.7
9/22/99	3.05	9/22/99	5.17	9/22/99	5.9	9/22/99	2.7	9/22/99	5.0	9/22/99	3.3
9/23/99	2.12	9/23/99	10.28	9/23/99	13.8	9/23/99	3.0	9/23/99	6.9	9/23/99	2.1
9/24/99	3.67	9/24/99	7.04	9/24/99	12.1	9/24/99	4.1	9/24/99	4.6	9/24/99	1.7
9/25/99	5.68	9/25/99	6.01	9/25/99	14.7	9/25/99	2.8	9/25/99	2.1	9/25/99	2.0

C-1. USS CLAIRTON OPACITY -- DAILY AVERAGES (continued)

Battery 1		Battery 2		Battery 3		Battery 7		Battery 8		Battery 9	
Date	Opacity	Date	Opacity	Date	Opacity	Date	Opacity	Date	Opacity	Date	Opacity
9/26/99	6.45	9/26/99	8.24	9/26/99	9.4	9/26/99	0.9	9/26/99	2.6	9/26/99	1.4
9/27/99	5.43	9/27/99	6.97	9/27/99	9.4	9/27/99	0.5	9/27/99	1.5	9/27/99	1.0
9/28/99	5.57	9/28/99	7.05	9/28/99	10.6	9/28/99	1.1	9/28/99	2.1	9/28/99	2.1
9/29/99	5.38	9/29/99	5.79	9/29/99	13.8	9/29/99	1.1	9/29/99	3.9	9/29/99	2.4
9/30/99	5.23	9/30/99	8.94	9/30/99	7.9	9/30/99	1.1	9/30/99	3.9	9/30/99	2.8
10/1/99	4.13	10/1/99	7.07	10/1/99	7.2	10/1/99	1.4	10/1/99	2.7	10/1/99	4.1
10/2/99	3.76	10/2/99	5.80	10/2/99	9.5	10/2/99	1.5	10/2/99	3.0	10/2/99	4.6
10/3/99	5.95	10/3/99	5.12	10/3/99	9.1	10/3/99	1.2	10/3/99	2.5	10/3/99	6.3
10/4/99	3.91	10/4/99	4.75	10/4/99	9.6	10/4/99	0.7	10/4/99	4.2	10/4/99	5.6
10/5/99	4.03	10/5/99	4.95	10/5/99	13.8	10/5/99	2.7	10/5/99	5.6	10/5/99	4.9
10/6/99	6.37	10/6/99	8.55	10/6/99	10.7	10/6/99	3.7	10/6/99	3.7	10/6/99	3.5
10/7/99	3.73	10/7/99	5.54	10/7/99	11.6	10/7/99	3.7	10/7/99	2.8	10/7/99	1.5
10/8/99	4.35	10/8/99	4.93	10/8/99	13.2	10/8/99	5.3	10/8/99	5.3	10/8/99	3.6
10/9/99	3.62	10/9/99	5.89	10/9/99	8.5	10/9/99	5.1	10/9/99	3.8	10/9/99	2.5
10/10/99	2.11	10/10/99	4.78	10/10/99	10.9	10/10/99	4.9	10/10/99	2.5	10/10/99	3.3
10/11/99	3.54	10/11/99	3.49	10/11/99	9.4	10/11/99	3.2	10/11/99	3.1	10/11/99	3.9
10/12/99	4.22	10/12/99	4.74	10/12/99	8.2	10/12/99	2.9	10/12/99	2.9	10/12/99	11.9
10/13/99	7.46	10/13/99	8.04	10/13/99	11.3	10/13/99	2.6	10/13/99	3.6	10/13/99	4.0
10/14/99	3.70	10/14/99	7.03	10/14/99	9.0	10/14/99	2.8	10/14/99	2.1	10/14/99	3.1
10/15/99	5.30	10/15/99	5.27	10/15/99	11.1	10/15/99	2.5	10/15/99	2.9	10/15/99	2.9
10/16/99	2.71	10/16/99	3.35	10/16/99	5.6	10/16/99	2.0	10/16/99	4.0	10/16/99	2.9
10/17/99	1.35	10/17/99	5.16	10/17/99	7.6	10/17/99	2.9	10/17/99	2.0	10/17/99	2.9
10/18/99	3.63	10/18/99	0.91	10/18/99	7.8	10/18/99	2.5	10/18/99	1.6	10/18/99	1.6
10/19/99	4.15	10/19/99	2.76	10/19/99	9.8	10/19/99	2.2	10/19/99	3.7	10/19/99	3.9
10/20/99	2.21	10/20/99	4.93	10/20/99	7.8	10/20/99	1.8	10/20/99	1.8	10/20/99	2.8
10/21/99	2.37	10/21/99	1.96	10/21/99	8.6	10/21/99	2.2	10/21/99	3.7	10/21/99	2.9
10/22/99	2.71	10/22/99	2.77	10/22/99	8.6	10/22/99	3.0	10/22/99	3.8	10/22/99	3.4
10/23/99	2.75	10/23/99	5.08	10/23/99	7.0	10/23/99	2.5	10/23/99	2.7	10/23/99	3.0
10/24/99	2.37	10/24/99	4.01	10/24/99	8.9	10/24/99	2.3	10/24/99	2.6	10/24/99	2.8
10/25/99	3.27	10/25/99	4.60	10/25/99	9.4	10/25/99	2.3	10/25/99	3.4	10/25/99	3.9
10/26/99	2.45	10/26/99	5.68	10/26/99	10.1	10/26/99	2.3	10/26/99	3.1	10/26/99	4.2
10/27/99	4.37	10/27/99	3.99	10/27/99	12.9	10/27/99	1.8	10/27/99	2.3	10/27/99	3.0
10/28/99	5.02	10/28/99	7.31	10/28/99	7.5	10/28/99	2.0	10/28/99	4.0	10/28/99	3.1
10/29/99	1.93	10/29/99	4.97	10/29/99	9.2	10/29/99	2.9	10/29/99	6.3	10/29/99	3.2
10/30/99	4.29	10/30/99	3.63	10/30/99	8.4	10/30/99	1.5	10/30/99	2.6	10/30/99	1.1
10/31/99	5.03	10/31/99	5.02	10/31/99	6.8	10/31/99	1.8	10/31/99	4.8	10/31/99	2.7
11/1/99	3.49	11/1/99	9.15	11/1/99	9.3	11/1/99	3.1	11/1/99	4.2	11/1/99	2.1
11/2/99	8.20	11/2/99	4.53	11/2/99	9.8	11/2/99	2.7	11/2/99	3.3	11/2/99	1.9
11/3/99	7.19	11/3/99	7.99	11/3/99	6.5	11/3/99	3.0	11/3/99	2.5	11/3/99	1.8
11/4/99	3.33	11/4/99	7.57	11/4/99	6.9	11/4/99	3.0	11/4/99	2.9	11/4/99	2.7
11/5/99	4.70	11/5/99	5.48	11/5/99	7.4	11/5/99	3.5	11/5/99	3.7	11/5/99	1.9
11/6/99	3.48	11/6/99	4.13	11/6/99	4.9	11/6/99	1.9	11/6/99	1.9	11/6/99	2.4
11/7/99	2.60	11/7/99	4.45	11/7/99	5.2	11/7/99	2.8	11/7/99	2.4	11/7/99	2.9
11/8/99	6.58	11/8/99	5.54	11/8/99	14.3	11/8/99	4.3	11/8/99	3.7	11/8/99	4.4
11/9/99	7.00	11/9/99	6.44	11/9/99	10.2	11/9/99	3.0	11/9/99	5.0	11/9/99	5.2
11/10/99	3.56	11/10/99	6.18	11/10/99	9.5	11/10/99	3.5	11/10/99	2.9	11/10/99	3.8

C-1. USS CLAIRTON OPACITY -- DAILY AVERAGES (continued)

Battery 1		Battery 2		Battery 3		Battery 7		Battery 8		Battery 9	
Date	Opacity	Date	Opacity	Date	Opacity	Date	Opacity	Date	Opacity	Date	Opacity
11/11/99	7.25	11/11/99	4.25	11/11/99	5.3	11/11/99	3.8	11/11/99	2.3	11/11/99	4.5
11/12/99	4.83	11/12/99	4.82	11/12/99	7.1	11/12/99	3.3	11/12/99	1.8	11/12/99	4.0
11/13/99	4.85	11/13/99	4.88	11/13/99	9.8	11/13/99	2.5	11/13/99	2.3	11/13/99	4.7
11/14/99	4.88	11/14/99	6.38	11/14/99	5.2	11/14/99	3.1	11/14/99	2.9	11/14/99	6.9
11/15/99	6.34	11/15/99	6.01	11/15/99	9.1	11/15/99	3.2	11/15/99	3.3	11/15/99	5.6
11/16/99	6.39	11/16/99	4.81	11/16/99	12.0	11/16/99	3.6	11/16/99	2.6	11/16/99	5.2
11/17/99	6.06	11/17/99	5.56	11/17/99	4.7	11/17/99	3.9	11/17/99	4.0	11/17/99	6.3
11/18/99	5.41	11/18/99	4.07	11/18/99	8.2	11/18/99	2.9	11/18/99	3.6	11/18/99	4.8
11/19/99	4.87	11/19/99	1.67	11/19/99	10.5	11/19/99	2.9	11/19/99	3.3	11/19/99	4.2
11/20/99	6.95	11/20/99	3.35	11/20/99	6.7	11/20/99	1.6	11/20/99	2.7	11/20/99	3.0
11/21/99	4.49	11/21/99	4.66	11/21/99	9.2	11/21/99	1.8	11/21/99	3.1	11/21/99	3.5
11/22/99	5.20	11/22/99	1.50	11/22/99	12.7	11/22/99	1.2	11/22/99	3.5	11/22/99	4.8
11/23/99	4.68	11/23/99	4.76	11/23/99	5.8	11/23/99	1.3	11/23/99	3.9	11/23/99	4.6
11/24/99	3.13	11/24/99	4.73	11/24/99	7.5	11/24/99	1.1	11/24/99	2.9	11/24/99	3.2
11/25/99	4.79	11/25/99	3.65	11/25/99	8.9	11/25/99	1.6	11/25/99	3.3	11/25/99	6.0
11/26/99	4.95	11/26/99	3.89	11/26/99	8.7	11/26/99	1.8	11/26/99	2.7	11/26/99	7.6
11/27/99	3.30	11/27/99	2.15	11/27/99	7.0	11/27/99	2.4	11/27/99	2.5	11/27/99	3.6
11/28/99	3.77	11/28/99	1.95	11/28/99	9.5	11/28/99	1.6	11/28/99	2.3	11/28/99	3.7
11/29/99	4.84	11/29/99	1.64	11/29/99	7.4	11/29/99	1.8	11/29/99	3.4	11/29/99	4.5
11/30/99	5.71	11/30/99	1.41	11/30/99	5.8	11/30/99	3.1	11/30/99	4.5	11/30/99	4.5
12/1/99	6.53	12/1/99	1.05	12/1/99	4.6	12/1/99	2.2	12/1/99	3.8	12/1/99	10.4
12/2/99	8.20	12/2/99	1.27	12/2/99	3.4	12/2/99	2.6	12/2/99	3.4	12/2/99	7.3
12/3/99	3.85	12/3/99	1.36	12/3/99	3.4	12/3/99	2.7	12/3/99	2.7	12/3/99	5.1
12/4/99	0.85	12/4/99	1.15	12/4/99	3.0	12/4/99	2.1	12/4/99	2.6	12/4/99	2.4
12/5/99	1.57	12/5/99	1.05	12/5/99	1.3	12/5/99	4.3	12/5/99	3.4	12/5/99	4.8
12/6/99	1.00	12/6/99	1.51	12/6/99	1.2	12/6/99	4.1	12/6/99	3.3	12/6/99	4.3
12/7/99	1.11	12/7/99	1.90	12/7/99	1.4	12/7/99	4.3	12/7/99	2.7	12/7/99	3.4
12/8/99	1.53	12/8/99	2.01	12/8/99	2.4	12/8/99	3.3	12/8/99	2.8	12/8/99	4.2
12/9/99	1.11	12/9/99	1.54	12/9/99	2.4	12/9/99	2.6	12/9/99	2.9	12/9/99	4.1
12/10/99	0.76	12/10/99	0.79	12/10/99	1.4	12/10/99	1.0	12/10/99	1.6	12/10/99	1.1
12/11/99	2.44	12/11/99	2.33	12/11/99	3.1	12/11/99	2.5	12/11/99	3.8	12/11/99	4.9
12/12/99	2.31	12/12/99	1.95	12/12/99	2.8	12/12/99	2.6	12/12/99	5.0	12/12/99	4.9
12/13/99	2.45	12/13/99	2.04	12/13/99	2.5	12/13/99	3.4	12/13/99	6.8	12/13/99	6.5
12/14/99	2.49	12/14/99	3.35	12/14/99	2.3	12/14/99	2.5	12/14/99	4.1	12/14/99	4.4
12/15/99	2.40	12/15/99	2.47	12/15/99	2.1	12/15/99	4.4	12/15/99	5.1	12/15/99	2.9
12/16/99	3.14	12/16/99	4.49	12/16/99	3.7	12/16/99	3.4	12/16/99	4.7	12/16/99	4.8
12/17/99	2.92	12/17/99	3.18	12/17/99	3.1	12/17/99	4.3	12/17/99	4.2	12/17/99	6.7
12/18/99	3.64	12/18/99	3.59	12/18/99	3.5	12/18/99	4.4	12/18/99	5.1	12/18/99	8.9
12/19/99	3.30	12/19/99	3.28	12/19/99	3.5	12/19/99	4.2	12/19/99	5.2	12/19/99	7.8
12/20/99	4.53	12/20/99	3.45	12/20/99	4.0	12/20/99	4.1	12/20/99	4.9	12/20/99	9.6
12/21/99	2.28	12/21/99	2.12	12/21/99	3.4	12/21/99	4.1	12/21/99	4.4	12/21/99	5.8
12/22/99	0.48	12/22/99	0.62	12/22/99	1.6	12/22/99	3.6	12/22/99	5.1	12/22/99	5.4
12/23/99	0.62	12/23/99	0.65	12/23/99	1.6	12/23/99	4.1	12/23/99	3.5	12/23/99	4.4
12/24/99	0.91	12/24/99	0.63	12/24/99	2.1	12/24/99	3.9	12/24/99	3.1	12/24/99	6.1
12/25/99	0.22	12/25/99	0.78	12/25/99	3.3	12/25/99	3.1	12/25/99	4.3	12/25/99	4.8
12/26/99	0.39	12/26/99	1.25	12/26/99	3.8	12/26/99	3.3	12/26/99	4.4	12/26/99	7.8

C-1. USS CLAIRTON OPACITY -- DAILY AVERAGES (continued)

Battery 1		Battery 2		Battery 3		Battery 7		Battery 8		Battery 9	
Date	Opacity	Date	Opacity	Date	Opacity	Date	Opacity	Date	Opacity	Date	Opacity
12/27/99	0.40	12/27/99	1.75	12/27/99	3.3	12/27/99	3.2	12/27/99	4.6	12/27/99	12.9
12/28/99	0.64	12/28/99	1.13	12/28/99	3.5	12/28/99	2.8	12/28/99	5.4	12/28/99	8.0
12/29/99	0.33	12/29/99	1.90	12/29/99	3.2	12/29/99	4.2	12/29/99	4.8	12/29/99	10.4
12/30/99	4.02	12/30/99	1.47	12/30/99	2.8	12/30/99	2.9	12/30/99	7.3	12/30/99	17.6
12/31/99	5.61	12/31/99	1.45	12/31/99	1.8	12/31/99	4.2	12/31/99	5.3	12/31/99	10.6
1/1/00	2.05	1/1/00	1.32	1/1/00	3.0	1/1/00	3.4	1/1/00	4.7	1/1/00	5.5
1/2/00	7.60	1/2/00	3.06	1/2/00	1.4	1/2/00	3.6	1/2/00	10.4	1/2/00	10.0
1/3/00	8.88	1/3/00	1.65	1/3/00	2.6	1/3/00	2.4	1/3/00	5.0	1/3/00	8.7
1/4/00	3.95	1/4/00	3.15	1/4/00	3.5	1/4/00	2.5	1/4/00	4.6	1/4/00	12.9
1/5/00	2.78	1/5/00	4.31	1/5/00	5.0	1/5/00	3.8	1/5/00	4.2	1/5/00	4.5
1/6/00	5.01	1/6/00	3.32	1/6/00	5.8	1/6/00	5.0	1/6/00	6.2	1/6/00	7.9
1/7/00	3.16	1/7/00	1.84	1/7/00	3.3	1/7/00	4.0	1/7/00	3.5	1/7/00	3.0
1/8/00	8.09	1/8/00	2.87	1/8/00	6.6	1/8/00	5.3	1/8/00	6.1	1/8/00	8.9
1/9/00	6.51	1/9/00	2.06	1/9/00	5.2	1/9/00	5.6	1/9/00	5.3	1/9/00	8.1
1/10/00	3.93	1/10/00	2.33	1/10/00	4.8	1/10/00	5.6	1/10/00	6.2	1/10/00	4.7
1/11/00	4.73	1/11/00	2.12	1/11/00	4.5	1/11/00	2.6	1/11/00	5.9	1/11/00	5.3
1/12/00	3.61	1/12/00	2.42	1/12/00	4.3	1/12/00	3.0	1/12/00	3.9	1/12/00	5.6
1/13/00	3.36	1/13/00	0.90	1/13/00	2.3	1/13/00	4.8	1/13/00	3.4	1/13/00	4.7
1/14/00	1.53	1/14/00	1.14	1/14/00	3.2	1/14/00	3.7	1/14/00	5.0	1/14/00	4.5
1/15/00	1.79	1/15/00	1.33	1/15/00	4.3	1/15/00	3.4	1/15/00	5.9	1/15/00	4.8
1/16/00	1.13	1/16/00	2.63	1/16/00	3.6	1/16/00	2.4	1/16/00	5.7	1/16/00	5.3
1/17/00	1.72	1/17/00	2.12	1/17/00	3.2	1/17/00	2.3	1/17/00	6.7	1/17/00	5.4
1/18/00	2.80	1/18/00	5.09	1/18/00	6.4	1/18/00	3.2	1/18/00	6.6	1/18/00	6.7
1/19/00	1.40	1/19/00	1.80	1/19/00	1.9	1/19/00	2.4	1/19/00	5.1	1/19/00	9.1
1/20/00	2.14	1/20/00	1.45	1/20/00	2.1	1/20/00	5.5	1/20/00	5.6	1/20/00	10.3
1/21/00	2.03	1/21/00	1.42	1/21/00	3.6	1/21/00	6.8	1/21/00	5.7	1/21/00	4.9
1/22/00	2.19	1/22/00	1.36	1/22/00	2.7	1/22/00	2.9	1/22/00	8.1	1/22/00	5.8
1/23/00	1.72	1/23/00	1.47	1/23/00	3.0	1/23/00	4.5	1/23/00	5.5	1/23/00	4.8
1/24/00	1.95	1/24/00	1.05	1/24/00	2.0	1/24/00	6.4	1/24/00	4.2	1/24/00	5.7
1/25/00	1.66	1/25/00	1.63	1/25/00	2.3	1/25/00	2.4	1/25/00	3.1	1/25/00	4.0
1/26/00	2.23	1/26/00	1.15	1/26/00	3.8	1/26/00	3.5	1/26/00	3.9	1/26/00	3.4
1/27/00	2.83	1/27/00	1.95	1/27/00	3.3	1/27/00	4.0	1/27/00	4.3	1/27/00	3.3
1/28/00	2.21	1/28/00	1.27	1/28/00	2.3	1/28/00	2.9	1/28/00	4.6	1/28/00	5.2
1/29/00	2.10	1/29/00	1.73	1/29/00	12.0	1/29/00	3.8	1/29/00	6.4	1/29/00	4.5
1/30/00	1.80	1/30/00	1.75	1/30/00	4.4	1/30/00	3.8	1/30/00	7.6	1/30/00	8.6
1/31/00	2.18	1/31/00	1.27	1/31/00	5.2	1/31/00	3.3	1/31/00	3.9	1/31/00	3.0

C-1. USS CLAIRTON OPACITY -- DAILY AVERAGES (continued)

Battery 13		Battery 14		Battery 15		Battery 19		Battery 20		Battery B	
Date	Opacity	Date	Opacity	Date	Opacity	Date	Opacity	Date	Opacity	Date	Opacity
8/1/98	0.1	8/1/98	0.7	8/1/98	0.8	8/1/98	2.9	8/1/98	1.8	8/1/98	1.4
8/2/98	0.3	8/2/98	0.5	8/2/98	0.7	8/2/98	2.0	8/2/98	1.9	8/2/98	1.2
8/3/98	0.0	8/3/98	0.4	8/3/98	0.3	8/3/98	2.1	8/3/98	1.1	8/3/98	2.0
8/4/98	0.0	8/4/98	0.4	8/4/98	0.5	8/4/98	2.8	8/4/98	1.7	8/4/98	1.2
8/11/98	0.0	8/11/98	0.2	8/11/98	0.1	8/11/98	1.5	8/11/98	0.9	8/11/98	0.6
8/12/98	0.4	8/12/98	1.1	8/12/98	0.5	8/12/98	2.6	8/12/98	2.1	8/12/98	2.0
8/13/98	0.2	8/13/98	0.8	8/13/98	1.1	8/13/98	3.2	8/13/98	3.1	8/13/98	1.7
8/14/98	0.3	8/14/98	0.8	8/14/98	0.7	8/14/98	2.5	8/14/98	6.0	8/14/98	1.8
8/15/98	0.9	8/15/98	1.2	8/15/98	0.6	8/15/98	3.8	8/15/98	3.6	8/15/98	2.8
8/16/98	0.4	8/16/98	0.7	8/16/98	1.1	8/16/98	3.8	8/16/98	3.5	8/16/98	2.2
8/17/98	0.4	8/17/98	0.9	8/17/98	0.6	8/17/98	3.4	8/17/98	10.3	8/17/98	2.5
8/18/98	0.6	8/18/98	1.2	8/18/98	1.3	8/18/98	2.7	8/18/98	3.4	8/18/98	3.8
8/19/98	0.4	8/19/98	0.8	8/19/98	0.9	8/19/98	3.7	8/19/98	3.9	8/19/98	1.5
8/20/98	0.8	8/20/98	0.9	8/20/98	0.5	8/20/98	8.9	8/20/98	2.9	8/20/98	2.4
8/21/98	0.5	8/21/98	1.3	8/21/98	0.9	8/21/98	4.9	8/21/98	3.1	8/21/98	2.6
8/22/98	0.7	8/22/98	0.4	8/22/98	0.4	8/22/98	5.1	8/22/98	2.4	8/22/98	1.0
8/23/98	0.5	8/23/98	1.1	8/23/98	1.0	8/23/98	4.3	8/23/98	2.6	8/23/98	1.8
8/24/98	0.3	8/24/98	0.6	8/24/98	0.6	8/24/98	3.7	8/24/98	1.4	8/24/98	1.9
8/25/98	0.5	8/25/98	0.7	8/25/98	1.9	8/25/98	4.2	8/25/98	12.6	8/25/98	2.3
8/26/98	0.7	8/26/98	0.7	8/26/98	2.5	8/26/98	4.9	8/26/98	1.9	8/26/98	2.1
8/27/98	0.7	8/27/98	0.8	8/27/98	2.5	8/27/98	4.9	8/27/98	1.6	8/27/98	2.1
8/28/98	0.5	8/28/98	0.7	8/28/98	2.6	8/28/98	4.9	8/28/98	1.4	8/28/98	2.3
8/29/98	0.6	8/29/98	0.8	8/29/98	3.2	8/29/98	8.6	8/29/98	1.7	8/29/98	1.4
8/30/98	0.5	8/30/98	1.2	8/30/98	2.8	8/30/98	5.1	8/30/98	1.8	8/30/98	2.7
8/31/98	0.4	8/31/98	0.7	8/31/98	2.4	8/31/98	5.4	8/31/98	1.7	8/31/98	3.0
9/1/98	0.4	9/1/98	0.8	9/1/98	3.8	9/1/98	4.8	9/1/98	2.0	9/1/98	2.7
9/2/98	0.5	9/2/98	0.9	9/2/98	3.1	9/2/98	4.7	9/2/98	4.5	9/2/98	3.9
9/3/98	1.1	9/3/98	0.7	9/3/98	2.7	9/3/98	4.7	9/3/98	2.2	9/3/98	3.1
9/4/98	0.7	9/4/98	0.9	9/4/98	2.2	9/4/98	4.3	9/4/98	4.1	9/4/98	3.8
9/5/98	0.5	9/5/98	1.1	9/5/98	3.2	9/5/98	5.1	9/5/98	8.9	9/5/98	5.0
9/6/98	0.5	9/6/98	0.9	9/6/98	3.6	9/6/98	5.1	9/6/98	3.3	9/6/98	4.7
9/7/98	0.8	9/7/98	1.2	9/7/98	3.5	9/7/98	5.9	9/7/98	6.5	9/7/98	2.8
9/8/98	0.9	9/8/98	2.0	9/8/98	3.2	9/8/98	4.8	9/8/98	4.4	9/8/98	4.5
9/9/98	0.4	9/9/98	1.2	9/9/98	2.7	9/9/98	5.2	9/9/98	3.1	9/9/98	3.4
9/10/98	0.3	9/10/98	0.8	9/10/98	2.2	9/10/98	3.7	9/10/98	4.5	9/10/98	2.4
9/11/98	0.1	9/11/98	0.6	9/11/98	1.7	9/11/98	4.2	9/11/98	2.2	9/11/98	2.4
9/12/98	0.3	9/12/98	0.6	9/12/98	1.8	9/12/98	4.9	9/12/98	2.1	9/12/98	4.6
9/13/98	0.4	9/13/98	0.4	9/13/98	1.8	9/13/98	6.0	9/13/98	3.6	9/13/98	4.4
9/14/98	0.3	9/14/98	0.5	9/14/98	1.6	9/14/98	4.3	9/14/98	2.6	9/14/98	5.7
9/15/98	0.5	9/15/98	0.4	9/15/98	1.6	9/15/98	4.4	9/15/98	2.3	9/15/98	5.3
9/16/98	0.8	9/16/98	0.5	9/16/98	2.2	9/16/98	5.6	9/16/98	3.4	9/16/98	4.8
9/17/98	0.3	9/17/98	0.6	9/17/98	1.7	9/17/98	4.6	9/17/98	2.9	9/17/98	5.1
9/18/98	0.4	9/18/98	0.6	9/18/98	1.8	9/18/98	4.9	9/18/98	3.5	9/18/98	2.6
9/19/98	0.7	9/19/98	0.6	9/19/98	2.4	9/19/98	4.7	9/19/98	2.9	9/19/98	5.1
9/20/98	1.1	9/20/98	0.9	9/20/98	1.8	9/20/98	5.1	9/20/98	3.2	9/20/98	3.3

C-1. USS CLAIRTON OPACITY -- DAILY AVERAGES (continued)

Battery 13		Battery 14		Battery 15		Battery 19		Battery 20		Battery B	
Date	Opacity	Date	Opacity	Date	Opacity	Date	Opacity	Date	Opacity	Date	Opacity
9/21/98	0.5	9/21/98	0.4	9/21/98	1.4	9/21/98	5.5	9/21/98	3.1	9/21/98	2.3
9/22/98	0.6	9/22/98	0.7	9/22/98	1.9	9/22/98	5.1	9/22/98	4.3	9/22/98	3.1
9/23/98	0.3	9/23/98	0.7	9/23/98	1.7	9/23/98	4.3	9/23/98	9.6	9/23/98	3.4
9/24/98	0.5	9/24/98	0.8	9/24/98	2.6	9/24/98	4.7	9/24/98	8.3	9/24/98	3.4
9/25/98	0.6	9/25/98	1.2	9/25/98	2.1	9/25/98	5.4	9/25/98	5.4	9/25/98	3.2
9/26/98	0.3	9/26/98	0.7	9/26/98	2.3	9/26/98	5.8	9/26/98	3.8	9/26/98	2.6
9/27/98	0.7	9/27/98	0.7	9/27/98	2.3	9/27/98	6.0	9/27/98	2.3	9/27/98	2.5
9/28/98	0.2	9/28/98	0.8	9/28/98	1.6	9/28/98	5.4	9/28/98	2.2	9/28/98	4.7
9/29/98	0.5	9/29/98	1.0	9/29/98	1.8	9/29/98	8.1	9/29/98	2.4	9/29/98	2.5
9/30/98	0.6	9/30/98	0.9	9/30/98	3.5	9/30/98	7.7	9/30/98	2.6	9/30/98	2.4
10/1/98	0.8	10/1/98	0.9	10/1/98	2.2	10/1/98	5.1	10/1/98	4.3	10/1/98	3.7
10/2/98	0.6	10/2/98	1.3	10/2/98	1.8	10/2/98	4.6	10/2/98	2.5	10/2/98	3.5
10/3/98	0.2	10/3/98	1.0	10/3/98	2.0	10/3/98	3.9	10/3/98	1.9	10/3/98	3.6
10/4/98	0.4	10/4/98	0.8	10/4/98	1.7	10/4/98	5.1	10/4/98	1.6	10/4/98	3.2
10/5/98	0.6	10/5/98	0.8	10/5/98	1.2	10/5/98	7.1	10/5/98	2.4	10/5/98	3.8
10/6/98	0.0	10/6/98	0.7	10/6/98	1.2	10/6/98	9.4	10/6/98	3.1	10/6/98	4.3
10/7/98	0.7	10/7/98	0.7	10/7/98	1.3	10/7/98	10.1	10/7/98	3.2	10/7/98	3.5
10/8/98	0.3	10/8/98	0.8	10/8/98	1.1	10/8/98	9.9	10/8/98	1.9	10/8/98	2.7
10/9/98	0.5	10/9/98	1.0	10/9/98	1.7	10/9/98	9.9	10/9/98	2.3	10/9/98	3.6
10/10/98	0.6	10/10/98	0.8	10/10/98	1.4	10/10/98	11.6	10/10/98	2.5	10/10/98	2.9
10/11/98	0.3	10/11/98	1.1	10/11/98	1.3	10/11/98	9.3	10/11/98	4.3	10/11/98	3.8
10/12/98	0.6	10/12/98	1.9	10/12/98	2.1	10/12/98	7.2	10/12/98	5.5	10/12/98	4.3
10/13/98	0.9	10/13/98	1.4	10/13/98	2.6	10/13/98	9.8	10/13/98	1.8	10/13/98	3.1
10/14/98	0.8	10/14/98	1.9	10/14/98	2.9	10/14/98	9.1	10/14/98	1.7	10/14/98	3.3
10/15/98	0.8	10/15/98	1.7	10/15/98	3.1	10/15/98	11.5	10/15/98	1.6	10/15/98	4.1
10/16/98	1.0	10/16/98	1.4	10/16/98	2.8	10/16/98	15.4	10/16/98	1.2	10/16/98	2.4
10/17/98	1.2	10/17/98	1.4	10/17/98	3.0	10/17/98	12.9	10/17/98	2.5	10/17/98	2.8
10/18/98	0.8	10/18/98	1.5	10/18/98	3.0	10/18/98	6.9	10/18/98	2.2	10/18/98	2.6
10/19/98	0.5	10/19/98	1.3	10/19/98	2.6	10/19/98	10.0	10/19/98	1.3	10/19/98	3.6
10/20/98	0.9	10/20/98	1.2	10/20/98	2.7	10/20/98	10.6	10/20/98	1.4	10/20/98	3.5
10/21/98	1.0	10/21/98	1.9	10/21/98	3.0	10/21/98	7.5	10/21/98	2.1	10/21/98	6.0
10/22/98	0.9	10/22/98	1.8	10/22/98	3.5	10/22/98	6.9	10/22/98	2.0	10/22/98	6.7
10/23/98	1.6	10/23/98	1.9	10/23/98	3.5	10/23/98	6.5	10/23/98	0.9	10/23/98	5.9
10/24/98	1.6	10/24/98	1.6	10/24/98	3.0	10/24/98	7.8	10/24/98	0.6	10/24/98	6.2
10/25/98	1.2	10/25/98	1.5	10/25/98	2.8	10/25/98	6.9	10/25/98	1.0	10/25/98	4.7
10/26/98	0.6	10/26/98	1.5	10/26/98	2.5	10/26/98	10.0	10/26/98	2.6	10/26/98	5.6
10/27/98	0.3	10/27/98	1.2	10/27/98	2.7	10/27/98	5.7	10/27/98	2.0	10/27/98	4.0
10/28/98	0.1	10/28/98	1.1	10/28/98	2.3	10/28/98	9.7	10/28/98	1.7	10/28/98	5.5
10/29/98	0.5	10/29/98	1.2	10/29/98	2.6	10/29/98	5.5	10/29/98	2.1	10/29/98	8.2
10/30/98	0.8	10/30/98	1.4	10/30/98	2.2	10/30/98	4.5	10/30/98	3.4	10/30/98	2.5
10/31/98	0.8	10/31/98	2.0	10/31/98	2.3	10/31/98	4.0	10/31/98	5.5	10/31/98	5.1
11/1/98	0.8	11/1/98	2.1	11/1/98	2.7	11/1/98	4.1	11/1/98	4.2	11/1/98	4.9
11/2/98	0.5	11/2/98	2.1	11/2/98	2.2	11/2/98	6.2	11/2/98	2.2	11/2/98	5.7
11/3/98	0.5	11/3/98	2.2	11/3/98	2.2	11/3/98	5.7	11/3/98	1.9	11/3/98	5.2
11/4/98	0.8	11/4/98	2.5	11/4/98	2.9	11/4/98	6.5	11/4/98	1.7	11/4/98	5.4
11/5/98	1.6	11/5/98	2.3	11/5/98	3.0	11/5/98	7.4	11/5/98	1.6	11/5/98	8.7

C-1. USS CLAIRTON OPACITY -- DAILY AVERAGES (continued)

Battery 13		Battery 14		Battery 15		Battery 19		Battery 20		Battery B	
Date	Opacity	Date	Opacity	Date	Opacity	Date	Opacity	Date	Opacity	Date	Opacity
11/6/98	2.0	11/6/98	1.9	11/6/98	3.5	11/6/98	4.1	11/6/98	2.7	11/6/98	6.8
11/7/98	2.0	11/7/98	1.4	11/7/98	2.9	11/7/98	4.5	11/7/98	0.9	11/7/98	9.5
11/8/98	1.9	11/8/98	1.3	11/8/98	3.0	11/8/98	4.8	11/8/98	1.3	11/8/98	8.7
11/9/98	1.9	11/9/98	1.3	11/9/98	2.0	11/9/98	5.1	11/9/98	0.5	11/9/98	7.3
11/10/98	0.6	11/10/98	1.2	11/10/98	2.7	11/10/98	3.7	11/10/98	1.8	11/10/98	8.6
11/11/98	0.5	11/11/98	1.6	11/11/98	2.3	11/11/98	4.8	11/11/98	1.6	11/11/98	6.6
11/12/98	0.7	11/12/98	1.7	11/12/98	3.0	11/12/98	2.9	11/12/98	2.0	11/12/98	4.5
11/13/98	1.6	11/13/98	2.2	11/13/98	3.5	11/13/98	4.0	11/13/98	3.9	11/13/98	5.9
11/14/98	0.3	11/14/98	1.3	11/14/98	2.4	11/14/98	3.7	11/14/98	2.4	11/14/98	5.1
11/15/98	0.2	11/15/98	1.1	11/15/98	2.0	11/15/98	3.4	11/15/98	5.3	11/15/98	8.4
11/16/98	0.5	11/16/98	1.4	11/16/98	2.5	11/16/98	3.0	11/16/98	6.1	11/16/98	7.9
11/17/98	0.4	11/17/98	1.5	11/17/98	2.3	11/17/98	2.7	11/17/98	3.7	11/17/98	7.3
11/18/98	0.7	11/18/98	1.5	11/18/98	2.5	11/18/98	2.5	11/18/98	1.4	11/18/98	6.3
11/19/98	0.7	11/19/98	1.3	11/19/98	2.7	11/19/98	3.2	11/19/98	3.3	11/19/98	19.7
11/20/98	0.6	11/20/98	1.5	11/20/98	2.9	11/20/98	1.6	11/20/98	1.6	11/20/98	14.3
11/21/98	1.4	11/21/98	1.8	11/21/98	3.0	11/21/98	3.6	11/21/98	3.4	11/21/98	18.4
11/22/98	1.1	11/22/98	1.7	11/22/98	2.3	11/22/98	3.5	11/22/98	3.1	11/22/98	21.2
11/23/98	0.5	11/23/98	1.1	11/23/98	2.0	11/23/98	2.7	11/23/98	2.6	11/23/98	43.9
11/24/98	0.4	11/24/98	1.4	11/24/98	1.9	11/24/98	2.8	11/24/98	2.5	11/24/98	17.8
11/25/98	0.5	11/25/98	1.5	11/25/98	2.3	11/25/98	3.8	11/25/98	1.2	11/25/98	12.6
11/26/98	0.4	11/26/98	1.4	11/26/98	2.6	11/26/98	3.6	11/26/98	2.9	11/26/98	12.4
11/27/98	0.6	11/27/98	1.3	11/27/98	2.2	11/27/98	2.6	11/27/98	3.7	11/27/98	11.0
11/28/98	0.7	11/28/98	1.3	11/28/98	1.7	11/28/98	3.3	11/28/98	3.1	11/28/98	10.9
11/29/98	0.4	11/29/98	1.2	11/29/98	2.0	11/29/98	3.6	11/29/98	1.5	11/29/98	8.8
11/30/98	0.6	11/30/98	1.3	11/30/98	2.3	11/30/98	3.2	11/30/98	4.2	11/30/98	7.4
12/1/98	0.5	12/1/98	1.3	12/1/98	2.9	12/1/98	4.4	12/1/98	6.3	12/1/98	6.4
12/2/98	1.1	12/2/98	1.8	12/2/98	2.8	12/2/98	4.8	12/2/98	3.7	12/2/98	6.8
12/3/98	1.6	12/3/98	1.5	12/3/98	2.0	12/3/98	7.1	12/3/98	2.6	12/3/98	4.8
12/4/98	0.5	12/4/98	1.4	12/4/98	1.8	12/4/98	4.2	12/4/98	1.8	12/4/98	4.4
12/5/98	0.6	12/5/98	1.3	12/5/98	1.6	12/5/98	5.3	12/5/98	0.7	12/5/98	4.0
12/6/98	0.6	12/6/98	1.0	12/6/98	1.2	12/6/98	4.7	12/6/98	0.3	12/6/98	5.0
12/7/98	0.9	12/7/98	1.5	12/7/98	2.3	12/7/98	3.6	12/7/98	1.0	12/7/98	3.7
12/8/98	1.5	12/8/98	1.9	12/8/98	2.3	12/8/98	7.1	12/8/98	1.3	12/8/98	4.3
12/9/98	1.7	12/9/98	1.6	12/9/98	2.7	12/9/98	6.3	12/9/98	0.6	12/9/98	3.1
12/10/98	2.2	12/10/98	2.3	12/10/98	3.5	12/10/98	6.4	12/10/98	0.5	12/10/98	5.3
12/11/98	1.9	12/11/98	1.7	12/11/98	3.3	12/11/98	3.7	12/11/98	0.3	12/11/98	5.4
12/12/98	2.1	12/12/98	1.7	12/12/98	3.3	12/12/98	5.9	12/12/98	0.8	12/12/98	8.9
12/13/98	1.4	12/13/98	1.5	12/13/98	3.2	12/13/98	9.2	12/13/98	1.3	12/13/98	4.4
12/14/98	2.0	12/14/98	1.8	12/14/98	3.5	12/14/98	4.8	12/14/98	0.6	12/14/98	4.1
12/15/98	2.1	12/15/98	1.7	12/15/98	4.0	12/15/98	3.2	12/15/98	0.4	12/15/98	3.3
12/16/98	2.2	12/16/98	1.6	12/16/98	4.0	12/16/98	6.2	12/16/98	0.3	12/16/98	4.7
12/17/98	1.7	12/17/98	1.6	12/17/98	4.5	12/17/98	7.7	12/17/98	4.9	12/17/98	3.9
12/18/98	2.1	12/18/98	1.7	12/18/98	5.2	12/18/98	7.2	12/18/98	6.7	12/18/98	4.6
12/19/98	1.5	12/19/98	1.4	12/19/98	4.8	12/19/98	6.0	12/19/98	4.9	12/19/98	3.4
12/20/98	1.4	12/20/98	1.3	12/20/98	4.6	12/20/98	6.0	12/20/98	1.4	12/20/98	2.5
12/21/98	1.5	12/21/98	1.3	12/21/98	4.8	12/21/98	6.4	12/21/98	1.4	12/21/98	3.4

C-1. USS CLAIRTON OPACITY -- DAILY AVERAGES (continued)

Battery 13		Battery 14		Battery 15		Battery 19		Battery 20		Battery B	
Date	Opacity	Date	Opacity	Date	Opacity	Date	Opacity	Date	Opacity	Date	Opacity
12/22/98	2.5	12/22/98	1.8	12/22/98	3.0	12/22/98	6.5	12/22/98	9.8	12/22/98	3.9
12/23/98	3.2	12/23/98	2.0	12/23/98	1.8	12/23/98	4.5	12/23/98	2.4	12/23/98	6.0
12/24/98	2.5	12/24/98	2.0	12/24/98	1.9	12/24/98	4.1	12/24/98	0.9	12/24/98	7.7
12/25/98	2.9	12/25/98	1.9	12/25/98	2.0	12/25/98	4.9	12/25/98	1.5	12/25/98	6.7
12/26/98	2.3	12/26/98	1.7	12/26/98	1.6	12/26/98	4.8	12/26/98	1.7	12/26/98	6.9
12/27/98	2.1	12/27/98	1.7	12/27/98	2.3	12/27/98	5.2	12/27/98	1.2	12/27/98	7.0
12/28/98	1.8	12/28/98	1.6	12/28/98	2.1	12/28/98	5.9	12/28/98	0.5	12/28/98	6.9
12/29/98	2.4	12/29/98	1.7	12/29/98	2.9	12/29/98	4.0	12/29/98	2.1	12/29/98	5.9
12/30/98	3.2	12/30/98	2.0	12/30/98	4.0	12/30/98	4.5	12/30/98	1.8	12/30/98	4.6
12/31/98	3.5	12/31/98	2.2	12/31/98	5.0	12/31/98	6.1	12/31/98	3.6	12/31/98	7.0
1/1/99	3.2	1/1/99	2.3	1/1/99	4.8	1/1/99	8.0	1/1/99	7.0	1/1/99	6.6
1/2/99	3.2	1/2/99	1.9	1/2/99	4.9	1/2/99	6.3	1/2/99	6.3	1/2/99	6.9
1/3/99	2.6	1/3/99	2.0	1/3/99	6.5	1/3/99	7.2	1/3/99	3.6	1/3/99	5.7
1/4/99	3.5	1/4/99	2.2	1/4/99	4.7	1/4/99	4.0	1/4/99	2.2	1/4/99	7.3
1/5/99	14.4	1/5/99	2.3	1/5/99	1.6	1/5/99	5.3	1/5/99	4.4	1/5/99	6.7
1/6/99	9.1	1/6/99	2.1	1/6/99	1.5	1/6/99	5.8	1/6/99	2.7	1/6/99	7.3
1/7/99	1.6	1/7/99	2.2	1/7/99	1.7	1/7/99	5.2	1/7/99	1.1	1/7/99	9.2
1/8/99	1.1	1/8/99	1.8	1/8/99	1.8	1/8/99	11.3	1/8/99	1.0	1/8/99	11.3
1/9/99	1.3	1/9/99	2.1	1/9/99	2.0	1/9/99	7.4	1/9/99	0.9	1/9/99	7.8
1/10/99	1.9	1/10/99	2.3	1/10/99	2.8	1/10/99	9.0	1/10/99	1.2	1/10/99	8.6
1/11/99	2.6	1/11/99	3.1	1/11/99	3.5	1/11/99	8.9	1/11/99	1.6	1/11/99	9.3
1/12/99	0.7	1/12/99	1.8	1/12/99	3.0	1/12/99	6.9	1/12/99	1.4	1/12/99	7.5
1/13/99	0.7	1/13/99	1.8	1/13/99	2.7	1/13/99	5.0	1/13/99	1.5	1/13/99	4.4
1/14/99	1.2	1/14/99	2.1	1/14/99	3.4	1/14/99	4.8	1/14/99	1.6	1/14/99	5.8
1/15/99	1.7	1/15/99	2.5	1/15/99	3.6	1/15/99	3.9	1/15/99	1.0	1/15/99	6.1
1/16/99	1.0	1/16/99	1.9	1/16/99	3.6	1/16/99	6.1	1/16/99	1.0	1/16/99	5.3
1/17/99	0.7	1/17/99	1.7	1/17/99	3.5	1/17/99	7.3	1/17/99	0.4	1/17/99	3.4
1/18/99	0.5	1/18/99	1.7	1/18/99	3.7	1/18/99	6.5	1/18/99	0.6	1/18/99	9.0
1/19/99	0.6	1/19/99	1.7	1/19/99	4.3	1/19/99	5.3	1/19/99	1.3	1/19/99	9.1
1/20/99	0.8	1/20/99	1.8	1/20/99	4.3	1/20/99	5.6	1/20/99	0.9	1/20/99	7.9
1/21/99	1.1	1/21/99	1.9	1/21/99	4.6	1/21/99	5.6	1/21/99	0.6	1/21/99	5.0
1/22/99	0.5	1/22/99	1.5	1/22/99	2.9	1/22/99	6.3	1/22/99	0.7	1/22/99	2.7
1/23/99	0.2	1/23/99	1.4	1/23/99	0.8	1/23/99	4.3	1/23/99	1.0	1/23/99	2.4
1/24/99	0.8	1/24/99	1.8	1/24/99	2.0	1/24/99	3.1	1/24/99	1.8	1/24/99	2.6
1/25/99	1.1	1/25/99	1.9	1/25/99	2.0	1/25/99	1.8	1/25/99	1.5	1/25/99	3.0
1/26/99	1.0	1/26/99	1.9	1/26/99	1.9	1/26/99	2.8	1/26/99	1.2	1/26/99	3.2
1/27/99	0.9	1/27/99	1.8	1/27/99	2.1	1/27/99	3.2	1/27/99	1.1	1/27/99	5.3
1/28/99	0.5	1/28/99	1.6	1/28/99	2.6	1/28/99	2.5	1/28/99	1.9	1/28/99	3.3
1/29/99	1.0	1/29/99	2.1	1/29/99	3.0	1/29/99	2.3	1/29/99	1.5	1/29/99	3.5
1/30/99	1.1	1/30/99	2.0	1/30/99	3.4	1/30/99	2.5	1/30/99	1.2	1/30/99	5.0
1/31/99	1.0	1/31/99	1.9	1/31/99	3.2	1/31/99	4.0	1/31/99	1.2	1/31/99	5.0
2/1/99	0.8	2/1/99	1.7	2/1/99	3.4	2/1/99	7.3	2/1/99	1.3	2/1/99	4.4
2/2/99	1.2	2/2/99	1.7	2/2/99	3.6	2/2/99	4.6	2/2/99	2.0	2/2/99	4.9
2/3/99	1.2	2/3/99	1.8	2/3/99	4.1	2/3/99	2.3	2/3/99	1.3	2/3/99	4.5
2/4/99	1.3	2/4/99	2.0	2/4/99	4.3	2/4/99	2.9	2/4/99	1.1	2/4/99	5.0
2/5/99	1.2	2/5/99	1.9	2/5/99	2.8	2/5/99	2.5	2/5/99	1.5	2/5/99	3.9

C-1. USS CLAIRTON OPACITY -- DAILY AVERAGES (continued)

Battery 13		Battery 14		Battery 15		Battery 19		Battery 20		Battery B	
Date	Opacity	Date	Opacity	Date	Opacity	Date	Opacity	Date	Opacity	Date	Opacity
2/6/99	1.1	2/6/99	1.8	2/6/99	1.8	2/6/99	4.8	2/6/99	1.2	2/6/99	3.8
2/7/99	1.3	2/7/99	2.2	2/7/99	1.9	2/7/99	6.9	2/7/99	2.1	2/7/99	7.9
2/8/99	1.6	2/8/99	2.1	2/8/99	2.8	2/8/99	4.2	2/8/99	0.8	2/8/99	5.1
2/9/99	1.1	2/9/99	2.1	2/9/99	2.7	2/9/99	7.1	2/9/99	1.3	2/9/99	3.0
2/10/99	1.0	2/10/99	1.8	2/10/99	2.7	2/10/99	11.4	2/10/99	1.7	2/10/99	3.1
2/11/99	1.0	2/11/99	1.6	2/11/99	3.1	2/11/99	4.3	2/11/99	1.4	2/11/99	7.4
2/12/99	1.5	2/12/99	1.6	2/12/99	4.0	2/12/99	3.8	2/12/99	2.1	2/12/99	3.7
2/13/99	2.2	2/13/99	2.2	2/13/99	4.2	2/13/99	4.9	2/13/99	2.9	2/13/99	4.1
2/14/99	1.8	2/14/99	2.4	2/14/99	4.6	2/14/99	3.1	2/14/99	2.4	2/14/99	4.0
2/15/99	1.6	2/15/99	2.0	2/15/99	5.0	2/15/99	4.8	2/15/99	0.9	2/15/99	3.2
2/16/99	1.0	2/16/99	1.6	2/16/99	4.8	2/16/99	3.2	2/16/99	0.8	2/16/99	2.7
2/17/99	1.1	2/17/99	1.5	2/17/99	5.6	2/17/99	3.5	2/17/99	1.5	2/17/99	3.1
2/18/99	1.5	2/18/99	1.8	2/18/99	5.6	2/18/99	3.6	2/18/99	1.4	2/18/99	3.3
2/19/99	1.6	2/19/99	2.0	2/19/99	5.6	2/19/99	2.5	2/19/99	1.8	2/19/99	3.0
2/20/99	2.3	2/20/99	2.4	2/20/99	6.4	2/20/99	4.4	2/20/99	0.7	2/20/99	3.4
2/21/99	2.3	2/21/99	2.1	2/21/99	6.3	2/21/99	3.3	2/21/99	1.4	2/21/99	2.6
2/22/99	2.1	2/22/99	2.1	2/22/99	3.4	2/22/99	3.4	2/22/99	0.9	2/22/99	4.2
2/23/99	2.1	2/23/99	2.0	2/23/99	0.7	2/23/99	4.0	2/23/99	1.5	2/23/99	3.0
2/24/99	1.9	2/24/99	1.9	2/24/99	0.6	2/24/99	8.4	2/24/99	0.8	2/24/99	3.4
2/25/99	2.0	2/25/99	1.9	2/25/99	0.7	2/25/99	4.4	2/25/99	0.8	2/25/99	3.2
2/26/99	2.0	2/26/99	1.8	2/26/99	0.7	2/26/99	4.0	2/26/99	1.0	2/26/99	4.3
2/27/99	2.1	2/27/99	2.0	2/27/99	1.1	2/27/99	4.0	2/27/99	0.3	2/27/99	3.4
2/28/99	2.3	2/28/99	1.6	2/28/99	1.6	2/28/99	3.7	2/28/99	0.5	2/28/99	3.3
3/1/99	3.3	3/1/99	2.0	3/1/99	1.9	3/1/99	3.5	3/1/99	0.8	3/1/99	3.3
3/2/99	3.0	3/2/99	1.9	3/2/99	2.1	3/2/99	3.6	3/2/99	1.1	3/2/99	3.2
3/3/99	2.7	3/3/99	1.6	3/3/99	2.2	3/3/99	3.4	3/3/99	0.6	3/3/99	4.5
3/4/99	3.4	3/4/99	2.1	3/4/99	2.3	3/4/99	3.4	3/4/99	0.9	3/4/99	3.0
3/5/99	3.4	3/5/99	2.1	3/5/99	2.4	3/5/99	4.5	3/5/99	0.9	3/5/99	3.9
3/6/99	3.4	3/6/99	2.0	3/6/99	2.9	3/6/99	4.5	3/6/99	0.5	3/6/99	2.6
3/7/99	4.0	3/7/99	2.4	3/7/99	3.2	3/7/99	4.3	3/7/99	0.7	3/7/99	3.1
3/8/99	3.8	3/8/99	2.2	3/8/99	3.0	3/8/99	3.4	3/8/99	0.5	3/8/99	2.5
3/9/99	3.6	3/9/99	2.1	3/9/99	3.1	3/9/99	3.5	3/9/99	0.4	3/9/99	3.8
3/10/99	3.7	3/10/99	2.0	3/10/99	3.5	3/10/99	4.2	3/10/99	0.9	3/10/99	4.8
3/11/99	3.5	3/11/99	1.9	3/11/99	2.6	3/11/99	10.2	3/11/99	0.6	3/11/99	5.1
3/12/99	2.6	3/12/99	1.4	3/12/99	1.1	3/12/99	4.0	3/12/99	0.7	3/12/99	2.7
3/13/99	2.4	3/13/99	1.3	3/13/99	0.5	3/13/99	3.7	3/13/99	0.5	3/13/99	3.0
3/14/99	2.6	3/14/99	1.2	3/14/99	0.9	3/14/99	4.0	3/14/99	0.7	3/14/99	3.3
3/15/99	2.2	3/15/99	1.3	3/15/99	0.6	3/15/99	4.6	3/15/99	1.0	3/15/99	2.5
3/16/99	2.2	3/16/99	1.1	3/16/99	0.9	3/16/99	4.7	3/16/99	1.0	3/16/99	2.1
3/17/99	1.8	3/17/99	1.0	3/17/99	1.0	3/17/99	5.3	3/17/99	1.1	3/17/99	1.9
3/18/99	1.8	3/18/99	0.8	3/18/99	1.9	3/18/99	6.5	3/18/99	1.2	3/18/99	1.7
3/19/99	2.4	3/19/99	0.9	3/19/99	2.1	3/19/99	7.1	3/19/99	1.2	3/19/99	2.1
3/20/99	2.4	3/20/99	1.0	3/20/99	1.6	3/20/99	7.0	3/20/99	1.1	3/20/99	1.4
3/21/99	2.3	3/21/99	1.1	3/21/99	2.3	3/21/99	5.8	3/21/99	4.0	3/21/99	1.5
3/22/99	2.7	3/22/99	1.0	3/22/99	3.0	3/22/99	5.2	3/22/99	3.3	3/22/99	2.0
3/23/99	2.6	3/23/99	0.9	3/23/99	2.5	3/23/99	6.2	3/23/99	3.7	3/23/99	1.9

C-1. USS CLAIRTON OPACITY -- DAILY AVERAGES (continued)

Battery 13		Battery 14		Battery 15		Battery 19		Battery 20		Battery B	
Date	Opacity	Date	Opacity	Date	Opacity	Date	Opacity	Date	Opacity	Date	Opacity
3/24/99	2.8	3/24/99	0.9	3/24/99	2.3	3/24/99	6.5	3/24/99	3.3	3/24/99	2.4
3/25/99	2.5	3/25/99	1.0	3/25/99	2.7	3/25/99	8.2	3/25/99	3.0	3/25/99	3.1
3/26/99	2.4	3/26/99	0.9	3/26/99	2.7	3/26/99	8.5	3/26/99	1.7	3/26/99	2.6
3/27/99	2.3	3/27/99	1.1	3/27/99	2.7	3/27/99	7.1	3/27/99	1.9	3/27/99	2.2
3/28/99	1.9	3/28/99	0.7	3/28/99	2.7	3/28/99	10.1	3/28/99	2.0	3/28/99	1.8
3/29/99	2.0	3/29/99	0.7	3/29/99	2.9	3/29/99	16.5	3/29/99	2.6	3/29/99	2.2
3/30/99	2.0	3/30/99	0.7	3/30/99	2.8	3/30/99	15.8	3/30/99	2.0	3/30/99	1.8
3/31/99	1.6	3/31/99	0.8	3/31/99	3.4	3/31/99	5.8	3/31/99	1.1	3/31/99	1.7
4/1/99	1.9	4/1/99	0.6	4/1/99	3.8	4/1/99	6.9	4/1/99	2.9	4/1/99	2.2
4/2/99	2.1	4/2/99	0.6	4/2/99	3.8	4/2/99	3.4	4/2/99	2.0	4/2/99	1.8
4/3/99	1.8	4/3/99	0.9	4/3/99	3.8	4/3/99	4.3	4/3/99	2.1	4/3/99	1.9
4/4/99	2.1	4/4/99	0.6	4/4/99	4.1	4/4/99	4.7	4/4/99	1.7	4/4/99	2.0
4/5/99	2.5	4/5/99	0.8	4/5/99	4.1	4/5/99	4.0	4/5/99	1.3	4/5/99	2.2
4/6/99	2.5	4/6/99	1.2	4/6/99	6.2	4/6/99	5.3	4/6/99	1.6	4/6/99	1.7
4/7/99	2.2	4/7/99	0.6	4/7/99	4.9	4/7/99	6.6	4/7/99	1.0	4/7/99	2.3
4/8/99	1.5	4/8/99	0.4	4/8/99	4.5	4/8/99	6.3	4/8/99	2.4	4/8/99	1.4
4/9/99	2.0	4/9/99	0.6	4/9/99	5.4	4/9/99	10.5	4/9/99	0.8	4/9/99	2.6
4/10/99	1.4	4/10/99	0.5	4/10/99	3.1	4/10/99	6.1	4/10/99	0.9	4/10/99	1.4
4/11/99	1.9	4/11/99	0.8	4/11/99	5.4	4/11/99	5.7	4/11/99	1.6	4/11/99	2.4
4/12/99	2.5	4/12/99	0.8	4/12/99	4.1	4/12/99	4.9	4/12/99	2.3	4/12/99	2.2
4/13/99	2.3	4/13/99	1.2	4/13/99	1.8	4/13/99	6.1	4/13/99	3.0	4/13/99	2.0
4/14/99	2.3	4/14/99	1.1	4/14/99	1.5	4/14/99	5.9	4/14/99	4.6	4/14/99	3.1
4/15/99	2.3	4/15/99	0.8	4/15/99	1.1	4/15/99	12.7	4/15/99	2.1	4/15/99	2.3
4/16/99	2.4	4/16/99	1.0	4/16/99	1.2	4/16/99	22.2	4/16/99	1.8	4/16/99	2.8
4/17/99	2.8	4/17/99	1.0	4/17/99	1.2	4/17/99	18.1	4/17/99	2.7	4/17/99	2.8
4/18/99	3.0	4/18/99	1.2	4/18/99	0.8	4/18/99	7.5	4/18/99	2.7	4/18/99	2.2
4/19/99	2.6	4/19/99	1.2	4/19/99	1.2	4/19/99	6.0	4/19/99	1.8	4/19/99	3.3
4/20/99	2.7	4/20/99	0.9	4/20/99	0.7	4/20/99	5.4	4/20/99	1.6	4/20/99	1.4
4/21/99	2.8	4/21/99	0.9	4/21/99	0.8	4/21/99	7.1	4/21/99	1.4	4/21/99	2.2
4/22/99	1.8	4/22/99	0.8	4/22/99	0.7	4/22/99	5.6	4/22/99	0.8	4/22/99	1.8
4/23/99	2.1	4/23/99	0.6	4/23/99	0.8	4/23/99	7.9	4/23/99	1.8	4/23/99	1.4
4/24/99	2.4	4/24/99	0.9	4/24/99	0.5	4/24/99	8.0	4/24/99	1.4	4/24/99	1.5
4/25/99	2.1	4/25/99	0.9	4/25/99	0.8	4/25/99	8.1	4/25/99	0.7	4/25/99	1.5
4/26/99	2.0	4/26/99	0.7	4/26/99	0.6	4/26/99	10.4	4/26/99	3.1	4/26/99	1.7
4/27/99	1.6	4/27/99	0.6	4/27/99	0.6	4/27/99	7.5	4/27/99	3.4	4/27/99	1.4
4/28/99	1.6	4/28/99	0.6	4/28/99	0.8	4/28/99	8.0	4/28/99	1.9	4/28/99	1.9
4/29/99	1.8	4/29/99	0.7	4/29/99	0.6	4/29/99	9.4	4/29/99	1.7	4/29/99	1.5
4/30/99	1.5	4/30/99	0.5	4/30/99	0.5	4/30/99	10.0	4/30/99	2.5	4/30/99	4.0
5/1/99	1.7	5/1/99	0.7	5/1/99	0.5	5/1/99	8.4	5/1/99	2.3	5/1/99	9.3
5/2/99	1.7	5/2/99	0.5	5/2/99	0.4	5/2/99	9.7	5/2/99	1.7	5/2/99	3.6
5/3/99	1.8	5/3/99	0.6	5/3/99	0.5	5/3/99	8.1	5/3/99	1.1	5/3/99	3.6
5/4/99	1.5	5/4/99	0.7	5/4/99	0.5	5/4/99	10.4	5/4/99	0.6	5/4/99	4.9
5/5/99	1.7	5/5/99	0.6	5/5/99	0.4	5/5/99	3.8	5/5/99	1.7	5/5/99	2.4
5/6/99	1.9	5/6/99	0.9	5/6/99	0.3	5/6/99	4.1	5/6/99	1.6	5/6/99	2.0
5/7/99	1.8	5/7/99	0.7	5/7/99	0.5	5/7/99	8.9	5/7/99	1.4	5/7/99	2.3
5/8/99	2.0	5/8/99	0.6	5/8/99	0.9	5/8/99	7.3	5/8/99	2.5	5/8/99	1.9

C-1. USS CLAIRTON OPACITY -- DAILY AVERAGES (continued)

Battery 13		Battery 14		Battery 15		Battery 19		Battery 20		Battery B	
Date	Opacity	Date	Opacity	Date	Opacity	Date	Opacity	Date	Opacity	Date	Opacity
5/9/99	2.2	5/9/99	0.8	5/9/99	0.5	5/9/99	6.5	5/9/99	1.9	5/9/99	1.7
5/10/99	2.1	5/10/99	0.9	5/10/99	0.4	5/10/99	6.4	5/10/99	1.2	5/10/99	1.2
5/11/99	1.6	5/11/99	0.6	5/11/99	0.4	5/11/99	7.9	5/11/99	1.6	5/11/99	3.3
5/12/99	1.5	5/12/99	0.5	5/12/99	0.8	5/12/99	7.4	5/12/99	1.5	5/12/99	2.4
5/13/99	2.1	5/13/99	0.7	5/13/99	0.5	5/13/99	6.6	5/13/99	1.4	5/13/99	3.6
5/14/99	2.2	5/14/99	0.7	5/14/99	0.8	5/14/99	7.0	5/14/99	1.7	5/14/99	2.6
5/15/99	2.1	5/15/99	0.6	5/15/99	0.9	5/15/99	8.1	5/15/99	1.6	5/15/99	2.5
5/16/99	1.9	5/16/99	0.7	5/16/99	0.4	5/16/99	6.3	5/16/99	0.8	5/16/99	2.6
5/17/99	1.8	5/17/99	0.6	5/17/99	0.7	5/17/99	6.5	5/17/99	0.7	5/17/99	1.2
5/18/99	2.0	5/18/99	0.7	5/18/99	0.6	5/18/99	6.4	5/18/99	1.7	5/18/99	2.6
5/19/99	2.4	5/19/99	0.8	5/19/99	0.7	5/19/99	5.8	5/19/99	0.9	5/19/99	2.6
5/20/99	2.3	5/20/99	0.7	5/20/99	0.7	5/20/99	5.7	5/20/99	1.6	5/20/99	0.7
5/21/99	2.1	5/21/99	0.8	5/21/99	0.5	5/21/99	7.5	5/21/99	1.4	5/21/99	1.2
5/22/99	1.0	5/22/99	13.6	5/22/99	0.7	5/22/99	6.8	5/22/99	1.0	5/22/99	2.4
5/23/99	1.9	5/23/99	0.0	5/23/99	1.0	5/23/99	6.0	5/23/99	0.7	5/23/99	1.5
5/24/99	1.4	5/24/99	0.2	5/24/99	0.7	5/24/99	19.4	5/24/99	0.8	5/24/99	2.0
5/25/99	2.3	5/25/99	0.2	5/25/99	1.1	5/25/99	21.7	5/25/99	1.2	5/25/99	2.8
5/26/99	2.4	5/26/99	0.1	5/26/99	0.9	5/26/99	6.2	5/26/99	2.1	5/26/99	1.9
5/27/99	1.3	5/27/99	0.4	5/27/99	0.4	5/27/99	5.7	5/27/99	2.2	5/27/99	1.4
5/28/99	0.6	5/28/99	0.2	5/28/99	0.5	5/28/99	5.2	5/28/99	1.7	5/28/99	1.0
5/29/99	0.3	5/29/99	0.3	5/29/99	0.5	5/29/99	5.2	5/29/99	1.8	5/29/99	2.3
5/30/99	0.4	5/30/99	0.3	5/30/99	0.9	5/30/99	4.7	5/30/99	2.1	5/30/99	1.6
5/31/99	0.2	5/31/99	0.2	5/31/99	0.5	5/31/99	8.9	5/31/99	3.7	5/31/99	0.9
6/1/99	0.5	6/1/99	0.4	6/1/99	1.5	6/1/99	4.7	6/1/99	5.4	6/1/99	0.7
6/2/99	1.2	6/2/99	0.8	6/2/99	1.3	6/2/99	8.4	6/2/99	8.1	6/2/99	1.4
6/3/99	0.4	6/3/99	0.7	6/3/99	1.0	6/3/99	10.9	6/3/99	2.0	6/3/99	2.6
6/4/99	0.4	6/4/99	0.3	6/4/99	0.5	6/4/99	7.7	6/4/99	1.4	6/4/99	2.1
6/5/99	0.2	6/5/99	0.3	6/5/99	0.5	6/5/99	6.1	6/5/99	1.2	6/5/99	1.7
6/6/99	0.1	6/6/99	0.1	6/6/99	1.0	6/6/99	6.3	6/6/99	1.2	6/6/99	1.2
6/7/99	0.4	6/7/99	0.1	6/7/99	0.4	6/7/99	5.3	6/7/99	1.3	6/7/99	1.8
6/8/99	0.3	6/8/99	0.5	6/8/99	0.6	6/8/99	4.5	6/8/99	4.2	6/8/99	1.7
6/9/99	0.4	6/9/99	0.5	6/9/99	1.0	6/9/99	3.4	6/9/99	3.5	6/9/99	1.2
6/10/99	0.4	6/10/99	0.1	6/10/99	0.6	6/10/99	5.0	6/10/99	7.0	6/10/99	1.3
6/11/99	0.3	6/11/99	0.1	6/11/99	0.3	6/11/99	3.2	6/11/99	2.2	6/11/99	2.0
6/12/99	0.1	6/12/99	0.2	6/12/99	0.6	6/12/99	3.2	6/12/99	1.8	6/12/99	1.8
6/13/99	0.1	6/13/99	0.1	6/13/99	0.7	6/13/99	2.8	6/13/99	2.2	6/13/99	1.2
6/14/99	0.2	6/14/99	0.1	6/14/99	0.5	6/14/99	3.1	6/14/99	1.5	6/14/99	0.9
6/15/99	0.3	6/15/99	0.3	6/15/99	0.8	6/15/99	3.8	6/15/99	1.5	6/15/99	1.3
6/16/99	0.3	6/16/99	0.3	6/16/99	1.0	6/16/99	3.0	6/16/99	2.6	6/16/99	1.7
6/17/99	0.2	6/17/99	0.4	6/17/99	1.1	6/17/99	3.2	6/17/99	1.2	6/17/99	2.2
6/18/99	0.6	6/18/99	0.3	6/18/99	0.7	6/18/99	3.7	6/18/99	1.3	6/18/99	3.7
6/19/99	0.5	6/19/99	0.3	6/19/99	1.2	6/19/99	8.8	6/19/99	0.9	6/19/99	2.1
6/20/99	0.3	6/20/99	0.4	6/20/99	0.7	6/20/99	3.8	6/20/99	0.8	6/20/99	1.9
6/21/99	0.1	6/21/99	0.3	6/21/99	0.8	6/21/99	3.3	6/21/99	0.7	6/21/99	1.6
6/22/99	0.2	6/22/99	0.2	6/22/99	0.8	6/22/99	4.7	6/22/99	1.2	6/22/99	2.5
6/23/99	0.2	6/23/99	0.2	6/23/99	0.8	6/23/99	2.8	6/23/99	1.3	6/23/99	2.4

C-1. USS CLAIRTON OPACITY -- DAILY AVERAGES (continued)

Battery 13		Battery 14		Battery 15		Battery 19		Battery 20		Battery B	
Date	Opacity	Date	Opacity	Date	Opacity	Date	Opacity	Date	Opacity	Date	Opacity
6/24/99	0.2	6/24/99	0.1	6/24/99	0.6	6/24/99	5.6	6/24/99	0.7	6/24/99	2.8
6/25/99	0.0	6/25/99	0.4	6/25/99	1.6	6/25/99	6.0	6/25/99	2.9	6/25/99	4.1
6/26/99	0.2	6/26/99	0.1	6/26/99	0.4	6/26/99	4.5	6/26/99	0.8	6/26/99	3.5
6/27/99	0.5	6/27/99	0.4	6/27/99	0.8	6/27/99	3.4	6/27/99	0.6	6/27/99	4.0
6/28/99	0.2	6/28/99	0.4	6/28/99	0.5	6/28/99	3.7	6/28/99	1.9	6/28/99	2.0
6/29/99	0.4	6/29/99	0.1	6/29/99	0.4	6/29/99	4.1	6/29/99	0.6	6/29/99	2.2
6/30/99	0.2	6/30/99	0.5	6/30/99	0.9	6/30/99	3.1	6/30/99	0.9	6/30/99	2.2
7/1/99	0.1	7/1/99	0.4	7/1/99	0.8	7/1/99	6.1	7/1/99	1.1	7/1/99	2.4
7/2/99	0.1	7/2/99	0.2	7/2/99	0.2	7/2/99	9.0	7/2/99	0.7	7/2/99	7.4
7/3/99	0.1	7/3/99	0.2	7/3/99	0.3	7/3/99	7.9	7/3/99	1.3	7/3/99	4.0
7/4/99	0.0	7/4/99	0.1	7/4/99	0.3	7/4/99	11.3	7/4/99	0.9	7/4/99	3.5
7/5/99	0.1	7/5/99	0.0	7/5/99	0.3	7/5/99	6.5	7/5/99	1.3	7/5/99	2.9
7/6/99	0.1	7/6/99	0.2	7/6/99	0.4	7/6/99	14.8	7/6/99	1.1	7/6/99	1.8
7/7/99	0.1	7/7/99	0.2	7/7/99	0.5	7/7/99	7.2	7/7/99	1.2	7/7/99	1.9
7/8/99	0.2	7/8/99	0.3	7/8/99	0.5	7/8/99	8.7	7/8/99	1.7	7/8/99	2.3
7/9/99	0.3	7/9/99	0.2	7/9/99	1.4	7/9/99	15.9	7/9/99	2.7	7/9/99	2.3
7/10/99	0.1	7/10/99	0.1	7/10/99	0.8	7/10/99	6.3	7/10/99	1.1	7/10/99	2.1
7/11/99	0.3	7/11/99	0.0	7/11/99	0.6	7/11/99	4.2	7/11/99	1.3	7/11/99	3.0
7/12/99	1.1	7/12/99	0.2	7/12/99	0.9	7/12/99	8.9	7/12/99	1.4	7/12/99	1.4
7/13/99	0.6	7/13/99	0.3	7/13/99	0.4	7/13/99	7.2	7/13/99	1.7	7/13/99	1.9
7/14/99	0.1	7/14/99	0.2	7/14/99	0.4	7/14/99	4.6	7/14/99	1.5	7/14/99	2.1
7/15/99	0.2	7/15/99	0.1	7/15/99	0.5	7/15/99	4.0	7/15/99	1.5	7/15/99	5.6
7/16/99	0.1	7/16/99	0.3	7/16/99	0.2	7/16/99	3.5	7/16/99	2.4	7/16/99	5.7
7/17/99	0.2	7/17/99	0.4	7/17/99	0.5	7/17/99	3.7	7/17/99	1.7	7/17/99	3.2
7/18/99	0.3	7/18/99	0.1	7/18/99	0.7	7/18/99	2.9	7/18/99	1.8	7/18/99	3.1
7/19/99	0.0	7/19/99	0.2	7/19/99	0.2	7/19/99	4.8	7/19/99	1.2	7/19/99	2.3
7/20/99	0.0	7/20/99	0.3	7/20/99	0.5	7/20/99	4.2	7/20/99	2.6	7/20/99	3.6
7/21/99	0.3	7/21/99	0.4	7/21/99	0.7	7/21/99	4.3	7/21/99	2.2	7/21/99	3.0
7/22/99	0.1	7/22/99	0.1	7/22/99	1.1	7/22/99	3.8	7/22/99	1.3	7/22/99	2.4
7/23/99	0.2	7/23/99	0.3	7/23/99	1.3	7/23/99	3.7	7/23/99	1.2	7/23/99	2.2
7/24/99	0.2	7/24/99	0.5	7/24/99	1.2	7/24/99	3.1	7/24/99	1.6	7/24/99	3.0
7/25/99	0.2	7/25/99	0.4	7/25/99	1.0	7/25/99	4.2	7/25/99	1.3	7/25/99	3.8
7/26/99	0.1	7/26/99	0.3	7/26/99	0.6	7/26/99	9.8	7/26/99	1.2	7/26/99	2.7
7/27/99	0.0	7/27/99	0.4	7/27/99	0.6	7/27/99	6.7	7/27/99	1.4	7/27/99	2.2
7/28/99	0.8	7/28/99	0.5	7/28/99	4.6	7/28/99	11.3	7/28/99	2.9	7/28/99	4.2
7/29/99	0.4	7/29/99	0.3	7/29/99	0.5	7/29/99	11.3	7/29/99	5.8	7/29/99	0.6
7/30/99	0.2	7/30/99	0.4	7/30/99	1.5	7/30/99	6.7	7/30/99	0.8	7/30/99	0.0
7/31/99	0.3	7/31/99	0.5	7/31/99	1.2	7/31/99	5.2	7/31/99	1.3	7/31/99	0.0
8/1/99	0.2	8/1/99	0.3	8/1/99	1.4	8/1/99	7.9	8/1/99	0.4	8/1/99	0.1
8/2/99	0.1	8/2/99	0.6	8/2/99	1.5	8/2/99	5.2	8/2/99	1.0	8/2/99	0.2
8/3/99	0.2	8/3/99	0.9	8/3/99	0.9	8/3/99	6.0	8/3/99	1.0	8/3/99	0.2
8/4/99	0.6	8/4/99	1.2	8/4/99	2.3	8/4/99	8.7	8/4/99	0.7	8/4/99	0.2
8/5/99	0.5	8/5/99	1.2	8/5/99	3.2	8/5/99	2.5	8/5/99	0.7	8/5/99	0.2
8/6/99	0.7	8/6/99	0.7	8/6/99	1.5	8/6/99	2.4	8/6/99	1.5	8/6/99	0.2
8/7/99	0.6	8/7/99	1.0	8/7/99	2.4	8/7/99	3.3	8/7/99	1.1	8/7/99	0.2
8/8/99	1.4	8/8/99	0.8	8/8/99	2.5	8/8/99	2.7	8/8/99	1.4	8/8/99	0.3

C-1. USS CLAIRTON OPACITY -- DAILY AVERAGES (continued)

Battery 13		Battery 14		Battery 15		Battery 19		Battery 20		Battery B	
Date	Opacity	Date	Opacity	Date	Opacity	Date	Opacity	Date	Opacity	Date	Opacity
8/9/99	0.3	8/9/99	0.6	8/9/99	2.0	8/9/99	4.0	8/9/99	1.3	8/9/99	0.3
8/10/99	0.4	8/10/99	0.2	8/10/99	1.5	8/10/99	7.9	8/10/99	3.3	8/10/99	0.3
8/11/99	0.7	8/11/99	0.8	8/11/99	2.5	8/11/99	14.8	8/11/99	2.0	8/11/99	0.2
8/12/99	0.5	8/12/99	0.7	8/12/99	2.6	8/12/99	18.5	8/12/99	1.8	8/12/99	0.2
8/13/99	1.0	8/13/99	1.0	8/13/99	2.3	8/13/99	9.2	8/13/99	1.2	8/13/99	0.2
8/14/99	1.2	8/14/99	1.6	8/14/99	4.4	8/14/99	22.8	8/14/99	3.2	8/14/99	0.3
8/15/99	0.3	8/15/99	0.4	8/15/99	1.8	8/15/99	19.7	8/15/99	1.2	8/15/99	0.4
8/16/99	0.5	8/16/99	0.5	8/16/99	1.2	8/16/99	11.1	8/16/99	1.6	8/16/99	0.3
8/17/99	0.7	8/17/99	0.8	8/17/99	1.2	8/17/99	8.2	8/17/99	1.1	8/17/99	0.2
8/18/99	0.2	8/18/99	0.7	8/18/99	2.4	8/18/99	10.2	8/18/99	1.1	8/18/99	0.2
8/19/99	0.3	8/19/99	0.5	8/19/99	1.2	8/19/99	8.9	8/19/99	1.4	8/19/99	0.3
8/20/99	0.5	8/20/99	0.8	8/20/99	1.1	8/20/99	4.6	8/20/99	1.1	8/20/99	0.3
8/21/99	0.1	8/21/99	0.4	8/21/99	0.6	8/21/99	5.3	8/21/99	1.4	8/21/99	0.4
8/22/99	0.1	8/22/99	0.1	8/22/99	1.1	8/22/99	5.1	8/22/99	1.4	8/22/99	0.3
8/23/99	0.1	8/23/99	0.1	8/23/99	0.7	8/23/99	6.0	8/23/99	1.2	8/23/99	0.2
8/24/99	0.3	8/24/99	0.1	8/24/99	1.0	8/24/99	4.7	8/24/99	10.6	8/24/99	0.3
8/25/99	0.1	8/25/99	0.5	8/25/99	0.8	8/25/99	4.4	8/25/99	0.6	8/25/99	0.4
8/26/99	0.1	8/26/99	0.2	8/26/99	0.7	8/26/99	2.9	8/26/99	0.7	8/26/99	26.3
8/27/99	0.1	8/27/99	0.2	8/27/99	0.7	8/27/99	6.3	8/27/99	0.8	8/27/99	41.4
8/28/99	0.1	8/28/99	0.0	8/28/99	0.6	8/28/99	5.7	8/28/99	1.3	8/28/99	38.9
8/29/99	0.1	8/29/99	0.0	8/29/99	0.7	8/29/99	5.0	8/29/99	1.7	8/29/99	44.1
8/30/99	0.0	8/30/99	0.1	8/30/99	0.3	8/30/99	4.9	8/30/99	1.7	8/30/99	33.8
8/31/99	0.0	8/31/99	0.1	8/31/99	0.5	8/31/99	5.1	8/31/99	1.9	8/31/99	20.2
9/1/99	0.1	9/1/99	0.0	9/1/99	0.6	9/1/99	8.5	9/1/99	1.2	9/1/99	15.8
9/2/99	0.2	9/2/99	0.1	9/2/99	0.8	9/2/99	10.0	9/2/99	1.1	9/2/99	27.7
9/3/99	0.0	9/3/99	0.3	9/3/99	0.6	9/3/99	9.6	9/3/99	1.5	9/3/99	27.0
9/4/99	0.1	9/4/99	0.1	9/4/99	0.3	9/4/99	9.0	9/4/99	2.5	9/4/99	18.6
9/5/99	0.2	9/5/99	0.2	9/5/99	0.7	9/5/99	10.3	9/5/99	1.6	9/5/99	15.6
9/6/99	0.1	9/6/99	0.2	9/6/99	1.0	9/6/99	9.1	9/6/99	1.7	9/6/99	8.6
9/7/99	0.4	9/7/99	0.1	9/7/99	1.2	9/7/99	9.6	9/7/99	0.9	9/7/99	7.4
9/8/99	0.6	9/8/99	0.5	9/8/99	1.7	9/8/99	8.8	9/8/99	1.5	9/8/99	6.8
9/9/99	0.7	9/9/99	0.4	9/9/99	2.0	9/9/99	9.0	9/9/99	0.9	9/9/99	4.5
9/10/99	0.6	9/10/99	0.5	9/10/99	2.3	9/10/99	8.5	9/10/99	1.2	9/10/99	4.6
9/11/99	0.2	9/11/99	0.3	9/11/99	1.1	9/11/99	9.3	9/11/99	7.2	9/11/99	3.8
9/12/99	0.1	9/12/99	0.3	9/12/99	1.1	9/12/99	8.7	9/12/99	2.8	9/12/99	3.0
9/13/99	0.3	9/13/99	0.2	9/13/99	1.7	9/13/99	9.4	9/13/99	1.0	9/13/99	2.8
9/14/99	0.3	9/14/99	0.3	9/14/99	1.1	9/14/99	9.3	9/14/99	4.2	9/14/99	1.8
9/15/99	0.1	9/15/99	0.2	9/15/99	1.3	9/15/99	9.3	9/15/99	7.3	9/15/99	2.2
9/16/99	0.2	9/16/99	0.1	9/16/99	0.7	9/16/99	7.8	9/16/99	1.9	9/16/99	2.9
9/17/99	0.1	9/17/99	0.2	9/17/99	1.4	9/17/99	5.4	9/17/99	2.3	9/17/99	2.0
9/18/99	0.2	9/18/99	4.5	9/18/99	2.5	9/18/99	3.2	9/18/99	1.8	9/18/99	2.9
9/19/99	0.9	9/19/99	0.1	9/19/99	1.8	9/19/99	2.3	9/19/99	1.5	9/19/99	2.6
9/20/99	0.3	9/20/99	0.4	9/20/99	1.8	9/20/99	1.9	9/20/99	0.8	9/20/99	1.8
9/21/99	0.4	9/21/99	0.1	9/21/99	1.4	9/21/99	1.8	9/21/99	1.6	9/21/99	1.9
9/22/99	0.5	9/22/99	0.1	9/22/99	1.6	9/22/99	2.5	9/22/99	1.5	9/22/99	2.5
9/23/99	0.6	9/23/99	0.4	9/23/99	1.2	9/23/99	2.1	9/23/99	1.6	9/23/99	2.4

C-1. USS CLAIRTON OPACITY -- DAILY AVERAGES (continued)

Battery 13		Battery 14		Battery 15		Battery 19		Battery 20		Battery B	
Date	Opacity	Date	Opacity	Date	Opacity	Date	Opacity	Date	Opacity	Date	Opacity
9/24/99	0.2	9/24/99	0.2	9/24/99	1.8	9/24/99	2.9	9/24/99	2.4	9/24/99	2.3
9/25/99	0.2	9/25/99	0.1	9/25/99	2.5	9/25/99	2.6	9/25/99	1.3	9/25/99	2.4
9/26/99	0.3	9/26/99	0.4	9/26/99	2.6	9/26/99	1.7	9/26/99	0.9	9/26/99	1.7
9/27/99	0.3	9/27/99	0.3	9/27/99	2.6	9/27/99	2.2	9/27/99	1.0	9/27/99	1.3
9/28/99	0.2	9/28/99	0.4	9/28/99	1.8	9/28/99	2.7	9/28/99	1.9	9/28/99	1.6
9/29/99	0.7	9/29/99	0.1	9/29/99	1.5	9/29/99	3.1	9/29/99	2.1	9/29/99	1.4
9/30/99	0.8	9/30/99	0.3	9/30/99	2.4	9/30/99	4.4	9/30/99	1.4	9/30/99	1.7
10/1/99	1.0	10/1/99	0.4	10/1/99	2.1	10/1/99	5.1	10/1/99	1.7	10/1/99	2.4
10/2/99	0.6	10/2/99	0.3	10/2/99	3.1	10/2/99	5.1	10/2/99	2.0	10/2/99	1.3
10/3/99	0.3	10/3/99	0.2	10/3/99	3.6	10/3/99	4.7	10/3/99	1.7	10/3/99	1.5
10/4/99	0.7	10/4/99	0.2	10/4/99	3.0	10/4/99	6.2	10/4/99	3.5	10/4/99	2.7
10/5/99	1.1	10/5/99	0.1	10/5/99	0.6	10/5/99	5.4	10/5/99	2.4	10/5/99	1.1
10/6/99	0.7	10/6/99	0.3	10/6/99	1.6	10/6/99	5.5	10/6/99	2.9	10/6/99	2.1
10/7/99	0.9	10/7/99	0.3	10/7/99	1.9	10/7/99	4.9	10/7/99	3.4	10/7/99	2.3
10/8/99	0.7	10/8/99	0.2	10/8/99	2.5	10/8/99	5.1	10/8/99	3.6	10/8/99	2.0
10/9/99	0.7	10/9/99	0.1	10/9/99	2.7	10/9/99	6.2	10/9/99	3.3	10/9/99	2.1
10/10/99	0.8	10/10/99	0.1	10/10/99	3.3	10/10/99	7.0	10/10/99	4.2	10/10/99	1.9
10/11/99	0.8	10/11/99	0.0	10/11/99	2.3	10/11/99	7.4	10/11/99	4.9	10/11/99	2.1
10/12/99	1.3	10/12/99	0.1	10/12/99	1.3	10/12/99	5.6	10/12/99	2.8	10/12/99	1.1
10/13/99	1.1	10/13/99	0.2	10/13/99	2.8	10/13/99	4.1	10/13/99	2.9	10/13/99	1.4
10/14/99	1.5	10/14/99	0.1	10/14/99	3.0	10/14/99	6.0	10/14/99	3.1	10/14/99	1.0
10/15/99	0.9	10/15/99	0.9	10/15/99	1.9	10/15/99	4.3	10/15/99	3.5	10/15/99	1.5
10/16/99	0.4	10/16/99	0.2	10/16/99	1.5	10/16/99	7.1	10/16/99	2.7	10/16/99	0.9
10/17/99	0.5	10/17/99	0.1	10/17/99	1.5	10/17/99	10.2	10/17/99	2.7	10/17/99	1.3
10/18/99	1.2	10/18/99	0.6	10/18/99	2.7	10/18/99	4.5	10/18/99	3.5	10/18/99	1.3
10/19/99	1.5	10/19/99	0.3	10/19/99	3.1	10/19/99	3.5	10/19/99	2.6	10/19/99	1.1
10/20/99	1.4	10/20/99	0.2	10/20/99	2.0	10/20/99	3.3	10/20/99	1.6	10/20/99	1.5
10/21/99	1.6	10/21/99	0.1	10/21/99	2.4	10/21/99	3.3	10/21/99	5.4	10/21/99	1.1
10/22/99	1.6	10/22/99	0.1	10/22/99	2.6	10/22/99	3.7	10/22/99	2.3	10/22/99	1.3
10/23/99	2.4	10/23/99	0.1	10/23/99	3.3	10/23/99	4.8	10/23/99	5.6	10/23/99	3.3
10/24/99	2.6	10/24/99	0.4	10/24/99	2.5	10/24/99	3.6	10/24/99	4.6	10/24/99	4.1
10/25/99	2.6	10/25/99	0.2	10/25/99	2.6	10/25/99	3.7	10/25/99	3.8	10/25/99	2.3
10/26/99	2.5	10/26/99	0.0	10/26/99	1.9	10/26/99	4.6	10/26/99	3.4	10/26/99	1.2
10/27/99	2.9	10/27/99	0.1	10/27/99	1.3	10/27/99	1.8	10/27/99	6.1	10/27/99	0.8
10/28/99	2.4	10/28/99	0.3	10/28/99	0.9	10/28/99	1.5	10/28/99	6.1	10/28/99	1.5
10/29/99	0.1	10/29/99	0.0	10/29/99	0.7	10/29/99	1.5	10/29/99	4.9	10/29/99	2.1
10/30/99	0.0	10/30/99	0.0	10/30/99	0.4	10/30/99	1.3	10/30/99	4.0	10/30/99	0.9
10/31/99	0.0	10/31/99	0.1	10/31/99	0.5	10/31/99	1.6	10/31/99	3.8	10/31/99	1.6
11/1/99	0.4	11/1/99	0.1	11/1/99	0.4	11/1/99	1.8	11/1/99	3.3	11/1/99	1.1
11/2/99	0.3	11/2/99	0.1	11/2/99	0.3	11/2/99	3.0	11/2/99	2.8	11/2/99	1.6
11/3/99	0.9	11/3/99	0.7	11/3/99	1.0	11/3/99	3.3	11/3/99	4.2	11/3/99	2.1
11/4/99	0.9	11/4/99	0.8	11/4/99	1.2	11/4/99	3.9	11/4/99	5.6	11/4/99	1.7
11/5/99	0.4	11/5/99	0.1	11/5/99	0.4	11/5/99	4.7	11/5/99	5.6	11/5/99	1.2
11/6/99	0.0	11/6/99	0.1	11/6/99	0.2	11/6/99	2.1	11/6/99	3.7	11/6/99	1.0
11/7/99	0.4	11/7/99	0.1	11/7/99	0.4	11/7/99	3.1	11/7/99	2.8	11/7/99	2.0
11/8/99	0.7	11/8/99	0.2	11/8/99	0.7	11/8/99	2.3	11/8/99	4.7	11/8/99	2.1

C-1. USS CLAIRTON OPACITY -- DAILY AVERAGES (continued)

Battery 13		Battery 14		Battery 15		Battery 19		Battery 20		Battery B	
Date	Opacity	Date	Opacity	Date	Opacity	Date	Opacity	Date	Opacity	Date	Opacity
11/9/99	0.3	11/9/99	0.2	11/9/99	0.6	11/9/99	3.3	11/9/99	4.5	11/9/99	1.5
11/10/99	0.2	11/10/99	0.0	11/10/99	0.8	11/10/99	2.3	11/10/99	4.5	11/10/99	2.5
11/11/99	0.8	11/11/99	0.2	11/11/99	0.5	11/11/99	4.0	11/11/99	7.2	11/11/99	1.7
11/12/99	1.1	11/12/99	0.1	11/12/99	0.8	11/12/99	4.3	11/12/99	3.3	11/12/99	0.8
11/13/99	1.5	11/13/99	0.4	11/13/99	0.7	11/13/99	2.9	11/13/99	4.8	11/13/99	2.4
11/14/99	1.1	11/14/99	0.2	11/14/99	0.5	11/14/99	4.0	11/14/99	4.2	11/14/99	2.6
11/15/99	1.7	11/15/99	0.1	11/15/99	0.4	11/15/99	8.5	11/15/99	4.3	11/15/99	1.4
11/16/99	2.2	11/16/99	0.4	11/16/99	0.9	11/16/99	2.2	11/16/99	3.5	11/16/99	2.9
11/17/99	2.9	11/17/99	0.2	11/17/99	0.4	11/17/99	2.7	11/17/99	6.9	11/17/99	3.5
11/18/99	1.9	11/18/99	0.2	11/18/99	0.8	11/18/99	3.3	11/18/99	4.5	11/18/99	1.9
11/19/99	0.1	11/19/99	0.2	11/19/99	0.3	11/19/99	1.9	11/19/99	4.1	11/19/99	2.1
11/20/99	0.0	11/20/99	0.0	11/20/99	0.5	11/20/99	3.7	11/20/99	6.9	11/20/99	2.4
11/21/99	0.0	11/21/99	0.2	11/21/99	0.2	11/21/99	3.7	11/21/99	6.3	11/21/99	2.0
11/22/99	0.1	11/22/99	0.0	11/22/99	0.3	11/22/99	3.7	11/22/99	4.8	11/22/99	2.2
11/23/99	0.1	11/23/99	0.3	11/23/99	0.2	11/23/99	5.8	11/23/99	3.3	11/23/99	1.9
11/24/99	0.0	11/24/99	0.2	11/24/99	0.4	11/24/99	6.4	11/24/99	4.3	11/24/99	1.7
11/25/99	0.3	11/25/99	0.1	11/25/99	0.4	11/25/99	4.8	11/25/99	5.3	11/25/99	1.4
11/26/99	0.5	11/26/99	0.2	11/26/99	0.9	11/26/99	1.9	11/26/99	6.8	11/26/99	2.7
11/27/99	0.6	11/27/99	0.4	11/27/99	1.0	11/27/99	2.2	11/27/99	8.0	11/27/99	1.4
11/28/99	0.7	11/28/99	0.3	11/28/99	0.6	11/28/99	1.3	11/28/99	7.9	11/28/99	1.9
11/29/99	1.0	11/29/99	0.3	11/29/99	0.3	11/29/99	1.9	11/29/99	3.9	11/29/99	2.7
11/30/99	1.5	11/30/99	0.0	11/30/99	0.4	11/30/99	2.9	11/30/99	4.5	11/30/99	1.8
12/1/99	2.0	12/1/99	0.4	12/1/99	0.6	12/1/99	2.0	12/1/99	8.0	12/1/99	2.5
12/2/99	1.3	12/2/99	0.5	12/2/99	1.2	12/2/99	2.0	12/2/99	5.1	12/2/99	3.3
12/3/99	1.2	12/3/99	0.0	12/3/99	0.4	12/3/99	1.2	12/3/99	6.3	12/3/99	2.5
12/4/99	0.7	12/4/99	0.0	12/4/99	0.2	12/4/99	1.2	12/4/99	5.7	12/4/99	1.8
12/5/99	0.2	12/5/99	0.0	12/5/99	0.4	12/5/99	1.0	12/5/99	4.9	12/5/99	2.5
12/6/99	0.8	12/6/99	0.0	12/6/99	0.1	12/6/99	0.9	12/6/99	4.2	12/6/99	1.9
12/7/99	1.3	12/7/99	0.3	12/7/99	0.2	12/7/99	1.2	12/7/99	4.1	12/7/99	5.3
12/8/99	1.6	12/8/99	0.0	12/8/99	0.4	12/8/99	0.9	12/8/99	6.7	12/8/99	3.8
12/9/99	1.3	12/9/99	0.2	12/9/99	0.4	12/9/99	1.7	12/9/99	9.3	12/9/99	3.8
12/10/99	0.4	12/10/99	0.0	12/10/99	0.1	12/10/99	0.5	12/10/99	5.1	12/10/99	0.7
12/11/99	1.0	12/11/99	0.0	12/11/99	0.2	12/11/99	1.4	12/11/99	5.7	12/11/99	3.3
12/12/99	1.3	12/12/99	0.1	12/12/99	0.2	12/12/99	0.7	12/12/99	2.8	12/12/99	2.9
12/13/99	0.8	12/13/99	0.0	12/13/99	0.2	12/13/99	1.0	12/13/99	4.1	12/13/99	2.4
12/14/99	0.8	12/14/99	0.0	12/14/99	0.1	12/14/99	3.0	12/14/99	3.1	12/14/99	2.1
12/15/99	1.3	12/15/99	0.0	12/15/99	0.1	12/15/99	1.6	12/15/99	2.7	12/15/99	3.8
12/16/99	1.4	12/16/99	0.1	12/16/99	0.5	12/16/99	3.2	12/16/99	3.5	12/16/99	3.0
12/17/99	1.0	12/17/99	0.1	12/17/99	0.8	12/17/99	2.8	12/17/99	4.6	12/17/99	3.1
12/18/99	1.2	12/18/99	0.3	12/18/99	0.9	12/18/99	4.5	12/18/99	4.0	12/18/99	3.7
12/19/99	1.1	12/19/99	0.6	12/19/99	1.1	12/19/99	2.8	12/19/99	2.7	12/19/99	2.0
12/20/99	1.3	12/20/99	0.2	12/20/99	1.3	12/20/99	4.9	12/20/99	2.9	12/20/99	3.4
12/21/99	2.0	12/21/99	0.3	12/21/99	0.9	12/21/99	4.3	12/21/99	4.1	12/21/99	1.4
12/22/99	1.7	12/22/99	0.2	12/22/99	1.1	12/22/99	3.9	12/22/99	4.0	12/22/99	1.8
12/23/99	1.9	12/23/99	0.2	12/23/99	0.9	12/23/99	5.1	12/23/99	3.6	12/23/99	2.3
12/24/99	2.3	12/24/99	0.4	12/24/99	7.5	12/24/99	5.1	12/24/99	4.1	12/24/99	1.7

C-1. USS CLAIRTON OPACITY -- DAILY AVERAGES (continued)

Battery 13		Battery 14		Battery 15		Battery 19		Battery 20		Battery B	
Date	Opacity	Date	Opacity	Date	Opacity	Date	Opacity	Date	Opacity	Date	Opacity
12/25/99	3.4	12/25/99	0.7	12/25/99	1.2	12/25/99	5.7	12/25/99	3.9	12/25/99	2.7
12/26/99	2.3	12/26/99	0.2	12/26/99	1.3	12/26/99	12.0	12/26/99	4.1	12/26/99	2.6
12/27/99	2.9	12/27/99	0.1	12/27/99	1.1	12/27/99	12.4	12/27/99	6.4	12/27/99	2.1
12/28/99	4.5	12/28/99	0.2	12/28/99	1.1	12/28/99	10.1	12/28/99	4.8	12/28/99	1.8
12/29/99	3.5	12/29/99	1.1	12/29/99	2.5	12/29/99	42.6	12/29/99	6.5	12/29/99	2.0
12/30/99	2.3	12/30/99	1.0	12/30/99	1.2	12/30/99	35.9	12/30/99	8.7	12/30/99	2.5
12/31/99	0.9	12/31/99	0.5	12/31/99	1.3	12/31/99	12.6	12/31/99	6.7	12/31/99	1.4
1/1/00	1.2	1/1/00	0.3	1/1/00	0.8	1/1/00	17.1	1/1/00	5.4	1/1/00	1.5
1/2/00	0.5	1/2/00	0.3	1/2/00	1.4	1/2/00	23.6	1/2/00	5.3	1/2/00	2.3
1/3/00	0.7	1/3/00	0.3	1/3/00	0.6	1/3/00	13.2	1/3/00	3.4	1/3/00	0.8
1/4/00	0.9	1/4/00	0.1	1/4/00	0.6	1/4/00	8.8	1/4/00	4.0	1/4/00	2.2
1/5/00	0.7	1/5/00	0.3	1/5/00	1.1	1/5/00	8.8	1/5/00	4.5	1/5/00	2.3
1/6/00	0.8	1/6/00	0.5	1/6/00	0.9	1/6/00	7.1	1/6/00	3.8	1/6/00	2.7
1/7/00	0.3	1/7/00	0.2	1/7/00	10.1	1/7/00	4.6	1/7/00	1.7	1/7/00	0.6
1/8/00	0.6	1/8/00	0.3	1/8/00	0.5	1/8/00	6.6	1/8/00	3.5	1/8/00	1.5
1/9/00	0.7	1/9/00	0.4	1/9/00	0.5	1/9/00	5.9	1/9/00	4.7	1/9/00	2.0
1/10/00	0.6	1/10/00	0.2	1/10/00	0.4	1/10/00	8.1	1/10/00	4.8	1/10/00	2.6
1/11/00	0.6	1/11/00	0.3	1/11/00	0.4	1/11/00	7.8	1/11/00	8.0	1/11/00	1.2
1/12/00	0.9	1/12/00	0.9	1/12/00	0.7	1/12/00	7.8	1/12/00	5.8	1/12/00	2.7
1/13/00	0.7	1/13/00	0.6	1/13/00	0.7	1/13/00	6.4	1/13/00	6.9	1/13/00	2.3
1/14/00	2.0	1/14/00	0.8	1/14/00	1.1	1/14/00	5.9	1/14/00	8.8	1/14/00	2.5
1/15/00	1.3	1/15/00	0.5	1/15/00	1.3	1/15/00	4.9	1/15/00	6.4	1/15/00	2.9
1/16/00	1.2	1/16/00	0.9	1/16/00	1.3	1/16/00	6.5	1/16/00	8.7	1/16/00	2.3
1/17/00	2.4	1/17/00	0.8	1/17/00	1.0	1/17/00	4.0	1/17/00	7.9	1/17/00	3.2
1/18/00	2.0	1/18/00	0.9	1/18/00	2.3	1/18/00	6.1	1/18/00	6.4	1/18/00	3.2
1/19/00	1.6	1/19/00	0.5	1/19/00	2.3	1/19/00	5.6	1/19/00	5.0	1/19/00	3.9
1/20/00	2.0	1/20/00	0.4	1/20/00	0.7	1/20/00	3.6	1/20/00	4.6	1/20/00	2.9
1/21/00	2.1	1/21/00	0.3	1/21/00	0.5	1/21/00	2.6	1/21/00	8.3	1/21/00	4.3
1/22/00	7.0	1/22/00	0.8	1/22/00	0.8	1/22/00	4.5	1/22/00	8.2	1/22/00	6.3
1/23/00	0.7	1/23/00	0.2	1/23/00	0.7	1/23/00	11.5	1/23/00	8.8	1/23/00	3.7
1/24/00	0.9	1/24/00	0.2	1/24/00	0.5	1/24/00	4.1	1/24/00	6.7	1/24/00	3.6
1/25/00	0.4	1/25/00	0.4	1/25/00	2.8	1/25/00	4.7	1/25/00	5.4	1/25/00	3.5
1/26/00	1.3	1/26/00	0.5	1/26/00	1.6	1/26/00	14.7	1/26/00	7.3	1/26/00	4.4
1/27/00	1.1	1/27/00	1.5	1/27/00	0.9	1/27/00	13.7	1/27/00	7.6	1/27/00	4.4
1/28/00	1.8	1/28/00	1.3	1/28/00	1.3	1/28/00	5.0	1/28/00	6.9	1/28/00	4.3
1/29/00	2.5	1/29/00	0.0	1/29/00	1.5	1/29/00	4.6	1/29/00	7.8	1/29/00	3.2
1/30/00	0.4	1/30/00	0.2	1/30/00	0.5	1/30/00	3.8	1/30/00	7.2	1/30/00	4.0
1/31/00	0.4	1/31/00	0.3	1/31/00	1.0	1/31/00	2.3	1/31/00	6.1	1/31/00	2.7

C-2. DAILY AVERAGE OPACITY FOR BETHLEHEM, BURNS HARBOR BATTERY 1

Date	Opacity	Date	Opacity	Date	Opacity	Date	Opacity	Date	Opacity	Date	Opacity	Date	Opacity	Date	Opacity
8/1/93	26.5	1/1/94	5.6	1/1/95	5.9	1/1/96	8.4	1/1/97	4.8	1/8/98	7.3	1/10/99	7.4	1/11/00	0.3
8/2/93	24.9	1/2/94	2.7	1/2/95	1.6	1/2/96	7.7	1/2/97	5.9	1/9/98	1.7	1/11/99	7.0	1/12/00	0.1
8/3/93	16.9	1/3/94	3.5	1/3/95	2.7	1/3/96	8.0	1/3/97	6.7	1/10/98	7.9	1/12/99	4.4	1/13/00	0.4
8/4/93	12.0	1/4/94	5.6	1/4/95	0.8	1/4/96	8.0	1/4/97	7.3	1/11/98	5.9	1/13/99	4.9	1/14/00	0.4
8/5/93	14.2	1/5/94	6.6	1/5/95	1.2	1/5/96	7.8	1/5/97	5.5	1/12/98	2.6	1/14/99	5.4	1/15/00	0.3
8/6/93	22.0	1/6/94	12.8	1/6/95	3.7	1/6/96	8.2	1/6/97	7.6	1/13/98	8.0	1/15/99	4.8	1/16/00	0.3
8/7/93	20.9	1/7/94	6.1	1/7/95	2.7	1/7/96	7.7	1/7/97	5.9	1/14/98	1.3	1/16/99	3.7	1/17/00	0.1
8/8/93	16.2	1/8/94	5.6	1/8/95	1.4	1/8/96	9.0	1/8/97	7.9	1/15/98	2.0	1/17/99	3.2	1/18/00	0.3
8/9/93	10.9	1/9/94	6.0	1/9/95	2.8	1/9/96	7.7	1/9/97	4.4	1/16/98	3.6	1/18/99	3.3	1/19/00	0.2
8/10/93	12.9	1/10/94	10.8	1/10/95	1.1	1/10/96	8.0	1/10/97	4.2	1/17/98	2.6	1/19/99	4.6	1/20/00	0.2
8/11/93	16.2	1/11/94	6.7	1/11/95	8.0	1/11/96	9.1	1/11/97	2.7	1/18/98	3.5	1/20/99	3.9	1/21/00	0.7
8/12/93	10.8	1/12/94	3.0	1/12/95	12.7	1/12/96	9.9	1/12/97	6.0	1/19/98	2.2	1/21/99	3.1	1/22/00	0.5
8/13/93	11.8	1/13/94	1.1	1/13/95	24.1	1/13/96	12.3	1/13/97	3.0	1/20/98	1.9	1/22/99	2.5	1/23/00	0.8
8/14/93	10.6	1/14/94	2.7	1/14/95	30.1	1/14/96	8.3	1/14/97	6.0	1/21/98	1.5	1/23/99	2.8	1/24/00	0.3
8/15/93	9.7	1/15/94	14.1	1/15/95	15.4	1/15/96	8.3	1/15/97	6.1	1/22/98	1.6	1/24/99	3.8	1/25/00	0.2
8/16/93	10.5	1/16/94	11.7	1/16/95	14.8	1/16/96	7.8	1/16/97	5.1	1/23/98	2.1	1/25/99	4.4	1/26/00	0.2
8/17/93	11.3	1/17/94	3.5	1/17/95	6.8	1/17/96	10.8	1/17/97	10.2	1/24/98	1.9	1/26/99	4.3	1/27/00	0.2
8/18/93	13.7	1/18/94	8.2	1/18/95	3.7	1/18/96	8.5	1/18/97	10.6	1/25/98	1.7	1/27/99	3.4	1/28/00	0.9
8/19/93	12.1	1/19/94	10.7	1/19/95	26.7	1/19/96	8.2	1/19/97	6.6	1/26/98	1.8	1/28/99	4.6	1/29/00	0.2
8/20/93	10.7	1/20/94	5.0	1/20/95	12.6	1/20/96	7.7	1/20/97	11.0	1/27/98	1.7	1/29/99	3.7	1/30/00	0.2
8/21/93	7.4	1/21/94	4.5	1/21/95	3.8	1/21/96	7.6	1/21/97	13.7	1/28/98	3.4	1/30/99	4.1	1/31/00	0.5
8/22/93	5.7	1/22/94	4.6	1/22/95	3.9	1/22/96	10.1	1/22/97	10.7	1/29/98	2.1	1/31/99	3.2	2/1/00	0.6
8/23/93	11.0	1/23/94	6.8	1/23/95	2.3	1/23/96	8.3	1/23/97	9.7	1/30/98	2.0	2/1/99	4.2	2/2/00	0.2
8/24/93	9.5	1/24/94	3.8	1/24/95	1.8	1/24/96	11.4	1/24/97	12.7	1/31/98	1.8	2/2/99	4.1	2/3/00	0.4
8/25/93	9.6	1/25/94	3.2	1/25/95	4.7	1/25/96	10.1	1/25/97	9.8	2/1/98	2.1	2/3/99	4.4	2/4/00	0.1
8/26/93	13.1	1/26/94	1.9	1/26/95	3.9	1/26/96	9.2	1/26/97	7.6	2/2/98	1.9	2/4/99	3.5	2/5/00	0.1
8/27/93	14.4	1/27/94	20.8	1/27/95	5.9	1/27/96	11.2	1/27/97	11.7	2/3/98	1.8	2/5/99	3.5	2/6/00	0.2
8/28/93	6.1	1/28/94	37.9	1/28/95	4.5	1/28/96	12.4	1/28/97	7.2	2/4/98	1.6	2/6/99	4.1	2/7/00	0.1
8/29/93	15.0	1/29/94	9.2	1/29/95	5.5	1/29/96	5.0	1/29/97	10.0	2/5/98	2.0	2/7/99	4.1	2/8/00	0.3
8/30/93	11.4	1/30/94	6.3	1/30/95	5.5	1/30/96	4.3	1/30/97	7.5	2/6/98	1.9	2/8/99	3.9	2/9/00	0.7
8/31/93	9.2	1/31/94	5.9	1/31/95	8.2	1/31/96	11.0	2/1/97	4.7	2/7/98	2.1	2/9/99	3.6	2/10/00	1.0

C-2. DAILY AVERAGE OPACITY FOR BETHLEHEM, BURNS HARBOR BATTERY 1

Date	Opacity	Date	Opacity	Date	Opacity	Date	Opacity	Date	Opacity	Date	Opacity	Date	Opacity	Date	Opacity
9/1/93	7.8	2/1/94	18.0	2/1/95	9.2	2/1/96	12.4	2/2/97	4.1	2/8/98	2.2	2/10/99	4.3	2/11/00	1.0
9/2/93	14.3	2/2/94	10.8	2/2/95	4.5	2/2/96	28.9	2/3/97	3.5	2/9/98	2.6	2/11/99	5.1	2/12/00	1.2
9/3/93	9.6	2/3/94	24.3	2/3/95	6.8	2/3/96	39.0	2/4/97	3.1	2/10/98	2.1	2/12/99	4.6	2/13/00	1.2
9/4/93	8.1	2/4/94	13.7	2/4/95	8.9	2/4/96	35.5	2/5/97	7.7	2/11/98	2.8	2/13/99	5.0	2/14/00	0.7
9/5/93	9.2	2/5/94	23.7	2/5/95	10.5	2/5/96	16.5	2/6/97	7.7	2/12/98	1.7	2/14/99	4.4	2/15/00	0.1
9/6/93	9.7	2/6/94	20.7	2/6/95	4.5	2/6/96	8.1	2/7/97	5.4	2/13/98	1.2	2/15/99	2.8	2/16/00	0.3
9/7/93	6.8	2/7/94	17.0	2/7/95	4.0	2/7/96	9.6	2/8/97	3.7	2/14/98	1.8	2/16/99	3.8	2/17/00	0.3
9/8/93	8.5	2/8/94	11.8	2/8/95	3.3	2/8/96	9.4	2/9/97	4.4	2/15/98	2.0	2/17/99	4.2	2/18/00	0.2
9/9/93	7.3	2/9/94	16.2	2/9/95	5.2	2/9/96	8.4	2/10/97	4.3	2/16/98	1.6	2/18/99	4.3	2/19/00	0.2
9/10/93	2.2	2/10/94	16.4	2/10/95	5.2	2/10/96	8.2	2/11/97	3.6	2/17/98	2.4	2/19/99	4.4	2/20/00	0.2
9/11/93	4.2	2/11/94	16.0	2/11/95	5.7	2/11/96	8.1	2/12/97	3.7	2/18/98	2.2	2/20/99	4.0	2/21/00	0.5
9/12/93	6.0	2/12/94	20.2	2/12/95	5.6	2/12/96	8.7	2/13/97	2.7	2/19/98	1.9	2/21/99	4.0	2/22/00	0.2
9/13/93	6.9	2/13/94	10.1	2/13/95	5.4	2/13/96	8.4	2/14/97	3.6	2/20/98	2.0	2/22/99	3.9	2/23/00	0.3
9/14/93	21.6	2/14/94	5.5	2/14/95	4.1	2/14/96	8.8	2/15/97	3.5	2/21/98	2.2	2/23/99	3.4	2/24/00	1.0
9/15/93	8.5	2/15/94	3.4	2/15/95	17.1	2/15/96	8.8	2/16/97	3.1	2/22/98	2.4	2/24/99	4.2	2/25/00	0.7
9/16/93	4.6	2/16/94	4.5	2/16/95	9.1	2/16/96	8.7	2/17/97	3.5	2/23/98	2.3	2/25/99	5.2	2/26/00	0.5
9/17/93	6.2	2/17/94	5.7	2/17/95	8.8	2/17/96	9.3	2/18/97	4.8	2/24/98	2.1	2/26/99	4.6	2/27/00	0.2
9/18/93	7.3	2/18/94	5.2	2/18/95	8.0	2/18/96	9.7	2/19/97	12.1	2/25/98	2.7	2/27/99	4.8	2/28/00	0.5
9/19/93	6.7	2/19/94	9.5	2/19/95	15.8	2/19/96	9.5	2/20/97	4.6	2/26/98	3.4	2/28/99	3.9	2/29/00	0.7
9/20/93	7.1	2/20/94	7.4	2/20/95	16.7	2/20/96	8.4	2/21/97	5.0	2/27/98	3.4	3/1/99	3.8	3/1/00	0.5
9/21/93	10.3	2/21/94	5.6	2/21/95	7.1	2/21/96	7.5	2/22/97	4.1	2/28/98	3.2	3/2/99	4.5	3/2/00	0.2
9/22/93	9.2	2/22/94	11.4	2/22/95	5.8	2/22/96	7.7	2/23/97	4.2	3/1/98	2.7	3/3/99	3.1	3/3/00	0.3
9/23/93	7.4	2/23/94	7.3	2/23/95	17.6	2/23/96	7.8	2/24/97	4.6	3/2/98	2.2	3/4/99	4.1	3/4/00	0.6
9/24/93	4.3	2/24/94	5.9	2/24/95	8.3	2/24/96	8.4	2/25/97	4.7	3/3/98	2.1	3/5/99	3.7	3/5/00	0.3
9/25/93	11.4	2/25/94	28.0	2/25/95	9.0	2/25/96	8.8	2/26/97	4.5	3/4/98	2.4	3/6/99	3.0	3/6/00	0.3
9/26/93	7.9	2/26/94	20.0	2/26/95	13.1	2/26/96	9.2	2/27/97	4.5	3/5/98	2.3	3/7/99	3.3	3/7/00	2.2
9/27/93	18.3	2/27/94	13.1	2/27/95	29.8	2/27/96	9.1	2/28/97	5.8	3/6/98	3.7	3/8/99	2.6	3/8/00	0.7
9/28/93	4.7	2/28/94	9.8	2/28/95	14.7	2/28/96	8.4	3/1/97	5.9	3/7/98	2.4	3/9/99	2.6	3/9/00	0.4
9/29/93	3.5	3/1/94	6.7	3/1/95	6.5	3/1/96	8.7	3/2/97	7.1	3/8/98	2.8	3/10/99	4.1	3/10/00	0.6
9/30/93	8.2	3/2/94	11.2	3/2/95	12.5	3/2/96	9.9	3/3/97	4.5	3/9/98	2.7	3/11/99	4.2	3/11/00	0.7
10/1/93	7.2	3/3/94	8.8	3/3/95	9.5	3/3/96	11.0	3/4/97	5.8	3/10/98	2.6	3/12/99	4.3	3/12/00	0.9

C-2. DAILY AVERAGE OPACITY FOR BETHLEHEM, BURNS HARBOR BATTERY 1

Date	Opacity	Date	Opacity	Date	Opacity	Date	Opacity	Date	Opacity	Date	Opacity	Date	Opacity	Date	Opacity
10/2/93	4.0	3/4/94	8.5	3/4/95	9.1	3/4/96	9.0	3/5/97	6.0	3/11/98	2.8	3/13/99	4.1	3/13/00	0.5
10/3/93	4.5	3/5/94	9.0	3/5/95	23.5	3/5/96	9.7	3/6/97	15.0	3/12/98	2.9	3/14/99	4.2	3/14/00	0.6
10/4/93	5.1	3/6/94	7.8	3/6/95	14.3	3/6/96	8.6	3/7/97	6.7	3/13/98	3.7	3/15/99	4.6	3/15/00	1.1
10/5/93	4.0	3/7/94	8.7	3/7/95	27.8	3/7/96	9.0	3/8/97	4.3	3/14/98	3.7	3/16/99	4.2	3/16/00	0.5
10/6/93	5.1	3/8/94	6.0	3/8/95	4.2	3/8/96	8.6	3/9/97	3.7	3/15/98	3.7	3/17/99	4.3	3/17/00	0.6
10/7/93	7.8	3/9/94	8.5	3/9/95	7.6	3/9/96	8.9	3/10/97	3.5	3/16/98	3.9	3/18/99	4.7	3/18/00	0.6
10/8/93	8.6	3/10/94	6.7	3/10/95	7.7	3/10/96	10.1	3/11/97	4.0	3/17/98	4.9	3/19/99	5.0	3/19/00	0.5
10/9/93	6.3	3/11/94	4.8	3/11/95	6.2	3/11/96	9.4	3/12/97	3.5	3/18/98	8.2	3/20/99	5.2	3/20/00	2.9
10/10/93	2.4	3/12/94	7.7	3/12/95	10.4	3/12/96	9.2	3/13/97	2.6	3/19/98	7.2	3/21/99	5.5	3/21/00	5.6
10/11/93	3.8	3/13/94	8.0	3/13/95	9.0	3/13/96	9.7	3/14/97	3.4	3/20/98	5.2	3/22/99	3.8	3/22/00	4.7
10/12/93	5.5	3/14/94	14.0	3/14/95	13.9	3/14/96	9.3	3/15/97	4.2	3/21/98	4.4	3/23/99	3.8	3/23/00	4.6
10/13/93	2.3	3/15/94	7.2	3/15/95	12.9	3/15/96	10.4	3/16/97	4.4	3/22/98	4.6	3/24/99	4.7	3/24/00	5.0
10/14/93	8.3	3/16/94	10.8	3/16/95	7.5	3/16/96	8.1	3/17/97	4.4	3/23/98	5.0	3/25/99	4.2	3/25/00	4.5
10/15/93	5.5	3/17/94	12.3	3/17/95	7.1	3/17/96	8.7	3/18/97	4.2	3/24/98	4.6	3/26/99	4.6	3/26/00	4.3
10/16/93	29.5	3/18/94	10.0	3/18/95	5.8	3/18/96	8.7	3/19/97	5.0	3/25/98	6.9	3/27/99	5.6	3/27/00	4.1
10/17/93	36.9	3/19/94	13.8	3/19/95	6.7	3/19/96	8.6	3/20/97	5.6	3/26/98	9.5	3/28/99	5.7	3/28/00	4.3
10/18/93	7.5	3/20/94	8.3	3/20/95	4.4	3/20/96	7.8	3/21/97	6.0	3/27/98	9.1	3/29/99	6.3	3/29/00	4.7
10/19/93	7.5	3/21/94	20.0	3/21/95	1.1	3/21/96	10.4	3/22/97	4.9	3/28/98	7.5	3/30/99	6.0	3/30/00	4.5
10/20/93	11.9	3/22/94	9.2	3/22/95	1.7	3/22/96	10.4	3/23/97	4.3	3/29/98	8.4	3/31/99	6.0	3/31/00	5.0
10/21/93	5.7	3/23/94	11.7	3/23/95	1.2	3/23/96	9.8	3/24/97	4.2	3/30/98	9.8	4/1/99	6.0	4/1/00	5.2
10/22/93	11.6	3/24/94	11.7	3/24/95	2.3	3/24/96	8.9	3/25/97	13.0	3/31/98	9.0	4/2/99	6.2	4/2/00	5.8
10/23/93	7.7	3/25/94	14.2	3/25/95	2.3	3/25/96	8.6	3/26/97	7.0	4/1/98	2.9	4/3/99	6.5	4/3/00	5.3
10/24/93	8.4	3/26/94	16.4	3/26/95	2.4	3/26/96	8.6	3/27/97	6.8	4/2/98	2.8	4/4/99	6.2	4/4/00	5.2
10/25/93	8.1	3/27/94	14.2	3/27/95	1.5	3/27/96	10.8	3/28/97	7.7	4/3/98	2.6	4/5/99	4.0	4/5/00	5.5
10/26/93	8.2	3/28/94	16.2	3/28/95	1.8	3/28/96	10.0	3/29/97	5.0	4/4/98	1.9	4/6/99	3.9	4/6/00	5.9
10/27/93	4.6	3/29/94	8.0	3/29/95	5.6	3/29/96	9.4	3/30/97	4.8	4/5/98	1.8	4/7/99	5.2	4/7/00	5.1
10/28/93	5.5	3/30/94	6.2	3/30/95	16.5	3/30/96	9.0	4/1/97	5.8	4/6/98	2.4	4/8/99	5.7	4/8/00	4.3
10/29/93	4.9	3/31/94	5.0	3/31/95	9.4	3/31/96	9.1	4/2/97	7.0	4/7/98	4.1	4/9/99	3.8	4/9/00	4.7
10/30/93	6.8	4/1/94	8.9	4/1/95	7.2	4/1/96	9.9	4/3/97	6.9	4/8/98	5.1	4/10/99	3.8	4/10/00	5.1
10/31/93	5.3	4/2/94	6.7	4/2/95	7.8	4/2/96	8.7	4/4/97	6.8	4/9/98	3.6	4/11/99	3.4	4/11/00	4.2
11/1/93	6.5	4/3/94	7.5	4/3/95	8.8	4/3/96	10.0	4/5/97	5.5	4/10/98	3.7	4/12/99	5.0	4/12/00	5.1

C-2. DAILY AVERAGE OPACITY FOR BETHLEHEM, BURNS HARBOR BATTERY 1

Date	Opacity	Date	Opacity	Date	Opacity	Date	Opacity	Date	Opacity	Date	Opacity	Date	Opacity	Date	Opacity
11/2/93	9.6	4/4/94	6.1	4/4/95	7.1	4/4/96	10.9	4/6/97	4.2	4/11/98	5.2	4/13/99	5.6	4/13/00	5.0
11/3/93	11.8	4/5/94	7.0	4/5/95	7.7	4/5/96	11.4	4/7/97	3.4	4/12/98	7.9	4/14/99	5.4	4/14/00	5.7
11/4/93	14.8	4/6/94	7.5	4/6/95	18.8	4/6/96	9.6	4/8/97	4.5	4/13/98	7.5	4/15/99	4.4	4/15/00	5.2
11/5/93	8.6	4/7/94	8.2	4/7/95	13.4	4/7/96	11.7	4/9/97	4.8	4/14/98	7.9	4/16/99	4.1	4/16/00	5.2
11/6/93	6.5	4/8/94	8.3	4/8/95	12.2	4/8/96	9.9	4/10/97	4.6	4/15/98	7.6	4/17/99	4.7	4/17/00	5.2
11/7/93	4.2	4/9/94	11.3	4/9/95	7.3	4/9/96	9.4	4/11/97	4.1	4/16/98	4.9	4/18/99	4.9	4/18/00	6.1
11/8/93	5.5	4/10/94	7.0	4/10/95	5.9	4/10/96	9.6	4/12/97	4.6	4/17/98	3.6	4/19/99	4.7	4/19/00	6.5
11/9/93	4.0	4/11/94	11.9	4/11/95	7.2	4/11/96	16.1	4/13/97	5.5	4/18/98	4.7	4/20/99	5.7	4/20/00	5.8
11/10/93	5.7	4/12/94	25.8	4/12/95	6.9	4/12/96	9.8	4/14/97	6.2	4/19/98	5.7	4/21/99	5.8	4/21/00	5.1
11/11/93	7.1	4/13/94	13.5	4/13/95	7.8	4/13/96	9.1	4/15/97	5.3	4/20/98	5.0	4/22/99	5.1	4/22/00	5.8
11/12/93	6.9	4/14/94	7.3	4/14/95	10.6	4/14/96	9.2	4/16/97	5.6	4/21/98	6.1	4/23/99	3.8	4/23/00	5.6
11/13/93	13.7	4/15/94	11.1	4/15/95	6.8	4/15/96	9.0	4/17/97	4.9	4/22/98	6.5	4/24/99	4.7	4/24/00	5.4
11/14/93	14.4	4/16/94	9.3	4/16/95	9.9	4/16/96	10.0	4/18/97	5.8	4/23/98	7.8	4/25/99	5.0	4/25/00	5.5
11/15/93	15.1	4/17/94	8.2	4/17/95	6.9	4/17/96	10.2	4/19/97	6.1	4/24/98	8.8	4/26/99	4.9	4/26/00	5.7
11/16/93	5.2	4/18/94	10.1	4/18/95	3.9	4/18/96	9.6	4/20/97	5.6	4/25/98	7.7	4/27/99	4.0	4/27/00	6.3
11/17/93	6.4	4/19/94	10.9	4/19/95	6.5	4/19/96	11.5	4/21/97	6.1	4/26/98	6.5	4/28/99	4.3	4/28/00	6.2
11/18/93	8.2	4/20/94	11.3	4/20/95	10.8	4/20/96	9.3	4/22/97	5.7	4/27/98	4.3	4/29/99	4.4	4/29/00	4.9
11/19/93	7.0	4/21/94	20.5	4/21/95	10.9	4/21/96	9.9	4/23/97	6.3	4/28/98	5.2	4/30/99	4.9	4/30/00	5.8
11/20/93	7.8	4/22/94	12.8	4/22/95	18.4	4/22/96	10.4	4/24/97	5.0	4/29/98	7.8	5/1/99	5.9	5/1/00	6.2
11/21/93	7.9	4/23/94	11.9	4/23/95	12.1	4/23/96	9.8	4/25/97	5.8	4/30/98	8.7	5/2/99	6.2	5/2/00	6.9
11/22/93	9.7	4/24/94	10.6	4/24/95	23.3	4/24/96	9.6	4/26/97	5.8	5/1/98	8.4	5/3/99	7.6	5/3/00	6.7
11/23/93	6.5	4/25/94	12.2	4/25/95	24.6	4/25/96	9.1	4/27/97	4.9	5/2/98	8.4	5/4/99	8.0	5/4/00	8.6
11/24/93	17.7	4/26/94	13.9	4/26/95	18.2	4/26/96	9.1	4/28/97	6.0	5/3/98	6.9	5/5/99	7.6	5/5/00	8.4
11/25/93	27.8	4/27/94	10.7	4/27/95	1.2	4/27/96	10.7	4/29/97	4.9	5/4/98	8.4	5/6/99	5.6	5/6/00	7.3
11/26/93	5.0	4/28/94	14.2	4/28/95	0.3	4/28/96	8.6	4/30/97	5.4	5/5/98	9.6	5/7/99	4.2	5/7/00	6.9
11/27/93	10.0	4/29/94	7.0	4/29/95	2.2	4/29/96	9.0	5/1/97	4.5	5/6/98	4.6	5/8/99	4.5	5/8/00	7.6
11/28/93	24.5	4/30/94	20.6	4/30/95	0.9	4/30/96	8.9	5/2/97	3.8	5/7/98	4.7	5/9/99	5.2	5/9/00	5.8
11/29/93	14.3	5/1/94	9.5	5/1/95	0.6	5/1/96	9.3	5/3/97	4.0	5/8/98	3.2	5/10/99	5.7	5/10/00	5.6
11/30/93	7.4	5/2/94	8.3	5/2/95	0.8	5/2/96	12.4	5/4/97	5.9	5/9/98	3.5	5/11/99	7.5	5/11/00	6.5
12/1/93	7.5	5/3/94	13.5	5/3/95	4.8	5/3/96	10.5	5/5/97	5.1	5/10/98	3.5	5/12/99	7.1	5/12/00	7.3
12/2/93	17.1	5/4/94	10.0	5/4/95	4.6	5/4/96	10.2	5/6/97	5.7	5/11/98	3.9	5/13/99	5.6	5/13/00	5.5

C-2. DAILY AVERAGE OPACITY FOR BETHLEHEM, BURNS HARBOR BATTERY 1

Date	Opacity	Date	Opacity	Date	Opacity	Date	Opacity	Date	Opacity	Date	Opacity	Date	Opacity	Date	Opacity
12/3/93	11.2	5/5/94	9.6	5/5/95	4.3	5/5/96	11.0	5/7/97	4.8	5/12/98	5.4	5/14/99	5.4	5/14/00	5.0
12/4/93	12.7	5/6/94	2.5	5/6/95	5.8	5/6/96	10.8	5/8/97	5.9	5/13/98	5.9	5/15/99	6.8	5/15/00	5.9
12/5/93	8.0	5/7/94	15.1	5/7/95	6.8	5/7/96	10.4	5/9/97	4.8	5/14/98	7.2	5/16/99	8.5	5/16/00	6.1
12/6/93	9.0	5/8/94	9.5	5/8/95	5.9	5/8/96	11.3	5/10/97	5.7	5/15/98	7.4	5/17/99	7.7	5/17/00	5.9
12/7/93	5.4	5/9/94	13.5	5/9/95	5.1	5/9/96	12.0	5/11/97	5.0	5/16/98	6.1	5/18/99	6.2	5/18/00	5.5
12/8/93	8.6	5/10/94	11.9	5/10/95	13.8	5/10/96	12.2	5/12/97	5.7	5/17/98	7.8	5/19/99	6.3	5/19/00	4.6
12/9/93	7.1	5/11/94	10.5	5/11/95	6.3	5/11/96	12.4	5/13/97	5.3	5/18/98	7.8	5/20/99	7.3	5/20/00	5.5
12/10/93	6.1	5/12/94	11.0	5/12/95	6.5	5/12/96	10.4	5/14/97	5.8	5/19/98	7.0	5/21/99	7.1	5/21/00	5.8
12/11/93	5.9	5/13/94	11.5	5/13/95	7.9	5/13/96	10.6	5/15/97	4.6	5/20/98	5.2	5/22/99	6.9	5/22/00	6.5
12/12/93	3.5	5/14/94	16.0	5/14/95	8.5	5/14/96	9.8	5/16/97	4.9	5/21/98	5.0	5/23/99	5.8	5/23/00	7.9
12/13/93	6.8	5/15/94	16.3	5/15/95	6.7	5/15/96	11.3	5/17/97	5.0	5/22/98	4.1	5/24/99	7.9	5/24/00	8.1
12/14/93	4.7	5/16/94	9.8	5/16/95	6.2	5/16/96	10.6	5/18/97	5.2	5/23/98	4.1	5/25/99	5.0	5/25/00	7.3
12/15/93	3.5	5/17/94	7.1	5/17/95	4.1	5/17/96	17.0	5/19/97	5.7	5/24/98	4.4	5/26/99	6.8	5/26/00	7.1
12/16/93	5.0	5/18/94	11.7	5/18/95	4.5	5/18/96	13.7	5/20/97	4.9	5/25/98	4.9	5/27/99	8.4	5/27/00	6.3
12/17/93	9.1	5/19/94	16.3	5/19/95	5.7	5/19/96	12.4	5/21/97	4.9	5/26/98	4.5	5/28/99	10.1	5/28/00	6.0
12/18/93	15.1	5/20/94	12.2	5/20/95	6.5	5/20/96	11.7	5/22/97	5.9	5/27/98	5.1	5/29/99	10.5	5/29/00	6.8
12/19/93	4.7	5/21/94	10.1	5/21/95	5.6	5/21/96	10.1	5/23/97	7.2	5/28/98	7.7	5/30/99	9.2	5/30/00	8.1
12/20/93	12.2	5/22/94	10.1	5/22/95	6.4	5/22/96	12.3	5/24/97	10.0	5/29/98	7.1	5/31/99	7.0	5/31/00	7.4
12/21/93	8.1	5/23/94	8.4	5/23/95	5.2	5/23/96	9.6	5/25/97	4.9	5/30/98	7.4	6/1/99	7.5	6/1/00	8.1
12/22/93	15.2	5/24/94	7.2	5/24/95	3.4	5/24/96	9.1	5/26/97	3.4	5/31/98	6.3	6/2/99	6.4	6/2/00	7.3
12/23/93	18.4	5/25/94	10.3	5/25/95	6.6	5/25/96	9.1	5/27/97	5.4	5/31/98	5.1	6/3/99	6.3	6/3/00	6.3
12/24/93	8.5	5/26/94	11.1	5/26/95	5.5	5/26/96	9.2	5/28/97	5.2	6/1/98	4.0	6/4/99	7.2	6/4/00	6.4
12/25/93	8.2	5/27/94	8.9	5/27/95	6.5	5/27/96	8.9	5/29/97	6.6	6/2/98	3.8	6/5/99	9.1	6/5/00	6.7
12/26/93	10.0	5/28/94	9.1	5/28/95	6.9	5/28/96	8.8	5/30/97	6.6	6/3/98	3.5	6/6/99	9.5	6/6/00	7.7
12/27/93	6.8	5/29/94	8.2	5/29/95	5.3	5/29/96	9.8	5/31/97	6.3	6/4/98	3.2	6/7/99	9.5	6/7/00	7.5
12/28/93	3.4	5/30/94	9.7	5/30/95	6.3	5/30/96	10.0	6/1/97	4.7	6/5/98	3.3	6/8/99	9.5	6/8/00	9.1
12/29/93	3.9	5/31/94	12.2	5/31/95	6.6	5/31/96	10.8	6/2/97	5.9	6/6/98	3.0	6/9/99	9.4	6/9/00	9.2
12/30/93	6.2	6/1/94	9.1	6/1/95	7.4	6/1/96	9.7	6/3/97	9.0	6/7/98	3.5	6/10/99	8.0	6/10/00	8.7
12/31/93	3.4	6/2/94	8.1	6/2/95	5.8	6/2/96	9.7	6/4/97	7.4	6/8/98	3.6	6/11/99	8.5	6/11/00	8.4
		6/3/94	8.5	6/3/95	12.1	6/3/96	9.8	6/5/97	8.5	6/9/98	4.3	6/12/99	7.5	6/12/00	6.0
		6/4/94	10.6	6/4/95	10.6	6/4/96	9.9	6/6/97	8.2	6/10/98	5.7	6/13/99	6.7	6/13/00	7.8

C-2. DAILY AVERAGE OPACITY FOR BETHLEHEM, BURNS HARBOR BATTERY 1

Date	Opacity	Date	Opacity	Date	Opacity	Date	Opacity	Date	Opacity	Date	Opacity	Date	Opacity	Date	Opacity
		6/5/94	12.3	6/5/95	8.5	6/5/96	10.8	6/7/97	7.0	6/11/98	4.6	6/14/99	5.8	6/14/00	7.3
		6/6/94	10.0	6/6/95	7.3	6/6/96	10.2	6/8/97	6.1	6/12/98	3.8	6/15/99	4.4	6/15/00	7.6
		6/7/94	9.5	6/7/95	7.2	6/7/96	10.0	6/9/97	7.3	6/13/98	5.3	6/16/99	5.8	6/16/00	6.9
		6/8/94	6.7	6/8/95	3.8	6/8/96	9.9	6/10/97	8.3	6/14/98	5.8	6/17/99	5.4	6/17/00	5.7
		6/9/94	3.4	6/9/95	3.7	6/9/96	9.4	6/11/97	9.6	6/15/98	5.6	6/18/99	5.9	6/18/00	7.2
		6/10/94	3.6	6/10/95	6.1	6/10/96	9.7	6/12/97	9.0	6/16/98	4.6	6/19/99	8.0	6/19/00	8.1
		6/11/94	4.9	6/11/95	4.2	6/11/96	9.8	6/13/97	9.4	6/17/98	4.3	6/20/99	7.7	6/20/00	7.4
		6/12/94	7.8	6/12/95	3.7	6/12/96	10.8	6/14/97	9.1	6/18/98	6.2	6/21/99	9.6	6/21/00	8.2
		6/13/94	20.6	6/13/95	5.0	6/13/96	11.1	6/15/97	8.6	6/19/98	5.4	6/22/99	9.3	6/22/00	8.6
		6/14/94	10.7	6/14/95	6.7	6/14/96	10.9	6/16/97	8.8	6/20/98	7.1	6/23/99	9.2	6/23/00	9.4
		6/15/94	12.3	6/15/95	8.7	6/15/96	10.8	6/17/97	7.2	6/21/98	7.4	6/24/99	9.5	6/24/00	8.4
		6/16/94	18.9	6/16/95	8.6	6/16/96	10.8	6/18/97	8.7	6/22/98	6.3	6/25/99	9.8	6/25/00	11.1
		6/17/94	15.8	6/17/95	9.0	6/17/96	10.0	6/19/97	10.1	6/23/98	5.5	6/26/99	9.8	6/26/00	10.5
		6/18/94	13.4	6/18/95	9.8	6/18/96	5.0	6/20/97	11.5	6/24/98	6.9	6/27/99	9.6	6/27/00	8.2
		6/19/94	9.8	6/19/95	7.5	6/19/96	7.6	6/21/97	11.7	6/25/98	6.8	6/28/99	8.9	6/28/00	8.7
		6/20/94	12.0	6/20/95	4.1	6/20/96	6.3	6/22/97	12.2	6/26/98	5.8	6/29/99	6.0	6/29/00	8.7
		6/21/94	6.0	6/21/95	2.0	6/21/96	5.9	6/23/97	14.8	6/27/98	6.7	6/30/99	7.1	6/30/00	8.7
		6/22/94	2.3	6/22/95	2.6	6/22/96	4.9	6/24/97	11.3	6/28/98	6.1	7/1/99	8.3	7/1/00	9.0
		6/23/94	6.5	6/23/95	2.2	6/23/96	4.8	6/25/97	8.9	6/29/98	6.3	7/2/99	8.0	7/2/00	9.6
		6/24/94	27.8	6/24/95	2.1	6/24/96	3.3	6/26/97	8.5	6/30/98	4.9	7/3/99	9.7	7/3/00	8.3
		6/25/94	4.6	6/25/95	0.6	6/25/96	4.0	6/27/97	9.9	7/1/98	5.5	7/4/99	10.4	7/4/00	9.1
		6/26/94	10.4	6/26/95	1.6	6/26/96	6.6	6/28/97	10.4	7/2/98	5.3	7/5/99	11.3	7/5/00	9.6
		6/27/94	4.1	6/27/95	0.3	6/27/96	7.3	6/29/97	9.7	7/3/98	7.3	7/6/99	11.9	7/6/00	10.2
		6/28/94	5.9	6/28/95	5.2	6/28/96	9.4	6/30/97	12.6	7/4/98	4.6	7/7/99	10.5	7/7/00	9.4
		6/29/94	4.2	6/29/95	1.3	6/29/96	5.9	7/1/97	8.0	7/5/98	4.8	7/8/99	9.9	7/8/00	9.9
		6/30/94	3.8	6/30/95	0.8	6/30/96	6.8	7/2/97	8.6	7/6/98	6.3	7/9/99	11.3	7/9/00	10.5
		7/1/94	2.7	7/1/95	1.3	7/1/96	5.5	7/3/97	4.3	7/7/98	7.3	7/10/99	7.9	7/10/00	9.9
		7/2/94	2.1	7/2/95	2.2	7/2/96	3.8	7/4/97	3.8	7/8/98	5.5	7/11/99	8.8	7/11/00	9.5
		7/3/94	1.3	7/3/95	1.4	7/3/96	3.9	7/5/97	5.3	7/9/98	6.3	7/12/99	9.3	7/12/00	10.3
		7/4/94	4.3	7/4/95	1.4	7/4/96	4.8	7/6/97	4.9	7/10/98	5.9	7/13/99	9.1	7/13/00	9.5
		7/5/94	8.3	7/5/95	1.0	7/5/96	5.5	7/7/97	4.7	7/11/98	5.3	7/14/99	9.8	7/14/00	9.7

C-2. DAILY AVERAGE OPACITY FOR BETHLEHEM, BURNS HARBOR BATTERY 1

Date	Opacity	Date	Opacity	Date	Opacity	Date	Opacity	Date	Opacity	Date	Opacity	Date	Opacity	Date	Opacity
		7/6/94	8.3	7/6/95	1.1	7/6/96	5.7	7/8/97	4.2	7/12/98	5.9	7/15/99	9.4	7/15/00	9.0
		7/7/94	7.4	7/7/95	1.1	7/7/96	5.3	7/9/97	4.8	7/13/98	6.1	7/16/99	10.1	7/16/00	9.0
		7/8/94	6.4	7/8/95	2.1	7/8/96	5.0	7/10/97	4.1	7/14/98	6.0	7/17/99	9.0	7/17/00	10.0
		7/9/94	3.2	7/9/95	1.4	7/9/96	3.5	7/11/97	5.2	7/15/98	5.6	7/18/99	9.7	7/18/00	8.3
		7/10/94	5.0	7/10/95	2.5	7/10/96	4.1	7/12/97	5.5	7/16/98	6.0	7/19/99	10.1	7/19/00	7.6
		7/11/94	3.2	7/11/95	2.9	7/11/96	5.4	7/13/97	5.8	7/17/98	6.3	7/20/99	9.7	7/20/00	7.9
		7/12/94	4.4	7/12/95	6.0	7/12/96	5.1	7/14/97	5.1	7/18/98	7.8	7/21/99	10.3	7/21/00	8.1
		7/13/94	6.2	7/13/95	6.6	7/13/96	5.4	7/15/97	5.3	7/19/98	6.3	7/22/99	10.9	7/22/00	8.1
		7/14/94	9.8	7/14/95	6.5	7/14/96	4.2	7/16/97	6.5	7/20/98	5.8	7/23/99	11.6	7/23/00	7.9
		7/15/94	12.9	7/15/95	6.9	7/15/96	4.0	7/17/97	6.0	7/21/98	6.2	7/24/99	11.9	7/24/00	8.2
		7/16/94	3.9	7/16/95	3.6	7/16/96	6.5	7/18/97	3.9	7/22/98	5.3	7/25/99	12.9	7/25/00	8.7
		7/17/94	5.6	7/17/95	14.6	7/17/96	5.5	7/19/97	3.1	7/23/98	4.9	7/26/99	12.7	7/26/00	8.9
		7/18/94	2.4	7/18/95	26.9	7/18/96	6.1	7/20/97	4.6	7/24/98	5.9	7/27/99	11.1	7/27/00	9.6
		7/19/94	4.9	7/19/95	36.2	7/19/96	5.1	7/21/97	3.8	7/25/98	5.8	7/28/99	12.1	7/28/00	9.7
		7/20/94	11.7	7/20/95	26.5	7/20/96	3.5	7/22/97	4.1	7/26/98	5.7	7/29/99	13.5	7/29/00	8.7
		7/21/94	10.6	7/21/95	1.4	7/21/96	3.8	7/23/97	4.4	7/27/98	4.9	7/30/99	14.9	7/30/00	8.4
		7/22/94	8.7	7/22/95	1.2	7/22/96	4.2	7/24/97	4.0	7/28/98	5.9	7/31/99	12.4	7/31/00	6.7
		7/23/94	8.4	7/23/95	2.5	7/23/96	4.8	7/25/97	4.8	7/29/98	5.7	8/1/99	10.4	8/1/00	7.0
		7/24/94	6.0	7/24/95	1.5	7/24/96	3.8	7/26/97	5.1	7/30/98	6.4	8/2/99	11.0	8/2/00	8.0
		7/25/94	2.9	7/25/95	2.1	7/25/96	3.7	7/27/97	4.3	7/31/98	4.7	8/3/99	11.7	8/3/00	8.2
		7/26/94	1.4	7/26/95	1.9	7/26/96	3.8	7/28/97	3.8	8/1/98	6.0	8/4/99	13.0	8/4/00	9.7
		7/27/94	1.2	7/27/95	0.9	7/27/96	6.6	7/29/97	2.5	8/2/98	5.2	8/5/99	10.5	8/5/00	8.8
		7/28/94	6.5	7/28/95	8.3	7/28/96	3.6	7/30/97	3.3	8/3/98	6.1	8/6/99	10.5	8/6/00	9.1
		7/29/94	3.0	7/29/95	13.9	7/29/96	4.0	8/1/97	6.3	8/4/98	4.9	8/7/99	10.5	8/7/00	10.0
		7/30/94	4.9	7/30/95	15.4	7/30/96	4.4	8/2/97	6.4	8/5/98	5.6	8/8/99	9.4	8/8/00	11.1
		7/31/94	7.4	7/31/95	14.4	7/31/96	3.9	8/3/97	6.5	8/6/98	6.1	8/9/99	9.0	8/9/00	11.0
		8/1/94	4.9	8/1/95	12.3	8/1/96	4.2	8/4/97	3.0	8/7/98	6.1	8/10/99	10.6	8/10/00	9.9
		8/2/94	6.5	8/2/95	11.9	8/2/96	5.3	8/5/97	2.8	8/8/98	5.6	8/11/99	10.6	8/11/00	9.6
		8/3/94	6.9	8/3/95	6.7	8/3/96	5.1	8/6/97	4.2	8/9/98	6.5	8/12/99	10.2	8/12/00	10.4
		8/4/94	3.3	8/4/95	11.1	8/4/96	4.6	8/7/97	4.4	8/10/98	5.7	8/13/99	9.2	8/13/00	10.0
		8/5/94	1.6	8/5/95	13.3	8/5/96	5.2	8/8/97	4.6	8/11/98	5.0	8/14/99	8.4	8/14/00	9.7

C-2. DAILY AVERAGE OPACITY FOR BETHLEHEM, BURNS HARBOR BATTERY 1

Date	Opacity	Date	Opacity	Date	Opacity	Date	Opacity	Date	Opacity	Date	Opacity	Date	Opacity	Date	Opacity
		8/6/94	1.7	8/6/95	13.8	8/6/96	5.9	8/9/97	4.2	8/12/98	4.3	8/15/99	9.9	8/15/00	9.8
		8/7/94	1.3	8/7/95	12.3	8/7/96	4.8	8/10/97	3.7	8/13/98	5.4	8/16/99	10.1	8/16/00	8.1
		8/8/94	2.2	8/8/95	13.3	8/8/96	4.9	8/11/97	3.5	8/14/98	5.6	8/17/99	11.4	8/17/00	9.0
		8/9/94	1.2	8/9/95	12.5	8/9/96	5.5	8/12/97	3.9	8/15/98	5.0	8/18/99	10.6	8/18/00	11.1
		8/10/94	2.3	8/10/95	11.7	8/10/96	5.7	8/13/97	5.9	8/16/98	5.4	8/19/99	10.2	8/19/00	11.2
		8/11/94	8.1	8/11/95	13.3	8/11/96	6.2	8/14/97	3.6	8/17/98	5.7	8/20/99	9.2	8/20/00	8.7
		8/12/94	1.8	8/12/95	13.3	8/12/96	5.8	8/15/97	5.2	8/18/98	5.6	8/21/99	6.9	8/21/00	7.2
		8/13/94	0.4	8/13/95	13.5	8/13/96	5.5	8/16/97	4.5	8/19/98	5.2	8/22/99	5.3	8/22/00	8.5
		8/14/94	0.5	8/14/95	10.8	8/14/96	4.6	8/17/97	2.5	8/20/98	4.9	8/23/99	9.0	8/23/00	8.3
		8/15/94	1.1	8/15/95	10.6	8/15/96	3.2	8/18/97	2.9	8/21/98	5.2	8/24/99	11.9	8/24/00	8.3
		8/16/94	9.3	8/16/95	8.9	8/16/96	3.8	8/19/97	2.6	8/22/98	4.6	8/25/99	10.2	8/25/00	8.2
		8/17/94	6.5	8/17/95	10.9	8/17/96	4.8	8/20/97	2.6	8/23/98	4.7	8/26/99	8.3	8/26/00	8.2
		8/18/94	3.3	8/18/95	11.5	8/18/96	3.9	8/21/97	2.6	8/24/98	4.8	8/27/99	6.8	8/27/00	7.5
		8/19/94	8.9	8/19/95	8.9	8/19/96	3.5	8/22/97	2.7	8/25/98	5.1	8/28/99	7.7	8/28/00	7.5
		8/20/94	2.7	8/20/95	7.1	8/20/96	4.1	8/23/97	2.5	8/26/98	5.3	8/29/99	5.4	8/29/00	7.7
		8/21/94	5.7	8/21/95	9.8	8/21/96	4.1	8/24/97	2.5	8/27/98	4.9	8/30/99	3.8	8/30/00	8.4
		8/22/94	3.6	8/22/95	8.7	8/22/96	4.3	8/25/97	3.7	8/28/98	5.4	8/31/99	4.7	8/31/00	8.9
		8/23/94	7.2	8/23/95	9.1	8/23/96	5.1	8/26/97	4.9	8/29/98	4.9	9/1/99	7.0		
		8/24/94	6.4	8/24/95	8.3	8/24/96	5.5	8/27/97	5.1	8/30/98	5.2	9/2/99	7.6		
		8/25/94	9.9	8/25/95	8.3	8/25/96	6.2	8/28/97	4.5	8/31/98	4.7	9/3/99	9.3		
		8/26/94	5.0	8/26/95	8.5	8/26/96	5.8	8/29/97	6.8	9/1/98	5.3	9/4/99	7.8		
		8/27/94	5.7	8/27/95	8.1	8/27/96	5.9	8/30/97	3.6	9/2/98	5.1	9/5/99	7.8		
		8/28/94	2.0	8/28/95	5.7	8/28/96	6.2	9/1/97	4.1	9/3/98	4.8	9/6/99	5.9		
		8/29/94	3.9	8/29/95	4.2	8/29/96	6.5	9/2/97	3.9	9/4/98	4.5	9/7/99	4.8		
		8/30/94	4.6	8/30/95	5.9	8/30/96	6.4	9/3/97	2.5	9/5/98	4.8	9/8/99	6.5		
		8/31/94	2.5	8/31/95	3.9	8/31/96	7.2	9/4/97	2.8	9/6/98	6.8	9/9/99	3.9		
		9/1/94	1.1	9/1/95	3.2	9/1/96	6.7	9/5/97	2.7	9/7/98	4.7	9/10/99	4.4		
		9/2/94	6.2	9/2/95	4.4	9/2/96	6.3	9/6/97	3.7	9/8/98	3.0	9/11/99	4.4		
		9/3/94	2.2	9/3/95	5.2	9/3/96	7.0	9/7/97	3.3	9/9/98	3.3	9/12/99	5.8		
		9/4/94	1.7	9/4/95	4.8	9/4/96	7.4	9/8/97	3.2	9/10/98	4.1	9/13/99	2.8		
		9/5/94	3.6	9/5/95	3.9	9/5/96	8.3	9/9/97	3.3	9/11/98	5.3	9/14/99	2.6		

C-2. DAILY AVERAGE OPACITY FOR BETHLEHEM, BURNS HARBOR BATTERY 1

Date	Opacity	Date	Opacity	Date	Opacity	Date	Opacity	Date	Opacity	Date	Opacity	Date	Opacity	Date	Opacity
		9/6/94	6.5	9/6/95	4.8	9/6/96	7.3	9/10/97	2.1	9/12/98	6.2	9/15/99	3.7		
		9/7/94	8.4	9/7/95	1.7	9/7/96	8.5	9/11/97	3.3	9/13/98	6.7	9/16/99	3.5		
		9/8/94	7.0	9/8/95	1.6	9/8/96	6.0	9/12/97	4.0	9/14/98	6.5	9/17/99	3.6		
		9/9/94	6.7	9/9/95	1.9	9/9/96	6.0	9/13/97	3.7	9/15/98	4.6	9/18/99	4.8		
		9/10/94	7.1	9/10/95	0.6	9/10/96	7.1	9/14/97	4.0	9/16/98	4.2	9/19/99	5.3		
		9/11/94	5.5	9/11/95	1.2	9/11/96	5.8	9/15/97	5.1	9/17/98	4.4	9/20/99	3.9		
		9/12/94	5.8	9/12/95	8.8	9/12/96	4.8	9/16/97	4.8	9/18/98	4.2	9/21/99	3.6		
		9/13/94	9.0	9/13/95	8.6	9/13/96	4.1	9/17/97	4.4	9/19/98	4.6	9/22/99	4.6		
		9/14/94	7.1	9/14/95	3.5	9/14/96	3.5	9/18/97	3.9	9/20/98	4.5	9/23/99	6.5		
		9/15/94	6.4	9/15/95	2.1	9/15/96	4.1	9/19/97	3.0	9/21/98	3.3	9/24/99	6.8		
		9/16/94	6.9	9/16/95	2.5	9/16/96	4.3	9/20/97	2.3	9/22/98	2.5	9/25/99	7.7		
		9/17/94	4.3	9/17/95	2.4	9/17/96	5.1	9/21/97	2.6	9/23/98	2.5	9/26/99	8.9		
		9/18/94	1.9	9/18/95	1.9	9/18/96	5.4	9/22/97	2.7	9/24/98	2.7	9/27/99	8.4		
		9/19/94	2.3	9/19/95	1.0	9/19/96	6.0	9/23/97	2.7	9/25/98	4.6	9/28/99	7.6		
		9/20/94	2.7	9/20/95	1.4	9/20/96	6.2	9/24/97	2.6	9/26/98	5.8	9/29/99	4.6		
		9/21/94	1.5	9/21/95	0.3	9/21/96	6.2	9/25/97	3.2	9/27/98	5.7	9/30/99	4.9		
		9/22/94	1.1	9/22/95	0.5	9/22/96	9.5	9/26/97	4.2	9/28/98	4.4	10/1/99	5.2		
		9/23/94	0.9	9/23/95	2.2	9/23/96	4.9	9/27/97	4.1	9/29/98	4.0	10/2/99	5.2		
		9/24/94	1.2	9/24/95	1.4	9/24/96	5.2	9/28/97	4.2	9/30/98	4.1	10/3/99	4.7		
		9/25/94	2.5	9/25/95	1.1	9/25/96	5.6	9/29/97	3.5	10/1/98	3.0	10/4/99	5.1		
		9/26/94	4.0	9/26/95	2.1	9/26/96	4.2	9/30/97	3.0	10/2/98	2.8	10/5/99	4.8		
		9/27/94	3.4	9/27/95	1.9	9/27/96	3.7	10/1/97	2.6	10/3/98	2.6	10/6/99	5.5		
		9/28/94	1.1	9/28/95	2.4	9/28/96	2.4	10/2/97	2.7	10/4/98	2.8	10/7/99	6.3		
		9/29/94	0.3	9/29/95	2.9	9/29/96	3.7	10/3/97	4.0	10/5/98	3.9	10/8/99	6.6		
		9/30/94	0.7	9/30/95	2.5	9/30/96	5.0	10/4/97	3.8	10/6/98	4.9	10/9/99	8.3		
		10/1/94	1.9	10/1/95	3.5	10/1/96	6.0	10/5/97	4.1	10/7/98	3.3	10/10/99	9.5		
		10/2/94	0.5	10/2/95	2.6	10/2/96	3.9	10/6/97	4.7	10/8/98	3.1	10/11/99	7.6		
		10/3/94	0.4	10/3/95	1.9	10/3/96	14.4	10/7/97	4.6	10/9/98	4.2	10/12/99	6.5		
		10/4/94	0.5	10/4/95	1.3	10/4/96	6.1	10/8/97	4.1	10/10/98	4.5	10/13/99	5.2		
		10/5/94	0.7	10/5/95	2.2	10/5/96	5.2	10/9/97	3.2	10/11/98	3.9	10/14/99	4.6		
		10/6/94	0.2	10/6/95	1.1	10/6/96	5.1	10/10/97	2.6	10/12/98	4.0	10/15/99	6.7		

C-2. DAILY AVERAGE OPACITY FOR BETHLEHEM, BURNS HARBOR BATTERY 1

Date	Opacity	Date	Opacity	Date	Opacity	Date	Opacity	Date	Opacity	Date	Opacity	Date	Opacity	Date	Opacity
		10/7/94	0.6	10/7/95	1.7	10/7/96	4.3	10/11/97	3.3	10/13/98	3.0	10/16/99	6.7		
		10/8/94	3.8	10/8/95	0.9	10/8/96	4.5	10/12/97	3.7	10/14/98	2.9	10/17/99	4.4		
		10/9/94	1.9	10/9/95	1.7	10/9/96	3.5	10/13/97	2.2	10/15/98	4.2	10/18/99	4.3		
		10/10/94	9.5	10/10/95	1.0	10/10/96	2.9	10/14/97	1.3	10/16/98	4.8	10/19/99	4.7		
		10/11/94	3.3	10/11/95	2.8	10/11/96	5.7	10/15/97	4.7	10/17/98	3.8	10/20/99	4.1		
		10/12/94	10.4	10/12/95	3.7	10/12/96	7.0	10/16/97	2.5	10/18/98	3.0	10/21/99	5.1		
		10/13/94	11.0	10/13/95	2.7	10/13/96	7.9	10/17/97	4.5	10/19/98	2.8	10/22/99	5.0		
		10/14/94	13.5	10/14/95	0.5	10/14/96	6.9	10/18/97	2.8	10/20/98	2.8	10/23/99	4.2		
		10/15/94	8.0	10/15/95	1.5	10/15/96	5.5	10/19/97	3.3	10/21/98	3.1	10/24/99	4.9		
		10/16/94	6.1	10/16/95	1.0	10/16/96	6.9	10/20/97	2.9	10/22/98	2.9	10/25/99	5.7		
		10/17/94	3.3	10/17/95	0.7	10/17/96	3.0	10/21/97	2.8	10/23/98	2.8	10/26/99	5.7		
		10/18/94	3.7	10/18/95	0.9	10/18/96	13.4	10/22/97	2.0	10/24/98	3.4	10/27/99	6.0		
		10/19/94	3.0	10/19/95	2.1	10/19/96	5.0	10/23/97	7.7	10/25/98	3.1	10/28/99	7.1		
		10/20/94	7.2	10/20/95	3.4	10/20/96	6.6	10/24/97	2.9	10/26/98	4.1	10/29/99	8.7		
		10/21/94	5.0	10/21/95	3.6	10/21/96	7.6	10/25/97	2.2	10/27/98	3.8	10/30/99	8.3		
		10/22/94	4.5	10/22/95	1.7	10/22/96	5.8	10/26/97	4.1	10/28/98	3.1	10/31/99	6.9		
		10/23/94	1.8	10/23/95	1.5	10/23/96	3.3	10/27/97	1.6	10/29/98	3.3	11/1/99	6.6		
		10/24/94	2.9	10/24/95	1.4	10/24/96	4.6	10/28/97	1.0	10/30/98	3.6	11/2/99	2.7		
		10/25/94	5.3	10/25/95	7.6	10/25/96	6.3	10/29/97	2.3	11/1/98	2.2	11/3/99	3.2		
		10/26/94	4.8	10/26/95	2.8	10/26/96	5.4	10/30/97	2.2	11/2/98	1.6	11/4/99	4.6		
		10/27/94	7.2	10/27/95	5.0	10/27/96	3.5	11/1/97	2.5	11/3/98	1.5	11/5/99	5.7		
		10/28/94	4.7	10/28/95	10.8	10/28/96	3.4	11/2/97	1.4	11/4/98	1.6	11/6/99	4.9		
		10/29/94	4.5	10/29/95	11.1	10/29/96	1.9	11/3/97	0.8	11/5/98	2.2	11/7/99	4.9		
		10/30/94	6.7	10/30/95	7.8	10/30/96	1.8	11/4/97	0.6	11/6/98	2.7	11/8/99	6.6		
		10/31/94	11.9	10/31/95	5.3	11/1/96	2.2	11/5/97	1.5	11/7/98	2.8	11/9/99	8.5		
		11/1/94	6.1	11/1/95	4.4	11/2/96	2.3	11/6/97	1.3	11/8/98	2.7	11/10/99	7.6		
		11/2/94	5.4	11/2/95	5.6	11/3/96	2.5	11/7/97	1.5	11/9/98	2.3	11/11/99	5.6		
		11/3/94	10.0	11/3/95	4.3	11/4/96	2.5	11/8/97	1.6	11/10/98	2.1	11/12/99	4.9		
		11/4/94	4.4	11/4/95	5.4	11/5/96	4.0	11/9/97	3.6	11/11/98	1.8	11/13/99	6.7		
		11/5/94	8.6	11/5/95	2.4	11/6/96	5.4	11/10/97	1.2	11/12/98	2.4	11/14/99	4.5		
		11/6/94	7.0	11/6/95	3.7	11/7/96	3.3	11/11/97	1.0	11/13/98	2.7	11/15/99	3.9		

C-2. DAILY AVERAGE OPACITY FOR BETHLEHEM, BURNS HARBOR BATTERY 1

Date	Opacity	Date	Opacity	Date	Opacity	Date	Opacity	Date	Opacity	Date	Opacity	Date	Opacity	Date	Opacity
		11/7/94	6.5	11/7/95	5.8	11/8/96	3.8	11/12/97	1.4	11/14/98	2.5	11/16/99	2.8		
		11/8/94	8.6	11/8/95	1.8	11/9/96	1.4	11/13/97	2.6	11/15/98	2.4	11/17/99	3.6		
		11/9/94	1.1	11/9/95	3.0	11/10/96	1.7	11/14/97	1.9	11/16/98	2.7	11/18/99	5.2		
		11/10/94	2.1	11/10/95	1.6	11/11/96	2.3	11/15/97	3.0	11/17/98	3.2	11/19/99	4.4		
		11/11/94	4.7	11/11/95	6.6	11/12/96	2.8	11/16/97	4.4	11/18/98	2.6	11/20/99	1.8		
		11/12/94	5.7	11/12/95	1.5	11/13/96	2.2	11/17/97	4.9	11/19/98	2.7	11/21/99	1.4		
		11/13/94	2.6	11/13/95	2.2	11/14/96	1.5	11/18/97	4.2	11/20/98	3.3	11/22/99	2.1		
		11/14/94	2.5	11/14/95	7.5	11/15/96	4.1	11/19/97	1.9	11/21/98	2.5	11/23/99	2.4		
		11/15/94	2.1	11/15/95	8.1	11/16/96	3.3	11/20/97	1.2	11/22/98	2.2	11/24/99	1.7		
		11/16/94	10.8	11/16/95	8.6	11/17/96	2.5	11/21/97	0.9	11/23/98	2.9	11/25/99	1.1		
		11/17/94	12.5	11/17/95	4.9	11/18/96	3.5	11/22/97	2.9	11/24/98	3.6	11/26/99	1.1		
		11/18/94	29.0	11/18/95	2.7	11/19/96	2.7	11/23/97	4.2	11/25/98	3.2	11/27/99	1.1		
		11/19/94	22.2	11/19/95	2.9	11/20/96	2.6	11/24/97	1.5	11/26/98	3.5	11/28/99	1.9		
		11/20/94	11.0	11/20/95	2.4	11/21/96	2.1	11/25/97	1.2	11/27/98	4.0	11/29/99	1.4		
		11/21/94	1.6	11/21/95	5.1	11/22/96	2.7	11/26/97	0.8	11/28/98	3.4	11/30/99	0.9		
		11/22/94	0.6	11/22/95	5.8	11/23/96	2.2	11/27/97	1.2	11/29/98	3.0	12/1/99	0.6		
		11/23/94	1.1	11/23/95	7.4	11/24/96	2.4	11/28/97	1.4	11/30/98	2.5	12/2/99	0.8		
		11/24/94	1.5	11/24/95	11.4	11/25/96	3.2	11/29/97	1.0	12/1/98	3.0	12/3/99	1.3		
		11/25/94	0.2	11/25/95	13.0	11/26/96	2.6	12/1/97	0.7	12/2/98	2.4	12/4/99	1.1		
		11/26/94	1.6	11/26/95	9.3	11/27/96	2.8	12/2/97	1.0	12/3/98	3.1	12/5/99	0.4		
		11/27/94	0.4	11/27/95	10.2	11/28/96	2.8	12/3/97	1.6	12/4/98	3.5	12/6/99	0.2		
		11/28/94	0.3	11/28/95	5.1	11/29/96	2.3	12/4/97	1.7	12/5/98	2.9	12/7/99	1.0		
		11/29/94	2.2	11/29/95	3.2	12/1/96	3.5	12/5/97	1.1	12/6/98	3.2	12/8/99	0.2		
		12/1/94	1.8	11/30/95	5.0	12/2/96	3.0	12/6/97	0.8	12/7/98	2.8	12/9/99	0.3		
		12/2/94	4.5	12/1/95	1.9	12/3/96	2.8	12/7/97	0.7	12/8/98	3.5	12/10/99	0.2		
		12/3/94	8.9	12/2/95	1.7	12/4/96	3.7	12/8/97	0.5	12/9/98	3.3	12/11/99	0.2		
		12/4/94	6.0	12/3/95	0.4	12/5/96	4.8	12/9/97	0.6	12/10/98	3.1	12/12/99	0.4		
		12/5/94	13.7	12/4/95	0.3	12/6/96	3.4	12/10/97	1.0	12/11/98	3.0	12/13/99	0.6		
		12/6/94	12.9	12/5/95	0.2	12/7/96	3.4	12/11/97	1.2	12/12/98	2.7	12/14/99	0.4		
		12/7/94	20.9	12/6/95	5.0	12/8/96	3.3	12/12/97	3.1	12/13/98	3.3	12/15/99	0.3		
		12/8/94	3.7	12/7/95	10.1	12/9/96	3.5	12/13/97	1.0	12/14/98	3.1	12/16/99	0.4		

C-2. DAILY AVERAGE OPACITY FOR BETHLEHEM, BURNS HARBOR BATTERY 1

Date	Opacity	Date	Opacity	Date	Opacity	Date	Opacity	Date	Opacity	Date	Opacity	Date	Opacity	Date	Opacity
		12/9/94	7.4	12/8/95	8.0	12/10/96	2.5	12/14/97	1.7	12/15/98	2.8	12/17/99	0.2		
		12/10/94	2.7	12/9/95	28.5	12/11/96	9.4	12/15/97	1.1	12/16/98	3.6	12/18/99	0.2		
		12/11/94	1.7	12/10/95	26.8	12/12/96	3.2	12/16/97	2.0	12/17/98	2.8	12/19/99	0.5		
		12/12/94	1.9	12/11/95	16.8	12/13/96	3.3	12/17/97	2.1	12/18/98	2.7	12/20/99	0.4		
		12/13/94	2.3	12/12/95	8.4	12/14/96	3.6	12/18/97	1.6	12/19/98	3.1	12/21/99	0.5		
		12/14/94	2.1	12/13/95	8.3	12/15/96	4.0	12/19/97	9.1	12/20/98	2.8	12/22/99	0.2		
		12/15/94	2.7	12/14/95	8.5	12/16/96	5.6	12/20/97	7.0	12/21/98	2.9	12/23/99	0.4		
		12/16/94	6.1	12/15/95	9.1	12/17/96	6.9	12/21/97	3.0	12/22/98	3.3	12/24/99	0.2		
		12/17/94	4.6	12/16/95	9.2	12/18/96	4.5	12/22/97	1.6	12/23/98	3.1	12/25/99	0.2		
		12/18/94	3.9	12/17/95	8.4	12/19/96	4.9	12/23/97	1.2	12/24/98	3.5	12/26/99	0.3		
		12/19/94	2.6	12/18/95	8.1	12/20/96	3.7	12/24/97	1.2	12/25/98	2.9	12/27/99	0.4		
		12/20/94	2.4	12/19/95	9.5	12/21/96	3.8	12/25/97	1.1	12/26/98	2.9	12/28/99	0.4		
		12/21/94	3.5	12/20/95	8.6	12/22/96	5.4	12/26/97	2.5	12/27/98	2.5	12/29/99	0.3		
		12/22/94	4.6	12/21/95	9.6	12/23/96	4.4	12/27/97	2.2	12/28/98	3.7	12/30/99	0.4		
		12/23/94	9.4	12/22/95	9.6	12/24/96	4.8	12/28/97	3.3	12/29/98	3.7	12/31/99	0.2		
		12/24/94	16.8	12/23/95	8.9	12/25/96	7.6	12/29/97	2.2	12/30/98	4.5	1/1/00	0.5		
		12/25/94	16.3	12/24/95	8.4	12/26/96	2.9	12/30/97	5.6	1/1/99	4.8	1/2/00	0.4		
		12/26/94	21.2	12/25/95	11.8	12/27/96	2.6	12/31/97	7.9	1/2/99	3.5	1/3/00	0.2		
		12/27/94	19.0	12/26/95	8.0	12/28/96	2.1	1/1/98	6.1	1/3/99	3.0	1/4/00	0.3		
		12/28/94	12.8	12/27/95	8.7	12/29/96	4.5	1/2/98	1.9	1/4/99	3.3	1/5/00	0.4		
		12/29/94	8.4	12/28/95	8.5	12/30/96	5.4	1/3/98	1.4	1/5/99	3.9	1/6/00	0.4		
		12/30/94	7.9	12/29/95	7.7	12/31/96	4.3	1/4/98	1.8	1/6/99	1.9	1/7/00	0.3		
		12/31/94	10.8	12/30/95	8.0	12/31/96	3.6	1/5/98	2.5	1/7/99	3.1	1/8/00	0.5		
				12/31/95	8.5	12/31/96	3.5	1/6/98	2.2	1/8/99	2.8	1/9/00	0.3		
						12/31/96	3.2	1/7/98	2.7	1/9/99	6.3	1/10/00	0.6		

C-3. DAILY AVERAGE OPACITY FOR BETHLEHEM, BURNS HARBOR BATTERY 2

Date	Opacity	Date	Opacity	Date	Opacity	Date	Opacity	Date	Opacity	Date	Opacity	Date	Opacity
12/12/94	2.2	1/1/95	12.0	1/1/96	2.4	1/1/97	3.6	1/1/98	6.9	1/1/99	5.4	1/1/00	2.9
12/13/94	3.4	1/2/95	13.0	1/2/96	2.4	1/2/97	2.9	1/2/98	4.7	1/2/99	4.9	1/2/00	3.5
12/14/94	3.1	1/3/95	13.7	1/3/96	3.0	1/3/97	3.5	1/3/98	4.2	1/3/99	4.9	1/3/00	3.3
12/15/94	2.5	1/4/95	20.7	1/4/96	3.6	1/4/97	3.5	1/4/98	4.2	1/4/99	6.1	1/4/00	4.3
12/16/94	1.7	1/5/95	25.8	1/5/96	3.4	1/5/97	5.0	1/5/98	3.9	1/5/99	6.6	1/5/00	4.4
12/17/94	0.5	1/6/95	19.2	1/6/96	3.5	1/6/97	9.4	1/6/98	5.1	1/6/99	6.1	1/6/00	3.3
12/18/94	0.7	1/7/95	14.6	1/7/96	2.8	1/7/97	8.0	1/7/98	6.6	1/7/99	7.5	1/7/00	4.4
12/19/94	0.1	1/8/95	17.7	1/8/96	3.3	1/8/97	2.4	1/8/98	6.9	1/8/99	5.9	1/8/00	4.5
12/20/94	0.0	1/9/95	18.1	1/9/96	3.6	1/9/97	1.6	1/9/98	6.1	1/9/99	4.1	1/9/00	5.0
12/21/94	0.0	1/10/95	28.8	1/10/96	2.9	1/10/97	4.2	1/10/98	7.0	1/10/99	3.7	1/10/00	4.9
12/22/94	0.0	1/11/95	36.8	1/11/96	3.0	1/11/97	7.0	1/11/98	5.6	1/11/99	5.2	1/11/00	5.2
12/23/94	8.6	1/12/95	32.9	1/12/96	3.0	1/12/97	7.6	1/12/98	3.7	1/12/99	3.6	1/12/00	3.3
12/24/94	25.9	1/13/95	33.7	1/13/96	2.1	1/13/97	6.7	1/13/98	6.6	1/13/99	3.3	1/13/00	3.3
12/25/94	26.4	1/14/95	55.3	1/14/96	1.8	1/14/97	4.5	1/14/98	4.6	1/14/99	2.8	1/14/00	3.0
12/26/94	31.3	1/15/95	60.8	1/15/96	2.1	1/15/97	2.7	1/15/98	3.2	1/15/99	3.4	1/15/00	2.5
12/27/94	26.3	1/16/95	60.6	1/16/96	2.3	1/16/97	6.5	1/16/98	4.4	1/16/99	1.6	1/16/00	3.5
12/28/94	17.7	1/17/95	58.3	1/17/96	1.9	1/17/97	9.7	1/17/98	3.1	1/17/99	2.3	1/17/00	4.3
12/29/94	12.1	1/18/95	57.2	1/18/96	2.3	1/18/97	8.3	1/18/98	3.8	1/18/99	2.7	1/18/00	3.6
12/30/94	11.2	1/19/95	64.9	1/19/96	6.8	1/19/97	6.0	1/19/98	3.3	1/19/99	3.8	1/19/00	4.3
12/31/94	12.4	1/20/95	39.6	1/20/96	4.7	1/20/97	3.4	1/20/98	3.4	1/20/99	5.1	1/20/00	5.2
		1/21/95	38.8	1/21/96	2.9	1/21/97	2.3	1/21/98	3.4	1/21/99	2.8	1/21/00	4.1
		1/22/95	40.0	1/22/96	2.0	1/22/97	3.0	1/22/98	3.3	1/22/99	3.5	1/22/00	4.3
		1/23/95	30.9	1/23/96	2.3	1/23/97	4.1	1/23/98	3.2	1/23/99	5.0	1/23/00	3.4
		1/24/95	4.1	1/24/96	4.6	1/24/97	3.6	1/24/98	3.4	1/24/99	3.5	1/24/00	3.6
		1/25/95	6.9	1/25/96	4.3	1/25/97	5.2	1/25/98	3.4	1/25/99	3.2	1/25/00	4.7
		1/26/95	8.2	1/26/96	2.8	1/26/97	6.9	1/26/98	2.8	1/26/99	4.6	1/26/00	4.6
		1/27/95	10.7	1/27/96	5.1	1/27/97	5.2	1/27/98	2.7	1/27/99	4.3	1/27/00	4.5
		1/28/95	9.8	1/28/96	4.5	1/28/97	10.6	1/28/98	2.6	1/28/99	4.6	1/28/00	7.7
		1/29/95	9.4	1/29/96	4.1	1/29/97	7.9	1/29/98	2.7	1/29/99	5.4	1/29/00	7.2
		1/30/95	15.3	1/30/96	6.3	1/30/97	5.8	1/30/98	3.0	1/30/99	4.5	1/30/00	4.9

C-3. DAILY AVERAGE OPACITY FOR BETHLEHEM, BURNS HARBOR BATTERY 2

Date	Opacity	Date	Opacity	Date	Opacity	Date	Opacity	Date	Opacity	Date	Opacity	Date	Opacity
		1/31/95	10.8	1/31/96	9.3	1/31/97	3.8	1/31/98	2.5	1/31/99	5.0	1/31/00	5.3
		2/1/95	9.1	2/1/96	7.2	2/1/97	3.3	2/1/98	2.2	2/1/99	5.1	2/1/00	4.5
		2/2/95	6.4	2/2/96	11.2	2/2/97	3.1	2/2/98	3.1	2/2/99	4.6	2/2/00	3.3
		2/3/95	5.6	2/3/96	11.7	2/3/97	3.2	2/3/98	2.3	2/3/99	4.2	2/3/00	3.1
		2/4/95	16.2	2/4/96	8.7	2/4/97	3.1	2/4/98	2.3	2/4/99	2.9	2/4/00	5.1
		2/5/95	21.3	2/5/96	5.1	2/5/97	4.7	2/5/98	2.2	2/5/99	4.4	2/5/00	4.6
		2/6/95	16.7	2/6/96	2.2	2/6/97	3.5	2/6/98	3.0	2/6/99	4.6	2/6/00	5.2
		2/7/95	10.4	2/7/96	1.7	2/7/97	3.6	2/7/98	2.8	2/7/99	4.7	2/7/00	3.8
		2/8/95	10.7	2/8/96	1.4	2/8/97	3.7	2/8/98	2.8	2/8/99	5.2	2/8/00	3.4
		2/9/95	2.3	2/9/96	1.5	2/9/97	5.4	2/9/98	3.4	2/9/99	2.1	2/9/00	3.4
		2/10/95	0.8	2/10/96	1.2	2/10/97	4.0	2/10/98	2.7	2/10/99	3.5	2/10/00	3.8
		2/11/95	12.0	2/11/96	3.5	2/11/97	4.9	2/11/98	3.1	2/11/99	3.6	2/11/00	3.8
		2/12/95	10.8	2/12/96	4.5	2/12/97	5.6	2/12/98	2.2	2/12/99	5.5	2/12/00	2.3
		2/13/95	1.0	2/13/96	3.3	2/13/97	5.8	2/13/98	2.5	2/13/99	4.2	2/13/00	3.8
		2/14/95	2.0	2/14/96	3.5	2/14/97	4.9	2/14/98	2.1	2/14/99	3.6	2/14/00	4.4
		2/15/95	0.9	2/15/96	4.2	2/15/97	6.1	2/15/98	2.3	2/15/99	3.8	2/15/00	3.9
		2/16/95	0.4	2/16/96	3.8	2/16/97	4.9	2/16/98	2.4	2/16/99	3.8	2/16/00	3.2
		2/17/95	0.7	2/17/96	4.0	2/17/97	4.0	2/17/98	2.3	2/17/99	4.0	2/17/00	3.5
		2/18/95	1.0	2/18/96	3.8	2/18/97	2.1	2/18/98	1.9	2/18/99	3.2	2/18/00	4.6
		2/19/95	0.5	2/19/96	1.6	2/19/97	3.0	2/19/98	2.6	2/19/99	2.9	2/19/00	3.7
		2/20/95	3.2	2/20/96	1.4	2/20/97	3.0	2/20/98	2.9	2/20/99	3.0	2/20/00	3.0
		2/21/95	8.9	2/21/96	1.9	2/21/97	4.7	2/21/98	3.1	2/21/99	2.8	2/21/00	2.7
		2/22/95	6.7	2/22/96	1.9	2/22/97	7.9	2/22/98	2.7	2/22/99	3.3	2/22/00	1.9
		2/23/95	6.8	2/23/96	1.5	2/23/97	7.0	2/23/98	3.4	2/23/99	3.4	2/23/00	0.8
		2/24/95	0.4	2/24/96	1.6	2/24/97	7.8	2/24/98	2.9	2/24/99	3.5	2/24/00	1.5
		2/25/95	0.6	2/25/96	1.1	2/25/97	6.4	2/25/98	3.2	2/25/99	3.0	2/25/00	1.0
		2/26/95	2.1	2/26/96	1.6	2/26/97	3.0	2/26/98	3.0	2/26/99	2.9	2/26/00	1.3
		2/27/95	1.0	2/27/96	1.1	2/27/97	3.7	2/27/98	2.9	2/27/99	3.4	2/27/00	1.0
		2/28/95	0.5	2/28/96	4.4	2/28/97	2.8	2/28/98	2.9	2/28/99	3.6	2/28/00	0.8
		3/1/95	1.9	2/29/96	5.7	3/1/97	2.1	3/1/98	2.7	3/1/99	2.2	2/29/00	1.2
		3/2/95	0.8	3/1/96	3.3	3/2/97	3.4	3/2/98	2.7	3/2/99	2.9	3/1/00	1.4

C-3. DAILY AVERAGE OPACITY FOR BETHLEHEM, BURNS HARBOR BATTERY 2

Date	Opacity	Date	Opacity	Date	Opacity	Date	Opacity	Date	Opacity	Date	Opacity	Date	Opacity
		3/3/95	1.8	3/2/96	3.6	3/3/97	3.4	3/3/98	2.4	3/3/99	3.4	3/2/00	2.7
		3/4/95	1.3	3/3/96	6.1	3/4/97	1.9	3/4/98	2.5	3/4/99	2.2	3/3/00	1.8
		3/5/95	2.9	3/4/96	2.6	3/5/97	2.3	3/5/98	2.5	3/5/99	4.0	3/4/00	1.7
		3/6/95	1.7	3/5/96	2.1	3/6/97	3.9	3/6/98	2.6	3/6/99	4.1	3/5/00	1.0
		3/7/95	26.9	3/6/96	2.2	3/7/97	2.9	3/7/98	2.7	3/7/99	3.4	3/6/00	0.8
		3/8/95	3.9	3/7/96	2.8	3/8/97	2.6	3/8/98	2.5	3/8/99	4.7	3/7/00	0.7
		3/9/95	2.8	3/8/96	5.3	3/9/97	2.3	3/9/98	3.6	3/9/99	3.7	3/8/00	0.7
		3/10/95	1.2	3/9/96	3.5	3/10/97	2.2	3/10/98	3.6	3/10/99	2.7	3/9/00	2.3
		3/11/95	0.2	3/10/96	1.7	3/11/97	2.9	3/11/98	3.4	3/11/99	2.6	3/10/00	3.9
		3/12/95	0.4	3/11/96	1.1	3/12/97	2.8	3/12/98	4.3	3/12/99	2.7	3/11/00	3.5
		3/13/95	1.3	3/12/96	0.9	3/13/97	2.5	3/13/98	2.9	3/13/99	2.2	3/12/00	2.3
		3/14/95	2.3	3/13/96	1.0	3/14/97	3.0	3/14/98	3.9	3/14/99	2.2	3/13/00	2.9
		3/15/95	1.2	3/14/96	1.0	3/15/97	5.4	3/15/98	2.8	3/15/99	1.5	3/14/00	3.0
		3/16/95	0.7	3/15/96	1.3	3/16/97	4.2	3/16/98	3.2	3/16/99	1.2	3/15/00	2.9
		3/17/95	0.6	3/16/96	4.1	3/17/97	2.8	3/17/98	2.5	3/17/99	1.5	3/16/00	2.9
		3/18/95	0.3	3/17/96	2.5	3/18/97	2.8	3/18/98	2.4	3/18/99	1.5	3/17/00	2.2
		3/19/95	0.1	3/18/96	1.8	3/19/97	3.4	3/19/98	2.5	3/19/99	1.5	3/18/00	2.8
		3/20/95	2.6	3/19/96	2.1	3/20/97	3.0	3/20/98	2.7	3/20/99	1.5	3/19/00	3.1
		3/21/95	4.4	3/20/96	3.7	3/21/97	2.7	3/21/98	3.0	3/21/99	1.5	3/20/00	2.5
		3/22/95	5.0	3/21/96	3.6	3/22/97	2.6	3/22/98	4.2	3/22/99	1.3	3/21/00	1.7
		3/23/95	4.6	3/22/96	3.3	3/23/97	2.9	3/23/98	3.4	3/23/99	1.1	3/22/00	1.1
		3/24/95	4.4	3/23/96	2.2	3/24/97	2.7	3/24/98	3.9	3/24/99	0.2	3/23/00	1.0
		3/25/95	5.0	3/24/96	1.3	3/25/97	2.6	3/25/98	2.6	3/25/99	5.2	3/24/00	2.2
		3/26/95	5.3	3/25/96	3.5	3/26/97	3.0	3/26/98	3.7	3/26/99	3.5	3/25/00	1.2
		3/27/95	5.2	3/26/96	5.0	3/27/97	2.4	3/27/98	3.6	3/27/99	2.3	3/26/00	0.6
		3/28/95	2.2	3/27/96	3.6	3/28/97	2.7	3/28/98	3.5	3/28/99	3.0	3/27/00	0.7
		3/29/95	2.6	3/28/96	2.1	3/29/97	3.0	3/29/98	4.0	3/29/99	2.8	3/28/00	1.3
		3/30/95	4.4	3/29/96	1.9	3/30/97	3.9	3/30/98	3.9	3/30/99	3.5	3/29/00	1.0
		3/31/95	3.0	3/30/96	2.0	3/31/97	4.2	3/31/98	3.6	3/31/99	3.0	3/30/00	0.8
		4/1/95	2.4	3/31/96	2.3	4/1/97	2.9	4/1/98	3.1	4/1/99	3.3	3/31/00	1.2
		4/2/95	2.8	4/1/96	2.3	4/2/97	2.2	4/2/98	3.8	4/2/99	3.2	4/1/00	2.1

C-3. DAILY AVERAGE OPACITY FOR BETHLEHEM, BURNS HARBOR BATTERY 2

Date	Opacity	Date	Opacity	Date	Opacity	Date	Opacity	Date	Opacity	Date	Opacity	Date	Opacity
		4/3/95	4.1	4/2/96	1.3	4/3/97	2.5	4/3/98	4.0	4/3/99	4.0	4/2/00	2.5
		4/4/95	1.5	4/3/96	0.9	4/4/97	2.4	4/4/98	4.6	4/4/99	3.6	4/3/00	1.7
		4/5/95	1.3	4/4/96	2.4	4/5/97	2.5	4/5/98	4.6	4/5/99	4.6	4/4/00	2.0
		4/6/95	5.1	4/5/96	2.2	4/6/97	2.5	4/6/98	4.4	4/6/99	4.6	4/5/00	1.6
		4/7/95	5.3	4/6/96	2.1	4/7/97	4.6	4/7/98	4.5	4/7/99	2.6	4/6/00	1.7
		4/8/95	5.3	4/7/96	1.9	4/8/97	3.9	4/8/98	3.8	4/8/99	3.2	4/7/00	2.2
		4/9/95	4.3	4/8/96	1.8	4/9/97	5.3	4/9/98	3.6	4/9/99	6.0	4/8/00	1.5
		4/10/95	4.2	4/9/96	1.9	4/10/97	4.5	4/10/98	4.2	4/10/99	5.0	4/9/00	1.2
		4/11/95	5.6	4/10/96	1.1	4/11/97	3.9	4/11/98	4.9	4/11/99	5.0	4/10/00	2.7
		4/12/95	4.1	4/11/96	0.7	4/12/97	3.6	4/12/98	4.2	4/12/99	3.9	4/11/00	1.9
		4/13/95	3.1	4/12/96	1.3	4/13/97	4.0	4/13/98	4.1	4/13/99	3.8	4/12/00	1.3
		4/14/95	3.9	4/13/96	1.4	4/14/97	3.5	4/14/98	4.1	4/14/99	4.1	4/13/00	1.8
		4/15/95	6.0	4/14/96	1.4	4/15/97	3.2	4/15/98	5.1	4/15/99	4.5	4/14/00	1.4
		4/16/95	7.6	4/15/96	1.5	4/16/97	3.8	4/16/98	4.0	4/16/99	4.4	4/15/00	2.0
		4/17/95	6.7	4/16/96	1.1	4/17/97	3.7	4/17/98	4.5	4/17/99	4.5	4/16/00	2.8
		4/18/95	9.0	4/17/96	0.9	4/18/97	4.0	4/18/98	4.6	4/18/99	4.6	4/17/00	2.9
		4/19/95	8.6	4/18/96	0.7	4/19/97	3.5	4/19/98	4.7	4/19/99	3.9	4/18/00	2.9
		4/20/95	11.4	4/19/96	0.7	4/20/97	3.7	4/20/98	4.0	4/20/99	3.2	4/19/00	4.3
		4/21/95	11.6	4/20/96	0.3	4/21/97	3.5	4/21/98	3.3	4/21/99	2.8	4/20/00	4.2
		4/22/95	11.5	4/21/96	0.3	4/22/97	3.5	4/22/98	4.4	4/22/99	3.0	4/21/00	4.3
		4/23/95	12.3	4/22/96	0.9	4/23/97	3.6	4/23/98	5.4	4/23/99	4.5	4/22/00	1.0
		4/24/95	10.6	4/23/96	0.6	4/24/97	3.4	4/24/98	5.4	4/24/99	3.9	4/23/00	1.5
		4/25/95	6.9	4/24/96	0.6	4/25/97	4.0	4/25/98	5.1	4/25/99	3.5	4/24/00	1.0
		4/26/95	8.0	4/25/96	0.8	4/26/97	3.9	4/26/98	4.0	4/26/99	2.7	4/25/00	1.1
		4/27/95	5.9	4/26/96	1.2	4/27/97	3.7	4/27/98	4.9	4/27/99	2.7	4/26/00	1.1
		4/28/95	6.7	4/27/96	1.4	4/28/97	3.9	4/28/98	5.0	4/28/99	2.4	4/27/00	0.9
		4/29/95	7.7	4/28/96	1.5	4/29/97	3.4	4/29/98	4.5	4/29/99	1.8	4/28/00	1.2
		4/30/95	4.9	4/29/96	1.7	4/30/97	3.8	4/30/98	4.8	4/30/99	1.8	4/29/00	2.1
		5/1/95	6.6	4/30/96	0.2	5/1/97	4.7	5/1/98	4.4	5/1/99	1.5	4/30/00	1.3
		5/2/95	6.0	5/1/96	0.1	5/2/97	3.7	5/2/98	4.8	5/2/99	1.3	5/1/00	1.7
		5/3/95	7.8	5/2/96	0.2	5/3/97	3.8	5/3/98	4.3	5/3/99	2.5	5/2/00	1.3

C-3. DAILY AVERAGE OPACITY FOR BETHLEHEM, BURNS HARBOR BATTERY 2

Date	Opacity	Date	Opacity	Date	Opacity	Date	Opacity	Date	Opacity	Date	Opacity	Date	Opacity
		5/4/95	7.2	5/3/96	0.2	5/4/97	4.1	5/4/98	4.9	5/4/99	3.3	5/3/00	1.1
		5/5/95	7.4	5/4/96	0.1	5/5/97	3.6	5/5/98	4.7	5/5/99	3.4	5/4/00	1.1
		5/6/95	9.7	5/5/96	0.3	5/6/97	4.1	5/6/98	3.8	5/6/99	3.9	5/5/00	1.1
		5/7/95	12.0	5/6/96	0.3	5/7/97	3.8	5/7/98	3.2	5/7/99	5.0	5/6/00	0.9
		5/8/95	10.8	5/7/96	0.5	5/8/97	3.8	5/8/98	4.6	5/8/99	3.4	5/7/00	0.9
		5/9/95	11.0	5/8/96	0.5	5/9/97	3.6	5/9/98	5.2	5/9/99	3.0	5/8/00	0.8
		5/10/95	9.5	5/9/96	0.5	5/10/97	3.8	5/10/98	5.5	5/10/99	4.0	5/9/00	1.4
		5/11/95	9.9	5/10/96	0.1	5/11/97	3.8	5/11/98	5.3	5/11/99	3.6	5/10/00	1.2
		5/12/95	6.1	5/11/96	0.1	5/12/97	3.9	5/12/98	5.0	5/12/99	3.3	5/11/00	1.2
		5/13/95	3.0	5/12/96	0.2	5/13/97	4.1	5/13/98	6.0	5/13/99	3.4	5/12/00	0.9
		5/14/95	2.9	5/13/96	0.4	5/14/97	4.0	5/14/98	5.7	5/14/99	3.1	5/13/00	1.0
		5/15/95	4.1	5/14/96	0.5	5/15/97	3.8	5/15/98	5.0	5/15/99	4.5	5/14/00	0.6
		5/16/95	6.6	5/15/96	1.0	5/16/97	4.0	5/16/98	5.6	5/16/99	5.8	5/15/00	0.8
		5/17/95	7.9	5/16/96	0.8	5/17/97	4.4	5/17/98	6.7	5/17/99	5.1	5/16/00	2.2
		5/18/95	9.7	5/17/96	0.5	5/18/97	4.0	5/18/98	5.7	5/18/99	3.4	5/17/00	2.9
		5/19/95	6.8	5/18/96	0.3	5/19/97	4.1	5/19/98	4.5	5/19/99	3.0	5/18/00	1.2
		5/20/95	2.8	5/19/96	0.0	5/20/97	4.2	5/20/98	3.8	5/20/99	3.3	5/19/00	1.3
		5/21/95	2.6	5/20/96	0.1	5/21/97	4.1	5/21/98	3.3	5/21/99	3.9	5/20/00	1.0
		5/22/95	5.6	5/21/96	0.8	5/22/97	4.2	5/22/98	2.8	5/22/99	4.3	5/21/00	1.1
		5/23/95	8.4	5/22/96	2.6	5/23/97	4.1	5/23/98	3.2	5/23/99	5.2	5/22/00	1.0
		5/24/95	13.2	5/23/96	2.9	5/24/97	5.2	5/24/98	2.6	5/24/99	8.7	5/23/00	0.6
		5/25/95	7.6	5/24/96	3.0	5/25/97	4.2	5/25/98	2.4	5/25/99	5.0	5/24/00	0.9
		5/26/95	6.4	5/25/96	3.0	5/26/97	4.8	5/26/98	2.7	5/26/99	4.6	5/25/00	1.2
		5/27/95	11.2	5/26/96	2.9	5/27/97	4.1	5/27/98	2.8	5/27/99	3.1	5/26/00	1.2
		5/28/95	7.0	5/27/96	3.0	5/28/97	4.6	5/28/98	2.6	5/28/99	2.9	5/27/00	1.5
		5/29/95	8.3	5/28/96	3.2	5/29/97	4.5	5/29/98	2.7	5/29/99	2.7	5/28/00	1.5
		5/30/95	5.6	5/29/96	2.8	5/30/97	4.6	5/30/98	2.9	5/30/99	3.9	5/29/00	1.4
		5/31/95	4.1	5/30/96	2.9	5/31/97	4.4	5/31/98	2.9	5/31/99	5.1	5/30/00	1.4
		6/1/95	3.7	5/31/96	2.7	6/1/97	4.2	6/1/98	3.2	6/1/99	3.5	5/31/00	1.5
		6/2/95	8.5	6/1/96	2.9	6/2/97	4.2	6/2/98	3.2	6/2/99	4.1	6/1/00	0.9
		6/3/95	5.9	6/2/96	3.1	6/3/97	4.1	6/3/98	2.7	6/3/99	2.8	6/2/00	1.1

C-3. DAILY AVERAGE OPACITY FOR BETHLEHEM, BURNS HARBOR BATTERY 2

Date	Opacity	Date	Opacity	Date	Opacity	Date	Opacity	Date	Opacity	Date	Opacity	Date	Opacity
		6/4/95	5.4	6/3/96	2.9	6/4/97	4.1	6/4/98	2.4	6/4/99	3.5	6/3/00	1.1
		6/5/95	4.6	6/4/96	2.8	6/5/97	4.0	6/5/98	2.7	6/5/99	3.9	6/4/00	1.2
		6/6/95	6.6	6/5/96	2.9	6/6/97	4.3	6/6/98	2.6	6/6/99	1.6	6/5/00	1.2
		6/7/95	6.2	6/6/96	3.0	6/7/97	4.1	6/7/98	3.3	6/7/99	1.4	6/6/00	1.3
		6/8/95	14.8	6/7/96	3.3	6/8/97	4.2	6/8/98	2.5	6/8/99	1.5	6/7/00	1.2
		6/9/95	2.9	6/8/96	3.2	6/9/97	4.2	6/9/98	2.2	6/9/99	2.5	6/8/00	1.2
		6/10/95	4.3	6/9/96	3.1	6/10/97	4.5	6/10/98	3.1	6/10/99	1.7	6/9/00	1.4
		6/11/95	3.5	6/10/96	3.1	6/11/97	4.0	6/11/98	2.1	6/11/99	2.3	6/10/00	1.1
		6/12/95	3.3	6/11/96	3.1	6/12/97	3.8	6/12/98	3.0	6/12/99	2.3	6/11/00	1.0
		6/13/95	4.9	6/12/96	3.0	6/13/97	3.5	6/13/98	3.9	6/13/99	2.2	6/12/00	0.9
		6/14/95	6.0	6/13/96	3.1	6/14/97	3.2	6/14/98	3.9	6/14/99	2.2	6/13/00	0.9
		6/15/95	6.3	6/14/96	3.1	6/15/97	3.2	6/15/98	4.2	6/15/99	3.0	6/14/00	1.4
		6/16/95	6.0	6/15/96	3.4	6/16/97	3.6	6/16/98	3.0	6/16/99	2.9	6/15/00	1.3
		6/17/95	6.4	6/16/96	3.3	6/17/97	3.3	6/17/98	3.5	6/17/99	2.4	6/16/00	1.6
		6/18/95	7.5	6/17/96	3.1	6/18/97	3.4	6/18/98	3.8	6/18/99	2.7	6/17/00	1.3
		6/19/95	8.7	6/18/96	8.7	6/19/97	3.6	6/19/98	3.3	6/19/99	2.7	6/18/00	0.6
		6/20/95	8.4	6/19/96	4.2	6/20/97	3.5	6/20/98	3.5	6/20/99	2.7	6/19/00	0.6
		6/21/95	9.3	6/20/96	3.9	6/21/97	3.6	6/21/98	3.7	6/21/99	2.1	6/20/00	1.0
		6/22/95	9.7	6/21/96	3.8	6/22/97	3.5	6/22/98	3.4	6/22/99	2.2	6/21/00	0.6
		6/23/95	11.8	6/22/96	3.6	6/23/97	3.8	6/23/98	3.8	6/23/99	2.9	6/22/00	0.4
		6/24/95	12.8	6/23/96	3.6	6/24/97	3.6	6/24/98	3.9	6/24/99	2.7	6/23/00	0.7
		6/25/95	14.0	6/24/96	3.8	6/25/97	3.6	6/25/98	3.3	6/25/99	2.6	6/24/00	1.4
		6/26/95	13.2	6/25/96	3.6	6/26/97	3.7	6/26/98	3.9	6/26/99	2.7	6/25/00	0.5
		6/27/95	10.2	6/26/96	3.7	6/27/97	3.5	6/27/98	3.6	6/27/99	3.3	6/26/00	0.8
		6/28/95	8.6	6/27/96	3.8	6/28/97	3.6	6/28/98	3.7	6/28/99	4.0	6/27/00	0.8
		6/29/95	8.1	6/28/96	3.8	6/29/97	3.7	6/29/98	3.4	6/29/99	3.2	6/28/00	1.0
		7/4/95	7.1	6/29/96	3.8	6/30/97	8.6	6/30/98	3.7	6/30/99	2.9	6/29/00	0.8
		7/5/95	6.4	6/30/96	3.8	7/1/97	2.1	7/1/98	4.5	7/1/99	3.1	6/30/00	0.9
		7/6/95	6.0	7/1/96	3.7	7/2/97	2.1	7/2/98	4.1	7/2/99	2.3	7/1/00	0.8
		7/7/95	6.3	7/2/96	3.7	7/3/97	2.0	7/3/98	3.2	7/3/99	2.2	7/2/00	0.7
		7/8/95	8.6	7/3/96	3.7	7/4/97	2.1	7/4/98	2.7	7/4/99	1.7	7/3/00	1.6

C-3. DAILY AVERAGE OPACITY FOR BETHLEHEM, BURNS HARBOR BATTERY 2

Date	Opacity	Date	Opacity	Date	Opacity	Date	Opacity	Date	Opacity	Date	Opacity	Date	Opacity
		7/9/95	7.3	7/4/96	4.0	7/5/97	2.3	7/5/98	4.0	7/5/99	1.4	7/4/00	1.8
		7/10/95	7.0	7/5/96	3.8	7/6/97	2.2	7/6/98	2.9	7/6/99	1.7	7/5/00	0.9
		7/11/95	5.6	7/6/96	3.9	7/7/97	2.6	7/7/98	2.9	7/7/99	2.0	7/6/00	0.4
		7/12/95	4.4	7/7/96	4.3	7/8/97	4.9	7/8/98	3.1	7/8/99	2.2	7/7/00	0.9
		7/13/95	4.4	7/8/96	4.5	7/9/97	4.1	7/9/98	3.7	7/9/99	2.9	7/8/00	0.7
		7/14/95	5.3	7/9/96	4.1	7/10/97	2.6	7/10/98	4.0	7/10/99	3.1	7/9/00	0.5
		7/15/95	7.3	7/10/96	4.1	7/11/97	3.1	7/11/98	3.6	7/11/99	3.3	7/10/00	0.8
		7/16/95	5.9	7/11/96	4.0	7/12/97	2.9	7/12/98	3.4	7/12/99	2.6	7/11/00	0.6
		7/17/95	4.9	7/12/96	4.4	7/13/97	3.9	7/13/98	3.4	7/13/99	3.1	7/12/00	0.4
		7/18/95	4.1	7/13/96	3.9	7/14/97	3.6	7/14/98	3.9	7/14/99	2.9	7/13/00	0.6
		7/19/95	4.3	7/14/96	4.2	7/15/97	3.1	7/15/98	3.5	7/15/99	2.3	7/14/00	0.3
		7/20/95	4.8	7/15/96	4.2	7/16/97	3.2	7/16/98	4.2	7/16/99	3.3	7/15/00	0.3
		7/21/95	3.6	7/16/96	3.9	7/17/97	2.5	7/17/98	3.9	7/17/99	4.0	7/16/00	0.3
		7/22/95	3.4	7/17/96	3.9	7/18/97	3.7	7/18/98	3.8	7/18/99	4.4	7/17/00	0.2
		7/23/95	3.7	7/18/96	4.2	7/19/97	3.5	7/19/98	3.2	7/19/99	5.3	7/18/00	0.3
		7/24/95	1.5	7/19/96	3.9	7/20/97	3.4	7/20/98	4.4	7/20/99	3.8	7/19/00	0.4
		7/25/95	2.8	7/20/96	3.5	7/21/97	4.3	7/21/98	3.9	7/21/99	1.6	7/20/00	0.3
		7/26/95	2.9	7/21/96	3.7	7/22/97	4.0	7/22/98	4.3	7/22/99	1.2	7/21/00	0.4
		7/27/95	2.6	7/22/96	3.8	7/23/97	3.9	7/23/98	4.0	7/23/99	1.1	7/22/00	0.3
		7/28/95	3.2	7/23/96	3.8	7/24/97	2.4	7/24/98	4.1	7/24/99	1.0	7/23/00	0.3
		7/29/95	3.2	7/24/96	3.6	7/25/97	2.4	7/25/98	3.8	7/25/99	1.0	7/24/00	0.4
		7/30/95	2.7	7/25/96	4.2	7/26/97	2.6	7/26/98	4.0	7/26/99	1.3	7/25/00	0.5
		7/31/95	2.8	7/26/96	3.8	7/27/97	2.9	7/27/98	3.9	7/27/99	1.3	7/26/00	0.5
		8/1/95	2.4	7/27/96	4.3	7/28/97	3.1	7/28/98	4.5	7/28/99	1.0	7/27/00	0.5
		8/2/95	2.6	7/28/96	5.1	7/29/97	3.0	7/29/98	4.9	7/29/99	1.2	7/28/00	1.2
		8/3/95	5.7	7/29/96	5.0	7/30/97	3.0	7/30/98	3.8	7/30/99	0.9	7/29/00	0.5
		8/4/95	4.5	7/30/96	4.6	7/31/97	2.7	7/31/98	4.6	7/31/99	2.0	7/30/00	0.7
		8/5/95	4.1	7/31/96	1.7	8/1/97	2.8	8/1/98	3.8	8/1/99	1.3	7/31/00	0.4
		8/6/95	3.5	8/1/96	1.8	8/2/97	2.5	8/2/98	4.0	8/2/99	1.3	8/1/00	0.1
		8/7/95	2.9	8/2/96	1.8	8/3/97	2.6	8/3/98	3.5	8/3/99	1.2	8/2/00	0.5
		8/8/95	3.1	8/3/96	2.2	8/4/97	2.9	8/4/98	2.9	8/4/99	2.1	8/3/00	0.6

C-3. DAILY AVERAGE OPACITY FOR BETHLEHEM, BURNS HARBOR BATTERY 2

Date	Opacity	Date	Opacity	Date	Opacity	Date	Opacity	Date	Opacity	Date	Opacity	Date	Opacity
		8/9/95	3.4	8/4/96	1.5	8/5/97	3.0	8/5/98	3.0	8/5/99	1.9	8/4/00	0.9
		8/10/95	3.9	8/5/96	1.6	8/6/97	3.0	8/6/98	3.1	8/6/99	2.5	8/5/00	0.5
		8/11/95	3.7	8/6/96	1.7	8/7/97	2.6	8/7/98	3.3	8/7/99	3.6	8/6/00	0.6
		8/12/95	3.8	8/7/96	1.7	8/8/97	2.9	8/8/98	3.8	8/8/99	2.6	8/7/00	0.4
		8/13/95	4.1	8/8/96	1.6	8/9/97	3.1	8/9/98	4.4	8/9/99	2.3	8/8/00	0.3
		8/14/95	3.8	8/9/96	1.8	8/10/97	2.8	8/10/98	4.7	8/10/99	2.1	8/9/00	0.5
		8/15/95	3.9	8/10/96	1.9	8/11/97	3.1	8/11/98	5.1	8/11/99	2.7	8/10/00	0.2
		8/16/95	3.6	8/11/96	2.1	8/12/97	3.2	8/12/98	4.8	8/12/99	3.0	8/11/00	0.3
		8/17/95	4.1	8/12/96	2.0	8/13/97	3.8	8/13/98	4.6	8/13/99	2.7	8/12/00	0.2
		8/18/95	3.3	8/13/96	1.9	8/14/97	3.2	8/14/98	4.8	8/14/99	1.9	8/13/00	0.3
		8/19/95	3.2	8/14/96	2.0	8/15/97	3.7	8/15/98	4.5	8/15/99	1.9	8/14/00	0.3
		8/20/95	3.0	8/15/96	2.0	8/16/97	4.2	8/16/98	5.1	8/16/99	1.9	8/15/00	0.4
		8/21/95	3.8	8/16/96	2.1	8/17/97	4.6	8/17/98	5.1	8/17/99	1.7	8/16/00	0.7
		8/22/95	3.1	8/17/96	2.2	8/18/97	6.0	8/18/98	5.6	8/18/99	3.0	8/17/00	0.7
		8/23/95	2.2	8/18/96	2.3	8/19/97	5.1	8/19/98	4.9	8/19/99	3.2	8/18/00	1.3
		8/24/95	2.3	8/19/96	2.2	8/20/97	7.2	8/20/98	4.4	8/20/99	2.1	8/19/00	0.2
		8/25/95	2.1	8/20/96	2.2	8/21/97	6.2	8/21/98	5.2	8/21/99	1.7	8/20/00	0.4
		8/26/95	2.1	8/21/96	2.5	8/22/97	4.2	8/22/98	5.7	8/22/99	0.4	8/21/00	0.8
		8/27/95	2.3	8/22/96	2.2	8/23/97	4.0	8/23/98	5.0	8/23/99	2.4	8/22/00	1.0
		8/28/95	2.2	8/23/96	1.9	8/24/97	4.3	8/24/98	5.4	8/24/99	3.5	8/23/00	0.4
		8/29/95	3.2	8/24/96	2.3	8/25/97	4.0	8/25/98	6.0	8/25/99	3.1	8/24/00	0.7
		8/30/95	1.8	8/25/96	2.0	8/26/97	3.8	8/26/98	5.5	8/26/99	1.9	8/25/00	0.2
		8/31/95	2.2	8/26/96	2.4	8/27/97	3.8	8/27/98	4.0	8/27/99	1.4	8/26/00	0.7
		9/1/95	2.0	8/27/96	2.3	8/28/97	3.2	8/28/98	3.7	8/28/99	1.2	8/27/00	0.7
		9/2/95	1.7	8/28/96	2.6	8/29/97	2.4	8/29/98	4.9	8/29/99	1.5	8/28/00	0.5
		9/3/95	1.9	8/29/96	3.0	8/30/97	2.4	8/30/98	4.9	8/30/99	1.8	8/29/00	0.5
		9/4/95	3.7	8/30/96	2.9	8/31/97	2.8	8/31/98	4.5	8/31/99	2.0	8/30/00	0.6
		9/5/95	2.5	8/31/96	2.7	9/1/97	3.0	9/1/98	3.5	9/1/99	2.3	8/31/00	0.5
		9/6/95	1.4	9/1/96	2.7	9/2/97	2.7	9/2/98	5.0	9/2/99	1.8		
		9/7/95	2.2	9/2/96	2.8	9/3/97	2.8	9/3/98	4.6	9/3/99	2.3		
		9/8/95	2.6	9/3/96	3.7	9/4/97	2.9	9/4/98	5.5	9/4/99	2.4		

C-3. DAILY AVERAGE OPACITY FOR BETHLEHEM, BURNS HARBOR BATTERY 2

Date	Opacity	Date	Opacity	Date	Opacity	Date	Opacity	Date	Opacity	Date	Opacity	Date	Opacity
		9/9/95	2.2	9/4/96	3.9	9/5/97	3.5	9/5/98	4.4	9/5/99	2.2		
		9/10/95	2.3	9/5/96	5.6	9/6/97	3.3	9/6/98	4.6	9/6/99	2.2		
		9/11/95	2.2	9/6/96	5.0	9/7/97	3.7	9/7/98	4.5	9/7/99	2.2		
		9/12/95	1.9	9/7/96	5.0	9/8/97	3.3	9/8/98	3.9	9/8/99	3.0		
		9/13/95	1.9	9/8/96	4.4	9/9/97	3.2	9/9/98	4.5	9/9/99	2.5		
		9/14/95	1.5	9/9/96	4.1	9/10/97	3.6	9/10/98	4.5	9/10/99	3.3		
		9/15/95	1.8	9/10/96	4.1	9/11/97	3.7	9/11/98	4.7	9/11/99	2.3		
		9/16/95	1.2	9/11/96	5.1	9/12/97	4.1	9/12/98	5.3	9/12/99	2.4		
		9/17/95	1.0	9/12/96	5.4	9/13/97	3.0	9/13/98	4.7	9/13/99	1.9		
		9/18/95	1.3	9/13/96	5.3	9/14/97	2.8	9/14/98	4.0	9/14/99	2.1		
		9/19/95	2.0	9/14/96	4.9	9/15/97	3.2	9/17/98	3.8	9/15/99	3.0		
		9/20/95	2.2	9/15/96	4.7	9/16/97	3.0	9/18/98	4.6	9/16/99	3.1		
		9/21/95	3.9	9/16/96	4.5	9/17/97	3.2	9/19/98	4.7	9/17/99	3.0		
		9/22/95	3.7	9/17/96	5.4	9/18/97	2.6	9/20/98	5.1	9/18/99	1.9		
		9/23/95	2.9	9/18/96	5.1	9/19/97	3.3	9/21/98	5.3	9/19/99	3.0		
		9/24/95	3.0	9/19/96	4.6	9/20/97	3.3	9/22/98	6.1	9/20/99	3.4		
		9/25/95	2.3	9/20/96	3.9	9/21/97	3.1	9/23/98	6.0	9/21/99	2.0		
		9/26/95	1.9	9/21/96	4.2	9/22/97	3.4	9/24/98	6.5	9/22/99	1.6		
		9/27/95	1.3	9/22/96	4.0	9/23/97	3.9	9/25/98	5.6	9/23/99	1.4		
		9/28/95	1.3	9/23/96	3.3	9/24/97	3.6	9/26/98	4.6	9/24/99	2.4		
		9/29/95	2.6	9/24/96	2.9	9/25/97	4.4	9/27/98	4.5	9/25/99	2.4		
		9/30/95	2.7	9/25/96	2.6	9/26/97	4.1	9/28/98	4.5	9/26/99	2.4		
		10/1/95	2.9	9/26/96	3.0	9/27/97	2.8	9/29/98	5.3	9/27/99	3.3		
		10/2/95	3.3	9/27/96	2.4	9/28/97	3.4	9/30/98	5.6	9/28/99	2.9		
		10/3/95	3.7	9/28/96	2.3	9/29/97	3.2	10/1/98	5.5	9/29/99	2.1		
		10/4/95	3.5	9/29/96	2.2	9/30/97	2.9	10/2/98	6.5	9/30/99	1.7		
		10/5/95	3.8	9/30/96	3.5	10/1/97	2.7	10/3/98	6.8	10/1/99	2.9		
		10/6/95	4.0	10/1/96	3.7	10/2/97	2.3	10/4/98	6.4	10/2/99	3.6		
		10/7/95	4.4	10/2/96	3.4	10/3/97	2.6	10/5/98	6.3	10/3/99	4.0		
		10/8/95	2.9	10/3/96	3.3	10/4/97	2.5	10/6/98	6.1	10/4/99	3.0		
		10/13/95	3.5	10/4/96	3.8	10/5/97	2.4	10/7/98	6.3	10/5/99	2.1		

C-3. DAILY AVERAGE OPACITY FOR BETHLEHEM, BURNS HARBOR BATTERY 2

Date	Opacity	Date	Opacity	Date	Opacity	Date	Opacity	Date	Opacity	Date	Opacity	Date	Opacity
		10/14/95	6.5	10/5/96	3.5	10/6/97	2.3	10/8/98	6.7	10/6/99	2.1		
		10/15/95	6.3	10/6/96	2.9	10/7/97	2.5	10/9/98	6.5	10/7/99	2.8		
		10/16/95	5.0	10/7/96	3.8	10/8/97	2.4	10/10/98	6.0	10/8/99	3.0		
		10/17/95	4.8	10/8/96	3.9	10/9/97	2.3	10/11/98	5.8	10/9/99	1.9		
		10/18/95	3.6	10/9/96	3.7	10/10/97	2.7	10/12/98	6.1	10/10/99	1.3		
		10/19/95	4.1	10/10/96	3.5	10/11/97	2.1	10/13/98	5.8	10/11/99	1.3		
		10/20/95	8.0	10/11/96	2.8	10/12/97	2.0	10/14/98	6.1	10/12/99	1.5		
		10/21/95	8.1	10/12/96	2.3	10/13/97	1.9	10/15/98	6.2	10/13/99	3.1		
		10/22/95	5.8	10/13/96	3.1	10/14/97	2.3	10/16/98	5.5	10/14/99	2.9		
		10/23/95	5.1	10/14/96	3.6	10/15/97	2.8	10/17/98	5.8	10/15/99	3.3		
		10/24/95	9.1	10/15/96	2.1	10/16/97	2.7	10/18/98	6.3	10/16/99	4.2		
		10/25/95	8.6	10/16/96	2.6	10/17/97	2.9	10/19/98	5.6	10/17/99	4.2		
		10/26/95	8.2	10/17/96	2.3	10/18/97	2.8	10/20/98	5.9	10/18/99	3.9		
		10/27/95	8.6	10/18/96	2.8	10/19/97	2.6	10/21/98	6.3	10/19/99	3.9		
		10/28/95	9.7	10/19/96	3.7	10/20/97	2.3	10/22/98	6.1	10/20/99	5.1		
		10/29/95	8.1	10/20/96	3.2	10/21/97	2.8	10/23/98	6.3	10/21/99	6.0		
		10/30/95	8.0	10/21/96	3.0	10/22/97	3.7	10/24/98	6.5	10/22/99	6.9		
		10/31/95	7.1	10/22/96	3.9	10/23/97	3.3	10/25/98	6.6	10/23/99	8.7		
		11/1/95	6.3	10/23/96	4.5	10/24/97	3.4	10/26/98	5.8	10/24/99	6.1		
		11/2/95	7.8	10/24/96	4.4	10/25/97	3.9	10/27/98	6.9	10/25/99	6.4		
		11/3/95	10.8	10/25/96	4.6	10/26/97	5.0	10/28/98	7.5	10/26/99	7.1		
		11/4/95	8.9	10/26/96	3.9	10/27/97	4.8	10/29/98	8.1	10/27/99	5.8		
		11/5/95	9.2	10/27/96	4.0	10/28/97	5.3	10/30/98	7.9	10/28/99	3.5		
		11/6/95	6.2	10/28/96	4.5	10/29/97	4.6	10/31/98	7.7	10/29/99	3.4		
		11/7/95	5.0	10/29/96	5.0	10/30/97	3.2	11/1/98	7.7	10/30/99	3.2		
		11/8/95	8.6	10/30/96	4.9	10/31/97	3.3	11/2/98	7.7	10/31/99	3.7		
		11/9/95	8.7	10/31/96	6.1	11/1/97	3.6	11/3/98	7.9	11/1/99	3.1		
		11/10/95	2.2	11/1/96	4.8	11/2/97	4.4	11/4/98	7.7	11/2/99	4.2		
		11/11/95	5.9	11/2/96	5.0	11/3/97	5.0	11/5/98	7.9	11/3/99	3.4		
		11/12/95	8.4	11/3/96	5.5	11/4/97	4.9	11/6/98	8.0	11/4/99	2.9		
		11/13/95	7.2	11/4/96	3.6	11/5/97	4.7	11/7/98	8.2	11/5/99	2.9		

C-3. DAILY AVERAGE OPACITY FOR BETHLEHEM, BURNS HARBOR BATTERY 2

Date	Opacity	Date	Opacity	Date	Opacity	Date	Opacity	Date	Opacity	Date	Opacity	Date	Opacity
		11/14/95	7.2	11/5/96	3.3	11/6/97	4.7	11/8/98	8.8	11/6/99	1.7		
		11/15/95	6.9	11/6/96	3.8	11/7/97	3.9	11/9/98	10.1	11/7/99	1.6		
		11/16/95	6.4	11/7/96	3.8	11/8/97	4.4	11/10/98	8.6	11/8/99	1.7		
		11/17/95	5.8	11/8/96	4.2	11/9/97	4.9	11/11/98	5.1	11/9/99	1.0		
		11/18/95	5.1	11/9/96	5.2	11/10/97	5.3	11/12/98	1.8	11/10/99	0.8		
		11/19/95	3.4	11/10/96	5.9	11/11/97	6.0	11/13/98	1.1	11/11/99	1.9		
		11/20/95	3.5	11/11/96	5.0	11/12/97	6.5	11/14/98	1.7	11/12/99	2.9		
		11/21/95	6.6	11/12/96	5.1	11/13/97	5.7	11/15/98	1.7	11/13/99	2.7		
		11/22/95	5.6	11/13/96	2.8	11/14/97	4.7	11/16/98	2.0	11/14/99	2.8		
		11/23/95	4.4	11/14/96	2.9	11/16/97	6.5	11/17/98	1.9	11/15/99	1.3		
		11/24/95	3.2	11/15/96	2.2	11/17/97	6.7	11/18/98	1.4	11/16/99	1.2		
		11/25/95	2.5	11/16/96	1.3	11/18/97	5.8	11/19/98	2.4	11/17/99	1.6		
		11/26/95	2.5	11/17/96	1.6	11/19/97	5.2	11/20/98	3.5	11/18/99	1.5		
		11/27/95	2.9	11/18/96	2.8	11/20/97	4.5	11/21/98	2.6	11/19/99	2.7		
		11/28/95	4.5	11/19/96	4.3	11/21/97	4.5	11/22/98	2.4	11/20/99	3.0		
		11/29/95	4.0	11/20/96	3.9	11/22/97	4.5	11/23/98	2.2	11/21/99	2.8		
		11/30/95	3.4	11/21/96	4.3	11/23/97	6.0	11/24/98	2.3	11/22/99	2.0		
		12/1/95	2.6	11/22/96	4.0	11/24/97	6.6	11/25/98	2.6	11/23/99	2.4		
		12/2/95	2.3	11/23/96	3.2	11/25/97	5.2	11/26/98	2.3	11/24/99	2.6		
		12/3/95	2.0	11/24/96	1.8	11/26/97	4.5	11/27/98	2.2	11/25/99	3.8		
		12/4/95	2.9	11/25/96	3.0	11/27/97	5.0	11/28/98	2.4	11/26/99	2.7		
		12/5/95	3.2	11/26/96	4.9	11/28/97	4.1	11/29/98	2.8	11/27/99	2.7		
		12/6/95	5.3	11/27/96	9.5	11/29/97	4.3	11/30/98	3.2	11/28/99	1.6		
		12/7/95	5.4	11/28/96	9.8	11/30/97	5.1	12/1/98	2.2	11/29/99	2.2		
		12/8/95	5.4	11/29/96	6.2	12/1/97	5.2	12/2/98	1.8	11/30/99	1.3		
		12/9/95	10.6	11/30/96	3.7	12/2/97	5.0	12/3/98	1.0	12/1/99	1.9		
		12/10/95	8.9	12/1/96	7.9	12/3/97	5.5	12/4/98	1.3	12/2/99	2.5		
		12/11/95	6.6	12/2/96	6.4	12/4/97	6.0	12/5/98	1.5	12/3/99	4.2		
		12/12/95	3.8	12/3/96	5.5	12/5/97	8.6	12/6/98	2.3	12/4/99	2.1		
		12/13/95	2.8	12/4/96	7.4	12/6/97	8.6	12/7/98	2.9	12/5/99	3.5		
		12/14/95	2.4	12/5/96	6.9	12/7/97	6.9	12/8/98	1.9	12/6/99	3.0		

C-3. DAILY AVERAGE OPACITY FOR BETHLEHEM, BURNS HARBOR BATTERY 2

Date	Opacity	Date	Opacity	Date	Opacity	Date	Opacity	Date	Opacity	Date	Opacity	Date	Opacity
		12/15/95	2.2	12/6/96	5.2	12/8/97	6.7	12/9/98	1.7	12/7/99	4.8		
		12/16/95	2.3	12/7/96	5.9	12/9/97	6.6	12/10/98	1.5	12/8/99	4.0		
		12/17/95	2.3	12/8/96	6.5	12/10/97	6.3	12/11/98	1.4	12/9/99	2.3		
		12/18/95	2.2	12/9/96	5.1	12/11/97	5.5	12/12/98	0.8	12/10/99	4.3		
		12/19/95	2.1	12/10/96	3.2	12/12/97	6.9	12/13/98	0.8	12/11/99	1.2		
		12/20/95	2.7	12/11/96	3.0	12/13/97	7.6	12/14/98	0.8	12/12/99	2.7		
		12/21/95	3.6	12/12/96	3.3	12/14/97	7.2	12/15/98	1.1	12/13/99	2.4		
		12/22/95	3.6	12/13/96	3.3	12/15/97	6.5	12/16/98	2.4	12/14/99	3.1		
		12/23/95	3.2	12/14/96	2.7	12/16/97	6.5	12/17/98	1.9	12/15/99	3.8		
		12/24/95	3.4	12/15/96	3.0	12/17/97	7.0	12/18/98	1.8	12/16/99	3.8		
		12/25/95	3.4	12/16/96	3.9	12/18/97	4.0	12/19/98	2.4	12/17/99	4.4		
		12/26/95	3.6	12/17/96	5.6	12/19/97	4.1	12/20/98	1.9	12/18/99	3.9		
		12/27/95	2.8	12/18/96	7.9	12/20/97	4.0	12/21/98	3.0	12/19/99	3.5		
		12/28/95	2.8	12/19/96	9.6	12/21/97	4.5	12/22/98	4.1	12/20/99	3.6		
		12/29/95	2.7	12/20/96	9.5	12/22/97	4.6	12/23/98	3.7	12/21/99	3.9		
		12/30/95	2.8	12/21/96	5.6	12/23/97	4.4	12/24/98	3.6	12/22/99	5.2		
		12/31/95	2.5	12/22/96	3.4	12/24/97	5.1	12/25/98	2.6	12/23/99	6.0		
				12/23/96	3.8	12/25/97	5.1	12/26/98	3.1	12/24/99	4.8		
				12/24/96	6.2	12/26/97	5.7	12/27/98	2.4	12/25/99	4.9		
				12/25/96	8.7	12/27/97	6.0	12/28/98	2.9	12/26/99	6.1		
				12/26/96	6.3	12/28/97	5.8	12/29/98	3.8	12/27/99	5.1		
				12/27/96	4.6	12/29/97	5.3	12/30/98	4.1	12/28/99	5.6		
				12/28/96	3.7	12/30/97	7.0	12/31/98	5.1	12/29/99	4.2		
				12/29/96	4.6	12/31/97	8.1			12/30/99	4.9		
				12/30/96	4.5					12/31/99	4.7		
				12/31/96	4.4								

TECHNICAL REPORT DATA

(Please read Instructions on reverse before completing)

1. REPORT NO. EPA-453/R-01-006	2.	3. RECIPIENT'S ACCESSION NO.
4. TITLE AND SUBTITLE National Emission Standards for Hazardous Air Pollutants (NESHAP) for Coke Ovens: Pushing, Quenching, and Battery Stacks - Background Information for Proposed Standards		5. REPORT DATE February 2001 6. PERFORMING ORGANIZATION CODE
7. AUTHOR(S) Marvin Branscome and Sandra Burns, RTI and Lula Melton, EPA		8. PERFORMING ORGANIZATION REPORT NO.
9. PERFORMING ORGANIZATION NAME AND ADDRESS U.S. Environmental Protection Agency Office of Air Quality Planning and Standards Research Triangle Park, NC 27711		10. PROGRAM ELEMENT NO. 11. CONTRACT/GRANT NO. 68-D6-0014
12. SPONSORING AGENCY NAME AND ADDRESS John Seitz, Director Office of Air Quality Planning and Standards Office of Air and Radiation U.S. Environmental Protection Agency Research Triangle Park, NC 27711		13. TYPE OF REPORT AND PERIOD COVERED Final 14. SPONSORING AGENCY CODE EPA/200/04
15. SUPPLEMENTARY NOTES		

16. ABSTRACT

This report provides the background information for the proposed NESHAP to control hazardous air pollutants (HAPs) from coke ovens: pushing, quenching, and battery stacks. The emission control techniques, estimates of emissions, control costs, and environmental impacts are presented.

17. KEY WORDS AND DOCUMENT ANALYSIS

a. DESCRIPTORS	b. IDENTIFIERS/OPEN ENDED TERMS	c. COSATI Field/Group
emission controls environmental impacts estimates of air emissions	Air Pollution Control Coke Ovens Pushing, Quenching, and Battery Stacks Hazardous Air Pollutants	

18. DISTRIBUTION STATEMENT Release Unlimited	19. SECURITY CLASS *(Report)* Unclassified	21. NO. OF PAGES 224
	20. SECURITY CLASS *(Page)* Unclassified	22. PRICE

EPA Form 2220-1 (Rev. 4-77) PREVIOUS EDITION IS OBSOLETE