Note: This is a reference cited in *AP 42, Compilation of Air Pollutant Emission Factors, Volume I Stationary Point and Area Sources.* AP42 is located on the EPA web site at www.epa.gov/ttn/chief/ap42/

The file name refers to the reference number, the AP42 chapter and section. The file name "ref02_c01s02.pdf" would mean the reference is from AP42 chapter 1 section 2. The reference may be from a previous version of the section and no longer cited. The primary source should always be checked.

FINAL REPORT
EMISSIONS TESTING OF COMBUSTION STACK AND PUSHING OPERATIONS AT COKE BATTERY NO. 2 AT BETHLEHEM STEEL CORPORATION'S BURNS HARBOR DIVISION IN CHESTERTON, INDIANA

Volume I
Report Body and Appendices A and B

EPA Contract No. 68-D-98-004
Work Assignment No. 2-01

Prepared for:

John C. Bosch Jr. (MD-19)
Work Assignment Manager
SCGA, EMC, EMAD, OAQPS
U.S. Environmental Protection Agency
Research Triangle Park, NC 27711

February 1999
p:\s511.000\finalrpt.wpd

Submitted by:

PACIFIC ENVIRONMENTAL SERVICES, INC.
5001 S. Miami Blvd., Suite 300
Post Office Box 12077
Research Triangle Park, NC 27709-2077
(919) 941-0333 FAX (919) 941-0234

DISCLAIMER

This document was prepared by Pacific Environmental Services, Inc. (PES) under EPA Contract No. 68D98004, Work Assignment No. 2-01. This document has been reviewed following PES' internal quality assurance procedures and has been approved for distribution. The contents of this document do not necessarily reflect the views and policies of the U.S. EPA. Mention of trade names does not constitute endorsement by the EPA or PES.

TABLE OF CONTENTS

Page

1.0 INTRODUCTION 1-1

2.0 SUMMARY OF RESULTS 2-1

2.1 EMISSIONS TEST LOG 2-1
2.2 FILTERABLE PARTICULATE MATTER, METHYLENE CHLORIDE EXTRACTABLE MATTER (MCEM), AND METALS 2-1
2.3 POLYCYCLIC AROMATIC HYDROCARBONS (PAHs) 2-22

3.0 PROCESS AND CONTROL EQUIPMENT OPERATION 3-1

3.1 INTRODUCTION 3-1
3.2 PROCESS DESCRIPTION 3-1
3.3 PROCESS AND CONTROL DEVICE MONITORING 3-4

4.0 SAMPLING LOCATIONS 4-1

4.1 COKE OVEN BATTERY NO. 2 4-1

5.0 SAMPLING AND ANALYTICAL PROCEDURES 5-1

5.1 LOCATION OF MEASUREMENT SITES AND SAMPLE/VELOCITY TRAVERSE POINTS 5-1
5.2 DETERMINATION OF STACK GAS VOLUMETRIC FLOW RATE 5-3
5.3 DETERMINATION OF STACK GAS EMISSION RATE CORRECTION FACTORS, DRY MOLECULAR WEIGHT, AND EXCESS AIR 5-3
5.4 DETERMINATION OF STACK GAS MOISTURE CONTENT 5-3
5.5 DETERMINATION OF PARTICULATE MATTER/METHYLENE CHLORIDE EXTRACTABLE MATTER/METALS 5-3
5.6 POLYCYCLIC AROMATIC HYDROCARBONS 5-4

TABLE OF CONTENTS (Concluded)

6.0 QUALITY ASSURANCE/QUALITY CONTROL PROCEDURES AND RESULTS 6-1

6.1 CALIBRATION OF APPARATUS 6-1
6.2 ON-SITE MEASUREMENTS 6-5
6.3 LABORATORY ANALYSES 6-9

APPENDIX A PROCESS DATA
APPENDIX B RAW FIELD DATA
APPENDIX C ANALYTICAL DATA
APPENDIX D CALCULATIONS
APPENDIX E QA/QC DATA
APPENDIX F PARTICIPANTS
APPENDIX G SAMPLING AND ANALYTICAL PROCEDURES

LIST OF TABLES

Page

Table 2.1 Emissions Test Log, Bethlehem Steel Corporation, Chesterton, Indiana 2-2
Table 2.2 Particulate Matter/MCEM/Metals Emissions Sampling and Flue Gas Parameters - Baghouse Inlet, Bethlehem Steel, Chesterton, Indiana 2-4
Table 2.3 Filterable Particulate Matter Concentrations and Emission Rates - Baghouse Inlet, Bethlehem Steel, Chesterton, Indiana 2-5
Table 2.4 Methylene Chloride Extractable Matter Concentrations and Emission Rates - Baghouse Inlet, Bethlehem Steel, Chesterton, Indiana 2-6
Table 2.5 Multiple Metals Concentrations and Emission Rates Baghouse Inlet, Bethlehem Steel, Chesterton, Indiana 2-7
Table 2.6 Particulate Matter/MCEM/Metals Emission Sampling and Flue Gas Parameters - Baghouse Outlet, Bethlehem Steel, Chesterton, Indiana 2-12
Table 2.7 Filterable Particulate Matter Concentrations and Emission Rates - Baghouse Outlet, Bethlehem Steel, Chesterton, Indiana 2-13
Table 2.8 Methylene Chloride Extractable Matter Concentrations and Emission Rates - Baghouse Outlet, Bethlehem Steel, Chesterton, Indiana 2-14
Table 2.9 Multiple Metals Concentrations and Emission Rates - Baghouse Outlet, Bethlehem Steel, Chesterton, Indiana 2-15
Table 2.10 Baghouse Dust Multiple Metals Concentrations, Bethlehem Steel, Chesterton, Indiana 2-18
Table 2.11 Filterable Particulate Matter and Methylene Chloride Extractable Matter Removal Efficiencies, Coke Oven Battery No. 2 Baghouse, Bethlehem Steel, Chesterton, Indiana 2-20
Table 2.12 Particulate Matter/MCEM/Metals Emissions Sampling and Flue Gas Parameters - Underfire Stack, Bethlehem Steel, Chesterton, Indiana 2-21
Table 2.13 Filterable Particulate Matter Concentrations and Emission Rates - Underfire Stack, Bethlehem Steel, Chesterton, Indiana 2-23
Table 2.14 Methylene Chloride Extractable Matter Concentrations and Emission Rates - Underfire Stack, Bethlehem Steel, Chesterton, Indiana 2-24
Table 2.15 Multiple Metals Concentrations and Emission Rates - Underfire Stack Bethlehem Steel, Chesterton, Indiana 2-25
Table 2.16 PAH Emissions Sampling and Flue Gas Parameters - Baghouse Inlet Bethlehem Steel, Chesterton, Indiana 2-29
Table 2.17 PAH Concentrations and Emission Rates, Baghouse Inlet, Bethlehem Steel, Chesterton, Indiana 2-30

LIST OF TABLES (Concluded)

		Page
Table 2.18	PAH Emissions Sampling and Flue Gas Parameters - Baghouse Outlet Bethlehem Steel, Chesterton, Indiana	2-34
Table 2.19	PAH Concentrations and Emission Rates, Baghouse Outlet, Bethlehem Steel, Chesterton, Indiana	2-35
Table 2.20	PAH Emissions Sampling and Flue Gas Parameters - Underfire Stack Bethlehem Steel, Chesterton, Indiana	2-38
Table 2.21	PAH Concentrations and Emission Rates Underfire Stack Bethlehem Steel, Chesterton, Indiana	2-40
Table 3.1	Summary of Pushing Process and Control Device Parameters	3-4
Table 3.2A	Combustion Stack Parameters Test Run No. 1, 8/14/98	3-6
Table 3.2B	Combustion Stack Parameters: Test Run No. 2, 8/14/98	3-7
Table 3.2C	Combustion Stack Parameters: Test Run No. 3, 8/15/98	3-8
Table 4.1	Summary of Sampling and Analytical Methods, Bethlehem Steel Corp., Chesterton, Indiana	4-2
Table 4.2	Summary of Sampling Locations, Test Parameters, Sampling Methods, and Number and Duration of Tests, Bethlehem Steel Corp., Chesterton, Indiana	4-3
Table 4.3	PAH In-Stack Detection Limits	4-4
Table 4.4	Estimated Metals In-Stack Detection Limits	4-9
Table 5.1	Summary of Sampling Locations, Test Parameters, Sampling Methods, and Number and Duration of Tests, Bethlehem Steel Corporation, Chesterton, Indiana	5-2
Table 6.1	Summary of Temperature Sensor Calibration Data	6-2
Table 6.2	Summary of Pitot Tube Dimensional Data	6-4
Table 6.3	Summary of Dry Gas Meter and Orifice Calibration Data	6-6
Table 6.4	Summaryof EPA Method 315 and CARB Method 429 Field Sampling QA/QC Data	6-8
Table 6.5	Summary of EPA Method 315 Analytical QC Data Lab Blank Analysis	6-10
Table 6.6	Summary of EPA Method 315 Analytical QC Data Field Blank Analysis	6-11
Table 6.7	Summaryof EPA Method 29 Analytical QC Data Lab Control Sample (LCS) Recovery and Duplicate Analysis	6-13
Table 6.8	Summary of CARB Method 429 Analytical QC Data Field Blank Results	6-14
Table 6.9	Summary of CARB Method 429 Analytical QC Data Lab Control Sample (LCS)	6-15
Table 6.10	Summary of CARB Method 429 Analytical QC Data Surrogate Standard Recoveries	6-17

LIST OF FIGURES

		Page
Figure 1.1	Key Personnel and Responsibility for Testing at Bethlehem Steel Corp., Chesterton, Indiana	1-2
Figure 3.1	Schematic Of Pushing Emission Control For Battery No. 2	3-2
Figure 4.1	Baghouse Inlet Sample Location, Bethlehem Steel Corp., Chesterton, Indiana	4-2
Figure 4.2	Baghouse Inlet Traverse Point Locations, Bethlehem Steel Corp., Chesterton, Indiana	4-3
Figure 4.3	Baghouse Outlet Sample Location, Bethlehem Steel Corp., Chesterton, Indiana	4-4
Figure 4.4	Baghouse Outlet Traverse Point Locations, Bethlehem Steel Corp., Chesterton, Indiana	4-5
Figure 4.5	Combustion (Underfire) Sampling Location, Bethlehem Steel Corp., Chesterton, Indiana	4-7
Figure 4.6	Method 1 Calculation Sheet, Combustion Stack, Bethlehem Steel Corp., Chesterton, Indiana	4-8
Figure 5.1	Sampling Train Schematic for EPA Method 315	5-5
Figure 5.2	Sampling Train Schematic for CARB Method 429	5-7
Figure 5.3	CARB Method 429 Sample Recovery Schematic	5-8
Figure 5.4	CARB Method 429 Analytical Schematic	5-9

1.0 INTRODUCTION

The United States Environmental Protection Agency (EPA) is investigating the coke making industry to characterize hazardous air pollutants (HAPs) emitted from coke oven pushing operations and combustion (underfire) stacks. This test report addresses pushing emissions from a coke oven and emissions from the combustion (underfire) stack that serves coke Battery No. 2 at Bethlehem Steel Corporation's Burns Harbor Division in Chesterton, Indiana.

The purpose of this test program was to quantify emissions from the inlet and outlet of the baghouse that controls pushing emissions and to quantify emissions from the combustion stack outlet. The data may be used by EPA in the future to support a residual risk assessment for coke oven facilities.

The testing was performed to quantify uncontrolled and controlled air emissions of filterable particulate matter (PM), methylene chloride extractable matter (MCEM) and 19 polycyclic aromatic hydrocarbons (PAHs) [acenaphthene, acenapthylene, anthracene, benzo(a)anthracene, benzo(a)pyrene, benzo(b)fluoranthene, benzo(e)pyrene, benzo(k)fluoranthene, benzo(ghi)perylene, chrysene, dibenzo(a,h)anthracene, fluoranthene, fluorene, indeno(1,2,3-cd)pyrene, 2-methylnapthalene, napthalene, perylene, phenanthrene, and pyrene]. In addition, following the PM and MCEM analyses, the samples were analyzed to screen for the presence of 17 trace metals. Baghouse dust samples were also collected and analyzed for the same 16 trace metals. Simultaneous testing was performed at the inlet and outlet of the baghouse controlling emissions from the coke oven pushing operation. Outlet sampling was also performed on the combustion stack. In addition to pollutant testing, oxygen (O_2) and carbon dioxide (CO_2) were measured at each location. During the sampling program, Research Triangle Institute (RTI), another EPA contractor, monitored and recorded process and emission control system operating parameters.

PES used two subcontractors for this effort: DEECO provided technical assistance in preparation of the Quality Assurance Project Plan (QAPP) and assisted in the field sampling, and Eastern Research Group (ERG) prepared filter media and analyzed the EPA Method 315 samples for PM and EOM. In addition, PES used three contract laboratories for analytical services: Quanterra Environmental Services (Quanterra) provided PAH analyses using California Air Resources Board (CARB) Method 429, First Analytical Laboratories (FAL) provided metals analyses of the PM/MCEM sample residues and baghouse dust samples, and Laboratory Corporation of America (LabCorp) provided PAH analyses using National Institute for Occupational Safety and Health (NIOSH) Method 5506. The test program organization and major lines of communication are presented in Figure 1.1.

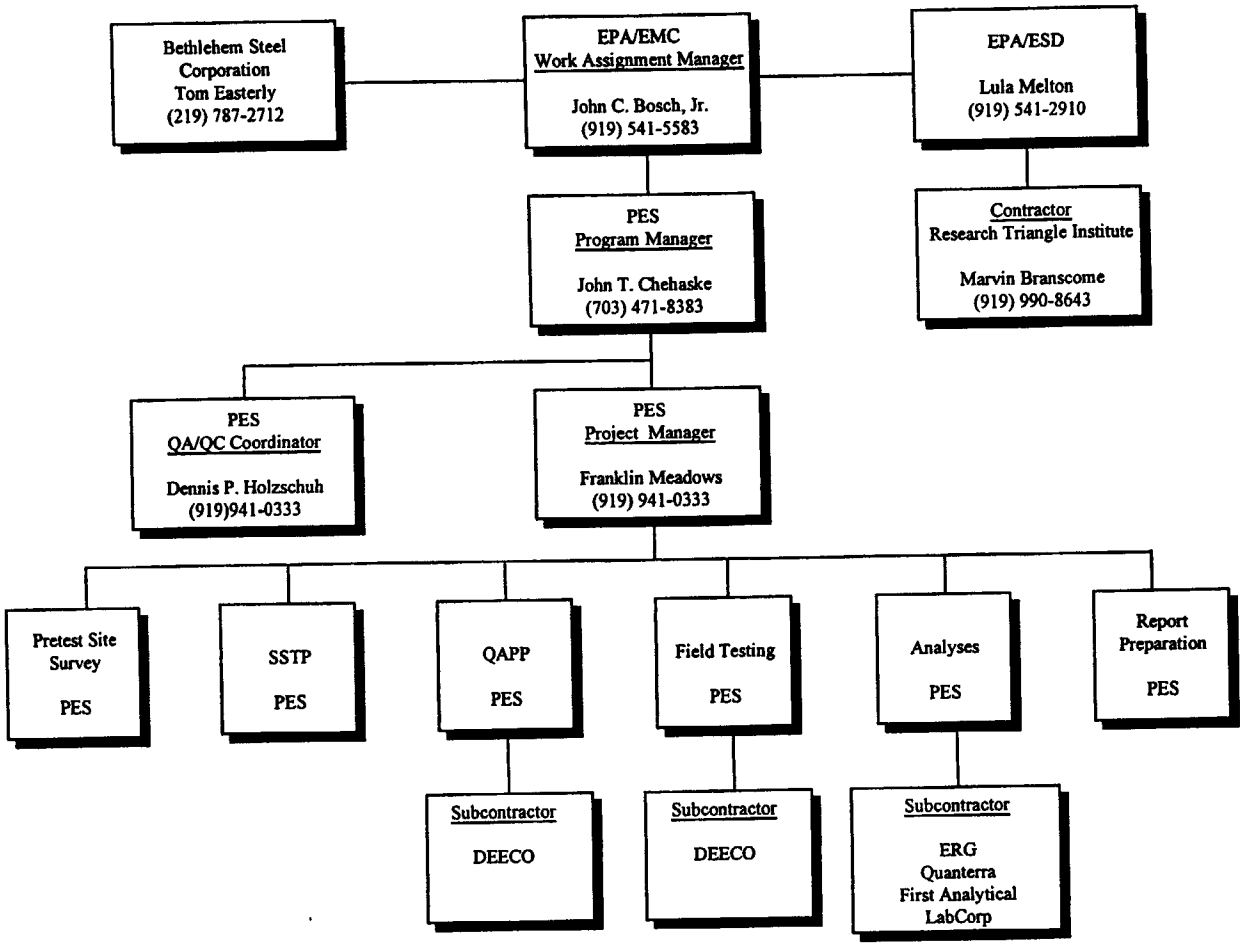

Figure 1.1 Key Personnel and Responsibility for Testing at Bethlehem Steel Corp., Chesterton, Indiana

2.0 SUMMARY OF RESULTS

This section provides test result summaries obtained from the Bethlehem Steel testing. Included in this summary are results of the tests conducted for filterable particulate matter (PM), methylene chloride extractable matter (MCEM), multiple metals and polycyclic aromatic hydrocarbons (PAHs) at the baghouse inlet and outlet, and the outlet stack of the combustion (underfire) stack. At each sampling location, stack gas temperatures and flow rates were determined using both the CARB 429 and EPA Method 315 sample procedures. At each location, each method produced slightly different results. These differences are attributed o placement of the sample probes during the course of each sample run. The sample probes were not placed together in the same sample port or at the same sample traverse point. The measured temperatures and flow rates varied between sample ports, as well.

Also, because a significant amount of the sampling at the baghouse inlet and outlet occured during non-pushing periods, the measured emissions from the pushing include any target pollutants that were present in the ambient air around the ovens and captured by the hood. On a mass emission basis, this represents a marginal, positive bias that is not believed to be significant.

2.1 EMISSIONS TEST LOG

Sampling at the coke oven pushing baghouse was conducted on August 11, 12, and 13, 1998. Sampling on the combustion stack was conducted on August 14 and 15, 1998. Table 2.1 summarizes the emissions test log. Presented are the run numbers, test dates, pollutants, run times and downtime for filter and sampling port changes.

2.2 FILTERABLE PARTICULATE MATTER, METHYLENE CHLORIDE EXTRACTABLE MATTER (MCEM), AND METALS

EPA Method 315 procedures were used to determine PM, MCEM, and 17 metals at the baghouse inlet and outlet and underfire stack. The target metals included: antimony (Sb), arsenic (As), barium (Ba), beryllium (Be), cadmium (Cd), chromium (Cr), cobalt (Co), copper (Cu), lead (Pb), manganese (Mn), mercury (Hg), nickel (Ni), phosphorous (P), selenium (Se), silver (Ag), thallium (Tl), and zinc (Zn). PM and MCEM were withdrawn isokinetically from the source. The PM mass includes any material removed in the probe acetone rinse and material on the filter. The MCEM was determined by adding a methylene chloride rinse of the probe and filter holder, extracting the condensible hydrocarbons collected in the impinger water, adding an acetone rinse

TABLE 2.1

EMISSIONS TEST LOG, BETHLEHEM STEEL CORPORATION, CHESTERTON, INDIANA

Run No.	Date	Pollutant	Run Time	Downtime, minutes
Coke Oven Battery No. 2 Baghouse Inlet				
B-I-M315-1	08/11/98	EOM/Metals	1035-2020	126
B-I-M429-1	08/11/98	PAHs	1030-2016	132
B-I-M5506-1	08/11/98	PAHs	1206-2007	149
B-I-M315-2	08/12/98	EOM/Metals	0922-1941	133
B-I-M429-2	08/12/98	PAHs	0924-1935	78
B-I-M5506-2	08/12/98	PAHs	0944-1928	154
B-I-M315-3	08/13/98	EOM/Metals	0842-1736	51
B-I-M429-3	08/13/98	PAHs	1332-1934	--[a]
B-I-M5506-3	08/13/98	PAHs	0842-1710	28
Coke Oven Battery No. 2 Baghouse Outlet				
B-O-M315-1	08/11/98	EOM/Metals	1037-1958	110
B-O-M429-1	08/11/98	PAHs	1037-1958	194
B-O-M5506-1	08/11/98	PAHs	1207-2000	143
B-O-M315-2	08/12/98	EOM/Metals	0929-1935	126
B-O-M429-2	08/12/98	PAHs	0928-1934	128
B-O-M5506-2	08/12/98	PAHs	0944-1901	107
B-O-M315-3	08/13/98	EOM/Metals	0840-1749	68
B-O-M429-3	08/13/98	PAHs	0840-1748	68
B-O-M5506-3	08/13/98	PAHs	0840-1715	40
Coke Oven Battery No. 2 Combustion Stack				
B-U-M315-1	08/14/98	EOM/Metals	0921-1325	64
B-U-M429-1	08/14/98	PAHs	0921-1325	64
B-U-M5506-1	08/14/98	PAHs	1103-1320	2
B-U-M315-2	08/14/98	EOM/Metals	1441-1809	28
B-U-M429-2	08/14/98	PAHs	1442-1809	27
B-U-M5506-2	08/14/98	PAHs	1441-1755	14
B-U-M315-3	08/15/98	EOM/Metals	0838-1203	25
B-U-M429-3	08/15/98	PAHs	0838-1208	30
B-U-M5506-3	08/15/98	PAHs	0841-1205	24

[a]Sampling was continuous in only one port, over a 6-hour time frame. The first 4-hour portion of this sample run was voided due to an unacceptable post-test leak check.

followed by a methylene chloride rinse of the sampling train components after the filter and before the silica gel impinger, and determining residue gravimetrically after separating the solvent. The metals analyses consisted of a nitric acid digestion of the filters and impinger residues described above. The metals analysis was by Direct Aspiration Flame Atomic Absorption Spectrophotometry (FLAAS), Graphite Furnace Atomic Absorption Spectrophotometry (GFAAS), and Inductively Coupled Plasma - Optical Emission (ICP). Mercury analysis was by Cold Vapor Atomic Adsorption Spectrophotometry (CVAAS). The baghouse inlet and outlet were sampled simultaneously to determine PM, MCEM, and metals. Sampling on the underfire stack was performed after the baghouse sampling effort.

The pushing operation necessitated adjusting sampling rates for maximum air flow during the actual pushing of coke. The pushing process occurred roughly once every 15 minutes, and lasted approximately two minutes. This required a maximum sample rate during the two minute push and a much lower sample rate during the idle time. This sample approach was used for all the isokinetic sample systems. The isokinetics were based on time weighted averages of pressure drops (delta p), stack temperatures, and meter temperatures. All concentrations and emission rate data in the tables are flow-weighted averages of both pushing and non-pushing periods.

2.2.1 Coke Oven Battery No. 2 Baghouse Inlet

Table 2.2 summarizes the EPA Method 315 baghouse inlet sample times and flue gas parameters. The total sampling time varied for each test run with an average of 484 minutes. The average sampling rate was 0.252 dry standard cubic feet per minute (dscfm). The average sample volume was 121.613 dry standard cubic feet (dscf) or 3.444 dry standard cubic meters (dscm). The average flue gas temperature was 160 degrees Fahrenheit (°F). The flue gas contained 0.5 percent (%) carbon dioxide (CO_2), 20.0% oxygen (O_2) and 2.2% moisture. The average flue gas volumetric flow rate was 77,242 actual cubic feet per minute (acfm) or 63,568 dscfm, or 1,800 dry standard cubic meters per minute (dscmm).

Table 2.3 summarizes the flue gas PM concentrations and emission rates at the baghouse inlet. The average concentration was 0.390 grains per dry standard cubic foot (gr/dscf) or 5.56E-05 pounds per dry standard cubic foot (lb/dscf) or 8.91E+05 micrograms per dry standard cubic meter (μg/dscm). The average emission rate was 212.3 pounds per hour (lb/hr) or 9.63E+10 micrograms per hour (μg/hr) or 1.9 pounds per ton of coke pushed (lb/ton pushed).

Table 2.4 summarizes the flue gas MCEM concentrations and emission rates at the baghouse inlet. The average MCEM concentration was 1.00E-03 gr/dscf or 1.43E-07 lb/dscf or 2,290 μg/dscm. The average MCEM emission rate was 0.546 lb/hr or 2.48E+08 μg/hr or 4.89E-03 lb/ton pushed.

Table 2.5 summarizes the flue gas metals concentrations and emission rates. The PM and MCEM residues were analyzed for 17 metals. Measured inlet metals concentrations were blank corrected based on the quartz filter blank results. Average concentrations ranged from 0.13 μg/dscm for silver to 59.7 μg/dscm for zinc.

TABLE 2.2

PARTICULATE MATTER/MCEM/METALS EMISSIONS SAMPLING AND FLUE GAS PARAMETERS - BAGHOUSE INLET BETHLEHEM STEEL, CHESTERTON, INDIANA

Run No.	B-I-315-1	B-I-315-2	B-I-315-3	Average
Date	08/11/98	08/12/98	08/13/98	--
Total Sampling Time, minutes	459	510	483	484
Coke Oven Pushes Per Test Run	46	47	42	45
Tons of Coke Pushed Per Hour	114.4	109.3	112.1	111.9
Avg. Sampling Rate, dscfm[a]	0.270	0.239	0.247	0.252
Sample Volume:				
dscf[b]	123.890	121.824	119.125	121.613
dscm[c]	3.508	3.450	3.373	3.444
Avg. Flue Gas Temp, °F	153	158	170	160
O_2 Conc., % by Volume	20.1	20.0	20.0	20.0
CO_2 Conc., % by Volume	0.5	0.5	0.5	0.5
Moisture, % by Volume	2.5	2.3	2.0	2.2
Flue Gas Volumetric Flow Rate:				
acfm[d]	77,509	77,263	76,952	77,242
dscfm[a]	64,257	63,845	62,601	63,568
dscmm[e]	1,820	1,808	1,773	1,800
Isokinetic Sampling Ratio, %	118.1	105.2	110.8	111.4

[a]Dry standard cubic feet per minute at 68°F (20°C) and 1 atm.
[b]Dry standard cubic feet at 68°F (20°C) and 1 atm.
[c]Dry standard cubic meters at 68°F (20°C) and 1 atm.
[d]Actual cubic feet per minute at flue gas conditions.
[e]Dry standard cubic meters per minute at 68°F (20°C) and 1 atm.

Note: All data presented are weighted averages based on both push and non-push periods.

TABLE 2.3

FILTERABLE PARTICULATE MATTER CONCENTRATIONS AND EMISSION RATES - BAGHOUSE INLET BETHLEHEM STEEL, CHESTERTON, INDIANA

Run No.	B-I-315-1	B-I-315-2	B-I-315-3	Average
Date	08/11/98	08/12/98	08/13/98	--
Clock Time, 24 hr Clock	1035-2020	0922-1941	0842-1736	--
Concentration:				
gr/dscf[a]	0.339	0.471	0.358	0.390
lb/dscf[b]	4.85E-05	6.73E-05	5.11E-05	5.56E-05
μg/dscm[c]	7.77E+05	10.78E+05	8.19E+05	8.91E+05
Emission Rate:				
lb/hr[d]	187.0	257.8	192.1	212.3
μg/hr[e]	8.48E+10	11.70E+10	8.71E+10	9.63E+10
lb/ton pushed[f]	1.63	2.36	1.71	1.90

[a]Grains per dry standard cubic foot at 68°F (20°C) and 1 atm.
[b]Pounds per dry standard cubic foot at 68°F (20°C) and 1 atm.
[c]Micrograms per dry standard cubic meter at 68°F (20°C) and 1 atm.
[d]Pounds per hour.
[e]Micrograms per hour.
[f]Pounds per ton of coke pushed.

Note: All data presented are weighted averages based on both push and non-push periods.

TABLE 2.4

METHYLENE CHLORIDE EXTRACTABLE MATTER CONCENTRATIONS AND EMISSION RATES - BAGHOUSE INLET BETHLEHEM STEEL, CHESTERTON, INDIANA

Run No.	B-I-315-1	B-I-315-2	B-I-315-3	Average
Date	08/11/98	08/12/98	08/13/98	--
Clock Time, 24 hr Clock	1035-2020	0922-1941	0842-1736	--
Concentration:				
gr/dscf[a]	1.02E-03	1.14E-03	0.84E-03	1.00E-03
lb/dscf[b]	1.63E-07	1.63E-07	1.20E-07	1.43E-07
μg/dscm[c]	2,340	2,610	1,930	2,290
Emission Rate:				
lb/hr[d]	0.563	0.624	0.452	0.546
μg/hr[e]	255E+08	2.83E+08	2.05E+08	2.48E+08
lb/ton pushed[f]	4.92E-03	5.71E-03	4.03E-03	4.89E-03

[a]Grains per dry standard cubic foot at 68°F (20°C) and 1 atm.
[b]Pounds per dry standard cubic foot at 68°F (20°C) and 1 atm.
[c]Micrograms per dry standard cubic meter at 68°F (20°C) and 1 atm.
[d]Pounds per hour.
[e]Micrograms per hour.
[f]Pounds per ton of coke pushed.

Note: All data presented are weighted averages based on both push and non-push periods.

TABLE 2.5

MULTIPLE METALS CONCENTRATIONS AND EMISSION RATES
BAGHOUSE INLET
BETHLEHEM STEEL, CHESTERTON, INDIANA

Run No.	B-I-315-1	B-I-315-2	B-I-315-3	Average
Date	08/11/98	08/12/98	08/13/98	--
Clock Time, 24 hr Clock	1035-2020	0922-1941	0842-1736	--
Antimony				
μg/dscm[a]	1.23	1.07	1.01	1.10
μg/hr[b]	1.34E+05	1.16E+05	1.07E+05	1.19E+05
lb/hr[c]	2.94E-04	2.56E-04	2.36E-04	2.62E-04
lb/ton pushed[d]	2.57E-06	2.34E-06	2.10E-06	2.34E-06
Arsenic				
μg/dscm[a]	17.9	23.7	27.4	23.0
μg/hr[b]	1.96E+06	2.57E+06	2.91E+06	2.48E+06
lb/hr[c]	4.31E-03	5.66E-03	6.40E-03	5.46E-03
lb/ton pushed[d]	3.77E-05	5.18E-05	5.71E-05	4.88E-05
Barium				
μg/dscm[a]	7.58	10.12	8.18	8.63
μg/hr[b]	8.28E+05	10.97E+05	8.70E+05	9.31E+05
lb/hr[c]	1.82E-03	2.41E-03	1.91E-03	2.05E-03
lb/ton pushed[d]	1.59E-05	2.21E-05	1.71E-05	1.84E-05
Beryllium				
μg/dscm[a]	0.27	0.31	0.30	0.30
μg/hr[b]	2.99E+04	3.36E+04	3.22E+04	3.19E+04
lb/hr[c]	6.57E-05	7.40E-05	7.08E-05	7.02E-05
lb/ton pushed[d]	5.75E-07	6.77E-07	6.31E-07	6.28E-07
Cadmium				
μg/dscm[a]	0.37	0.61	0.77	0.58
μg/hr[b]	4.05E+04	6.60E+04	8.20E+04	6.28E+04
lb/hr[c]	0.89E-04	1.45E-04	1.80E-04	1.38E-04
lb/ton pushed[d]	0.78E-06	1.33E-06	1.61E-06	1.24E-06
Chromium				
μg/dscm[a]	1.71	2.81	2.02	2.18
μg/hr[b]	1.87E+05	3.05E+05	2.14E+05	2.35E+05
lb/hr[c]	4.11E-04	6.71E-04	4.72E-04	5.18E-04
lb/ton pushed[d]	3.59E-06	6.14E-06	4.21E-06	4.65E-06
Cobalt				
μg/dscm[a]	0.86	1.45	0.89	1.07
μg/hr[b]	9.34E+05	15.72E+05	9.46E+05	11.51E+05
lb/hr[c]	2.05E-04	3.46E-04	2.08E-04	2.53E-04
lb/ton pushed[d]	1.80E-06	3.16E-06	1.86E-06	2.27E-06
Copper				
μg/dscm[a]	3.99	6.09	5.93	5.34
μg/hr[b]	4.36E+05	6.60E+05	6.31E+05	5.76E+05
lb/hr[c]	0.95E-03	1.45E-03	1.39E-03	1.27E-03
lb/ton pushed[d]	0.84E-05	1.33E-05	1.24E-05	1.13E-05

TABLE 2.5 (continued)

Run No.	B-I-315-1	B-I-315-2	B-I-315-3	Average
Lead				
μg/dscm[a]	29.2	44.1	37.7	37.0
μg/hr[b]	3.18E+06	4.79E+06	4.01E+06	4.00E+06
lb/hr[c]	7.00E-03	10.50E-03	8.83E-03	8.79E-03
lb/ton pushed[d]	6.12E-05	9.64E-05	7.87E-05	7.88E-05
Manganese				
μg/dscm[a]	11.1	12.5	12.2	11.9
μg/hr[b]	1.21E+06	1.35E+06	1.29E+06	1.29E+06
lb/hr[c]	2.67E-03	2.97E-03	2.84E-03	2.83E-03
lb/ton pushed[d]	2.33E-05	2.72E-05	2.54E-05	2.53E-05
Mercury				
μg/dscm[a]	0.14	0.17	0.15	0.15
μg/hr[b]	1.56E+04	1.89E+04	1.58E+04	1.67E+04
lb/hr[c]	3.42E-05	4.15E-05	3.47E-05	3.68E-05
lb/ton pushed[d]	2.99E-07	3.80E-07	3.09E-07	3.29E-07
Nickel				
μg/dscm[a]	24.8	25.1	18.2	22.7
μg/hr[b]	2.71E+06	2.72E+06	1.94E+06	2.45E+06
lb/hr[c]	5.96E-03	5.98E-03	4.26E-03	5.40E-03
lb/ton pushed[d]	5.21E-05	5.47E-05	3.80E-05	4.83E-05
Phosphorus				
μg/dscm[a]	11.4	13.0	12.7	12.4
μg/hr[b]	1.24E+06	1.42E+06	1.36E+06	1.34E+06
lb/hr[c]	2.74E-03	3.11E-03	2.98E-03	2.94E-03
lb/ton pushed[d]	2.39E-05	2.85E-05	2.66E-05	2.63E-05
Selenium				
μg/dscm[a]	4.10	6.12	5.66	5.29
μg/hr[b]	4.48E+05	6.63E+05	6.02E+05	5.71E+05
lb/hr[c]	0.99E-03	1.46E-03	1.32E-03	1.26E-03
lb/ton pushed[d]	0.86E-05	1.34E-05	1.18E-05	1.13E-05
Silver				
μg/dscm[a]	0.09	0.17	0.12	0.13
μg/hr[b]	0.93E+04	1.89E+04	1.26E+04	1.36E+04
lb/hr[c]	2.05E-05	4.15E-05	2.77E-05	2.99E-05
lb/ton pushed[d]	1.80E-07	3.80E-07	2.47E-07	2.69E-07
Thallium				
μg/dscm[a]	1.05	1.42	1.36	1.28
μg/hr[b]	1.15E+05	1.54E+05	1.45E+05	1.38E+05
lb/hr[c]	2.53E-04	3.39E-04	3.19E-04	3.04E-04
lb/ton pushed[d]	2.22E-06	3.10E-06	2.85E-06	2.72E-06

TABLE 2.5 (concluded)

Run No.	B-I-315-1	B-I-315-2	B-I-315-3	Average
Zinc				
μg/dscm[a]	47.6	67.0	64.4	59.7
μg/hr[b]	5.20E+06	7.27E+06	6.85E+06	6.44E+06
lb/hr[c]	1.14E-02	1.60E-02	1.51E-02	1.42E-02
lb/ton pushed[d]	1.00E-04	1.46E-04	1.34E-04	1.27E-04

[a]Micrograms per dry standard cubic meter.
[b]Micrograms per hour.
[c]Pounds per hour.
[d]Pounds per ton of coke pushed.

Note: All data presented are weighted averages based on both push and non-push periods.

The pushing operation necessitated adjusting sampling rates for maximum air flow during the actual pushing of coke. The pushing process occurred roughly once every 15 minutes, and lasted approximately two minutes. This required a maximum sample rate during the two minute push and a much lower sample rate during the idle time. This sample approach was used for all the isokinetic sample systems. The isokinetics were based on time weighted averages of pressure drops (delta p), stack temperatures, and meter temperatures. All concentrations and emission rate data in the tables are flow-weighted averages of both pushing and non-pushing periods.

The following notes were recorded during the field sampling effort and analyses of samples. Events were discussed with the WAM and ESD personnel when modifications to the test plan were required.

- The baghouse inlet site could not be sampled using all four sampling ports. Two ports were used, necessitating the use of a 10' effective Teflon® lined probe and flexible Teflon® connections to the impinger system.

- Inlet filters had to be changed during each port change due to heavy particulate loading.

- On August 11, sample runs were shortened from the original 10 hour proposed sample length to eight hours. The runs were initially shortened due to darkness. At this point in the program it was agreed upon to shorten test runs to eight hours. Even with shortened sample times we were able to sample during a minimum of 40 pushes, which was one of the project goals.

- Sample times were adjusted to insure all traverse points were sampled.

- Run No. B-I-M315-1 did not pass the post-test leak check. Based on the previous acceptable leak checks (port change), heavy particulate loading and sample vacuums, the sample was accepted as representative. It was determined the break occurred when removing the probe from the duct at the end of the test run.

- Discussed calculation of isokinetics. Calculations would be based on time weighted averages of velocity pressures (delta p), stack temperatures, and meter temperatures.

- Run No. B-I-M429 sample had a small amount of particulate get past the filter. Robert Weidenfeld of Quanterra was contacted to discuss possible sample effects. The total sample fraction is extracted for PAHs, the particulate should have no effect on the XAD®-2 resin analyses or results.

- The EPA WAM, John Bosch, requested a discussion on the benefit of a thorough review of laboratory sample handling and analyses procedures. PES was instructed to implement review procedures for the analytical laboratories.

- Run No. B-I-M429-3 did not pass leak check at port change (~ four hours into run). Sample was voided and a new M429 run was restarted. Sample ran for six hours (four hours simultaneous with outlet sample).

- On August 18, Quanterra reported that one filter on the B-I-429-3 run had a small amount of water from the ice used to keep samples cool.

- On August 18, Quanterra reported that on Run No. B-I-M429-1 the water knockout container had lost a small amount of contents.

2.2.2 Coke Oven Battery No. 2 Baghouse Outlet

Table 2.6 summarizes the EPA Method 315 baghouse outlet sample times and flue gas parameters. The total test time varied for the three test runs, with an average time of 443 minutes. The average sampling rate was 0.366 dscfm. The average sampling volume was 163.069 dscf or 4.618 dscm. The average flue gas temperature was 135°F, with average stack gas compositions of 20.2% O_2 and 0.5% CO_2. Moisture content of the flue gas averaged 2.3%. Flue gas volumetric flow rates averaged 95,427 acfm or 82,242 dscfm or 2,329 dscmm. The isokinetic sampling rate averaged 98.2 percent.

The baghouse outlet sampling location indicated a higher volumetric flowrate in comparison to the baghouse inlet sampling location. This was due to a dilution air damper located on the mass cooler remaining open at 10% of full opening during periods of non-pushing (roughly 13 minutes of a total of 15 minutes). The dilution air damper was fully open during pushing operations, or 2 minutes out of 15 minutes. This resulted in measurable air flow for the entire length of the test during non-pushing operations at the baghouse outlet that were greater than flows measured at the baghouse inlet sampling location, which was located prior to the mass cooler.

Table 2.7 summarizes the PM concentrations and emission rates for the baghouse outlet. The average PM concentration was 4.66E-04 gr/dscf or 6.66E-08 lb/dscf or 1,070 μg/dscm. The average emission rate was 0.329 lb/hr or 1.49E+08 μg/hr or 2.85E-03 lb/ton pushed.

Table 2.8 summarizes the MCEM concentrations and emission rates for the baghouse outlet. Concentrations averaged 4.49E-04 gr/dscf or 6.41E-08 lb/dscf or 1,030 μg/dscm. Emission rates averaged 0.317 lb/hr or 1.44E+08 μg/hr or 2.74E-03 lb/ton pushed.

Table 2.9 summarizes the multiple metals concentrations and emission rates for the combined PM and MCEM fractions collected with the EPA Method 315 sampling trains. The majority of the 17 target metals were found to be non-detectable.

Table 2.10 summarizes the multiple metals concentrations from the baghouse dust samples collected during each baghouse sample run. Baghouse samples were collected from the dust hoppers at the beginning, middle, and end of each run.

TABLE 2.6

PARTICULATE MATTER/MCEM/METALS EMISSIONS SAMPLING AND FLUE GAS PARAMETERS - BAGHOUSE OUTLET BETHLEHEM STEEL, CHESTERTON, INDIANA

Run No.	B-O-315-1	B-O-315-2	B-O-315-3	Average
Date	08/11/98	08/12/98	08/13/98	--
Total Sampling Time, minutes	368	480	481	443
Coke Oven Pushes Per Test Run	46	47	42	45
Tons of Coke Pushed Per Hour	119.3	111.7	114.4	115.1
Avg. Sampling Rate, dscfm[a]	0.343	0.378	0.377	0.366
Sample Volume: dscf[b] dscm[c]	 126.388 3.577	 181.292 5.134	 181.577 5.142	 163.069 4.618
Avg. Flue Gas Temp, °F	134	135	135	135
O_2 Conc., % by Volume	20.5	20.0	20.0	20.2
CO_2 Conc., % by Volume	0.5	0.5	0.5	0.5
Moisture, % by Volume	2.5	2.2	2.1	2.3
Flue Gas Volumetric Flow Rate: acfm[d] dscfm[a] dscmm[e]	 96,755 83,087 2,353	 94,024 81,147 2,298	 95,502 82,493 2,336	 95,427 82,242 2,329
Isokinetic Sampling Ratio, %	99.6	98.3	96.7	98.2

[a]Dry standard cubic feet per minute at 68°F (20°C) and 1 atm.
[b]Dry standard cubic feet at 68°F (20°C) and 1 atm.
[c]Dry standard cubic meters at 68°F (20°C) and 1 atm.
[d]Actual cubic feet per minute at flue gas conditions.
[e]Dry standard cubic meters per minute at 68°F (20°C) and 1 atm.

Note: All data presented are weighted averages based on both push and non-push periods.

TABLE 2.7

FILTERABLE PARTICULATE MATTER CONCENTRATIONS AND EMISSION RATES - BAGHOUSE OUTLET BETHLEHEM STEEL, CHESTERTON, INDIANA

Run No.	B-O-315-1	B-O-315-2	B-O-315-3	Average
Date	08/11/98	08/12/98	08/13/98	--
Clock Time, 24 hr Clock	1037-1958	0929-1935	0840-1749	--
Concentration:				
gr/dscf[a]	5.74E-04	3.75E-04	4.50E-04	4.66E-04
lb/dscf[b]	8.20E-08	5.35E-08	6.43E-08	6.66E-08
μg/dscm[c]	1,310	857	1,030	1,070
Emission Rate:				
lb/hr[d]	0.409	0.261	0.319	0.329
μg/hr[e]	1.85E+08	1.18E+08	1.44E+08	1.49E+08
lb/ton pushed[f]	3.43E-03	2.33E-03	2.78E-03	2.85E-03

[a]Grains per dry standard cubic foot at 68°F (20°C) and 1 atm.
[b]Pounds per dry standard cubic foot at 68°F (20°C) and 1 atm.
[c]Micrograms per dry standard cubic meter at 68°F (20°C) and 1 atm.
[d]Pounds per hour.
[e]Micrograms per hour.
[d]Pounds per ton of coke pushed.

Note: All data presented are weighted averages based on both push and non-push periods.

TABLE 2.8

METHYLENE CHLORIDE EXTRACTABLE MATTER CONCENTRATIONS AND EMISSION RATES - BAGHOUSE OUTLET BETHLEHEM STEEL, CHESTERTON, INDIANA

Run No.	B-O-315-1	B-O-315-2	B-O-315-3	Average
Date	08/11/98	08/12/98	08/13/98	--
Clock Time, 24 hr Clock	1037-1958	0929-1935	0840-1729	--
Concentration:				
gr/dscf[a]	5.13E-04	3.92E-04	4.42E-04	4.49E-04
lb/dscf[b]	7.33E-08	5.59E-08	6.31E-08	6.41E-08
μg/dscm[c]	1,170	896	1,010	1,030
Emission Rate:				
lb/hr[d]	0.365	0.272	0.312	0.317
μg/hr[e]	1.66E+08	1.24E+08	1.42E+08	1.44E+08
lb/ton pushed[f]	3.06E-03	2.44E-03	2.73E-03	2.74E-03

[a]Grains per dry standard cubic foot at 68°F (20°C) and 1 atm.
[b]Pounds per dry standard cubic foot at 68°F (20°C) and 1 atm.
[c]Micrograms per dry standard cubic meter at 68°F (20°C) and 1 atm.
[d]Pounds per hour.
[e]Micrograms per hour.
[d]Pounds per ton of coke pushed.

Note: All data presented are weighted averages based on both push and non-push periods.

TABLE 2.9

MULTIPLE METALS CONCENTRATIONS AND EMISSION RATES - BAGHOUSE OUTLET BETHLEHEM STEEL, CHESTERTON, INDIANA

Run No.	B-O-315-1	B-O-315-2	B-O-315-3	Average
Date	08/11/98	08/12/98	08/13/98	--
Clock Time, 24 hr Clock	1037-1958	0929-1935	0840-1749	--
Antimony				
μg/dscm[a]	ND	ND	ND	ND
μg/hr[b]	ND	ND	ND	ND
lb/hr[c]	ND	ND	ND	ND
lb/ton pushed[d]	ND	ND	ND	ND
Arsenic				
μg/dscm[a]	ND	ND	ND	ND
μg/hr[b]	ND	ND	ND	ND
lb/hr[c]	ND	ND	ND	ND
lb/ton pushed[d]	ND	ND	ND	ND
Barium				
μg/dscm[a]	1.12E-01	1.36E-01	ND	0.83E-01
μg/hr[b]	1.58E+04	1.88E+04	ND	1.15E+04
lb/hr[c]	3.47E-05	4.14E-05	ND	2.54E-05
lb/ton pushed[d]	2.91E-07	3.70E-07	ND	2.21E-07
Beryllium				
μg/dscm[a]	ND	ND	ND	ND
μg/hr[b]	ND	ND	ND	ND
lb/hr[c]	ND	ND	ND	ND
lb/ton pushed[d]	ND	ND	ND	ND
Cadmium				
μg/dscm[a]	2.80E-02	ND	ND	0.93E-02
μg/hr[b]	3,946	ND	ND	1,315
lb/hr[c]	8.68E-06	ND	ND	2.89E-06
lb/ton pushed[d]	7.28E-08	ND	ND	2.43E-08
Chromium				
μg/dscm[a]	ND	ND	ND	ND
μg/hr[b]	ND	ND	ND	ND
lb/hr[c]	ND	ND	ND	ND
lb/ton pushed[d]	ND	ND	ND	ND
Cobalt				
μg/dscm[a]	ND	ND	ND	ND
μg/hr[b]	ND	ND	ND	ND
lb/hr[c]	ND	ND	ND	ND
lb/ton pushed[d]	ND	ND	ND	ND
Copper				
μg/dscm[a]	ND	3.90E-01	ND	1.30E-01
μg/hr[b]	ND	5.37E-04	ND	1.79E+04
lb/hr[c]	ND	1.18E-04	ND	0.39E-04
lb/ton pushed[d]	ND	1.06E-06	ND	3.53E-07

TABLE 2.9 (continued)

Run No.	B-O-315-1	B-O-315-2	B-O-315-3	Average
Lead				
μg/dscm[a]	ND	ND	ND	ND
μg/hr[b]	ND	ND	ND	ND
lb/hr[c]	ND	ND	ND	ND
lb/ton pushed[d]	ND	ND	ND	ND
Manganese				
μg/dscm[a]	ND	7.79E-01	ND	2.60E-01
μg/hr[b]	ND	1.07E+05	ND	0.36E+05
lb/hr[c]	ND	2.36E-04	ND	0.79E-04
lb/ton pushed[d]	ND	2.12E-06	ND	0.71E-06
Mercury				
μg/dscm[a]	ND	ND	ND	ND
μg/hr[b]	ND	ND	ND	ND
lb/hr[d]	ND	ND	ND	ND
lb/ton pushed[d]	ND	ND	ND	ND
Nickel				
μg/dscm[a]	ND	1.75E-01	ND	0.58E-01
μg/hr[b]	ND	2.42E+04	ND	0.81E+04
lb/hr[c]	ND	5.32E-05	ND	1.77E-05
lb/ton pushed[d]	ND	4.76E-07	ND	1.59E-07
Phosphorus				
μg/dscm[a]	ND	ND	ND	ND
μg/hr[b]	ND	ND	ND	ND
lb/hr[c]	ND	ND	ND	ND
lb/ton pushed[d]	ND	ND	ND	ND
Selenium				
μg/dscm[a]	ND	9.74E-02	ND	3.25E-02
μg/hr[b]	ND	1.34E+04	ND	0.45E+04
lb/hr[c]	ND	2.95E-05	ND	0.99E-05
lb/ton pushed[d]	ND	2.65E-07	ND	0.88E-07
Silver				
μg/dscm[a]	ND	4.09E-01	ND	1.36E-01
μg/hr[b]	ND	5.64E+04	ND	1.88E+04
lb/hr[c]	ND	1.24E-04	ND	0.41E-04
lb/ton pushed[d]	ND	1.11E-06	ND	0.37E-06
Thallium				
μg/dscm[a]	ND	ND	ND	ND
μg/hr[b]	ND	ND	ND	ND
lb/hr[c]	ND	ND	ND	ND
lb/ton pushed[d]	ND	ND	ND	ND

TABLE 2.9 (concluded)

Run No.	B-O-315-1	B-O-315-2	B-O-315-3	Average
Zinc				
μg/dscm[a]	ND	1.56E-01	ND	0.52E-01
μg/hr[b]	ND	2.15E+04	ND	0.72E+04
lb/hr[c]	ND	4.73E-05	ND	1.58E-05
lb/ton pushed[d]	ND	4.23E-07	ND	1.41E-07

[a]Micrograms per dry standard cubic meter.
[b]Micrograms per hour.
[c]Pounds per hour.
[d]Pounds per ton of coke pushed.

Note: All data presented are weighted averages based on both push and non-push periods.

TABLE 2.10

BAGHOUSE DUST MULTIPLE METALS CONCENTRATIONS BETHLEHEM STEEL, CHESTERTON, INDIANA

Run No.	BD-BS-1	BD-BS-2	BD-BS-3	Average
Date	08/11/98	08/12/98	08/13/98	--
Antimony, μg/g[a]	0.33	0.52	0.36	0.40
Arsenic, μg/g	10.70	10.50	11.00	10.73
Barium, μg/g	9.21	9.32	8.62	9.05
Beryllium, μg/g	0.42	0.33	0.29	0.35
Cadmium, μg/g	1.64	1.50	1.80	1.65
Chromium, μg/g	7.42	8.33	6.39	7.38
Copper, μg/g	7.70	8.10	6.50	7.43
Lead, μg/g	35.80	36.40	38.90	37.03
Manganese, μg/g	67.50	70.20	66.20	67.97
Mercury, μg/g	0.20	0.15	0.18	0.18
Nickel, μg/g	7.00	7.80	6.70	7.17
Phosphorus, μg/g	44.70	50.40	43.50	46.20
Selenium, μg/g	3.80	3.50	3.20	3.50
Silver, μg/g	0.05	ND	0.06	0.04
Thallium, μg/g	0.77	0.88	0.72	0.79
Zinc, μg/g	37.50	36.10	39.70	37.77

[a]μg/g - Microgram per gram of dust sample.
ND - non detected, counted as "zero".

Table 2.11 summarizes the PM and MCEM removal efficiencies for the Coke Oven Battery No. 2 baghouse. PM removal efficiencies averaged 99.85%. MCEM removal efficiencies averaged 41.94%.

The pushing operation necessitated adjusting sampling rates for maximum air flow during the actual pushing of coke. The pushing process occurred roughly once every 15 minutes, and lasted approximately two minutes. This required a maximum sample rate during the two minute push and a much lower sample rate during the idle time. This sample approach was used for all the isokinetic sample systems. The isokinetics were based on time weighted averages of pressure drops (delta p), stack temperatures, and meter temperatures. All concentrations and emission rate data in the tables are flow-weighted averages of both pushing and non-pushing periods.

The filterable PM does not necessarily have to be more than the MCEM. The filterable PM is based on PM collected in the probe and on the MCEM. The MCEM includes both the filterable PM and condensible sample fractions.

The following notes were recorded during the field sampling effort and analysis of samples. Events were discussed with the WAM and ESD personnel when modifications to the test plan were required.

- The shortened sample times as described previously, apply to the outlet location also.
- Calculation of isokinetics, as discussed previously, also applies to the outlet location.
- On August 12 plant personnel were requested to modify eyebolts on the outlet stack. The eyebolts were used to support a monorail sample conveyor system, and were placed three feet above the ports. This was necessary to insure a safe support system for sampling. This caused a slight delay in our start time.

2.2.3 Underfire Stack

The combustion or underfire stack was sampled for PM and MCEM concentrations and emission rates, as well as multiple metals analysis on the EOM filters and residue. A total of three, 180 minute sample runs were conducted at this test location.

Table 2.12 summarizes the EPA Method 315 underfire stack sample times and flue gas parameters measured. Three sample runs were conducted over the course of two days. The average sampling time was 182 minutes, sample Run No. U-315-3 being 185 minutes in length, compared to 180 minutes for the other two runs. The average sampling rate was 0.537 dscfm. The average sample volume was 97.823 dscf or 2.770 dscm. Flue gas temperatures averaged 444°F, with an average stack gas composition of 5.0% CO_2 and 10.4% O_2. Flue gas moisture content averaged 17.0%. The flue gas volumetric flow rate averaged 157,321 acfm or 75,684 dscfm or 2,143 dscmm. Isokinetic sampling rates for the sample runs averaged 105%.

TABLE 2.11

FILTERABLE PARTICULATE MATTER AND METHYLENE CHLORIDE EXTRACTABLE MATTER REMOVAL EFFICIENCIES COKE OVEN BATTERY NO. 2 BAGHOUSE BETHLEHEM STEEL, CHESTERTON, INDIANA

Test Set No.	M-315-1	M-315-2	M-315-3	Average
Date	08/11/98	08/12/98	08/13/98	--
Filterable Particulate Matter				
Emission Rate, lb/hr:[a] Inlet Outlet	 187.0 0.409	 257.8 0.261	 192.1 0.319	 212.3 0.329
Removal Efficiency, %[b]	99.78	99.90	99.83	99.85
Extractable Organic Matter				
Emission Rate, lb/hr:[a] Inlet Outlet	 0.563 0.365	 0.624 0.272	 0.452 0.312	 0.546 0.317
Removal Efficiency, %[b]	35.17	56.41	30.97	41.94

[a]Pounds per hour.

[b]Removal Efficiency, % = $\frac{\text{Inlet, lb/hr - Outlet, lb/hr}}{\text{Inlet, lb/hr}} \times 100$

Note: All data presented are weighted averages based on both push and non-push periods.

TABLE 2.12

PARTICULATE MATTER/MCEM/METALS EMISSIONS SAMPLING AND FLUE GAS PARAMETERS - UNDERFIRE STACK BETHLEHEM STEEL, CHESTERTON, INDIANA

Run No.	B-U-315-1	B-U-315-2	B-U-315-3	Average
Date	08/14/98	08/14/98	08/15/98	--
Total Sampling Time, minutes	180	180	185	182
Tons of Coal Charged Per Hour	159.0	141.5	160.8	153.8
Avg. Sampling Rate, dscfm[a]	0.512	0.417	0.682	0.537
Sample Volume:				
dscf[b]	92.198	75.109	126.161	97.823
dscm[c]	2.611	2.127	3.572	2.770
Avg. Flue Gas Temp, °F	444	451	438	444
O_2 Conc., % by Volume	11.3	9.6	10.5	10.4
CO_2 Conc., % by Volume	4.4	5.5	5.0	5.0
Moisture, % by Volume	17.1	17.3	16.6	17.0
Flue Gas Volumetric Flow Rate:				
acfm[d]	160,715	134,733	176,514	157,321
dscfm[a]	77,362	64,153	85,538	75,684
dscmm[e]	2,191	1,817	2,442	2,143
Isokinetic Sampling Ratio, %	106	108	101	105

[a]Dry standard cubic feet per minute at 68°F (20°C) and 1 atm.
[b]Dry standard cubic feet at 68°F (20°C) and 1 atm.
[c]Dry standard cubic meters at 68°F (20°C) and 1 atm.
[d]Actual cubic feet per minute at flue gas conditions.
[e]Dry standard cubic meters per minute at 68°F (20°C) and 1 atm.

Analysis of the data indicates that the flow rate determined for Run No. B-U-315-2 was about 20% lower than the average flow rate (81,450 dscfm) for Run Nos. B-U-315-1 and B-U-315-3. Also, the flow rate was about 30% lower than the flow rate determined concurrently during Run No. B-U-429-2 using CARB Method 429. Although no reason can be found to explain this discrepancy, it appears that the flow rate during Run No. B-U-315-2 was too low, thereby biasing the PM, MCEM, and metals emission rates by 20-30% for that test run.

Table 2.13 summarizes the PM concentrations and emission rates for the underfire stack. Concentrations averaged 3.95E-02 gr/dscf or 5.65E-06 lb/dscf or 9.05E+04 μg/dscm. Emission rates averaged 25.5 lb/hr or 1.16E+09 μg/hr or 1.66E-01 pounds per ton of coal charged (lb/ton charged).

Table 2.14 summarizes the MCEM concentrations and emission rates for the three sample runs. Concentrations averaged 10.1E-03 gr/dscf or 14.4E-07 lb/dscf or 2.31E+04 μg/dscm. Emission rates averaged 6.85 lb/hr or 3.11E+10 μg/hr or 4.37E-02 lb/ton charged. Sample Run No. 3 results were roughly three times higher than the first two runs. Sample Run No. 3 was performed on Saturday, August 15, 1998.

Table 2.15 summarizes the multiple metal concentrations and emission rates from the PM and MCEM residues of the EPA Method 315 samples. Measured underfire metals concentrations were blank corrected based on the blank quartz filter results. The majority of the target analytes were below detectable quantities for most of the test runs. Arsenic, barium, lead, and selenium were found in detectable quantities in all the samples.

The following notes were recorded during the field sampling effort and analysis of samples. Events were discussed with the WAM and ESD personnel when modifications to the test plan were required.

- On August 13 the underfire site was prepared for sampling. Port covers were removed and ports cleaned prior to sampling. Bethlehem Steel provided personnel to cut steel rails to allow PES sample hardware to be used.

- During a port change on Run No. B-U-429-1, the probe was broken. The glass liner was changed and the run was continued. This did not affect the sample results.

2.3 POLYCYCLIC AROMATIC HYDROCARBONS (PAHs)

The polycyclic aromatic hydrocarbons (PAHs) were collected using CARB Method 429, "Determination of Polycyclic Aromatic Hydrocarbons from Stationary Sources." This method was used to determine 19 individual PAHs. Particulate and gaseous phase PAHs were extracted isokinetically from each source and collected in the probe, Teflon® filter, XAD®-2 resin and impinger portions of the sampling train. The baghouse inlet and outlet were sampled simultaneously for the measurement of PAHs. The underfire stack PAHs were sampled

TABLE 2.13

FILTERABLE PARTICULATE MATTER CONCENTRATIONS AND EMISSION RATES - UNDERFIRE STACK BETHLEHEM STEEL, CHESTERTON, INDIANA

Run No.	B-U-315-1	B-U-315-2	B-U-315-3	Average
Date	08/14/98	08/14/98	08/15/98	--
Clock Time, 24 hr Clock	0921-1325	1441-1809	0838-1203	--
Concentration:				
gr/dscf[a]	3.41E-02	4.47E-02	3.99E-02	3.95E-02
lb/dscf[b]	4.87E-06	6.39E-06	5.69E-06	5.65E-06
μg/dscm[c]	7.80E+04	10.23E+04	9.12E+04	9.05E+04
Emission Rate:				
lb/hr[d]	22.6	24.6	29.2	25.5
μg/hr[e]	1.03E+10	1.12E+10	1.33E+10	1.16E+10
lb/ton charged[f]	1.42E-01	1.74E-01	1.82E-01	1.66E-01

[a]Grains per dry standard cubic foot at 68°F (20°C) and 1 atm.
[b]Pounds per dry standard cubic foot at 68°F (20°C) and 1 atm.
[c]Micrograms per dry standard cubic meter at 68°F (20°C) and 1 atm.
[d]Pounds per hour.
[e]Micrograms per hour.
[f]Pounds per ton of coal charged.

TABLE 2.14

METHYLENE CHLORIDE EXTRACTABLE MATTER CONCENTRATIONS AND EMISSION RATES - UNDERFIRE STACK BETHLEHEM STEEL, CHESTERTON, INDIANA

Run No.	B-U-315-1	B-U-315-2	B-U-315-3	Average
Date	08/14/98	08/14/98	08/15/98	--
Clock Time, 24 hr Clock	0921-1325	1441-1809	0838-1203	--
Concentration:				
gr/dscf[a]	6.83E-03	6.64E-03	16.9E-03	10.1E-03
lb/dscf[b]	9.76E-07	9.48E-07	24.1E-07	14.4E-07
μg/dscm[c]	1.56E+04	1.52E+04	3.86E+04	2.31E+04
Emission Rate:				
lb/hr[d]	4.53	3.65	12.37	6.85
μg/hr[e]	2.05E+09	1.66E+09	5.61E+09	3.11E+09
lb/ton charged[f]	2.85E-02	2.58E-02	7.69E-02	4.37E-02

[a]Grains per dry standard cubic foot at 68°F (20°C) and 1 atm.
[b]Pounds per dry standard cubic foot at 68°F (20°C) and 1 atm.
[c]Micrograms per dry standard cubic meter at 68°F (20°C) and 1 atm.
[d]Pounds per hour.
[e]Micrograms per hour.
[f]Pounds per ton of coal charged.

TABLE 2.15

MULTIPLE METALS CONCENTRATIONS AND EMISSION RATES - UNDERFIRE STACK BETHLEHEM STEEL, CHESTERTON, INDIANA

Run No.	B-U-315-1	B-U-315-2	B-U-315-3	Average
Date	08/14/98	08/14/98	08/15/98	--
Clock Time, 24 hr Clock	0921-1325	1441-1809	0838-1203	--
Antimony				
μg/dscm[a]	ND	ND	ND	ND
μg/hr[b]	ND	ND	ND	ND
lb/hr[c]	ND	ND	ND	ND
lb/ton charged[d]	ND	ND	ND	ND
Arsenic				
μg/dscm[a]	2.19E-03	2.20E-03	2.39E-03	2.26E-03
μg/hr[b]	6.31E+05	4.36E+05	8.43E+05	6.37E+05
lb/hr[c]	6.34E-07	5.28E-07	7.66E-07	6.42E-07
lb/ton charged[d]	3.99E-09	3.73E-09	4.76E-09	4.16E-09
Barium				
μg/dscm[a]	1.83E-04	9.91E-04	2.06E-04	4.60E-04
μg/hr[b]	5.26E+04	19.6E+04	7.27E+04	10.71E+04
lb/hr[c]	5.28E-08	23.8E-08	6.60E-08	11.9E-08
lb/ton charged[d]	3.32E-10	16.8E-10	4.10E-10	8.07E-10
Beryllium				
μg/dscm[a]	ND	ND	ND	ND
μg/hr[b]	ND	ND	ND	ND
lb/hr[c]	ND	ND	ND	ND
lb/ton charged[d]	ND	ND	ND	ND
Cadmium				
μg/dscm[a]	9.13E-05	ND	ND	3.04E-05
μg/hr[b]	2.63E+04	ND	ND	0.88E+04
lb/hr[c]	2.63E-08	ND	ND	0.88E-08
lb/ton charged[d]	1.66E-10	ND	ND	0.55E-10
Chromium				
μg/dscm[a]	ND	ND	ND	ND
μg/hr[b]	ND	ND	ND	ND
lb/hr[c]	ND	ND	ND	ND
lb/ton charged[d]	ND	ND	ND	ND
Cobalt				
μg/dscm[a]	ND	ND	ND	ND
μg/hr[b]	ND	ND	ND	ND
lb/hr[c]	ND	ND	ND	ND
lb/ton charged[d]	ND	ND	ND	ND
Copper				
μg/dscm[a]	ND	1.65E-03	0.83E-03	0.83E-03
μg/hr[b]	ND	3.27E+05	2.91E+05	2.06E+05
lb/hr[c]	ND	3.96E-07	2.64E-07	2.20E-07
lb/ton charged[d]	ND	2.80E-09	1.64E-09	1.48E-09

TABLE 2.15 (continued)

Run No.	B-U-315-1	B-U-315-2	B-U-315-3	Average
Lead				
μg/dscm[a]	1.55E-03	1.60E-03	0.83E-03	1.32E-03
μg/hr[b]	4.47E+05	3.16E+05	2.91E+05	3.51E+05
lb/hr[c]	4.49E-07	3.83E-07	2.64E-07	3.65E-07
lb/ton charged[d]	2.82E-09	2.71E-09	1.64E-09	2.39E-09
Manganese				
μg/dscm[a]	ND	ND	ND	ND
μg/hr[b]	ND	ND	ND	ND
lb/hr[c]	ND	ND	ND	ND
lb/ton charged[d]	ND	ND	ND	ND
Mercury				
μg/dscm[a]	ND	ND	ND	ND
μg/hr[b]	ND	ND	ND	ND
lb/hr[c]	ND	ND	ND	ND
lb/ton charged[d]	ND	ND	ND	ND
Nickel				
μg/dscm[a]	ND	ND	ND	ND
μg/hr[b]	ND	ND	ND	ND
lb/hr[c]	ND	ND	ND	ND
lb/ton charged[d]	ND	ND	ND	ND
Phosphorus				
μg/dscm[a]	ND	ND	ND	ND
μg/hr[b]	ND	ND	ND	ND
lb/hr[c]	ND	ND	ND	ND
lb/ton charged[d]	ND	ND	ND	ND
Selenium				
μg/dscm[a]	1.05E-03	1.10E-03	0.41E-03	0.86E-03
μg/hr[b]	3.02E+05	2.18E+05	1.45E+05	2.22E+05
lb/hr[c]	3.04E-07	2.64E-07	1.32E-07	2.33E-07
lb/ton charged[d]	1.91E-09	1.87E-09	0.82E-09	1.53E-09
Silver				
μg/dscm[a]	ND	ND	ND	ND
μg/hr[b]	ND	ND	ND	ND
lb/hr[c]	ND	ND	ND	ND
lb/ton charged[d]	ND	ND	ND	ND
Thallium				
μg/dscm[a]	4.11E-04	ND	4.13E-04	2.75E-04
μg/hr[b]	1.18E+05	ND	1.45E+05	0.88E+05
lb/hr[c]	1.19E-07	ND	1.32E-07	0.84E-07
lb/ton charged[d]	7.47E-10	ND	8.21E-10	5.23E-10

TABLE 2.15 (concluded)

Run No.	B-U-315-1	B-U-315-2	B-U-315-3	Average
Zinc				
μg/dscm[a]	8.22E-04	4.95E-04	ND	4.39E-04
μg/hr[b]	2.37E+05	0.98E+05	ND	1.12E+05
lb/hr[c]	2.38E-07	1.19E-07	ND	1.19E-07
lb/ton charged[d]	14.9E-10	8.40E-10	ND	7.78E-10

[a]Micrograms per dry standard cubic meter.
[b]Micrograms per hour.
[c]Pounds per hour.
[d]Pounds per ton of coal charged.

concurrently with the EPA Method 315 sampling train, and was performed after the baghouse sampling effort. The concentrations at all three sample locations were corrected for the method blank.

A NIOSH Method 5506 sample system was used to scan for gaseous phase PAHs at the baghouse inlet/outlet and underfire stack. The NIOSH approach was used as a backup approach to the CARB Method 429 sampling system. The PAHs had never been sampled at these sample locations and there was no previous records of PAH detectable limits or quantities. The NIOSH analytical results are presented in Appendix C. The majority of the NIOSH Method 5506 PAH results were at the method detection limits.

2.3.1 Coke Oven Battery No. 2 Baghouse Inlet

Table 2.16 summarizes the CARB Method 429 sample times and flue gas parameters at the baghouse inlet. One sample run was conducted per day. The average length of the sample runs was 432 minutes. The average sampling rate was 0.186 dscfm. The average sample volume was 80.189 dscf or 2.271 dscm.

The average flue gas temperature was 145°F, with a stack gas composition of 0.5% CO_2 and 20.0% O_2. Moisture content averaged 3.6%. Flue gas volumetric flow rates averaged 67,672 acfm or 56,361 dscfm or 1,596 dscmm. The isokinetic sampling rate averaged 92.2%.

The stack gas moisture content determined using the CARB 429 sample train was slightly greater than the moisture content determined using the EPA Method 315 sample train (3.6% versus 2.2%). The small but consistent difference in moisture is attributed to the Method 429 XAD®resin module. The resin was protected from sunlight with an aluminum foil wrap. During sampling, the wrap would get wet by being submerged in a ice water bath. The trap was weighed with the aluminum foil wrap before and after each sample run. The wrap probably retained a small amount of moisture to contribute to a small position moisture bias. It was not possible to completely dry out the aluminum foil. Also an unheated flexible Teflon® sample line, 20 feet long, was used between the filter and impinger portion of the sample train which may have caused minor differences in moisture content.

Table 2.17 summarizes the PAH concentrations and emission rates for the baghouse inlet. All compounds were found in detectable levels for the three test runs with the exception of perylene (not detected in Run Nos. 2 and 3) and dibenz(a,h) anthrancene (not detected in Run No. 2). Naphthalene was found in the highest concentrations, at an average of 13.3 μg/dscm. Phenanthrene and fluoranthene were the other two compounds occurring in high concentrations (relative to the other compounds).

The pushing operation necessitated adjusting sampling rates for maximum air flow during the actual pushing of coke. The pushing process occurred roughly once every 15 minutes, and lasted approximately two minutes. This required a maximum sample rate during the two minute push and a much lower sample rate during the idle time. This sample approach was used for all the isokinetic sample systems. The isokinetics were based on time weighted averages of pressure

TABLE 2.16

PAH EMISSIONS SAMPLING AND FLUE GAS PARAMETERS - BAGHOUSE INLET BETHLEHEM STEEL, CHESTERTON, INDIANA

Run No.	B-I-429-1	B-I-429-2	B-I-429-3	Average
Date	08/11/98	08/12/98	08/13/98	--
Total Sampling Time, minutes	453	482	362	432
Coke Oven Pushes Per Test Run	46	47	27*	40
Tons of Coke Pushed Per Hour	114.1	110.8	109.5	111.5
Avg. Sampling Rate, dscfm[a]	0.192	0.178	0.187	0.186
Sample Volume:				
dscf[b]	87.151	85.686	67.729	80.189
dscm[c]	2.468	2.426	1.918	2.271
Avg. Flue Gas Temp, °F	142	147	145	145
O_2 Conc., % by Volume	20.1	20.0	20.0	20.0
CO_2 Conc., % by Volume	0.5	0.5	0.5	0.5
Moisture, % by Volume	3.3	3.4	3.9	3.6
Flue Gas Volumetric Flow Rate:				
acfm[d]	70,118	63,871	69,027	67,672
dscfm[a]	58,683	53,111	57,287	56,361
dscmm[e]	1,662	1,504	1,622	1,596
Isokinetic Sampling Ratio, %	90.5	94.1	91.8	92.2

[a]Dry standard cubic feet per minute at 68°F (20°C) and 1 atm.
[b]Dry standard cubic feet at 68°F (20°C) and 1 atm.
[c]Dry standard cubic meters at 68°F (20°C) and 1 atm.
[d]Actual cubic feet per minute at flue gas conditions.
[e]Dry standard cubic meters per minute at 68°F (20°C) and 1 atm.
*Run No. B-I-429-3 consisted of a shorter sample run due to a sample train malfunction when sampling the first port. Sampling consisted of a straight six-hour test run utilizing other port.

Note: All data presented are weighted averages based on both push and non-push periods.

TABLE 2.17

PAH CONCENTRATIONS AND EMISSION RATES
BAGHOUSE INLET
BETHLEHEM STEEL, CHESTERTON, INDIANA

Run No.	B-I-429-1	B-I-429-2	B-I-429-3	Average
Date	08/11/98	08/12/98	08/13/98	--
Clock Time, 24 hr Clock	1030-2016	0924-1935	1332-1934	--
Naphthalene				
μg/dscm[a]	10.7	14.2	1.48	13.3
μg/hr[b]	1.07E+06	1.28E+06	1.45E+06	1.27E+06
lb/hr[c]	2.36E-03	2.83E-03	3.19E-03	2.79E-03
lb/ton pushed[d]	2.07E-05	2.55E-05	2.91E-05	2.51E-05
2-Methylnaphthalene				
μg/dscm[a]	3.20	2.80	1.60	2.52
μg/hr[b]	3.18E+05	2.52E+05	1.52E+05	2.41E+05
lb/hr[c]	7.02E-04	5.56E-04	3.34E-04	5.31E-04
lb/ton pushed[d]	6.15E-06	5.02E-06	3.05E-06	4.74E-06
Acenaphthylene				
μg/dscm[a]	2.23	2.43	1.36	2.01
μg/hr[b]	2.22E+05	2.19E+05	1.32E+05	1.91E+05
lb/h[c]	4.90E-04	4.84E-04	2.91E-04	4.22E-04
lb/ton pushed[d]	4.29E-06	4.37E-06	2.66E-06	3.77E-06
Acenaphthene				
μg/dscm[a]	0.28	0.19	0.28	0.25
μg/hr[b]	2.79E+04	1.75E+04	2.69E+04	2.41E+04
lb/hr[c]	6.15E-05	3.85E-05	5.93E-05	5.31E-05
lb/ton pushed[d]	5.39E-07	3.48E-07	5.42E-07	4.76E-07
Fluorene				
μg/dscm[a]	0.89	0.74	0.68	0.77
μg/hr[b]	8.89E+04	6.69E+04	6.59E+04	7.39E+04
lb/hr[c]	1.96E-04	1.48E-04	1.45E-04	1.63E-04
lb/ton pushed[d]	1.72E-06	1.33E-06	1.33E-06	1.46E-06
Phenanthrene				
μg/dscm[a]	8.09	10.29	10.42	9.60
μg/hr[b]	8.07E+05	9.29E+05	10.14E+05	9.17E+05
lb/hr[c]	1.78E-03	2.05E-03	2.24E-03	2.02E-03
lb/ton pushed[d]	1.56E-05	1.85E-05	2.04E-05	1.82E-05
Anthrancene				
μg/dscm[a]	0.30	0.28	0.33	0.31
μg/hr[b]	2.95E+04	2.57E+04	3.25E+04	2.92E+04
lb/hr[c]	6.50E-05	5.66E-05	7.16E-05	6.44E-05
lb/ton pushed[d]	5.70E-07	5.11E-07	6.54E-07	5.78E-07
Fluoranthene				
μg/dscm[a]	5.67	7.42	3.44	5.51
μg/hr[b]	5.66E+05	6.69E+05	3.35E+05	5.23E+05
lb/hr[c]	1.25E-03	1.48E-03	0.74E-03	1.15E-03
lb/ton pushed[d]	1.09E-05	1.33E-05	67.5E-05	1.03E-05

TABLE 2.17 (continued)

Run No.	B-I-429-1	B-I-429-2	B-I-429-3	Average
Pyrene				
μg/dscm[a]	0.89	1.03	0.20	0.71
μg/hr[b]	8.89E+04	9.30E+04	1.93E+04	6.70E+04
lb/hr[c]	1.96E-04	2.05E-04	0.43E-04	1.48E-04
lb/ton pushed[d]	1.72E-06	1.85E-06	0.39E-06	1.32E-06
Benzo(a) Anthrancene				
μg/dscm[a]	0.37	0.32	0.07	0.25
μg/hr[b]	3.68E+04	2.86E+04	0.66E+04	2.40E+04
lb/hr[c]	8.11E-05	6.31E-05	1.45E-05	5.29E-05
lb/ton pushed[d]	7.10E-07	5.70E-07	1.33E-07	4.71E-07
Chrysene				
μg/dscm[a]	2.23	2.47	0.99	1.90
μg/hr[b]	2.22E+05	2.23E+05	0.96E+05	1.81E+05
lb/hr[c]	4.90E-04	4.92E-04	2.13E-04	3.98E-04
lb/ton pushed[d]	4.29E-06	4.44E-06	1.94E-06	3.56E-06
Benzo(b) Fluoranthene				
μg/dscm[a]	3.04	3.38	1.51	2.64
μg/hr[b]	3.03E+05	3.05E+05	1.47E+05	2.52E+05
lb/hr[c]	6.68E-04	6.72E-04	3.24E-04	5.55E-04
lb/ton pushed[d]	5.85E-06	6.07E-06	2.96E-06	4.96E-06
Benzo(k) Fluoranthene				
μg/dscm[a]	1.22	1.28	0.43	0.98
μg/hr[b]	1.21E+05	1.15E+05	0.42E+05	0.93E+05
lb/hr[c]	2.67E-04	2.54E-04	0.93E-04	2.05E-04
lb/ton pushed[d]	2.34E-06	2.29E-06	0.85E-06	1.83E-06
Benzo(e) Pyrene				
μg/dscm[a]	0.81	0.78	0.20	0.60
μg/hr[b]	8.08E+04	7.07E+04	1.98E+04	5.71E+04
lb/hr[c]	1.78E-04	1.56E-04	0.44E-04	1.26E-04
lb/ton pushed[d]	1.56E-06	1.41E-06	0.40E-06	1.12E-06
Benzo(a) Pyrene				
μg/dscm[a]	0.25	0.18	0.07	0.17
μg/hr[b]	2.50E+04	1.60E+04	0.66E+04	1.59E+04
lb/hr[c]	5.52E-05	3.53E-05	1.45E-05	3.50E-05
lb/ton pushed[d]	4.84E-07	3.18E-07	1.33E-07	3.12E-07
Perylene				
μg/dscm[a]	0.041	ND	ND	0.014
μg/hr[b]	4,040	ND	ND	1,347
lb/hr[c]	8.91E-06	ND	ND	2.97E-06
lb/ton pushed[d]	7.80E-08	ND	ND	2.60E-08
Indeno(1,2,3-cd) Pyrene				
μg/dscm[a]	1.09	1.11	0.24	0.81
μg/hr[b]	1.09E+05	1.00E+05	0.23E+05	0.77E+05
lb/hr[c]	2.40E-04	2.21E-04	0.50E-04	1.71E-04
lb/ton pushed[d]	2.11E-06	2.00E-06	0.46E-06	1.52E-06

TABLE 2.17 (concluded)

Run No.	B-I-429-1	B-I-429-2	B-I-429-3	Average
Dibenz(a,h) Anthracene				
μg/dscm[a]	0.45	0.45	0.13	0.34
μg/hr[b]	4.44E+04	4.09E+04	1.22E+04	3.25E+04
lb/hr[c]	9.80E-05	9.02E-05	2.69E-05	7.17E-05
lb/ton pushed[d]	8.58E-07	8.14E-07	2.45E-07	6.39E-07
Benzo(g,h,i) Perylene				
μg/dscm[a]	0.89	0.91	0.17	0.66
μg/hr[b]	8.89E+04	8.18E+04	1.62E+04	6.23E+04
lb/hr[c]	1.96E-04	1.80E-04	0.36E-04	1.37E-04
lb/ton pushed[d]	1.72E-06	1.63E-06	0.33E-06	1.22E-06

[a]Micrograms per dry standard cubic meter.
[b]Micrograms per hour.
[c]Pounds per hour.
[d]Pounds per ton of coke pushed.

Note: All data presented are weighted averages based on both push and non-push periods.

drops (delta p), stack temperatures, and meter temperatures. All concentrations and emission rate data in the tables are flow-weighted averages of both pushing and non-pushing periods.

2.3.2 Coke Oven Battery No. 2 Baghouse Outlet

The baghouse outlet was sampled simultaneously with the baghouse inlet. Table 2.18 summarizes the Method Method 429 sample times and flue gas parameters measured at the baghouse outlet. The average sampling length of the three tests was 442 minutes. The average sampling rate was 0.406 dscfm. Sampling volumes averaged 179.321 dscf or 5.078 dscm.

Flue gas temperatures averaged 135°F, with an average stack gas composition of 0.5% CO_2 and 20.2% O_2. Moisture content averaged 2.6%. Flue gas volumetric flow rates averaged 101,785 acfm or 87,325 dscfm or 2,473 dscmm. The isokinetic sampling rate averaged 102.7%.

The baghouse outlet sampling location indicated a higher volume flowrate in comparison to the baghouse inlet sampling location. This was due to a dilution air damper located on the mass cooler remaining open at 10% of full opening during periods of non-pushing (roughly 13 minutes of a total of 15 minutes). The dilution air damper was fully open during pushing operatons, or 2 minutes out of 15 minutes. This resulted in measureable air flow for the entire length of the test during non-pushing operatons at the baghouse outlet that were greater than flows measured at the baghouse inlet sampling location, which was located prior to the mass cooler.

Table 2.19 summarizes the PAH concentrations and emission rates for the baghouse outlet. Naphthalene and 2-methyl naphthalene were the compounds found in the highest concentration of the 19 compounds analyzed for, at 1.67 μg/dscm and 0.38 μg/dscm, respectively. All of the other compounds were detected in lower concentrations than naphthalene and 2-methyl naphthalene.

The pushing operation necessitated adjusting sampling rates for maximum air flow during the actual pushing of coke. The pushing process occurred roughly once every 15 minutes, and lasted approximately two minutes. This required a maximum sample rate during the two minute push and a much lower sample rate during the idle time. This sample approach was used for all the isokinetic sample systems. The isokinetics were based on time weighted averages of pressure drops (delta p), stack temperatures, and meter temperatures. All concentrations and emission rate data in the tables are flow-weighted averages of both pushing and non-pushing periods.

2.3.3 Underfire Stack

The underfire or combustion stack was sampled over the course of the two days. Sample runs were 180 minutes in length. Table 2.20 summarizes the CARB Method 429 sample times and flue gas parameters measured at the underfire stack. The average sampling rate was 0.554 dscfm, with an average sampling volume of 99.664 dscf or 2.822 dscm. Flue gas temperatures averaged 447°F. Flue gas composition averaged 5.0% CO_2 and 10.4% O_2, with an average

TABLE 2.18

PAH EMISSIONS SAMPLING AND FLUE GAS PARAMETERS - BAGHOUSE OUTLET BETHLEHEM STEEL, CHESTERTON, INDIANA

Run No.	B-O-429-1	B-O-429-2	B-O-429-3	Average
Date	08/11/98	08/12/98	08/13/98	--
Total Sampling Time, minutes	367	478	480	442
Coke Oven Pushes Per Test Run	46	47	42	45
Tons of Coke Pushed Per Hour	119.3	111.7	114.7	115.2
Avg. Sampling Rate, dscfm[a]	0.399	0.411	0.407	0.406
Sample Volume: dscf[b] dscm[c]	 146.291 4.142	 196.291 5.558	 195.382 5.533	 179.321 5.078
Avg. Flue Gas Temp, °F	132	137	136	135
O_2 Conc., % by Volume	20.5	20.0	20.0	20.2
CO_2 Conc., % by Volume	0.5	0.5	0.5	0.5
Moisture, % by Volume	2.9	2.8	2.3	2.6
Flue Gas Volumetric Flow Rate: acfm[d] dscfm[a] dscmm[e]	 99,693 85,504 2,421	 105,790 90,478 2,562	 99,873 85,994 2,435	 101,785 87,325 2,473
Isokinetic Sampling Ratio, %	112.4	95.9	100.0	102.7

[a]Dry standard cubic feet per minute at 68°F (20°C) and 1 atm.
[b]Dry standard cubic feet at 68°F (20°C) and 1 atm.
[c]Dry standard cubic meters at 68°F (20°C) and 1 atm.
[d]Actual cubic feet per minute at flue gas conditions.
[e]Dry standard cubic meters per minute at 68°F (20°C) and 1 atm.

Note: All data presented are weighted averages based on both push and non-push periods.

TABLE 2.19

PAH CONCENTRATIONS AND EMISSION RATES
BAGHOUSE OUTLET
BETHLEHEM STEEL, CHESTERTON, INDIANA

Run No.	B-O-429-1	B-O-429-2	B-O-429-3	Average
Date	08/11/98	08/12/98	08/13/98	--
Clock Time, 24 hr Clock	1037-1958	0928-1934	0840-1748	--
Naphthalene				
μg/dscm[a]	1.76	1.58	1.66	1.67
μg/hr[b]	2.55E+05	2.43E+05	2.42E+05	2.46E+05
lb/hr[c]	5.63E-04	5.35E-04	5.34E-04	5.44E-04
lb/ton pushed[d]	4.72E-06	4.79E-06	4.66E-06	4.72E-06
2-Methyl naphthalene				
μg/dscm[a]	0.38	0.45	0.31	0.38
μg/hr[b]	5.565E+04	6.88E+04	4.45E+04	5.63E+04
lb/hr[c]	1.23E-04	1.52E-04	0.98E-04	1.24E-04
lb/ton pushed[d]	1.03E-06	1.36E-06	0.86E-06	1.08E-06
Acenaphthylene				
μg/dscm[a]	0.07	0.05	0.06	0.06
μg/hr[b]	1.05E+04	0.77E+04	0.90E+04	0.91E+04
lb/hr[c]	2.32E-05	1.71E-05	1.98E-05	2.00E-05
lb/ton pushed[d]	1.94E-07	1.53E-07	1.73E-07	1.73E-07
Acenaphthene				
μg/dscm[a]	0.03	0.02	0.02	0.02
μg/hr[b]	4,910	3,319	2,562	3,597
lb/hr[c]	1.08E-05	0.73E-05	0.57E-05	0.79E-05
lb/ton pushed[d]	9.08E-08	6.55E-08	4.92E-08	6.85E-08
Fluorene				
μg/dscm[a]	0.07	0.05	0.04	0.05
μg/hr[b]	1.05E+04	0.75E+04	0.53E+04	0.78E+04
lb/hr[c]	2.32E-05	1.65E-05	1.16E-05	1.71E-05
lb/ton pushed[d]	1.94E-07	1.47E-07	1.02E-07	1.48E-07
Phenanthrene				
μg/dscm[a]	0.28	0.17	0.11	0.19
μg/hr[b]	4.12E+04	2.62E+04	1.60E+04	2.78E+04
lb/hr[c]	9.09E-05	5.77E-05	3.53E-05	6.13E-05
lb/ton pushed[d]	7.62E-07	5.16E-07	3.08E-07	5.29E-07
Anthrancene				
μg/dscm[a]	0.020	0.007	0.004	0.010
μg/hr[b]	2,946	1,051	528	1,508
lb/hr[c]	6.49E-06	2.32E-06	1.16E-06	3.33E-06
lb/ton pushed[d]	5.45E-08	2.07E-08	1.02E-08	2.85E-08
Fluoranthene				
μg/dscm[a]	0.12	0.04	0.03	0.06
μg/hr[b]	1.68E+04	0.66E+04	0.40E+04	0.91E+04
lb/hr[c]	3.71E-05	1.46E-05	0.87E-05	2.02E-05
lb/ton pushed[d]	3.11E-07	1.31E-07	0.76E-07	1.73E-07

TABLE 2.19 (continued)

Run No.	B-O-429-1	B-O-429-2	B-O-429-3	Average
Pyrene				
μg/dscm[a]	0.07	0.03	0.02	0.04
μg/hr[b]	9,819	4,978	2,535	5,778
lb/hr[c]	2.16E-05	1.10E-05	0.56E-05	1.27E-05
lb/ton pushed[d]	1.82E-07	0.98E-07	0.49E-07	1.10E-07
Benzo(a) Anthrancene				
μg/dscm[a]	0.013	0.008	0.004	0.008
μg/hr[b]	1,929	1,189	607	1,242
lb/hr[c]	4.25E-06	2.62E-06	1.34E-06	2.74E-06
lb/ton pushed[d]	3.57E-08	2.35E-08	1.17E-08	2.36E-08
Chrysene				
μg/dscm[a]	0.027	0.025	0.011	0.021
μg/hr[b]	3,858	3,872	1,664	3,131
lb/hr[c]	8.50E-06	8.54E-06	3.67E-06	6.90E-06
lb/ton pushed[d]	7.13E-08	7.64E-08	3.20E-08	5.99E-08
Benzo(b) Fluoranthene				
μg/dscm[a]	0.018	0.011	0.007	0.012
μg/hr[b]	2,560	1,742	1,004	1,769
lb/hr[c]	5.64E-06	3.84E-06	2.21E-06	3.90E-06
lb/ton pushed[d]	4.73E-08	3.44E-08	1.93E-08	3.37E-08
Benzo(k) Fluoranthene				
μg/dscm[a]	0.016	0.006	0.005	0.009
μg/hr[b]	2,385	885	660	1,310
lb/hr[c]	5.26E-06	1.95E-06	1.46E-06	2.89E-06
lb/ton pushed[d]	4.41E-08	1.75E-08	1.27E-08	2.47E-08
Benzo(e) Pyrene				
μg/dscm[a]	0.012	0.006	0.004	0.007
μg/hr[b]	1,683	913	634	1,077
lb/hr[c]	3.71E-06	2.01E-06	1.40E-06	2.37E-06
lb/ton pushed[d]	3.11E-08	1.80E-08	1.22E-08	2.04E-08
Benzo(a) Pyrene				
μg/dscm[a]	0.012	0.005	0.004	0.007
μg/hr[b]	1,683	747	528	986
lb/hr[c]	3.71E-06	1.65E-06	1.16E-06	2.17E-06
lb/ton pushed[d]	3.11E-08	1.47E-08	1.02E-08	1.87E-08
Perylene				
μg/dscm[a]	0.003	0.002	ND	0.002
μg/hr[b]	386	360	ND	248
lb/hr[c]	8.50E-07	7.93E-07	ND	5.48E-07
lb/ton pushed[d]	7.13E-09	7.10E-09	ND	4.74E-09
Indeno(1,2,3-cd) Pyrene				
μg/dscm[a]	0.015	0.005	0.005	0.008
μg/hr[b]	2,209	830	660	1,233
lb/hr[c]	4.87E-06	1.83E-06	1.46E-06	2.72E-06
lb/ton pushed[d]	4.08E-08	1.64E-08	1.27E-08	2.33E-08

TABLE 2.19 (concluded)

Run No.	B-O-429-1	B-O-429-2	B-O-429-3	Average
Dibenz(a,h) Anthracene				
μg/dscm[a]	0.003	ND	ND	0.001
μg/hr[b]	491	ND	ND	163.3
lb/hr[c]	1.08E-06	ND	ND	0.36E-06
lb/ton pushed[d]	9.08E-09	ND	ND	3.03E-09
Benzo(g,h,i) Perylene				
μg/dscm[a]	0.034	0.008	0.011	0.018
μg/hr[b]	4,910	1,245	1,690	2,615
lb/hr[c]	1.08E-05	2.74E-06	3.73E-06	5.76E-06
lb/ton pushed[d]	9.08E-08	2.46E-08	3.25E-08	4.93E-08

[a]Micrograms per dry standard cubic meter.
[b]Micrograms per hour.
[c]Pounds per hour.
[d]Pounds per ton of coke pushed.

Note: All data presented are weighted averages based on both push and non-push periods.

TABLE 2.20

PAH EMISSIONS SAMPLING AND FLUE GAS PARAMETERS - UNDERFIRE STACK BETHLEHEM STEEL,CHESTERTON, INDIANA

Run No.	B-U-429-1	B-U-429-2	B-U-429-3	Average
Date	08/14/98	08/14/98	08/15/98	--
Total Sampling Time, minutes	180	180	180	180
Tons of Coal Charged Per Hour	159.0	142.3	157.1	152.8
Avg. Sampling Rate, dscfm[a]	0.494	0.558	0.609	0.554
Sample Volume: dscf[b] dscm[c]	 88.949 2.519	 100.360 2.842	 109.683 3.106	 99.664 2.822
Avg. Flue Gas Temp, °F	453	448	440	447
O_2 Conc., % by Volume	11.3	9.6	10.5	10.4
CO_2 Conc., % by Volume	4.4	5.5	5.0	5.0
Moisture, % by Volume	17.3	21.1	14.1	17.5
Flue Gas Volumetric Flow Rate: acfm[d] dscfm[a] dscmm[e]	 173,886 82,595 2,339	 201,774 92,035 2,606	 171,478 85,412 2,419	 182,379 86,681 2,455
Isokinetic Sampling Ratio, %	96.0	100.8	99.1	98.6

[a]Dry standard cubic feet per minute at 68°F (20°C) and 1 atm.
[b]Dry standard cubic feet at 68°F (20°C) and 1 atm.
[c]Dry standard cubic meters at 68°F (20°C) and 1 atm.
[d]Actual cubic feet per minute at flue gas conditions.
[e]Dry standard cubic meters per minute at 68°F (20°C) and 1 atm.

moisture content of 17.5%. Flue gas volumetric flow rates averaged 182,379 acfm or 86,681 dscfm or 2,455 dscmm. Isokinetic sampling rate averaged 98.6%.

Table 2.21 summarizes the PAH concentrations and emission rates for the underfire stack. All of the target PAH analytes were detected in the analyzed samples with the exception of perylene and dibenz(a,h) anthracene (for Run Nos. 2 and 3). Naphthalene, 2-methyl naphthalene and phenanthrene were present in the highest concentrations.

TABLE 2.21

PAH CONCENTRATIONS AND EMISSION RATES
UNDERFIRE STACK
BETHLEHEM STEEL, CHESTERTON, INDIANA

Run No.	B-U-429-1	B-U-429-2	B-U-429-3	Average
Date	08/14/98	08/14/98	08/15/98	--
Clock Time, 24 hr Clock	0921-1325	1441-1809	0838-1208	--
Naphthalene				
μg/dscm[a]	4.16	10.73	57.79	24.22
μg/hr[b]	5.83E+05	16.77E+05	83.86E+05	35.48E+05
lb/hr[c]	1.29E-03	3.70E-03	18.5E-03	7.82E-03
lb/ton charged[d]	0.81E-05	2.60E-05	11.8E-05	5.06E-05
2-Methyl naphthalene				
μg/dscm[a]	2.30	0.70	2.64	1.88
μg/hr[b]	3.225E+05	1.09E+05	3.82E+05	2.71E+05
lb/hr[c]	7.11E-04	2.41E-04	8.43E-04	5.98E-04
lb/ton charged[d]	4.47E-06	1.69E-06	5.37E-06	3.84E-06
Acenaphthylene				
μg/dscm[a]	0.38	0.10	0.84	0.44
μg/hr[b]	5.29E+04	1.60E+04	12.15E+04	6.35E+04
lb/hr[c]	1.17E-04	0.35E-04	2.68E-04	1.40E-04
lb/ton charged[d]	7.34E-07	2.47E-07	17.0E-07	8.95E-07
Acenaphthene				
μg/dscm[a]	0.08	0.04	0.14	0.09
μg/hr[b]	1.05E+04	0.61E+04	2.10E+04	1.26E+04
lb/hr[c]	2.33E-05	1.33E-05	4.64E-05	2.77E-05
lb/ton charged[d]	1.47E-07	0.94E-07	2.95E-07	1.79E-07
Fluorene				
μg/dscm[a]	0.32	0.08	0.42	0.27
μg/hr[b]	4.51E+04	1.27E+04	6.07E+04	3.95E+04
lb/hr[c]	9.95E-05	2.79E-05	13.4E-05	8.71E-05
lb/ton charged[d]	6.26E-07	1.96E-07	8.52E-07	5.58E-07
Phenanthrene				
μg/dscm[a]	0.63	0.25	0.54	0.47
μg/hr[b]	8.78E+04	3.88E+04	7.83E+04	6.83E+04
lb/hr[c]	1.94E-04	0.86E-04	1.73E-04	1.51E-04
lb/ton charged[d]	1.22E-06	0.60E-06	1.10E-06	0.97E-06
Anthrancene				
μg/dscm[a]	0.02	0.01	0.03	0.02
μg/hr[b]	2,841	1,100	4,018	2,653
lb/hr[c]	6.26E-06	2.43E-06	8.86E-06	5.85E-06
lb/ton charged[d]	3.94E-08	1.70E-08	5.64E-08	3.76E-08
Fluoranthene				
μg/dscm[a]	0.17	0.08	0.20	0.15
μg/hr[b]	2.40E+04	1.21E+04	2.90E+04	2.17E+04
lb/hr[c]	5.28E-05	2.67E-05	6.39E-05	4.78E-05
lb/ton charged[d]	3.32E-07	1.88E-07	4.06E-07	3.09E-07

TABLE 2.21 (continued)

Run No.	B-U-429-1	B-U-429-2	B-U-429-3	Average
Pyrene				
μg/dscm[a]	0.07	0.03	0.07	0.06
μg/hr[b]	9,471	4,402	10,279	8,051
lb/hr[c]	2.09E-05	0.97E-05	2.27E-05	1.78E-05
lb/ton charged[d]	1.31E-07	0.68E-07	1.44E-07	1.15E-07
Benzo(a) Anthrancene				
μg/dscm[a]	0.02	0.01	0.02	0.02
μg/hr[b]	2,507	1,376	3,364	2,416
lb/hr[c]	5.53E-06	3.03E-06	7.42E-06	5.33E-06
lb/ton charged[d]	3.48E08	2.13E-08	4.72E-08	3.44E-08
Chrysene				
μg/dscm[a]	0.05	0.02	0.05	0.04
μg/hr[b]	6,686	3,246	7,476	5,803
lb/hr[c]	1.47E-05	0.72E-05	1.65E-05	1.28E-05
lb/ton charged[d]	9.27E-08	5.03E-08	10.5E-08	8.26E-08
Benzo(b) Fluoranthene				
μg/dscm[a]	0.03	0.02	0.02	0.02
μg/hr[b]	4,234	2,476	2,990	3,234
lb/hr[c]	9.33E-06	5.46E-06	6.59E-06	7.13E-06
lb/ton charged[d]	5.87E-08	3.84E-08	4.20E-08	4.63E-08
Benzo(k) Fluoranthene				
μg/dscm[a]	0.02	0.01	0.01	0.01
μg/hr[b]	2,786	1,706	1,822	2,105
lb/hr[c]	6.14E-06	3.76E-06	4.02E-06	4.64E-06
lb/ton charged[d]	3.86E-08	2.64E-08	2.56E-08	3.02E-08
Benzo(e) Pyrene				
μg/dscm[a]	0.02	0.01	0.01	0.01
μg/hr[b]	2,340	1,761	1,589	1,896
lb/hr[c]	5.16E-06	3.88E-06	3.50E-06	4.18E-06
lb/ton charged[d]	3.25E-08	2.73E-08	2.23E-08	2.73E-08
Benzo(a) Pyrene				
μg/dscm[a]	0.02	0.01	0.01	0.01
μg/hr[b]	2,619	1,321	1,495	1,811
lb/hr[c]	5.77E-06	2.91E-06	3.30E-06	3.99E-06
lb/ton charged[d]	3.63E-08	2.05E-08	2.10E-08	2.59E-08
Perylene				
μg/dscm[a]	0.01	ND	ND	0.00
μg/hr[b]	669	ND	ND	223
lb/hr[c]	1.47E-06	ND	ND	4.91E-07
lb/ton charged[d]	9.27E-09	ND	ND	3.09E-09
Indeno(1,2,3-cd) Pyrene				
μg/dscm[a]	0.017	0.011	0.011	0.013
μg/hr[b]	2,451	1,761	1,635	1,949
lb/hr[c]	5.40E-06	3.88E-06	3.62E-06	4.30E-06
lb/ton charged[d]	3.40E-08	2.73E-08	2.29E-08	2.81E-08

TABLE 2.21 (concluded)

Run No.	B-U-429-1	B-U-429-2	B-U-429-3	Average
Dibenz(a,h) Anthracene				
μg/dscm[a]	0.005	ND	ND	0.002
μg/hr[b]	669	ND	ND	223
lb/hr[c]	1.47E-06	ND	ND	4.91E-07
lb/ton charged[d]	9.27E-09	ND	ND	3.09E-09
Benzo(g,h,i) Perylene				
μg/dscm[a]	0.03	0.03	0.02	0.03
μg/hr[b]	4,513	4,292	2,944	3,916
lb/hr[c]	9.95E-06	9.46E-06	6.49E-06	8.63E-06
lb/ton charged[d]	6.26E-08	6.65E-08	4.13E-08	5.68E-08

[a]Micrograms per dry standard cubic meter.
[b]Micrograms per hour.
[c]Pounds per hour.
[d]Pounds per ton of coal charged.

3.0 PROCESS AND CONTROL EQUIPMENT OPERATION

3.1 INTRODUCTION

Bethlehem Steel Corporation produces coke from two 6-meter coke oven batteries at their Burns Harbor facility. Both batteries have 82 ovens and a gross coking time of 18 hours. They are positioned end-to-end and served by a common rail.

Battery No. 1 is a McKee-Otto design which began operation in 1969 and was rebuilt from the pad up in 1983. The battery uses a combination of 50% (by volume) blast furnace gas (BFG) and 50% (by volume) coke oven gas (COG) to fuel combustion in a twin flue underjet system. Pushing emissions are captured by a Minister Stein hood and vented via a fixed duct to a venturi scrubber.

Battery No. 2 is a Still/Otto design which began operation in 1972 and was rebuilt from the pad up in 1994. The battery uses 100% COG to fuel combustion in an underjet system. Pushing emissions are captured by a Minister Stein hood and vented via a fixed duct to a baghouse.

Both batteries operate state-of-the-art Minister Stein capture systems. Battery No. 2 was selected for testing due to several factors. Baghouses are more representative of the control devices used at coke ovens than venturi scrubbers; 45 batteries currently in operation use baghouses for pushing emission control, and only 10 batteries use wet scrubbers. Also, Battery No. 2 operates on 100% COG, which is more common than a blend of COG and BFG.

3.2 PROCESS DESCRIPTION

3.2.1 Pushing

The pushing sequence used at Burns Harbor is the "Koppers minus 10" system, in which ovens 1, 11, 21... are pushed, followed by ovens 3, 13, 23.... The even-numbered ovens, 2, 22, 32...through 8, 18, 28...are pushed after the odd-numbered ovens. Since there are no zeros in any of the oven numbers, the battery's 82 ovens number from 1 to 92. The number of each oven in Battery No. 2 is preceded by a "2" (i.e. ovens 1, 11, 21 would be referred to as 21, 211, 221).

An average of 31.5 tons of coal is charged into each oven, and an average of 23.8 tons of coke is produced per coking cycle. The battery is operated 24 hours a day, 7 days a week;

however, charging and pushing are stopped for 1 to 1.5 hours once a week for battery maintenance and repairs.

Pushing emissions are captured by a moveable hood attached to a fixed duct system. The hood connects with the hooded coke guide and covers the quench car during pushing. When the dampers are open, the duct is open to the baghouse where a fan evacuates emissions from the hood. The hood in place at Battery No. 2 is a modified Minister Stein design; a tripper car moves under the belt which seals the top of the duct; the tripper car and fume hood are connected by a telescoping duct (see Figure 3.1).

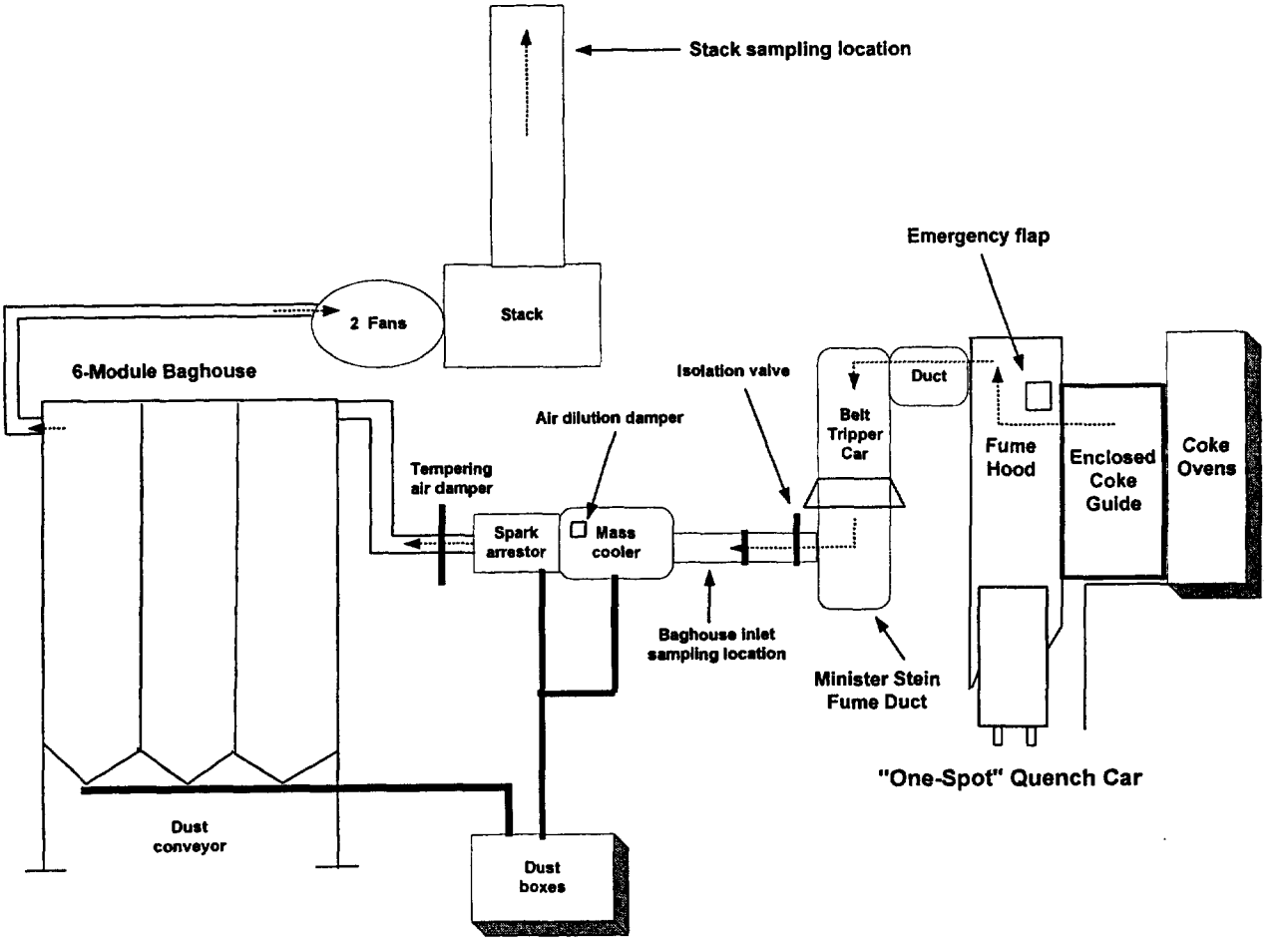

Figure 3.1 Schematic of Pushing Emission Control for Battery No. 2

Typically three ovens in advance of the next oven to be pushed are dampered off the collection main. The standpipe cap and mini-standpipe cap are then opened. Ovens are dampered off for approximately 30 minutes prior to being pushed. Just prior to pushing, the door machine removes the coke side door and positions the coke guide; the pusher machine removes the pusher side door and aligns the pushing ram. The quench car is moved into position beneath the hood. The door machine operator then opens the hood isolation damper, and the baghouse damper is opened. A push, from the time the pushing ram starts to move until the quench car

reaches the quench tower, takes approximately 75 seconds. A push typically occurs every 10 to 15 minutes. After an oven is pushed, the door jambs are automatically cleaned on both the pusher and coke sides, and the doors are replaced. The ovens are charged in the order in which they were pushed. Typical coking time (from coal charge to coke push) is 18 hours.

Pushing emissions captured by the hood travel through the fixed duct to a 6-compartment baghouse. The baghouse was installed in 1994 and has a volumetric flow rate of 205,000 to 216,000 acfm. Of the 6 baghouse compartments, at least 4 are always on-line; one is usually out of service for cleaning, and one can be out of service for maintenance at any given time. Each compartment houses 352 12-foot-long Nomex bags. The bags are precoated with 1.5 pounds of lime per pulse jet cleaning cycle. A total of 3,100 pounds of lime is injected into the baghouse per day. Pressure drop (delta p) is measured across the baghouse rather than across individual compartments, and ranges from 4.4 to 8.8 inches of water. Air temperature in the baghouse ranges from 300°F at the inlet to 140 - 160°F at the outlet. The gross filtering area is 40,440 ft^2, the net filtering area (with one module offline for cleaning) is 33,700 ft^2, and the net air-to-cloth ratio is 5.94 $acfm/ft^2$.

3.2.2 Underfiring

The combustion, or underfiring, system regulates COG, air, and waste gas. Prior to being used for combustion, raw COG is processed in a by-product recovery plant where tar and naphthalene are removed and ammonia is recovered as ammonium sulfate. Approximately 30% of the "clean" gas is used for underfiring, and the balance is used in other parts of the Burns Harbor facility. COG is not desulfurized prior to being used at the coke ovens.

Battery No. 2 is equipped with an underjet combustion system with double pair flues that uses multiple staged air and is fueled solely by COG. Combination air inlet/waste heat boxes are located on the coke side of the battery. The average flue temperature is 2,400°F. Combustion of COG and air takes place in every other pair of heating flues. Waste gas is formed as a product of combustion and flows downward in every other pair of heating flues through the regenerators and out the battery stack. The battery "reverses" every 20 minutes: waste heat flues become combustion flues and combustion flues become waste heat flues. Two channels carry waste gas from the battery to the combustion stack. They are referred to as the North tunnel stack and South tunnel stack, and both discharge to the combustion stack.

Several factors can affect emissions from the combustion stack, including incomplete combustion in the flues or cracks in the brickwork between an oven chamber and flue. Incomplete combustion is typically the result of excess gas and/or insufficient air in the system. Excess emissions from damaged brickwork or overly decarbonized ovens is most notable just after an oven is charged because gases from combusted coal dust are forced through cracks during charging.

The Burns Harbor facility uses state-of-the-art instrumentation and monitoring to maintain efficient combustion. This includes an O_2 monitor, a continuous opacity monitor (COM), and a waste heat temperature monitor. The COM is equipped to alarm when opacity

exceeds the state limit of 20% for Battery No. 2. Heating personnel then check the most recently charged oven for wall leakage.

3.3 PROCESS AND CONTROL DEVICE MONITORING

3.3.1 Pushing

Several parameters were monitored during each test run. Process parameters monitored included the identification of each oven being pushed, the total quantity of coal charged to each oven that was pushed during each run, and the total quantity of coke pushed during each run. Control parameters monitored included fan amps, pressure drop, and inlet pressure. The baghouse is controlled by a programmable logic controller (PLC) which continuously sends readings of these parameters to several computer terminals around the plant. A summary of the parameter values recorded during testing is presented in Table 3.1. A more detailed summary (one reading during each push) is presented in Appendix A.

Visual observations of pushes were made during all three test runs to assess capture efficiency of the hood and to note any differences in uncontrolled emissions. Excellent capture of pushing emissions by the hood system resulted in relatively low fugitive emissions during most pushes, which includes travel to the quench tower. After a few pushes, thick, dark emissions were observed from the door area of the oven; however, the quench car usually remained under the hood for a longer period of time after these pushes, and fugitive emissions from the quench car remained low.

TABLE 3.1

SUMMARY OF PUSHING PROCESS AND CONTROL DEVICE PARAMETERS

Parameter:	Run No. 1	Run No. 2	Run No. 3
Average Coal/Charge (tons)	32.5	32.2	32.8
Average Coking Time (hours)	18.6	17.9	17.8
Average Fan Amps	47	47	46
Average Delta P (in. H_2O)	5.8	6	5.8
Average Inlet Pressure (in. H_2O)	1.4	1	1.4
Average Damper Opening (%)	51[a]	52[a]	52[a]
Total Coal Charged (tons)	1,494	1,515	1,671
Total Coke Pushed (tons)	1,115	1,128	1,244

[a] Damper openings are controlled to provide at least 200,000 acfm during the push.

3.3.2 Underfiring

Control parameters monitored during combustion stack testing included: opacity, stack draft, percent excess oxygen, fuel gas flow rate and waste heat temperature. All of these parameters are continuously monitored, and the values are sent to computer terminals at several sites around the plant. COM readings are sent to computer terminals as well as a traditional chart recorder which logs 6-minute averages. Opacity from the stack is also read manually three times per week by a certified opacity reader. Process parameters monitored during testing included the number of each oven charged and the quantities of coal charged and coke produced during each run.

The data presented is primarily from continuous readings logged by the plant computer system. Opacity data is in the form of 6-minute averages from the plant's COM chart recorder. Waste heat temperature, stack draft and excess oxygen are continuously monitored in both the North tunnel stack and South tunnel stack, both of which empty into the battery's combustion stack. Control parameter values during testing are summarized in Tables 3.2a through 3.2c.

For all three test runs, stack draft ranged from 17.1 to 23.5 millimeters of water, excess oxygen ranged from 3.5 to 22%, and the waste heat temperature ranged from 438 to 472 °F. The amount of dry coal charged per oven ranged from 31.8 to 33.3 tons. The average amount of coke produced per oven was 24.4 tons. A total of 481 tons of coke was produced from the ovens charged during Run No. 1, 365 tons during Run No. 2, and 414 tons during Run No. 3, for a total of 1,260 tons of coke produced during all three test runs. COM data indicate that 6-minute averages for opacity ranged from approximately 3 to 7% during testing (see Figures 3.2 and 3.3 in Appendix A, respectively).

TABLE 3.2A

COMBUSTION STACK PARAMETERS TEST RUN NO. 1, 8/14/98

Time	Oven	Dry Coal Weight (lbs)	Underfire Gas Flow Rate (kscfh[a])	Stack Excess O_2 (%)		Stack Draft (mm H_2O)		Stack Temperature (°F)	
				North	South	North	South	North	South
9:25:00	221	64,446	679	5.4	6	23.2	23.2	440	432
9:35:00	231	63,605	671	5.4	6	23.2	23	448	445
9:47:00	241	64,072	625	9	6	23.1	23.1	449	433
9:58:00	251	64,446	762	18	---	---	19.3	466	441
10:08:00	261	64,633	678	5.6	6.6	23.4	23	441	436
10:18:00	271	64,539	764	18	---	---	18.8	449	448
10:27:00	281	64,259	637	8.2	6.2	22.9	22.9	450	433
10:43:00	291	65,940	672	5.1	5.8	23.1	22.9	443	433
10:57:00	203	64,726	668	5	5.8	23.3	23.2	450	448
11:07:00	213	64,633	637	8.3	6.3	23.4	23.2	451	434
11:17:00	223	64,726	667	5.7	5.8	23	22.8	472	442
11:38:00	233	65,847	767	19	---	---	19	447	448
11:47:00	243	63,886	630	8	5.8	23.1	22.9	451	434
11:57:00	253	64,446	673	5.5	6	23.2	23	471	443
12:07:00	263	64,633	643	8	5.7	23.2	22.8	440	436
12:30:00	273	64,726	670	4.8	5.4	23.2	23.3	457	436
12:39:00	283	64,446	687	3.6	4.8	22.3	22.1	460	439
12:50:00	205	64,820	670	5.3	5.9	23.1	23.1	443	440
13:01:00	215	65,193	667	5.3	5.8	22.5	22.8	444	439
13:11:00	225	65,567	671	5.2	5.5	23.5	23.1	458	437

[a] 1,000 standard cubic feet per hour

TABLE 3.2B

COMBUSTION STACK PARAMETERS: TEST RUN NO. 2, 8/14/98

Time	Oven	Dry Coal Weight (lbs)	Underfire Gas Flow Rate (kscfh[a])	Stack Excess O_2 (%)		Stack Draft (mm H_2O)		Stack Temperature (°F)	
				North	South	North	South	North	South
15:19:00	207	65,660	684	4.4	5.3	22.3	22.1	463	439
15:31:00	217	65,193	681	6.1	6	23.3	23.1	445	440
15:40:00	227	66,127	659	6.2	6.1	22.5	22.7	444	440
15:50:00	237	64,633	678	5.6	5.8	23.3	23.2	456	436
16:02:00	247	65,660	667	5.1	5.5	23	23.1	448	433
16:13:00	257	63,886	668	5.3	5.9	23.2	23.2	448	442
16:22:00	267	65,940	661	5.5	5.9	23	23	446	437
16:32:00	277	65,380	666	5.1	5.1	23.3	23.3	464	436
16:44:00	287	64,820	655	5.2	5.7	23.5	23.4	445	433
17:03:00	209	66,407	664	5.2	5.6	23.4	23.2	447	437
17:11:00	219	65,380	674	5.2	5.6	23.3	23.1	462	437
17:20:00	239	66,594	669	5.4	5.7	22.7	22.7	458	436
17:35:00	239	64,353	665	4.7	5.4	23.4	23.3	453	447
17:44:00	249	65,940	667	5.6	5.9	22.9	22.9	451	435
18:00:00	259	65,287	671	4.7	5.4	22.6	22.5	462	435

[a] 1,000 standard cubic feet per hour

TABLE 3.2C

COMBUSTION STACK PARAMETERS: TEST RUN NO. 3, 8/15/98

Time	Oven	Dry Coal Weight (lbs)	Underfire Gas Flow Rate (kscfh[a])	Stack Excess O_2 (%)		Stack Draft (mm H_2O)		Stack Temperature (°F)	
				North	South	North	South	North	South
8:39:00	275	65,261	679	3.5	4.9	22.1	22.2	458	436
8:50:00	285	64,705	648	5.9	6.3	23.2	23.2	438	436
9:02:00	207	64,334	649	6.1	6	23.1	23.2	441	433
9:13:00	217	65,817	635	5.8	5.9	23.3	23.1	460	436
9:23:00	227	64,334	627	6.2	6.5	23.2	23.1	440	430
9:33:00	237	65,632	629	5.8	6.1	23.4	23.2	441	440
9:43:00	247	63,963	637	6.7	6.4	22.9	23	442	433
10:04:00	257	65,354	639	6	6.4	23.1	23.3	439	430
10:14:00	267	65,354	645	5.8	6.2	23.2	23	441	441
10:24:00	277	63,963	633	5.9	6.5	23	23	443	432
10:34:00	287	65,632	644	6.3	7.4	23.2	23.3	462	438
10:58:00	209	64,519	714	22	---	---	17.7	446	446
11:08:00	219	63,500	629	6.3	7.8	23.3	23.2	450	432
11:18:00	229	65,817	767	22	---	---	18.4	468	441
11:27:00	239	64,056	598	8.6	6.2	23.2	23.1	438	433
11:37:00	249	64,612	640	6.2	6.1	23.2	23.1	447	446
11:57:00	259	63,500	646	5.6	5.8	22.8	22.6	469	441

[a] 1,000 standard cubic feet per hour

4.0 SAMPLING LOCATIONS

Source sampling was conducted at Coke Oven Battery No. 2 at the Bethlehem Steel Corporation's Burns Harbor Division in Chesterton, Indiana. Prior to sampling all locations were checked for the presence of non-parallel or cyclonic flow as outlined in Section 2.4 of EPA Method 1. At all three sampling locations, the average rotation angle for a null reading was well below the EPA Method 1 criteria of 20°. Therefore, sampling at each location was conducted without site modifications. Brief descriptions and schematic diagrams of the sampling locations are presented below.

4.1 COKE OVEN BATTERY NO. 2

4.1.1 Baghouse Inlet

The baghouse inlet test location was located in a 114-inch inside diameter (ID) round horizontal duct which leads from the coke oven pushing operation to the inlet of the baghouse. This location was upstream of the mass cooler and dilution air damper (see Figure 3.1 in Section 3.2.1). Four sampling ports were positioned as shown in Figure 4.1. The two upper sample ports were used for EPA Method 315 and CARB Method 429 isokinetic sampling. One of the other two sample ports was used for the NIOSH Method 5506 sampling. This location was 572 inches (5.0 duct diameters) downstream of the nearest flow disturbance (45° elbow) and 181 inches (1.6 duct diameters) upstream of the nearest flow disturbance (45° elbow). According to EPA Method 1 criteria, this location required 20 sample traverse points, 10 along each of two perpendicular diameters. The results of the EPA Method 1 calculations and the locations of the traverse points are presented in Figure 4.2.

4.1.2 Baghouse Outlet

The baghouse outlet sampling location was located in a 108-inch ID round vertical stack which was downstream of the baghouse. Four sampling ports were positioned as shown in Figure 4.3. On one of the four ports, a longer coupling was required to in order to clear an obstacle. Therefore, two sets of sample traverse points were required. All four ports were used for the EPA method 315 and CARB Method 429 isokinetic sampling. The NIOSH Method 5506 sampling was conducted in one of the four ports not being used for the isokinetic sampling. This location was 660 inches (6.1 stack diameters) downstream of the nearest flow disturbance (baghouse fans) and 330 inches (3.1 stack diameters) upstream of the atmosphere. According to EPA Method 1 criteria, this location required 16 sample traverse points, four in each of the four sample ports. The results of the EPA Method 1 calculations and the locations of the traverse points are presented in Figure 4.4.

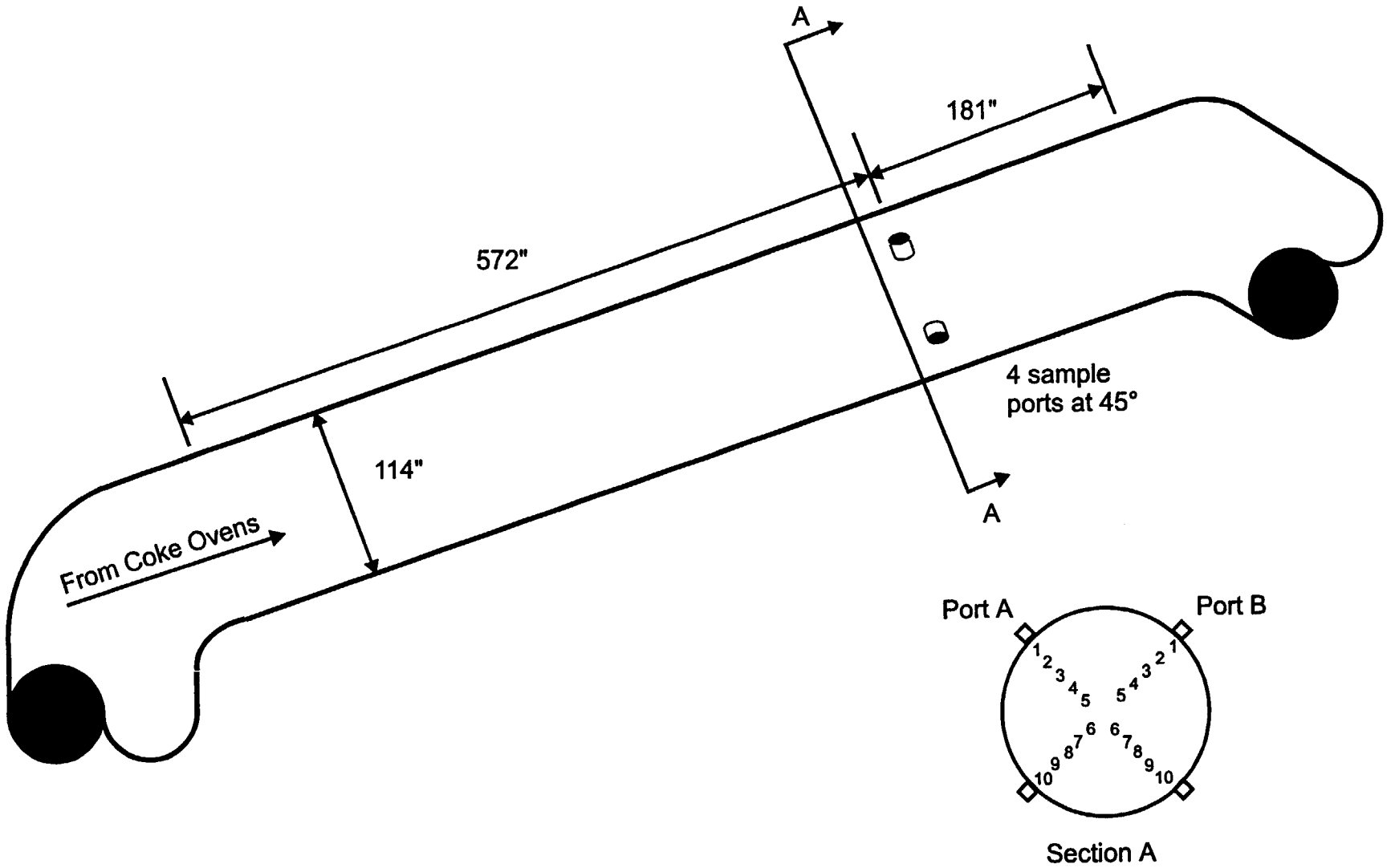

Figure 4.1 Baghouse Inlet Sample Location, Bethlehem Steel Corp., Chesterton, Indiana

Circular Stack Method 1 Calculation Results

Date: 11/03/98 Time: 14:03:30

Facility:	Bethlehem Steel, Burns Harbor
Source ID:	BH Inlet
Source Name:	Coke Oven 2, Baghouse Inlet
Date:	11/02/98
Calculated By:	F. Meadows

Input Values

Traverse Point Type:	Sample - M5	
Inside of far wall to outside of nipple:	120 1/4	(inches)
Nipple Length:	6 1/4	(inches)
Distance from Upstream Disturbance:	572 even	(inches)
Distance from Downstream Disturbance:	181 even	(inches)
Number of ports:	2 ports at 90 degrees	

Calculated Values

Inside Diameter:	114.0000	(inches)
Upstream Duct Diameters:	5.01	
Downstream Duct Diameters:	1.58	
Mininum Traverse Points:	20	

Traverse Point Number	Fraction of Length	Length (inches)	Product of Columns 2 and 3	Nipple Length (inches)	Traverse Point Location Sum of Cols 4 & 5
1	0.026	114 even	2 15/16	6 1/4	9 3/16
2	0.082	114 even	9 3/8	6 1/4	15 5/8
3	0.146	114 even	16 5/8	6 1/4	22 7/8
4	0.226	114 even	25 3/4	6 1/4	32 even
5	0.342	114 even	39 even	6 1/4	45 1/4
6	0.658	114 even	75 even	6 1/4	81 1/4
7	0.774	114 even	88 1/4	6 1/4	94 1/2
8	0.854	114 even	97 3/8	6 1/4	103 5/8
9	0.918	114 even	104 5/8	6 1/4	110 7/8
10	0.974	114 even	111 1/16	6 1/4	117 5/16

Figure 4.2 Baghouse Inlet Traverse Point Locations, Bethlehem Steel Corp., Chesterton, Indiana

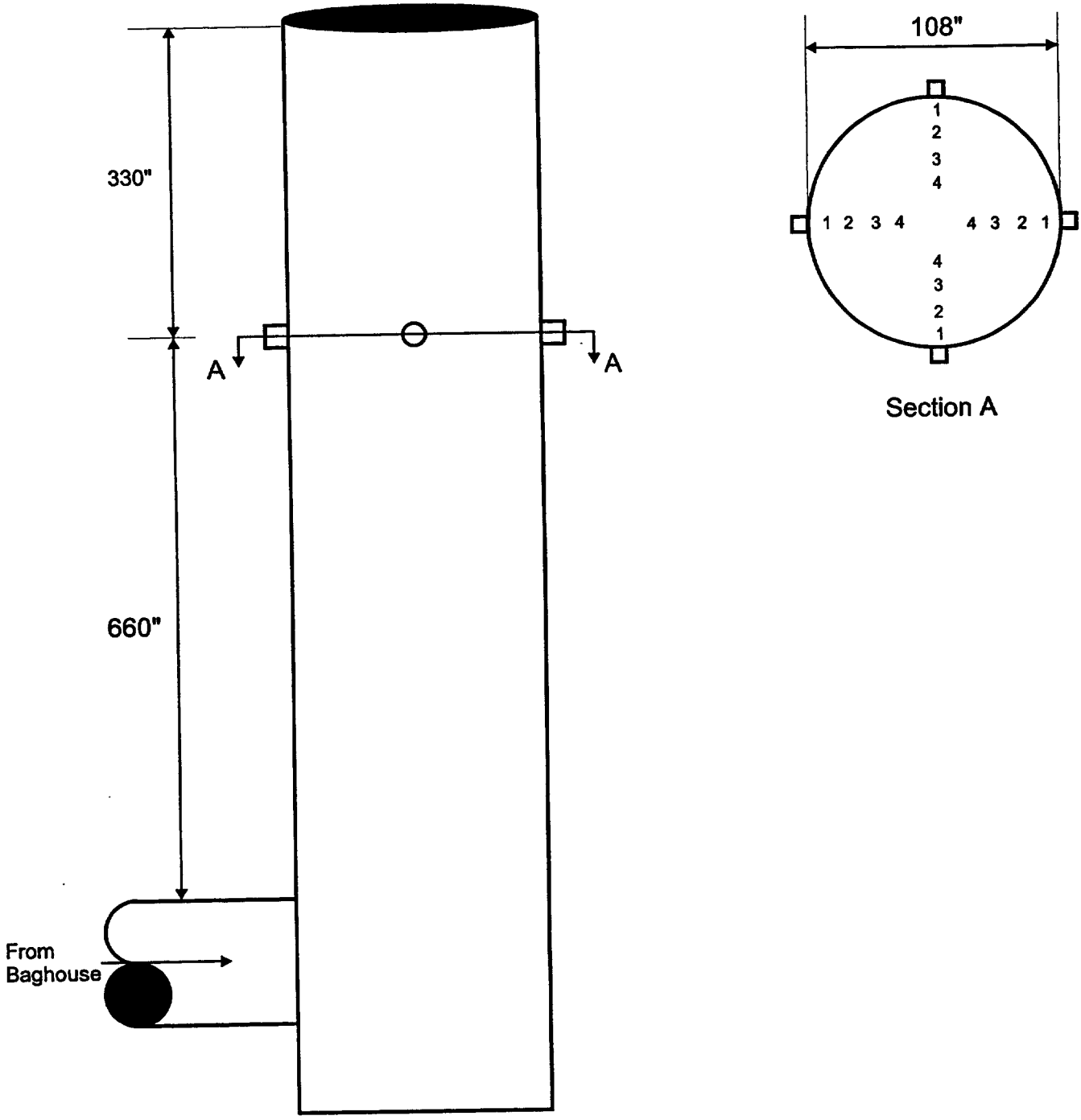

Figure 4.3 Baghouse Outlet Sample Location, Bethlehem Steel Corp., Chesterton, Indiana

Circular Stack Method 1 Calculation Results

Date: 11/09/98 Time: 12:45:09

Facility:	Bethlehem Steel, Burns Harbor
Source ID:	BH Outlet
Source Name:	Coke Oven 2, Baghouse Outlet
Date:	11/09/98
Calculated By:	F. Meadows

Input Values

Traverse Point Type:	Sample - M5	
Inside of far wall to outside of nipple:	116 even	(inches)
Nipple Length:	8 even	(inches)
Distance from Upstream Disturbance:	660 even	(inches)
Distance from Downstream Disturbance:	330 even	(inches)
Number of ports:	4 ports at 90 degrees	

Calculated Values

Inside Diameter:	108	(inches)
Upstream Duct Diameters:	6.11	
Downstream Duct Diameters:	3.05	
Mininum Traverse Points:	16	

Traverse Point Number	Fraction of Length	Length (inches)	Product of Column 2 & 3	Nipple Length (inches)	Traverse Point Location Sum of Col. 4 & 5
1	0.032	108 even	3 7/16	8 even	11 7/16
2	0.105	108 even	11 5/16	8 even	19 5/16
3	0.194	108 even	20 15/16	8 even	28 15/16
4	0.323	108 even	34 7/8	8 even	42 7/8

Input Values

Traverse Point Type:	Sample - M5	
Inside of far wall to outside of nipple:	125 1/2	(inches)
Nipple Length:	17 1/2	(inches)
Distance from Upstream Disturbance:	660 even	(inches)
Distance from Downstream Disturbance:	330 even	(inches)
Number of ports:	4 ports at 90 degrees	

Traverse Point Number	Fraction of Length	Length (inches)	Product of Column 2 & 3	Nipple Length (inches)	Traverse Point Location Sum of Col. 4 & 5
1	0.032	108 even	3 7/16	17 1/2	20 15/16
2	0.105	108 even	11 5/16	17 1/2	28 13/16
3	0.194	108 even	20 15/16	17 1/2	38 7/16
4	0.323	108 even	34 7/8	17 1/2	52 3/8

Figure 4.4 Baghouse Outlet, Traverse Point Locations, Bethlehem Steel Corp., Chesterton, Indiana

4.1.3 Combustion (Underfire) Stack

The combustion (underfire) stack test location was located in a 177-inch ID round vertical stack. The stack is a double wall stack with a slight decreasing diameter with the increase of vertical stack height. There were no elbows or bends in the stack to affect the direction of air flow. Four sampling ports were positioned as shown in Figure 4.5. All four sample ports were used for the EPA Method 315 and CARB Method 429 isokinetic sampling. The NIOSH Method 5506 sampling was conducted in one of the four ports not being used for the isokinetic sampling. According to EPA Method 1 criteria, this location required 12 sample traverse points, three in each of the four ports. The results of the EPA Method 1 calculations and the locations of the traverse points are presented in Figure 4.6.

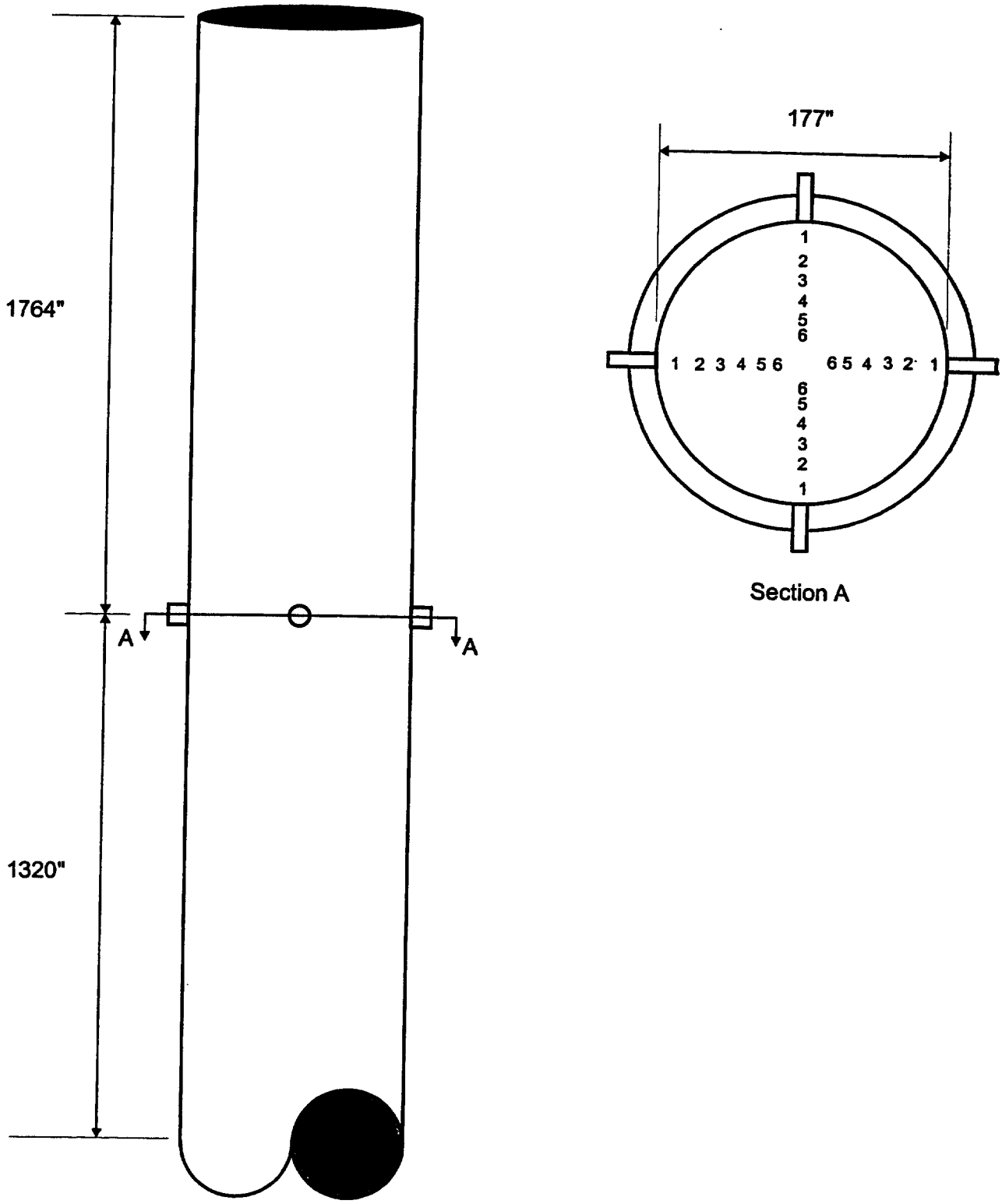

Figure 4.5 Combustion (Underfire) Sampling Location, Bethlehem Steel Corp., Chesterton, Indiana

Circular Stack Method 1 Calculation Results

Date: 11/02/98 Time: 16:24:18

Facility:	Bethlehem Steel, Burns Harbor
Source ID:	UF Stack
Source Name:	Underfire Stack
Date:	11/02/98
Calculated By:	F. Meadows

Input Values

Traverse Point Type:	Sample - M5	
Inside of far wall to outside of nipple:	224 even	(inches)
Nipple Length:	47 even	(inches)
Distance from Upstream Disturbance:	1320 even	(inches)
Distance from Downstream Disturbance:	1764 even	(inches)
Number of ports:	2 ports at 90 degrees	

Calculated Values

Inside Diameter:	177	(inches)
Upstream Duct Diameters:	7.45	
Downstream Duct Diameters:	9.96	
Mininum Traverse Points:	12	

Traverse Point Number	Fraction of Length	Length (inches)	Product of Columns 2 & 3	Nipple Length (inches)	Traverse Point Location Sum of Col. 4 & 5
1	0.044	177 even	7 13/16	47 even	54 13/16
2	0.146	177 even	25 13/16	47 even	72 13/16
3	0.296	177 even	52 3/8	47 even	99 3/8
4	0.704	177 even	124 5/8	47 even	171 5/8
5	0.854	177 even	151 3/16	47 even	198 3/16
6	0.956	177 even	169 3/16	47 even	216 3/16

Figure 4.6 Method 1 Calculation Sheet, Combustion Stack, Bethlehem Steel Corp., Chesterton, Indiana

5.0 SAMPLING AND ANALYTICAL PROCEDURES

Source sampling was performed at the locations described in the preceding section to determine the concentrations and mass emission rates of filterable particulate matter (PM), methylene chloride extractable matter (MCEM), and polycyclic aromatic hydrocarbons (PAHs). In addition, once the MCEM analyses were completed, the MCEM samples were also analyzed to determine 17 trace metals. Three test runs were conducted at each of the locations (the baghouse inlet and outlet testing was conducted simultaneously). The underfire stack test was conducted separately from the baghouse test.

Each test run covered approximately a 10-hour period for the baghouse sampling, one test run per day. Due to the frequency and duration of each coke oven pushing event, isokinetic sampling was conducted as follows:

- During each oven push, a maximum air flow to and from the baghouse is achieved when dampers are opened for a period of approximately 90 seconds, resulting in significantly higher stack gas differential pressures than at idle periods. Maximum air volumes were metered through the sample trains during each oven push. During idle periods, isokinetic sampling was maintained at a much lower sampling rate. The dampers on the baghouse remain open at approximately 10% during idle periods.

Sampling on the underfire stack resulted in test runs of approximately three hours duration. Testing was conducted over two days.

In Table 5.1, the parameters measured, the sampling methods, the number of tests performed, and the duration of each test are summarized. Brief descriptions of the sampling and analysis procedures used are presented below.

5.1 LOCATION OF MEASUREMENT SITES AND SAMPLE/VELOCITY TRAVERSE POINTS

EPA Method 1, "Sample and Velocity Traverses for Stationary Sources," was used to establish velocity and sample traverse point locations. The process ductwork, and the locations of measurement sites and sample traverse points are discussed in Section 4.0 of this document.

TABLE 5.1

SUMMARY OF SAMPLING LOCATIONS, TEST PARAMETERS, SAMPLING METHODS, AND NUMBER AND DURATION OF TESTS, BETHLEHEM STEEL CORPORATION, CHESTERTON, INDIANA

Sampling Location	Test Parameter	Sampling Methods	Number of Tests	Avg. Duration Per Test (min.)
Coke Oven Battery No. 2 Baghouse Inlet	Exhaust gas flow rate	EPA Method 2	3	482
	CO_2 and O_2 content	EPA Method 3B	3	484
	Moisture content	EPA Method 4	3	484
	Particulate/MCEM/metals	EPA Method 315	3	484
	PAHs.	CARB Method 429	3	432
		NIOSH Method 5506	3	424
Coke Oven Battery No. 2 Baghouse Outlet	Exhaust gas flow rate	EPA Method 2	3	442
	CO_2 and O_2 content	EPA Method 3B	3	442
	Moisture content	EPA Method 4	3	442
	Particulate/MCEM/metals	EPA Method 315	3	443
	PAHs	CARB Method 429	3	442
		NIOSH Method 5506	3	414
Underfire Stack	Exhaust gas flow rate	EPA Method 2	3	180
	CO_2 and O_2 content	EPA Method 3B	3	180
	Moisture content	EPA Method 4	3	180
	Particulate/MCEM/metals	EPA Method 315	3	182
	PAHs	CARB Method 429	3	180
		NIOSH Method 5506	3	165

5.2 DETERMINATION OF STACK GAS VOLUMETRIC FLOW RATE

EPA Method 2, "Determination of Stack Gas Velocity and Volumetric Flow Rate (Type S Pitot Tube)," was used to determine exhaust gas velocity. A Type S Pitot tube, constructed according to Method 2 criteria and having an assigned coefficient of 0.84, is connected to an inclined-vertical manometer. The pitot tube was inserted into the duct and the velocity pressure (delta p) was recorded at each traverse point. The effluent gas temperature was also recorded at each traverse point using a Type K thermocouple. The average exhaust gas velocity was calculated from the average square roots of the velocity pressure, average exhaust gas temperature, exhaust gas molecular weight, and absolute stack pressure. The baghouse sampling required using time weighted averages of velocity pressure, exhaust gas temperatures, and meter temperatures to calculate volumetric flow rates. The volumetric flow rate is the product of velocity and the stack cross-sectional area of the duct at the sampling location.

5.3 DETERMINATION OF STACK GAS EMISSION RATE CORRECTION FACTORS, DRY MOLECULAR WEIGHT, AND EXCESS AIR

EPA Method 3B, "Gas Analysis for the Determination of Emission Rate Correction Factor or Excess Air," was used to determine stack gas emission rate correction factors and molecular weight. Bag samples were collected and analyzed for each measurement run using an Orsat® combustion gas analyzer which read ± 0.1% concentrations of carbon dioxide and oxygen. One integrated bag sample was collected per each 60 minutes of sampling time at the baghouse inlet and outlet, as well as the underfire stack.

5.4 DETERMINATION OF STACK GAS MOISTURE CONTENT

EPA Method 4, "Determination of Moisture Content in Stack Gases," was used to determine the flue gas moisture content. EPA Method 4 was performed in conjunction with each EPA Method 315 and CARB Method 429 test run. Integrated, multi-point, isokinetic sampling was performed. Condensed moisture was determined by recording pre-test and post-test weights of the impingers, reagents, and silica gel. XAD®-2 adsorbent traps were also pre- and post-test weighed and included in the CARB Method 429 moisture determination.

5.5 DETERMINATION OF PARTICULATE MATTER/METHYLENE CHLORIDE EXTRACTABLE MATTER/METALS

EPA Method 315, "Determination of Particulate and Methylene Chloride Extractable Matter (MCEM) from Selected Sources at Primary Aluminum Production Facilities" was used to determine PM, MCEM, and metals.

This method is applicable for the simultaneous determination of PM and MCEM. PM and MCEM were withdrawn isokinetically from the source. PM was collected in the probe and

on a tared glass fiber filter at 248 ± 25°F. A schematic of the MCEM sample train is shown in Figure 5.1. The sampling train consisted of a glass nozzle, a heated glass lined probe, a heated tared quartz fiber filter, two impingers each containing 100 milliliters of Type II distilled, de-ionized water, an empty impinger, and an impinger containing approximately 250 grams of indicating silica gel. The glass nozzle was joined to the probe using a Teflon®-coated stainless steel union and Teflon® or graphite ferrules. A Teflon® liner was used at the baghouse inlet due to the overall length (greater than 10') of the probe assembly and poor port access. Due to particulate loading, filters were replaced at the baghouse inlet at port changes. At the baghouse inlet sampling location, an unheated flexible Teflon® sample line was used between the filter exit and impinger inlet. This modification was necessitated by poor access to the sample ports. ERG submitted tared, quartz fiber filters to PES for sampling, which were returned after the test program for PM and MCEM analysis. The PM mass was determined gravimetrically after removal of combined water. MCEM was then determined by performing a methylene chloride extraction of the sample train fractions and determining the residue gravimetrically after evaporating the solvents.

Following completion of the MCEM analyses by ERG, the PM and MCEM samples were submitted to FAL where they were digested and analyzed for the presence of 17 trace metals using three different analytical techniques. This analysis provided an approximation of the trace metals present in the stack gases. The target metals include antimony (Sb), arsenic (As), barium (Ba), beryllium (Be), cadmium (Cd), chromium (Cr), cobalt (Co), copper (Cu), lead (Pb), manganese (Mn), mercury (Hg), nickel (Ni), phosphorous (P), selenium (Se), silver (Ag), thallium (Tl), and zinc (Zn). Cadmium, manganese, lead (inlet), and zinc were determined by Direct Aspiration Flame Atomic Absorption Spectrophotometry (FLAAS). Antimony, arsenic, beryllium, lead (other sources and blanks), nickel, selenium, silver, and thallium were determined by Graphite Furnace Atomic Absorption Spectrophotometry (GFAAS). Barium, chromium, cobalt, copper and phosphorus were determined by Inductively Coupled Plasma - Optical Emission (ICP). Mercury was determined by Cold Vapor Atomic Adsorption Spectrophotometry (CVAAS).

Baghouse dust samples were collected and composited in sample containers for each test run. Composites were collected at the beginning, middle, and end of the individual sample runs. FAL analyzed the three samples for the same number and type of analytes as for the EPA Method 315 samples with the exception of cobalt which was inadvertantly omitted from the analyte list provided to the analytical laboratory. Samples were prepared by nitric acid digestion, followed by analysis by Direct Aspiration Flame Atomic Absorption Spectrophotometry (FLAAS), Graphite Furnace Atomic Absorption Spectrophotometry (GFAAS), Inductively Coupled Plasma - Optical Emission (ICP) and Cold Vapor Atomic Absorption Spectrophotometry (CVAAS).

5.6 POLYCYCLIC AROMATIC HYDROCARBONS

CARB Method 429, "Determination of Polycyclic Aromatic Hydrocarbon (PAH) Emissions from Stationary Sources," was used to determine PAHs. This method is applicable for

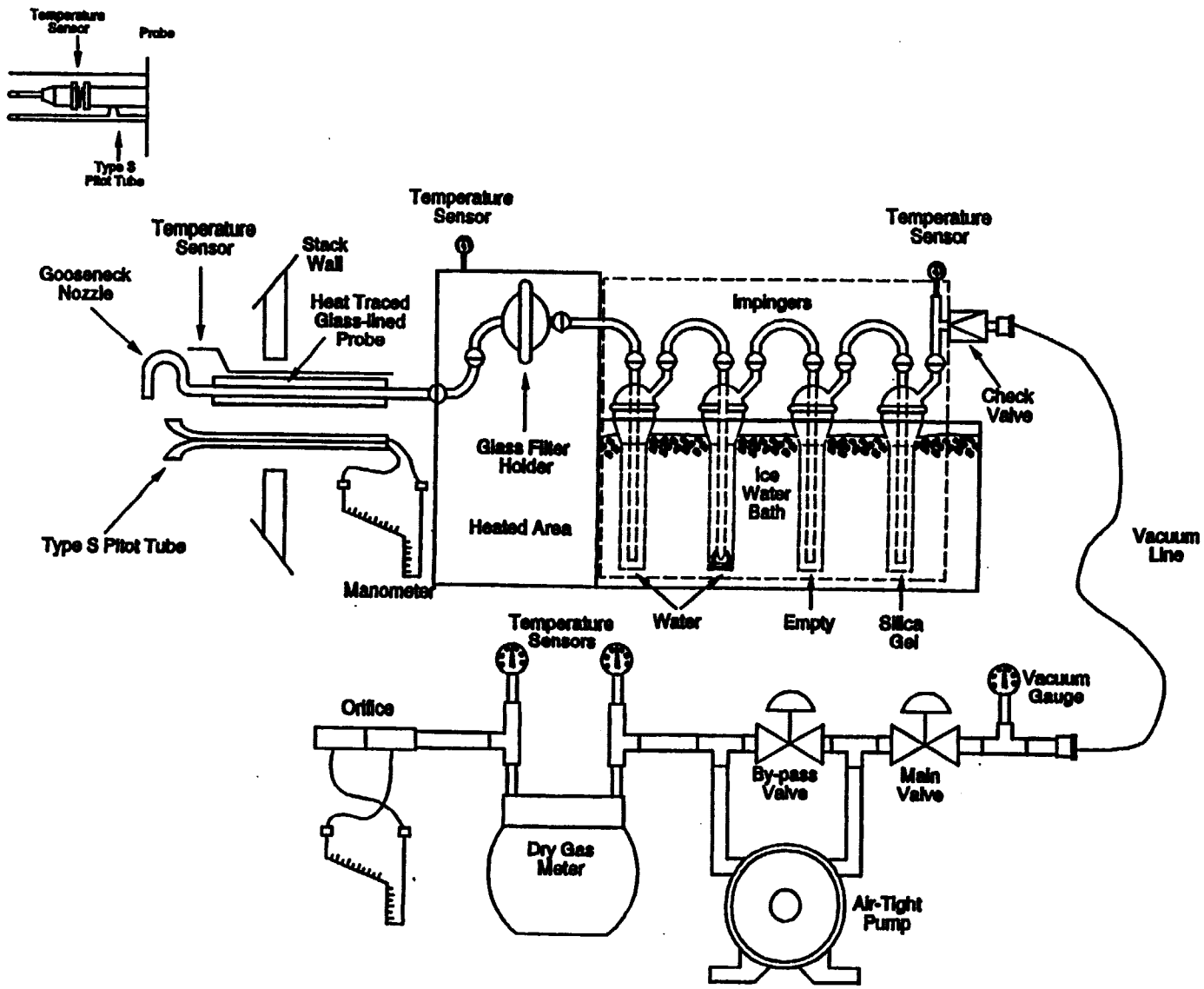

Figure 5.1 Sampling Train Schematic for EPA Method 315

the determination of 19 PAHs. Quanterra submitted solvent extracted XAD-2® resin sorbent cartridges and untared Teflon® filters for sampling purposes. The sampling train consisted of a glass nozzle, a heated glass lined or Teflon® probe, a heated precleaned, untared Teflon® mat filter, a water-cooled coil condenser, and an adsorbent trap containing approximately 40 grams of XAD-2® adsorbent resin. Due to particulate loading and the length of sampling time, filters were replaced at the baghouse inlet at port changes. The first impinger was empty, the next two each contained 100 milliliters of 3 mM sodium bicarbonate and 2.4 mM sodium carbonate. The next impinger was empty, followed by the last impinger which contained approximately 250 grams of indicating silica gel. At the baghouse inlet sampling location, an unheated flexible Teflon® sample line was used between the filter exit and condenser inlet. This modification was necessitated by poor access to the sample ports. Particulate and gaseous phase PAHs were extracted isokinetically from the source and collected in the probe and filter; XAD®-2 resin; and impinger portions of the sample train. A schematic of CARB Method 429 is shown in Figure 5.2. Figure 5.3 is a schematic of the CARB Method 429 sample recovery process. Analysis was accomplished by isotope dilution mass spectrometry combined with high resolution gas chromatography. Figure 5.4 is a schematic of the CARB Method 429 analytical process.

NIOSH Method 5506 was also used to scan for gaseous phase PAHs at the baghouse inlet and outlet, and underfire stack. The samples were collected at each location using an in-stack filter followed by a series of three out-of-stack XAD-2® sorbent tubes. Sampling was performed continuously throughout the pushing operations and during idle periods at a sample rate of 1.5-2 liters per minute. The samples were analyzed using high performance liquid chromatography and fluorescence/UV detection. The NIOSH 5506 method was used to scan for PAHs in the event CARB Method 429 results were below analytical detection limits. The NIOSH results were not intended to be compared to CARB 429 results.

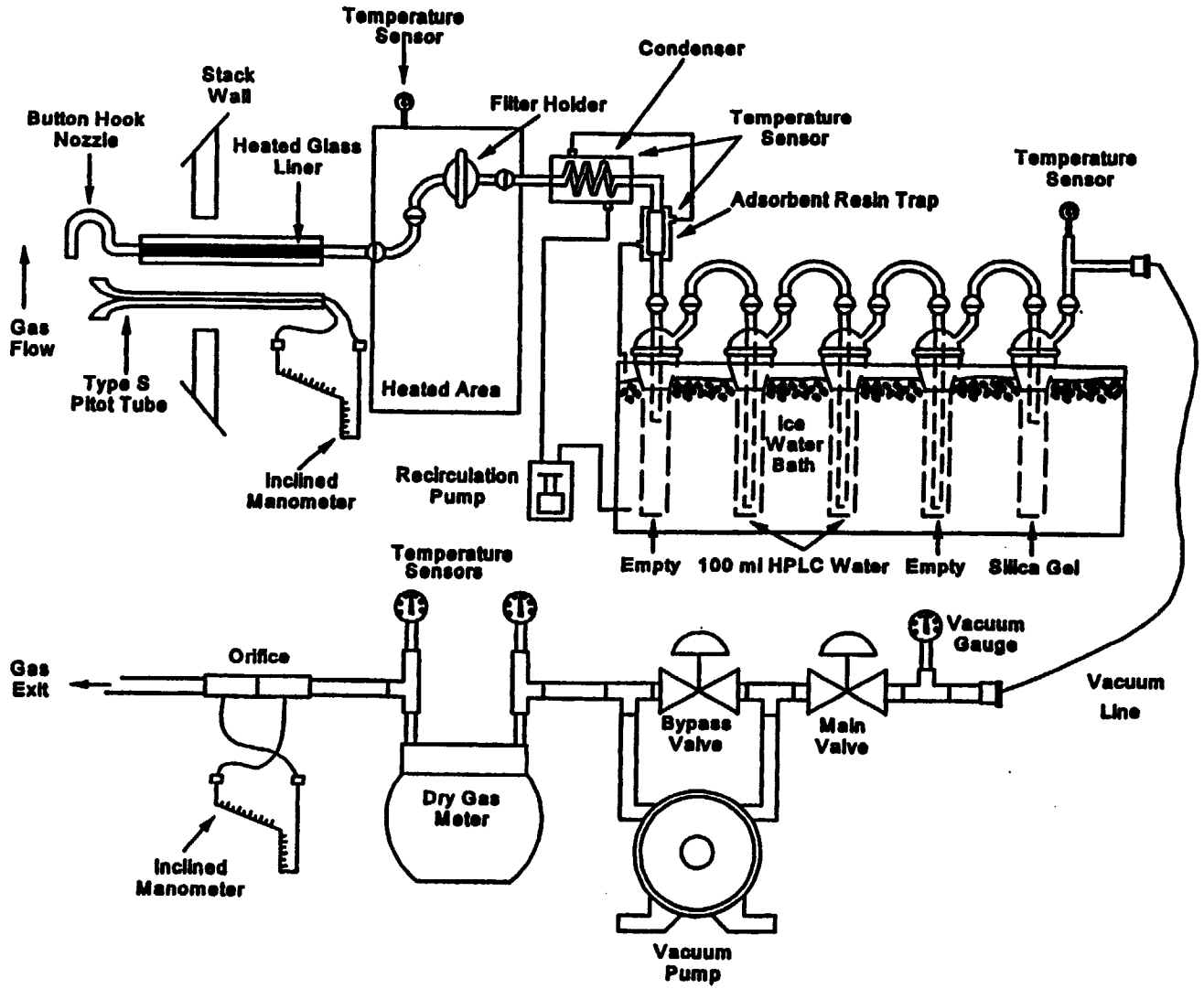

Figure 5.2 Sampling Train Schematic for CARB Method 429

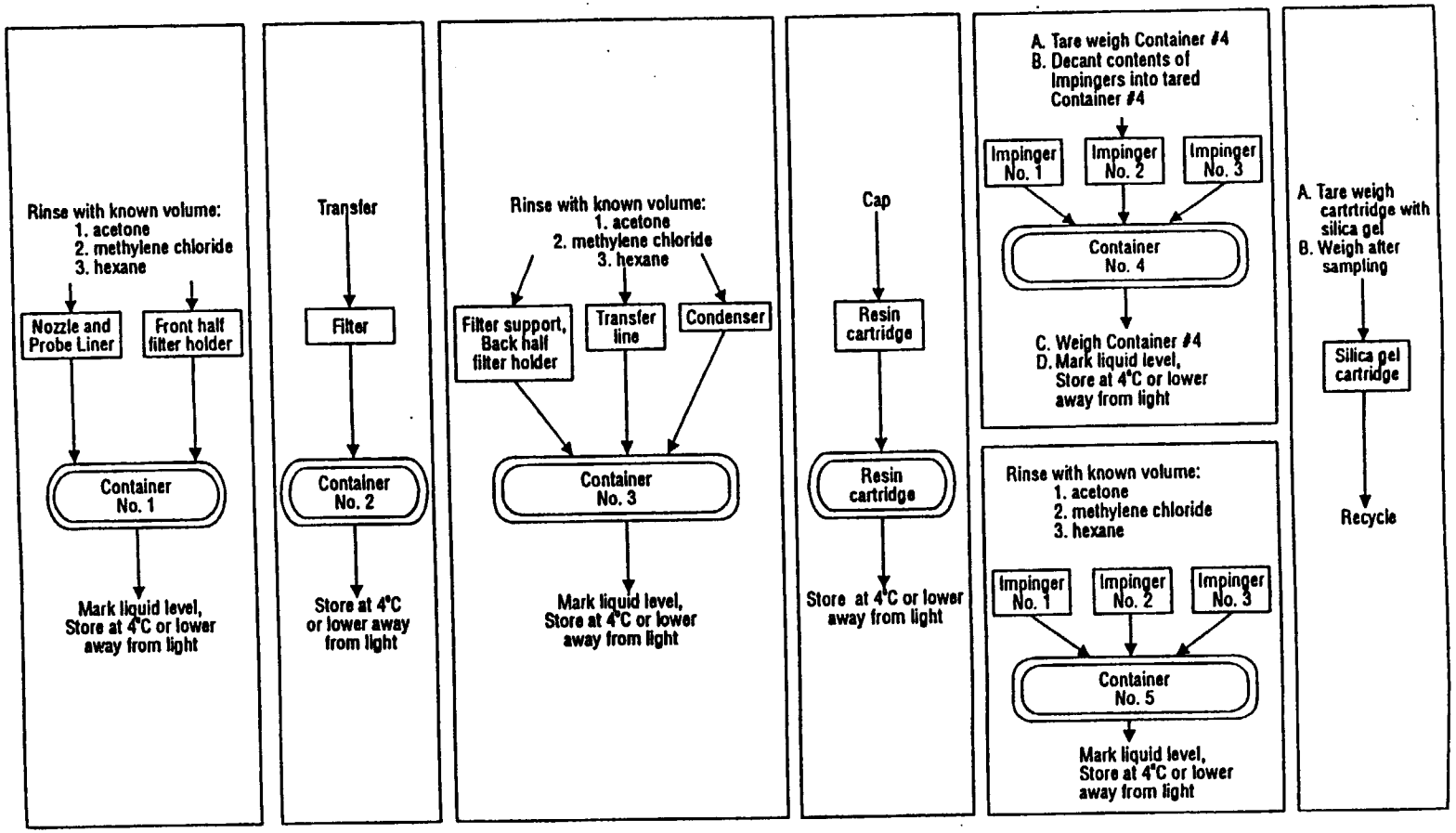

Figure 5.3 CARB Method 429 Sample Recovery Schematic

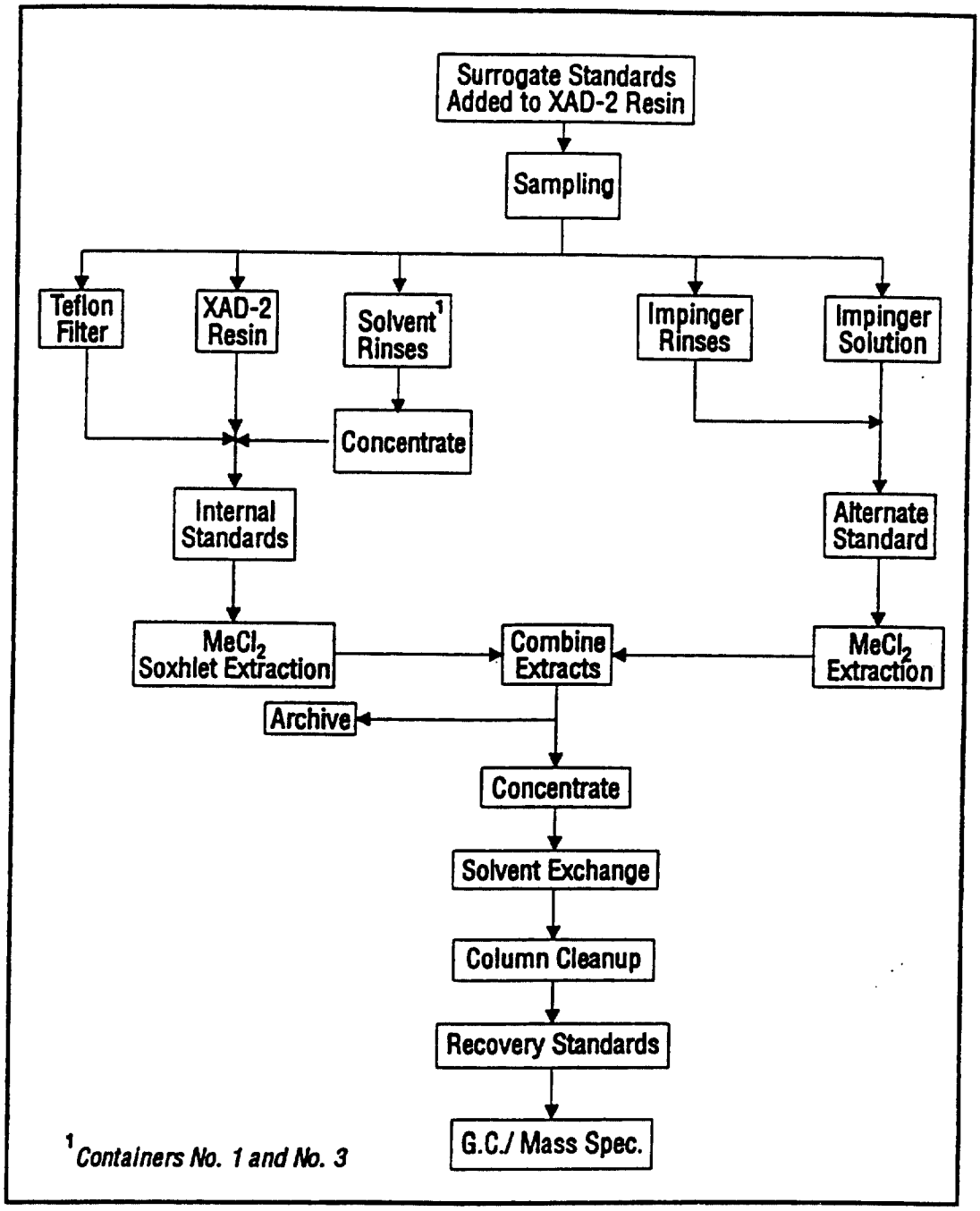

Figure 5.4 CARB Method 429 Analytical Schematic

6.0 QUALITY ASSURANCE/QUALITY CONTROL PROCEDURES AND RESULTS

This section describes the specific QA/QC procedures employed by PES in performing this series of tests. The procedures contained in the "Quality Assurance Handbook for Air Pollution Measurement Systems, Volume III, Stationary Source Specific Methods," EPA/600/R-94/038c, and in the reference test methods served as the basis for performance for all testing and related work activities in this project.

6.1 CALIBRATION OF APPARATUS

The preparation and calibration of source sampling equipment is essential in maintaining data quality. Brief descriptions of the calibration procedures used by PES follow.

6.1.1 Barometers

PES used aneroid barometers which are calibrated against a station pressure value reported by a nearby National Weather Service Station corrected for elevation.

6.1.2 Temperature Sensors

Bimetallic dial thermometers and Type K thermocouples were calibrated using the procedure described in Section 3.4.2 of the Quality Assurance Handbook, Volume III, 1994. Each temperature sensor was calibrated over the expected range of use against an ASTM 3C or 3F thermometer. Table 6.1 summarizes the type of calibrations performed, the acceptable levels of variance, and the results. Digital thermometers were calibrated using a thermocouple simulator having a range of 0-2400°F.

6.1.3 Pitot Tubes

Type S pitot tubes constructed to EPA Method 2 specifications were used. Pitot tubes meeting these specifications are assigned a baseline coefficient of 0.84 and need not be calibrated. The dimensional criteria and results for each pitot tube used are summarized in Table 6.2.

TABLE 6.1

SUMMARY OF TEMPERATURE SENSOR CALIBRATION DATA

Temp. Sensor I.D.	Usage	Temperature, °F		Temperature Difference, %	Calibration Tolerances
		Reference	Sensor		
5B	Stack Gas	72	72	0.0	<±1.5%
		44	44	0.0	<±1.5%
		204	204	0.0	<±1.5%
		400	400	0.0	<±1.5%
T5B	Stack Gas	74	74	0.0	<±1.5%
		46	46	0.0	<±1.5%
		200	200	0.0	<±1.5%
		318	318	0.0	<±1.5%
7A	Stack Gas	74	74	0.0	<±1.5%
		36	36	0.0	<±1.5%
		198	199	0.2	<±1.5%
		333	332	0.1	<±1.5%
7D	Stack Gas	74	74	0.0	<±1.5%
		40	41	0.2	<±1.5%
		206	205	0.2	<±1.5%
		340	341	0.1	<±1.5%
8C	Stack Gas	74	74	0.0	<±1.5%
		38	38	0.0	<±1.5%
		199	199	0.0	<±1.5%
		339	339	0.0	<±1.5%
RP20	Stack Gas	72	69	0.7	<±1.5%
		32	32	0.0	<±1.5%
		210	208	0.3	<±1.5%
		--	--	--	--
RP21	Stack Gas	74	75	0.2	<±1.5%
		32	32	0.0	<±1.5%
		208	209	0.2	<±1.5%
		--	--	--	--
MB-1	Meter Box Inlet	75	75	0.0	<±1.5%
		38	38	0.0	<±1.5%
		190	190	0.0	<±1.5%
	Meter Box Outlet	75	74	0.2	<±1.5%
		37	37	0.0	<±1.5%
		190	190	0.0	<±1.5%
MB-2	Meter Box Inlet	70	69	0.2	<±1.5%
		34	34	0.0	<±1.5%
		160	159	0.2	<±1.5%
	Meter Box Outlet	70	70	0.0	<±1.5%
		34	33	0.2	<±1.5%
		160	160	0.0	<±1.5%

TABLE 6.1 (concluded)

Temp. Sensor I.D.	Usage	Temperature, °F		Temperature Difference, %	Calibration Tolerances
		Reference	Sensor		
MB-3	Meter Box Inlet	74	74	0.0	<±1.5%
		30	31	0.2	<±1.5%
		190	190	0.0	<±1.5%
	Meter Box Outlet	73	72	0.2	<±1.5%
		32	31	0.2	<±1.5%
		190	190	0.0	<±1.5%
MB-4	Meter Box Inlet	74	74	0.0	<±1.5%
		30	30	0.0	<±1.5%
		190	191	0.2	<±1.5%
	Meter Box Outlet	73	72	0.2	<±1.5%
		32	30	0.4	<±1.5%
		190	191	0.2	<±1.5%
MB-5	Meter Box Inlet	70	69	0.2	<±1.5%
		34	34	0.0	<±1.5%
		160	159	0.2	<±1.5%
	Meter Box Outlet	70	71	0.2	<±1.5%
		34	33	0.2	<±1.5%
		160	161	0.2	<±1.5%
MB-6	Meter Box Inlet	68	67	0.2	<±1.5%
		33	34	0.2	<±1.5%
		155	155	0.0	<±1.5%
	Meter Box Outlet	68	68	0.0	<±1.5%
		33	34	0.2	<±1.5%
		155	156	0.2	<±1.5%

TABLE 6.2

SUMMARY OF PITOT TUBE DIMENSIONAL DATA

Measurement	Criteria	Results							
		Pitot Tube Identification							
		5B	5C	5E	7A	7D	8C	RP20	RP21
$\alpha 1$	<10°	3	0	1	0	3	3	0	0
$\alpha 2$	<10°	3	1	1	1	3	0	1	1
$\beta 1$	<5°	1	1	1	3	1	1	1	1
$\beta 2$	<5°	3	1	3	2	1	1	0	0
γ	-	3	1	0	4	1	1	1	1
θ	-	1	1	1	1	0	0	0	0
A	-	1.124	0.948	1.122	0.996	0.931	0.939	1.023	1.023
Z	≤ 0.125 in.	0.059	0.017	0.00	0.069	0.016	0.016	0.018	0.018
W	≤ 0.03125 in.	0.020	0.017	0.020	0.017	0	0	0	0
D_t	0.1875" ≤ D_t ≤ 0.375"	0.375	0.375	0.375	0.375	0.375	0.375	0.375	0.375
$A/2/D_t$	1.05 D_t ≤ A ≤ 1.50 D_t	1.50	1.26	1.50	1.33	1.24	1.25	1.36	1.36
	Acceptable	Yes	Yes	Yes	Yes	Yes	Yes	Yes	Yes
	Assigned Coefficient	0.84	0.84	0.84	0.84	0.84	0.84	0.84	0.84

6.1.4 Differential Pressure Gauges

PES used Dwyer inclined/vertical manometers to measure differential pressures. The differential pressures measurements included velocity pressure, static pressure, and meter orifice pressure. Manometers are selected with sufficient sensitivity to accurately measure pressures over the entire range of expected values. Manometers are primary standards and require no calibration.

6.1.5 Dry Gas Meters and Orifices

The EPA Method 315 and CARB Method 429 dry gas meters and orifices were calibrated in accordance with Sections 5.3.1 and 5.3.2 of EPA Method 5. This procedure involves direct comparison of the dry gas meter to a reference dry test meter. The reference dry test meter is calibrated annually using a wet test meter. Before its initial use in the field, the metering system was calibrated over the entire range of operation as specified in EPA Method 5. After field use, the metering system was calibrated at a single intermediate setting based on the previous field test. Acceptable tolerances for the initial and final dry gas meter factors and orifice calibration factors are ± 0.05 and ± 0.20 from average, respectively. The calibration results for the gas meters and orifices used in this test program are summarized in Table 6.3.

6.2 ON-SITE MEASUREMENTS

The on-site QA/QC activities include:

6.2.1 Measurement Sites

Prior to sampling, the stack and inlet duct were checked dimensionally to determine measurement site locations, location of velocity and sample test ports, inside stack/duct dimensions, and sample traverse point locations. Inside stack/duct dimensions were checked through both traverse axis to ensure uniformity of the stack/duct inside diameter. The inside stack/duct dimensions, wall thickness, and sample port depths were measured to the nearest 1/8 inch.

6.2.2 Velocity Measurements

All velocity measurement apparatus were assembled, leveled, zeroed, and leak-checked prior to use and at the end of each determination. The static pressure was determined at a single point near the center of the stack or duct cross-section.

TABLE 6.3

SUMMARY OF DRY GAS METER AND ORIFICE CALIBRATION DATA

Meter No.	Gamma				Orifice Coefficient		
	Pre-test	Post-test	% Diff.	EPA Criteria	Average	Range	EPA Criteria
MB-1	1.012	1.011	0.1	± 5%	1.954	1.754-2.154	1.954 ± 0.20
MB-2	1.002	0.999	0.3	± 5%	1.797	1.597-1.997	1.797 ± 0.20
MB-3	1.004	0.990	1.4	± 5%	1.784	1.584-1.984	1.784 ± 0.20
MB-4	0.979	0.992	1.4	± 5%	1.872	1.672-2.072	1.872 ± 0.20
MB-5	0.981	0.994	1.3	± 5%	1.770	1.570-1.970	1.770 ± 0.20
MB-6	1.005	1.005	0.0	± 5%	1.778	1.578-1.978	1.778 ± 0.20

6.2.3 Flue Gas Composition

Integrated, multi-point, flue gas samples were collected in Tedlar® gas bags from the baghouse inlet and outlet and underfire stack. Prior to use the bags were leak checked and purged with nitrogen to ensure cleanliness. Prior to and after completion of each sampling run, the entire sampling system was leak checked from the tip of the probe. The bag samples were analyzed on-site using an Orsat® analyzer within four hours after sample collection, in accordance with EPA Method 3B. Prior to use the Orsat® analyzer was assembled and replenished with fresh reagents and leak checked using the manufacturer's procedures.

6.2.4 Moisture

The EPA Method 315 and CARB Method 429 sampling trains were used to determine the flue gas moisture content. During sampling, the exit gas of the last impinger was maintained below 68°F to ensure complete condensation of flue gas water vapor. The total moisture was determined gravimetrically using an electronic platform balance with 0.1 gram sensitivity. The XAD®-2 adsorbent modules from the CARB Method 429 sampling trains were also weighed and their weights included in the moisture catch.

6.2.5 EPA Method 315 and CARB Method 429

The field sampling QA/QC for the EPA Method 315 and CARB Method 429 sampling trains were similar. Table 6.4 summarizes the critical measurements made and EPA's critical acceptability criteria. All pre- and post-test sample train leak checks met the acceptance criteria. Most of the isokinetic sampling rates deviated by no more than ±10 percent thereby meeting the method criteria of 90-110%. There were three sample runs slightly outside of this range, two at the baghouse inlet and one at the baghouse outlet. These are not believed to have had an impact on sample results.

The EPA Method 315 and CARB Method 429 field blanks were collected near each of the sampling locations to check for any sample contamination at the sites. Sample trains were assembled and pre- and post-test leak checks were conducted. The sample trains were recovered in the same manner as the actual sample runs. Each field blank train was subjected to a minimum of one leak check in the laboratory (filter holder assembly) and a minimum of three at the sampling site.

An acetone and methylene chloride blank and tared quartz fiber filter were taken as control samples for the particulate/MCEM analysis and subsequent analysis for metals. Blanks were taken of the impinger and recovery reagents. CARB 429 control samples consisted of acetone, methylene chloride and hexane, as well as an untared Teflon® filter and XAD®-2 resin trap.

TABLE 6.4

SUMMARY OF EPA METHOD 315 AND CARB METHOD 429 FIELD SAMPLING QA/QC DATA

Date	Site	Run No.	Pre-Test Leak Rate acfm	Post-Test Leak Rate acfm	EPA Criteria acfm	Percent Isokinetic	EPA Criteria
08/11/98	Baghouse Inlet	B-I-315-1 B-I-429-1	0.010 @ 15" Hg 0.011 @ 15" Hg	0.001 @ 5" Hg 0.012 @ 15" Hg	≤0.02 ≤0.02	118.1 90.5	90-110% 90-110%
	Baghouse Outlet	B-O-315-1 B-O-429-1	0.003 @ 15" Hg 0.008 @ 15" Hg	0.003 @ 8" Hg 0.012 @ 7" Hg	≤0.02 ≤0.02	99.6 112.4	90-110% 90-110%
08/12/98	Baghouse Inlet	B-I-315-2 B-I-429-2	0.007 @ 15" Hg 0.008 @ 13" Hg	0.015 @ 5" Hg 0.005 @ 10" Hg	≤0.02 ≤0.02	105.2 94.1	90-110% 90-110%
	Baghouse Outlet	B-O-315-2 B-O-429-2	0.007 @ 16" Hg 0.006 @ 15" Hg	0.003 @ 10" Hg 0.001 @ 8" Hg	≤0.02 ≤0.02	98.3 95.9	90-110% 90-110%
08/13/98	Baghouse Inlet	B-I-315-3 B-I-429-3	0.005 @ 15" Hg 0.002 @ 15" Hg	0.006 @ 4" Hg 0.006 @ 6" Hg	≤0.02 ≤0.02	110.8 91.8	90-110% 90-110%
	Baghouse Outlet	B-O-315-3 B-O-429-3	0.003 @ 15" Hg 0.004 @ 15" Hg	0.004 @ 8" Hg 0.004 @ 11" Hg	≤0.02 ≤0.02	96.7 100.0	90-110% 90-110%
08/14/98	Underfire Stack	B-U-315-1 B-U-315-2 B-U-429-1 B-U-429-2	0.002 @ 15" Hg 0.005 @ 15" Hg 0.006 @ 15" Hg 0.001 @ 17" Hg	0.001 @ 4" Hg 0.002 @ 3" Hg 0.006 @ 18" Hg 0.006 @ 14" Hg	≤0.02 ≤0.02 ≤0.02 ≤0.02	106.0 107.5 96.0 100.8	90-110% 90-110% 90-110% 90-110%
08/15/98		B-U-315-3 B-U-429-3	0.003 @ 15" Hg 0.002 @ 15" Hg	0.002 @ 5" Hg 0.002 @ 7" Hg	≤0.02 ≤0.02	103.5 99.1	90-110% 90-110%

6.3 LABORATORY ANALYSES

The EPA Method 315 and CARB Method 315 samples were hand delivered to PES' contract laboratories for analyses. Upon delivery, the samples were transferred to the laboratory sample custodian, where they were unpacked and inspected for damage, status, and chain-of-custody documentation. All samples were received by the laboratories in good condition. The PES Project Manager and Field Team Leader then contacted the laboratory analysts and discussed the samples and the analyses required.

PES also conducted a follow-up visit to three of the four laboratories to review procedures for sample handling and tracking, sample preparation and analyses, data reporting, and quality control. Visits were made to ERG, FAL and Quanterra. A visit was not made to LabCorp. The results of these visits are summarized in Appendix E. It is the opinion of PES that the analytical laboratories selected to support this assignment were well staffed, used state-of-the-art equipment, followed rigorous QA/QC procedures, and submitted accurate reports of the anlaytical results.

6.3.1 EPA Method 315 Filterable Particulate and Methylene Chloride Extractable Matter

Filterable PM and MCEM analysis consisted of front half acetone and methylene chloride sample rinses and quartz fiber filters. Back half MCEM analysis consisted of acetone and methylene chloride rinses of impingers containing distilled, deionized water. Prior to the field testing program, the filters were tared in the ERG laboratory, stored in glass petri dishes and sealed with Teflon® tape. Upon receipt of the samples in the ERG laboratory, the acetone rinses were placed in tared beakers and evaporated to dryness at room temperature. The filters and beakers were dessicated and weighed to a constant weight. Table 6.5 summarizes the EPA Method 315 lab blank QC data results. Table 6.6 summarizes the EPA Method 315 field blank QC data results. At the baghouse inlet and outlet, the MCEM in the field blanks was about 22% of the MCEM collected in the actual samples. At the underfire stack, the MCEM in the field blank was less than 1% of the MCEM collected in the actual samples. The field blank values represent MCEM contained in the ambient air at the test sites. Field blanks are not required by EPA Method 315 and, therefore, there is no provision in the method for corrections to the MCEM in the actual samples.

The front half samples were re-dissolved in methylene chloride, filtered, and the filtered liquid dessicated to dryness for MCEM determination. The backhalf impinger fraction was extracted with several portions of methylene chloride and placed in a beaker. The solvent is evaporated and dessicated to dryness for weighing. Criteria of acceptance of gravimetric analysis is ± 0.5 milligrams between two weights, taken at least six hours apart.

6.3.2 EPA Method 29 - Multiple Metals

FAL analyzed the filterable particulate catch of the quartz filters and also the particulate and extracted organic matter residue of the EPA Method 315 samples. A total of 17 metals were analyzed for. Analysis followed EPA Method 29 analytical procedures. A total of 13 samples were analyzed, nine were stack gas samples, three were field blanks and one reagent blank. Cadmium, manganese, lead (inlet samples) and zinc were analyzed by Direct Aspiration Flame Atomic Absorption Spectrophotometry (FLAA). Antimony, arsenic, beryllium, lead, nickel, selenium, silver, and thallium were determined by Graphite Furnace Atomic Absorption Spectrophotometry (GFAA). Barium, chromium, cobalt, copper, and phosphorus were

TABLE 6.5

SUMMARY OF EPA METHOD 315 ANALYTICAL QC DATA
LAB BLANK ANALYSIS

Sample Fraction	Particulate, grams	MCEM, grams
Quartz Filter	0.0032	0.0000
Acetone	0.0002	--
Methylene Chloride	0.0000	--
Distilled Water	0.0001	--

TABLE 6.6

SUMMARY OF EPA METHOD 315 ANALYTICAL QC DATA
FIELD BLANK ANALYSIS

Sample Fraction	Baghouse Inlet B-I-315-FB, grams	Baghouse Outlet B-O-315-FB, grams	Underfire Stack B-U-315-FB, grams
Filter - PM MCEM	0.0017 0.0003	0.0011 0.0002	0.0058 0.0000
Acetone FHR, PM	0.0022	0.0014	0.0022
Methylene Chloride FHR, MCEM	0.0001	0.0009	0.0003
Acetone BHR, MCEM	0.0000	0.0000	0.0000
Methylene Chloride BHR, MCEM	0.0001	0.0000	0.0000
H_2O Impinger Rinses, MCEM	0.0016	0.0001	0.0000

determined by Inductively Coupled Plasma - Optical Emission (ICP). Specific QA and QC activities for the analyses consisted of a reagent blank (quartz filter and pan) and spike recoveries of 16 of the analytes. Recoveries ranged from 83 percent to 106 percent. Duplicate analysis on several metals were within the acceptable limit of 20%. Table 6.7 summarizes the EPA Method 29 analytical recovery and duplicate analyses QC results.

6.3.3 CARB Method 429

PAHs were analyzed following the procedures of CARB Method 429. All fractions of the sampling train were combined for a single extract which was analyzed by high resolution gas chromatography/high resolution mass spectrophotometry (HRGG/HRMS). Nine stack gas samples were analyzed, along with three field blanks, a method blank and lab blank. The XAD® resin cartridges were spiked with surrogate standards prior to use for field sampling to demonstrate overall sampling and analytical recovery efficiency. After samples were received in the laboratory and prior to sample extraction, a laboratory control sample was prepared with two levels of surrogate standards to monitor the precision and accuracy of the analytical process independently of sample matrix effects. Table 6.8 summarizes the CARB Method 429 field blank QC results. Table 6.9 summarizes the CARB Method 429 lab control sample QC results. Table 6.10 summarizes the CARB Method 429 surrogate standards recoveries for 17 analytes for all nine field sample runs.

TABLE 6.7

SUMMARY OF EPA METHOD 29 ANALYTICAL QC DATA
LAB CONTROL SAMPLE (LCS) RECOVERY AND DUPLICATE ANALYSIS

Analyte	Spike Amount, μg/l	LCS Recovery, %	Recovery Limit, %	Duplicate RPD, %	RPD Limit, %
Antimony	100	94	70-130	--	--
Arsenic	100	85	70-130	--	--
Barium	1000	96	70-130	--	--
Beryllium	5.0	91	70-130	--	--
Cadmium	400	97	70-130	0.0	± 20%
Chromium	2000	85	70-130	--	--
Cobalt	1000	88	70-130	--	--
Copper	2000	89	70-130	--	--
Manganese	400	95	70-130	0.0	± 20%
Mercury	5.0	95	70-130	--	--
Lead	2000/100	98/98	70-130	2.6	± 20%
Nickel	100	86	70-130	--	--
Phosphorus	2000	83	70-130	--	--
Selenium	50	103	70-130	--	--
Silver	10	106	70-130	--	--
Thallium	50	88	70-130	--	--
Zinc	400	104	70-130	9.8	± 20%

TABLE 6.8

SUMMARY OF CARB METHOD 429 ANALYTICAL QC DATA
FIELD BLANK RESULTS

Analyte	Baghouse Inlet µg/sample	Baghouse Outlet µg/sample	Underfire Stack µg/sample
Naphthalene	1.100	0.620	2.900
2-Methylnaphthalene	0.089	0.076	0.840
Acenaphthylene	0.027	ND	0.280
Acenaphthene	0.014	0.041	0.097
Fluorene	0.022	0.022	0.140
Phenanthrene	0.160	0.130	0.370
Anthracene	ND	ND	0.025
Fluoranthene	0.078	0.044	0.097
Pyrene	0.029	0.054	0.058
Benzo(a) anthracene	0.013	0.011	0.018
Chrysene	0.023	0.017	0.030
Benzo(b) fluoranthene	0.018	0.015	0.021
Benzo(k) fluoranthene	0.015	0.012	0.015
Benzo(e) pyrene	0.013	0.011	0.012
Benzo(a) pyrene	0.014	0.012	0.013
Perylene	ND	ND	ND
Indeno(1,2,3-cd) pyrene	0.015	0.012	0.013
Dibenz(a,h) anthracene	ND	ND	ND
Benzo(g,h,i) perylene	0.041	0.037	0.032

TABLE 6.9

SUMMARY OF CARB METHOD 429 ANALYTICAL QC DATA
LAB CONTROL SAMPLE (LCS)

Analyte	Spike Amounts, μg/sample	LCS Recovery, %	Recovery Limits, %
Naphthalene	100	107	50-150
2-Methylnapthalene	100	102	50-150
Acenaphthylene	100	114	50-150
Acenaphthene	100	112	50-150
Fluorene	100	117	50-150
Phenanthrene	100	110	50-150
Anthracene	100	113	50-150
Fluoranthene	100	115	50-150
Pyrene	100	113	50-150
Benzo(a)anthracene	100	103	50-150
Chrysene	100	102	50-150
Benzo(b)fluoranthene	100	108	50-150
Benzo(k)fluoranthene	100	111	50-150
Benzo(e)pyrene	100	124	50-150
Benzo(a)pyrene	100	104	50-150
Perylene	100	87	50-150
Indeno(1,2,3-cd)pyrene	100	99	50-150
Dibenz(a,h)anthracene	100	111	50-150
Benzo(g,h,i)perylene	100	104	50-150
Naphthalene-d8	50	67	50-150
Acenaphthylene-d8	50	61	50-150
Acenaphthene-d10	50	66	50-150

TABLE 6.9 (Concluded)

Analyte	Spike Amounts, μg/sample	LCS Recovery, %	Recovery Limits, %
Fluorene-d10	50	62	50-150
Phenanthrene-d10	50	65	50-150
Fluoranthene-d10	50	76	50-150
Pyrene-d10	50	79	50-150
Benzo(a)anthracene-d12	50	92	50-150
Chrysene-d12	50	102	50-150
Benzo(b)fluoranthene-d12	50	95	50-150
Benzo(k) fluoranthene-d12	50	91	50-150
Benzo(a)pyrene-d12	50	83	50-150
Perylene-d12	50	83	50-150
Indeno(123-cd)pyrene-d12	50	96	50-150
Dibenz(a,h) anthracene-d14	50	91	50-150
Benzo(g,h,i) perylene-d12	50	97	50-150

TABLE 6.10

SUMMARY OF CARB METHOD 429 ANALYTICAL QC DATA
SURROGATE STANDARD RECOVERIES

Analyte	B-I-429-1, %	B-I-429-2, %	B-I-429-3, %	B-O-429-1, %	B-O-429-2, %	B-O-429-3, %	B-U-429-1, %	B-U-429-2, %	B-U-429-3, %	Recovery Limits, %
13C-Fluorene	87	90	82	83	81	80	105	96	93	50-150
Naphthalene-d8	90	69	82	67	65	58	64	94	121	50-150
Acenaphthylene-d8	69	57	63	73	73	76	68	57	60	50-150
Acenaphthene-d10	85	72	76	79	76	83	77	60	44	50-150
Fluorene-d10	84	67	76	70	79	78	70	75	74	50-150
Phenanthrene-d10	96	87	91	78	84	86	75	85	83	50-150
Fluoranthene-d10	109	93	94	81	85	82	72	84	85	50-150
Pyrene-d10	107	90	93	81	86	83	68	75	78	50-150
Benzo(a)anthracene-d12	105	98	105	87	93	99	78	75	82	50-150
Perylene-d12	90	81	88	85	86	84	68	58	64	50-150
Indeno(123cd)pyrene-d12	93	82	94	99	103	104	77	81	79	50-150
Chrysene-d12	101	92	110	74	79	89	71	78	76	50-150
Benzo(b)fluoranthene-d12	104	100	98	107	104	111	88	92	95	50-150
Benzo(k)fluoranthene-d12	99	87	96	84	91	93	86	94	91	50-150
Benzo(a)pyrene-d12	90	82	87	93	97	96	73	67	75	50-150
Dibenz(a,h)anthracene-d14	90	81	92	103	104	105	80	88	88	50-150
Benzo(g,h,i)perylene-d12	91	83	96	91	93	95	70	76	74	50-150

APPENDIX A

PROCESS DATA

PUSHING PROCESS AND CONTROL DEVICE PARAMETERS: TEST RUN NO. 1, 8/11/98

Time	Oven No.	Dry Coal Charged (lbs)	Coking Time (hours)	Amps	Delta P (in. of water)	Inlet Pressure (in. of water)	Damper (% open)
10:34:10	291	64,310	18.6	48	6.2	1.8	54
10:48:00	203	65,238	18.7	46	5.5	1.4	48
11:03:20	213	64,032	18.7	47	4.9	1	49
11:13:20	223	65,053	18.7	49	6.2	1.5	56
11:23:30	233	63,939	18.7	47	5.3	1	53
11:34:20	243	64,496	18.4	46	5.6	1.2	48
11:45:10	253	63,846	18.4	46	5.7	1.4	50
12:01:30	263	65,053	18.5	45	5.4	1.3	44
12:11:20	273	64,032	18.5	47	6.1	1.6	53
12:22:40	283	65,981	18.6	45	5.2	1.4	44
12:37:20	205	64,774	18.6	45	4.7	1	47
12:56:40	215	65,981	18.7	53	6.7	2	69
13:06:50	225	64,682	18.8	47	6	1.4	51
13:26:40	235	65,888	18.9	54	7.5	1.8	72
13:35:40	245	64,589	18.9	46	5.9	1.4	51
13:44:40	255	65,517	18.6	45	5.6	1.2	44
13:54:10	265	64,589	18.5	50	7.3	1.9	64
14:03:30	275	66,074	18.5	45	5.9	1.4	49
14:13:20	285	64,589	18.5	44	5.7	1.3	44
14:23:40	207	65,888	18.5	44	5.9	1.3	47
15:08:00	217	64,682	19.0	51	7	1.7	62
15:16:30	227	64,125	19.0	47	6.4	1.5	53
15:27:50	237	64,774	19.0	46	5.9	1.1	49
15:38:40	247	64,496	19.0	48	6.6	1.5	56
15:48:50	257	65,238	18.8	46	5.2	1.1	51
15:58:30	267	63,475	18.8	45	5.9	1.3	48
16:08:20	277	64,774	18.8	46	5.7	1.4	50
16:18:30	287	65,517	18.8	46	5.8	1.5	49
16:28:30	209	64,125	18.8	44	5.3	1.4	44
16:39:40	219	65,238	18.8	46	5.7	1.3	50
16:58:20	229	64,403	18.9	46	5.8	1.2	50
17:08:20	239	65,331	19.0	47	5.8	1.3	51
17:19:10	249	64,867	19.0	45	5.6	1.3	48
17:33:20	259	65,331	18.2	47	5.6	1.2	53
17:42:40	269	64,960	18.1	46	6	1.4	49
17:58:10	279	65,795	18.2	44	4.6	0.9	44
18:08:00	289	65,146	18.1	44	4.2	0.9	42
18:18:00	202	65,610	18.1	44	5.5	1.4	42
18:34:50	212	65,146	18.2	46	5.9	1.5	50
18:44:00	222	65,238	18.1	49	7	1.5	59
19:03:20	232	64,960	18.3	46	5.9	1.2	49
19:12:40	242	66,445	18.2	46	5.4	0.9	51
19:28:00	252	65,146	18.4	46	5.6	1.3	48
19:37:00	262	65,702	18.1	46	5.8	1.3	48
19:46:20	272	63,939	18.1	49	6.4	1.8	59
20:05:30	282	65,053	--	--	--	--	--

PUSHING PROCESS AND CONTROL DEVICE PARAMETERS: TEST RUN NO. 2, 8/12/98

Time	Oven No.	Dry Coal Charged (lbs)	Coking Time (hours)	Amps	Delta P (in. of water)	Inlet Pressure (in. of water)	Damper (% open)
9:30:50	247	66,430	17.7	47	5.3	1.2	52
9:40:20	257	63,631	17.7	45	5.7	1.3	47
9:51:30	267	65,777	17.7	46	5.5	1.4	49
10:01:50	277	63,444	17.7	44	5.3	1.3	44
10:12:00	287	65,683	17.7	47	5.5	1.5	54
10:24:00	209	63,444	17.7	47	6.2	1.5	54
10:37:20	219	65,683	17.6	48	6.1	1.4	55
10:49:30	229	63,911	17.7	47	6.4	1.3	54
11:11:30	239	64,097	17.9	46	5.9	1.1	51
11:21:20	249	63,631	17.8	48	6.5	1.5	57
11:32:50	259	65,123	17.8	46	5.4	1.1	50
11:42:50	269	63,724	17.7	46	5.6	1.1	51
11:53:00	279	65,310	17.8	45	6.1	1.4	48
12:09:20	289	64,284	17.9	47	6.5	1.6	55
12:31:30	202	63,537	18.0	47	5.7	1.2	51
12:44:30	212	64,004	18.0	46	6.1	1.4	48
12:55:30	222	64,657	17.9	46	5.7	1.1	51
13:06:10	232	64,190	17.9	45	5.7	1.2	45
13:16:50	242	64,284	17.8	46	6.5	1.3	52
13:40:10	252	63,351	18.1	46	4.8	0.9	48
13:50:10	262	65,030	18.1	47	6.2	1.6	52
14:00:00	272	62,978	17.9	48	5.8	1.6	56
14:09:20	282	64,470	17.9	46	5.9	1.5	50
14:28:30	204	63,724	17.9	46	5.5	1.5	49
15:08:30	214	64,750	18.4	48	6.1	1.7	52
15:18:00	224	63,257	18.3	50	6.4	1.7	58
15:28:30	234	64,190	18.3	52	6.9	1.8	64
15:38:50	244	63,724	18.3	47	5.8	1.4	51
15:48:30	254	63,817	18.3	49	6.6	1.7	59
15:59:40	264	64,937	18.4	46	5.6	1.5	51
16:11:40	274	65,497	18.4	45	5.6	1.4	48
16:21:00	284	64,004	18.4	45	5.2	1.4	46
16:32:30	206	64,564	18.4	46	5.9	1.5	51
16:41:40	216	63,817	18.4	46	5.5	1.4	50
17:09:00	226	64,937	17.6	48	5.9	1.5	53
17:19:10	236	64,004	17.6	47	5.7	1.2	51
17:28:50	246	65,403	18.5	47	6	1.4	52
17:38:50	256	63,631	17.6	47	6.2	1.4	54
17:48:40	266	65,217	17.6	46	5.2	1	49
17:59:20	276	64,377	18.5	46	6.1	1.4	49
18:09:30	286	65,777	17.5	45	6	1.4	48
18:31:20	208	63,724	17.6	48	6.8	1.6	54
18:42:40	218	65,123	17.5	49	7.1	1.6	57
18:52:10	228	65,030	17.5	46	5.8	0.9	50
19:02:40	238	65,310	17.5	48	7.1	1.3	58
19:12:00	248	64,377	17.5	47	7	1.4	55
19:32:40	258	65,403	17.7	47	5.9	1.3	53

PUSHING AND PROCESS CONTROL DEVICE PARAMETERS: TEST RUN NO. 3, 8/13/98

Time	Oven No.	Dry Coal Charged (lbs)	Coking Time (hours)	Amps	Delta P (in. of water)	Inlet Pressure (in. of water)	Damper (% open)
8:40:10	204	66,336	18.2	48	5.4	1.4	54
8:52:40	214	64,937	17.6	47	5.3	1.3	52
9:03:50	224	66,056	17.6	46	5.4	1.4	48
9:19:10	234	64,377	17.7	48	6.2	1.5	55
9:29:00	244	65,497	17.7	46	5.8	1.4	50
9:39:50	254	66,430	17.7	46	6	1.5	51
9:49:10	264	65,310	17.6	45	5.7	1.3	45
9:58:40	274	66,336	17.6	47	6.6	1.5	54
10:09:20	284	64,844	17.6	46	5.9	1.4	51
10:33:30	206	65,497	17.9	46	6.1	1.4	49
10:44:50	216	65,310	17.5	47	6.1	1.5	52
10:55:20	226	65,497	17.6	49	6.9	1.5	59
11:05:40	236	65,777	17.6	46	6	1.1	51
11:15:50	246	64,377	17.6	47	6.3	1.4	54
11:35:00	256	64,657	17.8	46	5.6	1.2	48
11:44:50	266	65,963	17.8	45	5	1	48
11:55:40	276	65,030	17.8	45	5.4	1.3	48
12:04:50	286	64,750	17.6	45	5.3	1.1	50
12:33:40	208	64,657	17.8	45	5.2	1.4	44
12:44:20	218	66,243	17.8	46	5.7	1.2	48
12:53:50	228	64,097	17.9	45	5.6	1.2	45
13:03:40	238	66,150	17.9	46	4.8	0.8	50
13:14:30	248	64,844	17.7	47	6.3	1.6	55
13:26:30	258	66,056	17.7	48	6.1	1.6	57
13:36:50	268	65,123	17.7	44	4.8	0.9	47
13:47:40	278	66,056	17.7	46	5.9	1.5	52
14:00:40	288	64,844	17.8	46	6	1.5	51
14:17:50	201	66,243	17.7	46	5.7	1.6	50
15:08:00	211	65,030	18.3	49	6.5	1.8	55
15:17:10	221	65,870	18.3	49	6.2	1.7	58
15:27:20	231	64,844	18.3	48	5.9	1.3	56
15:37:00	241	65,963	18.3	45	5.4	1.2	47
15:47:20	251	65,497	18.2	47	6.2	1.5	55
15:57:00	261	65,497	18.2	45	5.9	1.4	50
16:06:50	271	64,937	18.2	45	5.6	1.3	49
16:16:30	281	65,403	18.2	45	5.9	1.5	49
16:33:20	291	65,123	18.2	47	5.8	1.6	55
16:44:10	203	64,470	18.3	46	5.9	1.6	50
17:00:40	213	66,150	17.6	49	5.9	1.7	59
17:10:00	223	65,777	17.5	49	6	1.5	59
17:20:00	233	65,403	17.5	47	5.4	1.3	55
17:34:40	243	65,310	17.6	50	6.7	1.5	61
17:44:00	253	66,803	17.5	47	5.5	1.3	55
17:59:30	263	65,870	17.6	46	5.4	1.2	52
18:09:10	273	65,123	17.6	47	5.7	1.5	52
18:19:40	283	66,056	17.6	45	5.6	1.5	48
18:35:20	205	65,310	17.6	46	5.2	1.2	50
18:47:30	215	66,616	17.6	46	6.2	1.5	52
19:03:00	225	66,150	17.5	46	5.8	1.3	50
19:13:20	235	66,430	17.5	45	5.8	1.2	47
19:31:10	245	66,336	17.6	46	5.7	1.4	50

Run No.	Date	Run Time	Coal Charged (tons)	Coke Pushed (tons)
B-I-M315-1	08/11/98	1035-2020	1,494	1,115
B-I-M429-1	08/11/98	1030-2016	1,494	1,115
B-I-M5506-1	08/11/98	1206-2007	1,236	922
B-I-M315-2	08/12/98	0922-1941	1,515	1,128
B-I-M429-2	08/12/98	0924-1935	1,515	1,128
B-I-M5506-2	08/12/98	0944-1928	1,481	1,103
B-I-M315-3	08/13/98	0842-1736	1,340	998
B-I-M429-3	08/13/98	1332-1934	943	660
B-I-M5506-3	08/13/98	0842-1710	1,275	974
B-O-M315-1	08/11/98	1035-1958	1,494	1,115
B-O-M429-1	08/11/98	1037-1958	1,494	1,115
B-O-M5506-1	08/11/98	1207-2000	1,204	898
B-O-M315-2	08/12/98	0929-1935	1,515	1,128
B-O-M429-2	08/12/98	0928-1934	1,515	1,128
B-O-M5506-2	08/12/98	0944-1901	1,352	1,031
B-O-M315-3	08/13/98	0840-1749	1,407	1,047
B-O-M429-3	08/13/98	0840-1748	1,407	1,047
B-O-M5506-3	08/13/98	0840-1715	1,275	974
B-U-M315-1	08/14/98	0921-1325	647	481
B-U-M429-1	08/14/98	0921-1325	647	481
B-U-M5506-1	08/14/98	1103-1320	356	267
B-U-M315-2	08/14/98	1441-1809	491	365
B-U-M429-2	08/14/98	1442-1809	491	365
B-U-M5506-2	08/14/98	1441-1755	458	341
B-U-M315-3	08/15/98	0838-1203	550	414
B-U-M429-3	08/15/98	0838-1208	550	414
B-U-M5506-3	08/15/98	0841-1205	518	389

PUSHING PARAMETERS - CAPTURE OBSERVATIONS: BETHLEHEM STEEL, BURNS HARBOR, IN

Time	Oven ID	Pushing Emissions Observations	Travel Emissions Observations
9:30	247	virtually no emiss.	very low
9:40	257	very low	very low
9:51	267	very low	very low
10:01	277	very low	very low
10:11	287	moderate emissions	low
10:23	209	very low	very low
10:37	219	moderate; dark puff	moderate - Green push
10:49	229	low	moderate
11:11	239	very low	low
11:21	249	very low	very low
11:32	259	very low	low
11:42	269	moderate; yellowish smoke for ~4 seconds.	very low
11:52	279	very low	low
12:08	289	moderate-heavy; green push	mod. to heavy - thick green push
12:31	202	very low	low
12:44	212	low - moderate	moderate - somewhat green push
12:55	222	moderate; heavy puff for ~8 sec.	moderate-heavy greenpush?
1:06	232	moderate	very low
1:16	242	very low	low

Wednesday
Date 8/12/98

PUSHING PARAMETERS - CAPTURE OBSERVATIONS: BETHLEHEM STEEL, BURNS HARBOR, IN

Time	Oven ID	Pushing Emissions Observations	Travel Emissions Observations
1:40	252	very low	low
1:49	262	low	very low
1:59	272	low	low - mod.
2:09	282	low - moderate	low
2:28	204	very low	low
3:08	214	very low	low
3:17	224	moderate	very low
3:28	234	low	very low
3:38	244	very low	low
3:48	254	low	low
3:59	264	low	low
4:11	274	low - moderate	low - moderate
4:20	284	low - moderate	moderate, slightly green
4:32	206	low*	low*
4:41	216	low*	low*
5:08	222	low*	low*
5:18	236	very low*	low*
5:28	246	low*	very low*
5:38	256	low*	low*

* sun above + behind battery - visibility difficult.

Date 8/12/98

PUSHING PARAMETERS - CAPTURE OBSERVATIONS: BETHLEHEM STEEL, BURNS HARBOR, IN

Time	Oven ID	Pushing Emissions Observations	Travel Emissions Observations
5:48	266	moderate *	moderate *
5:59	276	low *	very low *
6:09	286	moderate *	low *
6:31	208	low *	low *
6:42	218	very low *	low *
6:52	228	low *	low *
7:02	238	low *	very low *
7:11	248	very low *	low *
7:32	258	very low *	low *

* sun above + behind battery - visibility difficult.

Date 8/12/98

PUSHING PARAMETERS - CAPTURE OBSERVATIONS: BETHLEHEM STEEL, BURNS HARBOR, IN

Time	Oven ID	Pushing Emissions Observations	Travel Emissions Observations
8:39	204	very low	low
8:52	214	very low	very low
9:03	224	moderate	very low
9:18	234	high/mod for ~10 sec., then low	very low
9:28	244	low	low
9:39	254	very low	low
9:49	264	low - moderate	very low
9:58	274	moderate	low
10:09	284	moderate	very low
10:33	206	low	low
10:44	216	low - moderate	low
10:55	226	low	low
11:03	236	mod ~5 sec → low	very low
11:15	246	low	very low
11:34	256	low	very low
11:44	266	very low	very low
11:55	276	very low	very low
12:04	286	low	low
12:33	208	low	low - moderate

Thursday

Date 8/13/98

PUSHING PARAMETERS - CAPTURE OBSERVATIONS: BETHLEHEM STEEL, BURNS HARBOR, IN

Time	Oven ID	Pushing Emissions Observations	Travel Emissions Observations
12:44	218	12:43 - end of testing (filter change)	
?	228		
1:10	238	moderate. high opacity from door removal to push	mod. (green end?)
1:14	248	low - moderate	low
1:26	258	~~low-moderate~~ ?	~~low~~ ?
1:36	268	low - moderate	low
1:47	278	low	low
2:00	288	moderate; black smoke	mod.; somewhat green
2:17	201	moderate - heavy	low - moderate
3:07	211	very low	very low
3:16	221	moderate	low
3:27	231	mod.	low
3:37	241	low - moderate	low
3:47	251	low - moderate	low
3:56	261	low	very low
4:06	271	moderate	low
4:16	281	low - moderate	low - moderate
4:33	291	low - moderate	very low
4:44	203	low - mod.	very low

Date 8/13/98

PUSHING PARAMETERS - CAPTURE OBSERVATIONS: BETHLEHEM STEEL, BURNS HARBOR, IN

NOTE: For All readings on this page: Sun was above + behind battery - visibility difficult.

Time	Oven ID	Pushing Emissions Observations	Travel Emissions Observations
5:00	213	low	low
5:09	223	low	low
5:19	233	moderate to low	low
5:34	243	low	very low
5:43	253	low	low
5:59	263	low	low
6:08	273	low	very low
6:19	283	low	low
6:35	205	very low	very low
6:47	215	low	very low
7:02	225	very low	low
7:13	235	low	low
7:31	245	low - moderate	low

Date 8/13/98

Figure 3-2: Chart of 6-Minute Opacity Averages From COM on August 13-14, 1998

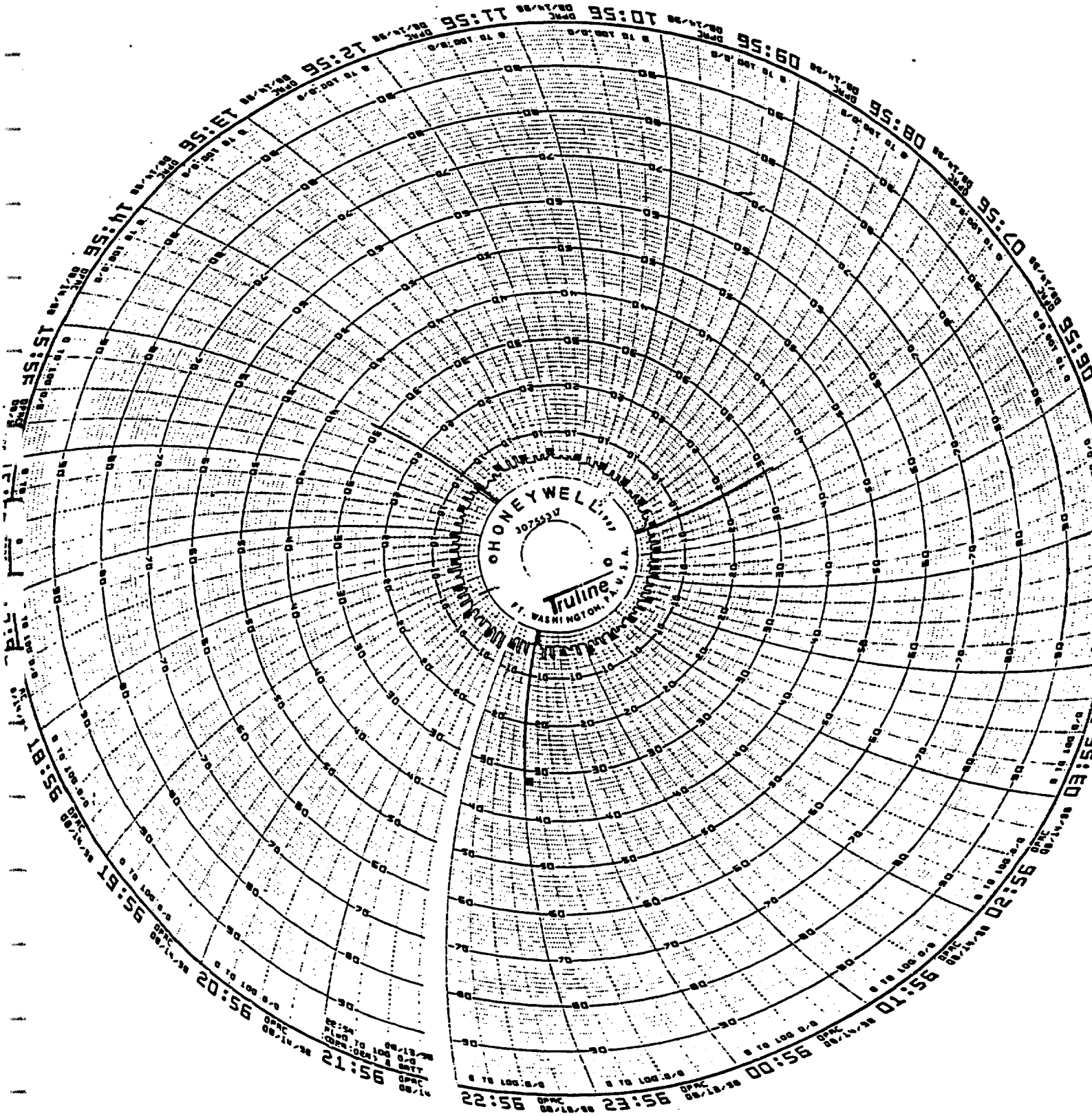

11:00 PM 8/13/98 through 11:00 PM 8/14/98

Figure 3-3: Chart of 6-Minute Opacity Averages From COM on August 14-15, 1998

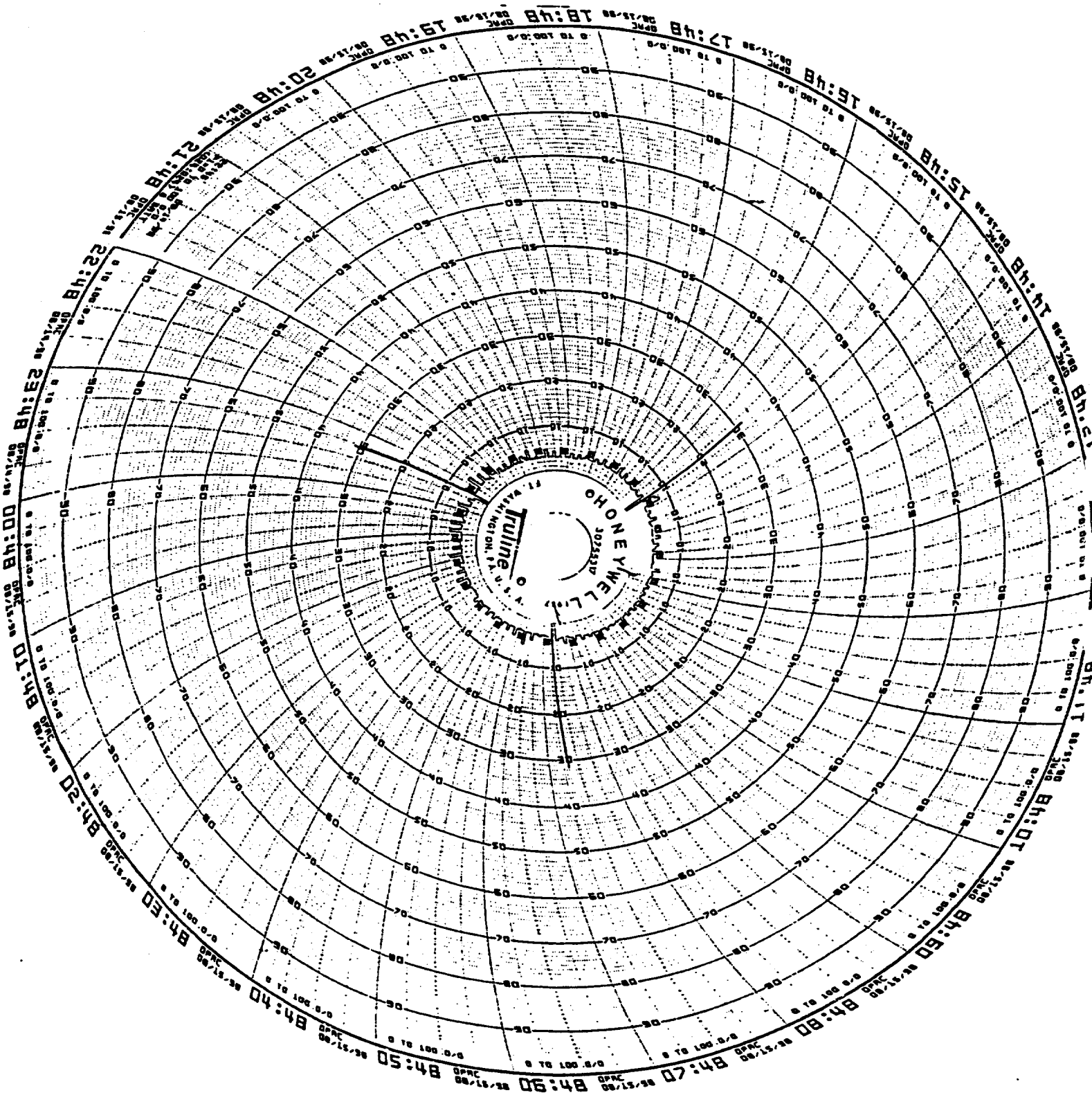

11:00 PM 8/14/98 through 11:00 PM 8/15/98

APPENDIX B

RAW FIELD DATA

TRAVERSE POINT LOCATION FOR CIRCULAR DUCTS

Plant: Bethlehem Steel - Chesterton, IN

Date: 8/10/98

Sampling Location: Baghouse Inlet # 2 Coke Oven Battery

Inside of Far Wall to Outside of Nipple: 120.25"

Inside of Near Wall to Outside of Nipple (Nipple Length): 6.25" → flow

Stack I.D.: 114.0"

Distance Downstream from Flow Disturbance (Distance B):

572 ~~527~~ inches / Stack I.D. = 5.02 ~~4.62~~ dd

Distance Upstream from Flow Disturbance (Distance A):

181 inches / Stack I.D. = 1.7 dd

Calculated By: RK/GG/JC

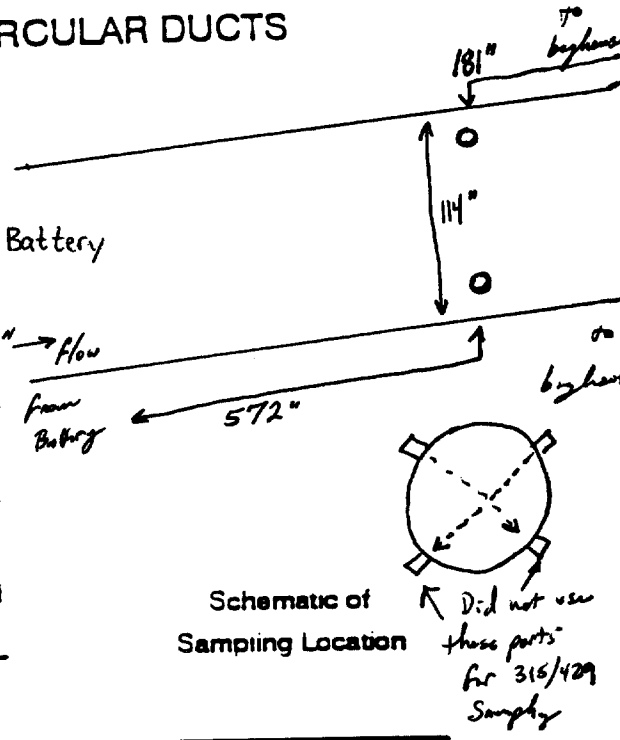

Schematic of Sampling Location

Traverse Point Number	Fraction of Length	Length (inches)	Product of Columns 2 & 3 (To nearest 1/8")	Nipple Length (inches)	Traverse Point Location (Sum of Col. 4 & 5)
1	0.026	114"	2.96	6"	8.0
2	0.082		9.3		15 3/8
3	0.146		16.6		22 5/8
4	0.226		25.7		31 3/4
5	0.342		36.9		33.0
6	0.658		75.0		81.0
7	0.774		88.2		94 1/4
8	0.854		97.3		103 1/4
9	0.918		104.6		110 5/8
10	0.974		111.0		117.0

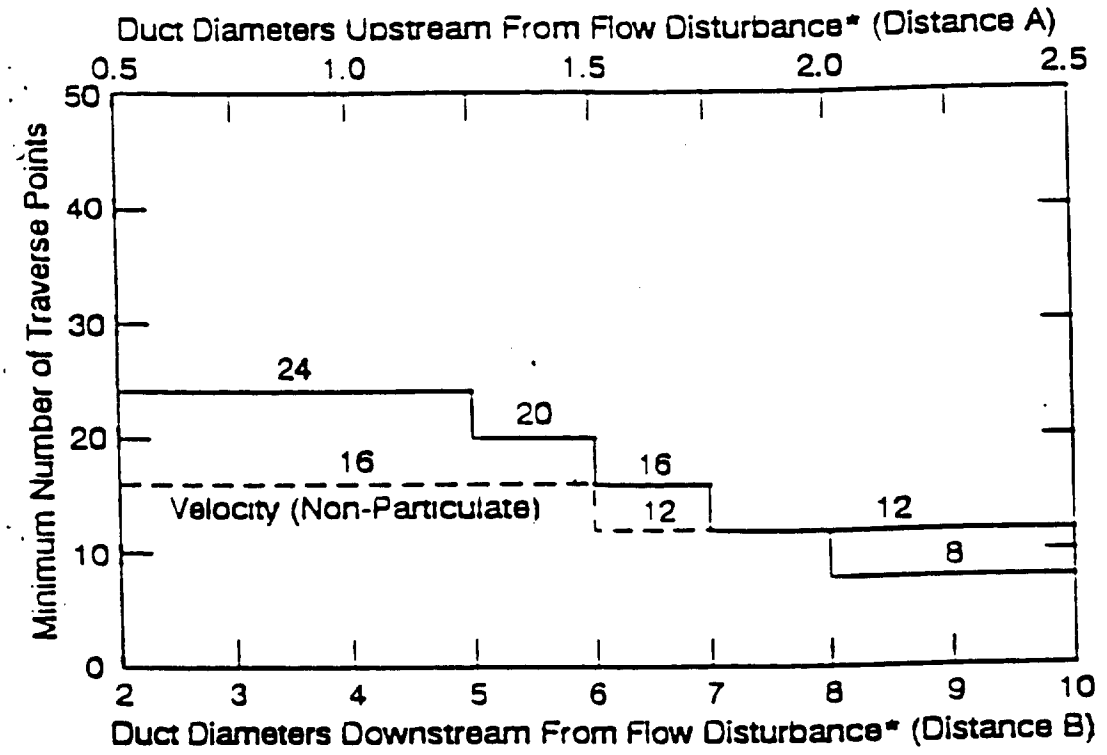

* From Point of Any Type of Disturbance (Bend, Expansion, Contraction, etc)

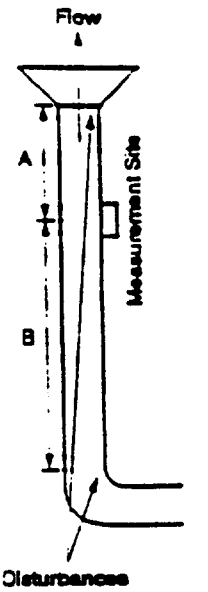

LOCATION OF TRAVERSE POINTS IN CIRCULAR DUCTS
(Fraction of Stack Diameter from Inside Wall to Traverse Point)

Traverse Point Number on a Diameter	Number of Traverse Points on a Diameter				
	4	6	8	10	12
1	0.067	0.044	0.032	0.026	0.021
2	0.250	0.146	0.105	0.082	0.067
3	0.750	0.296	0.194	0.146	0.118
4	0.933	0.704	0.323	0.226	0.177
5		0.854	0.677	0.342	0.250
6		0.956	0.806	0.658	0.356
7			0.895	0.774	0.644
8			0.968	0.854	0.750
9				0.918	0.823
10				0.974	0.882
11					0.933
12					0.979

GAS VELOCITY AND VOLUMETRIC FLOW RATE

Plant: Bethlehem Steel Date: 8-10-92
Sampling Location: Inlet Clock Time: _____
Run #: _____ Operators: GG
Barometric Pressure, in. Hg: _____ Static Pressure, in. H_2O: -2.2
Moisture, %: _____ Molecular wt., Dry: _____ Pitot Tube, Cp: .84
Stack Dimension, in. Diameter or Side 1: _____ Side 2: _____
Wet Bulb, °F: _____ Dry Bulb, °F: _____

Traverse Point Number	Velocity Head in. H_2O (.01)	Stack Temp. °F (98)
1	1.1	162
2	.95	203
3	.92	212
4	.85	265
5		
6		
~~1~~	~~1.4~~	~~310~~
~~2~~	~~1.2~~	~~320~~
~~3~~	~~.95~~	~~328~~
~~4~~	~~.89~~	~~363~~
5		
6		
	$\sqrt{\overline{\Delta P}}$ = .9761	$\overline{Ts}$ = 218

$Md = (0.44 \times \%CO_2) + (0.32 \times \%O_2) + (0.28 \times \%N_2)$

$Md = (0.44 \times \quad) + (0.32 \times \quad) + (0.28 \times \quad)$

Md = 28.82

$Ms = Md \times (1 - \frac{\%H_2O}{100}) + 18 (\frac{\%H_2O}{100})$

$Ms = (\quad) \times (1 - \frac{\quad}{100}) + 18 (\frac{\quad}{100})$

Ms = 28.29

$\overline{Ts}$ = °F = °R (°F + 460)

$Ps = Pb + \frac{S.P.}{13.6} = (\quad) + \frac{\quad}{13.6}$

Ps = 29.53 in. Hg

$\sqrt{\overline{\Delta P}}$ =

$Vs = 85.49 \times Cp \times \sqrt{\overline{\Delta P}} \times \sqrt{\frac{Ts\ (°R)}{Ps \times Ms}}$

$Vs = 85.49 \times (\quad) \times (\quad) \times \sqrt{\quad}$

Vs = 63.13 ft/s

As = ft^2

Qs = Vs x As x 60 s/m

Qs = x x 60

Qs = acfm

$Qs_{std} = Qs \times 17.647 \times \frac{Ps}{Ts} \times (1 - \frac{\%H_2O}{100})$

$Qs_{std} = \quad \times 17.647 \times \frac{\quad}{\quad} \times (1 - \frac{\quad}{100})$

Qs_{std} = dscfm

.9555

Pacific Environmental Services, Inc.

EPA Coke - Bethlehem Steel

Dry Molecular Weight Determination

Client/Project: 5506.000

Date/Time: 8/11/98

Sample Type: Orsat

Ambient Temp. °F: 70°F

Orsat No.: 1

Operator: R/Kelly / D Schaffel

Comments:

Site Location: Baghouse Inlet

Run No.(s)	Gas	Run 1		Run 2		Run 3		Average Net Volume %	Multiplier	Molecular Weight of Stack Gas, Md (lb/Mole)
B-I-1A		Actual	Net	Actual	Net	Actual	Net			
	CO_2	0.6	0.6	0.5	0.5			0.55	0.44	
	O_2[a]	20.6	20.0	20.6	20.1			20.05	0.32	
	CO[b]								0.28	
	N_2[c]	100.0	79.4	100.0	79.4			79.4	0.28	
									Md =	

Run No.(s)	Gas	Run 1		Run 2		Run 3		Average Net Volume %	Multiplier	Molecular Weight of Stack Gas, Md (lb/Mole)
B-I-1B		Actual	Net	Actual	Net	Actual	Net			
	CO_2	0.4	0.4	0.5	0.5			0.45	0.44	
	O_2[a]	20.5	20.1	20.5	20.0			20.05	0.32	
	CO[b]								0.28	
	N_2[c]	100.0	79.5	100.0	79.5			79.5	0.28	
									Md =	

Run No.(s)	Gas	Run 1		Run 2		Run 3		Average Net Volume %	Multiplier	Molecular Weight of Stack Gas, Md (lb/Mole)
B-I-1.C		Actual	Net	Actual	Net	Actual	Net			
	CO_2	0.5	0.5	0.5	0.5			0.5	0.44	
	O_2[a]	20.6	20.1	20.5	20.0			20.05	0.32	
	CO[b]								0.28	
	N_2[c]	100.0	79.4	100.0	79.5			79.45	0.28	
									Md =	

[a] O_2 Net Volume is O_2 actual reading minus CO_2 actual reading.

[b] CO Net Volume is CO actual reading minus O_2 actual reading.

[c] N_2 Net Volume is 100 minus CO actual reading.

PACIFIC ENVIRONMENTAL SERVICES, INC.

Pacific Environmental Services, Inc.

Dry Molecular Weight Determination

Client/Project: Bethlehem Steel S566.000

Date/Time: 8/12/98

Sample Type: Orsat

Ambient Temp. °F: 70

Orsat No.: 1

Operator: RKH/R Dubrow

Comments:

Site Location: Inlet to Baghouse

Run No.(s)	Gas	Run 1		Run 2		Run 3		Average Net Volume %	Multiplier	Molecular Weight of Stack Gas, Md (lb/Mole)
		Actual	Net	Actual	Net	Actual	Net			
B-I-2A	CO_2	0.5	0.5	0.5	0.5			0.5	0.44	
	O_2[a]	20.5	20.0	20.5	20.0			20.0	0.32	
	CO[b]								0.28	
	N_2[c]	100.0	79.5	100.0	79.5			79.5	0.28	
									Md =	

Run No.(s)	Gas	Run 1		Run 2		Run 3		Average Net Volume %	Multiplier	Molecular Weight of Stack Gas, Md (lb/Mole)
		Actual	Net	Actual	Net	Actual	Net			
B-I-2B	CO_2	0.6	0.6	0.5	0.5			0.5	0.44	
	O_2[a]	20.6	20.0	20.5	20.0			20.0	0.32	
	CO[b]								0.28	
	N_2[c]	100.0	79.4	100.0	79.5			79.55	0.28	
									Md =	

Run No.(s)	Gas	Run 1		Run 2		Run 3		Average Net Volume %	Multiplier	Molecular Weight of Stack Gas, Md (lb/Mole)
		Actual	Net	Actual	Net	Actual	Net			
B-I-2C	CO_2	0.5	0.5	0.5	0.5			0.5	0.44	
	O_2[a]	20.5	20.0	20.5	20.0			20.0	0.32	
	CO[b]								0.28	
	N_2[c]	100.0	79.5	100.0	79.5			79.5	0.28	
									Md =	

[a] O_2 Net Volume is O_2 actual reading minus CO_2 actual reading.

[b] CO Net Volume is CO actual reading minus O_2 actual reading.

[c] N_2 Net Volume is 100 minus CO actual reading.

PACIFIC ENVIRONMENTAL SERVICES, INC.

Pacific Environmental Services, Inc.

Dry Molecular Weight Determination

Client/Project: EPA Coke Bethlehem Steel / 5506.000

Date/Time: 8/13/98

Sample Type: Orsat

Ambient Temp. °F: 70°F

Orsat No.: 1

Operator: RKolde

Comments:

Site Location: Burghrose Inlet

Run No.(s)	Gas	Run 1		Run 2		Run 3		Average Net Volume %	Multiplier	Molecular Weight of Stack Gas, Md (lb/Mole)
		Actual	Net	Actual	Net	Actual	Net			
B-I-3A	CO_2	0.6	0.6	0.6	0.6			0.6	0.44	
	O_2[a]	20.5	19.9	20.6	20.0			19.95	0.32	
	CO[b]								0.28	
	N_2[c]	100.0	79.5	100.0	79.4			79.45	0.28	
									Md =	

Run No.(s)	Gas	Run 1		Run 2		Run 3		Average Net Volume %	Multiplier	Molecular Weight of Stack Gas, Md (lb/Mole)
		Actual	Net	Actual	Net	Actual	Net			
B-I-3B	CO_2	0.5	0.5	0.5	0.5			0.5	0.44	
	O_2[a]	20.5	20.0	20.5	20.0			20.0	0.32	
	CO[b]								0.28	
	N_2[c]	100.0	79.5	100.0	79.5			79.5	0.28	
									Md =	

Run No.(s)	Gas	Run 1		Run 2		Run 3		Average Net Volume %	Multiplier	Molecular Weight of Stack Gas, Md (lb/Mole)
		Actual	Net	Actual	Net	Actual	Net			
B-I-3C	CO_2	0.4	0.4	0.5	0.5			0.45	0.44	
	O_2[a]	20.6	20.2	20.5	20.0			20.1	0.32	
	CO[b]								0.28	
	N_2[c]	100.0	79.4	100.0	79.5			79.55	0.28	
									Md =	

[a] O_2 Net Volume is O_2 actual reading minus CO_2 actual reading.

[b] CO Net Volume is CO actual reading minus O_2 actual reading.

[c] N_2 Net Volume is 100 minus CO actual reading.

PACIFIC ENVIRONMENTAL SERVICES, INC.

Sample rate 1 l/minute Steady

METHOD 18 FIELD DATA SHEET

Plant: Bethlehem Steel
Date: 8/11/98
Location: Bugbum Inlet
Run #: B-I-5506-1
Stack I.D.: 114"
Pbar: 29.70
Sample Tube #: B-I-5506-1 A,B,C (Three tubes)
Operators: RR / JC
Leak Check: Pre: ✓ Post: ✓

Tested Analyte: PAH's
Orifice Tank #: VB-1
Pump/Rotometer #: VOST BOX #1
Pt: Pretest (mm Hg): NA
Post-Test (mm Hg): NA
Tt: Pretest (°F): NA
Post-Test (°F): NA
Time: Start: 1206 Finish: 2007 Total: 331.4 min
W/B: NA D/B: NA O_2: 21 CO_2: 0

	Time	Gauge Vacuum (Hg)	Flow Setting	TM
1206 Start 0	1206 - 243.47	1	1 l/min	72
15	1221 258.0	1.8	1.0	74
30	1236 271.7	1.8	1.0	74
45	1251 286.4	1.8	1.0	75
60	1306 298.7	1.8	1.0	77
75	1321 313.4	1.8	1.0	77

	Time ~~Traverse Point~~ 13% Number	Gauge ~~Velocity Head in. H_2O~~	Flow ~~Stack Temp. °F~~	TM
90	0327.5	1.8	1.0	77
105	1351 341.0	1.8	1.0	77
125	1411 360.8	1.8	1.0	78
140	1426 375.9	1.8	1.0	78
156.4	1442 392.25	1.8	1.0	79
0	1712 392.25	1.8	1.0	74
18	1730 411.9	1.8	1.0	76
30	1742 421.9	1.8	1.0	77
90	1842 479.0	1.8	1.0	77
105	1857 492.6	1.8	1.0	76
120	1912 506.7	1.8	1.0	75
137	1929 522.5	1.8	1.0	74
153	1945 537.2	1.8	1.0	74
175	2007 558.89	1.8	1.0	74

$Md = (0.44 \times \%CO_2) + (0.32 \times \%O_2) + (0.28 \times \%N_2)$

$Md = (0.44 \times \quad) + (0.32 \times \quad) + (0.28 \times \quad)$

$Md =$

$Ms = Md \times (1 - \frac{\%H_2O}{100}) + 18 (\frac{\%H_2O}{100})$

$Ms = (\quad) \times (1 - \frac{\quad}{100}) + 18 (\frac{\quad}{100})$

$Ms =$

$Ts = \quad °F = \quad °R \ (°F + 460)$

$Ps = Pb + \frac{S.P.}{13.6} = (\quad) + \frac{\quad}{13.6}$

$Ps = \quad$ in. Hg

$\sqrt{\overline{\Delta P}} =$

$Vs = 85.49 \times Cp \times \sqrt{\overline{\Delta P}} \times \sqrt{\frac{Ts\ (°R)}{Ps \times Ms}}$

$Vs = 85.49 \times (\quad) \times (\quad) \times \sqrt{\quad}$

$Vs = \quad$ ft/s

$As = \quad ft^2$

$Qs = Vs \times As \times 60$ s/m

$Qs = \quad \times \quad \times 60$

$Qs = \quad$ acfm

$Qs_{std} = Qs \times 17.647 \times \frac{Ps}{Ts} \times (1 - \frac{\%H_2O}{100})$

$Qs_{std} = \quad \times 17.647 \times \frac{\quad}{\quad} \times (1 - \frac{\quad}{100})$

$Qs_{std} = \quad$ dscfm

METHOD 18 FIELD DATA SHEET

Plant: Bethlehem Steel
Date: 8/12/98
Location: Inlet
Run #: Run # 2
Stack I.D.: 114"
Pbar: 29.80
Sample Tube #: B-I-5506-2A,B,C
Operators: JC/RK
Leak Check: Pre: ✓ Post:

Tested Analyte: PAH's - Nioxh 5506
Orifice Tank #: ~~NA~~ V-1
Pump/Rotometer #: VOST BOX 1
Pt: Pretest (mm Hg): NA
Post-Test (mm Hg): NA
Tt: Pretest (°F): NA
Post-Test (°F): NA
Time: Start: 944 Finish: Total:
W/B: NA D/B: NA O_2: 20.5 CO_2: 0.5

	Time	Vol.	Gauge Vacuum (Hg)	Flow Setting	TM
0	944	558.37	1.8	1.0	73
15	959	572.5	1.8	1.0	77
30	1014	586.8	1.8	1.0	81
45	1029	600.2	1.8	1.0	82
60	1044	614.0	1.8	1.0	82
75	1059	628.4	1.8	1.0	80
90	1114	642.2	1.8	1.0	78

	Time ~~Traverse Point Number~~	Vol	Gage ~~Velocity Head in H_2O~~	Flow ~~Stack Temp. °F~~	
110	1134	660.7	1.8	1.0	77
120	1144	670.1	1.8	1.0	77
135	1159	684.6	1.8	1.0	77
149	1212	698.0	4.0	1.5	77
165	1228	721.9	4.0	1.5	77
180	1243	744.4	4.0	1.5	77
195	1258	766.8	4.0	1.5	77
210	1313	788.6	4.0	1.5	77
240	1343	832.70	4.0	1.5	77
	1548				
255	1603	854.0	4.0	1.5	73
270	1618	878.5	4.0	1.5	74
285	1633	~~898.0~~	4.0	1.5	75
		897.2			
300	1638	920.3	4.0	1.5	75
315	1703	940.8	4.0	1.5	75
330	1718	962.0	4.0	1.5	76
345	1733	984.5	4.0	1.5	77
360	1748	1004.5	4.0	1.5	78
375	1803	1026.0	5.0	1.5	77
390	1818	1048.0	5.0	1.5	77
405	1833	1070.0	5.0	1.5	78
420	1848	1091.4	5.0	1.5	77
435	1903	1113.0	5.0	1.5	77
450	1918	1134.0	5.0	1.5	77
465	1933	1148.00	5.0	1.5	77
~~465~~	~~1948~~				

* increased sampling rate to 1.5 l/min.

$Md = (0.44 \times \%CO_2) + (0.32 \times \%O_2) + (0.28 \times \%N_2)$

$Md = (0.44 \times \quad) + (0.32 \times \quad) + (0.28 \times \quad)$

$Md =$

$Ms = Md \times (1 - \frac{\%H_2O}{100}) + 18 (\frac{\%H_2O}{100})$

$Ms = (\quad) \times (1 - \frac{\quad}{100}) + 18 (\frac{\quad}{100})$

$Ms =$

$Ts = \quad °F = \quad °R \ (°F + 460)$

$Ps = Pb + \frac{S.P.}{13.6} = (\quad) + \frac{\quad}{13.6}$

$Ps = \quad$ in. Hg

$\sqrt{\overline{\Delta P}} =$

$Vs = 85.49 \times Cp \times \sqrt{\overline{\Delta P}} \times \sqrt{\frac{Ts\ (°R)}{Ps \times Ms}}$

$Vs = 85.49 \times (\quad) \times (\quad) \times \sqrt{\quad}$

$Vs = \quad$ ft/s

$As = \quad ft^2$

$Qs = Vs \times As \times 60$ s/m

$Qs = \quad \times \quad \times 60$

$Qs = \quad$ acfm

$Qs_{std} = Qs \times 17.647 \times \frac{Ps}{Ts} \times (1 - \frac{\%H_2O}{100})$

$Qs_{std} = \quad \times 17.647 \times \frac{\quad}{\quad} \times (1 - \frac{\quad}{100})$

$Qs_{std} = \quad$ dscfm

METHOD 18 FIELD DATA SHEET

Plant: Bethlehem Steel
Date: 8/13/98
Location: Inlet
Run #: Run # 3
Stack I.D.: 114"
Pbar: 29.80
Sample Tube #: B-I-5506-3 Tube A,B,C
Operators: JC
Leak Check: Pre: ✓ Post: ✓

Tested Analyte: NIOSH 5506
Orifice Tank #: V-1
Pump/Rotometer #: VOST BOX 1
Pt: Pretest (mm Hg): NA
Post-Test (mm Hg): NA
Tt: Pretest (°F): NA
Post-Test (°F): NA
Time: Start: 842 Finish: 1710 Total: 480
W/B: NA D/B: NA O_2: 20.5 CO_2: 0.5

	Time	Vol	Gauge Vacuum (Hg)	Flow Setting	TM
0	842	1149.54	3.0	1.5	68
15	857	1170.8	3.0	1.5	72
33	938	1195.8	3.0	1.5	76
45	937	1212.5	3.0	1.5	79
60	942	1236.8	3.0	1.5	80
75	957	1254.8	3.5	1.5	83
90	1012	1276.4	3.5	1.5	84

	Time	Vol	Gage	Flow	TM
	~~Traverse Point Number~~		~~Velocity Head in. H_2O~~	~~Stack Temp. °F~~	
105	1027	1249.0	4.0	1.5	86
120	1047	1329.6	4.0	1.5	87
140	1107	1352.0	4.0	1.5	86
150	1117	1367.8	4.0	1.5	86
165	1132	1389.5	4.0	1.5	85
183	1150	1416.1	4.0	1.5	85
200	1207	1441.1	4.5	1.5	86
210	1217	1455.6	5.0	1.5	86
225	1232	1478.1	5.0	1.5	85
267 ~~240~~ 32	1214	1540.52	5.0	1.5	85
	1337				
270	1340	1543.7	5.0	1.5	77
285	1355	1565.0	5.0	1.5	77
300	1410	1586.8	5.0	1.5	77
315	1425	1607.9	5.0	1.5	78
334	1444	1635.4	5.0	1.5	78
348	1458	1655.6	5.0	1.5	79
360	1510	1673.8	5.0	1.5	79
380	1530	1702.0	5.0	1.5	80
396	1546	1724.2	5.0	1.5	80
405	1555	1738.1	5.0	1.5	80
420	1610	1758.3	5.0	1.5	81
435	1625	1779.9	5.0	1.5	81
450	1640	1799.2	5.0	1.5	80
465	1655	1823.7	5.0	1.5	79
480	1710	1845.47	5.0	1.5	79

$Md = (0.44 \times \%CO_2) + (0.32 \times \%O_2) + (0.28 \times \%N_2)$

$Md = (0.44 \times \quad) + (0.32 \times \quad) + (0.28 \times \quad)$

$Md =$

$Ms = Md \times (1 - \frac{\%H_2O}{100}) + 18 (\frac{\%H_2O}{100})$

$Ms = (\quad) \times (1 - \frac{\quad}{100}) + 18 (\frac{\quad}{100})$

$Ms =$

$Ts = \quad °F = \quad °R \ (°F + 460)$

$Ps = Pb + \frac{S.P.}{13.6} = (\quad) + \frac{\quad}{13.6}$

$Ps = \quad$ in. Hg

$\sqrt{\Delta P} =$

$Vs = 85.49 \times Cp \times \sqrt{\Delta P} \times \sqrt{\frac{Ts\ (°R)}{Ps \times Ms}}$

$Vs = 85.49 \times (\quad) \times (\quad) \times \sqrt{\frac{\quad}{\quad}}$

$Vs = \quad$ ft/s

$As = \quad ft^2$

$Qs = Vs \times As \times 60$ s/m

$Qs = \quad \times \quad \times 60$

$Qs = \quad$ acfm

$Qs_{std} = Qs \times 17.647 \times \frac{Ps}{Ts} \times (1 - \frac{\%H_2O}{100})$

$Qs_{std} = \quad \times 17.647 \times \frac{\quad}{\quad} \times (1 - \frac{\quad}{100})$

$Qs_{std} = \quad$ dscfm

Pg 1 of 4

FIELD DATA SHEET

Plant: BETHLEHEM STEEL
Sampling Location INLET
Run Number: BJ M315-1 Date: 8-11-97
Pretest Leak Rate: .01 cfm @ 15 in. Hg.
Pretest Leak Check: Pitot: ✓ Orsat: ✓

Sample Type: M 315 Operator: GGM
Pbar: 29.7 Ps: -2.2
CO2: 0 O2: 21 AMBIENT
Probe Length/Type: 10' GLASS Pitot #: RP20
Stack Diameter: 114 As: 70.88

Nozzle ID: 1215 Thermocouple #: RP20
Assumed Bws: 5 Filter #: 0708-05
Meter Box #: 1 Y: 1.012 ΔH@: 1.954
Post-Test Leak Rate: .001 cfm @ 5 in. Hg. FILTER BACK
Post-Test Leak Check: Pitot: ✓ Orsat: ✓

Traverse Point Number	Sampling Time (min)	Clock Time (24-hour clock)	Gas Meter Reading (Vm) ft³	Velocity Head (Δp) in H2O	Orifice Pressure Differential (ΔH) in H2O Desired	Orifice Pressure Differential (ΔH) in H2O Actual	Stack Temp. (Ts)	Temperature °F Probe	Temperature °F Filter	Impinger Temp. °F	Dry Gas Meter Temp. Inlet (Tm in °F)	Dry Gas Meter Temp. Outlet (Tm out °F)	Pump Vacuum (in. Hg)
1	0	1035	895.756										
	2	1037	896.5	.02	.01	.04	101	254	264	69	74	74	2
	6	1040	—	.54	.91	.91	254	252	250	69	77	75	—
	10	1046	898.2	.02	.04	.04	144	252	250	69	77	75	2
		1051	—	.54	.91	.91	275	254	245	69	77	75	—
		1053	900.3	.02	.038	.04	162	252	245	69	77	75	2
2	27	1102	902.1	.02	.04	.04	104	252	250	63	78	76	2
2		1106	902.8	.95	1.5	1.5	295	249	253	56	78	76	4
		1108	904.6	.02	.04	.04	143	250	255	57	78	76	2
		1116	905.8	.95	1.5	1.5	310	254	250	57	78	76	4
		1118	906.3	.02	.04	.04	142	254	252	58	78	76	2
		1126	907.7	.95	1.5	1.5	320	255	253	58	79	76	4
		1128	908.7	.02	.04	.04	122	253	252	58	79	76	2
3		1130	909.4	.02	.04	.04	115	255	254	58	79	76	2
		1137	910.6	1.2	1.7	1.7	367	~~367~~ 252	255	54	79	76	5
		1139	911.9	.02	.04	.04	119	235	252	54	79	76	2
		1148	913.7	1.2	1.7	1.7	375	255	254	53	79	76	5
		1150	915.1	.02	.04	.04	138	254	252	53	79	76	2
4		1200	917.6	.02	.06	.06	114	255	253	52	79	76	2
		1204	917.9	1.2	1.8	1.8	308	252	251	55	82	77	5
		1206	919.2	.02	.06	.06	132	253	252	55	82	77	2
		1214	920.4	1.2	1.8	1.8	315	254	253	56	82	77	5
		1216	921.6	.02	.06	.06	123	249	252	57	82	78	2
		1223	923.0	.02	.06	.06	115	250	253	58	82	78	2
5		1225	923.3	1.2	1.8	1.8	329	251	252	58	82	78	5
		1227	924.5	.02	.06	.06	130	253	252	59	82	78	2
		1237	925.9	.02	.06	.06	114	253	253	59	82	78	2

ΔVm= 126.092 $\overline{\sqrt{\Delta p}}$= ____ $\overline{\Delta H}$= ____ $\overline{Ts}$= ____ $\overline{Tm}$= 80

Plant Name: BETHLEHEM STEEL **Test Date:** 8-11-97

Run Number: B I-M5 15-1 **Operator:** GGOK

Traverse Point Number	Sampling Time, (min.)	Clock Time (24-hour clock)	Gas Meter Reading (V_m) ft³	Velocity Head (ΔP_s) in. H_2O	Orifice Pres. Differential (ΔH) in. H_2O Desired	Orifice Pres. Differential (ΔH) in. H_2O Actual	Stack Temp. °F (T_s)	Probe Temp. / Filter Temp.° F	Impinger Temp. °F	Dry Gas Meter Temp. Inlet (T_{in}) °F	Dry Gas Meter Temp. Outlet (T_{out}) °F	Pump Vacuum In. Hg
5		1240	926.6	1.2	1.8	1.8	326	248 / 251	59	82	78	5
	128	1242	926.0	.03	.06	.06	108	250 / 255	60	82	78	2
6		1256	930.2	.03	.06	.06	108	251 / 252	60	83	78	2
		1259	930.7	1.2	1.8	1.8	319	252 / 251	59	82	78	5
		1301	932.0	.03	.06	.06	111	255 / 253	58	82	78	2
		1310	933.9	.92	1.3	1.3	355	253 / 255	58	82	78	5
		1312	935.7	.03	.06	.06	110	251 / 253	58	83	78	2
7		1320	936.6	.03	.06	.06	100	255 / 257	58	83	78	2
		1329	937.1	1.2	1.8	1.8	327	257 / 253	56	83	78	5
		1331	←	.03	.06	.06	110	255 / 255	56	83	78	2
		1338	940.6	1.2	1.8	1.8	325	244 / 256	53	82	78	6
		1340	941.9	.03	.06	.06	107	251 / 258	53	82	78	2
8		1347	943.3	1.2	1.8	1.8	344	251 / 258	52	82	78	6
		1349	944.6	.03	.06	.06	118	255 / 251	52	82	78	2
		1354	945.5	.03	.06	.06	113	240 / 236	52	82	78	2
		1356	945.8	1.2	1.8	1.8	330	251 / 255	52	82	79	6
		1358	947.1	.03	.06	.06	113	252 / 250	55	82	79	2
		1406	948.6	1.2	1.8	1.8	328	255 / 255	58	82	79	6
		1408	949.8	.03	.06	.06	125	253 / 253	58	82	79	2
9		1415	951.0	.03	.06	.06	117	250 / 258	58	83	79	2
		1416	951.8	.95	1.4	1.4	334	255 / 256	58	83	79	6
		1418	952.4	.03	.06	.06	117	248 / 250	59	83	79	2
		1426	953.8	.95	1.4	1.4	410	255 / 262	59	84	79	6
		1428	955.0	.03	.06	.06	127	255 / 253	59	82	79	2

Plant Name: Bethlehem Steel **Test Date:** 8-11-92

Run Number: BI M315-1 **Operator:** GGAK

Traverse Point Number	Sampling Time, (min.)	Clock Time (24-hour clock)	Gas Meter Reading (V_m) ft³	Velocity Head (ΔP_s) in. H_2O	Orifice Pres. Differential (ΔH) in. H_2O Desired	Actual	Stack Temp. °F (T_s)	Probe Temp. / Filter Temp. °F	Impinger Temp. °F	Dry Gas Meter Temp. Inlet (T_{in}) °F	Outlet (T_{out}) °F	Pump Vacuum In. Hg
Leak check												Leak V
9		1434	958.0	.03	.06	.06	119	250 / 253	59	81	79	2
-0.152		1442	959.5	.03	.06	.06	106	248 / 252	59	84	80	2
Port Change		1454	961.052	.03	.06	.06	106	250 / 251	55	81	79	2
			961.204					/				
B 1		1700	—	.03	.06	.06	116	255 / 257	60	78	78	2
		1710	962.5	.03	.06	.06	109	252 / 256	60	79	78	2
		1711	—	.99	1.5	1.5	322	253 / 252	60	79	78	5
		1713	963.9	.03	.06	.06	135	252 / 257	59	79	78	2
		1722	966.0	.99	1.5	1.5	325	256 / 253	59	82	80	5
		1724	966.9	.03	.06	.06	130	254 / 255	59	82	80	2
2		1727	—	.03	.06	.06	120	255 / 250	59	84	81	2
		1732	968.3	.03	.06	.06	105	254 / 252	58	84	82	2
		1736	969.2	.88	1.3	1.3	367	252 / 255	50	84	81	5
		1738	970.5	.03	.06	.06	110	255 / 253	50	84	81	2
		1745	972.7	.88	1.3	1.3	327	255 / 250	49	84	81	2
		1747	973.3	.03	.06	.06	120	252 / 247	49	84	81	2
3		1755	974.2	.03	.06	.06	108	255 / 248	49	84	82	2
		1801	975.1	.88	1.3	1.3	355	256 / 254	49	84	82	5
	5.21	1803	976.2	.03	.06	.06	112	255 / 251	45	84	82	2
		1810	977.5	.03	.06	.06	110	255 / 250	50	84	84	2
		1811	977.8	.88	1.3	1.3	349	252 / 255	50	85	84	5
4		1813	978.9	.03	.06	.06	120	252 / 253	50	82	82	2
1910		1820	980.1	.03	.06	.06	120	255 / 251	50	85	84	2
		1821	980.6	.88	1.3	1.3	370	255 / 254	50	85	82	5

6" .008

8" .001

Plant Name: BETHLEHEM STEEL **Test Date:** 8-11-94

Run Number: BI-M315-1 **Operator:** G Gay

Traverse Point Number	Sampling Time, (min.)	Clock Time (24-hour clock)	Gas Meter Reading (V_m) ft³	Velocity Head (ΔP_s) in. H_2O	Orifice Pres. Differential (ΔH) in. H_2O Desired	Orifice Pres. Differential (ΔH) in. H_2O Actual	Stack Temp. °F (T_s)	Probe Temp. / Filter Temp. °F	Impinger Temp. °F	Dry Gas Meter Temp. Inlet ($T_{m_{in}}$) °F	Dry Gas Meter Temp. Outlet ($T_{m_{out}}$) °F	Pump Vacuum In. Hg
B 4		1823	981.3	.03	.06	.06	120	255 / 253	51	84	81	2
B 5		1830	982.5	.03	.06	.06	117	254 / 252	51	83	80	2
		1838	983.8	.88	1.3	1.3	340	253 / 255	53	83	80	5
		1840	985.2	.03	.06	.06	112	254 / 255	54	83	80	2
6		1847	986.3	.88	1.1	1.2	470	255 / 258	56	83	79	5
		1849	987.7	.03	.06	.06	117	252 / 255	52	82	79	2
7		1904	997.9	.03	.06	.06	103	255 / 258	54	82	78	2
7		1906	998.2	1.2	1.6	1.6	408	254 / 255	54	82	78	5
		1908	999.5	.03	.06	.06	105	255 / 253	54	82	78	2
		1916	000.1	1.2	1.6	1.6	418	249 / 256	53	80	78	5
		1918	002.2	.03	.06	.06	120	250 / 253	50	80	78	2
8		1923	—	03	06	06	104	252 / 255	47	80	78	2
		1931	008.8	1.2	1.7	1.7	350	253 / 255	47	80	77	5
		1933	010.2	.03	06	.06	122	255 / 252	48	80	77	2
9		1940	011.4	03	.06	.06	104	250 / 255	49	80	77	2
		1941	011.5	1.2	1.9	1.9	307	252 / 255	50	80	77	5
		1943	013.3	03	06	.06	106	255 / 254	51	79	76	2
		1949	014.1	1.2	1.9	1.9	359	256 / 258	51	78	76	5
		1951	015.9	.03	.06	.06	120	250 / 249	51	78	76	2
10		1957	016.0	03	.06	06	106	255 / 251	51	78	76	2
		2008	018.7	.99	1.4	1.4	370	256 / 255	48	77	75	5
		2010	020.4	.03	.06	.06	116	252 / 250	48	77	75	2
		2016	021.009	1.00	1.4	1.4	360	252 / 250	48	77	75	
		2020	022.000					/				

021.009

PACIFIC ENVIRONMENTAL SERVICES, INC

4700 Duke Drive, Suite 150
Mason, Ohio 45040
513.398.2556 FAX: 513.398.3342

Sample Train Recovery Data

Plant: EPA Coke Bethlehem Steel Chesterton, IN Date: 8/11/98

Sampling Location: Baghouse Inlet

Sample Recovery Person: RK / RD Field Team Leader: DS

Sampling Method Type: M 315

Run Number: B – I – M315-1 Impinger Train ID: N-6

Job Number: S506.000

Comments: Filter change & sort change due to heavy loading and ~~rising~~ rising vacuum

Front Half Data

Filter No.: 080798-05 Filter Media Type: Treated Glass

Filter Description: heavy loading, black particulate

Filter No.: 080798-0 Filter Media Type: Treated Glass

Filter Description: heavy loading, black

Back Half Data

Impinger Purge-

Start Time: — Flow Rate: — Stop Time: — Purge Gas: —

	Impinger 1 HPLC	Impinger 2 HPLC	Impinger 3
Contents:	~~H_2SO_4/H_2O_2~~	~~H_2SO_4/H_2O_2~~	Empty
Final Volume: (~~ml~~) g	661.3	626.9	613.5
Initial Volume: (~~ml~~) g	619.9	~~722.5~~ 626.0	612.0
Net Volume: (~~ml~~) g	41.4	0.9	1.5

	Impinger 4	Impinger 5	Silica Gel
Contents:	—	—	Imp. 4
Final Volume: (~~ml~~) g	—	—	(g): 855.6
Initial Volume: (~~ml~~) g	—	—	(g): 832.8
Net Volume: (~~ml~~) g	—	—	(g): 22.8

Total Moisture Collected (~~ml~~ g): 66.6 ✓

Description of Impinger catch: clear ✓

12

FIELD DATA SHEET

K = 2.25

Plant: Bethlehem Steel
Sampling Location: Inlet
Run Number: BIn315-2 Date: 8-12-98
Pretest Leak Rate: .007 cfm @ 15 in. Hg.
Pretest Leak Check: Pitot: ✓ Orsat: ✓

Sample Type: M315 Operator: [illegible]
Pbar: 29.8 Ps: -2.3
CO2: .5 O2: 20.5
Probe Length/Type: 10' Glass Pitot #: R020
Stack Diameter: 114 As: 70.88

Nozzle ID: .215 Thermocouple #: RP20
Assumed Bws: 5 Filter #: 080798-04
Meter Box #: 1 Y: 1.012 ΔH@: 1.954
Post-Test Leak Rate: .015 cfm @ 5 in. Hg.
Post-Test Leak Check: Pitot: ✓ Orsat: —

Traverse Point Number	Sampling Time (min)	Clock Time (24-hour clock)	Gas Meter Reading (Vm) ft³	Velocity Head (Δp) in H2O	Orifice Pressure Differential (ΔH) in H2O Desired	Actual	Stack Temp. (Ts)	Temperature °F Probe	Filter	Impinger Temp. °F	Dry Gas Meter Temp. Inlet (Tm in °F)	Outlet (Tm out °F)	Pump Vacuum (in. Hg)
B 1	0	927	023.672										
				.002	.006	.006	135	258	255	67	74	74	2
		933	025.0	1.1	1.5	1.5	387	255	254	63	74	74	5
		935	026.5	.003	.006	.006	138	255	252	55	75	74	2
		943	028.0	1.1	1.5	1.5	372	254	252	54	76	75	5
B 2	24	945	029.2	.003	.006	.006	142	254	253	54	76	75	2
		954	030.5	1.1	1.5	1.5	374	255	250	59	76	75	5
		956	031.7	.003	.006	.006	147	256	251	55	78	77	2
		1004	033.0	1.1	1.5	1.5	361	255	251	56	82	78	5
		1006	034.2	.003	.009	.009	138	255	256	57	83	79	2
3		1012	035.2	.003	.009	.009	134	253	254	58	84	80	2
3		1014	035.7	1.1	1.5	1.5	358	255	254	58	84	80	5
		1016	036.6	.003	.009	.009	~~355~~ 143	252	253	58	84	81	2
		1025	037.1	.003	.009	.009	128	253	254	57	86	82	2
		1027	038.6	1.1	1.5	1.5	359	253	255	56	86	82	5
		1029	040.1	.003	.009	.009	119	254	255	56	86	82	2
4		1036	041.2	.003	.009	.009	118	257	254	55	87	84	2
		1040	042.0	1.1	1.3	1.3	519	257	252	53	87	83	5
		1047	043.2	.003	.009	.009	137	257	254	50	87	84	2
		1049	044.6	.003	.009	.009	134	258	256	51	87	84	2
		1053	045.5	1.1	1.5	1.5	445	258	256	51	88	84	2
		1055	046.7	.003	.009	.009	141	255	255	54	87	84	2
5		1100	048.0	.003	.009	.009	135	254	255	54	87	84	2
		1106	049.2	.003	.009	.009	118	255	253	54	86	84	2
		1114	050.7	1.1	1.5	1.5	334	257	255	55	85	83	5
		1116	051.8	.003	.009	.009	117	256	255	55	85	83	2
6		1124		1.1	1.5	1.5	342	256	257	55	85	83	5

ΔVm= 123.572 $\sqrt{\Delta p}$= _____ $\overline{\Delta H}$= _____ $\overline{Ts}$= _____ $\overline{Tm}$= 80

#2 080798-19 Filter

Plant Name: BETHLAM STEEL **Test Date:** 9-12-98

Run Number: B1 M315-2 **Operator:** GGOK

Traverse Point Number	Sampling Time, (min.)	Clock Time (24-hour clock)	Gas Meter Reading (V_m) ft³	Velocity Head (ΔP_s) in. H_2O	Orifice Pres. Differential (ΔH) in. H_2O Desired	Orifice Pres. Differential (ΔH) in. H_2O Actual	Stack Temp. °F (T_s)	Probe Temp. / Filter Temp. °F	Impinger Temp. °F	Dry Gas Meter Temp. Inlet ($T_{m_{in}}$) °F	Dry Gas Meter Temp. Outlet ($T_{m_{out}}$) °F	Pump Vacuum In. Hg
6		1126	054.6	.003	.009	.009	133	258 / 257	53	85	83	2
		1135	056.6	.99	1.5	1.5	343	225 / 251	58	81	82	5
		1137	057.9	.003	.009	.009	140	225 / 258	53	84	82	2
570		1146	059.651					/		~~77~~	~~78~~	
	12	1210	059.709	.003	.009	.009	107	224 / 253	68	77	77	2
		1212	060.4	.99	1.5	1.5	371	233 / 251	57	78	78	2
7		1214	—	.003	.009	.009	371	225 / 251	56	78	78	5
		1220	062.7	.003	.009	.009	132	225 / 230	58	78	78	2
		1226	063.8	.003	.009	.009	122	226 / 230	58	78	78	2
		1233	065.1	.003	.009	.009	117	224 / 233	57	77	78	2
		1234	065.3	.99	1.5	1.5	320	224 / 232	58	79	77	5
		1236	066.4	.003	.009	.009	132	225 / 230	57	79	77	2
8		1238	066.7	.003	.009	.009	130	224 / 229	56	80	78	2
		1247	068.3	.82	1.2	1.2	310	225 / 234	56	80	77	5
		1249	069.8	.003	.009	.009	129	225 / 232	49	81	78	2
		1258	071.6	.82	1.2	1.2	377	227 / 230	48	81	78	5
		1300	072.9	.03	.009	.009	152	227 / 238	47	82	78	2
9		1309	074.7	.82	1.2	1.2	357	225 / 233	50	81	78	5
		1311	075.5	.03	.009	.009	127	224 / 232	48	81	78	2
		1320	077.2	.99	1.5	1.5	375	225 / 234	50	82	78	5
		1322	078.5	.03	.009	.009	127	225 / 233	47	82	78	2
		1329	079.8	.03	.009	.009	125	225 / 234	52	82	78	2
10		1333	080.8	.03	.009	.009	119	226 / 235	52	82	78	2
		1341	082.2	.03	.009	.009	111	225 / 230	55	82	78	2

.002

Plant Name: Bethlehem Steel **Test Date:** 8-12-98

Run Number: B1 M315-2 **Operator:** Gloss

#2 FILTER 080798-1

Traverse Point Number	Sampling Time, (min.)	Clock Time (24-hour clock)	Gas Meter Reading (V_m) ft³	Velocity Head (ΔP_s) in. H_2O	Orifice Pres. Differential (ΔH) in. H_2O Desired	Orifice Pres. Differential (ΔH) in. H_2O Actual	Stack Temp. °F (T_s)	Probe Temp. / Filter Temp. °F	Impinger Temp. °F	Dry Gas Meter Temp. Inlet ($T_{m_{in}}$) °F	Dry Gas Meter Temp. Outlet ($T_{m_{out}}$) °F	Pump Vacuum In. Hg
		1343	082.5	.99	1.5	1.5	310	225 / 230	55	82	78	5
	4 Hrs	1345	083.7	.03	.009	.009	120	225 / 230	55	80	78	2
- 0.399			084.722					/				
								/				
A 1		1530	085.121	.03	.009	.009	106	230 / 232	62	76	75	2
		1541	—	.82	1.2	12	330	223 / 230	60	76	75	5
		1543	087.5	.03	.009	.009	112	225 / 230	60	76	75	2
		1549	088.7	.03	009	.009	106	225 / 230	58	77	75	2
		1551	089.0	.82	1.2	1.2	333	225 / 229	52	77	75	5
		1552	090.0	.03	.009	.009	127	224 / 228	52	77	75	2
A.2		1559	091.3	.03	.009	.009	109	225 / 230	53	78	76	2
		1602	091.8	.88	1.3	1.3	321	224 / 229	51	78	76	5
		1604	092.9	.03	.009	.009	110	225 / 230	51	78	76	2
		1614	094.9	.88	1.3	1.3	310	226 / 233	54	80	77	5
		1616	095.9	.03	.009	.009	116	225 / 230	54	81	78	2
A-3		1623	097.1	.03	.009	.009	113	224 / 229	55	81	77	2
		1624	097.4	.88	1.2	12	307	225 / 228	54	81	77	5
		1626	098.5	.03	.009	.009	122	224 / 230	54	82	77	2
		1634	100.0	.03	009	.009	109	223 / 233	55	82	77	2
		1635	100.3	.88	1.2	1.2	299	223 / 230	55	82	77	5
		1637	101.3	.03	.009	.009	115	224 / 229	55	82	77	2
		1643	102.6	.03	.009	.009	110	225 / 230	58	82	79	2
		1644	102.8	.82	1.2	1.2	318	225 / 230	55	82	79	5
		1646	103.8	.03	.009	.009	121	224 / 229	54	82	79	2

5'' .003

10'' .003

Plant Name: Bethlehem Steel **Test Date:** 8-12-98

Run Number: BI-315-2 **Operator:** G Gay

Traverse Point Number	Sampling Time, (min.)	Clock Time (24-hour clock)	Gas Meter Reading (V_m) ft³	Velocity Head (ΔP_s) in. H_2O	Orifice Pres. Differential (ΔH) in. H_2O Desired	Orifice Pres. Differential (ΔH) in. H_2O Actual	Stack Temp. °F (T_s)	Probe Temp. / Filter Temp. °F	Impinger Temp. °F	Dry Gas Meter Temp. Inlet ($T_{m_{in}}$) °F	Dry Gas Meter Temp. Outlet ($T_{m_{out}}$) °F	Pump Vacuum In. Hg
A-4	1647	1647	104.0	.003	.009	.009	119	224 / 230	54	82	79	2
		1800	106.7	.003	.009	.009	101	224 / 225	63	82	79	2
		1710	108.6	.003	.009	.009	98	225 / 232	60	83	77	2
		1712	108.9	1.2	1.7	1.7	399	224 / 230	60	82	80	5
A-5		1714	110.0	.003	.009	.009	110	223 / 230	60	82	80	2
		1722	112.3	1.2	1.7	1.7	375	223 / 232	60	82	80	5
		1724	113.3	.003	.009	.009	115	223 / 230	60	82	80	2
		1732	114.9	1.2	1.7	1.7	330	224 / 233	60	85	81	5
		1734	116.1	.003	.009	.009	117	224 / 230	60	85	81	2
A 6		1738	117.2	.003	.009	.009	106	224 / 230	60	85	80	2
		1742	118.2	.94	1.5	1.5	315	225 / 230	61	85	80	5
		1744	119.6	.003	.009	.009	118	224 / 230	57	85	80	2
		1750	120.9	.003	.009	.009	107	225 / 230	57	84	80	2
		1751	121.0	.94	1.5	1.5	346	225 / 227	57	84	80	5
		1753	122.0	.003	.009	.009	129	225 / 230	51	84	80	2
A 7		1802	123.7	.85	1.3	1.3	327	224 / 233	57	83	80	5
		1804	124.8	.003	.009	.009	133	225 / 230	51	83	80	2
		1812	126.1	.85	1.3	1.3	350	225 / 232	57	83	80	5
		1814	127.1	.003	.009	.009	152	225 / 230	51	83	80	2
A 8		1826	129.1	.003	.009	.009	112	225 / 231	52	82	79	2
		1834	130.9	1.2	1.7	1.7	367	225 / 234	54	82	79	5
		1836	131.9	.003	.009	.009	114	225 / 237	51	82	80	2
		1843	133.3	.003	.009	.009	111	225 / 233	55	81	77	2
		1845	133.8	1.2	1.7	1.7	384	225 / 230	54	81	77	5

Plant Name: Bethlehem Steel **Test Date:** 8-12-98

Run Number: BI-M315-2 **Operator:** GGM

Traverse Point Number	Sampling Time, (min.)	Clock Time (24-hour clock)	Gas Meter Reading (V_m) ft³	Velocity Head (ΔP_s) in. H_2O	Orifice Pres. Differential (ΔH) in. H_2O Desired	Orifice Actual	Stack Temp. °F (T_s)	Probe Temp. / Filter Temp. °F	Impinger Temp. °F	Dry Gas Meter Temp. Inlet (T_{in}) °F	Outlet (T_{out}) °F	Pump Vacuum In. Hg
A9	~~1847~~	1847	134.8	.003	.009	.009	132	225 / 230	54	81	77	2
		1853	136.2	.003	.009	.009	113	224 / 231	54	81	77	2
		1855	136.5	1.2	1.7	1.7	411	225 / 231	52	81	77	5
		1857	137.7	.003	.009	.009	117	225 / 231	53	81	77	2
		1903	139.0	.003	.009	.009	114	228 / 230	54	81	77	2
		1905	139.3	1.2	1.7	1.7	374	225 / 230	54	81	77	5
		1907	140.4	.003	.009	.009	135	225 / 229	52	81	77	2
A10		1910	140.8	.003	.009	.009	127	224 / 230	54	81	77	2
		1915	141.9	9.2	1.3	1.3	356	225 / 232	54	81	77	5
		1917	143.2	.003	.009	.009	138	225 / 230	53	81	77	2
		1923	144.5	.003	.009	.009	119	224 / 230	54	81	77	2
		1930	145.8	.003	.009	.009	107	225 / 230	54	81	77	2
	8	1941	147.643	12	17	17	—	225 / 230	54	81	77	2

PACIFIC ENVIRONMENTAL SERVICES, INC

4700 Duke Drive, Suite 150
Mason, Ohio 45040
513.398.2556 FAX: 513.398.3342

Sample Train Recovery Data

Plant: Bethlehem Steel - EPA Coke - Chesterton, Ind. Date: 8/13/98

Sampling Location: Baghouse Inlet

Sample Recovery Person: RL / BD Field Team Leader: D. Schlichtel

Sampling Method Type: EPA 315

Run Number: B-I-315-2 Impinger Train ID: N-3

Job Number: 5506.000

Comments: Two filters used due to heavy loading

Front Half Data

Filter No.: 080798-~~16~~ RWD2 04 Filter Media Type: Glass fiber filter - tared

Filter Description: Black, heavy

Filter No.: 080798-19 Filter Media Type: Tared glass fiber

Filter Description: Black heavy loading

Back Half Data

Impinger Purge-

Start Time:_____ Flow Rate:_____ Stop Time:_____ Purge Gas:_____

	Impinger 1	Impinger 2	Impinger 3
Contents:	HPLC H_2O	HPLC-H_2O	Empty
Final Volume: (ml)	646.7	632.3	481.0
Initial Volume: (ml)	610.7	629.9	479.5
Net Volume: (ml)	36.0	2.4	1.5

	Impinger 4	Impinger 5	Silica Gel
Contents:	—	—	Sil Gel
Final Volume: (ml)	—	—	(g): 835.9
Initial Volume: (ml)	—	—	(g): 814.9
Net Volume: (ml)	—	—	(g): 21.0

Total Moisture Collected (ml): 60.9 ✓

Description of Impinger catch: Clear

FIELD DATA SHEET

K = 2.25

Plant: Bethlehem Steel
Sampling Location: Inlet Baghouse
Run Number: BI 315-3 Date: 8/13-98
Pretest Leak Rate: .005 cfm @ 15 in. Hg.
Pretest Leak Check: Pitot: ✓ Orsat: ✓

Sample Type: m315 Operator: Gary
Pbar: 29.8 Ps: -2.2
CO2: .5 O2: 20.4
Probe Length/Type: 10' Glass Pitot #: RD20
Stack Diameter: 114 As: 70.88

Nozzle ID: .215 Thermocouple #: RD20
Assumed Bws: 5 Filter #: 086798-15
Meter Box #: 1 Y: 1.012 ΔH@: 1.958
Post-Test Leak Rate: .006 cfm @ 4 in. Hg.
Post-Test Leak Check: Pitot: ✓ Orsat: ✓

Traverse Point Number	Sampling Time (min)	Clock Time (24-hour clock)	Gas Meter Reading (Vm) ft³	Velocity Head (Δp) in H2O	Orifice Pressure Differential (ΔH) in H2O Desired	Orifice Pressure Differential (ΔH) in H2O Actual	Stack Temp. (Ts)	Temperature °F Probe	Temperature °F Filter	Impinger Temp. °F	Dry Gas Meter Temp. Inlet (Tm in °F)	Dry Gas Meter Temp. Outlet (Tm out °F)	Pump Vacuum (in. Hg)
A1		842	149.890										
				.003	.009	.009	136	225	230	58	70	69	2
		843	150.8	.95	1.4	1.4	322	224	229	51	70	69	4
		845	151.8	.003	.009	.009	118	225	230	48	70	69	2
		855	153.2	.95	1.4	1.4	342	225	227	51	70	69	4
		857	154.2	.003	.009	.009	143	224	228	50	70	69	2
A-2		905	156.0	.003	.009	.009	115	223	229	53	75	72	2
		907	156.5	1.2	1.6	1.6	418	224	230	55	75	72	4
		909	157.4	.003	.009	.009	146	225	228	49	76	72	2
		922	160.0	1.2	1.6	1.6	330	226	225	56	78	78	4
		924	161.1	.003	.009	.009	122	223	230	52	80	76	2
A-3		930	162.0	.003	.009	.009	112	225	231	54	81	77	2
		931	162.3	1.0	1.4	1.4	378	225	231	55	82	77	4
		933	163.3	.003	.009	.009	168	226	231	54	82	77	2
		942	165.4	1.0	1.4	1.4	382	226	229	56	83	78	4
		944	166.4	.003	.009	.009	118	225	230	56	84	78	2
		950	167.7	.003	.009	.009	114	225	229	56	84	78	2
		952	168.2	.82	1.2	1.2	347	225	227	53	85	79	4
A-4		954	169.2	.003	.009	.009	149	225	230	53	86	81	2
		1000	170.5	.003	.009	.009	114	224	229	56	86	82	2
		1001	170.7	.82	1.2	1.2	318	225	229	56	86	82	4
		1007	171.7	.003	.009	.009	147	223	229	56	86	82	2
		1008	172.8	.003	.009	.009	118	225	228	57	87	83	2
		1012	173.6	.82	1.2	1.2	322	225	231	56	87	83	4
		1014	174.6	.003	.009	.009	152	225	230	56	88	84	2
A5		1018	175.4	.003	.009	.009	126	227	231	57	88	84	2
		1023	176.4	.003	.009	.009	114	225	230	57	88	84	2

ΔVm= 121.955 $\overline{\sqrt{\Delta p}}$= _____ $\overline{\Delta H}$= _____ $\overline{Ts}$= _____ $\overline{Tm}$= 85

086798-1

Plant Name: BETHLEHEM STEEL **Test Date:** 8-13-98

Run Number: BI-M315-3 **Operator:** GGM

Traverse Point Number	Sampling Time, (min.)	Clock Time (24-hour clock)	Gas Meter Reading (V_m) ft³	Velocity Head (ΔP_s) in. H_2O	Orifice Pres. Differential (ΔH) in. H_2O Desired	Orifice Pres. Differential (ΔH) in. H_2O Actual	Stack Temp. °F (T_s)	Probe Temp. / Filter Temp. °F	Impinger Temp. °F	Dry Gas Meter Temp. Inlet ($T_{m_{in}}$) °F	Dry Gas Meter Temp. Outlet ($T_{m_{out}}$) °F	Pump Vacuum In. Hg
A5		1034	178.1	.003	.009	.009	108	225 / 230	56	88	84	2
		1036	178.6	.86	1.3	1.3	334	225 / 230	57	88	86	4
		1038	179.6	.003	.009	.009	178	228 / 232	58	89	86	2
A-6		1042	180.4	.003	.009	.009	116	228 / 230	58	89	86	2
		1047	181.3	.92	1.4	1.4	342	226 / 231	59	89	86	4
		1049	182.4	.003	.009	.009	187	225 / 230	58	89	86	2
		1058	183.9	.92	1.4	1.4	433	228 / 231	58	90	87	4
		1100	185.0	.003	.009	.009	178	229 / 230	57	91	88	2
A7		1106	186.2	.003	.009	.009	127	230 / 229	58	91	88	2
		1108	186.8	.98	1.4	1.4	348	227 / 229	57	91	88	4
		1110	187.9	.003	.009	.009	176	228 / 230	56	91	88	2
		1117	189.3	.003	.009	.009	119	224 / 228	57	92	88	2
		1118	189.6	.98	1.4	1.4	402	225 / 229	55	92	88	4
		1120	190.8	.003	.009	.009	153	225 / 229	56	92	88	2
		1127	192.3	.003	.009	.009	133	223 / 230	57	91	89	2
A8		1130	192.8	.003	.009	.009	127	224 / 229	57	91	89	2
		1138	194.5	.95	1.4	1.4	347	225 / 230	57	91	89	4
		1140	195.6	.003	.009	.009	132	222 / 229	56	90	89	2
		1147	197.3	.95	1.4	1.4	353	224 / 228	57	90	89	4
		1149	198.4	.003	.009	.009	186	224 / 228	55	90	89	2
A9		1154	199.4	.003	.009	.009	126	225 / 230	56	90	89	2
		1158	200.2	.88	1.2	1.2	353	225 / 229	55	90	87	4
		1200	201.3	.003	.009	.009	149	224 / 227	54	90	88	2
		1207	202.8	.82	1.2	1.2	348	226 / 228	53	89	88	4

Plant Name: BETHLEHEM STEEL **Test Date:** 8-13-98

Run Number: BI M315-3 **Operator:** GGMK

Traverse Point Number	Sampling Time, (min.)	Clock Time (24-hour clock)	Gas Meter Reading (V_m) ft³	Velocity Head (ΔP_s) in. H_2O	Orifice Pres. Differential (ΔH) in. H_2O Desired	Orifice Pres. Differential (ΔH) in. H_2O Actual	Stack Temp. °F (T_s)	Probe Temp. / Filter Temp. °F	Impinger Temp. °F	Dry Gas Meter Temp. Inlet (T_{in}) °F	Dry Gas Meter Temp. Outlet (T_{out}) °F	Pump Vacuum In. Hg
A 9		1209	203.0	.003	~~.009~~	~~.009~~	157	226 / 228	54	87	88	2
A-10		1218	205.3	.003	.009	.009	118	225 / 228	55	89	88	2
		1227	207.3	.003	.009	.009	109	225 / 228	53	89	88	2
		1236	209.0	.88	1.3	1.3	310	228 / 228	53	88	87	4
		1238	210.2	.003	.009	.009	138	225 / 230	51	86	85	2
	4 Hrs	1242	211.336	.003	.009	.009	119	225 / 230	50	88	85	2
B-1		1333	211.431	.003	.009	.009	123	225 / 232	61	78	78	2
		1340	212.7	.92	1.3	1.3	347	226 / 231	57	78	78	4
		1347	213.8	.003	.009	.009	140	225 / 231	57	78	78	2
		1347	214.9	.003	.009	.009	125	226 / 232	59	78	78	2
		1350	215.6	.92	1.3	1.3	320	225 / 230	57	78	78	4
		1352	216.7	.003	.009	.009	167	227 / 231	57	80	78	2
B-2		1357	217.6	.003	.009	.009	176	225 / 230	58.	80	78	2
		1403	218.7	.92	1.3	1.3	362	226 / 229	56	80	78	4
		1405	219.7	.003	.009	.009	171	225 / 230	56	80	78	2
B-3		1421	222.8	.003	.009	.009	120	225 / 232	56	82	78	~~2~~ 2
		1422	223.9	.92	1.3	1.3	345	225 / 229	54	82	71	~~2~~ 4
		1424	226.9	.003	.009	.009	183	226 / 230	55	83	80	2
B-4		1445	227.9	.003	.009	.009	111	225 / 229	56	83	79	2
		1456	230.1	.003	.009	.009	105	226 / 233	57	84	81	2
		1503	231.3	.003	.009	.009	102	225 / 228	59	85	82	2
B-5		1509	232.5	.003	.009	.009	107	226 / 230	59	85	82	2
		1510	232.6	.88	1.4	1.4	310	225 / 231	56	85	88	4

- 0.095

6"
.001

.002
6"

Plant Name: BETHLEHEM STEEL **Test Date:** 8-13-98

Run Number: BF M315-3 **Operator:** GGN

Traverse Point Number	Sampling Time, (min.)	Clock Time (24-hour clock)	Gas Meter Reading (V_m) ft³	Velocity Head (ΔP_s) in. H_2O	Orifice Pres. Differential (ΔH) in. H_2O Desired	Orifice Pres. Differential (ΔH) in. H_2O Actual	Stack Temp. °F (T_s)	Probe Temp. / Filter Temp. °F	Impinger Temp. °F	Dry Gas Meter Temp. Inlet ($T_{m_{in}}$) °F	Dry Gas Meter Temp. Outlet ($T_{m_{out}}$) °F	Pump Vacuum In. Hg
B5	/	1512	233.6	.83	.009	.009	187	225 / 231	56	85	82	2
	/	1519	235.0	.88	1.4	1.4	315	224 / 230	57	85	82	4
	/	1521	236.1	.003	.009	.009	160	225 / 230	57	85	82	2
	/	1530	237.5	1.2	1.7	1.7	378	224 / 230	58	85	82	4
	/	1532	238.7	.003	.009	.009	171	225 / 230	51	85	82	2
B6	/	1533	238.9	.003	.009	.009	139	225 / 230	50	85	82	2
	/	1540	240.2	1.2	1.7	1.7	346	224 / 231	50	85	83	4
	/	1542	240.3	.003	.009	.009	175	224 / 230	49	86	83	2
	/	1550	242.9	1.2	1.7	1.7	410	225 / 230	52	86	83	4
	/	1552	244.1	.003	.009	.009	148	225 / 232	47	86	83	2
B7	/	1557	245.2	.003	.009	.009	122	225 / 233	57	86	83	2
	/	1600	245.8	1.2	1.7	1.7	340	225 / 231	52	86	83	4
	/	1607	247.0	.003	.009	.009	152	225 / 230	54	86	83	2
	/	1610	248.3	.92	1.4	1.4	315	226 / 230	51	86	83	4
	/	1612	249.7	.003	.009	.009	155	225 / 230	53	86	83	2
	/	1619	251.4	.92	1.4	1.4	312	226 / 230	53	87	83	4
B8	/	1621	252.5	.003	.009	.009	187	225 / 230	53	87	83	2
	/	1633	254.7	.003	.009	.009	113	225 / 233	58	87	84	2
	/	1636	255.3	.88	1.4	1.4	306	225 / 231	58	87	84	4
	/	1638	256.4	.003	.009	.009	217	225 / 230	52	87	84	2
	/	1643	258.1	.003	.009	.009	126	225 / 229	56	88	84	2
B9	/	1645	258.6	.003	.009	.009	115	225 / 230	56	88	84	2
	/	1647	259.4	.82	1.3	1.3	304	225 / 229	55	89	85	4
	/	1649	260.0	.003	.009	.009	163	226 / 230	53	89	85	2

Plant Name: Bethlehem Steel **Test Date:** 8-13-98

Run Number: BI-M315-3 **Operator:** G Gay

Traverse Point Number	Sampling Time, (min.)	Clock Time (24-hour clock)	Gas Meter Reading (V_m) ft³	Velocity Head (ΔP_s) in. H_2O	Orifice Pres. Differential (ΔH) in. H_2O Desired	Orifice Pres. Differential (ΔH) in. H_2O Actual	Stack Temp. °F (T_s)	Probe Temp. / Filter Temp. °F	Impinger Temp. °F	Dry Gas Meter Temp. Inlet ($T_{m_{in}}$) °F	Dry Gas Meter Temp. Outlet ($T_{m_{out}}$) °F	Pump Vacuum In. Hg
B9		1654	261.0	.003	.009	.009	119	225 / 229	54	89	85	2
		1703	262.7	.82	1.3	1.3	320	224 / 229	58	88	85	4
		1705	263.8	.003	.009	.009	178	225 / 230	53	88	85	2
B-10		1709	264.5	.003	.009	.009	125	225 / 231	57	88	85	2
		1712	265.2	.82	1.3	1.3	312	225 / 230	50	88	85	4
		1714	266.4	.003	.009	.009	151	224 / 229	51	88	85	2
		1720	267.7	.003	.009	.009	119	225 / 229	54	89	86	2
		1723	268.1	1.1	1.5	1.5	407	225 / 230	52	89	86	4
		1725	269.2	.003	.009	.009	144	223 / 230	53	89	86	2
		1736	271.940	.003	.009	.009	122	226 / 229	59	88	86	2

PACIFIC ENVIRONMENTAL SERVICES, INC

4700 Duke Drive, Suite 150
Mason, Ohio 45040
513.398.2556 FAX: 513.398.3342

Sample Train Recovery Data

Plant: Bethlehem Steel - EPA Coke - Chesterton, Indiana Date: 9/13/99
Sampling Location: Baghouse Inlet
Sample Recovery Person: RD/RK Field Team Leader: D. Schaffel
Sampling Method Type: EPA 315
Run Number: B-II-315-3 Impinger Train ID: N-6
Job Number: 5506.000

Comments: 2 filters used

Front Half Data

Filter No.: 080798-15 Filter Media Type: Tared Glass Fiber
Filter Description: Heavy black
Filter No.: 080798-11 Filter Media Type: Tared Glass Fiber
Filter Description: heavy black

Back Half Data

Impinger Purge-
Start Time: — Flow Rate: — Stop Time: — Purge Gas: —

	Impinger 1	Impinger 2	Impinger 3
Contents:	HPLC H_2O	HPLC H_2O	Empty
Final Volume: (ml)	651.3	630.0	613.3
Initial Volume: (ml)	621.1	630.4	614.6
Net Volume: (ml)	30.2	-0.4	-0.7

	Impinger 4	Impinger 5	Silica Gel
Contents:	—	—	Silica Gel
Final Volume: (ml)	—	—	(g): 844.0
Initial Volume: (ml)	—	—	(g): 822.2
Net Volume: (ml)	—	—	(g): 21.8

Total Moisture Collected (ml): 50.9 ✓
Description of Impinger catch: Clear

FIELD DATA SHEET

Plant: Bethlehem Steel
Sampling Location Baghouse Inlet
Run Number: B-I-315-FB Date: 08-14-98
Pretest Leak Rate: .002 cfm @ 15 in. Hg.
Pretest Leak Check: Pitot: N/A Orsat: —

Sample Type: 315 Operator: DDH
Pbar: 29.7 Ps: —
CO2: 0 O2: 20.9
Probe Length/Type: 5'/ST Pitot #: 4A
Stack Diameter: 114 As:

Nozzle ID: .215 Thermocouple #: 4A
Assumed Bws: 4 Filter #: 0802-98-(
Meter Box #: MB-1 Y: 1.012 ΔH@: 1.991
Post-Test Leak Rate: .002 cfm @ 15 in. Hg.
Post-Test Leak Check: Pitot: N/A Orsat: —

Traverse Point Number	Sampling Time (min)	Clock Time (24-hour clock)	Gas Meter Reading (Vm) ft³	Velocity Head (Δp) in H2O	Orifice Pressure Differential (ΔH) in H2O		Stack Temp. (Ts)	Temperature °F		Impinger Temp. °F	Dry Gas Meter Temp.		Pump Vacuum (in. Hg)	
					Desired	Actual		Probe	Filter		Inlet (Tm in °F)	Outlet (Tm out °F)		
	0	1645	272.097											
	15	1700	273.255	N/A	N/A	N/A	N/A	250	250	80	N/A	N/A		15"
	30	1715	273.325	N/A	↓	↓	↓	250	250	80	↓	↓		0.002
	45	1730	273.475	N/A	↓	↓	↓	245	245	80	↓	↓		

ΔVm= _____ $\overline{\sqrt{\Delta p}}$= _____ $\overline{\Delta H}$= _____ $\overline{Ts}$= _____ $\overline{Tm}$= _____

PACIFIC ENVIRONMENTAL SERVICES, INC

4700 Duke Drive, Suite 150
Mason, Ohio 45040
513.398.2556 FAX: 513.398.3342

Sample Train Recovery Data

Plant: EPA Coke Bethlehem Steel Date: 8/14/98

Sampling Location: ~~Under fire~~ RWD Baghouse Inlet

Sample Recovery Person: RWD 2 Field Team Leader: DS

Sampling Method Type: M315

Run Number: SS06.000 Impinger Train ID: N-2

Job Number: B-~~[illegible]~~-315-FB
I RWD 2

Comments: —

Front Half Data

Filter No.: 080798-2 Filter Media Type: Treated glass

Filter Description: no particulate

Filter No.: — Filter Media Type: —

Filter Description: —

Back Half Data

Impinger Purge- —

Start Time: _____ Flow Rate: _____ Stop Time: _____ Purge Gas: _____

	Impinger 1	Impinger 2	Impinger 3
Contents:	HPLC	HPLC	Empty
Final Volume: (ml)	589.4	717.5	575.2
Initial Volume: (ml)	589.4	717.5	575.1
Net Volume: (ml)	0.0	0.0	0.1

	Impinger 4	Impinger 5	Silica Gel
Contents:	—	—	Sil Gel
Final Volume: (ml)	—	—	(g): 706.2
Initial Volume: (ml)	—	—	(g): 706.2
Net Volume: (ml)	—	—	(g): 0.0

Total Moisture Collected (ml): 0.1

Description of Impinger catch: Clear

FIELD DATA SHEET

Plant: Bethlehem Steel
Sampling Location: Baghouse Inlet
Run Number: B-I-429-1 Date: 08-11-98
Pretest Leak Rate: 15" cfm @ .011 in. Hg.
Pretest Leak Check: Pitot: ✓ Orsat: —

Sample Type: 429 Operator: DDH
Pbar: 29.7 Ps: -2.2
CO2: 0 O2: 20.9
Probe Length/Type: 11'/S Type Pitot #:
Stack Diameter: 114" As: 10,207

Nozzle ID: .217 Thermocouple #:
Assumed Bws: 4.5 Filter #: Unnumbered/DF
Meter Box #: MB-6 Y: 1.005 ΔH@: 1.778
Post-Test Leak Rate: .012 cfm @ 15 in. Hg.
Post-Test Leak Check: Pitot: ✓ Orsat: —

Traverse Point Number	Sampling Time (min)	Clock Time (24-hour clock)	Gas Meter Reading (Vm) ft³	Velocity Head (Δp) in H2O	Orifice Pressure Differential (ΔH) in H2O Desired	Orifice Pressure Differential (ΔH) in H2O Actual	Stack Temp. (Ts)	Temperature °F Probe	Temperature °F Filter	Impinger Temp. °F	Dry Gas Meter Temp. Inlet (Tm in °F)	Dry Gas Meter Temp. Outlet (Tm out °F)	Pump Vacuum (in. Hg)	XAD
B10	0	1030	435.165											
Push 2½	5	1035	436.920	.65	1.36	1.36	108	250	250	48	76	75	7	49
	17½	1052½	438.890	.65	.03	.03	141	260	260	49	80	80	2	49
	19½	1054½	440.380	0.80	1.60	1.60	119	260	260	48	77	78	7	49
(21) 9	32½	1104½	441.390	.02	.04	.04	119	260	260	49	78	78	2	45
	34½	1106½	442.791	.80	1.35	1.35	230	255	250	50	75	76	7	48
	42½	1114½	443.000	.02	.04	.04	116	250	250	48	76	76	2	48
	44½	1116½	444.980	.90	1.50	1.50	235	250	250	49	77	76	7	49
(54) 8	52½	1124½	445.910	.02	.04	.04	116	250	255	50	76	76	2	50
	54½	1126½	447.900	.90	1.50	1.50	233	250	250	51	75	75	7	51
	63	1135	448.600	.02	.04	.04	117	250	250	50	75	75	2	51
	65	1137	449.750	.93	1.55	1.55	235	250	255	50	74	75	7	50
	74	1146	450.760	.02	.04	.04	116	250	250	50	75	75	2	50
	76	1148	451.800	.90	1.50	1.50	233	250	255	50	75	76	7	51
(81) 7	90½	1200½	453.500	.02	.04	.04	117	250	250	51	76	76	2	50
	92½	1204½	455.210	.93	1.55	1.55	235	250	250	51	76	75	7	50
	100	1212	455.885	.02	.04	.04	118	250	250	51	76	76	2	49
	102	1214	457.055	.98	1.64	1.64	235	255	260	52	77	76	7	48
(108) 6	111½	1223½	457.800	.02	.04	.04	118	260	260	51	77	76	2	47
	113½	1225½	459.010	.93	1.56	1.56	233	255	255	50	77	77	7	47
	126	1238	460.400	.02	.04	.04	115	250	252	49	77	77	2	46
	128	1240	461.300	.90	1.49	1.49	243	253	254	52	78	77	7	49
(135) 5	143	1257	463.010	.02	.04	.04	115	251	254	51	78	77	2	49
	149	1259	464.410	.93	1.56	1.59	322	250	250	50	78	77	7	48
	156	1308	465.050	.02	.04	.04	118	251	252	50	78	78	2	52
	158	1310	466.125	.98	1.45	1.45	328	255	250	52	78	78	7	51
(162) 4	175	1327	467.900	.02	.04	.04	117	250	251	51	78	78	2	51

ΔVm= 88.661 √Δp= ____ ΔH= ____ Ts= ____ Tm= 76

Plant Name: Bethlehem Steel **Test Date:** 8-11-98

Run Number: B-I-429-1 **Operator:** Dennis D. Holeschuk

	Traverse Point Number	Sampling Time, (min.)	Clock Time (24-hour clock)	Gas Meter Reading (V_m) ft³	Velocity Head (ΔP_s) in. H_2O	Orifice Pres. Differential (ΔH) in. H_2O Desired	Orifice Pres. Differential (ΔH) in. H_2O Actual	Stack Temp. °F (T_s)	Probe Temp. / Filter Temp. °F	Impinger Temp. °F	Dry Gas Meter Temp. Inlet ($T_{m_{in}}$) °F	Dry Gas Meter Temp. Outlet ($T_{m_{out}}$) °F	Pump Vacuum In. Hg	XAD
		177	1329	468.910	.98	1.45	1.45	328	255 / 250	52	78	78	7	48
		184½	1336½	469.723	.02	.04	.04	118	253 / 250	51	78	78	2	49
		186½	1338½	470.880	.97	1.44	1.44	326	252 / 251	50	79	78	7	50
(189)	3	194	1346	471.600	.02	.04	.04	117	251 / 251	49	78	78	2	50
		196	1348	472.793	.99	1.47	1.47	325	253 / 254	50	78	77	7	51
		202	1353	473.590	.02	.04	.04	116	250 / 250	51	78	77	2	51
		204	1355	474.681	.97	1.44	1.44	325	251 / 251	52	78	77	7	51
		212	1404	475.280	.02	.04	.04	117	250 / 251	51	78	77	2	50
		214	1406	476.301	.97	1.44	1.44	325	252 / 252	51	78	77	7	50
(216)	2	222½	1414½	477.300	.02	.04	.04	116	253 / 253	51	78	78	2	50
		224½	1416½	478.512	.82	1.22	1.22	321	252 / 251	50	78	78	8	50
		232½	1424½	479.300	.02	.04	.04	117	253 / 252	53	78	76	2	51
restart 1659		234½	1426½	480.330	.82	1.22	1.22	320	251 / 252	51	77	78	12	50
(243)	A 1	255	1447	482.405	.02	.04	.04	118	252 / 253	52	78	79	2	52
		257	1701	486.600	.80	1.18	1.18	320	253 / 253	51	76	76	8	47
		265½	1709½	487.785	.02	.04	.04	118	253 / 254	57	77	77	2	48
		267½	1711½	489.175	.95	1.40	1.40	327	252 / 252	56	76	76	6	48
		276	1720	490.150	.02	.04	.04	112	251 / 252	57	76	77	2	48
		278	1722	491.320	.96	1.49	1.49	289	250 / 250	57	76	76	6	48
(27)	2	290	1734	493.050	.02	.04	.04	111	253 / 254	57	77	77	2	49
		292	1736	494.200	.99	1.52	1.52	298	252 / 253	56	77	76	6	49
		300	1744	495.320	.02	.04	.04	113	253 / 252	56	77	76	8	53
27 min apart (309)		302	1746	497.025	.97	1.46	1.46	311	254 / 253	50	76	76	6	50
18 min	3	315	1759	498.709	.02	.04	.04	114	252 / 253	51	76	76	2	49

-0.12 (482.400 / 482.520) 1st Port - Post Leak Check / 2nd Port Pre Leak Check (482.520 / 485.904) - 3.384

Restarted the 2nd port at 1659

Plant Name: Bethlehem Steel **Test Date:** 8-11-98

Run Number: B-I-429-1 **Operator:** Dennis D. Holzschuh

	Traverse Point Number	Sampling Time, (min.)	Clock Time (24-hour clock)	Gas Meter Reading (V_m) ft³	Velocity Head (ΔP_s) in. H_2O	Orifice Pres. Differential (ΔH) in. H_2O Desired	Orifice Pres. Differential (ΔH) in. H_2O Actual	Stack Temp. °F (T_s)	Probe Temp. / Filter Temp. °F	Impinger Temp. °F	Dry Gas Meter Temp. Inlet ($T_{m_{in}}$) °F	Dry Gas Meter Temp. Outlet ($T_{m_{out}}$) °F	Pump Vacuum In. Hg	XAD
		317	1801	499.802	.97	1.46	1.46	311	254 / 255	48	76	76	6	49
		325	1803	500.560	.02	.04	.04	115	254 / 255	49	77	76	[illegible]	49
327	4	327	1810	501.802	.99	1.52	1.52	298	253 / 254	49	77	76	6	51
		335	1818	502.820	.02	.04	.04	115	253 / 252	49	77	76	[illegible]	52
		337	1820	503.915	.99	1.52	1.52	298	253 / 252	48	77	76	6	51
345	5	352	1835	506.400	.02	.04	.04	112	254 / 253	49	76	76	[illegible]	50
		354	1837	507.690	.95	1.40	1.40	327	254 / 252	50	76	76	6	51
363		361	1844	508.48	.02	.04	.04	113	252 / 251	49	76	76	2	50
	6	363	1846	509.535	.95	1.40	1.40	327	254 / 252	50	76	76	6	51
		380	1903	512.000	.02	.04	.04	114	251 / 251	46	76	76	2	49
381	7	382	1905	513.200	.99	1.52	1.52	298	252 / 253	48	77	76	6	51
		390	1913	514.160	.02	.04	.04	115	252 / 251	49	77	76	[illegible]	52
		392	1915	515.700	.97	1.46	1.46	311	255 / 251	48	76 ~~77~~	76	6	50
399	8	405	1928	517.255	.02	.04	.04	112	255 / 253	46	76	76	2	48
		407	1930	518.640	.97	1.46	1.46	313	252 / 252	47	77	76	[illegible]	49
		414	1937	519.650	.02	.04	.04	113	251 / 251	48	77	76	2	48
		416	1939	520.900	.90	1.41	1.41	283	251 / 251	52	77	77	6	53
417	9	423	1946	521.930	.02	.04	.04	122	253 / 254	51	77	77	2	51
		425	1948	523.034	.95	1.48	1.48	285	252 / 254	50	77	77	6	50
435	10	442	2005	525.410	.02	.04	.04	114	250 / 250	49	77	77	2	51
		444	2007	526.340	.95	1.48	1.48	285	252 / 252	50	77	77	2	50
		453	2016	527.330	.02	.04	.04	114	252 / 252	50	77	77	2	50
453 END			/						/					
			/						/					

PACIFIC ENVIRONMENTAL SERVICES, INC

4700 Duke Drive, Suite 150
Mason, Ohio 45040
513.398.2556 FAX: 513.398.3342

Sample Train Recovery Data

Plant: EPA Coke Bethlehem Steel Chesterton, IN Date: 8-11-98

Sampling Location: Baghouse Inlet

Sample Recovery Person: AK Field Team Leader: DS

Sampling Method Type: M429

Run Number: B-I-M429-1 Impinger Train ID: N-5

Job Number: S506.000

Comments: Particulate matter on third filter wont past filter - particulate found in teflon rinse line, condenser & XAD inlet All recovered.

Front Half Data

Filter No.: B-I-429-1 of 3 Filter Media Type: Teflon

Filter Description: Heavy Black Grains - loose

Filter No.: B-I-429-2 of 3 (Run 1) Filter Media Type: Teflon

Filter Description: Heavy Black Grains - loose

B-I-429-3 of 3 (Run 1)

Back Half Data

	XAD-Trap	Impinger 1	Impinger 2
Contents:	XAD	~~$NaHCO_3$/Na_2HCO_3~~ Empty	$NaHCO_3$/Na_2HCO_3
Final Volume: (~~ml~~) g	359.1	503.8	608.9
No Cap Initial Volume: (~~ml~~) g	342.7	477.0	614.1
Net Volume: (~~ml~~) g	16.4	26.8	-5.2

	Impinger 3	Impinger 4	Silica Gel
Contents:	$NaHCO_3$/Na_2HCO_3	Empty	Silica Gel
Final Volume: (~~ml~~) g	715.1	610.5	(g): 916.5
Initial Volume: (~~ml~~) g	714.8	607.0	(g): ~~875.5~~ JC 895.0
Net Volume: (~~ml~~) g	0.3	3.5	(g): 21.5

Total Moisture Collected (~~ml~~): g ~~62.6~~ JC 63.3

Description of Impinger catch: Clear

FIELD DATA SHEET

Plant: Bethlehem Steel
Sampling Location: Baghouse Inlet
Run Number: B-I-429-2 Date: 8-12-98
Pretest Leak Rate: .008 cfm @ 13 in. Hg.
Pretest Leak Check: Pitot: ✓ Orsat: —

Sample Type: 429 Operator: DDH
Pbar: 29.8 Ps: -2.3
CO2: 0.5 O2: 20.5
Probe Length/Type: 11'/S-Type Pitot #: —
Stack Diameter: 114 As: 70.88 (Ks = 2.09)

Nozzle ID: .215 Thermocouple #: —
Assumed Bws: 5 Filter #: Unnumbered
Meter Box #: MB-6 Y: 1.005 ΔH@: 1.778
Post-Test Leak Rate: .005 cfm @ 10 in. Hg.
Post-Test Leak Check: Pitot: — Orsat: —

24-Min points for 8 hr. Test

	Traverse Point Number	Sampling Time (min)	Clock Time (24-hour clock)	Gas Meter Reading (Vm) ft³	Velocity Head (Δp) in H2O	Orifice Pressure Differential (ΔH) in H2O Desired	Actual	Stack Temp. (Ts)	Temperature °F Probe	Filter	Impinger Temp. °F	Dry Gas Meter Temp. Inlet (Tm in °F)	Outlet (Tm out °F)	Pump Vacuum (in. Hg)	XAD
0	A 10	0	0924	528.618											
		7½	0931½	529.600	.02	.04	.04	118	250	251	48	72	73	2	49
		9½	0933½	530.910	.89	1.32	1.32	298	252	253	52	80	80	6	53
		17	0941	531.920	.02	.04	.04	117	253	256	51	80	80	2	51
		19	0943	532.920	.92	1.35	1.35	312	254	252	48	81	81	6	51
24	9	28	0952	533.500	.02	.04	.04	116	253	252	49	80	81	2	52
		30	0954	534.805	.96	1.39	1.39	321	252	253	51	81	81	6	51
		38½	1002½	535.702	.02	.04	.04	116	254	254	51	81	82	2	53
		40½	1004½	536.920	.95	1.38	1.38	318	255	255	52	82	82	6	52
48	8	48½	1012½	537.920	.02	.04	.04	115	251	253	51	81	81	2	52
		50½	1014½	539.000	.92	1.35	1.35	313	253	252	51	81	82	6	51
		60½	1024½	540.345	.02	.04	.04	116	252	251	50	81	81	2	50
		62½	1026½	541.560	.95	1.38	1.38	317	251	254	55	80	81	6	53
72	7	74	1038	542.690	.01	.02	.02	115	251	253	51	83	82	2	51
		76	1040	544.000	.96	~~1.39~~ 1.33	~~1.39~~ 1.33	~~350~~ 318	252	253	52	81	81	6	51
		86	1050	545.030	.01	.02	.02	114	252	251	50	81	80	2	52
Filter Dalong		88	1052	546.170	.95	1.38	1.38	317	251	252	51	81	81	6	51
96	6	108	1210	549.217	.01	.02	.02	114	251	251	52	82	82	2	51
		110	1212	550.400	.96	1.39	1.39	321	255	256	53	81	81	6	52
120	5	130	1232	552.800	.01	.02	.02	115	252	251	52	81	80	2	53
		132	1234	554.000	.92	1.35	1.35	300	253	252	51	76	77	6	52
		143	1245	555.110	.01	.02	.02	116	251	251	50	77	77	2	51
144	4	145	1247	556.210	1.05	1.48	1.48	336	252	253	50	76	78	6	51
		154	1256	557.050	.01	.02	.02	114	247	249	49	77	77	2	50
		156	1258	558.310	.96	1.39	1.39	321	255	250	53	77	77	6	50
168	3	165	1307	559.427	.01	.02	.02	117	250	250	52	77	77	2	49
		167	1309	560.700	.96	1.39	1.39	321	255	250	51	77	76	2	50

ΔVm = 87.37 √Δp = ~~.41~~ ΔH = ~~.025~~ Ts = ~~115~~ LC → (547.220 / 548.282) Tm = ~~79~~

Plant Name: Bethlehem Steel **Test Date:** 08/12/98

Run Number: B-I-429-2 **Operator:** Dennis D. Holeschuk

Traverse Point Number	Sampling Time, (min.)	Clock Time (24-hour clock)	Gas Meter Reading (V_m) ft³	Velocity Head (ΔP_s) in. H_2O	Orifice Pres. Differential (ΔH) in. H_2O Desired	Actual	Stack Temp. °F (T_s)	Probe Temp. / Filter Temp. °F	Impinger Temp. °F	Dry Gas Meter Temp. Inlet ($T_{m_{in}}$) °F	Outlet ($T_{m_{out}}$) °F	Pump Vacuum In. Hg	XAD
	176	1318	561.761	.01	.02	.02	118	249 / 249	48	77	77	2	49
192-2	178	1320	562.893	.97	1.42	1.42	309	255 / 250	56	78	77	6	56
	199	1341	564.400	.01	.02	.02	110	254 / 260	53	78	81	2	53
	201	1343	565.712	.89	1.30	1.30	306	230 / 230	52	78	80	6	54
	209	1351	566.921	.01	.02	.02	116	234 / 240	51	78	79	2	52
	211	1353	568.300	.95	1.38	1.38	318	232 / 238	56	82	83	6	51
216-1	218	1400	569.175	.01	.02	.02	115	236 / 232	54	82	84	2	52
	220	1402	570.205	1.05	1.48	1.48	336	236 / 233	53	76	78	6	51
	228	1410	570.950	.01	.02	.02	113	233 / 237	52	76	77	2	51
	230	1412	572.015	.97	1.42	1.42	310	234 / 238	51	76	76	6	50
240-1	240	1422	572.550	.01	.02	.02	114	234 / 236	53	76	78	2	51
	246	~~1428~~ 1539	574.017	.01	.02	.02	115	233 / 236	52	76	77	2	52
	248	~~1430~~ 1541	575.507	.95	1.38	1.38	318	233 / 234	51	82	80	6	51
	255½	1548½	576.278	.01	.02	.02	116	235 / 238	56	81	80	2	52
	257½	1550½	577.505	.96	1.42	1.42	306	236 / 238	55	82	81	6	50
268-2	267	1600	578.405	.01	.02	.02	116	236 / 240	54	82	81	2	51
	269	1602	579.400	.95	1.38	1.38	317	236 / 240	52	82	81	6	50
	279	1612	580.204	.01	.02	.02	114	237 / 236	52	82	80	2	51
	281	1614	581.549	.89	1.32	1.32	298	230 / 232	55	80	80	6	54
288-3	289	1622	582.602	.01	.02	.02	115	233 / 232	54	81	80	2	53
	291	1624	583.817	.97	1.42	1.42	309	238 / 236	53	78	79	6	52
	300	1633	584.430	.01	.02	.02	113	236 / 239	52	79	79	2	52
	302	1635	585.626	.95	1.36	1.36	325	232 / 238	52	78	79	6	51
	309	1642	586.170	.01	.02	.02	114	237 / 237	53	78	78	2	50

Plant Name: Bethlehem Steel **Test Date:** 8-12-98

Run Number: B-I-429-2 **Operator:** Dennis D. Holzschuh

Traverse Point Number	Sampling Time, (min.)	Clock Time (24-hour clock)	Gas Meter Reading (V_m) ft³	Velocity Head (ΔP_s) in. H_2O	Orifice Pres. Differential (ΔH) in. H_2O Desired	Orifice Pres. Differential (ΔH) in. H_2O Actual	Stack Temp. °F (T_s)	Probe Temp. / Filter Temp. °F	Impinger Temp. °F	Dry Gas Meter Temp. Inlet ($T_{m_{in}}$) °F	Dry Gas Meter Temp. Outlet ($T_{m_{out}}$) °F	Pump Vacuum In. Hg	XAD
312-4	311	1644	587.409	.99	1.41	1.41	331	235 / 239	51	78	79	6	49
336-5	336	1709	589.245	.01	.02	.02	118	236 / 237	50	78	79	2	51
	338	1711	590.300	.92	1.32	1.32	325	230 / 232	52	78	79	6	52
	346	1719	590.860	.01	.02	.02	115	234 / 231	51	77	78	2	51
	348	1721	591.947	.98	1.40	1.40	326	235 / 236	52	78	79	6	50
360-6	356	1729	592.400	.01	.02	.02	1.1[illegible]	236 / 237	51	78	79	2	51
	358	1731	593.705	.92	1.32	1.32	325	230 / 232	52	78	78	6	50
594.604	366	1739	~~593.604~~	.04	.02	.02	114	230 / 23[illegible]	51	78	78	2	51
	368	1741	595.940	.92	1.31	1.32	325	235 / 237	52	79	78	6	52
	376	1749	597.000	.01	.02	.02	115	232 / 233	51	79	78	2	51
	378	1751	598.241	.98	1.40	1.40	327	231 / 231	50	79	78	6	51
384-7	386	1759	599.021	.01	.02	.02	115	230 / 231	50	79	77	2	51
	388	1801	600.341	.98	1.40	1.40	327	230 / 230	50	79	78	6	50
	397	1810	601.342	.01	.02	.02	114	230 / 230	51	79	78	2	50
	399	1812	602.755	1.10	1.58	1.58	324	235 / 232	50	80	80	6	50
408-8	418½	1831½	604.641	.01	.02	.02	115	230 / 235	52	80	80	2	50
	420½	1833½	606.010	.98	1.40	1.40	326	231 / 232	51	79	79	6	51
	430	1843	606.565	.01	.02	.02	117	230 / 238	50	79	79	2	52
432-9	432	1845	607.890	.95	1.38	1.38	315	232 / 236	52	80	79	6	52
	439½	1852½	608.575	.01	.02	.02	116	234 / 229	51	80	80	2	51
	441½	1854½	609.800	.96	1.40	1.40	319	233 / 230	52	80	80	6	53
	450	1903	610.671	.01	.02	.02	112	230 / 235	51	80	78	2	52
	452	1905	612.090	.88	1.27	1.27	322	231 / 236	54	81	79	6	51
456-10	459½	1912½	613.000	.01	.02	.02	117	235 / 236	55	81	79	2	51

Plant Name: Bethlehem Steel **Test Date:** 8-12-98

Run Number: B-I-1029-2 **Operator:** DDH

Traverse Point Number	Sampling Time, (min.)	Clock Time (24-hour clock)	Gas Meter Reading (V_m) ft³	Velocity Head (ΔP_s) in. H_2O	Orifice Pres. Differential (ΔH) in. H_2O Desired	Orifice Pres. Differential (ΔH) in. H_2O Actual	Stack Temp. °F (T_s)	Probe Temp. / Filter Temp. °F	Impinger Temp. °F	Dry Gas Meter Temp. Inlet (T_{in}) °F	Dry Gas Meter Temp. Outlet (T_{out}) °F	Pump Vacuum In. Hg	XAD
	461½	1917 1918½	614.810	.96	1.40	1.40	319	237 / 230	48	80	80	6	49
	480	1933	615.810	.01	.02	.02	117	238 / 231	49	80	81	2	52
	482	1935	617.050	.96	1.40	1.40	319	237 / 239	49	80	81	6	91

[redacted]

PACIFIC ENVIRONMENTAL SERVICES, INC

4700 Duke Drive, Suite 150
Mason, Ohio 45040
513.398.2556 FAX: 513.398.3342

Sample Train Recovery Data

Plant: Bethlehem Steel - EPA Coke Clusterton, Ind. Date: 8-12-98
Sampling Location: Baghouse Inlet
Sample Recovery Person: RL/RD Field Team Leader: D. Schlegel
Sampling Method Type: Carb 429
Run Number: B-I-429-2 Impinger Train ID: RTP-00
Job Number: 5506.000

Comments: 3 filter used due to heavy loading

Front Half Data

Filter No.: Teflon Mat Filter Media Type: Not numbered
Filter Description: heavy black particulate
Filter No.: unnumbered Filter Media Type: Teflon mat
Filter Description: heavey black particulate

Back Half Data

	XAD-Trap	Impinger 1	Impinger 2
Contents:	XAD-2 Resin	Empty	$NaHCO_3/Na_2CO_3$
Final Volume: (ml)	375.4	519.2	563.1
Initial Volume: (ml)	~~357.4~~	495.8	~~495.8~~ 568.8
Net Volume: (ml)	24.0	~~13.4~~ 23.4	~~-5.7~~ -3

	Impinger 3	Impinger 4	Silica Gel
Contents:	$NaHCO_3/Na_2CO_3$	Empty	
Final Volume: (ml)	632.6	527.8	(g): 863.8
Initial Volume: (ml)	631.8	525.7	(g): 843.7
Net Volume: (ml)	0.8	2.1	(g): 20.1

Total Moisture Collected (ml): ~~54.7~~ 64.7
Description of Impinger catch: Clear

XAD Initial Run 3 wt = 339.0 g.

SB
8-26-98

FIELD DATA SHEET

Plant: Bethlehem Steel
Sampling Location: Baghouse Inlet
Run Number: B-F-429-3 Date: 8-13-98
Pretest Leak Rate: 15" cfm @ .002 in. Hg.
Pretest Leak Check: Pitot: ✓ Orsat: —
(+3.6)✓ (+5.3)

Sample Type: 429 Operator: DDH
Pbar: 29.8 Ps: -2.3
CO2: .5 O2: 20.5
Probe Length/Type: 11'/S Type Pitot #: RTP-11
Stack Diameter: 114" As: 10,207 in²

Nozzle ID: .215 Thermocouple #: RTP-11
Assumed Bws: 4.5 Filter #: Unnumbered
Meter Box #: MB-6 Y: 1.005 ΔH@: 1.778
Post-Test Leak Rate: .006 cfm @ 6" in. Hg.
Post-Test Leak Check: Pitot: ✓ Orsat: —

Traverse Point Number	Sampling Time (min)	Clock Time (24-hour clock)	Gas Meter Reading (Vm) ft³	Velocity Head (Δp) in H2O	Orifice Pressure Differential (ΔH) in H2O Desired	Orifice Pressure Differential (ΔH) in H2O Actual	Stack Temp. (Ts)	Temperature °F Probe	Temperature °F Filter	Impinger Temp. °F	Dry Gas Meter Temp. Inlet (Tm in °F)	Dry Gas Meter Temp. Outlet (Tm out °F)	Pump Vacuum (in. Hg)	
10	0	1332	665.010											XAD
	6	1338	665.800	.02	.04	.04	118	234	231	48	77	78	2	48
	8	1340	667.110	1.05	1.52	1.52	317	235	232	49	77	78	6	49
	16½	1348½	667.972	.02	.04	.04	116	237	235	49	77	77	2	50
	18½	1350½	669.310	.99	1.42	1.42	322	240	237	49	78	77	6	50
	29½	1401½	670.401	.02	.04	.04	117	240	238	50	78	77	2	50
(36) 9	31½	1403½	671.550	1.29	1.86	1.86	318	238	237	50	78	78	6	51
	47	1419	673.230	.02	.04	.04	119	236	239	51	78	78	2	51
	49	1421	674.665	.98	1.43	1.43	308	230	240	51	78	78	6	52
(72) 8	97	1509	680.750	.02	.04	.04	111	231	232	52	78	77	2	52
(96) 7	99	1511	682.370	.95	1.37	1.37	317	232	237	52	78	77	6	53
	107	1519	682.812	.02	.04	.04	113	234	236	52	79	78	2	50
	109	1521	684.121	.98	1.42	1.42	319	236	231	54	79	77	6	51
	116	1528	685.317	.02	.04	.04	114	238	233	55	79	77	2	51
	118	1530	686.989	.98	1.42	1.42	321	237	234	51	78	77	6	52
	126	1538	687.915	.02	.04	.04	115	238	236	51	78	77	2	51
	128	1540	688.975	.98	1.42	1.42	321	237	236	51	78	77	6	50
(132) 6	136	1548	689.915	.02	~~.04~~ .04	.04	114	239	236	52	78	77	2	50
	138	1550	691.150	.94	1.36	1.36	325	241	242	50	81	79	6	52
	146	1558	691.920	.02	.04	.04	115	242	237	51	82	79	2	51
	148	1600	693.417	.96	1.39	1.39	319	244	240	50	81	78	6	52
	156½	1608½	694.250	.02	.04	.04	117	245	238	48	82	78	2	50
	158½	1610½	695.587	.94	1.36	1.36	324	232	237	49	80	77	6	51
	165½	1617½	696.300	.02	.04	.04	113	249	236	53	81	77	2	52
	167½	1619½	697.955	1.05	1.55	1.55	305	250	237	52	81	77	6	51
(168) 5	182	1634	699.781	.02	.04	.04	114	225	236	52	81	77	2	52
	184	1636	701.045	1.00	1.47	1.47	306	235	237	51	81	78	6	51

ΔVm= 69.186 $\overline{\sqrt{\Delta p}}$= _____ $\overline{\Delta H}$= _____ $\overline{Ts}$= _____ $\overline{Tm}$= 80

Plant Name: Bethlehem Steel

Test Date: 08-13-98

Run Number: B-I-M429-3

Operator: Dennis D. Holzschuh

Traverse Point Number	Sampling Time, (min.)	Clock Time (24-hour clock)	Gas Meter Reading (V_m) ft³	Velocity Head (ΔP_s) in. H_2O	Orifice Pres. Differential (ΔH) in. H_2O Desired	Orifice Pres. Differential (ΔH) in. H_2O Actual	Stack Temp. °F (T_s)	Probe Temp. / Filter Temp. °F	Impinger Temp. °F	Dry Gas Meter Temp. Inlet ($T_{m_{in}}$) °F	Dry Gas Meter Temp. Outlet ($T_{m_{out}}$) °F	Pump Vacuum In. Hg	XAD
	193	1645	702.050	.02	.04	.04	112	232 / 239	53	81	80	2	49
	195	1647	703.350	.94	1.36	1.36	323	233 / 236	52	81	81	6	51
(204) 4	209½	1701½	705.139	.02	.04	.04	113	236 / 237	52	81	81	2	50
	211½	1703½	706.455	.99	1.44	1.44	315	236 / 237	51	81	81	6	50
	218½	1710½	707.017	.02	.04	.04	112	237 / 239	52	81	80	2	51
	220½	1712½	708.202	.96	1.38	1.38	324	238 / 236	51	81	80	6	52
	229	1721	709.105	.02	.04	.04	114	233 / 235	52	81	80	2	51
	231	1723	710.417	1.03	1.49	1.49	320	236 / 239	51	81	80	6	52
(240) → 3	243½	1735½	711.215	.02	.04	.04	118	232 / 238	50	81	80	2	51
	245½	1737½	712.880	1.03	1.49	1.49	321	232 / 236	52	81	80	6	52
	253	1745	713.600	.02	.04	.04	117	234 / 235	51	81	80	2	51
	255	1747	715.050	1.00	1.45	1.45	322	231 / 232	51	81	80	6	52
	268	1800	716.620	.02	.04	.04	116	236 / 232	52	81	80	2	51
	270	1802	717.800	.96	1.38	1.38	325	238 / 236	52	81	81	6	52
(276) → 2	278	1810	718.600	.02	.04	.04	120	238 / 239	52	81	81	2	52
	280	1812	720.010	.96	1.38	1.38	324	236 / 233	52	81	81	6	52
	288½	1820½	721.000	.02	.04	.04	116	234 / 237	53	81	81	2	51
	290½	1822½	722.210	.86	1.27	1.27	306	234 / 235	53	81	81	6	52
	304	1836	723.680	.02	.04	.04	115	235 / 236	52	82	81	2	51
	306	1838	724.971	.97	1.41	1.41	315	234 / 237	51	81	80	6	50
(312) → 1	316	1848	725.826	.02	.04	.04	116	235 / 236	52	81	81	2	51
	318	1850	727.290	.97	1.41	1.41	320	234 / 233	51	81	81	6	50
	332	1904	728.550	.02	.04	.04	117	235 / 231	52	81	81	2	52
	334	1906	729.819	1.00	1.45	1.45	322	234 / 236	51	81	80	6	51

Plant Name: Bethlehem Steel **Test Date:** 08-13-98

Run Number: B-I-429-3 **Operator:** Dennis D. Holzschuh

Traverse Point Number	Sampling Time, (min.)	Clock Time (24-hour clock)	Gas Meter Reading (V_m) ft³	Velocity Head (ΔP_s) in. H_2O	Orifice Pres. Differential (ΔH) in. H_2O Desired	Orifice Pres. Differential (ΔH) in. H_2O Actual	Stack Temp. °F (T_s)	Probe Temp. / Filter Temp.° F	Impinger Temp. °F	Dry Gas Meter Temp. Inlet ($T_{m_{in}}$)° F	Dry Gas Meter Temp. Outlet ($T_{m_{out}}$) °F	Pump Vacuum In. Hg	XAD
	342	1914	730.200	.02	.04	.04	115	236 / 234	49	81	81	2	50
	344	1916	731.530	1.00	1.45	1.45	[illegible]	234 / 235	51	81	80	6	51
	360	1932	732.870	.02	.04	.04	116	235 / 236	51	81	80	2	52
	362	1934	734.196	.99	1.44	1.44	315	234 / 238	51	81	81	6	51

PACIFIC ENVIRONMENTAL SERVICES, INC

4700 Duke Drive, Suite 150
Mason, Ohio 45040
513.398.2556 FAX: 513.398.3342

Sample Train Recovery Data

Plant: Coke Bethlehem Steel-EPA Chesterton, Ind Date: 8/14/96

Sampling Location: Inlet Bag house

Sample Recovery Person: RWJ/DC Field Team Leader: DS

Sampling Method Type: M Carb Method 429

Run Number: B-I-~~M24~~ M429-3 Impinger Train ID: N-5

Job Number: 5506.000

Comments:

Front Half Data

Filter No.: B-I-M429-3 Unused Teflon Filter Media Type: ~~Glass fiber~~ Teflon mat

Filter Description: heavy black

Filter No.: — Filter Media Type: —

Filter Description: —

Back Half Data

	XAD-Trap	Impinger 1	Impinger 2
Contents:	XAD-2	empty	$NaHCO_3/Na_2CO_3$
Final Volume: (ml)	355.0	495.7	712.0
Initial Volume: (ml)	343.3	479.0	712.3
Net Volume: (ml)	11.7	16.7	-0.3

	Impinger 3	Impinger 4	Silica Gel
Contents:	$NaHCO_3/Na_2CO_3$	empty	
Final Volume: (ml)	610.5	610.5	(g): 941.7
Initial Volume: (ml)	617.5	609.3	(g): 912.0
Net Volume: (ml)	-1.0	2.2	(g): 29.7

Total Moisture Collected (ml): 59.0

Description of Impinger catch: clear

SB
8-27-96

FIELD DATA SHEET

Plant: Bethlehem Steel
Sampling Location: Baghouse Inlet
Run Number: B-I-429-FB Date: 08- -98
Pretest Leak Rate: 15" cfm @ 0.010 in. Hg.
Pretest Leak Check: Pitot: — Orsat: —

Sample Type: 429 Operator: DDH
Pbar: 29.7 Ps: 0
CO2: .5 O2: 20.5
Probe Length/Type: 5'/S Type Pitot #: ____
Stack Diameter: ____ As: ____

Nozzle ID: .215 Thermocouple #: ____
Assumed Bws: 4 Filter #: Unnumbered
Meter Box #: Meter Y: 1.005 ΔH@: 1.728
Post-Test Leak Rate: 0.010 cfm @ 15 in. Hg.
Post-Test Leak Check: Pitot: — Orsat: —

Traverse Point Number	Sampling Time (min)	Clock Time (24-hour clock)	Gas Meter Reading (Vm) ft^3	Velocity Head (Δp) in H2O	Orifice Pressure Differential (ΔH) in H2O		Stack Temp. (Ts)	Temperature °F		Impinger Temp. °F	Dry Gas Meter Temp.		Pump Vacuum (in. Hg)
					Desired	Actual		Probe	Filter		Inlet (Tm in°F)	Outlet (Tm out°F)	
	1600	0	734.642										
	1615	15	734.865	N/A	N/A	N/A	N/A	240	240	80	N/A	N/A	
	1630	30	735.000	↓	↓	↓	↓	↓	↓	80	N/A	N/A	
	1645	45	735.100	↓	↓	↓	↓	↓	↓	80	N/A	N/A	

15"
0.010

ΔVm= ____ $\overline{\sqrt{\Delta p}}$= ____ $\overline{\Delta H}$= ____ $\overline{Ts}$= ____ $\overline{Tm}$= ____

PACIFIC ENVIRONMENTAL SERVICES, INC

4700 Duke Drive, Suite 150
Mason, Ohio 45040
513.398.2556 FAX: 513.398.3342

Sample Train Recovery Data

Plant: Bethlehem Steel EPA Coke Chesterton Date: 8/14/98

Sampling Location: Baghouse Inlet

Sample Recovery Person: RWD / RK Field Team Leader: DS

Sampling Method Type: Method 429

Run Number: B-I-429-FB Impinger Train ID: RTP 00

Job Number: S 506.000

Comments: Baghouse Inlet Field Blank

Front Half Data

Filter No.: B-I-429-FB NA Filter Media Type: Teflon mat

Filter Description: Clean

Filter No.: — Filter Media Type: —

Filter Description: —

Back Half Data

	XAD-Trap	Impinger 1 (Empty Duncan)	Impinger 2
Contents:	XAD-2	~~$NaHCO_3/Na_2CO_3$~~	$NaHCO_3/Na_2CO_3$
Final Volume: (ml)	328.3	496.7	637.5
Initial Volume: (ml)	328.3	496.8	637.4
Net Volume: (ml)	0.0	-0.1	0.1

	Impinger 3	Impinger 4	Silica Gel
Contents:	$NaHCO_3/Na_2CO_3$	Empty	Si Gel
Final Volume: (ml)	512.8	528.0	(g): 864.0
Initial Volume: (ml)	512.2	528.0	(g): 863.6
Net Volume: (ml)	0.6	0.0	(g): 0.4

Total Moisture Collected (ml): 1.0

Description of Impinger catch:

SB
8-27-9

one longer nipple due to flange spiral on stack

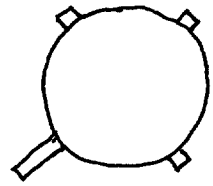

Cross-section

TRAVERSE POINT LOCATION FOR CIRCULAR DUCTS

Plant: Bethlehem Steel

Date: 8-10-98

Sampling Location: B.H. Outlet

Inside of Far Wall to Outside of Nipple: 124 (see following page)

Inside of Near Wall to Outside of Nipple (Nipple Length): 8/17.5

Stack I.D.: 108"

Distance Downstream from Flow Disturbance (Distance B):

660 inches / Stack I.D. = 6.1 dd

Distance Upstream from Flow Disturbance (Distance A):

330 inches / Stack I.D. = 2.90 dd

Calculated By: NN/TA

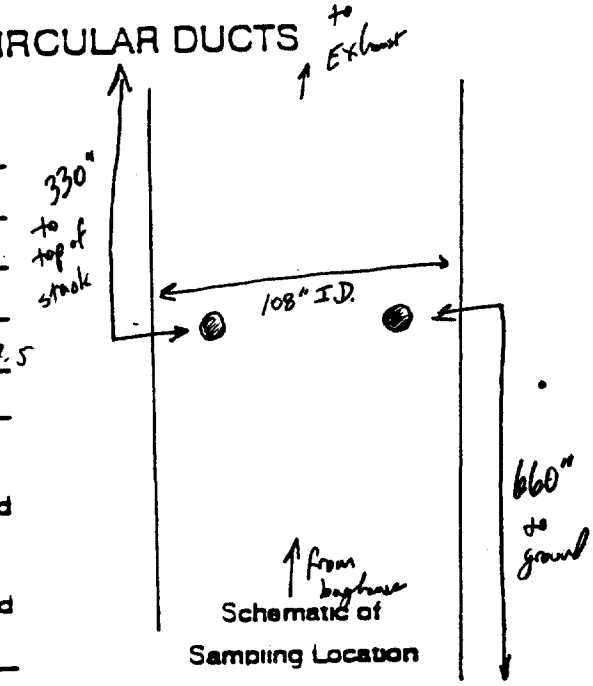

Schematic of Sampling Location

Traverse Point Number	Fraction of Length	Length (inches)	Product of Columns 2 & 3 (To nearest 1/8")	Nipple Length (inches)	Traverse Point Location (Sum of Col. 4 & 5)
1	0.032	108"	NN ~~[illegible]~~ 3.1/2	8 / 17.5	11.1/2 / 21.0
2	0.105		NN ~~[illegible]~~ 11.3/8	8 / 17.5	19.3/8 / 28 7/8
3	0.194		21.0	8 / 17.5	29.0 / 38 1/2
4	0.323		34.7/8	8 / 17.5	42 7/8 / 52 3/8

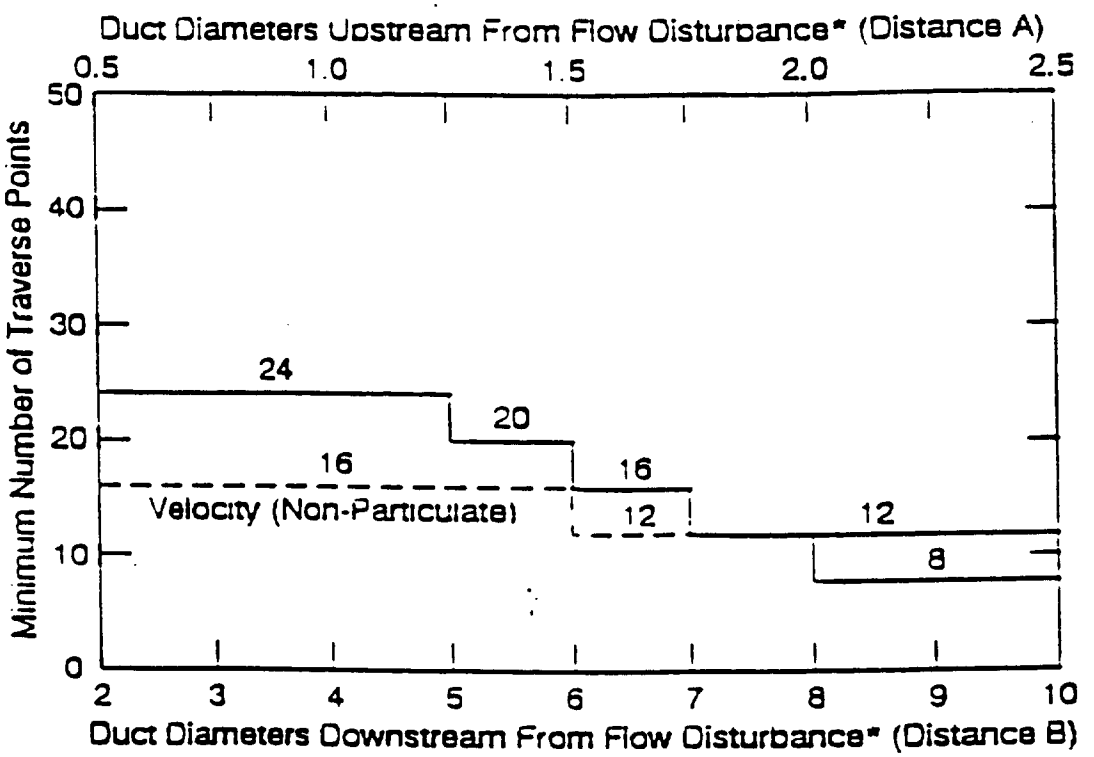

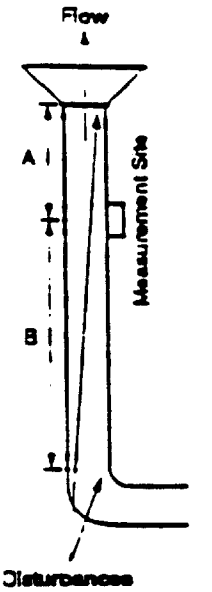

LOCATION OF TRAVERSE POINTS IN CIRCULAR DUCTS
(Fraction of Stack Diameter from Inside Wall to Traverse Point)

Traverse Point Number on a Diameter	Number of Traverse Points on a Diameter				
	4	6	8	10	12
1	0.067	0.044	0.032	0.026	0.021
2	0.250	0.146	0.105	0.082	0.067
3	0.750	0.296	0.194	0.146	0.118
4	0.933	0.704	0.323	0.226	0.177
5		0.854	0.677	0.342	0.250
6		0.956	0.806	0.658	0.356
7			0.895	0.774	0.644
8			0.968	0.854	0.750
9				0.918	0.823
10				0.974	0.882
11					0.933
12					0.979

	8"	17.5"
1	11.5	21

Baghouse Outlet
Bethlehem Steel

* Will sample all 4 ports,
4 pts/port.

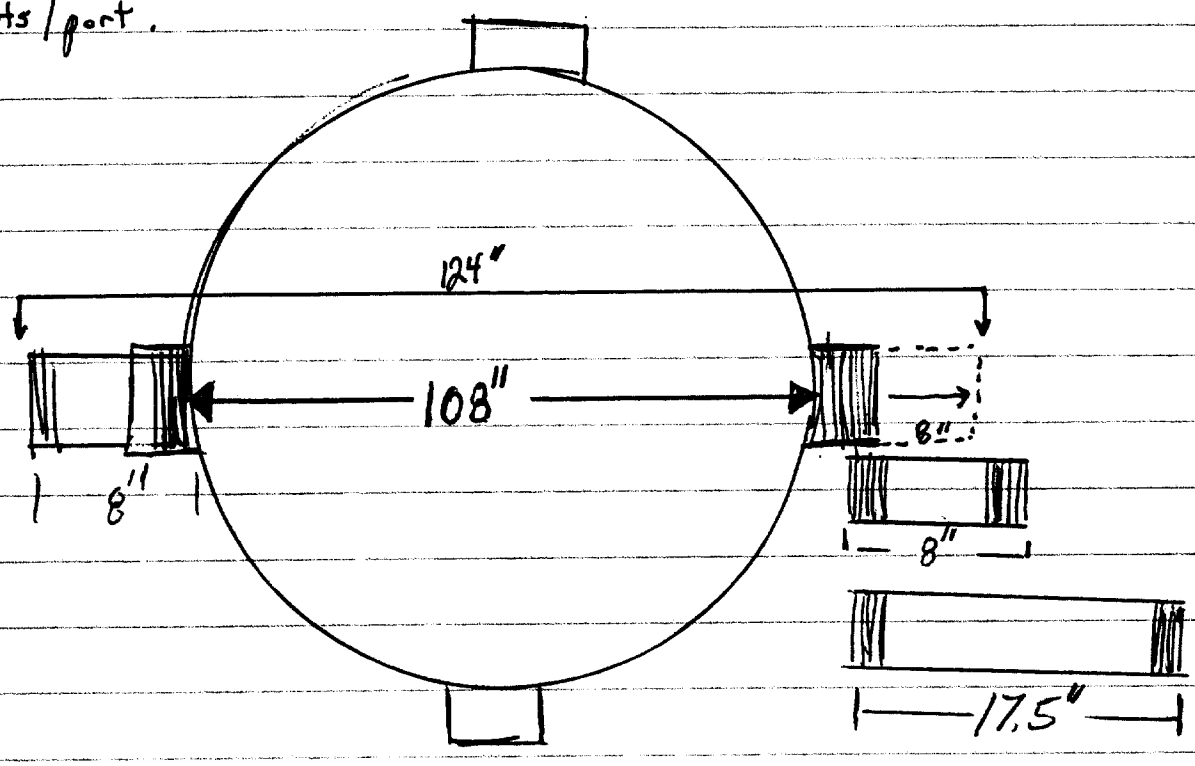

124" length = measured across the stack through 2 - 8" nipples, rather than just one.
124"

By DS/RK

315 4 429 2
1.872 1.797
.979 1.002 K= 2.31

GAS VELOCITY AND VOLUMETRIC FLOW RATE

Plant: EPA Bethlehem Steel - Indiana Date: 8-10-98
Sampling Location: Baghouse Outlet Clock Time: _____
Run #: Preliminary Operators: TA/NN/SB
Barometric Pressure, in. Hg: _____ Static Pressure, in. H_2O: _____
Moisture, %: _____ Molecular wt., Dry: _____ Pitot Tube, Cp: _____
Stack Dimension, in. Diameter or Side 1: _____ Side 2: _____
Wet Bulb, °F: _____ Dry Bulb, °F: _____

Port Location	Traverse Point Number	Velocity Head in. H_2O	Stack Temp °F	Cyclonic Flow Angle Direction
1	1	.78	159	7°
	2	1.0	158	3° SB
	3	.60	158	3°
	4	.08	156	
2	1	0.74	162	0°
	2	0.68	162	4° SB
	3	.85	140	4°
	4	.85	141	
3	1	.92	158	2°
	2	.89	157	
	3	.91	152	2°
	4	.75	157	
4	1	.90	159	6°
	2	1.0	158	
	3	.99	158	5°
	4	.79	158	
		$\overline{\sqrt{\Delta P}}$ =	$\overline{Ts}$ =	

.916 ~157

$Md = (0.44 \times \%CO_2) + (0.32 \times \%O_2) + (0.28 \times \%N_2)$

$Md = (0.44 \times \quad) + (0.32 \times \quad) + (0.28 \times \quad)$

$Md =$ Ate 1.74

$Ms = Md \times (1 - \frac{\%H_2O}{100}) + 18 (\frac{\%H_2O}{100})$ T_M 80

$Ms = (\quad) \times (1 - \frac{\quad}{100}) + 18 (\frac{\quad}{100})$ T_s 157

$Ms =$

$\overline{Ts} = \quad °F = \quad °R \ (°F + 460)$ C_p .84

$Ps = Pb + \frac{S.P.}{13.6} = (\quad) + \frac{\quad}{13.6}$ H_2O % 5

$Ps = \quad$ in. Hg Nozzle .27

$\overline{\sqrt{\Delta P}} =$ K 2.25

$Vs = 85.49 \times Cp \times \overline{\sqrt{\Delta P}} \times \sqrt{\frac{Ts\ (°R)}{Ps \times Ms}}$

$Vs = 85.49 \times (\quad) \times (\quad) \times \sqrt{\quad}$

$Vs = \quad$ ft/s

$As = \quad ft^2$

$Qs = Vs \times As \times 60$ s/m

$Qs = \quad \times \quad \times 60$

$Qs = \quad$ acfm

$Qs_{std} = Qs \times 17.647 \times \frac{Ps}{Ts} \times (1 - \frac{\%H_2O}{100})$

$Qs_{std} = \quad \times 17.647 \times \frac{\quad}{\quad} \times (1 - \frac{\quad}{100})$

$Qs_{std} = \quad$ dscfm

Pacific Environmental Services, Inc.

EPA Coke - Bethlehem Steel

Dry Molecular Weight Determination

Client/Project:	5506.000	Orsat No.	1
Date/Time:	8/12/98	Operator:	Z Kalb
Sample Type:	Orsat	Comments:	
Ambient Temp. °F	70°F	Site Location:	Bethlehem Butler

Run No.(s)	Gas	Run 1		Run 2		Run 3		Average Net Volume %	Multiplier	Molecular Weight of Stack Gas, Md (lb/Mole)
B-O-2A		Actual	Net	Actual	Net	Actual	Net			
	CO_2	0.5	0.5	0.5	0.5			0.5	0.44	
	O_2[a]	20.5	20.0	20.5	20.0			20.0	0.32	
	CO[b]								0.28	
	N_2[c]	100.0	79.5	100.0	79.5			79.5	0.28	
									Md =	

Run No.(s)	Gas	Run 1		Run 2		Run 3		Average Net Volume %	Multiplier	Molecular Weight of Stack Gas, Md (lb/Mole)
B-O-2B		Actual	Net	Actual	Net	Actual	Net			
	CO_2	0.5	0.5	0.5	.5			0.5	0.44	
	O_2[a]	20.6	20.1	20.5	~~0.5~~			20.05	0.32	
	CO[b]				20.0				0.28	
	N_2[c]	100.0	79.4	100	79.5			79.45	0.28	
									Md =	

Run No.(s)	Gas	Run 1		Run 2		Run 3		Average Net Volume %	Multiplier	Molecular Weight of Stack Gas, Md (lb/Mole)
B-O-2C		Actual	Net	Actual	Net	Actual	Net			
	CO_2	0.5	0.5	0.5	0.5			0.5	0.44	
	O_2[a]	20.		20.5	20.0			20.0	0.32	
	CO[b]								0.28	
	N_2[c]							79.5	0.28	
									Md =	

[a] O_2 Net Volume is O_2 actual reading minus CO_2 actual reading.

[b] CO Net Volume is CO actual reading minus O_2 actual reading.

[c] N_2 Net Volume is 100 minus CO actual reading.

PACIFIC ENVIRONMENTAL SERVICES, INC.

Pacific Environmental Services, Inc.

EPA Coke - Bethlehem Steel

Dry Molecular Weight Determination

Client/Project:	SS06.000	Orsat No.	1
Date/Time:	8/11/98	Operator:	R Kolb / D. Schafer
Sample Type:	Orsat	Comments:	
Ambient Temp. °F	70°F	Site Location:	Baghouse Outlet

Run No.(s)	Gas	Run 1		Run 2		Run 3		Average Net Volume %	Multiplier	Molecular Weight of Stack Gas, Md (lb/Mole)
		Actual	Net	Actual	Net	Actual	Net			
B-0-1A	CO_2	0.5	0.5	0.5	0.5			0.5	0.44	
	O_2[a]	21.0	20.5	21.0	20.5			20.5	0.32	
	CO[b]								0.28	
	N_2[c]	100.00	79.0	100.0	79.0			79.0	0.28	
									Md =	

Run No.(s)	Gas	Run 1		Run 2		Run 3		Average Net Volume %	Multiplier	Molecular Weight of Stack Gas, Md (lb/Mole)
		Actual	Net	Actual	Net	Actual	Net			
B-0-1B	CO_2	0.4	0.4	0.4	0.4			0.4	0.44	
	O_2[a]	21.0	20.6	20.8	20.4			20.5	0.32	
	CO[b]								0.28	
	N_2[c]	100.0	79.0	100.0	79.2			79.1	0.28	
									Md =	

Run No.(s)	Gas	Run 1		Run 2		Run 3		Average Net Volume %	Multiplier	Molecular Weight of Stack Gas, Md (lb/Mole)
		Actual	Net	Actual	Net	Actual	Net			
B-0-1C	CO_2	0.4	0.4	0.5	0.5			0.45	0.44	
	O_2[a]	21.0	20.6	21.0	20.5			20.55	0.32	
	CO[b]								0.28	
	N_2[c]	100.0	79.0	100.0	79.0			79.0	0.28	
									Md =	

[a] O_2 Net Volume is O_2 actual reading minus CO_2 actual reading.

[b] CO Net Volume is CO actual reading minus O_2 actual reading.

[c] N_2 Net Volume is 100 minus CO actual reading.

PACIFIC ENVIRONMENTAL SERVICES, INC.

Pacific Environmental Services, Inc.

Dry Molecular Weight Determination

Client/Project: EPA Coke - Bethlehem Steel

Date/Time: 8/13/98

Sample Type: Orsat

Ambient Temp. °F: 70°F

Orsat No.: 1

Operator: R Kell

Comments:

Site Location: Bayview Butler

Run No.(s)	Gas	Run 1		Run 2		Run 3		Average Net Volume %	Multiplier	Molecular Weight of Stack Gas, Md (lb/Mole)
B-0-3A		Actual	Net	Actual	Net	Actual	Net			
	CO_2	0.4	0.4	0.4	0.4				0.44	
	O_2[a]	20.6		20.6					0.32	
	CO[b]								0.28	
	N_2[c]	100.0		100.0					0.28	
									Md =	

Run No.(s)	Gas	Run 1		Run 2		Run 3		Average Net Volume %	Multiplier	Molecular Weight of Stack Gas, Md (lb/Mole)
B-0-3B		Actual	Net	Actual	Net	Actual	Net			
	CO_2	0.5	0.5	0.4	0.4				0.44	
	O_2[a]	20.6		20.6					0.32	
	CO[b]								0.28	
	N_2[c]	100.0		100.0					0.28	
									Md =	

Run No.(s)	Gas	Run 1		Run 2		Run 3		Average Net Volume %	Multiplier	Molecular Weight of Stack Gas, Md (lb/Mole)
B-0-3C		Actual	Net	Actual	Net	Actual	Net			
	CO_2	0.5	0.5	0.5	0.5				0.44	
	O_2[a]	20.5	20.0	20.5	20.0				0.32	
	CO[b]								0.28	
	N_2[c]	100.0		100.0					0.28	
									Md =	

[a] O_2 Net Volume is O_2 actual reading minus CO_2 actual reading.

[b] CO Net Volume is CO actual reading minus O_2 actual reading.

[c] N_2 Net Volume is 100 minus CO actual reading.

PACIFIC ENVIRONMENTAL SERVICES, INC.

METHOD 18 FIELD DATA SHEET

Plant: EPA Coke Bethlehem Steel
Date: 8-11-98
Location: Baghouse Outlet
Run #: B-O-M5506-1
Stack I.D.: 108"
Pbar: 29.70
Sample Tube #: B-O-M5506-1 Tube A, B, C
Operators: TA
Leak Check: Pre: ✓ Post: ✓

Tested Analyte: PAH
Orifice Tank #: —
Pump/Rotometer #: Vost #1
Pt: Pretest (mm Hg): —
Post-Test (mm Hg): —
Tt: Pretest (°F): —
Post-Test (°F): —
Time: Start: — Finish: — Total: 330
W/B: — D/B: — O_2: 21 CO_2: 0

Time	Gauge Vacuum (Hg)	Flow Setting
—	—	—
—	—	—
—	—	—
—	—	—
—	—	—
—	—	—
—	—	—

Pretest 0.0 @ 17" Hg

	Traverse Point Number (Volume)	Velocity Head in. H2O (Vacu.)	Stack Temp. °F (Rot.)	Tn °F
12070	9021.75	3	1	82
12225	9037.5	3	1	83
30	9058.0	3	1	84
45	9072.0	3	1	85
60	9090.0	3	1	85
75	9102	3	1	86
90	9120	3	1	86
105	9139	3	1	86
120	9150	3	1	85
135	9165	3	1	85
150	9178	3	1	87
1446 155	9182	3	1	84
1726 170	9197	3	1	84
185	9212	3	1	85
200	9227	3	1	86
215	9234	3	1	86
230	9246	3	1	86
245	9265	3	1	86
260	9281	3	1	85
275	9297	3	1	84
1932 290	9313	3	1	82
305	9328	2	1	82
320	9334.5	2	1	82
1800 330	9352.75	2	1	82

Post 0.0 @ 15" Hg

$Md = (0.44 \times \%CO_2) + (0.32 \times \%O_2) + (0.28 \times \%N_2)$

$Md = (0.44 \times \quad) + (0.32 \times \quad) + (0.28 \times \quad)$

$Md =$

$Ms = Md \times (1 - \frac{\% H_2O}{100}) + 18 (\frac{\% H_2O}{100})$

$Ms = (\quad) \times (1 - \frac{\quad}{100}) + 18 (\frac{\quad}{100})$

$Ms =$

$Ts = \quad °F = \quad °R \ (°F + 460)$

$Ps = Pb + \frac{S.P.}{13.6} = (\quad) + \frac{\quad}{13.6}$

$Ps = \quad$ in. Hg

$\sqrt{\Delta P} =$

$Vs = 85.49 \times Cp \times \sqrt{\Delta P} \times \sqrt{\frac{Ts\ (°R)}{Ps \times Ms}}$

$Vs = 85.49 \times (\quad) \times (\quad) \times \sqrt{\quad}$

$Vs = \quad$ ft/s

$As = \quad ft^2$

$Qs = Vs \times As \times 60$ s/m

$Qs = \quad \times \quad \times 60$

$Qs = \quad$ acfm

$Qs_{std} = Qs \times 17.647 \times \frac{Ps}{Ts} \times (1 - \frac{\% H_2O}{100})$

$Qs_{std} = \quad \times 17.647 \times \frac{\quad}{\quad} \times (1 - \frac{\quad}{100})$

$Qs_{std} = \quad$ dscfm

METHOD 18 FIELD DATA SHEET

Plant: EPA Coke Bethlehem Steel - IN
Date: 8-12-98
Location: Baghouse Outlet
Run #: BO-M5SOG-2
Stack I.D.: 108"
Pbar: 29.8
Sample Tube #: B-O-M5SOG-2 Tube A, B, C
Operators: TA
Leak Check: Pre: ✓ Post: ✓

Tested Analyte: PAH
Orifice Tank #: —
Pump/Rotometer #: Vost #2
Pt: Pretest (mm Hg): —
Post-Test (mm Hg): —
Tt: Pretest (°F): —
Post-Test (°F): —
Time: Start: — Finish: — Total: 450
W/B: — D/B: — O_2: 21 CO_2: 0

Time	Gauge Vacuum (Hg)	Flow Setting

Pretest @ 17" Hg

	Vm Traverse Point Number	Vac. Velocity Head in. H_2O	Rot Stack Temp. °F	Tm
0944 0	9353.08	2	1	85
15	9370.0	2	1	86
30	9385.0	2	1	86
1028 45	9412.0	3	1.8	88
60	9440.0	3	1.8	96
1058 75	9466	3	1.8	88
90	9485	3	1.8	96
105	9522	3	1.8	94
1210 ~~119~~	9549	3	1.8	84
1226 135	9578	3	1.8	85
149	9600	3	1.8	85
164	9637	3	1.8	86
1323 190	9684	3	1.8	86
210	9715	3	1.8	85
225	2727	3	1.8	85
1420 235	2738	3	1.8	86
1550 260	2789	3	1.8	81
1606 276	2817	3	1.8	83
300	2960	3	1.8	86
315	9890	~~4~~ 5	1.8	86
340	9929	5	1.8	87
363	9985	5	1.8	86
1751 380	10019.00	4	1.8	86
395	10,049.00	5	1.8	84
420	10,098.0	5	1.8	85
436	10,129.00	5	1.8	86
Post @ 17" Hg 1902 450	10,156.40	5	1.8	85

$Md = (0.44 \times \%CO_2) + (0.32 \times \%O_2) + (0.28 \times \%N_2)$

$Md = (0.44 \times \quad) + (0.32 \times \quad) + (0.28 \times \quad)$

$Md =$

$Ms = Md \times (1 - \frac{\%H_2O}{100}) + 18 (\frac{\%H_2O}{100})$

$Ms = (\quad) \times (1 - \frac{\quad}{100}) + 18 (\frac{\quad}{100})$

$Ms =$

$Ts = \quad °F = \quad °R \ (°F + 460)$

$Ps = Pb + \frac{S.P.}{13.6} = (\quad) + \frac{\quad}{13.6}$

$Ps = \quad$ in. Hg

$\sqrt{\Delta P} =$

$Vs = 85.49 \times Cp \times \sqrt{\Delta P} \times \sqrt{\frac{Ts\ (°R)}{Ps \times Ms}}$

$Vs = 85.49 \times (\quad) \times (\quad) \times \sqrt{\quad}$

$Vs = \quad$ ft/s

$As = \quad ft^2$

$Qs = Vs \times As \times 60$ s/m

$Qs = \quad \times \quad \times 60$

$Qs = \quad$ acfm

$Qs_{std} = Qs \times 17.647 \times \frac{Ps}{Ts} \times (1 - \frac{\%H_2O}{100})$

$Qs_{std} = \quad \times 17.647 \times \frac{\quad}{\quad} \times (1 - \frac{\quad}{100})$

$Qs_{std} = \quad$ dscfm

METHOD 18 FIELD DATA SHEET

Plant: EPA Coke Bethlehem Steel
Date: 8-13-98
Location: Baghouse Outlet
Run #: B-O-M5506-3
Stack I.D.: 108
Pbar: 29.8
Sample Tube #: B-O-M5506-3 Tubes A,B,C
Operators: TA
Leak Check: Pre: ✓ Post:

Tested Analyte: PAH
Orifice Tank #: —
Pump/Rotometer #: Vost #2
Pt: Pretest (mm Hg): —
Post-Test (mm Hg): —
Tt: Pretest (°F): —
Post-Test (°F): —
Time: Start: — Finish: — Total:
W/B: — D/B: — O_2: 21 CO_2: 0

Pre
0 @ 16" Hg
Post

Time	Gauge Vacuum (Hg)	Flow Setting

	Vm Traverse Point Number	Vac Velocity Head in. H2O	Rot Stack Temp. °F	Tm
0840	0 X 156.92	4	1.8	77
	16 188	4	2	77
0910	226	4	2	83
0925	249	4	2	84
0940	277	4	2	90
0955	307	4	1.9	92
1010	337	4	2.0	93
1025	367	4	1.9	95
1040	395	4	1.9	97
1055	427	4	1.9	98
1110	458	4	1.9	99
1125	482	4	1.9	100
1140	515	4	1.9	100
1155	542	4	1.9	95
1210	572	4	1.9	96
1225	602	4	1.9	94
1240	630	4	1.9	94
Port change 1255	650	4	1.9	93
1400	248 686	4	1.9	86
1422	280 731	4	1.9	88
	310	4	1.9	90
1502	330 808	4	1.9	91
1550	0 909	4	2.0	95
1605	0 937	4	2.0	96
1625	0 976	4	2.0	98
1640	1008	4	2	97
1655	1037	4	2	97
1710	1068	4	2	97

$Md = (0.44 \times \%CO_2) + (0.32 \times \%O_2) + (0.28 \times \%N_2)$

$Md = (0.44 \times \quad) + (0.32 \times \quad) + (0.28 \times \quad)$

$Md =$

$Ms = Md \times (1 - \frac{\%H_2O}{100}) + 18 (\frac{\%H_2O}{100})$

$Ms = (\quad) \times (1 - \frac{\quad}{100}) + 18 (\frac{\quad}{100})$

$Ms =$

$Ts = \quad °F = \quad °R \ (°F + 460)$

$Ps = Pb + \frac{S.P.}{13.6} = (\quad) + \frac{\quad}{13.6}$

$Ps = \quad$ in. Hg

$\overline{\sqrt{\Delta P}} =$

$Vs = 85.49 \times Cp \times \overline{\sqrt{\Delta P}} \times \sqrt{\frac{Ts\ (°R)}{Ps \times Ms}}$

$Vs = 85.49 \times (\quad) \times (\quad) \times \sqrt{\quad}$

$Vs = \quad$ ft/s

$As = \quad ft^2$

$Qs = Vs \times As \times 60$ s/m

$Qs = \quad \times \quad \times 60$

$Qs = \quad$ acfm

$Qs_{std} = Qs \times 17.647 \times \frac{Ps}{Ts} \times (1 - \frac{\%H_2O}{100})$

$Qs_{std} = \quad \times 17.647 \times \frac{\quad}{\quad} \times (1 - \frac{\quad}{100})$

$Qs_{std} = \quad$ dscfm

FIELD DATA SHEET

Plant: Bethlehem Steel
Sampling Location: B11 Outlet
Run Number: 1 Date: 8-11-98
Pretest Leak Rate: 0.003 cfm @ 15 in. Hg.
Pretest Leak Check: Pitot: ✓ Orsat: N/A

Sample Type: M315 Operator: NN
Pbar: 29.7 Ps: -0.05" H_2O (-0.93)
CO2: ø O2: 20.9
Probe Length/Type: 6' glass Pitot #: 5E
Stack Diameter: 108" As: 63.62
K = 213 / 2.20

Nozzle ID: 0.22 Thermocouple #: T513
Assumed Bws: 5 Filter #: 080798-06
Meter Box #: 4 Y: 0.979 ΔH@: 1.872
Post-Test Leak Rate: 0.003 cfm @ 8 in. Hg.
Post-Test Leak Check: Pitot: ✓ Orsat: N/A

Traverse Point Number	Sampling Time (min)	Clock Time (24-hour clock)	Gas Meter Reading (Vm) ft³	Velocity Head (Δp) in H2O	Orifice Pressure Differential (ΔH) in H2O Desired	Orifice Pressure Differential (ΔH) in H2O Actual	Stack Temp. (Ts)	Temperature °F Probe	Temperature °F Filter	Impinger Temp. °F	Dry Gas Meter Temp. Inlet (Tm in °F)	Dry Gas Meter Temp. Outlet (Tm out °F)	Pump Vacuum (in. Hg)
1	NW ø		756.453										
1	ø	1037	756.453	0.97	NW ~~0.77~~ 2.06	NW ~~0.77~~ 2.1	129	262	267	67	77	77	4
	2	1039	758.4	0.1	0.21	0.21	131	254	267	65	77	77	2
	8	1045	760.1	0.1	0.21	0.21	131	256	263	60	79	79	2
	12	1050	761.4	0.1	0.21	0.21	128	257	264	59	82	81	2
	13	1051	761.7	0.95	2.02	2.0	128	253	269	58	80	80	4
	15	1053	763.3	0.1	0.21	0.21	131	259	267	58	78	79	2
	20	1058	764.5	0.1	0.21	0.21	131	257	265	57	77	78	2
	25	1103	766.0	0.1	0.21	0.21	129	248	251	57	76	76	2
	28	1106	767.0	0.92	1.96	2.0	137	262	253	57	78	78	4
	30	1108	768.1	0.1	0.21	0.21	132	252	255	57	78	78	2
2	34	1111	770.1	0.1	0.21	0.21	131	247	251	56	76	77	2
NW ø	39	1116	770.8	0.1	0.21	0.21	129	256	250	56	75	76	2
	40	1117	771.1	1.0	2.1	2.1	136	250	252	56	75	76	2
	42	1119	773.0	0.1	0.21	0.21	131	246	248	56	72	74	2
	47	1124	774.3	0.1	0.21	0.21	132	255	251	56	73	74	2
	50	1127	775.0	1.1	2.42	2.4	133	251	253	56	74	75	5
	52	1129	776.0	0.1	0.21	0.21	134	254	256	55	74	75	2
	57	1134	778.5	0.1	0.21	0.21	135	256	255	55	74	75	2
	60	1137	779.5	1.0	2.2	2.2	137	252	252	55	78	79	5
	62	1139	781.0	0.1	0.21	0.21	137	253	255	56	78	79	2
3	68	1145	782.5	0.08	0.18	0.18	137	259	253	56	79	78	2
	71	1148	783.5	0.87	1.89	1.9	138	254	251	56	78	78	4
	73	1150	785.1	0.07	0.15	0.15	138	253	255	56	78	79	2
	79	1156	786.4	0.07	0.15	0.15	139	253	252	56	77	78	2
	84	1201	787.5	0.07	0.15	0.15	139	251	254	56	77	77	2
	87	1204	788.4	0.95	2.0	2.0	133	253	256	56	77	78	

ΔVm= 132.109 $\overline{\sqrt{\Delta p}}$= _____ $\overline{\Delta H}$= _____ $\overline{Ts}$= _____ $\overline{Tm}$= 77

Plant Name: Bethlehem Steel **Test Date:** 8-11-98

Run Number: 1 M315 BH Outlet **Operator:** NW

Traverse Point Number	Sampling Time, (min.)	Clock Time (24-hour clock)	Gas Meter Reading (V_m) ft³	Velocity Head (ΔP_s) in. H_2O	Orifice Pres. Differential (ΔH) in. H_2O Desired	Actual	Stack Temp. °F (T_s)	Probe Temp. / Filter Temp. °F	Impinger Temp. °F	Dry Gas Meter Temp. Inlet ($T_{m_{in}}$) °F	Outlet ($T_{m_{out}}$) °F	Pump Vacuum In. Hg
4 3	89	1206	789.9	0.07	0.15	0.15	136	254 / 251	57	78	78	2
	94	1211	790.9	0.07	0.15	0.15	136	255 / 252	56	78	80	2
	98	1215	791.8	0.80	1.68	1.7	133	250 / 251	56	76	78	4
	100	1217	793.5	0.08	0.17	0.17	136	251 / 249	56	77	78	2
0.5" .003 4	102	1219	794.0	0.03	0.06	0.06	131	254 / 250	56	75	76	1
	107	1224	794.9	0.03	0.06	0.06	130	252 / 251	56	76	78	1
	109	1226	795.3	0.63	1.32	1.3	131	255 / 252	56	77	78	4
802,804	111	1228	796.9	0.05	0.10	0.10	130	254 / 251	57	77	78	1
802,714	116	1233	797.7	0.05	0.10	0.10	130	258 / 251	57	77	78	1
0.150	121	1238	798.7	0.05	0.10	0.10	130	256 / 253	58	78	79	1
	123	1240	799.3	0.60	1.26	1.3	126	255 / 254	58	78	78	3
	125	1242	800.7	0.05	0.10	0.10	126	254 / 253	58	77	79	1
	130	1247	801.5	0.05	0.10	0.10	125	253 / 253	58	77	79	1
3-1	136	1253	802.714	–	–	–	–	– / –	–	–	–	–
	136	1330	802.966	0.85	2.0	2.0	130	254 / 254	56	76	77	4
	138	1332	804.4	0.12	0.25	0.25	132	253 / 255	56	76	77	2
	143	1337	805.5	0.12	0.25	0.25	132	251 / 260	56	77	77	2
	145	1339	806.6	0.82	1.72	1.7	133	253 / 257	56	76	78	2
	147	1341	808.5	0.12	0.25	0.25	136	255 / 255	56	77	78	2
	153	1347	810.0	0.12	0.25	0.25	135	254 / 252	57	78	77	2
	154	1348	810.4	0.90	1.89	1.9	133	256 / 254	57	76	78	4
	159	1353	812.2	0.12	0.25	0.25	137	254 / 250	57	76	78	4
	10 (159)	1359	812.6	.90	1.9	1.9	136	245 / 250	56	76	78	4
	165	1359	814.6	.12	0.25	0.25	136	245 / 250	56	76	78	2

Plant Name: Bethlehem Steel **Test Date:** 8-11-98

Run Number: 1 M315 BH Outlet **Operator:** NW

Traverse Point Number	Sampling Time, (min.)	Clock Time (24-hour clock)	Gas Meter Reading (V_m) ft³	Velocity Head (ΔP_s) in. H_2O	Orifice Pres. Differential (ΔH) in. H_2O Desired	Orifice Pres. Differential (ΔH) in. H_2O Actual	Stack Temp. °F (T_s)	Probe Temp. / Filter Temp.° F	Impinger Temp. °F	Dry Gas Meter Temp. Inlet ($T_{m_{in}}$) °F	Dry Gas Meter Temp. Outlet ($T_{m_{out}}$) °F	Pump Vacuum In. Hg
3-2	171	1404	816.0	0.12	0.25	0.25	139	256 / 251	NW ~~[illegible]~~ 58	77	79	2
	183	1416	819.5	0.80	1.60	1.7	140	257 / 254	58	77	80	4
	185	1418	820.7	0.12	0.25	0.25	141	254 / 252	58	77	80	2
	194	1427	823.1	0.90	1.87	1.9	140	254 / 252	58	78	79	4
	196	1429	824.7	0.12	0.25	0.25	140	255 / 256	58	71	79	4
	202	1435	826.4	0.12	0.25	0.25	142	247 / 251	59	77	80	2
2	204	1437	827.1	0.12	0.25	0.25	141	248 / 250	59	78	80	2
	211	1444	828.8	0.12	0.25	0.25	138	257 / 255	59	77	79	2
	216	1449	830.3	0.12	0.25	0.25	134	256 / 259	59	77	78	2
	221	1454	831.6	0.12	0.25	0.25	132	255 / 254	59	76	77	2
*	230	1503	833.773	0.12	0.25	0.25		/				*
	230	1657	833.756	0.13	0.27	0.27	140	247 / 255		77	78	2
	234	1701	835.3	0.88	2.0	2.0	136	248 / 253	56	76	77	4
	236	1703	836.8	0.12	0.25	0.25	136	249 / 254	56	76	77	2
3	238	1705	838.1	0.12	0.25	0.25	137	251 / 252	56	76	77	2
	244	1711	838.9	0.94	1.97	2.0	135	250 / 251	57	77	78	4
	246	1713	840.5	0.12	0.25	0.25	136	251 / 253	57	77	77	2
	254	1721	842.6	0.12	0.25	0.25	136	254 / 252	57	78	77	2
	255	1722	843.1	0.94	1.97	2.0	137	255 / 256	57	78	75	4
	257	1724	844.4	0.12	0.25	0.25	136	253 / 252	57	78	75	2
	264	1731	846.4	0.12	0.25	0.25	138	256 / 254	57	77	78	2
	269	1736	847.8	0.90	1.88	1.9	138	251 / 252	57	77	78	2
	271	1738	849.6	0.12	0.25	0.25	138	251 / 253	57	77	78	2
	272	1739	850.1	Port	Change			/				

Plant Name: Bethlehem Steel **Test Date:** 8/11/98

Run Number: 1 M315 BH Outlet **Operator:** NN

Traverse Point Number	Sampling Time, (min.)	Clock Time (24-hour clock)	Gas Meter Reading (V_m) ft³	Velocity Head (ΔP_s) in. H_2O	Orifice Pres. Differential (ΔH) in. H_2O Desired	Orifice Pres. Differential (ΔH) in. H_2O Actual	Stack Temp. °F (T_s)	Probe Temp. / Filter Temp. °F	Impinger Temp. °F	Dry Gas Meter Temp. Inlet ($T_{m_{in}}$) °F	Dry Gas Meter Temp. Outlet ($T_{m_{out}}$) °F	Pump Vacuum In. Hg
2-1	272	1758	850.183	0.12	0.25	0.25	135	259 / 254	61	76	77	2
	275	1801	851.0	0.90	2.0	2.0	136	260 / 255	61	78	77	4
	277	1803	852.8	0.12	0.25	0.25	135	251 / 252	58	78	77	2
2	284	1810	855.1	0.12	0.25	0.25	135	253 / 254	58	78	77	2
	285	1811	855.5	0.90	2.0	2.0	131	251 / 250	58	76	77	4
	287	1813	857.0	0.12	0.25	0.25	130	251 / 250	58	76	77	2
	295	1821	859.2	0.92	1.93	1.5	128	253 / 251	58	76	78	4
3	297	1823	860.6	0.12	0.25	0.25	128	252 / 256	59	76	78	2
	304	1830	862.6	0.12	0.25	0.25	138	253 / 251	55	75	78	2
4	308	1834	864.[illegible]	0.12	0.25	0.25	134	259 / 252	59	76	80	2
	312	1838	864.7	0.90	1.89	1.5	134	259 / 253	55	76	80	4
	314	1840	866.3	0.12	0.25	0.25	135	256 / 251	55	76	80	2
	320	1846	867.884	-	-	-	-	- /	-	-	-	-
4-4	320	1910	867.916	0.14	0.29	0.29	133	244 / 241	58	75	78	2
	322	1912	870.2	1.1	2.3	2.3	130	241 / 244	56	75	78	5
	328	1918	871.8	0.16	0.34	0.34	130	241 / 245	56	75	78	5
	335	1925	874.6	0.16	0.34	0.34	131	240 / 242	56	75	78	5
	341	1931	876.8	0.96	2.0	2.0	130	241 / 244	56	75	76	5
	343	1934	878.4	0.16	0.34	0.34	130	242 / 244	56	75	76	5
	348	1939	879.7	0.16	0.34	0.34	132	246 / 240	58	75	76	5
	350	1940	880.5	1.1	2.3	2.3	130	251 / 246	56	74	77	5
	352	1942	882.4	0.16	0.34	0.34	131	250 / 250	56	74	75	2
	359	1949	884.9	0.90	2.0	2.0	132	251 / 246	57	75	75	4
	361	1951	886.7	0.16	0.34	0.34	131	248 / 247	57	75	75	2
	368	1958	888.929	-	-	-	-	- -	-	-	-	-

1810
1822
1834
1846

1910
1922
1934
1946

PACIFIC ENVIRONMENTAL SERVICES, INC

4700 Duke Drive, Suite 150
Mason, Ohio 45040
513.398.2556 FAX: 513.398.3342

Sample Train Recovery Data

Plant: EPA Coke Bethlehem Steel-Chesterton, Indiana Date: 8/11/98
Sampling Location: Baghouse Outlet
Sample Recovery Person: TA/RK/RD Field Team Leader: D. Schlichel
Sampling Method Type: M315
Run Number: B-O-M315-1 Impinger Train ID: N-9
Job Number: S506.000

Comments:

Front Half Data

Filter No.: 080798-06 Filter Media Type: Glass Fiber Filter
Filter Description: Small black particles (few), no loading
Filter No.: Filter Media Type:
Filter Description:

Back Half Data

Impinger Purge-
Start Time: — Flow Rate: — Stop Time: — Purge Gas: —

	Impinger 1 HPLC	Impinger 2	Impinger 3
Contents:	~~3M NaHCO3 / 2M Na2CO3~~	Same as Imp 1	Empty
Final Volume: ~~(ml)~~ g	626.6	722.2	587.41
Initial Volume: ~~(ml)~~ g	587.3	717.5	584.6
Net Volume: ~~(ml)~~ g	39.3	4.7	2.8

	Impinger 4	Impinger 5	Silica Gel
Contents:	—	—	Imp. 4
Final Volume: ~~(ml)~~ g	—	—	(g): 786.0
Initial Volume: ~~(ml)~~ g	—	—	(g): 763.0
Net Volume: ~~(ml)~~ g	—	—	(g): 23.0

Total Moisture Collected ~~(ml)~~ g: ~~49.6~~ 69.8
Description of Impinger catch: Clear

FIELD DATA SHEET

Plant: Bethlehem Steel
Sampling Location: Outlet
Run Number: B-O-315-2 Date: 8-12-98
Pretest Leak Rate: 0.007 cfm @ 16 in. Hg.
Pretest Leak Check: Pitot: ✓ Orsat: N/A

Sample Type: 315 Operator: NW
Pbar: 29.8 Ps: -0.09
CO2: 0 O2: 20.9
Probe Length/Type: 5' glass Pitot #: 5E
Stack Diameter: 108" As: 63.62
K = 2.8

Nozzle ID: 0.235 Thermocouple #: SH3
Assumed Bws: 5 Filter #: 080798-23
Meter Box #: 4 Y: 0.979 ΔH@: 1.872
Post-Test Leak Rate: 0.002 cfm @ 10 in. Hg.
Post-Test Leak Check: Pitot: ✓ Orsat: NA

Traverse Point Number	Sampling Time (min)	Clock Time (24-hour clock)	Gas Meter Reading (Vm) ft³	Velocity Head (Δp) in H2O	Orifice Pressure Differential (ΔH) in H2O Desired	Orifice Pressure Differential (ΔH) in H2O Actual	Stack Temp. (Ts)	Temperature °F Probe	Temperature °F Filter	Impinger Temp. °F	Dry Gas Meter Temp. Inlet (Tm in °F)	Dry Gas Meter Temp. Outlet (Tm out °F)	Pump Vacuum (in. Hg)
4-1	0		895.517										
	0	0929	895.517	0.12	0.33	0.33	143	253	252	66	78	79	2
	5	0934	897.6	0.88	2.5	2.5	139	244	266	65	78	79	5
	7	0936	992.1	0.12	0.33	0.33	139	244	261	65	78	79	5
	14	0943	901.4	0.12	0.33	0.33	142	246	256	65	79	80	2
	15	0944	901.7	0.90	2.52	2.5	140	245	254	64	79	81	5
	17	0946	903.8	0.12	0.33	0.33	140	247	256	62	79	81	2
	25	0954	906.9	0.90	2.52	2.5	144	250	261	60	78	81	5
	27	0956	908.6	0.12	0.33	0.33	145	252	260	60	78	81	2
2	30	0959	909.4	0.12	0.33	0.33	144	251	259	60	78	81	2
	36	0905	911.5	0.9	2.5	2.5	145	252	257	60	79	81	5
	38	0907	913.4	0.12	0.33	0.33	144	251	258	56	79	80	2
	43	1012	915.1	0.12	0.33	0.32	147	253	252	53	81	82	2
	45	1014	916.1	0.75	2.1	2.1	146	248	258	51	78	80	5
	47	1016	917.7	0.11	0.30	0.3	148	247	262	55	78	80	2
	58	1027	921.0	0.93	2.6	2.6	145	249	256	56	81	83	5
3	60	1029	922.7	0.11	0.30	0.30	144	248	257	56	81	83	2
	72	1041	926.7	0.95	2.67	2.7	142	254	257	55	78	80	5
	74	1043	928.8	0.10	0.28	0.28	142	256	256	55	78	80	2
	84	1053	932.2	0.95	2.67	2.7	146	252	254	59	80	81	5
	86	1055	933.9	0.10	0.28	0.28	145	259	256	60	80	81	[illegible]
4	90	1059	935.2	0.10	0.28	0.28	145	260	261	59	80	81	2
	106	1115	940.3	0.95	2.67	2.7	140	261	259	59	74	74	5
	108	1117	942.0	0.10	0.28	0.28	139	263	254	59	74	74	2
	115	1124	944.5	0.95	2.7	2.7	140	256	553	60	74	74	5
	117	1126	940.1	0.10	0.28	0.28	140	252	250	62	75	74	2
	120	1129	947.045										

ΔVm= 188.898 $\sqrt{\Delta p}$= _____ ΔH= _____ Ts= _____ Tm= _____

Plant Name: Bethlehem Steel **Test Date:** 8/12/98

Run Number: B-O-315-2 **Operator:** NN

Traverse Point Number	Sampling Time, (min.)	Clock Time (24-hour clock)	Gas Meter Reading (V_m) ft³	Velocity Head (ΔP_s) in. H_2O	Orifice Pres. Differential (ΔH) in. H_2O Desired	Orifice Pres. Differential (ΔH) in. H_2O Actual	Stack Temp. °F (T_s)	Probe Temp. / Filter Temp. °F	Impinger Temp. °F	Dry Gas Meter Temp. Inlet ($T_{m_{in}}$) °F	Dry Gas Meter Temp. Outlet ($T_{m_{out}}$) °F	Pump Vacuum In. Hg
-0.149 3-1	120	1141	917.194	0.10	0.28	0.28	140	253 / 244	62	74	76	2
	124	1145/1142	948.212	0.88	0.25	0.25	144	245 / 249	63	76	77	5
	126	1214	949.9	0.06	0.17	0.17	144	247 / 251	63	76	77	2
	147	1235	954.9	0.80	2.24	2.2	135	252 / 251	53	76	77	5
	149	1237	957.0	0.06	0.17	0.17	139	250 / 253	53	76	77	2
2	150	1238	957.3	0.06	0.17	0.17	138	251 / 255	53	76	77	2
	159	1247	959.9	0.75	2.1	2.1	134	256 / 257	53	76	77	5
	161	1249	961.2	0.06	0.17	0.17	134	255 / 256	53	76	77	2
	171	1259	963.4	0.82	2.3	2.3	135	254 / 257	53	76	78	5
	173	1301	965.0	0.09	0.25	0.25	136	256 / 251	53	76	78	2
3	181	1309	967.5	0.82	2.3	2.3	140	257 / 247	53	76	78	5
	183	1311	969.2	0.09	0.25	0.25	140	256 / 246	54	76	78	2
	192	1320	972.0	0.82	2.3	2.3	137	253 / 251	54	76	78	2
	194	1322	973.8	0.09	0.25	0.25	137	246 / 253	54	76	78	2
4	210	1338	978.2	0.09	0.25	0.25	135	247 / 256	59	76	78	2
	215	1343	979.8	0.75	2.10	2.1	128	248 / 257	55	76	77	5
	217	1345	981.1	0.10	0.28	0.28	125	251 / 254	56	76	77	2
	219	1347	985.1	0.75	2.1	2.1	127	243 / 247	56	76	77	5
		1403	988.8	0.10	0.25	0.25	129	247 / 245	57	74	77	2
		1405	989.2	0.72	1.9	1.9	130	242 / 245	56	75	78	5
Leak 0.002 cf @ 8" 1-1	240	1409	990.325	0.09	0.25	0.25	132	242 / 245	56	75	78	2
	240	1419	990.325	0.09	0.25	0.25	133	251 / 249	58	76	77	2
	252	1430	993.782	0.10	0.28	0.28	132	253 / 250	64	74	75	2
	258	1542	996.0	0.82	2.3	2.3	133	252 / 247	55	74	75	5

stop test

270
300
320
260

Plant Name: Bethlehem Steel **Test Date:** 8-12-98

Run Number: B-O-315-2 **Operator:** NN

Traverse Point Number	Sampling Time, (min.) / Clock Time (24-hour clock)	Gas Meter Reading (V_m) ft³	Velocity Head (ΔP_s) in. H_2O	Orifice Pres. Differential (ΔH) in. H_2O Desired	Orifice Pres. Differential (ΔH) in. H_2O Actual	Stack Temp. °F (T_s)	Probe Temp. / Filter Temp.° F	Impinger Temp. °F	Dry Gas Meter Temp. Inlet ($T_{m_{in}}$) °F	Dry Gas Meter Temp. Outlet ($T_{m_{out}}$) °F	Pump Vacuum In. Hg
1	259 / 1544	997.3	0.10	0.28	0.28	137	253 / 252	56	74	75	2
	267 / 1653	999.8	0.86	2.4	2.4	136	254 / 249	55	73	75	2
2	269 / 1654	1002.0	0.10	0.28	0.28	139	253 / 258	55	73	74	2
	277 / 1602	1004.6	0.70	1.96	2.0	139	247 / 245	55	75	77	5
	279 / 1604	1006.3	0.10	0.28	0.28	137	250 / 252	56	75	77	2
	290 / 1615	1009.4	0.70	1.96	2.0	135	254 / 251	58	75	76	5
	292 / 1617	1010.7	0.10	0.28	0.28	135	251 / 256	58	75	76	2
	299 / 1624	1013.1	0.77	2.16	2.2	134	255 / 253	54	75	77	5
3	301 / 1626	1014.6	0.10	0.28	0.28	134	251 / 252	53	75	77	2
	311 / 1635	1019.7	.80	2.2	2.2	134	251 / 252	55	76	77	5
	313 / 1636	1021.2	.10	0.28	0.28	136	251 / 252	53	76	77	2
	320 / 1645	1021.7	0.80	2.2	2.2	137	254 / 256	53	76	77	5
4	322 / 1647	1023.3	0.10	0.28	0.28	133	252 / 254	53	76	77	2
	347 / 1712	1031.6	0.75	2.1	2.1	122	249 / 251	59	78	78	5
	349 / 1714	1033.2	0.10	0.28	0.28	124	250 / 253	59	78	78	2
	358 / 1722	1035.9	0.94	2.63	2.6	125	251 / 254	57	77	78	5
	360 / 1724	1037.5	0.10	0.28	0.28	125	256 / 254	57	77	78	2
1-1	360 / 1735	1037.8	0.14	0.39	0.39	136	257 / 256	64	78	79	2
	367 / 1742	1040.1	0.9	2.5	2.5	136	253 / 251	55	78	78	5
	369 / 1744	1042.1	0.13	0.36	0.36	136	256 / 250	53	78	78	2
	377 / 1752	1044.8	0.80	2.0	2.0	136	253 / 251	56	77	77	5
	379 / 1754	1046.7	0.13	0.36	0.36	136	256 / 253	55	77	77	2
	388 / 1803	1050.0	0.80	2.0	2.0	136	253 / 263	57	78	79	5
2	399 / 1705	1051.6	0.13	0.36	0.36	136	251 / 260	57	78	79	2

-0.3

0.009
@ 5

Plant Name: Bethlehem Steel **Test Date:** 8-12-98

Run Number: B-O-315-2 **Operator:** NN

Traverse Point Number	Sampling Time, (min.)	Clock Time (24-hour clock)	Gas Meter Reading (V_m) ft^3	Velocity Head (ΔP_s) in. H_2O	Orifice Pres. Differential (ΔH) in. H_2O Desired	Orifice Pres. Differential (ΔH) in. H_2O Actual	Stack Temp. °F (T_s)	Probe Temp. / Filter Temp. °F	Impinger Temp. °F	Dry Gas Meter Temp. Inlet ($T_{m_{in}}$) °F	Dry Gas Meter Temp. Outlet ($T_{m_{out}}$) °F	Pump Vacuum In. Hg
2	398	1813	1052.1	0.86	2.4	2.4	135	247 / 246	60	77	78	5
	400	1815	1053.8	0.11	0.30	0.30	135	249 / 250	59	77	78	2
	419	1834	1059.9	0.85	2.4	2.4	135	256 / 249	58	77	78	5
	421	1836	1061.7	0.11	0.30	0.30	135	259 / 253	57	77	78	2
3	431	1846	1065.6	0.73	2.0	2.0	136	256 / 247	56	77	81	5
	433	1848	1066.6	0.11	0.30	0.30	135	251 / 249	56	77	80	2
	440	1855	1069.6	0.76	2.12	2.1	135	253 / 247	56	77	80	5
	442	1857	1070.5	0.11	0.30	0.30	132	256 / 249	58	77	80	2
	451	1906	1073.1	0.72	2.0	2.0	137	256 / 247	58	77	80	5
	453	1908	1075.0	0.11	0.30	0.30	137	257 / 248	58	77	80	2
	460	1915	1077.4	.90	2.5	2.5	132	256 / 250	56	77	80	5
	462	1917	1078.9	.11	.30	.30	132	257 / 251	58	77	80	2
	480	1935	1089.364	—	—	—	—	— /	—	—	—	—

PACIFIC ENVIRONMENTAL SERVICES, INC

4700 Duke Drive, Suite 150
Mason, Ohio 45040
513.398.2556 FAX: 513.398.3342

Sample Train Recovery Data

Plant: Bethlehem Steel- EPA Coke Chesterton, Ind. Date: 8/13/98

Sampling Location: Baghouse Outlet

Sample Recovery Person: RK/RD Field Team Leader: D. Schaffel

Sampling Method Type: EPA 315

Run Number: B-0-315-2 Impinger Train ID: N-5

Job Number: 5506.000

Comments:

Front Half Data

Filter No.: 080798-~~19~~ 23 (AK) Filter Media Type: Glass Fiber Filter

Filter Description: Clean - no loading - - small particulate grains

Filter No.: ~~080798~~ Not used Filter Media Type:

Filter Description:

Back Half Data

Impinger Purge-

Start Time: Flow Rate: Stop Time: Purge Gas:

	Impinger 1	Impinger 2	Impinger 3
Contents:	HPLC H_2O	HPLC H_2O	Empty
Final Volume: (ml)	627.7	715.8	561.0
Initial Volume: (ml)	589.2	706.6	557.2
Net Volume: (ml)	38.5	9.2	3.8

	Impinger 4	Impinger 5	Silica Gel
Contents:	N/A	N/A	5:1 Gel
Final Volume: (ml)	—	—	(g): 910.7
Initial Volume: (ml)	—	—	(g): 875.4
Net Volume: (ml)	—	—	(g): 35.5

Total Moisture Collected (ml): 87.0 ✓

Description of Impinger catch: Clear

JL ✓

FIELD DATA SHEET

Plant: Bethlehem Steel
Sampling Location: B.H. outlet
Run Number: B-0-315-3 Date: 8-13-98
Pretest Leak Rate: 0.002 cfm @ 15 in. Hg.
Pretest Leak Check: Pitot: ✓ Orsat: N/A

Sample Type: M315 Operator: NN
Pbar: 29.8 Ps: -.50
CO2: 0 O2: 20.9
Probe Length/Type: 5' glass Pitot #: 5C
Stack Diameter: 108" As: 63.62
K = 2.8

Nozzle ID: 0.235 Thermocouple #: SH7
Assumed Bws: 5 Filter #: ~~B-0~~ 080798-22
Meter Box #: 4 Y: 0.979 ΔH@: 1.872
Post-Test Leak Rate: 0.004 cfm @ 8 in. Hg.
Post-Test Leak Check: Pitot: ✓ Orsat: N/A

Traverse Point Number	Sampling Time (min)	Clock Time (24-hour clock)	Gas Meter Reading (Vm) ft³	Velocity Head (Δp) in H2O	Orifice Pressure Differential (ΔH) in H2O Desired	Orifice Pressure Differential (ΔH) in H2O Actual	Stack Temp. (Ts)	Temperature °F Probe	Temperature °F Filter	Impinger Temp. °F	Dry Gas Meter Temp. Inlet (Tm in °F)	Dry Gas Meter Temp. Outlet (Tm out °F)	Pump Vacuum (in. Hg)
4-1	-	-	-										
	0	0840	86.984	0.13	0.36	0.36	123	249	253	60	77	76	2
	4	0844	88.4	0.93	2.6	2.6	120	250	247	53	75	76	5
	6	0846	90.2	0.14	0.39	0.39	122	253	250	51	75	76	2
	16	0856	93.8	0.95	2.6	2.6	121	250	249	50	76	78	5
	18	0858	95.7	0.14	0.39	0.39	121	251	249	51	77	78	2
	27	0907	98.9	0.90	2.52	2.5	126	253	247	52	74	77	5
	29	0909	100.9	0.14	0.39	0.39	127	256	249	53	74	77	2
2	30	0910	101.2	0.14	0.39	0.39	127	255	247	52	74	77	2
	~~38~~ 42	0922	105.6	0.90	2.5	2.5	129	252	250	55	75	80	5
	~~40~~ 44	0924	107.2	0.14	0.39	0.39	129	251	251	56	77	81	2
	~~48~~ 52	0932	110.1	0.86	2.4	2.4	130	254	256	56	77	81	5
	~~50~~ 54	0934	111.6	0.14	0.39	0.39	130	252	254	56	77	81	2
3	63	0943	114.7	0.90	2.5	2.5	131	253	255	57	77	80	5
	65	0945	116.5	0.14	0.39	0.39	134	256	255	57	77	80	2
	72	0952	119.0	0.74	2.07	2.1	136	249	249	59	76	80	5
	74	0954	120.6	0.12	0.34	0.34	135	251	248	59	76	80	2
	82	1002	123.2	0.85	2.38	2.4	137	250	250	56	79	82	5
	84	1004	125.1	0.12	0.34	0.34	138	248	251	50	78	82	2
4	90	1010	127.6	0.12	0.34	0.34	139	249	249	51	76	78	2
	92	1012	128.0	0.86	2.4	2.4	138	251	253	51	77	80	5
	94	1014	129.5	0.12	0.34	0.34	138	253	251	51	76	80	2
	118	1037	137.5	0.84	2.35	2.4	129	251	252	52	83	84	5
	119	1038	139.4	0.12	0.34	0.34	131	255	250	56	85	88	2
	120	1040	139.668	-	-	-	-	-	-	-	-	-	-
3-1	120												

-0.119

ΔVm= 190.238 $\overline{\sqrt{\Delta p}}$= _____ $\overline{\Delta H}$= _____ $\overline{Ts}$= _____ $\overline{Tm}$= 80

Plant Name: Bethlehem Steel **Test Date:** 8-13-98

Run Number: B-O-315-3 **Operator:** NN

Traverse Point Number	Sampling Time, (min.)	Clock Time (24-hour clock)	Gas Meter Reading (V_m) ft³	Velocity Head (ΔP_s) in. H_2O	Orifice Pres. Differential (ΔH) in. H_2O Desired	Orifice Pres. Differential (ΔH) in. H_2O Actual	Stack Temp. °F (T_s)	Probe Temp. / Filter Temp. °F	Impinger Temp. °F	Dry Gas Meter Temp. Inlet ($T_{m_{in}}$) °F	Dry Gas Meter Temp. Outlet ($T_{m_{out}}$) °F	Pump Vacuum In. Hg
3-1	120	1052	139.487	0.06	0.17	0.17	133	245 / 250	63	82	82	2
	126	1058	141.2	0.75	2.10	2.1	135	250 / 256	59	81	81	5
	128	1100	142.7	0.07	0.20	0.20	136	251 / 254	58	81	81	2
	137	1109	145.3	0.80	2.24	2.2	140	250 / 252	58	81	83	5
	139	1111	146.1	0.07	0.20	0.20	141	253 / 256	59	82	83	2
	147	1119	149.0	0.78	2.2	2.2	145	250 / 252	58	82	83	5
	149	1121	150.4	0.10	0.28	0.28	147	251 / 251	58	82	83	2
2	150	1122	150.6	0.10	0.28	0.28	146	253 / 256	58	82	83	2
	166	1138	155.8	0.75	2.10	2.10	142	251 / 257	58	82	84	5
	168	1140	157.4	0.10	0.28	0.28	140	253 / 257	59	82	83	2
	176	1148	159.1	0.70	1.96	2.0	137	251 / 257	59	77	78	5
	178	1150	161.4	0.10	0.28	0.28	137	256 / 256	60	77	78	2
3	180	1152	162.1	0.10	0.28	0.28	138	255 / 253	60	77	78	2
	187	1159	164.4	.80	2.2	2.2	139	256 / 254	60.	78	80	5
	189	1201	166.2	.06	.15	.15	139	254 / 253	60	77	80	2
	196	1208	168.0	0.80	2.2	2.2	139	255 / 256	60	80	81	5
	198	1210	169.6	0.08	0.22	0.22	139	253 / 255	60	80	81	2
4.	225	1237	177.2	0.80	2.2	2.2	124	256 / 251	60	77	79	5
	227	1239	179.1	0.08	0.22	0.22	125	257 / 256	60	77	75	2
	235	1247	181.4	Nozzle 1.0	2.8	2.8	125	254 / 253	60	78	81	5
	237	1249	182.9	0.08	0.22	0.22	125	251 / 252	60	78	81	2
	240	1252	183.802	–	–	–	–	– / –	–	–	–	–
								/				
								/				

0.002 cf
-0.221

Plant Name: Bethlehem Steel **Test Date:** 8-13-98

Run Number: B-O-315-3 **Operator:** NN

Traverse Point Number	Sampling Time, (min.)	Clock Time (24-hour clock)	Gas Meter Reading (V_m) ft³	Velocity Head (ΔP_s) in. H_2O	Orifice Pres. Differential (ΔH) in. H_2O Desired	Orifice Pres. Differential (ΔH) in. H_2O Actual	Stack Temp. °F (T_s)	Probe Temp. / Filter Temp. °F	Impinger Temp. °F	Dry Gas Meter Temp. Inlet ($T_{m_{in}}$) °F	Dry Gas Meter Temp. Outlet ($T_{m_{out}}$) °F	Pump Vacuum In. Hg
2-1	240	1238	184.023	0.09	0.25	0.25	145	249 / 251	62	78	80	1
	242	1240	184.5	0.86	2.4	2.4	144	253 / 252	60	78	80	3
	244	1242	186.3	0.09	0.25	0.25	144	251 / 253	58	79	81	1
	253	1351	188.8	0.86	2.38	2.4	148	253 / 256	50	79	81	3
	255	1353	190.6	0.09	0.25	0.25	147	251 / 255	50	79	81	1
	266	1404	193.9	0.95	2.66	2.7	144	255 / 251	51	79	81	3
	268	1406	195.8	0.09	0.23	0.25	144	256 / 253	52	79	81	1
2	270	1408	196.4	0.09	0.25	0.25	144	255 / 253	52	79	81	1
	283	1421	198.6	0.70	2.52	2.5	143	255 / 256	52	79	81	3
	285	1423	200.2	0.09	0.25	0.25	143	260 / 257	52	79	81	1
3	333	1511	214.3	0.87	2.44	2.4	118	252 / 248	60	78	80	3
	335	1513	216.1	0.09	0.25	0.25	118	253 / 246	60	78	80	1
	342	1520	218.1	.85	2.4	2.4	123	251 / 250	49	78	80	3
	344	1522	220.0	.09	0.25	0.25	125	252 / 247	49	78	80	1
	353	1530	222.5	.86	2.4	2.4	133	252 / 251	49	77	80	3
	355	1532	224.3	.09	0.25	0.25	134	252 / 252	49	72	80	1
-0.271			225.870									

1 360
2 390
3 420
4 450
450

Plant Name: Bethlehem Steel **Test Date:** 8-13-98

Run Number: B-O-315-3 **Operator:** NN

Traverse Point Number	Sampling Time, (min.)	Clock Time (24-hour clock)	Gas Meter Reading (V_m) ft³	Velocity Head (ΔP_s) in. H_2O	Orifice Pres. Differential (ΔH) in. H_2O Desired	Orifice Pres. Differential (ΔH) in. H_2O Actual	Stack Temp. °F (T_s)	Probe Temp. / Filter Temp. °F	Impinger Temp. °F	Dry Gas Meter Temp. Inlet ($T_{m_{in}}$) °F	Dry Gas Meter Temp. Outlet ($T_{m_{out}}$) °F	Pump Vacuum In. Hg
1-1	360	1548	226.141	0.09	0.25	0.25	143	254 / 247	64	78	80	1
	362	1550	226.8	0.75	2.1	2.1	142	251 / 249	61	78	80	3
	364	1552	228.3	0.09	0.25	0.25	142	253 / 252	60	78	80	1
	372	1600	230.8	0.71	1.98	2.0	144	250 / 251	56	78	80	3
	374	1602	232.4	0.10	0.28	0.28	143	247 / 250	53	78	80	1
	382	1610	234.8	0.85	2.38	2.4	145	252 / 248	56	81	83	3
	384	1612	236.7	0.10	0.28	0.28	145	251 / 249	57	81	83	1
2	391	1619	238.9	.85	2.1	2.1	142	253 / 249	58	82	84	3
	392	1621	239.9	.12	.30	.30	142	252 / 248	59	81	80	1
	408	1636	246.7	0.85	2.1	2.1	139	251 / 247	59	80	81	3
	410	1638	248.1	0.12	0.30	0.30	139	250 / 251	59	80	81	1
	419	1647	251.0	0.92	2.58	2.6	136	251 / 253	56	80	81	3
3	421	1649	252.7	0.12	0.30	0.30	135	250 / 249	56	80	81	1
	436	1704	257.2	0.92	2.6	2.6	133	251 / 250	56	80	81	3
	438	1706	259.0	0.12	0.30	0.30	133	256 / 255	55	80	80	1
	445	1713	261.3	1.0	2.8	2.8	134	255 / 252	56	79	81	3
	447	1715	263.1	0.13	0.36	0.36	133	252 / 255	56	79	81	1
4	450	1718	264.	0.13	0.36	0.36	133	251 / 256	56	79	81	1
	455	1723	265.9	1.0	2.8	2.8	134	256 / 255	57	79	81	3
	457	1725	267.8	0.13	0.36	0.36	134	252 / 259	57	80	81	1
	470	1738	272.3	0.85	2.38	2.4	134	251 / 261	56	80	81	3
	472	1740	273.9	0.13	0.36	0.36	134	253 / 257	56	80	81	1
	479	1747	276.3	0.85	2.38	2.4	134	251 / 260	56	80	81	3
	481	1749	277.833	0.13	0.36	0.36	134	252 / 261	55	80	81	1

PACIFIC ENVIRONMENTAL SERVICES, INC

4700 Duke Drive, Suite 150
Mason, Ohio 45040
513.398.2556 FAX: 513.398.3342

Sample Train Recovery Data

Plant: EPA Coke Bethlehem Steel Chesterton, IN Date: 8/14/98
Sampling Location: Baghouse Outlet
Sample Recovery Person: RD RK Field Team Leader: DS
Sampling Method Type: M 315
Run Number: B-O-315-3 Impinger Train ID: N-2
Job Number: 5506.000

Comments:

Front Half Data

Filter No.: 080798-22 Filter Media Type: Tared Treated glass fiber
Filter Description: very little
Filter No.: — Filter Media Type: —
Filter Description: —

Back Half Data

Impinger Purge-
Start Time: — Flow Rate: — Stop Time: — Purge Gas: —

	Impinger 1	Impinger 2	Impinger 3
Contents:	HPLC H_2O	HPLC H_2O	Empty
Final Volume: ~~(ml)~~ g	627.7	722.2	457.1
Initial Volume: ~~(ml)~~ g	586.1	716.4	453.4
Net Volume: ~~(ml)~~ g	41.6	5.8	3.7

	Impinger 4	Impinger 5	Silica Gel
Contents:	—	—	Sil Gel
Final Volume: (ml)	—	—	(g): 792.0
Initial Volume: (ml)	—	—	(g): 760.0
Net Volume: (ml)	—	—	(g): 32.0

Total Moisture Collected ~~(ml)~~: (g) 83.1 ✓
Description of Impinger catch: Clear

52 ✓

FIELD DATA SHEET

Plant: Bethlehem Steel
Sampling Location Baghouse Outlet
Run Number: B-0-M3B Date: 8-14-98
Pretest Leak Rate: .000 cfm @ 15 in. Hg.
Pretest Leak Check: Pitot: N/A Orsat: —

Sample Type: 3/5 Operator: DDH
Pbar: 29.7 Ps: -0-
CO2: 0 O2: 20.9
Probe Length/Type: 5'/S-Type Pitot #: 4E
Stack Diameter: NA As: NA

Nozzle ID: .215 Thermocouple #: 4E
Assumed Bws: 5 Filter #: 080798-24
Meter Box #: MB-2 Y: 1.002 ΔH@: 1.797
Post-Test Leak Rate: .002 cfm @ 15 in. Hg.
Post-Test Leak Check: Pitot: N/A Orsat: —

Traverse Point Number	Sampling Time (min)	Clock Time (24-hour clock)	Gas Meter Reading (Vm) ft³	Velocity Head (Δp) in H2O	Orifice Pressure Differential (ΔH) in H2O		Stack Temp. (Ts)	Temperature °F		Impinger Temp. °F	Dry Gas Meter Temp.		Pump Vacuum (in. Hg)	
					Desired	Actual		Probe	Filter		Inlet (Tm in °F)	Outlet (Tm out °F)		
		0	377.795											
		11:00	377.835	N/A	N/A	N/A	N/A	252	255	80	N/A	N/A		15 Lpm
		1115	378.005	N/A	N/A	N/A	N/A	252	255	80	↓	↓		
		1130	378.165	N/A	N/A	N/A	N/A	252	255	80	↓	↓		~~15 Lpm~~

ΔVm= _____ $\overline{\sqrt{\Delta p}}$= _____ $\overline{\Delta H}$= _____ $\overline{Ts}$= _____ $\overline{Tm}$= _____

PACIFIC ENVIRONMENTAL SERVICES, INC

4700 Duke Drive, Suite 150
Mason, Ohio 45040
513.398.2556 FAX: 513.398.3342

Sample Train Recovery Data

Plant: EPA Coke Bethlehem Steel Date: 8/14/98
Sampling Location: Baghouse Outlet
Sample Recovery Person: RWA Field Team Leader: DS
Sampling Method Type: M315
Run Number: S506.000 Impinger Train ID: N-2
Job Number: D-O-315-FB

Comments: Field Blank

Front Half Data

Filter No.: 080798-24 Filter Media Type: Tared Treated Glass fil..
Filter Description: no particulate
Filter No.: — Filter Media Type: —
Filter Description: —

Back Half Data

Impinger Purge- —
Start Time: — Flow Rate: — Stop Time: — Purge Gas: —

	Impinger 1	Impinger 2	Impinger 3
Contents:	H_2O	H_2O	Empty
Final Volume: (ml)	585.7/585.4	717.2	455.4
Initial Volume: (ml)	703.3 RW 02	717.3	455.3
Net Volume: (ml)	-0.1	-0.1	0.1

	Impinger 4	Impinger 5	Silica Gel
Contents:	—	—	Sil Gel
Final Volume: (ml)	—	—	(g): 703.3
Initial Volume: (ml)	—	—	(g): 703.3
Net Volume: (ml)	—	—	(g): 0.0

Total Moisture Collected (ml): -0.1
Description of Impinger catch: clear

34 min pt.

K = 2.31

FIELD DATA SHEET

Plant: Coke Bethl. Steel (EPA)
Sampling Location: B.H. Outlet
Run Number: B-O-M29-1 Date: 8-11-98
Pretest Leak Rate: 0.008 cfm @ 15 in. Hg.
Pretest Leak Check: Pitot: ✓ Orsat: ✓

Sample Type: CARB 429 Operator: SB
Pbar: 29.7 Ps: ~~-.4~~ -.65
CO2: 0 O2: 21
Probe Length/Type: 5' Pitot #: 5B
Stack Diameter: 108" As: 63.6

Nozzle ID: 0.22 Thermocouple #: 5B
Assumed Bws: 5 Filter #: teflon
Meter Box #: 2 Y: 1.002 ΔH@: 1.797
Post-Test Leak Rate: .012 cfm @ 7 in. Hg.
Post-Test Leak Check: Pitot: ✓ Orsat: ✓

K = 2.05

	Traverse Point Number	Sampling Time (min)	Clock Time (24-hour clock)	Gas Meter Reading (Vm) ft³	Velocity Head (Δp) in H2O	Orifice Pressure Differential (ΔH) in H2O Desired	Orifice Pressure Differential (ΔH) in H2O Actual	Stack Temp. (Ts)	Temperature °F Probe	Temperature °F Filter	Impinger Temp. °F	Dry Gas Meter Temp. Inlet (Tm in °F)	Dry Gas Meter Temp. Outlet (Tm out °F)	Pump Vacuum (in. Hg)	°F XAD
Port 1	1	0	1037	816.865											
		1	1038	818.1	.14	.30	.30	130	240	242	60	79	79	5	59
		3	1040	819.1	.95	2.0	2.0	130	241	242	59	79	79	5	59
		8	1045	826.7	.14	.30	.30	130	236	251	59	79	79	5	59
		13	1050	822.2	.14	.30	.30	130	245	255	60	79	78	8	57
		14	1051	826.8	1.11	1.88	1.88	129	252	261	62	80	79	6	57
		19	1056	828.0	.11	.23	.23	129	257	263	57	80	79	1	57
		24	1101	830.0	.14	.30	.30	129	256	251	58	79	80	1	57
		29	1106	832.1	.98	2.1	2.1	128	252	264	58	80	80	1	59
		34	1111		.12	2.1	2.1	127	252	262	56	79	80	1	58
	2				.20	~~.65~~	~~.3~~	128	259	246	58	79	80	1	57
		40	1116	836.3	.9	1.9	1.9	127	256	254	58	78	79	1	57
		45	1121	838.0	.20	.40	.40	130	253	260	57	78	78	1	58
		50	1126	841.8	.99	2.0	2.0	130	255	258	53	79	78	7	58
		55	1131	843.4	.11	.23	.23	134	247	261	55	79	78	1	57
		60	1136	843.6	.10	.21	.21	134	247	261	59	81	80	1	57
		100	1137	845.6	.95	2.0	2.0	133	247	257	60	80	82	5	57
	3	105.00	1142	846.9	.11	.23	.23	134	247	266	60	80	81	1	59
		110.00	1147	847.2	.09	.19	.19	135	249	258	60	79	80	1	58
		111.00	1148	849.4	1.0	2.0	2.0	137	253	260	60	79	79	7	60
		116.00	1153	851.0	.11	.23	.23	138	252	253	60	80	80	1	59
		121.00	1158	852.5	.14	.30	.30	137	258	256	60	80	80	1	59
		126.00	1203	853.1	.12	.25	.25	136	257	251	60	79	80	1	60
		127.00	1204	857.4	1.0	2.1	2.1	134	253	257	57	80	80	7	59
		132.00	1209	858.2	.10	.26	.26	135	252	250	57	80	83	1	59
		136.00	1214	858.8	.09	.19	.19	132	249	256	60	79	81	1	60
		137	1215	~~858.8~~ 861.2	.85	1.8	1.8	131	248	258	59	80	82	7	60

ΔVm = 15 @ .008 $\overline{\sqrt{\Delta p}}$ = _____ $\overline{\Delta H}$ = _____ $\overline{Ts}$ = _____ $\overline{Tm}$ = _____

Plant Name: Coke Beth. Steel **Test Date:** 8-11-98

Run Number: B-D-M429-1 **Operator:** SB

Traverse Point Number	Sampling Time, (min.)	Clock Time (24-hour clock)	Gas Meter Reading (V_m) ft³	Velocity Head (ΔP_s) in. H_2O	Orifice Pres. Differential (ΔH) in. H_2O Desired	Orifice Pres. Differential (ΔH) in. H_2O Actual	Stack Temp. °F (T_s)	Probe Temp. / Filter Temp. °F	Impinger Temp. °F	Dry Gas Meter Temp. Inlet ($T_{m_{in}}$) °F	Dry Gas Meter Temp. Outlet ($T_{m_{out}}$) °F	Pump Vacuum In. Hg	xAD
4	142.00	1220	862.2	.12	.25	.25	132	246 / 270	60	79	80	1	62
	146.00	1225	863.2	.09	.19	.19	132	246 / 255	60	79	79	1	60
	149.00	1229	866.7	.70	1.5	1.5	132	246 / 259	59	79	80	1	60
	154.00	1232	868.1	.10	.21	.21	132	241 / 261	59	79	80	1	60
	159.00	1236	870.0	.10	.21	.21	133	242 / 264	64	78	79	1	60
	203	1240	872.5	.60	1.3	1.3	130	248 / 259	64	79	79	1	60
	208.00	1245	874.0	.11	.23	.23	131	242 / 257	64	79	80	1	60
	213.00	1250	874.754	.10	.21	.21	129	250 / 251	63	79	78	1	60
	SB ~~216.00~~	~~1253~~						/		~~78~~	SB ~~79~~		
		1330	877.364					/					
Port 2	05	1335	879.364	.12	.25	.25	128	243 / 263	63	78	79	1	60
(1)	10	1340	880.7	.11	.23	.23	132	245 / 263	60	78	78	1	58
	11	1341	882.9	.83	1.7	1.7	130	240 / 263	60	78	78	1	58
	16	1346	884.7	.12	.25	.25	134	238 / 265	60	78	78	1	58
	21	1351	886.5	.81	1.7	1.7	135	239 / 252	60	77	78	1	58
	25	1355	888.4	.13	.30	.30	134	235 / 257	60	78	77	1	58
	30.00	1400	890.2	.87	1.8	1.8	134	237 / 265	60	78	78	1	58
	35.00	1405	892.6	.13	.27	.27	138	233 / 256	60	78	78	1	60
(2)	40.00	1410	893.4	.13	.27	.27	142	242 / 261	60	78	79	1	60
	45.00	1415	894.7	.13	.27	.27	140	248 / 256	60	77	80	1	60
	50.00	1420	896.5	.82	1.7	1.7	139	248 / 265	60	78	80	1	56
	55.00	1425	898.4	.11	.23	.23	140	242 / 265	60	79	80	1	58
	60.00	1430	900.8	.70	1.5	1.5	140	237 / 263	60	78	79	1	58
	105.00	1435	902.0	.10	.21	.21	141	238 / 255	59	79	80	1	60

@9" .002

77.363

84.754

DS-.56

Plant Name: Coke Bethl. Steel (EPA) **Test Date:** 8-11-98

Run Number: B-O-m429-1 **Operator:** SB

Traverse Point Number	Sampling Time, (min.)	Clock Time (24-hour clock)	Gas Meter Reading (V_m) ft³	Velocity Head (ΔP_s) in. H_2O	Orifice Pres. Differential (ΔH) in. H_2O Desired	Orifice Pres. Differential (ΔH) in. H_2O Actual	Stack Temp. °F (T_s)	Probe Temp. / Filter Temp. °F	Impinger Temp. °F	Dry Gas Meter Temp. Inlet ($T_{m_{in}}$) °F	Dry Gas Meter Temp. Outlet ($T_{m_{out}}$) °F	Pump Vacuum In. Hg	XAD
(3)	110.00	1440	902.0	.09	.18	.18	140	239 / 255	60	79	80	1	58
	115.00	1445	904.0	.06	.13	.13	109	235 / 254	60	78	80	1	58
	120.00	1450	905.3	.04	.09	.09	100	238 / 254	60	79	80	1	58
	125.00	1455	906.2	.04	.09	.09	104	234 / 263	59	77	79	1	58
	130.00	1500	907.020	.04	.09	.09	101	235 / 261	59	79	79	1	
	SB ~~130.00~~ +	~~1503~~	909.109			trans problems.		/					
	133.00	1657	911.2	.11	.23	.23	138	253 / 262	60	77	77	1	58
	138.00	1702 SB	914.2	.94	2.0	2.0	136	234 / 261	60	77	78	1	58
(4)	143.00 (10)	~~1657~~	915.8	.13	.27	.27	136	230 / 258	58	77	79	1	58
	147.00	1711	916.9	.12	.25	.25	136	228 / 262	60	77	78	1	58
	152.00	1716	918.8	.90	1.9	1.9	135	234 / 255	60	79	78	1	58
	157.00	1721	920.0	.14	.30	.30	137	231 / 258	59	77	79	1	58
	158.00	1722	921.1	.12	.25	.25	137	236 / 262	59	78	79	1	58
	203.00	1727	924.0	.84	1.8	1.8	137	236 / 257	60	77	80	1	58
	208.00	1732	925.2	.14	.30	.30	139	236 / 264	60	79	80	1	58
	213.00	1737	926.0	.12	.25	.25	137	232 / 263	60	78	80	1	58
	217.00	1741	928.90	.84	1.8	1.8	132	233 / 266	60	78	80	1	58
Port #3	0	1758	924.618				~~136~~	/					
(1)	1	1759	930.2	.11	.23	.23	136	236 / 261	60	78	79	1	58
	6	1804	933.5	.81	1.7	1.7	134	245 / 258	60	79	79	1	58
	11	1809	935.3	.11	.23	.23	136	239 / 257	58	78	78	1	~~58~~ SB 59
(2)	16	1814	937.4	.90	1.9	1.9	134	245 / 254	60	78	79	1	59
	21	1819	939.8	.13	.27	.27	135	245 / 266	60	78	80	1	59
	22	1820	939.5	.12	.25	.25	135	237 / 265	60	79	78	1	58

Plant Name: Coke Bethl Steel (EPA) **Test Date:** 8-11-98

Run Number: B-0-m429-1 **Operator:** SB

Traverse Point Number	Sampling Time, (min.)	Clock Time (24-hour clock)	Gas Meter Reading (V_m) ft³	Velocity Head (ΔP_s) in. H_2O	Orifice Pres. Differential (ΔH) in. H_2O Desired	Orifice Pres. Differential (ΔH) in. H_2O Actual	Stack Temp. °F (T_s)	Probe Temp. / Filter Temp. °F	Impinger Temp. °F	Dry Gas Meter Temp. Inlet ($T_{m_{in}}$) °F	Dry Gas Meter Temp. Outlet ($T_{m_{out}}$) °F	Pump Vacuum In. Hg	
(3)	27	1825	942.7	.80	1.7	1.7	133	234 / 263	60	79	78	7	59
	32	1830	944.1	.13	.27	.27	137	238 / 262	60	79	78	1	59
(4)	37	1835	945.8	.12	.25	.25	137	240 / 261	60	78	78	1	58
	38	1836	946.1	.12	.25	.25	135	233 / 254	60	78	79	1	58
	43	1841	948.9	.90	1.9	1.9	131	236 / 267	60	78	78	1	58
	48	1846	950	.12	.25	.25	134	235 / 254	60	78	78	1	58
	48.30	1846.30	950.748	.98	2.1	2.1	130	237 / 256	60	79	78	1	58
Port 4	0	1910	950.924				~~101~~ 58	/ ~~257~~ 58			~~77~~ 58		
(1)	5	1915	952.8	.17	.36	.36	121	267 / 257	60	77	77	1	58
	10	1920	953.9	1.0 ~~1.5~~ 58	2.1	2.1	132	267 / 250	60	76	77	7	58
(2)	15	1925	956.3	.13	.27	.27	133	266 / 264	60	77	76	1	58
	20	1930	957.7	.13	.27	.27	133	259 / 264	60	77	76	1	58
	21	1931	958.1	.12	.25	.25	133	261 / 265	60	76	77	1	58
(3)	26	1936	960.4	.90	1.9	1.9	131	268 / 259	60	75	77	7	58
	30	1940	961.9	.13	.27	.27	132	269 / 262	57	76	77	1	58
	35	1945	964.2	1.0	2.1	2.1	130	266 / 260	58	75	77	7	58
(4)	39	1949	966.0	.15	.31	.31	133	269 / 258	56	76	77	1	54
	44	1954	968.2	.95	2.0	2.0	130	268 / 260	55	76	76	7	55
	48	1958	969.483	.14	.30	.30	132	267 / 260	57	75	77	1	56
		/						/					
		/						/					
		/						/					
		/						/					
		/						/					

PACIFIC ENVIRONMENTAL SERVICES, INC

4700 Duke Drive, Suite 150
Mason, Ohio 45040
513.398.2556 FAX: 513.398.3342

Sample Train Recovery Data

Plant: EPA-Coke Bethlehem Steel Chesterton, Indiana Date: 8-11-98

Sampling Location: Baghouse Outlet

Sample Recovery Person: RK, RD Field Team Leader: DS

Sampling Method Type: M 429

Run Number: B-O-M429-1 Impinger Train ID: RTP #24

Job Number: S506.000

Comments:

Front Half Data

Filter No.: Teflon Filter Media Type: —

Filter Description: Tiny particles - few - no loading on filter

Filter No.: Filter Media Type:

Filter Description:

Back Half Data

	XAD-Trap	Impinger 1	Impinger 2
Contents:	XAD	Empty	$NaHCO_3$/Na_2CO_3
Final Volume: (~~ml~~) g	374.5	534.2	765.2
No caps Initial Volume: (~~ml~~) g	353.5	476.2	726.6
Net Volume: (~~ml~~) g	21.0	58.0	38.6

	Impinger 3	Impinger 4	Silica Gel
Contents:	$NaHCO_3$/Na_2CO_3	empty	Silgel
Final Volume: (~~ml~~) g	566.6	570.6	(g): 940.9
Initial Volume: (~~ml~~) g	629.3	567.4	(g): 905.2
Net Volume: (~~ml~~) g	-62.7	3.2	(g): 35.7

Total Moisture Collected (~~ml~~) g 93.8 ✓

Description of Impinger catch: clear

SB
8-27-9

FIELD DATA SHEET

~~K = 4.09~~
K = 3.0

Plant: Coke Beth. Steel (EPA)
Sampling Location: Outlet
Run Number: B-D-0428-2 Date: 8-12-98
Pretest Leak Rate: .006 cfm @ 15 in. Hg.
Pretest Leak Check: Pitot: ✓ Orsat: ✓

Sample Type: 429 Operator: SB
Pbar: 29.8 Ps: -.49
CO2: 0 O2: 21
Probe Length/Type: 5' Pitot #: 5B
Stack Diameter: 108" As: 63.62

Nozzle ID: .235 Thermocouple #: 5B
Assumed Bws: 5 Filter #: teflon
Meter Box #: MB-2 Y: 1.002 ΔH@: 1.797
Post-Test Leak Rate: .001 cfm @ 8 in. Hg.
Post-Test Leak Check: Pitot: ✓ Orsat: ✓

Traverse Point Number	Sampling Time (min)	Clock Time (24-hour clock)	Gas Meter Reading (Vm) ft³	Velocity Head (Δp) in H2O	Orifice Pressure Differential (ΔH) in H2O Desired	Actual	Stack Temp. (Ts)	Temperature °F Probe	Filter	Impinger Temp. °F	Dry Gas Meter Temp. Inlet (Tm in °F)	Outlet (Tm out °F)	Pump Vacuum (in. Hg)	XAD
1-1	0	928	968.901											
	5	933	972.0	.15	.40	.40	142	216	260	60	77	77	1	58
	10	938	975.1	.89	2.4	2.4	139 ~~265~~ 59	268	251	57	77	77	6	58
	14	942	976.6	.13	.35	.35	140	268	266	60	78	79	1	59
	19	947	979.2	.95	2.6	2.6	139	268	267	55	78	80	5	59
	26	954	983.0	.32	~~.86~~ .38	~~.86~~ .38	143	268	259	55	79	82	1	59
(2)	31	1001	985.1	1.0	2.7	2.7	141	266	268	55	80	83	7	59
	36	1006	987.0	.12	.32	.32	145	267	266	59	82	81	1	59
	41	1011	990.2	.89	2.4	2.4	145	266	268	56	81	82	6	59
	46	1016	992.9	.13	.35	.35	145	269	253	60	82	86	1	59
	58	1026	997.8	.90	2.4	2.4	141	266	250	61	83	87	6	59
(3)	60	1028	999.5	.92	2.5	2.5	144	270	253	57	85	89	6	58
	~~1:10~~ 70	1038	003.8	.11	~~2.0~~ .30	~~2.0~~ .30	147	259	264	58	86	90	1	60
	58 ~~1:27~~ 72	1040	004.5	.82	2.2	2.2	143	266	248	58	89	90	6	59
	84	1052	008.0	.10	.27	.27	143	268	265	60	88	90	1	58
	86	1054	010.0	.93	2.5	2.5	144	266	253	60	87	90	6	58
(4)	106	1114	016.6	.09	.24	.24	148	262	262	60	86	90	1	58
	108	1116	018.1	1.0	2.7	2.7	142	265	252	60	85	85	6	58
	115	1123	020.9	.11	.30	.30	141	265	258	60	85	85	1	58
	117	1125	022.0	1.0	2.7	2.7	140	266	265	60	84	84	6	58
	120	1128	023.135	.11	.30	.30	142	264	253	60	83	85	1	59
stop for Inlet 1144	140	1140	023.201									~~82~~		
2-2 start 1210	~~08~~	~~1145~~	024.498	.12	.32	.32	147	265	254	60	81	83	1	59
	~~1159~~	1210	024.6	.93	2.5	2.5	144	268	251	60	80	82	6	59
	7	1212	026.2	.11	.30	.30	144	263	251	60	81	80	1	60
	27	1232	032.4	.90	2.4	2.4	135	265	271	52	80	79	7	57
	29	1234	034.3	.11	.30	.30	135	263	261	55	79	80	1	59

ΔVm= 200.895 $\overline{\sqrt{\Delta p}}$= _____ $\overline{\Delta H}$= _____ $\overline{Ts}$= _____ $\overline{Tm}$= _____

Plant Name: Coke Bethl. Steel (EPA) **Test Date:** 8-12-98

Run Number: B-0-M429-2 **Operator:** SB

(K = 3.0)

Traverse Point Number	Sampling Time, (min.)	Clock Time (24-hour clock)	Gas Meter Reading (V_m) ft³	Velocity Head (ΔP_s) in. H_2O	Orifice Pres. Differential (ΔH) in. H_2O Desired	Actual	Stack Temp. °F (T_s)	Probe Temp. / Filter Temp. °F	Impinger Temp. °F	Dry Gas Meter Temp. Inlet ($T_{m_{in}}$) °F	Outlet ($T_{m_{out}}$) °F	Pump Vacuum In. Hg	XAD
(2)	39	1 1244	37.5	.85	2.3	2.3	132	261 / 265	60	79	79	6	59
	41	1 1246	38.9	.13	.35	.35	135	262 / 267	58	79	78	1	59
	50	1 1255	042.4	.95	2.6	2.6	134	262 / 265	50	78	80	6	55
	52	1 1257	043.7	.13	.35	.35	136	258 / 262	53	79	81	1	56
(3)	61	1 1306	046.9	.93	2.5	2.5	137	261 / 254	55	79	80	7	58
	63	1 1308	048.4	.14	.37	.37	140	255 / 266	57	78	80	5	59
	72	1 1317	051.7	.95	2.5	2.5	140	263 / 247	57	79	80	6	58
	74	1 1319	053.8	.13	.35	.35	143	254 / 268	57	79	80	6	58
(4)	95	1 1340	060.9	.90	2.5	2.5	132	246 / 250	55	78	79	7	56
	97	1 1342	062.8	.13	.35	.35	132	245 / 252	55	78	79	1	56
	105	1 1350	066.0	.92	2.5	2.5	130	245 / 264	50	78	79	7	58
	107	1 1352	067.5	.14	.38	.38	133	247 / 261	50	78	80	1	56
	115	1 1400	069.7	.90	2.4	2.4	135	249 / 255	55	79	79	7	56
	117	1 1402	071.2	.13	.35	.35	137	248 / 265	54	78	79	1	56
	120	1 1405	072.014				12	~~258~~ /					
		1						58 ~~259 / 252~~	~~60~~	~~77~~	~~78~~	~~1~~	~~56~~
Port 3	0	1 1420	072.119	.13	.35	.35	140	~~259~~ / 252	60	77	78	1	56
(1)	10	1 1430	075.465	.14	.38	.38	132	253 / 252	65	76	77	1	62
	15	1 1540	77.0	.90	2.4	2.4	132	257 / 253	62	77	75	6	55
	25	1 1553	82.1	.14	.38	.38	134	242 / 252	60	77	76	1	60
	27	1 1555	84.1	.99	2.7	2.7	135	240 / 25-	62	77	76	5	61
(2)	36	1 1602	87.4	.14	.38	.38	137	239 / 253	63	77	75	1	61
	38	1 1604	89.7	.93	2.5	2.5	130	239 / 252	64	78	76	5	62
		1		.14	.38	.38	136	239 / 254	64	78	76	1	62

L.R. .001 8 in

stop.

Plant Name: Coke Bath Steel (EPA) **Test Date:** 8-12-98

Run Number: B-D-M429-2 **Operator:** SB

K=3.0

Traverse Point Number	Sampling Time, (min.) / Clock Time (24-hour clock)	Gas Meter Reading (V_m) ft³	Velocity Head (ΔP_s) in. H_2O	Orifice Pres. Differential (ΔH) in. H_2O Desired	Orifice Pres. Differential (ΔH) in. H_2O Actual	Stack Temp. °F (T_s)	Probe Temp. / Filter Temp. °F	Impinger Temp. °F	Dry Gas Meter Temp. Inlet ($T_{m_{in}}$) °F	Dry Gas Meter Temp. Outlet ($T_{m_{out}}$) °F	Pump Vacuum In. Hg	XAD
	48.0 / 1614	093.0	.93	2.5	2.5	138	226 / 268	60	76	77	7	62
	50.0 / 1616	094.9	.13	.35	.35	137	227 / 254	60	77	79	1	62
	57.0 / 1623	97.5	.90	2.4	2.4	137	228 / 258	60	76	78	5	62
	59 / 1625	98.7	.13	.35	.35	138	230 / 264	60	77	78	1	61
(3)	69 / 1635	102.1	.85	2.3	2.3	134	232 / 255	60	77	78	6	61
	71 / 1637	103.9	.13	.35	.35	136	227 / 263	64	77	78	1	60
	78 / 1644	106.0	.80	2.2	2.2	136	228 / 268	64	78	77	6	61
	80 / 1646	107.6	.14	.38	.38	138	231 / 250	64	76	77	1	60
(4)	105 / 1711	115.8	.96	2.5	2.5	127	216 / 255	60	79	78	6	59
	107 / 1713	117.4	.14	.39	.39	127	213 / 265	60	79	79	1	59
	116 / 1721	120.3	.85	2.3	2.3	128	219 / 258	60	78	78	6	60
	118 / 1723	122.051	.13	.36	.36	131	218 / 263	60	78	79	1	60
Port 4	0 / 1734	122.759	.14	.39	.39	118	256 / 245	60	78	79	1	60
(1)	7 / 1743	125.2	1.0	2.7	2.7	135	270 / 266	62	78	78	6	63
	9 / 1745	126.9	.14	.39	.39	137	269 / 265	61	78	79	1	60
	17.0 / 1753	129.7	.93	2.5	2.5	136	268 / 252	60	79	78	6	60
	19.0 / 1755	131.5	.15	.40	.40	137	269 / 268	60	78	78	1	60
	27.0 / 1803	134.6	.90	2.4	2.4	135	269 / 247	60	79	79	6	60
	29.0 / 1805	136.2	.15	.40	.40	138	269 / 256	60	78	79	1	62
(2)	37.0 / 1813	138.9	.90	2.4	2.4	136	270 / 265	62	78	78	6	63
	39.0 / 1815	140.5	.15	.41	.41	136	269 / 252	63	78	79	1	62
	59.0 / 1835	146.9	1.0	2.7	2.7	127	270 / 265	57	78	78	6	58
	61.0 / 1837	148.5	.16	.44	.44	128	270 / 263	59	78	78	1	59
	70.0 / 1846	151.5	1.1	3.0	3.0	128	/		78	78	7	

Plant Name: Coke Bethl. Steel EPA **Test Date:** 8-11-98

Run Number: B-O-M429-2 **Operator:** SB

Traverse Point Number	Sampling Time, (min.) / Clock Time (24-hour clock)	Gas Meter Reading (V_m) ft³	Velocity Head (ΔP_s) in. H_2O	Orifice Pres. Differential (ΔH) in. H_2O Desired	Actual	Stack Temp. °F (T_s)	Probe Temp. / Filter Temp.° F	Impinger Temp. °F	Dry Gas Meter Temp. Inlet ($T_{m_{in}}$) °F	Outlet ($T_{m_{out}}$) °F	Pump Vacuum In. Hg	
	72.0 / 1848	153.1	.14	.44	.44	130	268 / 264	60	79	79	1	60
	80.0 / 1856	155.4	.98	2.7	2.7	132	270 / 256	60	78	79	7	60
	82.0 / 1858	157.4	.15	.41	.41	135	268 / 255	59	77	78	1	60
	90.0 / 1906	160.5	.89	2.4	2.4	141	270 / 265	60	79	78	6	59
	92.0 / 1908	162.0	.15	.40	.40	140	271 / 252	60	79	78	1	60
	100.0 / 1916	165.0	1.1	2.9	2.9	138	270 / 259	59	78 78	79 77	7	60
	102.0 / 1918	166.6	.15	.40	.40	141	270 / 267	59	78	78	1	60
	120.0 / 1934	172.906					/					
	/						/					
	/						/					
	/						/					
	/						/					
	/						/					
	/						/					
	/						/					
	/						/					
	/						/					
	/						/					
	/						/					
	/						/					
	/						/					
	/						/					
	/						/					
	/						/					
	/						/					
	/						/					

[redacted]

PACIFIC ENVIRONMENTAL SERVICES, INC

4700 Duke Drive, Suite 150
Mason, Ohio 45040
513.398.2556 FAX: 513.398.3342

Sample Train Recovery Data

Plant: Bethlehem Steel EPA - Coke Ovens Date: 8/12/98

Sampling Location: Baghouse Outlet = ~~Field Blank~~

Sample Recovery Person: RK, BD Field Team Leader: D. Schlitzel

Sampling Method Type: CARB 429

Run Number: B-O-429-~~Blank~~ 2 Impinger Train ID: ~~Blank~~ R+P 24

Job Number: 5506.000

Comments: ~~Field Blank~~ - Outlet location - Run No. 2

Front Half Data

Filter No.: Teflon mat Filter Media Type: RWD Dust numbered

Filter Description: very little visible

Filter No.: — Filter Media Type: —

Filter Description: —

Back Half Data

	XAD-Trap	Impinger 1	Impinger 2
Contents:	XAD-2 resin	Empty (Dry weight)	$NaHCO_3$ / Na_2CO_3
Final Volume: (ml)	395.7	540.6	681.0
Initial Volume: (ml)	~~494.4~~ 363.5	494.4	686.4
Net Volume: (ml)	32.2	46.2	-5.4

	Impinger 3	Impinger 4	Silica Gel
Contents:	$NaHCO_3$ / Na_2CO_3	Empty	Silica Gel
Final Volume: (ml)	625.1	588.4	(g): 859.1
Initial Volume: (ml)	626.5	582.8	(g): 818.6
Net Volume: (ml)	-1.4	5.6	(g): 40.5

Total Moisture Collected (ml): 118.0

Description of Impinger catch: Clear

SB
8-27-98

FIELD DATA SHEET

K = 3.0

Plant: Coke Bethl. Steel (EPA)
Sampling Location: Outlet
Run Number: B-O-M429-3 Date: 8-13-98
Pretest Leak Rate: .004 cfm @ 15 in. Hg.
Pretest Leak Check: Pitot: ✓ Orsat: ✓

Sample Type: M429 Operator: SB
Pbar: 29.8 Ps: -.50
CO2: 0 O2: 21
Probe Length/Type: 5' glass Pitot #: 5B
Stack Diameter: 108" As: 63.6 ft²

Nozzle ID: .235 Thermocouple #: 5B
Assumed Bws: 5 Filter #: teflon
Meter Box #: MB2 Y: 1.002 ΔH@: 1.797
Post-Test Leak Rate: .004 cfm @ 11 in. Hg.
Post-Test Leak Check: Pitot: ✓ Orsat: ✓

	Traverse Point Number	Sampling Time (min)	Clock Time (24-hour clock)	Gas Meter Reading (Vm) ft³	Velocity Head (Δp) in H2O	Orifice Pressure Differential (ΔH) in H2O Desired	Orifice Pressure Differential (ΔH) in H2O Actual	Stack Temp. (Ts)	Temperature °F Probe	Temperature °F Filter	Impinger Temp. °F	Dry Gas Meter Temp. Inlet (Tm in °F)	Dry Gas Meter Temp. Outlet (Tm out °F)	Pump Vacuum (in. Hg)	×10
Port 1		0	840	173.142											
		4	844	174.6	.17	.47	.47	113	267	257	60	72	73	1	57
		6	846	176.3	.98	2.7	2.7	118	269	260	50	72	73	1	53
		15	855	179.6	.16	.44	.44	123	260	265	50	72	74	1	53
		17	857	181.5	1.0	2.8	2.8	122	264	268	50	76	75	1	52
		26	906	184.5	.13	.36	.36	123	269	250	49	74	76	1	56
		28	908	186.2	1.0	2.8	2.8	125	268	264	49	75	79	9	55
		42	922	190.3	.14	.39	.38	128	268	252	52	80	76	2	59
	(2)	44	924	192.7	.98	2.7	2.7	128	269	248	52	79	83	10	55
		52	932	195.7	.14	.36	.36	130	266	262	51	79	83	2	55
		54	934	197.2	.90	2.5	2.5	129	270	261	52	81	80	10	60
	(3)	62	942	200.3	.14	.39	.39	132	268	250	52	86	84	2	59
		64	944	201.8	1.0	2.7	2.7	135	266	263	54	81	86	10	55
		71	951	204.6	.13	.36	.36	135	270	258	55	82	86	2	58
		73	953	206.0	.88	2.4	2.4	136	270	251	55	84	86	9	58
		81	1001	208.7	.14	.38	.38	138	269	251	56	83	87	1	58
		83	1003	210.2	.89	2.4	2.4	138	268	266	54	83	87	9	62
		92	1012	213.5	.14	.38	.38	140	266	252	55	83	86	2	64
	(4)	94	1014	215.2	.94	2.6	2.6	138	269	262	53	84	87	10	59
		116	1036	222.0	.10	.27	.27	140	269	260	54	84	88	1	59
		118	1038	223.7	.89	2.5	2.5	130	268	263	56	85	89	9	57
		120	1040	224.350	.12	.33	.33	132	267	264	52	86	91	1	58
		0		224.4				138							
Port 2	(1)		1052	226.9	.10	.28	.28	134	266	251	58	87	88	1	58
		5	1057	228.0	.86	2.4	2.4	134	265	247	58	88	87	9	64
		7	1059	230.6	.09	.25	.25	137	267	258	57	90	88	1	62
		16	1108	232.7	.92	2.5	2.5	139	266	258	52	88	86	9	58

ΔVm = 201.093 $\overline{\sqrt{\Delta p}}$ = _____ $\overline{\Delta H}$ = _____ $\overline{Ts}$ = _____ $\overline{Tm}$ = _____

Plant Name: Coke Bethl. Steel (EPA) **Test Date:** 8-13-98

Run Number: B-O-M429-3 **Operator:** SB

K = 3.0

Traverse Point Number	Sampling Time, (min.)	Clock Time (24-hour clock)	Gas Meter Reading (V_m) ft³	Velocity Head (ΔP_s) in. H_2O	Orifice Pres. Differential (ΔH) in. H_2O Desired	Orifice Pres. Differential (ΔH) in. H_2O Actual	Stack Temp. °F (T_s)	Probe Temp. / Filter Temp. °F	Impinger Temp. °F	Dry Gas Meter Temp. Inlet ($T_{m_{in}}$) °F	Dry Gas Meter Temp. Outlet ($T_{m_{out}}$) °F	Pump Vacuum In. Hg	XAD
(1) cont.	18	1110	~~222.~~ 253.4	.10	.27	.27	143	266 / 250	54	88	88	1	61
	26.0	1118	236.7	.86	2.3	2.3	144	265 / 264	55	87	87	9	58
	28.0	1120	241.6	.10	.27	.27	145	266 / 260	55	88	88	1	59
(2)	45	1137	243.2	.95	2.6	2.6	138	267 / 264	57	86	86	10	57
	47	1139	246.0	.10	.27	.27	139	266 / 257	54	86	86	1	58
	55	1147	247.4	~~2.5~~ .93	2.5	2.5	138	270 / 250	58	86	87	9	63
	57	1149	250.0	.09	.24	.24	140	270 / 257	59	86	88	1	63
(3)	66	1158	252.6	.86	2.3	2.3	141	268 / 259	60	85	86	9	62
	68	1200	255.4	.10	.27	.27	141	270 / 261	62	84	85	1	63
	75	1207	256.9	.88	2.4	2.4	.39	270 / 259	63	84	86	9	64
	77	1209	264.8	.10	.27	.27	140	270 / 262	63	84	87	1	63
(4)	104	1238	266.6	.82	2.3	2.3	128	257 / 248	54	84	84	10	63
	106	1238	270.4	.11	.31	.31	129	248 / 265	53	84	85	1	60
	114	1246	271.8	.93	2.6	2.6	128	257 / 257	58.	83	83	9	60
	116	1248	273.490	.14	.39	.39	132	260 / 253	58	83	84	1	60
Port 3	-	1238	273.901					/		84	~~83~~		
time is 1300. Not 1200	1.0	1239	274.6	.12	.33	.33	129	264 / 256	60	80	80	1	60
	2.0	1240	276.2	.92	2.5	2.5	145	255 / 250	60	80	80	9	60
	4.0	1242	279.3	.10	.27	.27	148	254 / 263	60	80	80	1	60
(1)	13.0	1251	281.1	.95	2.5	2.5	147	241 / 259	53	81	80	9	60
	15.0	1253	284.7	.11	.30	.30	147	243 / 255	54	81	82	1	60
	26.0	1304	286.9	.95	2.5	2.5	144	239 / 252	54	80	81	9	62
	28.0	1306	292.1	.09	.24	.24	144	237 / 264	53	80	81	1	64
(2)	43	1421	293.6	.95	2.6	2.6	137	256 / 258	59	90	81	1	64

.001 at 10

Plant Name: Coke - Bethl. Steel (EPA) **Test Date:** 8-13-98

Run Number: B-O-M429-3 **Operator:** SB

Traverse Point Number	Sampling Time, (min.)	Clock Time (24-hour clock)	Gas Meter Reading (Vm) ft³	Velocity Head (ΔP_s) in. H_2O	Orifice Pres. Differential (ΔH) in. H_2O Desired	Actual	Stack Temp. °F (Ts)	Probe Temp. / Filter Temp. °F	Impinger Temp. °F	Dry Gas Meter Temp. Inlet ($T_{m_{in}}$) °F	Outlet ($T_{m_{out}}$) °F	Pump Vacuum In. Hg	XAD
(2) cont	45	1423	~~293.4~~ 308.1	.10	.27	.27	139	251 / 258	59	80	80	1	60
(3)(4)	93	1511	309.8	.95	2.7	2.7	118	251 / 259	65	80	83	9	60
	95	1513	312.7	.10	.28	.28	119	246 / 254	65	80	84	1	60
	102	1520	314.1	.98	2.7	2.7	122	256 / 258	58	81	82	9	62
	104	1522	316.9	.11	.31	.31	123	254 / 257	56	82	84	1	49
	113	1531	318.4	.97	2.5	2.5	131	248 / 255	56	81	82	10	63
	115	1533	320.091	.10	.27	.27	133	252 / 254	58	81	84	1	62
Port 4		1547	322.627					/					
(1)	0	1548	323.6	.11	.30	.30	139	270 / 264	60	81	83	1	60
	2	1550	326.2	1.0	2.7	2.7	140	267 / 255	60	81	83	10	59
	4	1552	328.6	.11	.30	.30	144	267 / 263	57	80	84	1	60
	12	1600	330.4	1.0	2.7	2.7	142	266 / 264	54	82	81	10	55
	14	1602	333.0	.12	.32	.32	144	269 / 252	55	81	84	1	57
	22	1610	334.7	.93	2.5	2.5	141	268 / 256	57	83	84	9	58
	24	1612	337.8	.12	.32	.32	146	269 / 263	60	83	86	1	60
(2)	31	1619	339.2	.95	2.5	2.5	143	266 / 260	60	84	83	10	60
	33	1621	344.3	.09	.22	.22	144	265 / 258	60	81	81	1	60
	48	1636	345.8	1.0	2.5	2.5	135	267 / 268	59	83	83	9	58
	50	1638	349.6	.13	.33	.33	139	268 / 253	58	84	84	1	58
	58	1646	350.9	.93	2.4	2.4	136	267 / 263	60	82	83	9	60
(3)	60	1648	355.0	.11	.28	.28	136	268 / 264	58	82	83	1	57
	75	1703	356.7	.97	2.5	2.5	141	267 / 259	58	83	83	9	59
	77	1705	359.3	.11	.30	.30	133	270 / 264	60	82	84	1	60
	85	1713	361.2	1.0	2.7	2.7	134	269 / 265	60	82	82	10	60

Plant Name: Coke Bethl. Steel (EPA) **Test Date:** 8-13-98

Run Number: B-O-M429-3 **Operator:** SB

Traverse Point Number	Sampling Time, (min.)	Clock Time (24-hour clock)	Gas Meter Reading (V_m) ft³	Velocity Head (ΔP_s) in. H_2O	Orifice Pres. Differential (ΔH) in. H_2O Desired	Actual	Stack Temp. °F (T_s)	Probe Temp. / Filter Temp. °F	Impinger Temp. °F	Dry Gas Meter Temp. Inlet ($T_{m_{in}}$) °F	Outlet ($T_{m_{out}}$) °F	Pump Vacuum In. Hg	
(3) cont	87	1715	364.5	.11	.30	.30	136	269 / 253	60	83	84	58 21	60
(4)	95	1723	366.4	.99	2.7	2.7	137	269 / 261	60	83	83	10	60
	97	1725	370.5	.13	.35	.35	140	269 / 265	57	83	83	1	57
	109	1737	372.7	1.0	2.7	2.7	136	268 / 263	54	83	82	11	58
	111	1739	375.0	.10	.27	.27	138	269 / 256	54	82	83	1	58
	119	1744	376.771	.97	2.6	2.6	134	268 / 260	55	83	82	10	54
	120	1748											

PACIFIC ENVIRONMENTAL SERVICES, INC

4700 Duke Drive, Suite 150
Mason, Ohio 45040
513.398.2556 FAX: 513.398.3342

Sample Train Recovery Data

Plant: Bethlehem Steel - EPA Coke Chesterton Ind. Date:

Sampling Location: Baghouse Outlet

Sample Recovery Person: RD/ DK Field Team Leader: D Schuffel

Sampling Method Type: CARB 429

Run Number: B-0-429-3 Impinger Train ID: RTP 24

Job Number: 5506.000

Comments:

Front Half Data

B-0-429-3

Filter No.: Teflon mt Filter Media Type: teflon mt

Filter Description: very small amount of particulate

Filter No.: — Filter Media Type: —

Filter Description: —

Back Half Data

	XAD-Trap	Impinger 1 (Dockend)	Impinger 2
Contents:	XAD-2	Empty	$NaHCO_3/Na_2CO_3$
Final Volume: (ml)	357.4	518.9	663.6
Initial Volume: (ml)	344.4	476.6	669.2
Net Volume: (ml)	13.0	42.3	-5.6

	Impinger 3	Impinger 4	Silica Gel
Contents:	$NaHCO_3/Na_2CO_3$	Empty	5:1 6-/
Final Volume: (ml)	730.3	534.6	(g): 939.2
Initial Volume: (ml)	731.1	530.4	(g): 896.5
Net Volume: (ml)	-0.8	4.2	(g): 42.7 SB

Total Moisture Collected (ml): 95.8

Description of Impinger catch: Clear

✓ SB
8-27-98

FIELD DATA SHEET

Plant: Bethlehem Steel
Sampling Location Baghouse Outlet
Run Number: B-O-429-FB Date: 8/14/98
Pretest Leak Rate: .005 cfm @ 15 in. Hg.
Pretest Leak Check: Pitot: N/A Orsat: —

Sample Type: 429 Operator: DDH
Pbar: 29.70 Ps: 0
CO2: 0 O2: 20.9
Probe Length/Type: 5'/S-Type Pitot #: 5T
Stack Diameter: N/A As: N/A

Nozzle ID: .215 Thermocouple #: 55T
Assumed Bws: 3 Filter #: Unnumbered
Meter Box #: MB-4 Y: .979 ΔH@: 1.872
Post-Test Leak Rate: 0.005 cfm @ 15 in. Hg.
Post-Test Leak Check: Pitot: N/A Orsat: —

Traverse Point Number	Sampling Time (min)	Clock Time (24-hour clock)	Gas Meter Reading (Vm) ft³	Velocity Head (Δp) in H2O	Orifice Pressure Differential (ΔH) in H2O		Stack Temp. (Ts)	Temperature °F		Impinger Temp. °F	Dry Gas Meter Temp.		Pump Vacuum (in. Hg)
					Desired	Actual		Probe	Filter		Inlet (Tm in °F)	Outlet (Tm out °F)	
	0 10:12	0	277.900										
	1027		277.970	N/A	N/A	N/A	N/A	253	252	80	N/A	N/A	
	1040		278.040	↓	↓	↓	↓			80	↓		
	1055		278.102	↓	↓	↓	↓			80	↓		

15" 0.005

ΔVm= _____ $\overline{\sqrt{\Delta p}}$= _____ $\overline{\Delta H}$= _____ $\overline{Ts}$= _____ $\overline{Tm}$= _____

PACIFIC ENVIRONMENTAL SERVICES, INC

4700 Duke Drive, Suite 150
Mason, Ohio 45040
513.398.2556 FAX: 513.398.3342

Sample Train Recovery Data

Plant: Coke EPA Bethlehem Steel Date: 8/14/98

Sampling Location: Baghouse Outlet

Sample Recovery Person: RWN Field Team Leader: DS

Sampling Method Type: M429

Run Number: B-O-429-FB Impinger Train ID: RTP-24

Job Number: 5506.000

Comments: Baghouse outlet Field blank

Front Half Data

Filter No.: NA Filter Media Type: Teflon mat

Filter Description: Clean

Filter No.: Filter Media Type:

Filter Description:

Back Half Data

	XAD-Trap	Impinger 1	Impinger 2
Contents:	XAD-2	Empty	$NaHCO_3/Na_2CO_3$
Final Volume: (ml)	335.0	477.5	669.0
Initial Volume: (ml)	334.4	477.7	669.2
Net Volume: (ml)	0.6	-0.2	-0.2

	Impinger 3	Impinger 4	Silica Gel
Contents:	$NaHCO_3/Na_2CO_3$	Empty	Sil Gel
Final Volume: (ml)	728.4	529.5	(g): 883.0
Initial Volume: (ml)	728.0	529.8	(g): 883.4
Net Volume: (ml)	0.4	-0.3	(g): -0.4

Total Moisture Collected (ml): -0.1 ✓

Description of Impinger catch:

SB
8-27-

TRAVERSE POINT LOCATION FOR CIRCULAR DUCTS

Plant: Bethlehem Steel

Date: 8/14/98

Sampling Location: Under Fire Stack

Inside of Far Wall to Outside of Nipple: 224"

Inside of Near Wall to Outside of Nipple (Nipple Length): 47"

Stack I.D.: 177"

Distance Downstream from Flow Disturbance (Distance B):

1320 inches / Stack I.D. = 7.46 dd

Distance Upstream from Flow Disturbance (Distance A):

1764 inches / Stack I.D. = 9.97 dd

Calculated By: DAN Scheffel

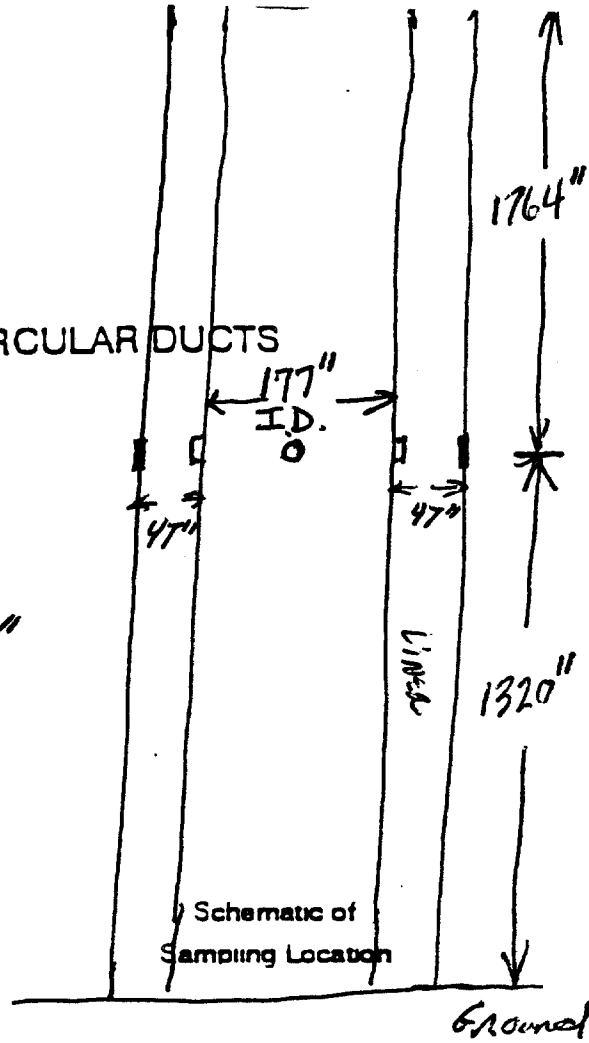

Schematic of Sampling Location

Traverse Point Number	Fraction of Length	Length (inches)	Product of Columns 2 & 3 (To nearest 1/8")	Nipple Length (inches)	Traverse Point Location (Sum of Col. 4 & 5)
1	0.044	177	7 3/4	47	54 3/4
2	0.146	177	25 7/8	47	72 7/8
3	0.296	177	52 3/8	47	99 3/8
4	0.704	177	124 5/8	47	171 5/8
5	0.854	177	151 3/16	47	198 3/16
6	0.956	177	169 3/16	47	216 3/16

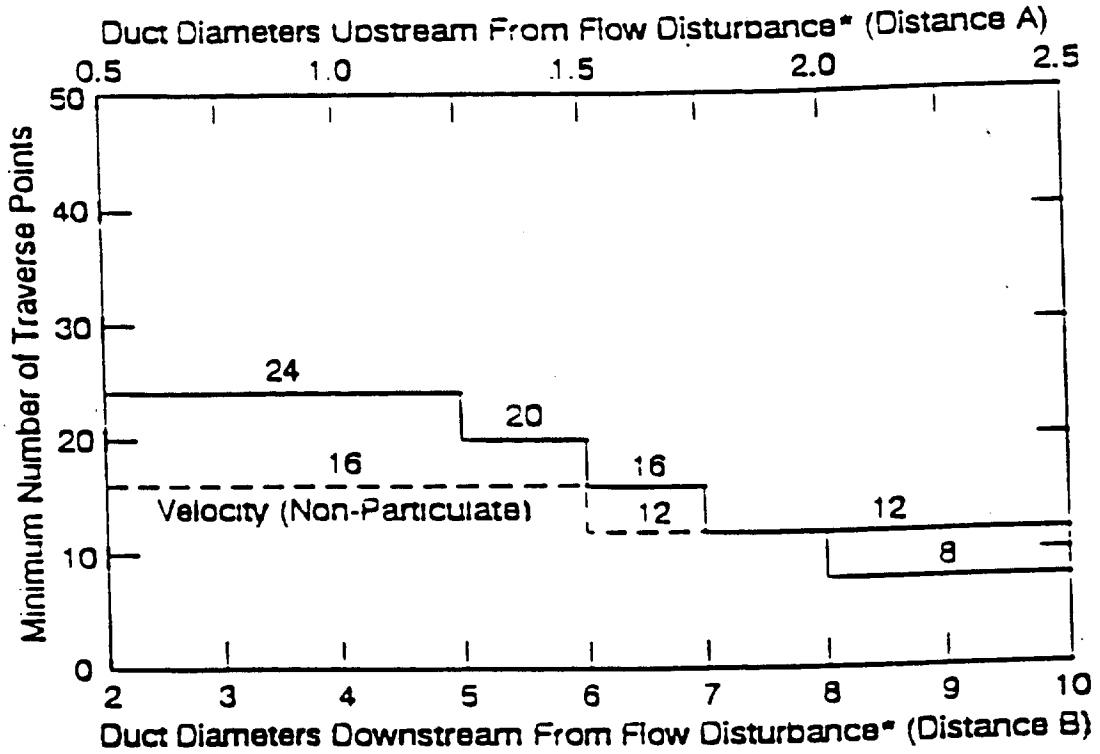

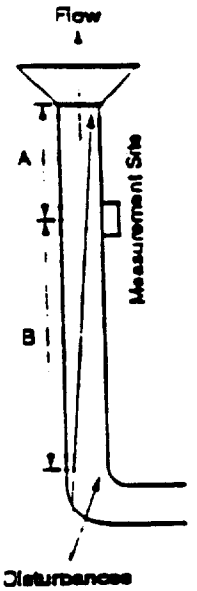

LOCATION OF TRAVERSE POINTS IN CIRCULAR DUCTS
(Fraction of Stack Diameter from Inside Wall to Traverse Point)

Traverse Point Number on a Diameter	Number of Traverse Points on a Diameter				
	4	6	8	10	12
1	0.067	0.044	0.032	0.026	0.021
2	0.250	0.146	0.105	0.082	0.067
3	0.750	0.296	0.194	0.146	0.118
4	0.933	0.704	0.323	0.226	0.177
5		0.854	0.677	0.342	0.250
6		0.956	0.806	0.658	0.356
7			0.895	0.774	0.644
8			0.968	0.854	0.750
9				0.918	0.823
10				0.974	0.882
11					0.933
12					0.979

PACIFIC ENVIRONMENTAL SERVICES, INC.

Project No.	Page of
Client	
Location	

Prepared By	Date	Checked By	Date	Sheet Title

Circumference 832"

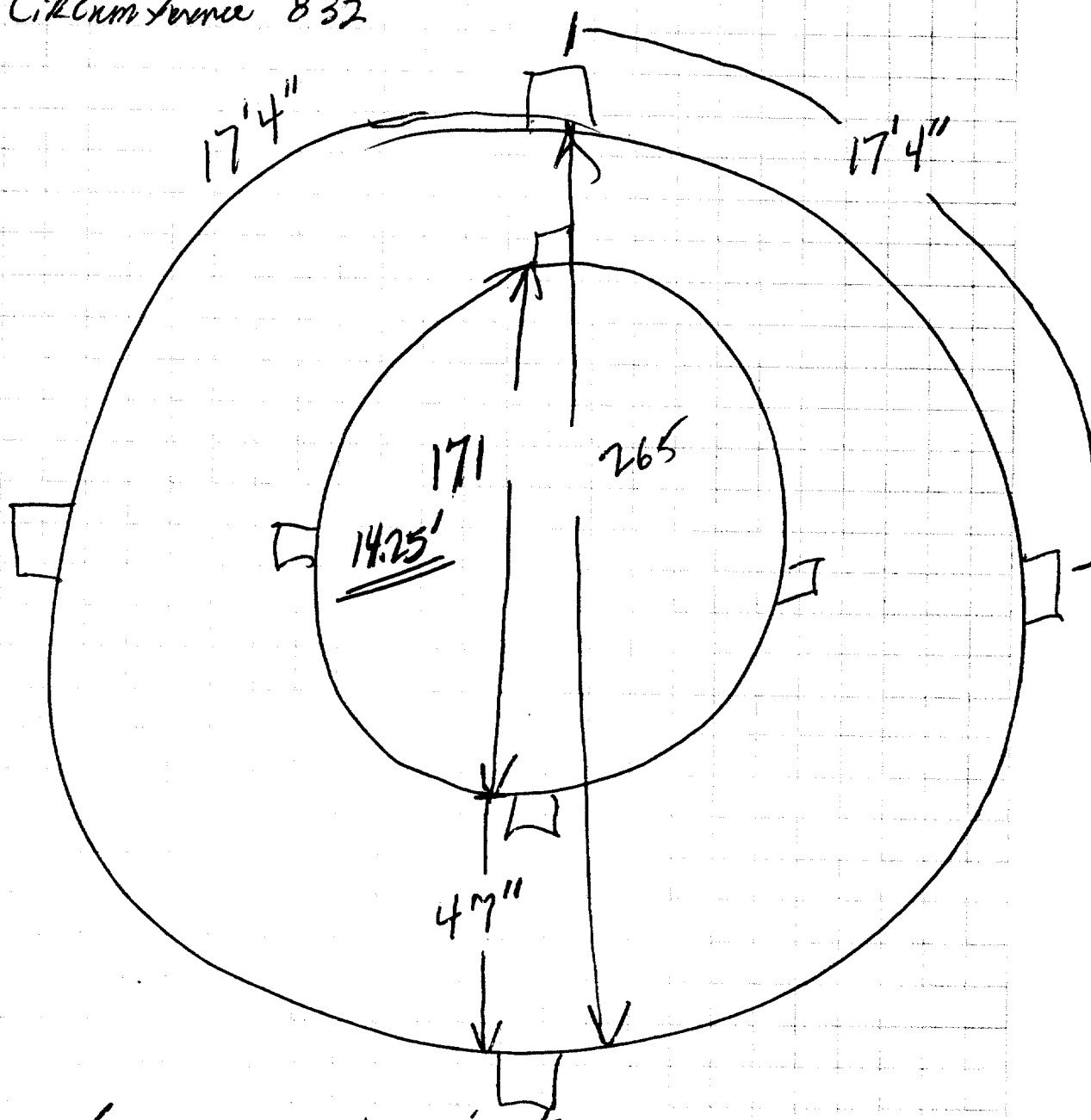

circumference = 3.14 x Diameter

$$\frac{832}{3.14} = 265''$$

Pacific Environmental Services, Inc.

Dry Molecular Weight Determination

Client/Project: USEPA
Date/Time: 8/14/98
Sample Type: ORSAT
Ambient Temp. °F: 80

Orsat No.: O-1
Operator: SCHEFFEL
Comments:
Site Location: Under Fire Stack

B-4-4/29-1

Run No.(s)	Gas	Run 1 Actual	Run 1 Net	Run 2 Actual	Run 2 Net	Run 3 Actual	Run 3 Net	Average Net Volume %	Multiplier	Molecular Weight of Stack Gas, Md (lb/Mole)
	CO_2	4.4		4.4				4.4	0.44	1.94
	O_2[a]	15.7	11.3	15.7	11.3			11.3	0.32	3.62
	CO[b]		~~84.3~~	DS				~~84.3~~	0.28	~~23.6~~
	N_2[c]		84.3					84.3	0.28	23.6
									Md =	29.16

B-4-4/29-2

Run No.(s)	Gas	Run 1 Actual	Run 1 Net	Run 2 Actual	Run 2 Net	Run 3 Actual	Run 3 Net	Average Net Volume %	Multiplier	Molecular Weight of Stack Gas, Md (lb/Mole)
	CO_2	5.5	5.5	5.5	5.5			5.5	0.44	
	O_2[a]	15.0	9.5	15.1	9.6			9.55	0.32	
	CO[b]								0.28	
	N_2[c]								0.28	
									Md =	

8/15/98

Run No.(s)	Gas	Run 1 Actual	Run 1 Net	Run 2 Actual	Run 2 Net	Run 3 Actual	Run 3 Net	Average Net Volume %	Multiplier	Molecular Weight of Stack Gas, Md (lb/Mole)
	CO_2	5.0	5.0	5.0				5.0	0.44	
	O_2[a]	15.5	10.5	15.4	10.4			10.45	0.32	
	CO[b]								0.28	
	N_2[c]								0.28	
									Md =	

[a] O_2 Net Volume is O_2 actual reading minus CO_2 actual reading.

[b] CO Net Volume is CO actual reading minus O_2 actual reading.

[c] N_2 Net Volume is 100 minus CO actual reading.

PACIFIC ENVIRONMENTAL SERVICES, INC.

METHOD 18 FIELD DATA SHEET

Plant: EPA COK Bethlehem Steel
Date: 8-13-98
Location: Underfire outlet
Run #: B-U-M5506-1
Stack I.D.: 177"
Pbar: 29.8
Sample Tube #: B-U-M5506-1, Tube A, B, C
Operators: TA
Leak Check: Pre: ✓ Post: ✓

Tested Analyte: PAH
Orifice Tank #: —
Pump/Rotometer #: V-6
Pt: Pretest (mm Hg): —
Post-Test (mm Hg): —
Tt: Pretest (°F): —
Post-Test (°F): —
Time: Start: — Finish: — Total: —
W/B: — D/B: — O_2: 15 CO_2: 5

Time	Gauge Vacuum (Hg)	Flow Setting

Pre
0 @ 1" Hg

	Traverse Point Number (Vm)		Velocity Head in. H_2O (Vav)	Stack Temp. °F (Rot)	Tm
1103	0	0.0	3	88	88
1118	15	16.0	4	~~16~~ 88	~~94~~ 94
1133	30	36	6	95	99
post change 1150	45	50	6	98	101
1205	60	66	6	90	103
1220	75	83	6	84	108
1235	90	98	6	90	113
1250	105	128	6	103	114
1305	120	142	5	108	116
1320	125	160.94	5	108	117
Averages ⇒		160.4	$\bar{v}$ = 5.3	95.2	105.3

Post
@
0 @ 15" Hg

$Md = (0.44 \times \%CO_2) + (0.32 \times \%O_2) + (0.28 \times \%N_2)$

$Md = (0.44 \times \quad) + (0.32 \times \quad) + (0.28 \times \quad)$

$Md =$

$Ms = Md \times (1 - \frac{\%H_2O}{100}) + 18 (\frac{\%H_2O}{100})$

$Ms = (\quad) \times (1 - \frac{\quad}{100}) + 18 (\frac{\quad}{100})$

$Ms =$

$Ts = \quad °F = \quad °R \ (°F + 460)$

$Ps = Pb + \frac{S.P.}{13.6} = (\quad) + \frac{\quad}{13.6}$

$Ps = \quad$ in. Hg

$\overline{\sqrt{\Delta P}} =$

$Vs = 85.49 \times Cp \times \overline{\sqrt{\Delta P}} \times \sqrt{\frac{Ts\ (°R)}{Ps \times Ms}}$

$Vs = 85.49 \times (\quad) \times (\quad) \times \sqrt{\quad}$

$Vs = \quad$ ft/s

$As = \quad ft^2$

$Qs = Vs \times As \times 60$ s/m

$Qs = \quad \times \quad \times 60$

$Qs = \quad$ acfm

$Qs_{std} = Qs \times 17.647 \times \frac{Ps}{Ts} \times (1 - \frac{\%H_2O}{100})$

$Qs_{std} = \quad \times 17.647 \times \frac{\quad}{\quad} \times (1 - \frac{\quad}{100})$

$Qs_{std} = \quad$ dscfm

88 8-7

METHOD 18 FIELD DATA SHEET

Plant: EPA Coke Bethl. Steel
Date: 8-14-98
Location: under fire outlet
Run #: B - u - m5506 - 2
Stack I.D.: 177"
Pbar: 29.8
Sample Tube #: B-u-m5506
Operators: SB
Leak Check: Pre: ✓ Post:

Tested Analyte: PAH
Orifice Tank #:
Pump/Rotometer #: V-6
Pt: Pretest (mm Hg): —
Post-Test (mm Hg): —
Tt: Pretest (°F): —
Post-Test (°F): —
Time: Start: — Finish: — Total: —
W/B: — D/B: — O_2: 15 CO_2: 5

	Time	Gauge Vacuum (Hg)	Flow Setting
Pre			
0 Δ 15"Hg			
Post			
0 Δ 15"Hg			

	Vm Traverse Point Number		VAC Velocity Head in. H_2O	Rot Stack Temp. °F	Tm
1441	0	0.0	3	93	112
1456	15	18	4	97	112
1511	20	59	4	98	114
Pot change	45	70	4	97	115
1555	60	84	4	99	111
1610	75	109	8	97	109
pot change 1640	105	136	8	96	109
1710	140	176	9	89	106
pot change 1725	155	191	9	97	103
1740	170	205	9	90	102
change 1755	180	221.36	9	90	100
Averages ⇒		221.36	6.5	94.3	108.4

$Md = (0.44 \times \%CO_2) + (0.32 \times \%O_2) + (0.28 \times \%N_2)$

$Md = (0.44 \times \quad) + (0.32 \times \quad) + (0.28 \times \quad)$

$Md =$

$Ms = Md \times (1 - \frac{\% H_2O}{100}) + 18 (\frac{\% H_2O}{100})$

$Ms = (\quad) \times (1 - \frac{\quad}{100}) + 18 (\frac{\quad}{100})$

$Ms =$

$Ts = \quad °F = \quad °R \ (°F + 460)$

$Ps = Pb + \frac{S.P.}{13.6} = (\quad) + \frac{\quad}{13.6}$

$Ps = \quad$ in. Hg

$\overline{\sqrt{\Delta P}} =$

$Vs = 85.49 \times Cp \times \overline{\sqrt{\Delta P}} \times \sqrt{\frac{Ts\ (°R)}{Ps \times Ms}}$

$Vs = 85.49 \times (\quad) \times (\quad) \times \sqrt{\quad}$

$Vs = \quad$ ft/s

$As = \quad ft^2$

$Qs = Vs \times As \times 60$ s/m

$Qs = \quad \times \quad \times 60$

$Qs = \quad$ acfm

$Qs_{std} = Qs \times 17.647 \times \frac{Ps}{Ts} \times (1 - \frac{\% H_2O}{100})$

$Qs_{std} = \quad \times 17.647 \times \frac{\quad}{\quad} \times (1 - \frac{\quad}{100})$

$Qs_{std} = \quad$ dscfm

SB 8-26

METHOD 18 FIELD DATA SHEET

Plant: EPA Cok, Bethlehem Steel
Date: 8-15-98
Location: Underfire Outlet
Run #: B-U-M5506-3
Stack I.D.: 177
Pbar: 29.65
Sample Tube #: B-U-M5506-3, Tube A,B,C
Operators: TA/BB
Leak Check: Pre: ✓ Post:

Tested Analyte: PAH
Orifice Tank #:
Pump/Rotometer #: VOST #2
Pt: Pretest (mm Hg):
Post-Test (mm Hg):
Tt: Pretest (°F):
Post-Test (°F):
Time: Start: Finish: Total:
W/B: D/B: O_2: 15 CO_2: 5

Pretest
0 @ 15" Hg

Time	Gauge Vacuum (Hg)	Flow Setting

	Vm	Vac	Rot	Tm
	~~Traverse Point Number~~	~~Velocity Head in. H2O~~	~~Stack Temp. °F~~	
0841	0 1083.00	4	1.0	74
0856	15 1098	6	1.0	79
0911	30 1112	6	0.9	82
0926	45 1128	7	1.0	88
0941	60 1148	7	1.0	91
0956	75 1160	7	1.0	94
1011	90 1172	7	1.0	96
Port change → 1035	105 1190	7	1.0	97
1050	120 1209	7	1.0	100
1105	135 1224	7	1.0	104
1115	150 1240	7	1.0	105
Port change → 1150	165 1256	7	1.0	109
1205	180 1272.14	7	1.0	111
Averages ⇒	199.4	6.6	1.0	94.6

$Md = (0.44 \times \%CO_2) + (0.32 \times \%O_2) + (0.28 \times \%N_2)$

$Md = (0.44 \times \quad) + (0.32 \times \quad) + (0.28 \times \quad)$

$Md =$

$Ms = Md \times (1 - \frac{\%H_2O}{100}) + 18 (\frac{\%H_2O}{100})$

$Ms = (\quad) \times (1 - \frac{}{100}) + 18 (\frac{}{100})$

$Ms =$

$Ts = \quad °F = \quad °R \ (°F + 460)$

$Ps = Pb + \frac{S.P.}{13.6} = (\quad) + \frac{}{13.6}$

$Ps = \quad$ in. Hg

$\sqrt{\overline{\Delta P}} =$

$Vs = 85.49 \times Cp \times \sqrt{\overline{\Delta P}} \times \sqrt{\frac{Ts\ (°R)}{Ps \times Ms}}$

$Vs = 85.49 \times (\quad) \times (\quad) \times \sqrt{\quad}$

$Vs = \quad$ ft/s

$As = \quad ft^2$

$Qs = Vs \times As \times 60$ s/m

$Qs = \quad \times \quad \times 60$

$Qs = \quad$ acfm

$Qs_{std} = Qs \times 17.647 \times \frac{Ps}{Ts} \times (1 - \frac{\%H_2O}{100})$

$Qs_{std} = \quad \times 17.647 \times \frac{}{} \times (1 - \frac{}{100})$

$Qs_{std} = \quad$ dscfm

SB
8-26-98

FIELD DATA SHEET

Plant: Coke Bethl Steel (EPA)
Sampling Location: underfire stack
Run Number: 2-U-M315-1 Date: 8-14-98
Pretest Leak Rate: .002 cfm @ 15 in. Hg.
Pretest Leak Check: Pitot: ✓ Orsat: ✓
h= ~~308~~ 316 SB

Sample Type: M315 Operator: SB
Pbar: 29.8 Ps: -.80
CO2: 5 O2: 10
Probe Length/Type: 8' glass Pitot #: 8C
Stack Diameter: 177" As: 170.8

Nozzle ID: .442 Thermocouple #: 8C
Assumed Bws: 14 Filter #: 080798-17
Meter Box #: MB5 Y: 0.98 ΔH@: 1.770
Post-Test Leak Rate: .001 cfm @ 4 in. Hg.
Post-Test Leak Check: Pitot: ✓ Orsat: ✓

Traverse Point Number	Sampling Time (min)	Clock Time (24-hour clock)	Gas Meter Reading (Vm) ft³	Velocity Head (Δp) in H2O	Orifice Pressure Differential (ΔH) in H2O Desired	Actual	Stack Temp. (Ts)	Temperature °F Probe	Filter	Impinger Temp. °F	Dry Gas Meter Temp. Inlet (Tm in °F)	Outlet (Tm out °F)	Pump Vacuum (in. Hg)
0	0	0921	283.386										
1	15	0937	293.5	.06	1.14	1.14	437	237	267	63	80	79	3
2	30	0951	302.9	.06	1.1	1.1	446	260	347	63	87	82	3
Leak Check - 3	45	1006	312.825/313.275	.06	1.2	1.2	444	264	262	64	91	86	3
1	60	1101	322.7	.05	.99	.99	424	308	261	64	95	88	3
- 0.45 2	75	1116	332.1	.06	1.2	1.2	425	261	280	56	98	94	3
Leakclock - 3	90	1146	341.065/341.430	.05	.96	.96	462	262	263	60	99	96	3
- .365 1	105	1201	350.2	.05	.98	.98	435	294	262	61	96	94	3
2	120	1216	358.1	.04	.78	.78	437	260	280	53	96	93	3
3	135	1240	365.066/365.111	.03	.59	.59	445	259	261	64	102	97	3
Leak check - 1	150	1255	371.5	.03	.58	.58	465	258	259	66	104	104	3
- .111 2	165	1310	377.1	.02	.40	.40	444	276	259	51	105	104	3
3	180	1325	383.329	.02	.39	.39	461	265	261	60	105	105	2

✓ ΔVm= 99.017 √Δp= .2067 ✓ ΔH= ~~.8516~~ .8592 Ts= 444 ✓ Tm= 95 ✓

Us= ~~15.1~~ SB
Acfm ~~159,566~~ SB
Dscfm ~~79,679~~ SB
Iso ~~103%~~ SB

JZ

PACIFIC ENVIRONMENTAL SERVICES, INC

4700 Duke Drive, Suite 150
Mason, Ohio 45040
513.398.2556 FAX: 513.398.3342

Sample Train Recovery Data

Plant: EPA Coke Bethlehem Steel Date: 8/14/98

Sampling Location: Under fire stack

Sample Recovery Person: RWJ / RK Field Team Leader: DS

Sampling Method Type: M5

Run Number: B-U-315-1 Impinger Train ID: N-5

Job Number: 5506.000

Comments:

Front Half Data

Filter No.: 080798-17 Filter Media Type: Tared Glass Fiber

Filter Description: fine black particulate

Filter No.: — Filter Media Type: —

Filter Description: —

Back Half Data

Impinger Purge- —

Start Time: — Flow Rate: — Stop Time: — Purge Gas: —

	Impinger 1	Impinger 2	Impinger 3
Contents:	HPLC	HPLC	Empty
Final Volume: (ml)	899.3	836.3	496.6
Initial Volume: (ml)	659.5	709.0	488.8
Net Volume: (ml)	239.8	127.3	7.8

	Impinger 4	Impinger 5	Silica Gel
Contents:	—	—	Sil Gel
Final Volume: (ml)	—	—	(g): 733.0
Initial Volume: (ml)	—	—	(g): 905.1
Net Volume: (ml)	—	—	(g): 27.9

Total Moisture Collected (ml): 402.8 ✓

Description of Impinger catch: Clear

SB
8-25-9

FIELD DATA SHEET

K = 29.8

Plant: Coke (EPA) Bethl. steel
Sampling Location under fire stack
Run Number: B-4-M315-2 Date: 8-14-98
Pretest Leak Rate: .005 cfm @ 15 in. Hg.
Pretest Leak Check: Pitot: ✓ Orsat: ✓

Sample Type: M315 Operator: SB
Pbar: 29.8 Ps: -.81
CO2: 5 O2: 10
Probe Length/Type: 7' glass Pitot #: 7D
Stack Diameter: 177" As: 170.8

Nozzle ID: .435 Thermocouple #: 7D
Assumed Bws: 14 Filter #: 080798-12
Meter Box #: MB5 Y: 0.98 ΔH@: 1.770
Post-Test Leak Rate: .002 cfm @ 3 in. Hg.
Post-Test Leak Check: Pitot: ✓ Orsat: ✓

	Traverse Point Number	Sampling Time (min)	Clock Time (24-hour clock)	Gas Meter Reading (Vm) ft³	Velocity Head (Δp) in H2O	Orifice Pressure Differential (ΔH) in H2O Desired	Actual	Stack Temp. (Ts)	Temperature °F Probe	Filter	Impinger Temp. °F	Dry Gas Meter Temp. Inlet (Tm in °F)	Outlet (Tm out °F)	Pump Vacuum (in. Hg)
	0	0	1441	385.050										
	1	15	1456	391.6	.02	.38	.38	441	239	261	58	109	109	1
	2	30	1511	397.0	.02	.37	.37	456	259	261	63	107	106	1
Leak check	3	45	1535	402.742/402.955	.02	.36	.36	469	258	266	69	110	107	1
	1	60	1550	408.7	.02	.37	.37	449	264	260	64	112	111	1
	2	75	1605	414.3	.02	.37	.37	454	265	258	65	107	108	1
Leak check	3	90	1620	421.069/421.162	.03	.56	.56	444	257	262	64	104	109	1
	1	105	1630	427.9	.03	.55	.55	450	254	258	64	102	102	1
	2	120	1645	434.7	.03	.56	.56	433	255	264	61	102	99	1
	3	135	1700	442.421	.04	.73	.73	451	258	261	60	102	99	1
Leak check	1	150	1725	442.509 / 450.1	.04	.73	.73	446	259	260	60	95	95	1
	2	165	1740	458.7	.05	.90	.90	468	260	257	60	99	95	1
	3	180	1755	467.235	.05	.90	.90	454	245	259	59	97	93	1
			1809 ↳ stop time											

V=130
ACFM: 13329
DSCFM 6 3465
I = 108%

ΔVm= ~~81.936~~ $\overline{\sqrt{\Delta p}}$= .1728 ✓ $\overline{\Delta H}$= 0.565 ✓ $\overline{Ts}$= 451 ✓ $\overline{Tm}$= 103 ✓

SB ~~82.235~~ 81.886 = 0.799 = 0.801

SB 8-14-98

PACIFIC ENVIRONMENTAL SERVICES, INC

4700 Duke Drive, Suite 150
Mason, Ohio 45040
513.398.2556 FAX: 513.398.3342

Sample Train Recovery Data

Plant: Bethlehem Steel Date: 8/15/98
Sampling Location: Underfire Stack
Sample Recovery Person: RD/RK Field Team Leader: D Schaffel
Sampling Method Type: EPA 315
Run Number: U-315-2 Impinger Train ID: N-7
Job Number: 5506.000

Comments:

Front Half Data

Filter No.: 080798-12 Filter Media Type: Tared Glass Fiber
Filter Description: light grey, medium loading
Filter No.: — Filter Media Type: —
Filter Description: —

Back Half Data

Impinger Purge-
Start Time: — Flow Rate: — Stop Time: — Purge Gas: —

	Impinger 1	Impinger 2	Impinger 3
Contents:	HPLC H_2O	HPLC H_2O	Empty
Final Volume: (ml)	962.6 ~~477.8~~	Run ~~560~~ 660.7	477.5
Initial Volume: (ml)	677.8	630.7	474.4
Net Volume: (ml)	284.8 ✓	30.0 ✓	3.1 ✓

	Impinger 4	Impinger 5	Silica Gel
Contents:	—	—	Si/Gel
Final Volume: (ml)	—	—	(g): 830.9
Initial Volume: (ml)	—	—	(g): 814.6
Net Volume: (ml)	—	—	(g): 16.3 ✓

Total Moisture Collected (ml): 334.2 ✓
Description of Impinger catch: clear

SB 8-25-98

FIELD DATA SHEET

K= 50.93

Plant: Coke Bethl. Steel (EPA)
Sampling Location under fire stack
Run Number: 1-4-M315-3 Date: 8-15-98
Pretest Leak Rate: .003 cfm @ 15 in. Hg.
Pretest Leak Check: Pitot: ✓ Orsat: ✓

Sample Type: M315 Operator: SB
Pbar: 29.65 Ps: -.87
CO2: 5 O2: 15
Probe Length/Type: 8' glass Pitot #: 8C
Stack Diameter: 177" As: 170.8 ft²

Nozzle ID: .498 Thermocouple #: 8C
Assumed Bws: 14 Filter #: 08079801
Meter Box #: MB 5 Y: 0.981 ΔH@: 1.770
Post-Test Leak Rate: .002 cfm @ 5 in. Hg.
Post-Test Leak Check: Pitot: ✓ Orsat: ✓

	Traverse Point Number	Sampling Time (min)	Clock Time (24-hour clock)	Gas Meter Reading (Vm) ft³	Velocity Head (Δp) in H2O	Orifice Pressure Differential (ΔH) in H2O Desired	Orifice Pressure Differential (ΔH) in H2O Actual	Stack Temp. (Ts)	Temperature °F Probe	Temperature °F Filter	Impinger Temp. °F	Dry Gas Meter Temp. Inlet (Tm in °F)	Dry Gas Meter Temp. Outlet (Tm out °F)	Pump Vacuum (in. Hg)
	0	0	0838	470.304										
Port A	1	5	0843	474.5	.07	2.1	2.1	~~251~~ 439	250	257	60	83	83	4
		10	0848	478.2	.05	1.6	1.6	418	258	264	57	84	84	4
		15	0853	482.1	.06	1.9	1.9	428	258	262	60	85	83	4
	2	20	0858	486.2	.06	1.9	1.9	437	257	261	63	86	83	4
		25	0903	490.5	.06	1.8	1.8	449	263	259	63	88	84	4
		30	0908	494.5	.05	1.6	1.6	434	260	260	56	90	88	4
	3	35	0913	497.8	.05	1.6	1.6	433	257	260	56	88	90	4
		40	0918	501.7	.03	.93	.93	438	260	257	62	90	90	4
		45	0923	504.811	.04	1.2	1.2	448	259	256	53	91	88	3
-0.121 Leak check												~~85~~	~~86~~	~~5~~ 48
	0	~~60~~	0933	504.932	~~.06~~									
Port B	1	~~60~~ 50	0938	508.4	.06	1.9	1.9	438	252	257	60	85	86	4
		~~75~~ 55	0943	512.4	.06	1.9	1.9	447	253	258	54	93	90	4
		~~90~~ 60	0948	516.2	.06	1.9	1.9	419	260	255	48	94	90	4
	2	~~105~~ 65	0953	520.4	.06	1.9	1.9	438	260	253	49	96	91	4
		~~120~~ 70	0958	524.5	.07	2.2	2.2	447	257	259	51	96	91	5
		75	1003	528.6	.06	1.8	1.8	456	258	255	50	97	92	4
	3	80	1008	532.5	.06	1.9	1.9	417	260	258	51	97	93	4
		85	1013	536.7	.06	1.9	1.9	427	259	259	51	98	95	4
Leak check -0.336		90	1018	540.570	.06	1.9	1.9	451	254	258	52	99	94	4

DS

✓ 135.91 → ΔVm= ~~70.145~~ $\overline{\sqrt{\Delta p}}$= 0.2276 $\overline{\Delta H}$= 1.652 $\overline{Ts}$= 438 $\overline{Tm}$= 95

J2

Plant Name: Coke Bethl. Steel (EPA) **Test Date:** 8-15-98

Run Number: B-K-M315-3 **Operator:** SB

	Traverse Point Number	Sampling Time, (min.)	Clock Time (24-hour clock)	Gas Meter Reading (V_m) ft³	Velocity Head (ΔP_s) in. H_2O	Orifice Pres. Differential (ΔH) in. H_2O Desired	Orifice Pres. Differential (ΔH) in. H_2O Actual	Stack Temp. °F (T_s)	Probe Temp. / Filter Temp. °F	Impinger Temp. °F	Dry Gas Meter Temp. Inlet ($T_{m_{in}}$) °F	Dry Gas Meter Temp. Outlet ($T_{m_{out}}$) °F	Pump Vacuum In. Hg
Port-C	0	0	1031	540.906	.05	1.6	1.6	439	265 / 257	53	92	95	4
	1	95	1036	544.4	.06	1.9	1.9	444	259 / 260	51	94	94	4
		100	1041	548.2	.05	1.6	1.6	437	260 / 262	51	97	95	4
		105	1046	552.1	.05	1.6	1.6	442	259 / 259	50	97	96	4
	2	110	1051	556.0	.05	1.6	1.6	425	262 / 260	56	98	95	4
		115	1056	559.5	.05	1.6	1.6	432	254 / 259	57	99	96	4
		120	1101	563.2	.05	1.6	1.6	440	253 / 257	58	100	96	4
	3	125	1106	566.8	.05	1.6	1.6	430	260 / 258	59	100	97	4
-0.018		130	1111	570.5	.05	1.6	1.6	428	262 / 260	61	101	96	4
Leak check		135	1116	574.287	.05	1.6	1.6	441	260 / 259	61	103	98	4
Port D	0	140	1118	574.305					/		~~100~~	~~105~~	~~4~~
	1	145	1123	578.5	.05	1.6	1.6	430	259 / 256	60	100	100	4
		150	1128	582.0	.05	1.6	1.6	433	261 / 257	60	106	102	4
		155	1133	585.8	.05	1.6	1.6	443	260 / 257	55	107	104	4
	2	160	1138	589.4	.05	1.6	1.6	451	259 / 259	52	108	103	4
		165	1143	593.0	.04	1.3	1.3	450	254 / 259	53	109	105	4
		170	1148	596.4	.04	1.3	1.3	435	257 / 259	54	109	106	4
	3	175	1153	600.0	.04	1.3	1.3	454	259 / 256	54	107	105	4
		180	1158	603.2	.04	1.3	1.3	455	258 / 260	53	105	103	4
		185	1203	606.689	.04	1.3	1.3	443	259 / 260	54	105	105	4
			/						/				
			/						/				
			/						/				
			/						/				

65.783 - (0.018 Leak Check) = 65.765

JC

PACIFIC ENVIRONMENTAL SERVICES, INC

4700 Duke Drive, Suite 150
Mason, Ohio 45040
513.398.2556 FAX: 513.398.3342

Sample Train Recovery Data

Plant: EPA Coke Bethlehem Steel Date:

Sampling Location: Under fire

Sample Recovery Person: RWM Field Team Leader: DS

Sampling Method Type: M315 ewm2

Run Number: B-U-315-~~DRS~~ Impinger Train ID: N-5

Job Number: 5506.000

Comments:

Front Half Data

Filter No.: 0C 079801 Filter Media Type: Treated glass fiber

Filter Description: Gray loading, medium loading

Filter No.: Filter Media Type:

Filter Description:

Back Half Data

Impinger Purge-

Start Time: — Flow Rate: — Stop Time: — Purge Gas: —

	Impinger 1	Impinger 2	Impinger 3
Contents:	HPLC	HPLC	Empty
Final Volume: (ml)	867.6	926.3	568.7
Initial Volume: (ml)	590.4	708.8	558.8
Net Volume: (ml)	277.2	217.5	9.9

	Impinger 4	Impinger 5	Silica Gel
Contents:	—	—	Sil Gel
Final Volume: (ml)	—	—	(g): 987.0
Initial Volume: (ml)	—	—	(g): 957.4
Net Volume: (ml)	—	—	(g): 29.6

Total Moisture Collected (ml): 534.2 ✓

Description of Impinger catch: CLEAR

JC

PACIFIC ENVIRONMENTAL SERVICES, INC

4700 Duke Drive, Suite 150
Mason, Ohio 45040
513.398.2556 FAX: 513.398.3342

Sample Train Recovery Data

Plant: Bethlehem Steel Date: 8/15/98

Sampling Location: Underfire

Sample Recovery Person: RW PZ Field Team Leader: DS

Sampling Method Type: M315

Run Number: B-U-315-FB Impinger Train ID: N-2

Job Number: 5506.000

Comments:

Front Half Data

Filter No.: 080798-21 Filter Media Type: Tared Treated glass fiber

Filter Description: no particulate

Filter No.: Filter Media Type:

Filter Description:

Back Half Data

Impinger Purge-

Start Time: Flow Rate: Stop Time: Purge Gas:

	Impinger 1	Impinger 2	Impinger 3
Contents:	HPLC	HPLC	Empty
Final Volume: (ml)	613.8	620.8	481.7
Initial Volume: (ml)	614.0	621.5	482.5
Net Volume: (ml)	-.2	-.7	-.8

	Impinger 4	Impinger 5	Silica Gel
Contents:			Sil Gel
Final Volume: (ml)			(g): 836.8
Initial Volume: (ml)			(g): 835.8
Net Volume: (ml)			(g): 1.0

Total Moisture Collected (ml): -.7

Description of Impinger catch: Clear

SB
8-26

FIELD DATA SHEET

Plant: Bethlehem Steel
Sampling Location: Underfire
Run Number: B-4-429-1 Date: 8-19-98
Pretest Leak Rate: 0.006 cfm @ 15 in. Hg.
Pretest Leak Check: Pitot: ✓ Orsat: N/A

Sample Type: 429 Operator: NN
Pbar: 29.8 Ps: -0.83
CO2: 5 O2: 10
Probe Length/Type: 8' 9/625 Pitot #: 7a
Stack Diameter: 177" As: 170.9
K = ~~29.1~~ 17.3

Nozzle ID: 0.442 Thermocouple #: T-7A
Assumed Bws: 14 Filter #: Teflon
Meter Box #: 1.784 Y: 1.004 ΔH@: 1.784
Post-Test Leak Rate: .006 cfm @ 18 in. Hg.
Post-Test Leak Check: Pitot: ✓ Orsat: —

	Traverse Point Number	Sampling Time (min)	Clock Time (24-hour clock)	Gas Meter Reading (Vm) ft³	Velocity Head (Δp) in H2O	Orifice Pressure Differential (ΔH) in H2O Desired	Actual	Stack Temp. (Ts)	Temperature °F Probe	Filter	Impinger Temp. °F	Dry Gas Meter Temp. Inlet (Tm in °F)	Outlet (Tm out °F)	Pump Vacuum (in. Hg)	°F XAD
look chart	A-1	0	0921	941.452	0.07	1.2	1.2	479	253	251	69	99	100	5	61
	2	15	0936	950.9	0.07	1.2	1.2	467	246	260	62	106	105	7	58
	3	30	0951	959.1	0.06	1.03	1.0	458	246	269	58	107	103	7	58
-1.466	B-1	45	1006/1009	967.896/968.316	0.05	0.87	0.87	425	245	256	63	111	111	8	0.003 @ 10"
	2	60	~~1021~~	~~969.3~~ 976.6	0.09	0.69	0.69	440	240	259	61	118	113	10	56
	3	75	~~1035~~ 1038	984.1	0.09	0.69	0.69	431	243	256	61	121	116	12	56
-.014	C-1	90	1035/1148	991.997/992.011	0.05	0.87	0.87	434	240	255	64	117	116	13	56
	2	105	1203	1000.0	0.05	0.87	0.87	437	242	260	60	120	117	14	56
	3	120	1218	1008.6	0.05	0.87	0.87	459	241	256	60	123	119	15	56
-.183	D-1	135	1233/1240	1017.563/1017.746	0.04	0.69	0.69	465	240	257	62	125	123	12	56
	2	150	1255	1024.5	0.04	0.69	0.69	465	241	258	61	129	121	17	56
	3	165	1310	1032.3	0.04	0.69	0.69	470	243	255	60	125	122	17	56
		180	1325	1039.818	—	—	—	—	—	—	—	—	—	—	

✓ΔVm= 96.703 $\overline{\sqrt{\Delta p}}$= .2224 ✓ $\overline{\Delta H}$= .86 ✓ $\overline{T_s}$= 453 ✓ $\overline{T_m}$= 115 ✓

V = 16.72
ACFM = 171370
DSCFM = 82221
I
Iso 922

PACIFIC ENVIRONMENTAL SERVICES, INC

4700 Duke Drive, Suite 150
Mason, Ohio 45040
513.398.2556 FAX: 513.398.3342

Sample Train Recovery Data

Plant: Coke Bethlehem EPA Date: 8/14/98

Sampling Location: underfire 1

Sample Recovery Person: RWJ RR Field Team Leader: DS

Sampling Method Type: Method 429

Run Number: B-U-429-1 Impinger Train ID: RTP 24

Job Number: 5506.000

Comments:

Front Half Data

Filter No.: NA Filter Media Type: Teflon mat

Filter Description: Light grey, medium loading - fine particulate

Filter No.: Filter Media Type:

Filter Description:

Back Half Data

	XAD-Trap	Impinger 1	Impinger 2
Contents:		Empty	$NaHCO_3/Na_2CO_3$
Final Volume: (ml)	371.4	840.9	683.5
Initial Volume: (ml)	350.8	495.0	684.3
Net Volume: (ml)	20.6	345.9	-0.8

	Impinger 3	Impinger 4	Silica Gel
Contents:	$NaHCO_3/Na_2CO_3$	Empty	Silgel
Final Volume: (ml)	625.7	586.9	(g): 876.8
Initial Volume: (ml)	627.7	585.3	(g): 845.9
Net Volume: (ml)	-2.0	1.6	(g): 30.9

Total Moisture Collected (ml): ~~375.6~~ JC 396.2

Description of Impinger catch: CLEAR

JC

$\frac{17.679}{98.366 + 17.679} = 15\%$

FIELD DATA SHEET

Plant: Bethlehem Steel
Sampling Location: Underfire
Run Number: U-0-429-2 Date: 8-14-98
Pretest Leak Rate: 0.001 cfm @ 17 in. Hg.
Pretest Leak Check: Pitot: ✓ Orsat: N/A

Sample Type: 929 Operator: NN
Pbar: 29.8 Ps: -0.83
CO2: 5 O2: 10
Probe Length/Type: 8' Pitot #: 70
Stack Diameter: 177" As: 170.9
K = 17.5

Nozzle ID: 0.434 Thermocouple #: 70
Assumed Bws: 1.4 Filter #: Teflon
Meter Box #: 3 Y: 1.004 ΔH@: 1.784
Post-Test Leak Rate: 0.006 cfm @ 14 in. Hg.
Post-Test Leak Check: Pitot: ✓ Orsat: N/A

	Traverse Point Number	Sampling Time (min)	Clock Time (24-hour clock)	Gas Meter Reading (Vm) ft³	Velocity Head (Δp) in H2O	Orifice Pressure Differential (ΔH) in H2O Desired	Actual	Stack Temp. (Ts)	Temperature °F Probe	Filter	Impinger Temp. °F	Dry Gas Meter Temp. Inlet (Tm in °F)	Outlet (Tm out °F)	Pump Vacuum (in. Hg)
	1	0	1442	1st 49.18	0.08	1.38	1.4	451	240	256	64	125	126	5
	2	35	1457	50.8	0.08	1.38	1.4	468	242	255	60	127	122	8
-.041	3	30	1512	61.0	0.06	1.05	1.1	467	245	259	60	127	122	8
	1	45	1527/1530	71.493/71.584	0.04	0.70	0.70	456	249	261	63	122	121	6
	2	60	1551	78.9	0.07	1.2	1.2	461	247	260	60	117	118	7
	3	75	1606.	88.4	0.07	1.2	1.2	460	248	261	60	100	116	8
-1.000 JC	1	90	1621	98.301/89.416	0.04	0.90	0.90	454	244	260	62	115	113	7
1.026	2	105	1636	100.0	0.06	0.90	0.90	452	244	261	63	116	112	7
	3	120	1651	110.2	0.06	0.90	0.90	450	246	260	62	94	93	8
-.024	1	135	1704/14	121.3	0.08	1.38	1.4	427	241	256	61	90	89	12
	2	150	1739	131.3	0.07	1.2	1.2	424	245	255	61	92	85	13
	3	165	1754	141.6	0.07	1.2	1.2	433	250	251	61	90	86	13
		180	1809	150.461	—	—	—	—	—	—	—	—	—	—

✓ ΔVm= 107.900 $\overline{\sqrt{\Delta p}}$= 0.2572 $\overline{\Delta H}$= 1.125 $\overline{Ts}$= 448 $\overline{Tm}$= 109

JC

PACIFIC ENVIRONMENTAL SERVICES, INC

4700 Duke Drive, Suite 150
Mason, Ohio 45040
513.398.2556 FAX: 513.398.3342

Sample Train Recovery Data

Plant: Bethlehem Steel-EGA Coke - Chesterton, Indiana Date: 8/18/98
Sampling Location: Under Fire (Combustion) Stack Outlet - #2
Sample Recovery Person: RK/RD Field Team Leader: D Schuffel
Sampling Method Type: CARB 429
Run Number: B-U-429-2 Impinger Train ID: N-4
Job Number: 5506.000

Comments: 3 hour test run
Acidic smell to knockout condensate

Front Half Data

Filter No.: B-U-429-2 Filter Media Type: Teflon mat
Filter Description: Light gray, medium loading
Filter No.: Filter Media Type:
Filter Description:

Back Half Data

	XAD-Trap	Dundard Impinger 1	Impinger 2
Contents:	XAD-2 resin		$NaHCO_3/Na_2CO_3$
Final Volume: (ml)	359.6	980.3	613.4
Initial Volume: (ml)	345.4	477.2	615.4
Net Volume: (ml)	14.2	503.1	-2.0

	Impinger 3	Impinger 4	Silica Gel
Contents:	$NaHCO_3/Na_2CO_3$	Empty	Same
Final Volume: (ml)	718.6	576.1	(g): 857.6
Initial Volume: (ml)	718.9	573.0	(g): 807.2
Net Volume: (ml)	-0.3	3.1	(g): 50.4

Total Moisture Collected (ml): 568.5
Description of Impinger catch:

JC

K= 42.57

FIELD DATA SHEET

Plant: Bethlehem Steel
Sampling Location: Underfire
Run Number: B-U-429-3 Date: 8-15-98
Pretest Leak Rate: 0.002 cfm @ 15 in. Hg.
Pretest Leak Check: Pitot: ✓ Orsat: N/A

Sample Type: 429 Operator: NN
Pbar: 29.65 Ps: ~0.85
CO2: 5 O2: 15
Probe Length/Type: 8' glass Pitot #:
Stack Diameter: 177" As: 170.9
K= 25.25

Nozzle ID: 0.475 Thermocouple #:
Assumed Bws: 14 Filter #: Teflon
Meter Box #: 3 Y: 1.004 ΔH@: 1.784
Post-Test Leak Rate: cfm @ in. Hg.
Post-Test Leak Check: Pitot: Orsat:

Traverse Point Number	Sampling Time (min)	Clock Time (24-hour clock)	Gas Meter Reading (Vm) ft³	Velocity Head (Δp) in H2O	Orifice Pressure Differential (ΔH) in H2O Desired	Orifice Pressure Differential (ΔH) in H2O Actual	Stack Temp. (Ts)	Temperature °F Probe	Temperature °F Filter	Impinger Temp. °F	Dry Gas Meter Temp. Inlet (Tm in °F)	Dry Gas Meter Temp. Outlet (Tm out °F)	Pump Vacuum (in. Hg)	XAO °F
–	–	–	–											
A-1	0	0838	150.883	0.06	1.52	1.5	444	239	256	65	86	86	5	60
	5	0843	154.2	0.06	1.52	1.5	428	238	255	62	101	101	6	59
	10	0848	157.8	0.06	1.52	1.5	439	241	259	60	103	102	7	59
2	15	0853	161.4	0.06	1.52	1.5	445	242	256	60	106	104	7	59
	20	0858	164.9	0.06	1.52	1.5	452	240	256	60	106	105	7	59
	25	0903	168.2	0.06	1.52	1.5	437	243	258	60	108	104	7	58
3	30	0908	171.9	0.05	1.26	1.3	446	241	262	60	109	105	7	59
	35	0913	175.4	0.05	1.26	1.3	449	245	261	61	110	104	7	59
	40	0918	179.0	0.05	1.26	1.3	457	241	260	61	113	106	7	59
B-1	45	0923/0933	182.154/182.3	0.04	1.01	1.0	448	238	258	63	111	113	7	58
	50	0938	185.2	0.05	1.26	1.3	452	239	255	63	113	110	7	56
	55	0943	188.6	0.04	1.01	1.0	430	243	251	60	114	111	7	56
2	60	0948	192.0	0.04	1.01	1.0	450	245	280	58	115	112	7	56
	65	0953	194.8	0.04	1.01	1.0	458	242	253	58	117	113	7	56
	70	0958	197.8	0.05	1.26	1.3	467	245	256	59	117	113	7	56
3	75	1003	201.1	0.05	1.26	1.3	429	241	257	59	118	113	7	57
	80	1008	204.4	0.05	1.26	1.3	440	243	260	59	120	113	7	57
	85	1013	207.8	0.05	1.26	1.3	451	242	261	62	121	115	7	57
C-1	90	1018/1031	211.209/212.096	0.03	0.76	0.76	418	241	263	62	117	117	5	57
	95	1036	214.8	0.03	0.76	0.76	443	240	261	63	119	117	5	57
	100	1041	217.6	0.03	0.76	0.76	445	240	258	60	119	117	5	57
2	105	1046	220.3	0.04	1.0	1.0	419	241	256	59	121	118	6	57
	110	1051	223.2	0.04	1.0	1.0	430	240	260	59	122	117	6	57
	115	1056	226.3	0.04	1.0	1.0	432	241	261	58	123	117	6	57
3	120	1101	229.4	0.06	1.52	1.5	420	242	258	58	123	119	7	57
	125	1106	232.1	0.06	1.52	1.5	418	241	254	59	125	119	7	57

ΔVm= _____ $\overline{\sqrt{\Delta p}}$= _____ $\overline{\Delta H}$= _____ $\overline{Ts}$= _____ $\overline{Tm}$= _____

8-26-98 SB

FIELD DATA SHEET

Plant: Bethlehem Steel
Sampling Location: underfire
Run Number: B-4-425-3 Date: 8-15-98
Pretest Leak Rate: 0.002 cfm @ 15 in. Hg.
Pretest Leak Check: Pitot: ✓ Orsat: N/A

Sample Type: 429 Operator: NN
Pbar: 24.65 Ps: -0.85
CO2: 5 O2: 15
Probe Length/Type: 8' glass Pitot #: 7A
Stack Diameter: 177" As: 170.1
K= 25.25

Nozzle ID: 0.475 Thermocouple #: 7A
Assumed Bws: 14 Filter #: Teflon
Meter Box #: 3 Y: 1.004 ΔH@: 1.784
Post-Test Leak Rate: 0.002 cfm @ 7 in. Hg.
Post-Test Leak Check: Pitot: ✓ Orsat: ✓

Traverse Point Number	Sampling Time (min)	Clock Time (24-hour clock)	Gas Meter Reading (Vm) ft³	Velocity Head (Δp) in H2O	Orifice Pressure Differential (ΔH) in H2O Desired	Actual	Stack Temp. (Ts)	Temperature °F Probe	Filter	Impinger Temp. °F	Dry Gas Meter Temp. Inlet (Tm in °F)	Outlet (Tm out °F)	Pump Vacuum (in. Hg)	XAO °F
–	–	–	–											
A-1	0	0838	150.883	0.06	1.52	1.5	444	239	256	65	86	86	5	60
	5	0843	154.2	0.06	1.52	1.5	427	238	255	62	101	101	6	59
	10	0848	157.5	0.06	1.52	1.5	439	241	259	60	103	102	7	59
2	15	0853	161.9	0.06	1.52	1.5	445	242	256	60	106	104	7	59
	20	0858	164.9	0.06	1.52	1.5	452	240	256	60	106	105	7	59
	25	0903	168.2	0.06	1.52	1.5	437	243	258	60	108	109	7	59
3	30	0908	171.9	0.05	1.26	1.3	446	241	262	60	109	105	7	58
	35	0913	175.4	0.05	1.26	1.3	449	245	261	61	110	109	7	58
	40	0918	179.0	0.05	1.26	1.3	451	241	260	61	113	106	7	58
B-1	45	0923/0933	182.154/182.3	0.04	1.01	1.0	448	238	258	63	111	113	7	57
	50	0938	185.2	0.05	1.26	1.3	452	239	255	63	113	110	7	58
	55	0943	188.6	0.04	1.01	1.0	430	243	251	60	119	111	7	56
2	60	0948	192.0	0.04	1.01	1.0	450	245	250	58	115	112	7	56
	65	0953	194.8	0.04	1.01	1.0	458	242	253	58	117	113	7	56
	70	0958	197.8	0.05	1.26	1.3	467	245	256	59	117	113	7	56
3	75	1003	201.1	0.05	1.26	1.3	429	241	257	59	118	113	7	56
	80	1008	204.9	0.05	1.26	1.3	440	243	260	59	120	113	7	57
	85	1013	207.8	0.05	1.26	1.3	451	242	261	60	121	115	7	57
C-1	90	1018/1021	211.209/212.096	0.03	0.76	0.76	418	241	261	60	117	117	5	57
	95	1026	214.8	0.03	0.76	0.76	443	240	261	63	119	117	5	57
	100	1041	217.6	0.03	0.76	0.76	445	240	258	60	119	117	5	57
2	105	1046	220.3	0.04	1.0	1.0	419	241	256	59	121	117	6	57
	110	1051	223.2	0.04	1.0	1.0	430	240	260	59	122	117	6	57
	115	1056	226.3	0.04	1.0	1.0	432	241	261	58	123	117	6	57
3	120	1101	229.4	0.06	1.52	1.5	420	242	258	58	123	115	7	57
	125	1106	232.1	0.06	1.52	1.5	418	241	259	59	125	115	7	57

ΔVm= _____ $\overline{\sqrt{\Delta p}}$= _____ $\overline{\Delta H}$= _____ $\overline{Ts}$= _____ $\overline{Tm}$= _____

8-26-98
SB

FIELD DATA SHEET

Plant: Bethlehem Steel
Sampling Location: Under fire stack
Run Number: B-U-429-3 Date: 8-15-98
Pretest Leak Rate: — cfm @ — in. Hg.
Pretest Leak Check: Pitot: — Orsat: —

Sample Type: 429 Operator: NN
Pbar: 29.65 Ps: -0.55
CO2: 5 O2: 15
Probe Length/Type: 8' glass Pitot #: 7A
Stack Diameter: 177 As: 170.9

Nozzle ID: 0.475 Thermocouple #: 7A
Assumed Bws: 14 Filter #: Teflon
Meter Box #: 3 Y: 1.004 ΔH@: 1.784
Post-Test Leak Rate: — cfm @ — in. Hg.
Post-Test Leak Check: Pitot: — Orsat: —

Traverse Point Number	Sampling Time (min)	Clock Time (24-hour clock)	Gas Meter Reading (Vm) ft³	Velocity Head (Δp) in H2O	Orifice Pressure Differential (ΔH) in H2O Desired	Orifice Pressure Differential (ΔH) in H2O Actual	Stack Temp. (Ts)	Temperature °F Probe	Temperature °F Filter	Impinger Temp. °F	Dry Gas Meter Temp. Inlet (Tm in °F)	Dry Gas Meter Temp. Outlet (Tm out °F)	Pump Vacuum (in. Hg)	
—	—	—	—											
	130	1111	236.7	0.06	1.52	1.5	425	240	255	60	126	120	7	61
														61
0-1	135	1116/1123	240.362/241.002	0.06	1.52	1.5	426	241	256	61	121	120	7	61
	140	1128	244.6	0.06	1.52	1.5	428	242	255	60	121	121	7	61
	145	1133	248.1	0.06	1.52	1.5	430	241	257	61	122	123	7	61
2	150	1139	251.5	0.05	1.26	1.3	436	240	258	61	126	125	7	61
	155	1143	255.1	0.05	1.26	1.3	444	245	261	61	127	126	7	62
	160	1148	258.4	0.05	1.26	1.3	447	247	265	62	127	125	7	62
3	165	1153	261.6	0.05	1.26	1.3	464	249	260	61	128	125	7	62
	170	1158	264.9	0.05	1.26	1.3	461	244	261	61	128	125	7	62
	175	1203	269.5	0.05	1.26	1.3	456	246	260	61	127	124	7	62
	180	1208	272.287	—	—	—	—	—	—	—	—	—	—	

ΔVm= 119.731 $\overline{\sqrt{\Delta p}}$= .222 $\overline{\Delta H}$= 1.25 $\overline{Ts}$= 440 $\overline{Tm}$= 115

8-26-98

PACIFIC ENVIRONMENTAL SERVICES, INC

4700 Duke Drive, Suite 150
Mason, Ohio 45040
513.398.2556 FAX: 513.398.3342

Sample Train Recovery Data

Plant: Bethlehem Steel - EPA Coke ovens - Chesterton, Ind. Date: 8/15/98
Sampling Location: Vulcan Stack Outlet
Sample Recovery Person: RK/RD Field Team Leader: D. Schaffel
Sampling Method Type: Cab 429
Run Number: B-U-429-3 Impinger Train ID: N-5
Job Number: 5506.000

Comments: 3 hour test run
Acidic smell in Knockout condensate

Front Half Data

Filter No.: B-U-429-3 Tiffon mat Filter Media Type: Tiffon mat
Filter Description: Medium loading, gray particulate = fine
Filter No.: Filter Media Type:
Filter Description:

Back Half Data

	XAD-Trap	Impinger 1 (Dunkard)	Impinger 2
Contents:	XAD-2	Empty	$NaHCO_3/Na_2CO_3$
Final Volume: (ml)	366.0	833.9	623.3
Initial Volume: (ml)	348.8	495.1	628.1
Net Volume: (ml)	17.2 ✓	338.8 ✓	-4.8 ✓

	Impinger 3	Impinger 4	Silica Gel
Contents:	$NaHCO_3/Na_2CO_3$	Empty	
Final Volume: (ml)	683.9	585.5	(g): 820.4
Initial Volume: (ml)	686.4	584.7	(g): 787.1
Net Volume: (ml)	-2.5 ✓	.8 ✓	(g): 33.3 ✓

Total Moisture Collected (ml): ~~416.1~~ 382.8 ✓
Description of Impinger catch:

SB
8-26-98

FIELD DATA SHEET

Plant: Bethlehem Steel
Sampling Location: Under fire stack
Run Number: B-U-429-FB Date: 8-15-98
Pretest Leak Rate: .002 cfm @ 15 in. Hg.
Pretest Leak Check: Pitot: — Orsat: —

Sample Type: 429 Operator: SB/NN
Pbar: 29.65 Ps: —
CO2: 5 O2: 15
Probe Length/Type: 8' Pyrex glass Pitot #: 7A
Stack Diameter: 177" As: 170.9 ft²

Nozzle ID: 0.475 Thermocouple #: 7A
Assumed Bws: 14 Filter #: B-U-429-FB-Teflon
Meter Box #: 3 Y: 1.004 ΔH@: 1.784 untared
Post-Test Leak Rate: .002 cfm @ 15 in. Hg.
Post-Test Leak Check: Pitot: — Orsat: —

Traverse Point Number	Sampling Time (min)	Clock Time (24-hour clock)	Gas Meter Reading (Vm) ft³	Velocity Head (Δp) in H2O	Orifice Pressure Differential (ΔH) in H2O Desired	Orifice Pressure Differential (ΔH) in H2O Actual	Stack Temp. (Ts)	Temperature °F Probe	Temperature °F Filter	Impinger Temp. °F	Dry Gas Meter Temp. Inlet (Tm in °F)	Dry Gas Meter Temp. Outlet (Tm out °F)	Pump Vacuum (in. Hg)	Leak rate
—	0	1230	272.981											
—	15	1245	273.655	N/A	N/A	N/A	N/A	246	256	71	N/A	N/A	—	.002 @ 15
—	30	1300	274.238	N/A	↓	↓	↓	241	256	72	↓	↓	—	.002 @ 15
—	45	1315	275.012	N/A				245	255	71			—	.002 @ 15

ΔVm= — $\sqrt{\Delta p}$= — ΔH= — Ts= — Tm= —

PACIFIC ENVIRONMENTAL SERVICES, INC

4700 Duke Drive, Suite 150
Mason, Ohio 45040
513.398.2556 FAX: 513.398.3342

Sample Train Recovery Data

Plant: Bethlehem Steel - EPA Coke Date: 8/14/98
Sampling Location: Under Fire Stack
Sample Recovery Person: RK/RD Field Team Leader: D Schuttle
Sampling Method Type: Carb 429
Run Number: B-U-429-FB Impinger Train ID:
Job Number: 5506.000

Comments:

Front Half Data

Filter No.: B-U-429-FB Filter Media Type: Teflon mat
Filter Description: no loading
Filter No.: Filter Media Type:
Filter Description:

Back Half Data

	XAD-Trap	Dunkard Impinger 1	Impinger 2
Contents:	XAD-2	Empty	$NaHCO_3$ / Na_2CO_3
Final Volume: (ml)	545.4	477.1	669.8
Initial Volume: (ml)	545.2	477.1	669.8
Net Volume: (ml)	0.2	0.0	0.0

	Impinger 3	Impinger 4	Silica Gel
Contents:	$NaHCO_3$ / Na_2CO_3	Empty	
Final Volume: (ml)	731.4	530.6	(g): 886.5
Initial Volume: (ml)	731.5	530.6	(g): 886.4
Net Volume: (ml)	-0.1	0.0	(g): 0.1

Total Moisture Collected (ml): 0.2
Description of Impinger catch: clear

SB 8-26-98

FIELD DATA SHEET

Plant: Bethlehem Steel
Sampling Location: Under fire stack
Run Number: B-4-315-FB Date: 8-15-98
Pretest Leak Rate: .001 cfm @ 15 in. Hg.
Pretest Leak Check: Pitot: — Orsat: —

Sample Type: 315 Operator: SB/NN
Pbar: 29.65 Ps: —
CO2: 5 O2: 10
Probe Length/Type: 8' glass Pitot #: 8C
Stack Diameter: 177" As: 170.8 ft²

Nozzle ID: 0.435 Thermocouple #: 70
Assumed Bws: 14 Filter #: 080798-21
Meter Box #: M5 Y: 0.98 ΔH@: 1.770
Post-Test Leak Rate: .001 cfm @ 15 in. Hg.
Post-Test Leak Check: Pitot: — Orsat: —

Traverse Point Number	Sampling Time (min)	Clock Time (24-hour clock)	Gas Meter Reading (Vm) ft³	Velocity Head (Δp) in H2O	Orifice Pressure Differential (ΔH) in H2O		Stack Temp. (Ts)	Temperature °F		Impinger Temp. °F	Dry Gas Meter Temp.		Pump Vacuum (in. Hg)
					Desired	Actual		Probe	Filter		Inlet (Tm in °F)	Outlet (Tm out °F)	
—	0	1230	607.254										
—	15	1245	608.125	N/A	N/A	N/A	N/A	252	260	70	N/A	N/A	—
—	30	1300	608.966	N/A	↓	↓	↓	254	261	70	↓	↓	—
—	45	1315	609.513	N/A				250	263	70			—

Leak rate
.001 at 15
.001 at 15
.001 at 15

ΔVm= — $\overline{\sqrt{\Delta p}}$= — $\overline{\Delta H}$= — $\overline{Ts}$= — $\overline{Tm}$= —

PACIFIC ENVIRONMENTAL SERVICES, INC

4700 Duke Drive, Suite 150
Mason, Ohio 45040
513.398.2556 FAX: 513.398.3342

Sample Train Recovery Data

Plant: Bethlehem Steel Date: 8/15/94

Sampling Location: Underfire

Sample Recovery Person: RW Field Team Leader: DS

Sampling Method Type: M315

Run Number: B-U-315-FB Impinger Train ID: N-2

Job Number: 5506.000

Comments:

Front Half Data

Filter No.: 080798-21 Filter Media Type: Tared Treated glass fiber

Filter Description: no particulate

Filter No.: Filter Media Type:

Filter Description:

Back Half Data

Impinger Purge-

Start Time: Flow Rate: Stop Time: Purge Gas:

	Impinger 1	Impinger 2	Impinger 3
Contents:	HPLC	HPLC	Empty
Final Volume: (ml)	613.8	620.8	481.7
Initial Volume: (ml)	614.0	621.5	482.5
Net Volume: (ml)	-.2	-.7	-.8

	Impinger 4	Impinger 5	Silica Gel
Contents:			Sil Gel
Final Volume: (ml)			(g): 836.8
Initial Volume: (ml)			(g): 835.8
Net Volume: (ml)			(g): 1.0

Total Moisture Collected (ml): -.7

Description of Impinger catch: Clear

SB
B-26

TECHNICAL REPORT DATA

Please read instructions on the reverse before completing

1. REPORT NO. EPA-454/R-99-001a	2.	3. RECIPIENT'S ACCESSION NO.
4. TITLE AND SUBTITLE Final Report - Emissions Testing of Combustion Stack and Pushing Operations at Coke Battery No. 2 at Bethlehem Steel Corporation's Burns Harbor Division in Chesterton, Indiana Volume I of III		5. REPORT DATE February 1999 6. PERFORMING ORGANIZATION CODE
7. AUTHOR(S) Franklin Meadows Daniel F. Scheffel		8. PERFORMING ORGANIZATION REPORT NO.
9. PERFORMING ORGANIZATION NAME AND ADDRESS Pacific Environmental Services, Inc. Post Office Box 12077 Research Triangle Park, North Carolina 27709-2077		10. PROGRAM ELEMENT NO. 11. CONTRACT/GRANT NO. 68-D-98-004
12. SPONSORING AGENCY NAME AND ADDRESS U.S. Environmental Protection Agency Office of Air Quality Planning and Standards Emissions, Monitoring and Analysis Division Research Triangle Park, North Carolina 27711		13. TYPE OF REPORT AND PERIOD COVERED Final 14. SPONSORING AGENCY CODE
15. SUPPLEMENTARY NOTES		

16. ABSTRACT

The United States Environmental Protection Agency (EPA) is investigating the coke making industry to characterize hazardous air pollutants (HAPs) emitted from coke pushing operations and combustion (underfire) stacks. This test report addresses pushing emissions from a coke oven, and emissions from the combustion (underfire) stack that serves Coke Battery No. 2 at Bethlehem Steel Corporation's Burns Harbor Division in Chesterton, Indiana. The purpose of this test program was to quantify emissions from the inlet and outlet of the baghouse controlling emissions from the coke pushing operation and to quantify emissions from the combustion outlet stack. The data may be used by the EPA in the future to support a residual risk assessment for coke oven facilities.

The testing was performed to quantify uncontrolled and controlled air emissions of filterable particulate matter (PM), methylene chloride extractable matter (MCEM) and 19 polycyclic aromatic hydrocarbons (PAHs) including acenaphthene, acenaphthylene, anthracene, benzo(a)anthracene, benzo(a)pyrene, benzo(b)fluoranthene, benzo(e)pyrene, benzo(k)fluoranthene, benzo(ghi)perylene, chrysene, dibenzo(a,h)anthracene, fluoranthene, fluorene, indeno(1,2,3-cd)pyrene, 2-methylnapthalene, napthalene, perylene, phenanthrene, and pyrene. In addition, following the PM and MCEM analyses, the samples were analyzed to screen for the presence of 17 trace metals. Baghouse dust samples were also collected and analyzed for 16 trace metals. Simultaneous testing was performed at the inlet and outlet of the baghouse controlling emissions from the coke pushing operation. Sampling was also performed on the combustion outlet stack. In addition to pollutant testing, oxygen (O_2) and carbon dioxide (CO_2) were measured at each location. During the sampling program, Research Triangle Institute (RTI), another EPA contractor, monitored and recorded process and emission control system operating parameters.

This volume (Volume I) is comprised of 221 pages and consists of the report text, and Appendices: A (Process Data) and B (Raw field Data).

17. KEY WORDS AND DOCUMENT ANALYSIS

a. DESCRIPTIONS	b. IDENTIFIERS/OPEN ENDED TERMS	c. COASTI Field/Group
Baghouse Coke Ovens Emission Measurements Hazardous Air Pollutants Metals Methylene Chloride Extractable Matter Particulate Matter Polycyclic Aromatic Hydrocarbons		
18. DISTRIBUTION STATEMENT Unlimited	19. SECURITY CLASS *(This Report)* Unclassified 20. SECURITY CLASS *(This page)* Unclassified	21. NO. OF PAGES 960 22. PRICE