Note: This is a reference cited in *AP 42, Compilation of Air Pollutant Emission Factors, Volume I Stationary Point and Area Sources.* AP42 is located on the EPA web site at www.epa.gov/ttn/chief/ap42/

The file name refers to the reference number, the AP42 chapter and section. The file name "ref02_c01s02.pdf" would mean the reference is from AP42 chapter 1 section 2. The reference may be from a previous version of the section and no longer cited. The primary source should always be checked.

DCN 81-222-018-01-18

EMB Report No. 80-BYC-10

EMISSION TEST REPORT

FUGITIVE EMISSIONS TESTING AT THE REPUBLIC STEEL GADSDEN PLANT

Prepared by:

D.P. Wiesenborn, J.I. Steinmetz, and G.E. Harris
RADIAN CORPORATION
8501 Mo-Pac Boulevard
Austin, Texas 78759

Prepared for:

Dan Bivins
U.S. Environmental Protection Agency
ESED/EMB (MD-13)
Research Triangle Park, North Carolina 27711

EPA Contract No. 68-02-3542
Work Assignment No. 1
ESED No. 74/4j

11 September 1981

CONTENTS

Section		Page
1	Introduction	1
2	Summary of Results	2
3	Process Description	6
4	Methodology	8
	4.1 Screening Procedures	8
	4.2 Sampling Procedures	9
	4.3 Analytical Techniques	12
5	Quality Control/Quality Assurance	13
	5.1 Quality Control for Screening Procedures	13
	5.2 Quality Control for Analytical and sampling procedures	15
	5.2.1 Blind Standards	15
	5.2.2 Accuracy Checks	16
Appendix A		21
Appendix B		35

FIGURES

Number		Page
3-1	Light oil recovery unit, Republic Steel	7
4-1	Sampling train for baggable source of hydrocarbon emissions .	10
5-1	Mass spectrum of pure benzene on SP-2100/bentone column	17
5-2	Mass spectrum of light oil product on SP-2100/bentone	18
5-3	Mass spectrum of light oil product on TCEP	19

TABLES

Number		Page
2-1	OVA screening value distribution: Republic Steel, Gadsden Plant	3
2-2	Summary of benzene and non-methane hydrocarbon leak rates (lb/hr) from sampled sources: Republic Steel Gadsden Plant	4
2-3	Comparison of benzene content in emissions and in liquid lines: Republic Steel Gadsden Plant	5
5-1	Calibration checking of OVA and TLV	14
5-2	Blind standards data listing	16
5-3	Accuracy checks data listing	20

SECTION 1

INTRODUCTION

This report presents the results of testing for fugitive VOC (Volatile Organic Compounds) and benzene emissions at the Republic Steel plant in Gadsden, Alabama. The testing was performed by Radian Corporation on December 8 through December 12, 1980.

This work was funded and administered by the Emission Measurement Branch of the U.S. Environmental Protection Agency under Contract No. 68-02-3542. The results of this testing may be used in support of a National Emission Standard for Hazardous Air Pollutants for benzene from coke oven by-products recovery units in steel mills.

Potential sources of fugitive benzene emissions in the by-product unit were screened with a portable hydrocarbon detector to estimate the frequency of leak occurrence. Liquid and vapor benzene fugitive emission rates were quantified by collecting and analyzing samples from leaking fittings. Also, liquid samples were obtained from process lines to provide data on the proportion of benzene in process lines relative to the proportion of benzene in emissions from fittings in those lines.

The following sections present a summary of results, a description of the process configuration, the testing methodology, and QA/QC procedures. Example calculations and a full listing of data and other supplemental information are included in the appendices.

SECTION 2

SUMMARY OF RESULTS

This section presents a summary of the fugitive emission data gathered at the Republic Steel plant in Gadsden. All data are presented in the form of original data sheets in Appendix B.

The plant screening results are presented in Table 2-1. This table presents the distribution of OVA readings for each source type.

The results of the baggable sampling are presented in Table 2-2. The mass emission rates are presented in pounds per day for each source in terms of both benzene and nonmethane hydrocarbons. Mass emission rates are also presented in terms of vapor phase and liquid phase emission rate. Each source was rescreened immediately before and after bagging. The average of these two values is also presented in Table 2-2 for both the OVA and the TLV.

A comparison of the benzene concentration in vapor-phase and total emissions with the benzene concentrations in the liquid lines is presented in Table 2-3. The benzene concentration in the vapor-phase leak and the total leak (vapor plus liquid) is expressed as the ratio of the benzene emission rate to the non-methane hydrocarbon emission rate, since bag samples are diluted with air.

TABLE 2-1. OVA SCREENING VALUE DISTRIBUTION: REPUBLIC STEEL GADSDEN PLANT

OVA SCREENING VALUE (ppmv)	FLANGES		THREADED FITTINGS		VALVES		PUMPS SEALS		EXHAUSTERS	
	#[a]	%[b]	#	%	#	%	#	%	#	%
0 to 199	47	100.0	42	100.0	44	83.0	0	0.0	4	66.7
200 to 9,000	0	0.0	0	0.0	4	7.5	0	0.0	2	33.3
$\geq$ 10,000	0	0.0	0	0.0	5	9.4	4	100.0	0	0.0
Total Sources Screened	47	100.0	42	100.0	53	100.0	4	100.0	6	100.0

a) # - number of sources in each category
b) % - percent of total sources screened

TABLE 2-2. SUMMARY OF BENZENE AND NON-METHANE HYDROCARBON LEAK RATES (LB/HR) FROM SAMPLED SOURCES: REPUBLIC STEEL GADSDEN PLANT

	Sampling Date	Source ID	Mean OVA Rescreening Value[a]	Mean TLV Rescreening Value[a]	Benzene Leak Rates			Nonmethane-HC Leak Rates		
					Vapor	Liquid	Total	Vapor	Liquid	Total
Block Valves	12/10/80	23	0	.[b]	.	0.299810	.	.	0.437040	.
	12/11/80	121	10000	2590	0.000260	0.000000	0.000260	0.000915	0.000000	0.000915
		122	57501	8901	0.044714	0.040316	0.085030	0.045277	0.055379	0.100656
		123	1800	40	0.001576	0.000000	0.001576	0.002448	0.000000	0.002448
		124	65001	6301	0.131233	0.000000	0.131233	0.113854	0.000000	0.113854
		125	55000	800	0.001347	0.000000	0.001347	0.001460	0.000000	0.001460
		129	40000	4300	0.006814	0.000000	0.006814	0.006442	0.000000	0.006442
	12/12/80	73	1250	700	0.000941	0.000000	0.000941	0.001490	0.000000	0.001490
Control Valves	12/10/80	32	75000	9351	0.435302	0.000000	0.435302	0.476986	0.000000	0.476986
Pumps	12/10/80	21-S[c]	75001	9000	0.289490	0.000000	0.289490	0.370162	0.000000	0.370162
		119-S	67500	8700	0.446587	1.212200	1.658787	0.485804	1.582500	2.068304
	12/11/80	28-S	100001	10001	0.121617	0.478370	0.599987	0.130749	0.722610	0.853359
		120-S	57000	8401	0.626817	2.538640	3.165457	0.733095	3.314150	4.047245
Exhausters	12/12/80	2	2000	2450	0.001901	0.000000	0.001901	0.011467	0.000000	0.011467
		4	500	800	0.000755	0.000000	0.000755	0.005489	0.000000	0.005489

a) Average of before and after sampling screening values (given in Appendix B-2).
b) This symbol indicates that no data was taken in that category.
c) S denotes a single seal pump.

TABLE 2-3. COMPARISON OF BENZENE CONTENT IN EMISSIONS AND IN LIQUID LINES: REPUBLIC STEEL GADSDEN PLANT

Line	Temp (°F)	Press (psig)	Wt % Benzene in Line	Source ID	Wt % Benzene[a] in Vapor Leak	Wt % Benzene[b] in Total Leak
BTX Light Oil	71	35	71.5	21S[c]	79	79
				28S	93	70
				32	92	92
BTX Light Oil	50	20	71.5	119S	93	80
				120S	87	78
				121	29, HA[d]	29
				122	99	85
				123	64	64
				124	115[e]	115
				125	92	92
				129	106[e]	106

Footnotes:

a) Weight percent benzene in the vapor $= \left(\frac{\text{Vapor mass emissions of benzene}}{\text{Vapor mass emissions of NMHC}}\right) \times 100$

b) Weight percent benzene in the total leak $= \left(\frac{\text{Total mass emissions of benzene}}{\text{Total mass emissions of NMHC}}\right) \times 100$

c) S denotes a pump with a single seal

d) HA denotes high ambient: ambient benzene content at least 40 percent of sample benzene content

e) Analysis for benzene and NMHC were performed on different instruments; probably almost all of the NMHC in this sample is benzene

SECTION 3

PROCESS DESCRIPTION

The Republic Steel plant at Gadsden, Alabama operates with a wash oil absorption system to recover light oil from the coke oven gas. The crude light oil product is sent outside of the plant for refining.

During the testing period, the coke ovens were producing 1470 tons per day of coke and 22.5 MMSCFD of coke oven gas. The light oil recovery unit was recovering 5,630 gallons per day of crude BTX light oil.

A simplified flow diagram for the plant is shown in Figure 3-1. The benzolized wash oil from the scrubber is stripped with steam to separate the light oil from the wash oil. The light oil vapors then go to a rectifier. The rectifier splits the light oil into two fractions, an overhead and a bottoms fraction. The overhead fraction includes essentially all of the benzene, and is referred to as BTX light oil. These BTX vapors are condensed and the water taken out in the light oil separator.

Fugitive emissions testing was to be performed in all areas of the plant with at least 4 weight percent or more benzene. This included the stripper overhead, the BTX product, and the BTX storage and loading areas. Also screened were the exhausters, which are upstream from light oil recovery on the coke oven gas line, and are not shown in Figure 3-1. The benzolized wash oil and the rectifier bottoms (secondary oil) contain less than 4 weight percent benzene and were not screened.

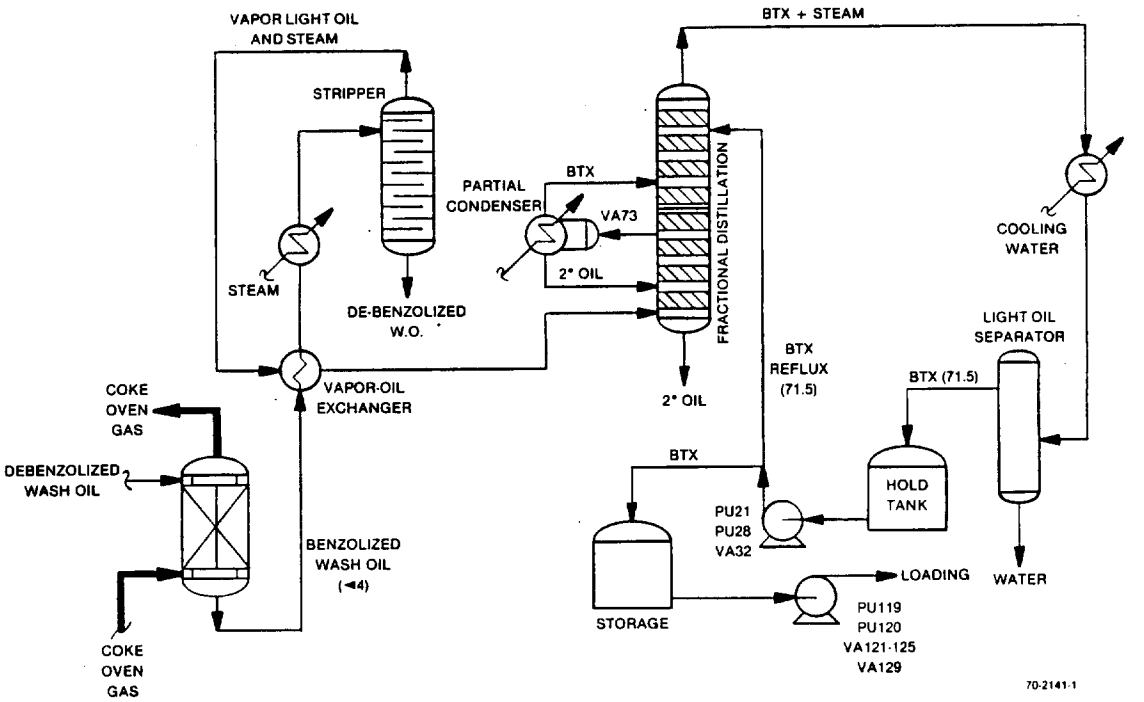

- Numbers following the letters VA and PU are source ID numbers for valves and pumps, respectively, from which fugitive emissions were detected.

- Numbers in parentheses are the weight percent benzene in that lime.

Figure 3-1. Light Oil Recovery Unit, Republic Steel.

SECTION 4

METHODOLOGY

The fugitive emissions testing at the Republic Steel Gadsden plant included both "screening" and "bagging" operations. Screening is a generic term covering any quick portable method of detecting fugitive emissions. Bagging refers to a quantitative emission measurement achieved by enclosing the source in a Mylar® shroud and analyzing an equilibrium flow of air through the enclosure.

4.1 SCREENING PROCEDURES

Screening was done according to the procedures specified in EPA's proposed Method 21, a copy of which may be found in Appendix A-2. The instrument used in performing this screening was the Century Systems Organic Vapor Analyzer (OVA) Model 108. Method 21 requires the results of the screening to be recorded (as specified in the applicable regulation) only if the leak definition is met or exceeded. Since this effort was more oriented to standards development than to regulatory monitoring, the exact screening value was recorded for all sources.

The screening methods were used to survey every accessible valve and pump, and a portion of the flanges, on lines handling at least 4 weight percent benzene. Only one-third of the flanges were screened because of their large population. Exhausters were also screened, although they are not in the light oil recovery section of the plant and the coke oven gas they handle contains less than 4 weight percent benzene. Exhausters were included because they can potentially have high emissions.

The survey was conducted on a line-by-line basis with plant flow diagrams to ensure that no sources were missed and to group sources subject to similar process conditions. Plant personnel corroborated the identification of process lines and supplied data that was not otherwise immediately available, such as the composition and phase of the material in the line.

All leaking valves, pump seals, and exhauster seals were tagged with their respective ID numbers and were subsequently bagged.

4.2 SAMPLING PROCEDURES

Bagging procedures were carried out according to methods developed in previous petroleum refinery testing. Before and after a source was sampled, it was again screened. This time, however, a J.W. Bacharach "TLV Sniffer" (TLV) was used in addition to the OVA. The OVA uses a flame ionization detector and has a quick response time that makes it ideal for the initial screening. The TLV uses a catalytic oxidation detector and has a slower response than the OVA.

The leaking area of the source was completely enclosed in a shroud of Mylar® plastic to contain any emissions. Mylar® is well suited to this function, because it does not absorb significant amounts of hydrocarbons and has a high melting point (250°C). The enclosures were kept as small as possible, generally less than one cubic foot in volume except for enclosures of exhauster seals. A small enclosure provided a more effective seal, minimized the time required to make the enclosure and reach steady-state conditions, and minimized the condensation of heavy hydrocarbons within the enclosure.

The enclosure was connected to the sampling train shown in Figure 4-1. The sampling train included a cold trap, a dry gas meter, and a vacuum pump. The vacuum pump induced a flow of air, plus any fugitive emissions contained

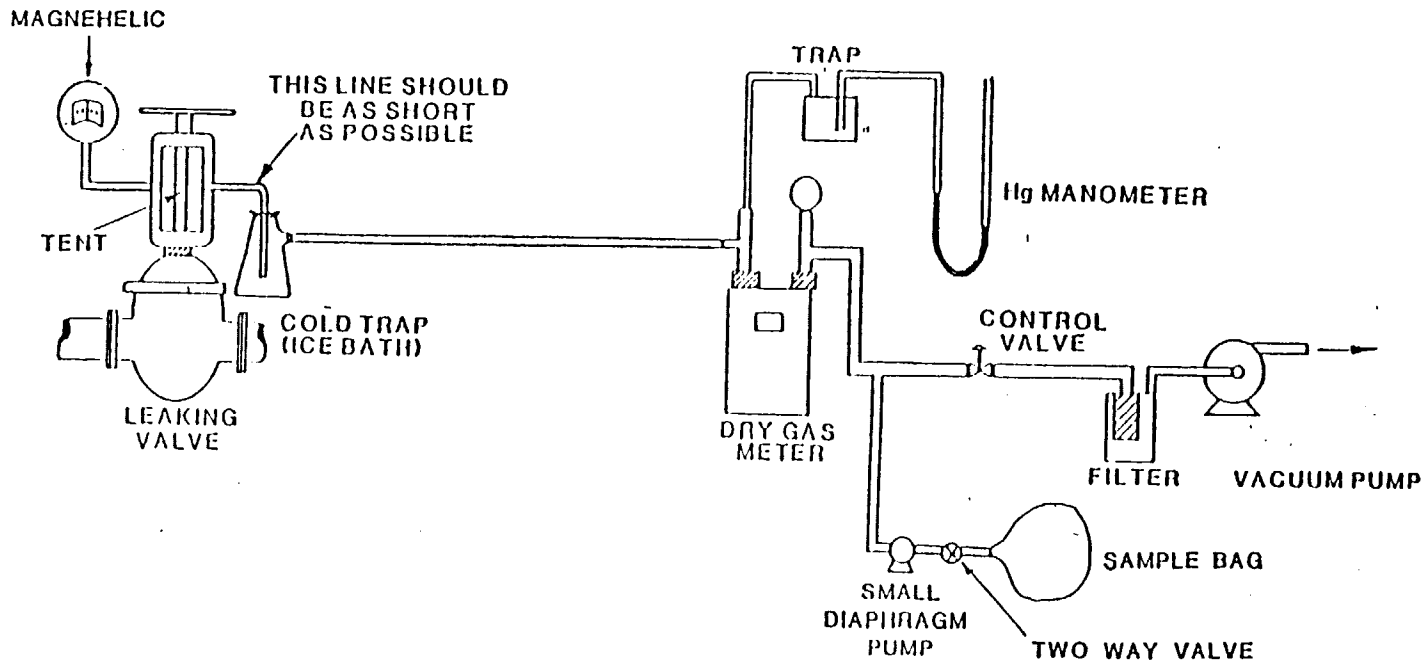

Figure 4-1. Sampling train for baggable source of hydrocarbon emissions.

within the enclosure, through the sampling train. A magnehelic connected to the enclosure with a short piece of latex tubing was used to ensure that a slight, but measurable, vacuum was maintained within the enclosure. A slight vacuum prevented fugitive emissions from leaking out of the enclosure. To obtain an adequate vacuum on the two leaking exhausters, it was necessary to connect each enclosure to two sampling trains.

The cold trap was used to condense water and heavy organics that might otherwise condense downstream in lines and equipment. This trap consisted of a 500 ml flask in an ice bath. No condensate was observed at the Gadsden plant; however, if an organic condensate were collected, it would be measured, analyzed, and included in calculating the total leak rate.

Downstream from the cold trap, a dry gas meter measured the volume of gas that passed through the sampling train. By measuring the volume of gas during a known period of time, it was possible to calculate the dry gas flow rate. The gas flow rate could be varied, and the maximum flow rate achievable was about 2.5 cubic feet per minute. The temperature and pressure of the gas were measured to allow a conversion to standard conditions.

When sufficient time had passed to allow the system to reach steady-state (generally, 4 minutes were more than adequate for an enclosure of 1 cubic foot), a Tedlar® sampling bag was filled from the discharge of the small Teflon®-lined diaphragm pump. A second Tedlar® bag was filled with a sample of ambient air near the enclosure. The two samples were then taken to the mobile lab on the plant grounds for analysis.

Liquid leak rates were estimated by capturing the liquid in a watchglass and measuring the volume collected over a known period of time. Samples of each liquid leak and of the liquids from process lines were taken back to the laboratory for benzene analysis. Sample bottles were filled to the brim to minimize any vapor overhead space that would allow the benzene in the liquid sample to become dispersed between 2 phases.

4.3 ANALYTICAL TECHNIQUES

To quantify the VOC emissions from the bagged sources, the concentration of total hydrocarbon and also that of benzene were determined using gas chromatographic procedures. Primary analysis of fugitive volatile organic compounds (VOC) was performed on a Byron 301C Total Hydrocarbon Analyzer (THC). The THC has an upper detection limit of 20,000 ppmv. Dilutions of more concentrated samples were made with a 1.5 liter gas-tight syringe.

Methane calibrations were carried out daily on the THC with an 8000 ppmv methane/air standard. Nonmethane hydrocarbon calibrations were also carried out daily on the THC with a 713 ppmw NBS propane standard.

Analyses for benzene were performed on a Hewlett Packard 5730A Dual FID Gas Chromatograph. Dual gas samples were introduced simultaneously onto separate columns with a Valco 10 port Hastalloy C multiport valve installed immediately forward of the GC syringe injection ports. Peak integrations were compiled on two Hewlett Packard 3380A electronic integrators. Liquid samples were analyzed by normal syringe injection techniques using benzene as an external standard.

The columns and conditions used for the benzene analyses are listed below:

- 1/8" OD, 2 mm ID, 15 feet, 5% SP-2100/1.75% Benton 34 on 100/120 mesh Supelcoport.
- 1/8" OD, 2 mm ID, 15 feet, 10% TCEP on 100/120 mesh Chromosorb P acid washed.
- N_2 carrier at 30 ml/min.
- Isothermal at 110°C.

The instrument was calibrated daily with a 5571 ppmw benzene in air standard. Single analyses were done simultaneously on the two different columns after calibration.

SECTION 5

QUALITY CONTROL/QUALITY ASSURANCE

5.1 QUALITY CONTROL FOR SCREENING PROCEDURES

Screening at the Gadsden plant was done with a single Century Systems Organic Vapor Analyzer (OVA) Model 108 and one J.W. Bacharach Instrument Company "TLV Sniffer." The corresponding instrument identification numbers are given below:

Device Type	Assigned ID Number
OVA	3
TLV	4

The OVA and TLV instruments were calibrated in the morning each day before they were used. Standards of 90 ppmv and 1990 ppmv hexane in air were used to obtain a two point calibration on the TLV; 7990 ppmv methane in air was used to calibrate the OVA. Before a recalibration was made each day, the values obtained from the instrument were recorded. This served two purposes:

- a check for instrument damage or malfunction, and
- a rough check of the stability of the daily calibration.

In addition to the high (and low for TLV) standard calibrations, a dilution probe was occasionally attached to the instrument and another reading was taken. The probe was set at 10:1 dilution of the high standard concentration. The calibration data is summarized in Table 5-1.

TABLE 5-1. CALIBRATION CHECKING OF OVA AND TLV

Date	OVA 3		TLV 4	
	High Standard, ppmv[a]	Dil Probe, ppmv[b]	Low Standard, ppmv[c]	High Standard, ppmv[d]
12/08/80	3700			
12/09/80	650[e]	3000		
12/10/80	7500	1100		1800
12/11/80	>10,000	700	500	2000
12/12/80	>10,000			2000

Footnotes:

a) OVA calibration standard contained 7990 ppmv methane in air
b) OVA reading with dilution probe should be 800 ppmv
c) TLV low calibration standard contained 90 ppmv hexane in air
d) TLV high calibration standard contained 1990 ppmv hexane in air
e) The low valve was caused by an instrument malfunction that was immediately corrected.

The calibration checking results do indicate some significant drift. It should be noted, however, that these readings are taken in the morning before calibration and not at the close of the screening day. It is likely that most of the calibration drift occurs due to the overnight shutdown and recharge rather than during the days screening. The phenomenon of calibration drift over a shutdown and re-start has been observed in other studies. The low OVA calibration value observed on December 9 was caused by an instrument malfunction that was immediately repaired.

5.2 QUALITY CONTROL FOR ANALYTICAL AND SAMPLING PROCEDURES

Quality control procedures were implemented to insure accurate, consistent, and unbiased analytical and sampling techniques during the project. The procedures discussed in this section include:

- blind standards
- accuracy checks

5.2.1 BLIND STANDARDS

Standard materials were prepared and submitted to the analyst without divulging the concentration of benzene or hexane present in order to evalute the quality of data generated by the Byron 301C Total Hydrocarbon Analyzer (THC) and the HP5703A Dual FID Gas Chromatograph. A 262.7 ppm hexane standard and a 1075.9 ppm benzene standard were implemented to demonstrate the precision and accuracy of the analysis of bag samples by the Byron THC and the HP Gas Chromatograph, respectively. Table 5-2 lists the data from the blind standard analyses. The difference between the prepared and measured concentration is shown as the percent difference. The percent difference is calculated as follows:

% Diff=(Prepared-Measured Concentration)X 100/Prepared Concentration.

TABLE 5-2. BLIND STANDARDS DATA LISTING

Instr.	Date	Gas Type	Prepared (ppmw)	Measured (ppmw)	Diff. (ppmw)	Percent Diff
THC	12/09/80	Hexane	262.7	247.9	14.8	5.63
HP	12/10/80	Benzene	1075.9	1042.3	33.6	3.12

In addition to the blind standard materials analysis, a sample of light oil product was analyzed by GC/MS to confirm that the amounts of benzene found by GC were only benzene and were not any coeluting compounds. Analysis of this sample and a sample of pure benzene, as depicted graphically in Figures 5-1 through 5-3, demonstrates that there were no other compounds present with the same retention time as benzene.

5.2.2 ACCURACY CHECKS

Accuracy checks were used to evaluate the overall accuracy of the sampling and analysis techniques. It basically involves inducing a known flow rate of a concentrated calibration gas into the sampling system and taking a bag sample of the diluted calibration gas at the exit of the system. Analysis of the bag sample by THC or GC provides data to calculate the measured leak rate. The induced leak rate is calculated from the flow rate and concentration of the induced standard gas.

Table 5-3 lists the data from two accuracy checks. The measured leak rate, induced leak rate, and the percent recovery are shown. The percent recovery is calculated as follows:

$$\text{Percent Recovery} = \frac{\text{Measured Leak Rate}}{\text{Induced Leak Rate}} \times 100\%$$

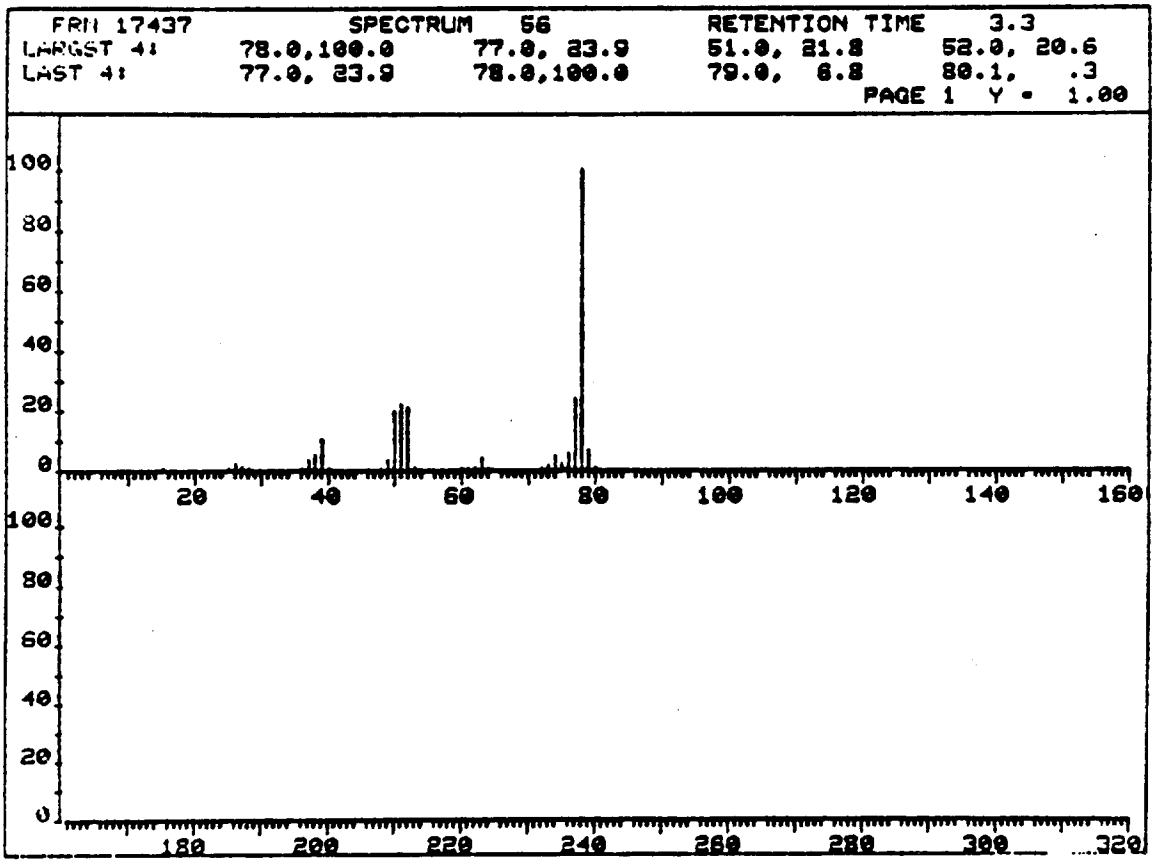

Figure 5-1. Mass Spectrum of Pure Benzene on SP-2100/Bentone Column

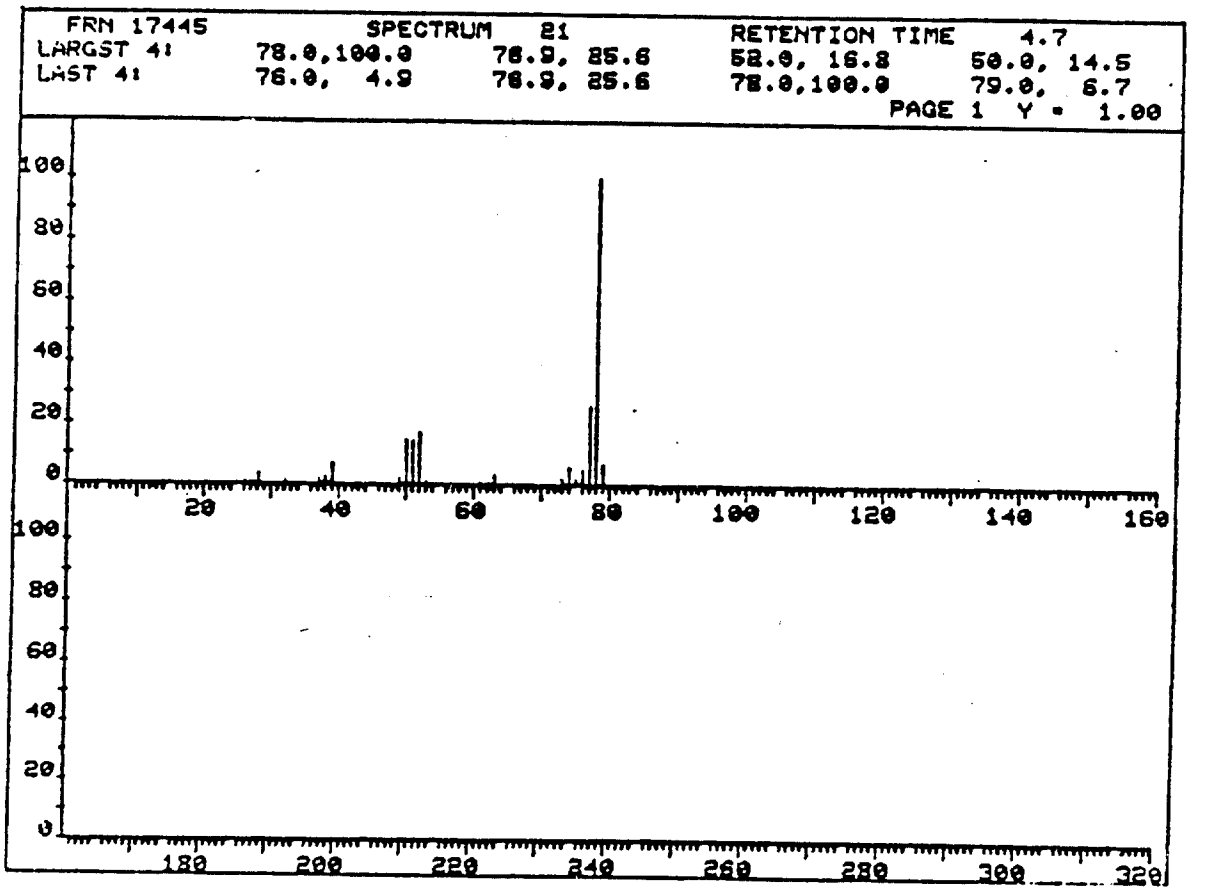

Figure 5-2. Mass Spectrum of Light Oil Product on SP-2100/Bentone

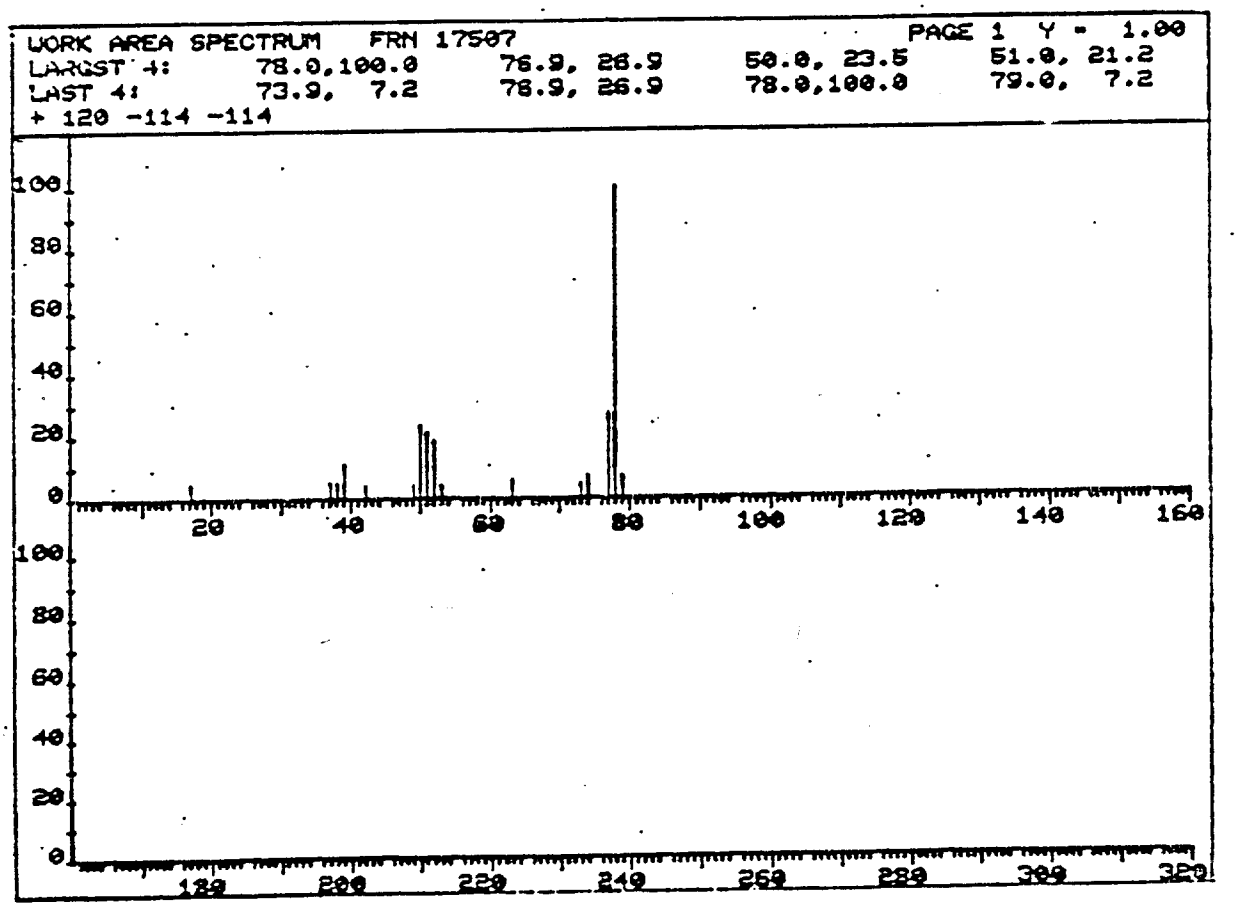

Figure 5-3. Mass Spectrum of Light Oil Product on TCEP

TABLE 5-3. ACCURACY CHECKS DATA LISTING

Date	Standard Type	Measured Leak Rate (lbs/hr)	Induced Leak Rate (lbs/hr)	Percent Recovery
12/09/80	Benzene	0.0008817	0.0007554	116.7
12/09/80	Hexane	0.0008251	0.0008232	100.2

REPUBLIC STEEL

GADSDEN PLANT

APPENDIX A

CALCULATIONS AND METHODS

A-1 Sample Emission Calculations
A-2 EPA Proposed Method 21

REPUBLIC STEEL
GADSDEN PLANT

A-1 Sample Emission Calculations

APPENDIX A-1

EMISSION CALCULATIONS

The emission rates can be calculated from the physical measurements recorded during the operation of the sampling train and with the anlyses of the hydrocarbon content of the air passing through the sampling train. The basic equation is:

$$L = \frac{k_1 \, DF(P-\Delta P)M(C_T - C_A)}{460+T} \qquad \text{(A-1)}$$

where
- L = Hydrocarbon vapor emission rate, lb/hr
- k_1 = 2.75×10^{-6} (°R-min-mole/SCF-in.Hg-hr-ppmw)
- D = Dry gas meter correction factor (dimensionless)
- F = Flow rate, cubic feet per minute
- P = Ambient atmospheric pressure, in. Hg
- ΔP = Pressure differential between ambient pressure and pressure at dry gas meter, in. Hg
- M = Average molecular weight of gas (essentially air) passing through dry gas meter, lb/lb.mole
- C_T = Total hydrocarbon concentration in air passing through the dry gas meter, ppmw
- C_A = Total hydrocarbon concentration in air near the sampled leak source, ppmw
- T = Temperature of gas (air) stream at the dry gas meter, °F.

The constant k_1 is a product of several conversion constants:

$$k_1 = \frac{(520°R) \times (60 \text{ min/hr})}{(379 \frac{SCF}{mole}) \times (29.92 \text{ in. Hg}) \times (10^6 \text{ ppmw})}$$

$$k_1 = 2.75 \times 10^{-6} (°R\text{-min-mole/SCF-in.Hg-hr-ppmw})$$

As an example calculation, assume a total hydrocarbon concentration of 19,000 ppmw was measured in the gas stream from a tent around a leaking source in an ethylene unit. The hydrocarbon would be assumed to be hexane (MW-86). The following values were recorded during the sampling:

F = 1.5 CFM

P = 29.9 in. Hg

ΔP = 2.0 in. Hg (at the dry gas meter)

C_T = 19,000 ppmw

C_A = 20 ppmw

T = 75°F

and $D = 0.95$

Then
$$M = \frac{10^6}{\frac{19{,}000}{86} + \frac{10^6 - 19{,}000}{29}} = 29.37$$

The vapor emission rate L is then calculated from Equation (A-1)

$$L = \frac{(2.75 \times 10^{-6})(0.95)(1.5)(29.9 - 2.0)(29.37)(19{,}000 - 20)}{460 + 75}$$

$$L = 0.114 \text{ lb/hr.}$$

The vapor emission rate of benzene is estimated from the hydrocarbon emission rate and the concentration data for benzene and non-methane hydrocarbons. The equation used is:

$$B = L \frac{(C_B - C_{AB})}{(C_T - C_A)} \qquad \text{(A-2)}$$

where B = Benzene vapor emission rate, lb/hr

C_B = Benzene concentration in air passing through the dry gas meter, ppmw

C_{AB} = Benzene concentration in air near the sampled leak source, ppmw.

For example, using the previous example with the data:

C_B = 15,500 ppmw

C_{AB} = 10 ppmw

the benzene vapor emission rate is calculated:

$$B = 0.114 \frac{(15,500 - 10)}{(19,000 - 20)}$$

$$B = 0.093 \text{ lb/hr.}$$

The emission rates for liquid leaks are calculated by the equation:

$$TLLR = 7.93 \frac{\rho V}{t} \qquad \text{(A-3)}$$

where TLLR = Total liquid leak rate, lb/hr

7.93 = Conversion factor from g/sec to lb/hr

V = Volume of liquid collected, cc

t = Time of collection, sec

ρ = Density of sample, g/cc.

For example, 4.0 cc of liquid from a leaking source were captured in 60 seconds, and the liquid was found to have a density of 0.75 g/cc, then:

$$TLLR = (7.93)(0.75)(4.0)/(60)$$

$$TLLR = 0.40 \text{ lb/hr.}$$

The liquid benzene leak rate is:

$$BLLR = \frac{TLLR\ [Benz.]}{100} \qquad \text{(A-4)}$$

where BLLR = Benzene liquid leak rate

[Benz]= Benzene concentration in liquid, weight percent

For example, if the liquid leak described above was found to have 79 wt percent benzene then:

$$BLLR = (0.40)(79)/(100)$$

$$BLLR = 0.31 \text{ lb/hr.}$$

REPUBLIC STEEL
GADSDEN PLANT

A-2 EPA Proposed Method 21

PROPOSED METHOD 21. DETERMINATION OF VOLATILE ORGANIC COMPOUND LEAKS

1. Applicability and Principle

1.1 Applicability. This method applies to the determination of volatile organic compound (VOC) leaks from organic process equipment. These sources include, but are not limited to, valves, flanges and other connections, pumps and compressors, pressure relief devices, process drains, open-ended valves, pump and compressor seal system degassing vents, accumulator vessel vents, and access door seals.

1.2 Principle. A portable instrument is used to detect VOC leaks from individual sources. The instrument detector is not specified, but it must meet the specifications and performance criteria contained in paragraph 2.1.

2. Apparatus

2.1 Monitoring Instrument. The monitoring instrument shall be as follows:

2.1.1 Specifications.

a. The VOC instrument detector shall respond to the organic compounds being processed. Detectors which may meet this requirement include, but are not limited to, catalytic oxidation, flame ionization, infrared absorption, and photoionization.

b. The instrument shall be intrinsically safe for operation in explosive atmospheres as defined by the applicable U.S.A. Standards (e.g., National Electrical Code by the National Fire Prevention Association).

c. The instrument shall be able to measure the leak definition concentration specified in the regulation.

d. The instrument shall be equipped with a pump so that a continuous sample is provided to the detector. The nominal sample flow rate shall be 1-3 liters per minute.

e. The scale of the instrument meter shall be readable to ±5 percent of the specified leak definition concentration.

2.1.2 Performance Criteria. The instrument must meet the following performance criteria. The definitions and evaluation procedures for each parameter are given in Section 4.

2.1.2.1 The instrument response time must be 30 seconds or less. The response time must be determined for the instrument system configuration to be used during testing, including dilution equipment. The use of a system with a shorter response time than that specified will reduce the time required for field component surveys.

2.1.2.2 Calibration Precision: The calibration precision must be less than or equal to 10 percent of the calibration gas value.

2.1.2.3 Quality Assurance. The instrument shall be subjected to response time and calibration precision tests prior to being placed in service. The calibration precision test shall be repeated every 6 months thereafter. If any modification or replacement of the

instrument detector is required, the instrument shall be retested and a new 6 month quality assurance test schedule will apply. The response time test shall be repeated if any modifications to the sample pumping system or flow configuration is made that would change the response time.

2.3 Calibration Gases. The monitoring instrument is calibrated in terms of parts per million by volume (ppmv) of the compound specified in the applicable regulation. The calibration gases required for monitoring and instrument performance evaluation are a zero gas (air, 3 ppmv VOC) and a calibration gas in air mixture approximately equal to the leak definition specified in the regulation. If cylinder calibration gas mixtures are used, they must be analyzed and certified by the manufacturer to be within ±2 percent accuracy. Calibration gases may be prepared by the user according to any accepted gaseous standards preparation procedure that will yield a mixture accurate to within ±2 percent. Alternative calibration gas species may be used in place of the calibration compound if a relative response factor for each instrument is determined so that calibrations with the alternative species may be expressed as calibration compound equivalents on the meter readout.

3. Procedures

3.1 Calibration. Assemble and start up the VOC analyzer and recorder according to the manufacturer's instructions. After the appropriate warmup period and zero or internal calibration procedure, introduce the calibration gas into the instrument sample probe. Adjust the instrument meter readout to correspond to the calibration gas value.

If a dilution apparatus is used, calibration must include the instrument and dilution apparatus assembly. The nominal dilution factor may be used to establish a scale factor for converting to an undiluted basis. For example, if a nominal 10:1 dilution apparatus is used, the meter reading for a 10,000 ppm calibration would be set at 1,000. During field surveys, the scale factor of 10 would be used to convert measurements to an undiluted basis.

3.2 Individual Source Surveys.

3.2.1 Case I - Leak Definition Based on Concentration Value. Place the probe inlet at the surface of the component interface where leakage could occur. Move the probe along the interface periphery while observing the instrument readout. If an increased meter reading is observed, slowly probe the interface where leakage is indicated until the maximum meter reading is obtained. Leave the probe inlet at this maximum reading location for approximately two times the instrument response time. If the maximum observed meter reading is greater than the leak definition in the applicable regulation, record and report the results as specified in the regulation reporting requirements. Examples of the application of this general technique to specific equipment types are:

a. Valves--The most common source of leaks from valves is at the seal between the stem and housing. Place the probe at the interface where the stem exits the packing gland and sample the stem circumference. Also, place the probe at the interface of the packing gland take-up flange seat and sample the periphery. In addition, survey

valve housings of multipart assembly at the surface of all interfaces where leaks can occur.

b. Flanges and Other Connections--For welded flanges, place the probe at the outer edge of the flange-gasket interface and sample around the circumference of the flange. Sample other types of nonpermanent joints (such as threaded connections) with a similar traverse.

c. Pumps and Compressors--Conduct a circumferential traverse at the outer surface of the pump or compressor shaft and seal interface. If the source is a rotating shaft, position the probe inlet within one centimeter of the shaft-seal interface for the survey. If the housing configuration prevents a complete traverse of the shaft periphery, sample all accessible portions. Sample all other joints on the pump or compressor housing where leakage can occur.

d. Pressure Relief Devices--The configuration of most pressure relief devices prevents sampling at the sealing seat interface. For those devices equipped with an enclosed extension, or horn, place the probe inlet at approximately the center of the exhaust area to the atmosphere for sampling.

e. Process Drains--For open drains, place the probe inlet at approximately the center of the area open to the atmosphere for sampling. For covered drains, place the probe at the surface of the cover interface and conduct a peripheral traverse.

f. Open-Ended Lines or Valves--Place the probe inlet at approximately the center of the opening to the atmosphere for sampling.

g. Seal System Degassing Vents and Accumulator Vents--Place the probe inlet at approximately the center of the opening to the atmosphere for sampling.

h. Access Door Seals--Place the probe inlet at the surface of the door seal interface and conduct a peripheral traverse.

3.2.2 Case II-Leak Definition Based on "No Detectable Emission".

a. Determine the local background concentration around the source by moving the probe inlet randomly upwind and downwind at distance of one to two meters from the source. If an interference exists with this determination due to a nearby emission or leak, the local background concentration may be determined at distances closer to the source, but in no case shall the distance be less than 25 centimeters. Note the background concentration and then move the probe inlet to the surface of the source and conduct a survey as described in 3.2.1. If a concentration increase greater than 2 percent of the concentration-based leak definition is obtained, record and report the results as specified by the regulation.

b. For those cases where the regulation requires a specific device installation, or that specified vents be ducted or piped to a control device, the existence of these conditions shall be visually confirmed. When the regulation also requires that no detectable emissions exist, visual observations and sampling surveys are required. Examples of this technique are:

i. Pump or Compressor Seals--If applicable, determine the type of shaft seal. Perform a survey of the local area ambient VOC

concentration and determine if detectable emissions exist as described in 3.2.2.a.

ii. Seal system degassing vents, accumulator vessel vents, pressure relief devices--If applicable, observe whether or not the applicable ducting or piping exists. Also, determine if any sources exist in the ducting or piping where emissions could occur prior to the control device. If the required ducting or piping exists and there are no sources of where the emissions could be vented to the atmosphere prior to the control device, then it is presumed that no detectable emissions are present.

4. Instrument Performance Evaluation Procedures

4.1 Definitions.

4.1.1 Calibration Precision. The difference between the average VOC concentration indicated by the meter readout for consecutive repetitions and the known concentration of a test gas mixture.

4.1.2 Response Time. The time interval from a step change in VOC concentration at the input of the sampling system to the time at which 90 percent of the corresponding final value is reached as displayed on the instrument readout meter.

4.2 Evaluation Procedures. At the beginning of the instrument performance evaluation test, assemble and start up the instrument according to the manufacturer's instructions for recommended warmup period and preliminary adjustments. If a dilution apparatus is used during field surveys, the evaluation procedure must be performed on the instrument-dilution system combination.

4.2.1 Calibration Precision Test. Make a total of nine measurements by alternately using zero gas and the specified calibration gas. Record the meter readings (example data sheet shwon in Figure 21-1).

4.2.2 Response Time Test Procedure. Introduce zero gas into the instrument sample probe. When the meter reading has stabilized, switch quickly to the specified calibration gas. Measure the time from concentration switching to 95 percent of final stable reading. Perform this test sequence three times and record the results (example data sheet given in Figure 21-2).

4.3 Calculations. All results are expressed as mean values, calculated by:

$$\bar{x} = \frac{1}{n} \sum_{i=1}^{n} x_i$$

Where:

x_i = Value of the measurements.

Σ = Sum of the individual values.

$\bar{x}$ = Mean value.

n = Number of data points.

REPBULIC STEEL

GADSDEN PLANT

APPENDIX B

ORIGINAL DATA SHEETS

B-1 Screening Data
B-2 Screening Sheets for Sample Data
B-3 Sample Data
B-4 Analysis Data
B-5 OVA and TLV Calibration Data
B-6 Dry Gas Meter Calibration Data
B-7 Accuracy Check Data

REPUBLIC STEEL
GADSDEN PLANT

B-1 Screening Data

TABLE B-1.1. SOURCE TYPE IDENTIFICATION CODES

Source Type	Source Type Code
Flange	1
Process Drain	2
Open-End Line	3
Agitator Seal	4
Relief Valve	5
Screwed Fitting	6
Valves	
Block valve - gate type	10
Block valve - globe type	11
Block valve - plug type	12
Block valve - ball type	13
Block valve - butterfly type	14
Block valve - other types	15
Control valve - gate type	20
Control valve - globe type	21
Control valve - plug type	22
Control valve - ball type	23
Control valve - butterfly type	24
Control valve - other types	25
On-Line Pump Seals*	
Single, mechanical, emission point at seal	30
Single, mechanical, emission point at vent	31
Single, mechanical, other emission point	32
Double, mechanical, emission point at seal	33
Double, mechanical, emission point at vent	34
Double, mechanical, other emission point	35

Continued ...

TABLE B-1.1. CONTINUED

Source Type	Source Type Code
Single, packed, emission point at seal	36
Single, packed, emission point at vent	37
Single, packed, other emission point	38
Sealless pumps	39
Off-Line Pump Seals	
Single, mechanical, emission point at seal	40
Single, mechanical, emission point at vent	41
Single, mechanical, other emission point	42
Double, mechanical, emission point at seal	43
Double, mechanical, emission point at vent	44
Double, mechanical, other emission point	45
Single, packed, emission point at seal	46
Single, packed, emission point at vent	47
Single, packed, other emission point	48
Sealless pumps	49
On-Line Compressor Seals	
Single, mechanical, emission point at seal	50
Single, mechanical, emission point at vent	51
Single, mechanical, other emission point	52
Double, mechanical, emission point at seal	53
Double, mechanical, emission point at vent	54
Double, mechanical, other emission point	55
Single, packed, emission point at seal	56
Single, packed, emission point at vent	57
Single, packed, other emission point	58
Sealless compressors	59

Continued ...

TABLE B-1.1. CONTINUED

Source Type	Source Type Code
Off-Line Compressor Seals	
Single, mechanical, emission point at seal	60
Single, mechanical, emission point at vent	61
Single, mechanical, other emission point	62
Double, mechanical, emission point at seal	63
Double, mechanical, emission point at vent	64
Double, mechanical, other emission point	65
Single, packed, emission point at seal	66
Single, packed, emission point at vent	67
Single, packed, other emission point	68
Sealless compressors	69
Exhausters	
Suction side	70
High pressure side	71

* O = outboard seal; I = inboard seal

TABLE B-1.2. STREAM IDENTIFICATION CODES

Code	Description of Stream (Columns 25-27)
1	Coke oven gas
2	BTX fraction of light oil; Unit 3 refers to this as Secondary Oil - a convention different from that used at Unit 2 where secondary oil is the non-BTX fraction of the light oil
3	Steam and vaporized light oil
4	Light oil - mostly BTX with some 2° oil
5	Light oil (BTX and 2° oil)
	Service
1	Gas
2	Light liquid
3	Heavy liquid
	Elevation
1	Sources at ground level
2	Sources at one level above ground level
3	Sources at two levels above ground level

UNIT #2

70 BADZ
20 TCEF
16 [illegible]

SCREENING DATA SHEET

Month 1	Day 3	Screening Team 5	Instrument 7	Source ID 8	Screening Value 13	Source Type 20	Process Unit 22	Service 24	Primary Material ID 25	Primary Material Conc. 28	Secondary Material ID 29	Secondary Material Conc. 32	Line Temperature °F 33	Line Pressure psig 37	Ambient Air Temperature °F 41	Elevation 44	Comments 45	
12	08	01	3	1	0	70	2	2	1						75	1	2	1
				2	250	71		1	1				140	20		1	2	2
				3	0	70		1	1				160	[redacted]				EXHAUSTER
				4	500	71		1	1				160	20				
				5	0	70		1	1				160	[redacted]			24	
				6	0	71		1	1				160	20				
				7	0	06		2	2				72	1		2	3	FLOWBACK
				8	0	06		2	2									
				9	0	06		2	2									
				10	0	10		2	2									THIS
				11	0	10		2	2									
				12	0	06			2									
				13	0	06			2									
				14	0	31			2									
				15	0	10			2									
				16	0	06			2									
				17	0	06			2									
				18	0	06			2									
				19	0	06			2									
				20	0	06			2									

COMMENTS: 1) SOURCE TYPE 70 = SUCTION SIDE OF EXHAUSTER 2) SOURCE TYPE 71 = HIGH P SIDE OF EXHAUSTER (3) SCREEN TAKE VALUES 7-20 [illegible] P = 1" Hg (4) Exhauster identified by IDS 1,6 WAS IDLING AND DID NOT HAVE COG PASS THROUGH IT

(VALVES) & ACCESS FLANGES

THIS PAGE LT. OIL REFLUX PUMPS + ASSOC. VALVES

SCREENING DATA SHEET

Month (1)	Day (3)	Screening Team (5)	Instrument (7)	Source ID (8)	Screening Value (13)	Source Type (20)	Process Unit (22)	Service (24)	Primary Material ID (25)	Primary Material Conc. (28)	Secondary Material ID (29)	Secondary Material Conc. (32)	Line Temperature °F (33)	Line Pressure psig (37)	Ambient Air Temperature °F (41)	Elevation (44)	Comments (45)
12	08	01	5	21	100001	56	2	2	2			S	71	35	70	2	4
				22	0	01											
				23	500	13											
				24	0	10											
				25	0	01											
				26	0	10											
				27	0	01											
				28	100000	46						S					5
				29	0	10											
				30	0	01											
				31	0	10											
				32	900000	22											6
				33	0	10											
				34	0	10											
				35	0	01											
				36	0	01											
				37	0	11											
				38	0	10											
				39	0	01											
				40	0	10											

COMMENTS: (4) + UP VERY (5) V SMALL LIP OK (6) + LOOK

SCREENING DATA SHEET

Month (1)	Day (3)	Screening Team (5)	Instrument (7)	Source ID (8)	Screening Value (13)	Source Type (20)	Process Unit (22)	Service (24)	Primary Material ID (25)	Primary Material Conc. (28)	Secondary Material ID (29)	Secondary Material Conc. (32)	Line Temperature °F (33)	Line Pressure psig (37)	Ambient Air Temperature °F (41)	Elevation (44)	Comments (45)
12	08	01	3	41	0	06	12	2	2				[redacted] 71	[redacted] 35	[redacted] 70	25	
		01		42	0	06											
		01		43	0	10											
		01		44	0	06											
		01		45	0	06											
		01		46	0	10											
		01		47	0	10											
		01		48	0	06											
		01		49	0	06											
		01		50	0	11											
		01		51	0	11											
		01		52	0	11											
		01		53	0	11											
		01		54	0	11											
		01		55	0	06											
		03		56	0	11											
		03		57	0	11											
		03		58	0	06											
		03		59	0	06											
		03		60	0	11											

COMMENTS:

IS OIL REFLUX CONT

SCREENING DATA SHEET

Month (1)	Day (3)	Screening Team (5)	Instrument (7)	Source ID (8)	Screening Value (13)	Source Type (20)	Process Unit (22)	Service (24)	Primary Material ID (25)	Primary Material Conc. (28)	Secondary Material ID (29)	Secondary Material Conc. (32)	Line Temperature °F (33)	Line Pressure psig (37)	Ambient Air Temperature °F (41)	Elevation (44)	Comments (45)
12	08	03	3	61	0	01	2	1	3				220	1	70	3	2
				62	0	10											
				63	0	06											
				64	0	10											
				65	0	06											
				66	0	10											
				67	0	06											
				68	0	10			2				195				2
				69	0	06											
				70	0	10											
				71	0	06											
				72	0	10											
				73	200	10											
				74	0	01											
				75	0	10			3				220				1
				76	0	10											
				77	0	10											
				78	0	01											
				79	0	11		1	2				170				3
				80	0	10		1	2				170				

COMMENTS: 1) BTU VAPOR EXCHANGER
2) [illegible] 3) VAPOR FROM STILL

SCREENING DATA SHEET

Month (1)	Day (3)	Screening Team (6)	Instrument (7)	Source ID (8)	Screening Value (13)	Source Type (20)	Process Unit (22)	Service (24)	Primary Material ID (25)	Primary Material Conc. (28)	Secondary Material ID (29)	Secondary Material Conc. (32)	Line Temperature °F (33)	Line Pressure psig (37)	Ambient Air Temperature °F (41)	Elevation (44)	Comments (45)
12	09		3	81	0	016	12	2	2				71	35	60	2	
				82	0	016											
				83	0	016											
				84	0	016											
				85	0	016											
				86	0	01											
				87	0	01											
				88	0	01											
				89	0	01											
				90	0	01											
				91	0	01											
				92	0	01											
				93	0	01											
				94	0	016											
				95	0	016											
				96	0	016											
				97	0	016		2					60	0	60	2	
				98	0	016											
				99	0	016											
				100	0	016											

COMMENTS:

PROCESS EXPLANATIONS

ENTRY CODES

SCREENING DATA SHEET

Month (1)	Day (3)	Screening Team (5)	Instrument (7)	Source ID (8)	Screening Value (13)	Source Type (20)	Process Unit (22)	Service (24)	Primary Material ID (25)	Primary Material Conc. (28)	Secondary Material ID (29)	Secondary Material Conc. (32)	Line Temperature °F (33)	Line Pressure psig (37)	Ambient Air Temperature °F (41)	Elevation (44)	Comments (45)
12	09	01	3	101	0	06	2	2	2				60	0	60	2	
				102	0	06											
				103	0	06											
				104	0	06											
				105	0	06											
				106	0	06											
				107	0	06											
				108	0	01											
				109	0	01		1	3								
				110	0	06											
				111	0	01											
				112	0	01											
				113	0	01											
				114	0	01			5								
				115	0	01			2								
				116	0	01		2	2								
				117	0	01		2	2								
				118	0	01		2	2								
12	10	01	3	119	600000	36		2	2			S	50		50	1	2
12	10	01	3	120	700000	36		2	2			S	50		50	1	2

COMMENTS: 1) BOTH PUMPS ARE LIQUID LEAKERS

STORAGE TANKS

LOAD ROOM OF PUMPS

LOAD ING PUMPS

SCREENING DATA SHEET

Month (1)	Day (3)	Screening Team (5)	Instrument (7)	Source ID (8)	Screening Value (13)	Source Type (20)	Process Unit (22)	Service (24)	Primary Material ID (25)	Primary Material Conc. (28)	Secondary Material ID (29)	Secondary Material Conc. (32)	Line Temperature °F (33)	Line Pressure psig (37)	Ambient Air Temperature °F (41)	Elevation (44)	Comments (45)
12	10	03	3	121	65000	10	2	2	2				50		50	1	
12	10			122	70000	10										1	2
12	10			123	30000	10											
12	10			124	90000	10											
12	10			125	10000	10											
12	11	03	3	126	0	10											
				127	0	10											
				128	0	10											
				129	12000	10											
				130	0	10											
				131	0	10											
				132	0	01											2
				133	0	01											
				134	0	01											
				135	0	01											
				136	0	01											
				137	0	01											
				138	0	01											
				139	0	01											
				140	0	01											

LOADING SERVICE

COMMENTS: 1) LIQUID LEAKER ; 2) Counted 25 flanges on loading service

SCREENING DATA SHEET

Month (1)	Day (3)	Screening Team (5)	Instrument (7)	Source ID (8)	Screening Value (13)	Source Type (20)	Process Unit (22)	Service (24)	Primary Material ID (25)	Primary Material Conc. (28)	Secondary Material ID (29)	Secondary Material Conc. (32)	Line Temperature °F (33)	Line Pressure psig (37)	Ambient Air Temperature °F (41)	Elevation (44)	Comments (45)
12	12	01	3	141	0	10	2	2	2				50	SUCTION IN LINE	50	12	1
				142	0	10											
				143	0	10											
				144	0	10											
				145	0	10											
				146	0	01											
				147	0	01											
				148	0	01											
				149	0	01											
				150	0	01											
				151	0	01											
				152	0	01											

COMMENTS: 1) 141-152 ARE ON SUCTION LINE FROM STORAGE TANKS TO LOADING PUMP, THESE ARE ALL UNDER A VACUUM DURING LOADING CONDITIONS; A TOTAL OF 20 FLANGES WERE COUNTED

REPUBLIC STEEL
GADSDEN PLANT

B-2 Screening Sheets for Sample Data

RADIAN
CORPORATION

SCREENING SHEET
FOR SAMPLE DATA

Card 1 [S | C] (1)

1. Radian Valve/Pump ID # [0|2|E|X|0|0|0|2] (3)

2. Unit/Process Coke BP

3. Plant Name Republic Steel

4. Date (Mo. Day Yr.) [1|2|1|2|8|0] (11)

5. Screener's ID [D|P|W] (17)

6. Before Tenting Screening Time (Military Time) [0|9|3|0] (20)

7. Before Tenting OVA Screening Value [| | |2|0|0|0] (24)
AMBIENT @ 900

TLV Screening Value [| | |1|3|0|0] (31)
Ambient @ 1000

8. Screener's ID [D|P|W] (38)

9. After Sampling Screening Time (Military Time) [1|4|3|0] (41)

10. After Sampling OVA Screening Value [| | |2|0|0|0] (45)
Ambient @ 1000

TLV Screening Value [| | |3|6|0|0] (52)
Ambient @ 2200

Comment 1 [|] (59)

Comment 2 [| | | | | | |] (61)

RADIAN
CORPORATION

SCREENING SHEET
FOR SAMPLE DATA

Card 1 [S|C] (1)

1. Radian Valve/Pump ID # [0|2|E|X|0|0|0|4] (3)

2. Unit/Process Coke BP

3. Plant Name Republic Steel

4. Date (Mo. Day Yr.) [1|2|1|2|8|0] (11)

5. Screener's ID [D|P|W] (17)

6. Before Tenting Screening Time (Military Time) [0|9|3|0] (20)

7. Before Tenting OVA Screening Value [|||5|0|0] (24)
Ambient @ 1500

TLV Screening Value [|||1|1|0|0] (31)
Ambient @ 1600

8. Screener's ID [D|P|W] (38)

9. After Sampling Screening Time (Military Time) [1|5|4|5] (41)

10. After Sampling OVA Screening Value [|||5|0|0] (45)

TLV Screening Value [|||5|0|0] (52)

Comment 1 [|] (59)

Comment 2 [|||||||] (61)

RADIAN
CORPORATION

SCREENING SHEET
FOR SAMPLE DATA

Card 1 [S | C] (1)

1. Radian Valve/Pump ID # [0 2 P U S 0 2 1] (3) 2. Unit/Process Coke BP

3. Plant Name Republic Steel

---

4. Date (Mo. Day Yr.) [1 2 | 1 0 | 8 0] (11) 5. Screener's ID [D P W] (17)

6. Before Tenting Screening Time (Military Time) [1 4 2 0] (20)

7. Before Tenting OVA Screening Value [1 5 0 0 0 0] (24) TLV Screening Value [1 8 2 0 0] (31)

---

8. Screener's ID [D P W] (38)

9. After Sampling Screening Time (Military Time) [1 5 2 0] (41)

10. After Sampling OVA Screening Value [1 0 0 0 0 1] (45) TLV Screening Value [1 8 0 0] (52)

Comment 1 [ ] (59) Comment 2 [ ] (61)

RADIAN
CORPORATION

SCREENING SHEET
FOR SAMPLE DATA

Card 1 [S | C] (1)

1. Radian Valve/Pump ID # [0 2 P U S 0 2 8] (3) 2. Unit/Process Coke BP

3. Plant Name Republic St.

---

4. Date (Mo. Day Yr.) [1 2 1 0 8 0] (11) 5. Screener's ID [D P W] (17)

6. Before Tenting Screening Time (Military Time) [1 5 1 0] (20)

7. Before Tenting OVA Screening Value [ ] (24) TLV Screening Value [ ] (31)

---

8. Screener's ID [~~D P W~~] (38)

9. After Sampling Screening Time (Military Time) [ ] (41)

10. After Sampling OVA Screening Value [ ] (45) TLV Screening Value [ ] (52)

Comment 1 [ ] (59) Comment 2 [ ] (61)

RADIAN
CORPORATION

SCREENING SHEET
FOR SAMPLE DATA

Card 1 [S | C] (1)

1. Radian Valve/Pump ID # [0 2 P U S 0 2 8] (3) 2. Unit/Process Coke BP

3. Plant Name Republic Steel

---

4. Date Mo. Day Yr. [1 2 1 1 8 0] (11) 5. Screener's ID [D P W] (17)

6. Before Tenting Screening Time (Military Time) [1 0 4 5] (20)

7. Before Tenting OVA Screening Value [1 0 0 0 0 1] (24) TLV Screening Value [1 0 0 0 0 1] (31)

---

8. Screener's ID [D P W] (38)

9. After Sampling Screening Time (Military Time) [1 5 3 5] (41)

10. After Sampling OVA Screening Value [ ] (45) TLV Screening Value [1 5 0 0 0 1] (52)

Comment 1 [ ] (59) Comment 2 [ ] (61)

RADIAN
CORPORATION

SCREENING SHEET
FOR SAMPLE DATA

Card 1 [S | C] (1)

1. Radian Valve/Pump ID # [0 2 P U S 1 1 1 9] (3) 2. Unit/Process Coke BP

3. Plant Name Republic Steel

---

4. Date Mo. Day Yr. [1 2 1 0 8 0] (11) 5. Screener's ID [D P W] (17)

6. Before Tenting Screening Time (Military Time) [1 1 0 5] (20)

7. Before Tenting OVA Screening Value [1 6 0 0 0 0] (24) TLV Screening Value [1 1 8 0 0 0] (31)

---

8. Screener's ID [D P W] (38)

9. After Sampling Screening Time (Military Time) [1 1 4 5] (41)

10. After Sampling OVA Screening Value [1 7 5 0 0 0] (45) TLV Screening Value [1 1 9 4 0 0] (52)

Comment 1 [ ] (59) Comment 2 [ ] (61)

RADIAN
CORPORATION

SCREENING SHEET
FOR SAMPLE DATA

Card 1 [S | C] (1)

1. Radian Valve/Pump ID # [0 2 P U S 1 2 0] (3) 2. Unit/Process Coke B.P.

3. Plant Name Republic Steel, Gadsden

---

4. Date Mo. Day Yr. [1 2 | 1 0 | 8 0] (11) 5. Screener's ID [D P W] (17)

6. Before Tenting Screening Time (Military Time) [1 1 1 0] (20)

7. Before Tenting OVA Screening Value [1 7 0 0 0 0] (24) TLV Screening Value [1 1 0 0 0 1] (31)

---

8. Screener's ID [ ] (38)

9. After Sampling Screening Time (Military Time) [ ] (41)

10. After Sampling OVA Screening Value [ ] (45) TLV Screening Value [ ] (52)

Comment 1 [ ] (59) Comment 2 [ ] (61)

RADIAN
CORPORATION

SCREENING SHEET
FOR SAMPLE DATA

Card 1 [S | C]

1. Radian Valve/Pump ID # [0 2 P U S 1 1 2 0] (3)

2. Unit/Process Coke BP

3. Plant Name Republic Steel

4. Date (Mo. Day Yr.) [1 2 1 1 8 0] (11)

5. Screener's ID [D A W] (17)

6. Before Tenting Screening Time (Military Time) [B 5 0] (20)

7. Before Tenting OVA Screening Value [1 2 4 0 0 0] (24)

TLV Screening Value [1 1 0 0 0 1] (31)

8. Screener's ID [D A W] (38)

9. After Sampling Screening Time (Military Time) [A 5 0] (41)

10. After Sampling OVA Screening Value [1 9 0 0 0 0] (45)

TLV Screening Value [1 1 6 8 0 0] (52)

Comment 1 [ ] (59)

Comment 2 [ ] (61)

RADIAN
CORPORATION

SCREENING SHEET
FOR SAMPLE DATA

Card 1 [S|C] (1)

1. Radian Valve/Pump ID # [0|2|V|A|0|0|2|3] (3)

2. Unit/Process Coke RF

3. Plant Name Republic Steel

4. Date (Mo. Day Yr.) [1|2|1|0|8|0] (11)

5. Screener's ID [D|P|W] (17)

6. Before Tenting Screening Time (Military Time) [1|5|0|0] (20)

7. Before Tenting OVA Screening Value [0] (24) ← Not Bagged

TLV Screening Value [ ] (31)

8. Screener's ID [ ] (38)

9. After Sampling Screening Time (Military Time) [ ] (41)

10. After Sampling OVA Screening Value [ ] (45)

TLV Screening Value [ ] (52)

Comment 1 [ ] (59)

Comment 2 [ ] (61)

UNIT #2

RADIAN
CORPORATION

SCREENING SHEET
FOR SAMPLE DATA

Card 1 [S | C] (1)

1. Radian Valve/Pump ID # [0 2 U A 0 0 3 2] (3)

2. Unit/Process Coke BP

3. Plant Name Republic

---

4. Date (Mo. Day Yr.) [1 2 | 6 0 | 8 0] (11)

5. Screener's ID [D P W] (17)

6. Before Tenting Screening Time (Military Time) [1 0 2 0] (20)

7. Before Tenting OVA Screening Value [1 7 0 0 0 0] (24)

TLV Screening Value [1 1 8 7 0 0] (31)

---

8. Screener's ID [D P W] (38)

9. After Sampling Screening Time (Military Time) [1 4 4 0] (41)

10. After Sampling OVA Screening Value [1 8 0 0 0 0] (45)

TLV Screening Value [1 1 0 0 0 1] (52)

Comment 1 [ ] (59)

Comment 2 [ ] (61)

RADIAN
CORPORATION

SCREENING SHEET
FOR SAMPLE DATA

Card 1 [S | C] (1)

1. Radian Valve/Pump ID # [0|2|V|A|0|0|7|3] (3)

2. Unit/Process Coke BP

3. Plant Name Republic Steel

---

4. Date (Mo. Day Yr.) [1|2|1|2|8|0] (11)

5. Screener's ID [D|P|W] (17)

6. Before Tenting Screening Time (Military Time) [1|5|2|0] (20)

7. Before Tenting OVA Screening Value [|||2|2|0|0] (24)

TLV Screening Value [|||5|0|0] (31)

Ambient sometimes rises to equal leak, but is not nearly as persistent

---

8. Screener's ID [D|P|W] (38)

9. After Sampling Screening Time (Military Time) [1|7|3|0] (41)

10. After Sampling OVA Screening Value [|||3|0|0] (45)

TLV Screening Value [|||9|0|0] (52)

Comment 1 [ ] (59)

Comment 2 [ ] (61)

RADIAN
CORPORATION

SCREENING SHEET
FOR SAMPLE DATA

Card 1 [S | C] (1)

1. Radian Valve/Pump ID # [0 2 V A 0 1 2 1] (3)

2. Unit/Process Coke B.P.

3. Plant Name Republic Steel

---

4. Date (Mo. Day Yr.) [1 2 1 0 8 0] (11)

5. Screener's ID [D P W] (17)

6. Before Tenting Screening Time (Military Time) [1 1 1 5] (20)

7. Before Tenting OVA Screening Value [1 6 5 0 0 0] (24)

TLV Screening Value [1 1 9 0 0 0] (31)

---

8. Screener's ID [ ] (38)

9. After Sampling Screening Time (Military Time) [ ] (41)

10. After Sampling OVA Screening Value [ ] (45)

TLV Screening Value [ ] (52)

Comment 1 [ ] (59)

Comment 2 [ ] (61)

RADIAN
CORPORATION

SCREENING SHEET
FOR SAMPLE DATA

Card 1 [S | C] (1)

1. Radian Valve/Pump ID # [0 2 V A 0 1 2 1] (3) 2. Unit/Process Coke BP

3. Plant Name Republic Steel

---

4. Date (Mo. Day Yr.) [1 2 1 1 8 0] (11) 5. Screener's ID [DAW] (17)

6. Before Tenting Screening Time (Military Time) [1 3 4 5] (20)

7. Before Tenting OVA Screening Value [1 1 0 0 0 0] (24) TLV Screening Value [1 4 2 0 0] (31)

---

8. Screener's ID [DAW] (38)

9. After Sampling Screening Time (Military Time) [1 4 3 5] (41)

10. After Sampling OVA Screening Value [1 1 0 0 0 0] (45) TLV Screening Value [1 9 8 0] (52)

Comment 1 [ ] (59) Comment 2 [ ] (61)

RADIAN
CORPORATION

SCREENING SHEET
FOR SAMPLE DATA

Card 1 [S | C]
1

1. Radian Valve/Pump ID # [2RVA0122]
3

2. Unit/Process Coke BP

3. Plant Name Republic Steel

---

4. Date Mo. Day Yr. [12 | 11 | 80]
11

5. Screener's ID [DPW]
17

6. Before Tenting Screening Time (Military Time) [1930]
20

7. Before Tenting OVA Screening Value [1000001]
24

TLV Screening Value [1100001]
31

---

8. Screener's ID [DPW]
38

9. After Sampling Screening Time (Military Time) [1415]
41

10. After Sampling OVA Screening Value [1150000]
45

TLV Screening Value [1750000]
52

Comment 1 [ ]
59

Comment 2 [ ]
61

RADIAN
CORPORATION

SCREENING SHEET
FOR SAMPLE DATA

Card 1 [S | C] (1)

1. Radian Valve/Pump ID # [0 2 V A 0 1 2 3] (3)

2. Unit/Process Coke B.P.

3. Plant Name Republic Steel.

---

4. Date Mo. Day Yr. [1 2 1 1 8 0] (11)

5. Screener's ID [D P W] (17)

6. Before Tenting Screening Time (Military Time) [1 9 2 0] (20)

7. Before Tenting OVA Screening Value [1 1 3 6 0 0] (24)

TLV Screening Value [0] (31)

---

8. Screener's ID [D P W] (38)

9. After Sampling Screening Time (Military Time) [1 0 3 0] (41)

10. After Sampling OVA Screening Value [0] (45)

TLV Screening Value [8 0] (52)

Comment 1 [ ] (59)

Comment 2 [ ] (61)

RADIAN
CORPORATION

SCREENING SHEET
FOR SAMPLE DATA

Card 1 [S | C] (1)

1. Radian Valve/Pump ID # [0 2 V A 0 1 1 2 4] (3)

2. Unit/Process Coke BP

3. Plant Name Republic Steel

---

4. Date (Mo. Day Yr.) [1 2 | 1 1 | 8 0] (11)

5. Screener's ID [D P W] (17)

6. Before Tenting Screening Time (Military Time) [0 9 0 0] (20)

7. Before Tenting OVA Screening Value [1 1 0 0 0 0 1] (24)

TLV Screening Value [1 1 0 0 0 1] (31)

---

8. Screener's ID [D P W] (38)

9. After Sampling Screening Time (Military Time) [1 0 1 5] (41)

10. After Sampling OVA Screening Value [1 3 0 0 0 0] (45)

TLV Screening Value [1 2 6 0 0] (52)

Comment 1 [ ] (59)

Comment 2 [ ] (61)

RADIAN
CORPORATION

SCREENING SHEET
FOR SAMPLE DATA

Card 1 [S | C] (1)

1. Radian Valve/Pump ID # [0 2 V A 0 1 1 2 5] (3) 2. Unit/Process Coke BP

3. Plant Name Republic Steel

---

4. Date Mo. Day Yr. [1 2 1 ~~0~~ 1 8 0] (11) 5. Screener's ID [D P W] (17)

6. Before Tenting Screening Time (Military Time) [1 4 0 0] (20)

7. Before Tenting OVA Screening Value [1 0 0 0 0 0] (24) TLV Screening Value [1 6 0 0] (31)

---

8. Screener's ID [D P W] (38)

9. After Sampling Screening Time (Military Time) [1 4 4 0] (41)

10. After Sampling OVA Screening Value [1 1 0 0 0 0] (45) TLV Screening Value [1 1 0 0 0] (52)

Comment 1 [ ] (59) Comment 2 [ ] (61)

RADIAN
CORPORATION

SCREENING SHEET
FOR SAMPLE DATA

Card 1 [S | C] (1)

1. Radian Valve/Pump ID # [0 2 V A 0 1 2 9] (3)

2. Unit/Process Coke BP

3. Plant Name Republic Steel

---

4. Date (Mo. Day Yr.) [1 2 1 0 8 0] (11)

5. Screener's ID [D P W] (17)

6. Before Tenting Screening Time (Military Time) [1 3 3 5] (20)

7. Before Tenting OVA Screening Value [1 1 0 0 0 0] (24)

TLV Screening Value [1 1 8 0 0] (31)

---

8. Screener's ID [D P W] (38)

9. After Sampling Screening Time (Military Time) [1 4 3 0] (41)

10. After Sampling OVA Screening Value [1 7 0 0 0 0] (45)

TLV Screening Value [1 1 7 8 0 0] (52)

Comment 1 [ ] (59)

Comment 2 [ ] (61)

REPUBLIC STEEL
GADSDEN PLANT

B-3 Sample Data

RADIAN CORPORATION

REPLACEMENT CODING SHEET

Card 1 [1 | S] (1)

SAMPLE DATA SHEET

1. Radian Valve/Pump ID# [0|2|E|X|0|0|0|2] (3) 2. Unit/Process COKE

3. Plant Name REPUBLIC

4. Date (Mo. Day Yr.) [1|2 | 1|2 | 8|0] (11) 5. Sampler's Initials [D|W|] (17)

6. Time [1|4|0|0] (20) (Military Time) 7. Cart ID# [1] (24) 8. N.B.# ____ 9. Page # ____

10. Meter #1 [5|7|2|.|6] (25) 12. Meter #2 [5|8|2|.|0|5] (31)

11. Time #1 [|1|0] (37) 13. Time #2 [|1|4] (41)

14. Temp #1 °F [7|0] (45) 15. Temp #2 °F [7|0] (48)

16. Bar. Press., in. Hg. [3|0|.|2|1] (51) 17. ΔP, in. Hg. [3|.|3|5] (56)

18. DGM Correction Factor [1|.|0|9|8] (61) 19. Meter # 715572

20. Vol. Org. Condensate ml [|1|1|1] (66)

21. Coll. time, minutes [|1|5] (71) 22. Specific Gravity of Organic Condensate [|1] (75)

23. Comment [|R] (78)

POS. PRESS ON TENT!

REPLACEMENT CODING SHEET

RADIAN CORPORATION

SAMPLE DATA SHEET

Card 1 [1 | S] (1)

1. Radian Valve/Pump ID# [0 2 E X 0 0 0 2] (3) 2. Unit/Process COKE

3. Plant Name REPUBLIC ~~A~~ B

4. Date (Mo. Day Yr.) [1 2 | 1 3 | 8 0] (11) 5. Sampler's Initials [D W] (17)

6. Time [1 4 0 0] (20) (Military Time) 7. Cart ID# [2] (24) 8. N.B.# ____ 9. Page # ____

10. Meter #1 [9 3 5 1 . 9 1 1] (25) 12. Meter #2 [9 4 5 1 . 5 1 2] (31)

11. Time #1 [1 1 0] (37) 13. Time #2 [1 1 4] (41)

14. Temp #1 °F [1 7 0] (45) 15. Temp #2 °F [1 7 0] (48)

16. Bar. Press., in. Hg. [3 0 . 2 1 1] (51) 17. ΔP, in. Hg. [1 2 . 1 1] (56)

18. DGM Correction Factor ~~1.0152~~ 1.052 (61) 19. Meter # 713851

20. Vol. Org. Condensate ml [1 1 1 1] (66)

21. Coll. time, minutes [1 1 1 5] (71) 22. Specific Gravity of Organic Condensate [1 1] (75)

23. Comment [1 R] (78)

FOS. PRESS ON TEST!

RADIAN CORPORATION

REPLACEMENT CODING SHEET

Card 1 [1 | S] (1)

SAMPLE DATA SHEET

1. Radian Valve/Pump ID# [0 2 E X 0 0 0 4] (3) 2. Unit/Process COKE

3. Plant Name REPUBLIC A

4. Date (Mo. Day Yr.) [1 2 | 1 2 | 8 0] (11) 5. Sampler's Initials [D W] (17)

6. Time [ ] (20) (Military Time) 7. Cart ID# [1] (24) 8. N.B.# ____ 9. Page # ____

10. Meter #1 [6 4 9] (25) 12. Meter #2 [6 6 2 . 5 1 4] (31)

11. Time #1 [0] (37) 13. Time #2 [5] (41)

14. Temp #1 °F [7 0] (45) 15. Temp #2 °F [7 0] (48)

16. Bar. Press., in. Hg. [3 0 . 2 1] (51) 17. ΔP, in. Hg. [4] (56)

18. DGM Correction Factor ~~1.052~~ ~~1.0998~~ 1.098 (61) 19. Meter # 715572

20. Vol. Org. Condensate ml [ ] (66)

21. Coll. time, minutes [1 5] (71) 22. Specific Gravity of Organic Condensate [ ] (75)

23. Comment [R] (78)

0.7" H_2O POSITIVE PRESS. ON TRENT!

REPLACEMENT SHEET

RADIAN CORPORATION

SAMPLE DATA SHEET

Card 1 [1 | S] (1)

1. Radian Valve/Pump ID# [0 2 E X 0 0 0 4] (3) 2. Unit/Process COKE

3. Plant Name REPUBLIC ~~A~~ B

4. Date (Mo. Day Yr.) [1 2 | 1 3 | 8 0] (11) 5. Sampler's Initials [D W] (17)

6. Time [ ] (20) (Military Time) 7. Cart ID# [2] (24) 8. N.B.# ____ 9. Page # ____

10. Meter #1 [2 7 1 . 4 1 2] (25) 12. Meter #2 [4 6 1 . 1 1 0] (31)

11. Time #1 [1 0] (37) 13. Time #2 [1 5] (41)

14. Temp #1 °F [7 0] (45) 15. Temp #2 °F [7 0] (48)

16. Bar. Press., in. Hg. [3 0 1 . 2 1 1] (51) 17. ΔP, in. Hg. [3 . 4] (56)

18. DGM Correction Factor ~~1.098~~ [1.0 5 2] (61) 7.052 19. Meter # 713851

20. Vol. Org. Condensate ml [ ] (66)

21. Coll. time, minutes [1 5] (71) 22. Specific Gravity of Organic Condensate [ ] (75)

23. Comment [R] (78)

0.7" H_2O POSITIVE PRESS. ON TENT!

RADIAN
CORPORATION

Card 1 [1 | S] (1)

SAMPLE DATA SHEET

1. Radian Valve/Pump ID# [0 2 P U 0 2 1] (3) 2. Unit/Process COKE

3. Plant Name REPUBLIC

---

4. Date (Mo. Day Yr.) [1 2 | 1 0 | 8 0] (11) 5. Sampler's Initials [P W] (17)

6. Time (Military Time) [ ] (20) 7. Cart ID# [ ] (24) 8. N.B.# ____ 9. Page # ____

10. Meter #1 [9 0 5 . 1 7 0] (25) 12. Meter #2 [9 1 0 1 . 1 4 5] (31)

11. Time #1 [0] (37) 13. Time #2 [3] (41)

14. Temp #1 °F [4 4] (45) 15. Temp #2 °F [4 3] (48)

16. Bar. Press., in. Hg. [3 0 1 . 2 0] (51) 17. ΔP, in. Hg. [1 . 2 5] (56)

18. DGM Correction Factor [1 . 0 9 8] (61) 19. Meter # 7557Z

20. Vol. Org. Condensate ml [0] (66)

21. Coll. time, minutes [7] (71) 22. Specific Gravity of Organic Condensate [ ] (75)

23. Comment [ ] (78)

LIQ LEAK:
1.3 ml IN 20.5 SEC.

~~LIQ LEAK STOPPED AFTER SAMPLING~~
~~SOLID FLOW TIME TO CUMB TO STOPPY~~
~~STARTS SECONDS TIMING~~

RADIAN
CORPORATION

Card 1 [1 | S]
1

SAMPLE DATA SHEET

1. Radian Valve/Pump ID# [0 2 P U 9 0 2 8] (3) 2. Unit/Process COKE

3. Plant Name REPUBLIC

---

4. Date (Mo. Day Yr.) [1 2 1 1 8 0] (11) 5. Sampler's Initials [P W] (17)

6. Time (Military Time) [ ] (20) 7. Cart ID# [7] (24) 8. N.B.# ____ 9. Page # ____

10. Meter #1 [4 3 1 5 1 . 1 4 0] (25) 12. Meter #2 [4 4 1 1 . 1 0 1 7] (31)

11. Time #1 [1 1 0] (37) 13. Time #2 [1 1 5] (41) 442.74 4

14. Temp #1 °F [4 6] (45) 15. Temp #2 °F [4 6] (48)

16. Bar. Press., in. Hg. [3 0 . 1 2 1] (51) 17. ΔP, in. Hg. [1 2 . 5] (56)

18. DGM Correction Factor [1 . 0 9 8] (61) 19. Meter # 715572

20. Vol. Org. Condensate ml [1 0] (66)

21. Coll. time, minutes [1 8] (71) 22. Specific Gravity of Organic Condensate [ ] (75)

23. Comment [ ] (78)

LIQ LEAK 1 ml IN 9.5 sec

UNIT #2

RADIAN
CORPORATION

Card 1 [1 | S]
1

SAMPLE DATA SHEET

1. Radian Valve/Pump ID# [0 2 P 4 S 1 1 9] 2. Unit/Process COKE
3

3. Plant Name REPUBLIC

4. Date (Mo. Day Yr.) [1 2 1 0 8 0]
11

5. Sampler's Initials [D W]
17

6. Time (Military Time) [1 1 4 0]
20

7. Cart ID# [i]
24

8. N.B.# ____ 9. Page # ____

10. Meter #1 [8 1 3 . 0 0]
25

12. Meter #2 [8 1 7 . 0 6]
31

819.74
5

11. Time #1 [1 1 0]
37

13. Time #2 [1 1 3]
41

14. Temp #1 °F [4 3]
45

15. Temp #2 °F [1 4 3]
48

16. Bar. Press., in. Hg. [3 0 . 2 0]
51

17. ΔP, in. Hg. [1 1 . 2]
56

18. DGM Correction Factor [1 . 0 9 8]
61

19. Meter # 715572

20. Vol. Org. Condensate ml [1 1 1 0]
66

21. Coll. time, minutes [1 1 6]
71

22. Specific Gravity of Organic Condensate [1 1]
75

23. Comment [1 1]
78

WHILE ON: LIQ LEAK: FINE SPRAY - OMNIDIRECTIONAL

IMMEDIATELY AFTER SHUTOFF: 1.2 ml IN 5.2 sec

PU 119
VA 124
PU 120
VA 123
VA 122
VA 129
VA 121
VA 126

} IN LIGHT OIL (BTX) LOADING SYSTEM — IN USE (PUMPS RUNNING) ~2 HRS/DAY

RADIAN
CORPORATION

Card 1 [1 | S] (1)

SAMPLE DATA SHEET

1. Radian Valve/Pump ID# [0 2 P U S 1 2 0] (3) 2. Unit/Process COKE

3. Plant Name REPUBLIC

---

4. Date Mo. Day Yr. [1 2 1 1 8 0] (11) 5. Sampler's Initials [DW] (17)

6. Time [ ] (20) (Military Time) 7. Cart ID# [1] (24) 8. N.B.# ____ 9. Page # ____

10. Meter #1 [7 7 6 1 . 5 0] (25) 12. Meter #2 [7 8 0 1 . 1 7] (31)

11. Time #1 [0] (37) 13. Time #2 [3] (41)

14. Temp #1 °F [35] (45) 15. Temp #2 °F [36] (48)

16. Bar. Press., in. Hg. [3 0 . 1 8] (51) 17. ΔP, in. Hg. [1 . 2] (56)

18. DGM Correction Factor [1 . 0 9 8] (61) 19. Meter # 715572

20. Vol. Org. Condensate ml [0] (66)

21. Coll. time, minutes [9] (71) 22. Specific Gravity of Organic Condensate [ ] (75)

23. Comment [ ] (78)

LIQ LEAK

1.2 ml IN 2.5 sec

* SEE PM 119

RADIAN
CORPORATION

Card 1 [1 | S] (1)

SAMPLE DATA SHEET

1. Radian Valve/Pump ID# 02VA0032 (3)
2. Unit/Process COKE
3. Plant Name REPUBLIC

---

4. Date (Mo. Day Yr.) 12/10/80 (11)
5. Sampler's Initials DW (17)
6. Time (Military Time) (20)
7. Cart ID# 1 (24)
8. N.B.# ____
9. Page # ____
10. Meter #1 858.20 (25)
11. Time #1 0 (37)
12. Meter #2 863.75 (31)
13. Time #2 4 (41)
14. Temp #1 °F 143 (45)
15. Temp #2 °F 142 (48)
16. Bar. Press., in. Hg. 30.20 (51)
17. ΔP, in. Hg. 1.35 (56)
18. DGM Correction Factor 1.0978 (61)
19. Meter # 715572
20. Vol. Org. Condensate ml 0 (66)
21. Coll. time, minutes 9 (71)
22. Specific Gravity of Organic Condensate (75)
23. Comment (78)

LIQ LEAK STOPPED AFTER SAMPLING
⇒ WILL ALLOW TIME FOR STEADY ST
EQUIL. BEFORE TIMING LEAK.
— LIQ LEAK NEVER REOCCURRED
AFTER SAMPLING

RADIAN
CORPORATION

Card 1 [1 | S]
1

SAMPLE DATA SHEET

1. Radian Valve/Pump ID# [D2VA0073] 3
2. Unit/Process COKE

3. Plant Name REPUBLIC

---

4. Date (Mo. Day Yr.) [12/12/80] 11
5. Sampler's Initials [DW] 17

6. Time (Military Time) [ ] 20
7. Cart ID# [1] 24
8. N.B.# ____
9. Page # ____

10. Meter #1 [6817.140] 25
12. Meter #2 [6911.154] 31

11. Time #1 [0] 37
13. Time #2 [3] 41

14. Temp #1 °F [70] 45
15. Temp #2 °F [70] 48

16. Bar. Press., in. Hg. [30.121] 51
17. ΔP, in. Hg. [1.18] 56

18. DGM Correction Factor [1.0998] 61
19. Meter # 715572

20. Vol. Org. Condensate ml [10] 66

21. Coll. time, minutes [9] 71
22. Specific Gravity of Organic Condensate [ ] 75

23. Comment [ ] 78

RADIAN
CORPORATION

Card 1 [1 | S] (1)

SAMPLE DATA SHEET

1. Radian Valve/Pump ID# [02VA01121] (3) 2. Unit/Process COKL

3. Plant Name _____

4. Date (Mo. Day Yr.) [12 11 80] (11) 5. Sampler's Initials [DW] (17)

6. Time (Military Time) [ ] (20) 7. Cart ID# [1] (24) 8. N.B.# ____ 9. Page # ____

10. Meter #1 [2771.180] (25) 12. Meter #2 [2853.131] (31)

11. Time #1 [10] (37) 13. Time #2 [13] (41)

14. Temp #1 °F [147] (45) 15. Temp #2 °F [147] (48)

16. Bar. Press., in. Hg. [30.118] (51) 17. ΔP, in. Hg. [12.5] (56)

18. DGM Correction Factor [1.998] (61) 19. Meter # 715572

20. Vol. Org. Condensate ml [10] (66)

21. Coll. time, minutes [14] (71) 22. Specific Gravity of Organic Condensate [ ] (75)

23. Comment [ ] (78)

★ SEE PM 119

RADIAN
CORPORATION

Card 1 [1 | S] (1)

SAMPLE DATA SHEET

1. Radian Valve/Pump ID# 0211A0112 (3) 2. Unit/Process COKE

3. Plant Name REPUBLIC

---

4. Date (Mo. Day Yr.) 12 / 1 / 80 (11) 5. Sampler's Initials RW (17)

6. Time (Military Time) (20) 7. Cart ID# 1 (24) 8. N.B.# ____ 9. Page # ____

10. Meter #1 224.150 (25) 12. Meter #2 219.149 (31)

11. Time #1 10 (37) 13. Time #2 13 (41)

14. Temp #1 °F 145 (45) 15. Temp #2 °F 145 (48)

16. Bar. Press., in. Hg. 30.118 (51) 17. ΔP, in. Hg. 1.10 (56)

18. DGM Correction Factor 1.0918 (61) 19. Meter # 74572

20. Vol. Org. Condensate ml 0 (66)

21. Coll. time, minutes 15 (71) 22. Specific Gravity of Organic Condensate (75)

23. Comment (78)

LIQ LEAK 1.7 ml IN 3 min 32 sec

* SEE PG 119

RADIAN
CORPORATION

Card 1 [1 | S] (1)

SAMPLE DATA SHEET

1. Radian Valve/Pump ID# 0 2 VA 0 1 A 2 3 (3) 2. Unit/Process COKE

3. Plant Name REPUBLIC

---

4. Date (Mo. Day Yr.) 1 2 1 1 8 0 (11) 5. Sampler's Initials DW (17)

6. Time (Military Time) (20) 7. Cart ID# 1 (24) 8. N.B.# ____ 9. Page # ____

10. Meter #1 1 2 9 . 0 9 0 (25) 12. Meter #2 1 3 8 . 3 9 (31)

11. Time #1 0 (37) 13. Time #2 6 (41)

14. Temp #1 °F 3 6 (45) 15. Temp #2 °F 3 7 (48)

16. Bar. Press., in. Hg. 3 0 . 1 1 8 (51) 17. ΔP, in. Hg. 1 . 6 5 (56)

18. DGM Correction Factor 1 . 0 9 8 (61) 19. Meter # 715572

20. Vol. Org. Condensate ml 0 (66)

21. Coll. time, minutes 9 (71) 22. Specific Gravity of Organic Condensate (75)

23. Comment (78)

★ SEE PG 119

RADIAN
CORPORATION

Card 1 [1 | S]
1

SAMPLE DATA SHEET

1. Radian Valve/Pump ID# [012VA01124] 3
2. Unit/Process [COKE]

3. Plant Name [REPUBLIC]

---

4. Date (Mo. Day Yr.) [12 11 80] 11
5. Sampler's Initials [PW] 17

6. Time (Military Time) [ ] 20
7. Cart ID# [1] 24
8. N.B.# ____
9. Page # ____

10. Meter #1 [005.170] 25
12. Meter #2 [131.713] 31

11. Time #1 [10] 37
13. Time #2 [15] 41

14. Temp #1 °F [136] 45
15. Temp #2 °F [135] 48

16. Bar. Press., in. Hg. [30.118] 51
17. ΔP, in. Hg. [1.18] 56

18. DGM Correction Factor [1.0198] 61
19. Meter # [715572]

20. Vol. Org. Condensate ml [10] 66

21. Coll. time, minutes [18] 71
22. Specific Gravity of Organic Condensate [ ] 75

23. Comment [ ] 78

★ SEE PW 119

RADIAN
CORPORATION

Card 1 [1 | S] (1)

SAMPLE DATA SHEET

1. Radian Valve/Pump ID# 012VA01/25 (3)
2. Unit/Process COKE
3. Plant Name REPUBLIC

---

4. Date (Mo. Day Yr.) 12 11 80 (11)
5. Sampler's Initials RW (17)
6. Time (Military Time) (20)
7. Cart ID# 1 (24)
8. N.B.# ____
9. Page # ____
10. Meter #1* 2951.190 (25)
11. Time #1 10 (37)
12. Meter #2 3021.217 (31)
13. Time #2 14 (41)
14. Temp #1 °F 47 (45)
15. Temp #2 °F 47 (48)
16. Bar. Press., in. Hg. 30.118 (51)
17. ΔP, in. Hg. 21.25 (56)
18. DGM Correction Factor 1.0918 (61)
19. Meter # 715572
20. Vol. Org. Condensate ml 0 (66)
21. Coll. time, minutes 16 (71)
22. Specific Gravity of Organic Condensate (75)
23. Comment (78)

* SEE PM 119

RADIAN
CORPORATION

Card 1 [1 | S] (1)

SAMPLE DATA SHEET

1. Radian Valve/Pump ID# 0 2 4 V 4 0 1 1 2 9 (3) 2. Unit/Process COKE

3. Plant Name REPUBLIC

---

4. Date (11) Mo. 1 2 Day 1 1 Yr. 8 0 5. Sampler's Initials DW (17)

6. Time (20) (Military Time) 7. Cart ID# 1 (24) 8. N.B.# ____ 9. Page # ____

10. Meter #1 (25) 2 5 8 1 . 1 5 0 12. Meter #2 (31) 2 6 4 1 . 2 1 0

11. Time #1 (37) 1 1 0 13. Time #2 (41) 1 1 3

14. Temp #1 °F (45) 1 4 6 15. Temp #2 °F (48) 4 7

16. Bar. Press., in. Hg. (51) 3 0 1 . 1 8 17. ΔP, in. Hg. (56) 1 2 . 1 4

18. DGM Correction Factor (61) 1 . 0 1 9 8 19. Meter # 715572

20. Vol. Org. Condensate ml (66) 1 1 1 1 0

21. Coll. time, minutes (71) 1 1 1 5 22. Specific Gravity of Organic Condensate (75)

23. Comment (78)

★ SEE PU 119

REPUBLIC STEEL
GADSDEN PLANT

B-4 Analysis Data

TABLE B-4.1 COMPONENT CODES FOR ANALYSIS DATA SHEETS

Code	Component
001	Methane
012	Benzene
888	OVA reading for sample bag
997	Hexane
998	Non-methane HC
999,777	OVA reading for ambient air bag

ANALYSIS DATA SHEET

(AMBIENT AND BAG)

1 | A
1

1. Radian Valve/Pump ID# 0 2 ~~V A~~ EX 0 0 0 2 (3) 2. Unit/Process Coke Plant

3. Plant Name Republic Steel

4. Date (Mo. Day Yr.) 1 2 1 2 8 0 (11) 5. Analyst's Initials C J 6 (17)

6. Time (Military) 1 5 0 0 (20) 7. N.B. #_____ 8. Page #_____

9. Instrument HP 5730 GC Z (24)

AMBIENT AIR

	Component Code	ppmw	
1.	0 1 2 (25)	1 9 1 . 7 3 (28)	22.62 16.84
2.	(43)	(46)	
3.	(61)	(64)	

BAG SAMPLE

	Component Code	ppmw A	
		B	
1.	0 1 2 (34)	1 6 9 1 . 3 (37)	179.9 158.7
2.	~~0 1 2 (52)~~	~~1 5 0 1 . 8 5 (55)~~	~~53 48.7~~
3.	(70)	(73)	

Card 2 2 | A (1) Duplicate columns 3 through 10 from Card 1

	Component Code	ppmw	Component Code	ppmw
4.	(11)	(14)	(20)	(23)
5.	(29)	(32)	(38)	(41)
6.	(47)	(50)	(56)	(59)

Remarks:

ANALYSIS DATA SHEET

(AMBIENT AND BAG)

1 | A
1

1. Radian Valve/Pump ID# 0 2 ~~V~~ ~~A~~ EX 0 0 0 2 (3) 2. Unit/Process Coke

3. Plant Name Republic

4. Date (11) Mo. 1 2 Day 1 3 Yr. 8 0 5. Analyst's Initials G J G (17)

6. Time (Military) 1 5 0 0 (20) 7. N.B. #_____ 8. Page #_____

9. Instrument HP 5730 GC 2 (24) B

AMBIENT AIR

	Component Code	ppmw
1.	0 1 2 (25)	1 9 . 7 3 (28)
2.	(43)	(46)
3.	(61)	(64)

BAG SAMPLE

Component Code	ppmw
0 1 2 (34)	5 0 . 8 5 (37)
(52)	(55)
(70)	(73)

Card 2 2 | A (1) Duplicate columns 3 through 10 from Card 1

	Component Code	ppmw	Component Code	ppmw
4.	(11)	(14)	(20)	(23)
5.	(29)	(32)	(38)	(41)
6.	(47)	(50)	(56)	(59)

Remarks:

ANALYSIS DATA SHEET

(AMBIENT AND BAG)

1 | A
1

1. Radian Valve/Pump ID# 0 2 ~~1 A~~ EX 0 0 0 2 (3) 2. Unit/Process Coke Plant

3. Plant Name Republic Steel

4. Date (Mo. Day Yr.) 1 2 1 2 8 0 (11) 5. Analyst's Initials C J 6 (17)

6. Time (Military) 1 5 1 0 (20) 7. N.B. #_____ 8. Page #_____

9. Instrument Byron 301C THC 1 (24)

AMBIENT AIR

Component Code	ppmw
1. 9 9 8 (25)	8 7 . 4 (28) 89.4 85.4
2. (43)	(46)
3. (61)	(64)

BAG SAMPLE

Component Code	ppmw A	ppmw B
1. 9 9 8 (34)	(37) 1092 1130	
2. ~~9 9 8~~ (52)		~~1 5 5 . 4~~ (55) ~~1 7 5 . 8~~ 155.2 155.6
3. (70)	(73)	

Card 2 2 | A (1) Duplicate columns 3 through 10 from Card 1

Component Code	ppmw	Component Code	ppmw A	ppmw B
4. (11)	(14)	(20)	(23)	
5. (29)	(32)	8 8 8 (38)	9 9 0 0 (41)	
6. 7 7 7 (47)	(50)	~~8 8 8~~ (56)		~~1 7 0 0~~ (59)

Remarks:

ANALYSIS DATA SHEET

(AMBIENT AND BAG)

1 | A
1

1. Radian Valve/Pump ID# 0 2 ~~V A~~ EX 0 0 0 2 (3)

2. Unit/Process Coke

3. Plant Name Republic

4. Date (11) Mo. 1 2 Day 1 3 Yr. 8 0

5. Analyst's Initials C J G (17)

6. Time (Military) 1 5 1 0 (20)

7. N.B. #_____ 8. Page #_____

9. Instrument Byron 301C THC 1 (24)

B

AMBIENT AIR

	Component Code	ppmw
1.	9 9 8 (25)	1 8 7 . 4 (28)
2.	(43)	(46)
3.	(61)	(64)

BAG SAMPLE

Component Code	ppmw
9 9 8 (34)	1 1 5 5 . 4 (37)
(52)	(55)
(70)	(73)

Card 2 2 | A (1) Duplicate columns 3 through 10 from Card 1

	Component Code	ppmw	Component Code	ppmw
4.	(11)	(14)	(20)	(23)
5.	(29)	(32)	(38)	(41)
6.	7 7 7 (47)	(50)	8 8 8 (56)	1 1 7 0 0 (59)

Remarks:

ANALYSIS DATA SHEET

(AMBIENT AND BAG)

1 | A
1

1. Radian Valve/Pump ID# 0 2 ~~V 1 A~~ EX 0 1 0 1 0 4 (3) 2. Unit/Process Coke Plant

3. Plant Name Republic Steel

4. Date (Mo. Day Yr.) 1 2 1 2 8 0 (11) 5. Analyst's Initials C J G (17)

6. Time (Military) 1 6 1 0 (20) 7. N.B. #_____ 8. Page #_____

9. Instrument Byron 301CTHC 1 (24) A

AMBIENT AIR

	Component Code (25)	ppmw (28)	
1.	9 9 8	1 4 4	158.8 129.2 Not enough sample
2.	(43)	(46)	
3.	(61)	(64)	

BAG SAMPLE

	Component Code (34)	ppmw A (37)	
	9 9 8	4 3 0 . 1 5	421 440
	B		
	~~9 9 8~~ (52)	~~2 1 8 . 1 2~~ (55)	~~279.6 276.8~~
3.	(70)	(73)	

Card 2 2 | A (1) Duplicate columns 3 through 10 from Card 1

	Component Code (11)	ppmw (14)	Component Code (20)	ppmw (23)
4.				
				A
5.	(29)	(32)	8 8 8 (38)	3 8 0 0 (41)
				B
6.	7 7 7 (47)	1 9 0 0 (50)	~~8 8 8~~ (56)	~~2 6 0 0~~ (59)

Remarks:

ANALYSIS DATA SHEET

(AMBIENT AND BAG)

1 | A
1

1. Radian Valve/Pump ID# 0 2 ~~V A~~ EX 0 0 0 4 (3) 2. Unit/Process Coke

3. Plant Name Republic

4. Date (11) Mo. 1 2 Day 1 3 Yr. 8 0

5. Analyst's Initials C J G (17)

6. Time (Military) 1 6 1 0 (20)

7. N.B. #_____ 8. Page #_____

9. Instrument Byron 301C THC 1 (24) B

AMBIENT AIR

	Component Code	ppmw
1.	9 9 8 (25)	1 4 4 (28)
2.	(43)	(46)
3.	(61)	(64)

BAG SAMPLE

	Component Code	ppmw
	9 9 8 (34)	2 7 8 . 2 (37)
	(52)	(55)
	(70)	(73)

Card 2 2 | A (1) Duplicate columns 3 through 10 from Card 1

	Component Code	ppmw
4.	(11)	(14)
5.	(29)	(32)
6.	7 7 7 (47)	1 1 9 0 0 (50)

Component Code	ppmw
(20)	(23)
(38)	(41)
8 8 8 (56)	1 2 6 0 0 (59)

Remarks:

ANALYSIS DATA SHEET

(AMBIENT AND BAG)

1 | A
1

1. Radian Valve/Pump ID# 012 ~~VA~~ EX 010014 (3) 2. Unit/Process Coke Plant

3. Plant Name Republic Steel

4. Date (Mo. Day Yr.) 12 12 80 (11) 5. Analyst's Initials CJG (17)

6. Time (Military) 1615 (20) 7. N.B. #_____ 8. Page #_____

9. Instrument HP 5730 GC 2 (24) A

AMBIENT AIR			BAG SAMPLE		
Component Code	ppmw		Component Code	ppmw A	
1. 012 (25)	26.19 (28)	28.24 25.56	012 (34)	71.995 (37)	75.99 68
2. (43)	(46)		~~012~~ (52)	~~41.115~~ B (55)	43.47 38.88
3. (61)	(64)		(70)	(73)	

Card 2 2 | A (1) Duplicate columns 3 through 10 from Card 1

Component Code	ppmw	Component Code	ppmw
4. (11)	(14)	(20)	(23)
5. (29)	(32)	(38)	(41)
6. (47)	(50)	(56)	(59)

Remarks:

ANALYSIS DATA SHEET

(AMBIENT AND BAG)

1 | A
1

1. Radian Valve/Pump ID# 0 2 ~~V~~ ~~A~~ EX 0 0 0 4 (3)

2. Unit/Process coke

3. Plant Name Republic

4. Date (11) Mo. 1 2 Day 1 ~~3~~ Yr. 8 0

5. Analyst's Initials C J G (17)

6. Time (Military) 1 6 1 5 (20)

7. N.B. #_____ 8. Page #_____

9. Instrument HP 5730 GC Z (24) B

AMBIENT AIR

	Component Code	ppmw
1.	0 1 2 (25)	2 6 . 9 (28)
2.	(43)	(46)
3.	(61)	(64)

BAG SAMPLE

Component Code	ppmw
0 1 2 (34)	4 1 . 1 7 5 (37)
(52)	(55)
(70)	(73)

Card 2 2 | A (1) Duplicate columns 3 through 10 from Card 1

	Component Code	ppmw	Component Code	ppmw
4.	(11)	(14)	(20)	(23)
5.	(29)	(32)	(38)	(41)
6.	(47)	(50)	(56)	(59)

Remarks:

ANALYSIS DATA SHEET

(AMBIENT AND BAG)

1 | A
1

1. Radian Valve/Pump ID# 0 2 ~~1 A 1~~ P W S 0 2 1 1 (3) 2. Unit/Process Coke Plant

3. Plant Name Republic Steel

4. Date (11) Mo. 1 2 Day 1 0 Yr. 8 0 5. Analyst's Initials C J G (17)

6. Time (Military) 1 6 0 0 (20) 7. N.B. #_____ 8. Page #_____

9. Instrument Byron 301C THC 1 (24)

AMBIENT AIR

	Component Code	ppmw	
1.	9 9 8 (25)	4 7 . 0 5 (28)	47.6 46.5
2.	(43)	(46)	
3.	(61)	(64)	

BAG SAMPLE

Component Code	ppmw	
9 9 8 (34)	4 5 0 5 0 (37)	45100 45,000
(52)	(55)	
(70)	(73)	

Card 2 2 | A (1) Duplicate columns 3 through 10 from Card 1

	Component Code	ppmw	Component Code	ppmw
4.	(11)	(14)	(20)	(23)
5.	(29)	(32)	(38)	(41)
6.	7 7 7 (47)	1 9 0 0 (50)	8 8 8 (56)	2 0 0 0 0 (59)

Remarks:

ANALYSIS DATA SHEET

(AMBIENT AND BAG)

1 | A
1

1. Radian Valve/Pump ID# 0 2 ~~1 4~~ 6 0 2 1 1 (3) — P U S

2. Unit/Process Coke Plant

3. Plant Name Republic Steel

4. Date (Mo. Day Yr.) 1 2 1 0 8 0 (11)

5. Analyst's Initials C J 6 (17)

6. Time (Military) 1 6 0 0 (20)

7. N.B. #_____ 8. Page #_____

9. Instrument HP 5730 GC 2 (24)

AMBIENT AIR

	Component Code	ppmw
1.	0 1 2 (25)	1 6 7 . 5 3 (28) 75.64 59.41
2.	(43)	(46)
3.	(61)	(64)

BAG SAMPLE

	Component Code	ppmw
		3 5 5 3 6 5
	0 1 2 (34)	~~3 5 5 3 5 1 . 5~~ (37) 36584 34487
	(52)	(55)
	(70)	(73)

Card 2 2 | A (1) Duplicate columns 3 through 10 from Card 1

	Component Code	ppmw	Component Code	ppmw
4.	(11)	(14)	(20)	(23)
5.	(29)	(32)	(38)	(41)
6.	(47)	(50)	(56)	(59)

Remarks:

ANALYSIS DATA SHEET

(AMBIENT AND BAG)

1 | A
1

1. Radian Valve/Pump ID# PUS 0218 (3) 2. Unit/Process Coke Plant

3. Plant Name Republic Steel

4. Date Mo. Day Yr. 12 11 80 (11) 5. Analyst's Initials CJG (17)

6. Time (Military) 1645 (20) 7. N.B. #_____ 8. Page #_____

9. Instrument Byron 301C THC 1 (24)

AMBIENT AIR			BAG SAMPLE		
Component Code	ppmw		Component Code	ppmw	
1. 918 (25)	2405.5 (28)	404 407	918 (34)	14590 (37)	14720 14460
2. (43)	(46)		(52)	(55)	
3. (61)	(64)		(70)	(73)	

Card 2 2 | A (1) Duplicate columns 3 through 10 from Card 1

Component Code	ppmw		Component Code	ppmw	
4. (11)	(14)		(20)	(23)	
5. (29)	(32)		(38)	(41)	
6. 777 (47)	(50)		888 (56)	(59)	

Remarks: No OVA readings - ran out of H_2

ANALYSIS DATA SHEET

(AMBIENT AND BAG)

1 | A
1

1. Radian Valve/Pump ID# P U S 0 2 ~~1 A 0~~ 0 2 8 (3) 2. Unit/Process Coke Plant

3. Plant Name Republic Steel

4. Date (11) Mo. 12 Day 11 Yr. 80 5. Analyst's Initials CJG (17)

6. Time (Military) 1630 (20) 7. N.B. #_____ 8. Page #_____

9. Instrument HP 5730 GC 2 (24)

AMBIENT AIR

	Component Code	ppmw	
1.	012 (25)	2721.2 (28)	275.9 268.5
2.	(43)	(46)	
3.	(61)	(64)	

BAG SAMPLE

	Component Code	ppmw	
	012 (34)	13412 (37)	13541 13453
	(52)	(55)	
	(70)	(73)	

Card 2 2 | A (1) Duplicate columns 3 through 10 from Card 1

	Component Code	ppmw	Component Code	ppmw
4.	(11)	(14)	(20)	(23)
5.	(29)	(32)	(38)	(41)
6.	(47)	(50)	(56)	(59)

98

Remarks: QC 12/11/80 P.M. End of day

740 743
740 742 = 741.4 ppmw
742

Correct Value 751 ppm

UNIT #2

ANALYSIS DATA SHEET

(AMBIENT AND BAG)

1 | A
1

1. Radian Valve/Pump ID# 0 2 ~~1 4~~ 6 1 1 1 9 (PUS) 2. Unit/Process Coke Plant
3

3. Plant Name Republic Steel

4. Date Mo. Day Yr. 1 2 1 0 8 0
11

5. Analyst's Initials C J 6
17

6. Time (Military) 1 2 1 3
20

7. N.B. #_____ 8. Page #_____

9. Instrument Byron 301C THC 1
24

AMBIENT AIR

	Component Code	ppmw
1.	9 9 8 (25)	7 2 9 (28) ~~730~~ ~~730~~ 728
2.	(43)	(46)
3.	(61)	(64)

BAG SAMPLE

	Component Code	ppmw
1.	9 9 8 (34)	6 8 6 0 0 (37) 68700 68500
2.	(52)	(55)
3.	(70)	(73)

Card 2 2 | A Duplicate columns 3 through 10 from Card 1
1

	Component Code	ppmw	Component Code	ppmw
4.	(11)	(14)	(20)	(23)
5.	(29)	(32)	(38)	(41)
6.	7 7 7 (47)	3 8 0 0 (50)	8 8 8 (56)	4 2 0 0 0 (59)

Remarks:

ANALYSIS DATA SHEET

(AMBIENT AND BAG)

1 | A
1

1. Radian Valve/Pump ID# 012 ~~V-A-10~~ PUS 1119 (3) 2. Unit/Process Coke Plant

3. Plant Name Republic Steel

4. Date (Mo. Day Yr.) 12 10 80 (11) 5. Analyst's Initials CJG (17)

6. Time (Military) 1210 (20) 7. N.B. #_____ 8. Page #_____

9. Instrument HP 5730 GC 2 (24)

AMBIENT AIR

	Component Code	ppmw
1.	012 (25)	6841.1 (28)
2.	(43)	(46)
3.	(61)	(64)

BAG SAMPLE

	Component Code	~~ppmw~~
	012 (34)	~~6341.1~~ 63,443 (37)
	(52)	(55)
	(70)	(73)

66503
60383

Card 2 2 | A (1) Duplicate columns 3 through 10 from Card 1

	Component Code	ppmw	Component Code	ppmw
4.	(11)	(14)	(20)	(23)
5.	(29)	(32)	(38)	(41)
6.	(47)	(50)	(56)	(59)

Remarks:

ANALYSIS DATA SHEET

(AMBIENT AND BAG)

1 | A
1

1. Radian Valve/Pump ID# 0 2 ~~V 1 0~~ P U S 1 1 2 0 (3) 2. Unit/Process Coke Plant

3. Plant Name Republic Steel

4. Date (11) Mo. 1 2 Day 1 1 Yr. 8 0 5. Analyst's Initials C J 6 (17)

6. Time (Military) 0 9 3 5 (20) 7. N.B. #_____ 8. Page #_____

9. Instrument Byron 301C THC 1 (24)

AMBIENT AIR

Component Code	ppmw	
1. 9 9 8 (25)	1 5 9 . 8 5 (28)	59.8 59.9
2. (43)	(46)	
3. (61)	(64)	

BAG SAMPLE

Component Code	ppmw	
9 9 8 (34)	1 0 8 2 0 0 (37)	109200 107200
(52)	(55)	
(70)	(73)	

Card 2 2 | A (1) Duplicate columns 3 through 10 from Card 1

Component Code	ppmw	Component Code	ppmw
4. (11)	(14)	(20)	(23)
5. (29)	(32)	(38)	(41)
6. 7 7 7 (47)	8 5 0 (50)	8 8 8 (56)	1 0 0 0 0 1 (59)

Remarks:

ANALYSIS DATA SHEET

(AMBIENT AND BAG)

1 | A
1

1. Radian Valve/Pump ID# 0 2 ~~V 1 4 0~~ P U S 1 1 2 0 (3) 2. Unit/Process Coke Plant

3. Plant Name Republic Steel

4. Date (Mo. Day Yr.) 1 2 1 1 8 0 (11) 5. Analyst's Initials C J G (17)

6. Time (Military) 1 1 1 0 0 (20) 7. N.B. #_____ 8. Page #_____

9. Instrument HP 5730GC 2 (24)

AMBIENT AIR

	Component Code	ppmw
1.	0 1 2 (25)	1 7 4 . 1 9 3 (28) 85.66 64.2
2.	(43)	(46)
3.	(61)	(64)

BAG SAMPLE

Component Code	ppmw
0 1 2 (34)	1 9 3 8 1 1 1 (37) 100760 36862
(52)	(55)
(70)	(73)

Card 2 2 | A (1) Duplicate columns 3 through 10 from Card 1

	Component Code	ppmw	Component Code	ppmw
4.	(11)	(14)	(20)	(23)
5.	(29)	(32)	(38)	(41)
6.	(47)	(50)	(56)	(59)

Remarks:

ANALYSIS DATA SHEET

(AMBIENT AND BAG)

1 | A
1

1. Radian Valve/Pump ID# 012 V A 010312 (3) 2. Unit/Process Coke Plant

3. Plant Name Republic Steel

4. Date (Mo. Day Yr.) 112180 (11) 5. Analyst's Initials CJG (17)

6. Time (Military) 1515 (20) 7. N.B. #_____ 8. Page #_____

9. Instrument Byron 301C THC 1 (24)

AMBIENT AIR

	Component Code	ppmw
1.	918 (25)	258 (28) 258.8 257.2
2.	(43)	(46)
3.	(61)	(64)

BAG SAMPLE

	Component Code	ppmw
1.	918 (34)	6516010 (37) 65400 65800
2.	(52)	(55)
3.	(70)	(73)

Card 2 2 | A (1) Duplicate columns 3 through 10 from Card 1

	Component Code	ppmw	Component Code	ppmw
4.	(11)	(14)	(20)	(23)
5.	(29)	(32)	(38)	(41)
6.	777 (47)	12010 (50)	818 (56)	1010011 (59)

Remarks:

ANALYSIS DATA SHEET

(AMBIENT AND BAG)

1 | A
1

1. Radian Valve/Pump ID# 0 2 V A 0 0 3 2 (3) 2. Unit/Process Coke Plant

3. Plant Name Republic Steel

4. Date (11) Mo. 1 2 Day 1 0 Yr. 8 0 5. Analyst's Initials C J G (17)

6. Time (Military) 1 5 1 5 (20) 7. N.B. #_____ 8. Page #_____

9. Instrument HP 5730 GC 2 (24)

AMBIENT AIR

	Component Code	ppmw
1.	0 1 2 (25)	1 1 2 3 3 (28) 236.7 229.3
2.	(43)	(46)
3.	(61)	(64)

BAG SAMPLE

	Component Code	ppmw
	C 1 2 (34)	~~6 0 2 1 7~~ ~~6 6 2 1 6 . 5~~ (37) 63410 57023
	(52)	(55)
	(70)	(73)

Card 2 2 | A (1) Duplicate columns 3 through 10 from Card 1

	Component Code	ppmw	Component Code	ppmw
4.	(11)	(14)	(20)	(23)
5.	(29)	(32)	(38)	(41)
6.	(47)	(50)	(56)	(59)

Remarks:

ANALYSIS DATA SHEET

(AMBIENT AND BAG)

1 | A
1

1. Radian Valve/Pump ID# 012 V A 010713 (3) 2. Unit/Process Coke Plant

3. Plant Name Republic Steel

4. Date Mo. Day Yr. 112280 (11) 5. Analyst's Initials CJG (17)

6. Time (Military) 1730 (20) 7. N.B. #_____ 8. Page #_____

9. Instrument Byron 301C THC 1 (24)

AMBIENT AIR

	Component Code	ppmw	
1.	918 (25)	13.168 (28)	13.52 13.84
2.	(43)	(46)	
3.	(61)	(64)	

BAG SAMPLE

Component Code	ppmw	
918 (34)	2431.6 (37)	244.4 242.8
(52)	(55)	
(70)	(73)	

Card 2 2 | A (1) Duplicate columns 3 through 10 from Card 1

	Component Code	ppmw	Component Code	ppmw
4.	(11)	(14)	(20)	(23)
5.	(29)	(32)	(38)	(41)
6.	777 (47)	10 (50)	888 (56)	(59)

Remarks:

ANALYSIS DATA SHEET

(AMBIENT AND BAG)

1 | A
1

1. Radian Valve/Pump ID# 02 | V | A | 90 | 7 | 3 (3) 2. Unit/Process Coke Plant

3. Plant Name Republic Steel

4. Date (Mo. Day Yr.) 12 | 12 | 80 (11) 5. Analyst's Initials CJG (17)

6. Time (Military) 1730 (20) 7. N.B. #_____ 8. Page #_____

9. Instrument HP 5730 GC 2 (24)

AMBIENT AIR

	Component Code	ppmw	
1.	012 (25)	16.1685 (28)	6.92 6.43
2.	(43)	(46)	
3.	(61)	(64)	

BAG SAMPLE

	Component Code	ppmw	
	012 (34)	151.9 (37)	160.8 143
	(52)	(55)	
	(70)	(73)	

Card 2 2 | A (1) Duplicate columns 3 through 10 from Card 1

	Component Code	ppmw	Component Code	ppmw
4.	(11)	(14)	(20)	(23)
5.	(29)	(32)	(38)	(41)
6.	(47)	(50)	(56)	(59)

Remarks:

ANALYSIS DATA SHEET

(AMBIENT AND BAG)

1 | A
1

1. Radian Valve/Pump ID# 0 2 V A 0 1 2 1 (3) 2. Unit/Process Coke Plant

3. Plant Name Republic Steel

4. Date (11) Mo. 1 2 Day 1 1 Yr. 8 0 5. Analyst's Initials C J 6 (17)

6. Time (Military) 1 5 3 0 (20) 7. N.B. #_____ 8. Page #_____

9. Instrument Byron 301C THC 1 (24)

AMBIENT AIR

Component Code		ppmw	
1.	9 9 8 (25)	1 4 6 . 6 (28)	147.2 146
2.	(43)	(46)	
3.	(61)	(64)	

BAG SAMPLE

Component Code		ppmw	
	9 9 8 (34)	2 5 0 (37)	249.6 250.4
	(52)	(55)	
	(70)	(73)	

Card 2 2 | A (1) Duplicate columns 3 through 10 from Card 1

Component Code		ppmw		Component Code		ppmw	
4.	(11)	(14)			(20)	(23)	
5.	(29)	(32)			(38)	(41)	
6.	7 7 7 (47)	1 1 1 0 0 (50)		8 8 8 (56)		1 1 6 0 0 (59)	

Remarks:

ANALYSIS DATA SHEET

(AMBIENT AND BAG)

1 | A
1

1. Radian Valve/Pump ID# 012VA01121 (3) 2. Unit/Process Coke Plant

3. Plant Name Republic Steel

4. Date (Mo. Day Yr.) 12 11 80 (11) 5. Analyst's Initials CJG (17)

6. Time (Military) 1645 (20) 7. N.B. #_____ 8. Page #_____

9. Instrument HP 5730 GC 2 (24)

AMBIENT AIR

	Component Code	ppmw	
1.	012 (25)	1511.8 (28)	148.4 155.2
2.	(43)	(46)	
3.	(61)	(64)	

BAG SAMPLE

Component Code	ppmw	
012 (34)	1811.25 (37)	185.7 176.8
(52)	(55)	
(70)	(73)	

Card 2 2 | A (1) Duplicate columns 3 through 10 from Card 1

	Component Code	ppmw	Component Code	ppmw
4.	(11)	(14)	(20)	(23)
5.	(29)	(32)	(38)	(41)
6.	(47)	(50)	(56)	(59)

Remarks:

ANALYSIS DATA SHEET

(AMBIENT AND BAG)

1 | A
1

1. Radian Valve/Pump ID# 012 V A 01212 (3) 2. Unit/Process Coke Plant

3. Plant Name Republic Steel

4. Date (Mo. Day Yr.) 112180 (11) 5. Analyst's Initials CJG (17)

6. Time (Military) 14:30 (20) 7. N.B. #_____ 8. Page #_____

9. Instrument Byron 301C THC 1 (24)

AMBIENT AIR

	Component Code	ppmw
1.	998 (25)	1519 (28) 1162 1156
2.	(43)	(46)
3.	(61)	(64)

BAG SAMPLE

	Component Code	ppmw
1.	998 (34)	17015 (37) 6680 6730
2.	(52)	(55)
3.	(70)	(73)

Card 2 2 | A (1) Duplicate columns 3 through 10 from Card 1

	Component Code	ppmw	Component Code	ppmw
4.	(11)	(14)	(20)	(23)
5.	(29)	(32)	(38)	(41)
6.	777 (47)	15000 (50)	888 (56)	70000 (59)

Remarks:

ANALYSIS DATA SHEET

(AMBIENT AND BAG)

1 | A
1

1. Radian Valve/Pump ID# 0 2 V A 0 1 2 2 (3) 2. Unit/Process Coke Plant

3. Plant Name Republic Steel

4. Date (11) Mo. 12 Day 11 Yr. 80 5. Analyst's Initials CJG (17)

6. Time (Military) 1500 (20) 7. N.B. #_____ 8. Page #_____

9. Instrument HP 5730 GC 2 (24)

AMBIENT AIR

	Component Code	ppmw
1.	0 1 2 (25)	1 1 0 2 7 (28) 1044 1010
2.	(43)	(46)
3.	(61)	(64)

BAG SAMPLE

Component Code	ppmw
0 1 2 (34)	1 6 5 0 6 (37) 6605 6407
(52)	(55)
(70)	(73)

Card 2 2 | A (1) Duplicate columns 3 through 10 from Card 1

	Component Code	ppmw	Component Code	ppmw
4.	(11)	(14)	(20)	(23)
5.	(29)	(32)	(38)	(41)
6.	(47)	(50)	(56)	(59)

Remarks:

ANALYSIS DATA SHEET

(AMBIENT AND BAG)

1 | A
1

1. Radian Valve/Pump ID# 0 2 V A 0 1 1 2 3 (3) 2. Unit/Process Coke Plant

3. Plant Name Republic Steel

4. Date Mo. 1 2 Day 1 1 Yr. 8 0 (11) 5. Analyst's Initials C S G (17)

6. Time (Military) 1 0 1 0 (20) 7. N.B. #_____ 8. Page #_____

9. Instrument Byron 301C THC 1 (24)

AMBIENT AIR			BAG SAMPLE		
Component Code	ppmw		Component Code	ppmw	
1. 9 9 8 (25)	2 3 9 . 4 (28)	239.6 239.2	9 9 8 (34)	5 5 0 . 5 (37)	549 552
2. (43)	(46)		(52)	(55)	
3. (61)	(64)		(70)	(73)	

Card 2 2 | A (1) Duplicate columns 3 through 10 from Card 1

	Component Code	ppmw	Component Code	ppmw
4.	(11)	(14)	(20)	(23)
5.	(29)	(32)	(38)	(41)
6.	7 7 7 (47)	9 2 0 (50)	8 8 8 (56)	2 0 0 0 (59)

Remarks:

ANALYSIS DATA SHEET

(AMBIENT AND BAG)

1 | A
1

1. Radian Valve/Pump ID# 0 2 V A 0 1 2 3 (3) 2. Unit/Process Coke Plant

3. Plant Name Republic Steel

4. Date Mo. 1 2 Day 1 1 Yr. 8 0 (11) 5. Analyst's Initials C 5 6 (17)

6. Time (Military) 1 3 5 0 (20) 7. N.B. #_____ 8. Page #_____

9. Instrument HP 5730 GC 2 (24)

AMBIENT AIR

	Component Code	ppmw	
1.	0 1 2 (25)	2 1 2 . 9 (28)	209.2 216.6
2.	(43)	(46)	
3.	(61)	(64)	

BAG SAMPLE

Component Code	ppmw	
0 1 2 (34)	4 1 3 . 2 (37)	413.7 412.7
(52)	(55)	
(70)	(73)	

Card 2 2 | A (1) Duplicate columns 3 through 10 from Card 1

	Component Code	ppmw	Component Code	ppmw
4.	(11)	(14)	(20)	(23)
5.	(29)	(32)	(38)	(41)
6.	(47)	(50)	(56)	(59)

Remarks:

ANALYSIS DATA SHEET

(AMBIENT AND BAG)

1 | A
1

1. Radian Valve/Pump ID# 012V|A|011214 (3) 2. Unit/Process Coke Plant

3. Plant Name Republic Steel

4. Date (Mo. Day Yr.) 12 11 80 (11) 5. Analyst's Initials CJG (17)

6. Time (Military) 12510 (20) 7. N.B. #_____ 8. Page #_____

9. Instrument Byron 301C THC 1 (24)

AMBIENT AIR

	Component Code	ppmw
1.	9918 (25)	114 108 (28)
2.	(43)	(46)
3.	(61)	(64)

BAG SAMPLE

	Component Code	ppmw
	9918 (34)	14080 14120 (37)
	(52)	(55)
	(70)	(73)

Card 2 2 | A (1) Duplicate columns 3 through 10 from Card 1

	Component Code	ppmw	Component Code	ppmw
4.	(11)	(14)	(20)	(23)
5.	(29)	(32)	(38)	(41)
6.	777 (47)	113010 (50)	888 (56)	1451010 (59)

Remarks: GC A 18770 B 18680 Average Total Hydrocarbon Co 18725

ANALYSIS DATA SHEET

(AMBIENT AND BAG)

1 | A
1

1. Radian Valve/Pump ID# 012 | V | A | 011214 (3) 2. Unit/Process Coke Plant

3. Plant Name Republic Steel

4. Date (Mo. Day Yr.) 12 | 11 | 80 (11) 5. Analyst's Initials CJG (17)

6. Time (Military) 1415 (20) 7. N.B. #_____ 8. Page #_____

9. Instrument HP 5730 GC 2 (24)

AMBIENT AIR

	Component Code	ppmw
1.	012 (25)	1041.14 (28) 105 103.7
2.	(43)	(46)
3.	(61)	(64)

BAG SAMPLE

	Component Code	ppmw
	16215	
	012 (34)	~~16211.5~~ (37) ~~162~~ 16140
	(52)	(55)
	(70)	(73)

Card 2 2 | A (1) Duplicate columns 3 through 10 from Card 1

	Component Code	ppmw	Component Code	ppmw
4.	(11)	(14)	(20)	(23)
5.	(29)	(32)	(38)	(41)
6.	(47)	(50)	(56)	(59)

Remarks:

ANALYSIS DATA SHEET

(AMBIENT AND BAG)

1 | A
1

1. Radian Valve/Pump ID# 0 2 V A 0 1 1 2 5 (3) 2. Unit/Process Coke Plant

3. Plant Name Republic Steel

4. Date (Mo. Day Yr.) 1 2 1 1 8 0 (11) 5. Analyst's Initials C 5 6 (17)

6. Time (Military) 1 6 0 0 (20) 7. N.B. #_____ 8. Page #_____

9. Instrument Byron 301C THC 1 (24)

AMBIENT AIR			BAG SAMPLE		
Component Code		ppmw	Component Code		ppmw
1.	9 9 8 (25)	4 2 2 (28) 427 417	9 9 8 (34)	5 8 8 . 5 (37)	572 605
2.	(43)	(46)	(52)	(55)	
3.	(61)	(64)	(70)	(73)	

Card 2 2 | A (1) Duplicate columns 3 through 10 from Card 1

	Component Code	ppmw	Component Code	ppmw
4.	(11)	(14)	(20)	(23)
5.	(29)	(32)	(38)	(41)
6.	7 7 7 (47)	1 7 0 0 (50)	8 8 8 (56)	2 5 0 0 (59)

Remarks:

ANALYSIS DATA SHEET

(AMBIENT AND BAG)

1 | A
1

1. Radian Valve/Pump ID# 0 2 V A 0 1 2 5 (3) 2. Unit/Process Coke Plant

3. Plant Name Republic Steel

4. Date Mo. 12 Day 11 Yr. 80 (11) 5. Analyst's Initials C S 6 (17)

6. Time (Military) 1 7 1 5 (20) 7. N.B. #_____ 8. Page #_____

9. Instrument HP 5730 6C 2 (24)

AMBIENT AIR

	Component Code	ppmw	
1.	0 1 2 (25)	3 1 8 1 . 1 8 5 (28)	318.7 319
2.	(43)	(46)	
3.	(61)	(64)	

BAG SAMPLE

Component Code	ppmw	
0 1 2 (34)	4 7 2 1 . 1 4 (37)	470.1 474.7
(52)	(55)	
(70)	(73)	

Card 2 2 | A (1) Duplicate columns 3 through 10 from Card 1

	Component Code	ppmw	Component Code	ppmw
4.	(11)	(14)	(20)	(23)
5.	(29)	(32)	(38)	(41)
6.	(47)	(50)	(56)	(59)

Remarks:

ANALYSIS DATA SHEET

(AMBIENT AND BAG)

1 | A
1

1. Radian Valve/Pump ID# 012 V A 01129 (3) 2. Unit/Process Coke Plant

3. Plant Name Republic Steel

4. Date (Mo. Day Yr.) 12 11 80 (11) 5. Analyst's Initials CJG (17)

6. Time (Military) 1500 (20) 7. N.B. #_____ 8. Page #_____

9. Instrument Byron 301C THC 1 (24)

AMBIENT AIR

	Component Code	ppmw
1.	918 (25)	625 (28) 632 618
2.	(43)	(46)
3.	(61)	(64)

BAG SAMPLE

	Component Code	ppmw 1331
	~~918~~ (34)	~~625~~ (37) ~~632~~ ~~618~~ 1342 1320
	918 (52)	(55)
	(70)	(73)

Card 2 2 | A (1) Duplicate columns 3 through 10 from Card 1

	Component Code	ppmw	Component Code	ppmw
4.	(11)	(14)	(20)	(23)
5.	(29)	(32)	(38)	(41)
6.	717 (47)	31010 (50)	888 (56)	69010 (59)

Remarks:

ANALYSIS DATA SHEET

(AMBIENT AND BAG)

1 | A
1

1. Radian Valve/Pump ID# 012VA011219 (3) 2. Unit/Process Coke Plant

3. Plant Name Republic Steel

4. Date Mo. 12 Day 11 Yr. 80 (11) 5. Analyst's Initials CJG (17)

6. Time (Military) 15:30 (20) 7. N.B. #_____ 8. Page #_____

9. Instrument HP 5730 GC 2 (24)

AMBIENT AIR

	Component Code	ppmw	
1.	012 (25)	5401.115 (28)	540.4 539.9
2.	(43)	(46)	
3.	(61)	(64)	

BAG SAMPLE

Component Code	ppmw	
012 (34)	1128.7 (37)	1308 1266
(52)	(55)	
(70)	(73)	

Card 2 2 | A (1) Duplicate columns 3 through 10 from Card 1

	Component Code	ppmw	Component Code	ppmw
4.	(11)	(14)	(20)	(23)
5.	(29)	(32)	(38)	(41)
6.	(47)	(50)	(56)	(59)

Remarks:

222.010-01 p03

Column #1
6'x 2mm g. 5% SP1200+ 1.75% Bentone 34 12-22-80
Temp 50°C Isoo
Helium carrier 30 cc/min
GC#8

8'x 2mm 10% TCEP on Chromosorb P.
at 60°C Isoo
GC#1 Nitrogen carrier 20 cc/min

		Col#1	Col#2		Average			D. gm/ml			
REFINY	Pump #23	67.8	69.4		68.6			0.8682			RESULTS OF LIQUID LINE ANALYSES
	#28	64.6	67.7		66.2			0.8648			
	#32	67.8	68.7		68.7			0.8662			
	#69	61.8	62		61.9			0.8653			
	#119	76.8	76.2		76.6			0.8639			
	#120	74.5	78.7		76.6			0.8698			
	#122	72.7	72.9		72.8			0.8700			
Light oil	—	71.4	71.6		71.5			0.8660			
Benzene	—	well						0.8700			
	#131	80.2	78.4		79.3			0.8700			
Scrubber	A	43.8	40.4		42.1			0.8519			

FID 250°C Inlet 150°C.
H_2 carrier air 300 cc/min

Benzene analysis in light oil for Calibration #1

COKE PLANT - UNIT #2
LIQUID LEAKS

LIQ LEAKS UNIT 2

$$\frac{vol\ (ml) \times \rho\ (g/ml)}{t\ (sec)} \times \overset{(\gamma)}{7.938} = \ ^{lb}/_{HR}\ THC$$

$$\left(\frac{lb}{HR}\right) \phi = THC\ (^{lb}/_{HR}) \times WT.\ FRACT.\ \phi$$

VA 23

THC: $\frac{1.3 \times .8682}{20.5} \times 7.988 = 0.43704\ ^{lb}/_{HR}$

$\phi = 0.437 \times .686 \qquad 0.29981\ ^{lb}/_{HR}$

PU 28 (1ml IN 9.5 sec) ⇒ THC = 0.72261 "
ϕ = 0.47837 "

PU 119 (1.2ml IN 5.2 sec) ⇒ THC = 1.5825 "
ϕ = 1.2122 "

PU 120 (1.2ml IN 2.5 sec) ⇒ THC = 3.31415 "
ϕ = 2.53864 "

VA 122 (1.7ml IN 212 sec) ⇒ THC = 0.055379 "
ϕ = 0.040316 "

VA 32 NO TIME [LEAK STOPPED AFTER SAMPLING — NEVER REOCCURRED - LIQ SAMPLE TAKEN BEFORE SAMPLING BY WEISENB
⇒ NO TIME (REMEMBER?)]

REPUBLIC STEEL
GADSDEN PLANT

B-5 OVA and TLV Calibration Data

UNIT #2

CALIBRATION CHECKING FORM

Month (1–2)	Day (3–4)	Instrument (5)	Screening Team (6–7)	Low standard ___ ppm calibration (8–13)	High standard ___ ppm calibration (14–19)	Dilution Probe Calibration (20–25)	UNIT (26)
12	08	3	01				2
12	09	3	01		6500	00	2
12	10	3	01		7500	100	2
12	10	4	01		1800		2
12	11	3	01		10001	700	2
12	11	4	01	500	2000		2
12	12	3	01		10601		2
12	12	4	01		2000		2

Comments: These calibrations were performed at Republic Steel

REPUBLIC STEEL
GADSDEN PLANT

B-6 Dry Gas Meter Calibration Data

UNIT #2

RADIAN
CORPORATION

Card 1 [1 | S] (1)

SAMPLE DATA SHEET

1. Radian Valve/Pump ID# DGMCF CALIB. (3)
2. Unit/Process COKE

3. Plant Name REPUBLIC

---

4. Date (11) Mo. 12 Day 09 Yr. 80
5. Sampler's Initials (17) DW

6. Time (20) (Military Time)
7. Cart ID# (24) 1
8. N.B.# ____
9. Page # ____

10. Meter #1 (25) 71571.120
11. Time #1 (37) 10
12. Meter #2 (31) 71651.611 HASTINGS 1.58 1.6025
13. Time #2 (41) 4

14. Temp #1 °F (45) 163 523
15. Temp #2 °F (48) 163

16. Bar. Press., in. Hg. (51) 30.118
17. ΔP, in. Hg. (56) 1.31.2 26.98

18. DGM Correction Factor (61) 1.01918
19. Meter # 715572

20. Vol. Org. Condensate ml (66)

21. Coll. time, minutes (71)
22. Specific Gravity of Organic Condensate (75)

23. Comment (78)

10
1.098423

UNIT #2

RADIAN
CORPORATION

Card 1 [1 | S] (1)

SAMPLE DATA SHEET

1. Radian Valve/Pump ID# DGMCF OALIB (3)
2. Unit/Process COKE
3. Plant Name REPUBLIC

4. Date (11) Mo. 12 Day 12 Yr. 80
5. Sampler's Initials DKJ (17)
6. Time (20) (Military Time)
7. Cart ID# 2 (24)
8. N.B.# ____
9. Page # ____
10. Meter #1 (25) 1916.13 1.9 1.93
11. Time #1 (37) 10
12. Meter #2 (31) 1010.80 1.8 2.25
13. Time #2 (41) 12
14. Temp #1 °F (45) 70 550
15. Temp #2 °F (48) 70
16. Bar. Press., in. Hg. (51) 30.121
17. ΔP, in. Hg. (56) .162 24.02
18. DGM Correction Factor (61) 1.0512
19. Meter # 713851
20. Vol. Org. Condensate ml (66)
21. Coll. time, minutes (71)
22. Specific Gravity of Organic Condensate (75)
23. Comment (78)

1.05155 2

REPUBLIC STEEL
GADSDEN PLANT

B-7 Accuracy Check Data

RADIAN
CORPORATION

Card 1 | 1 | S |
1

SAMPLE DATA SHEET

1. Radian Valve/Pump ID# ~~AC1210980~~ 02AC0001 (3) 22. Unit/Process COKE

3. Plant Name REPUBLIC

---

4. Date (11) Mo. Day Yr. 12 09 80

5. Sampler's Initials (17) DW

6. Time (20) (Military Time)

7. Cart ID# (24) 1 8. N.B.# ____ 9. Page # ____

10. Meter #1 (25) 7917.010

12. Meter #2 (31) 8021.175 — 12: 1.9167

11. Time #1 (37) 10

13. Time #2 (41) 5

14. Temp #1 °F (45) 163 — 14: 523

15. Temp #2 °F (48) 163

16. Bar. Press., in. Hg. (51) 30.1118

17. ΔP, in. Hg. (56) 1.1615 — 15: 28.53

18. DGM Correction Factor (61) 1.10918 — 16

19. Meter # 715572

20. Vol. Org. Condensate ml (66)

21. Coll. time, minutes (71)

22. Specific Gravity of Organic Condensate (75)

23. Comment (78)

BEFORE:

100 ml / 7.15 sec
6.95
7.15
6.95
6.95
6.95
6.95

⇒ 863.31 ml/min

127

17

ILR = 7.554 × 10⁻⁴ lb/HR

ΔMLR / ppmw = 9.159 × 10⁻⁶ ⇒ 82.48 ppmw

MLR = 8.817 × 10⁻⁴ lb/HR

⇒ 116.72% RECOV

RADIAN
CORPORATION

Card 1 [1 | S]
1

SAMPLE DATA SHEET

1. Radian Valve/Pump ID# ~~AC/12098~~ 02AC0002 / 2. Unit/Process COKE
3

3. Plant Name REPUBLIC

---

4. Date (Mo. Day Yr.) 12 09 80
11

5. Sampler's Initials DW
17

6. Time (Military Time) [ ]
20

7. Cart ID# 1
24

8. N.B.# ____ 9. Page # ____

10. Meter #1 17717.210
25

12. Meter #2 18121.816
31

13 1.2867

11. Time #1 10
37

13. Time #2 3
41

14 523

14. Temp #1 °F 163
45

15. Temp #2 °F 163
48

16. Bar. Press., in. Hg. 30.118
51

17. ΔP, in. Hg. 1.165
56

28.53

18. DGM Correction Factor 1.0196
61

10

19. Meter # 715572

20. Vol. Org. Condensate ml [ ]
66

21. Coll. time, minutes [ ]
71

22. Specific Gravity of Organic Condensate [ ]
75

23. Comment [ ]
78

Before

100ml / 6.95 sec ⇒ 858.018 ml/min
12

6.95
7.0
6.95
7.05
7.05
7.0

128

ILR = 8.2323 × 10^-4 lb/HR
26

MLR / ppmw = 9.012 × 10^-4 ⇒ 91.33 ppmw

MLR = 8.2538 × 10^-4 ⇒ 100.2 % RECOV

ANALYSIS DATA SHEET

(AMBIENT AND BAG)

1 | A
1

1. Radian Valve/Pump ID# 0 Z A C 0 0 0 1 ~~AC1209802~~ ~~0 2 A C~~ 3

2. Unit/Process Coke Plant

3. Plant Name ~~Wheeling Pitt. Steel~~ Republic Steel

4. Date (Mo. Day Yr.) ~~12 10 80~~ 11 12 09 80

5. Analyst's Initials C J G 17

6. Time (Military) 1630 20

7. N.B. #_____ 8. Page #_____

9. Instrument HP 5730 GC 2 24

AMBIENT AIR

	Component Code	ppmw
1.	~~0 1 2~~ 25	28
2.	43	46
3.	61	64

BAG SAMPLE

Component Code	ppmw	
0 1 2 34	9 6 . 3 37	99.2
52	55	93.4
70	73	

Card 2 2 | A 1 Duplicate columns 3 through 10 from Card 1

Component Code	ppmw	Component Code	ppmw
4. 11	14	20	23
5. 29	32	38	41
6. 47	50	56	59

Remarks:

~~HFP~~ ILR = 7.554×10^{-4} lb/HR

MLR = 8.817×10^{-4} lb/HR

⇒ 116.72% RECOV

ANALYSIS DATA SHEET

(AMBIENT AND BAG)

1 | A (1)

1. Radian Valve/Pump ID# 0 2 A C 0 0 0 2 ~~AC 120980~~ ~~V A~~ (3)

2. Unit/Process Coke Plant

3. Plant Name ~~Wheeling Pitts Steel~~ Republic Steel

4. Date Mo. Day Yr. 1 2 0 9 8 0 (11)

5. Analyst's Initials C J G (17)

6. Time (Military) (20)

7. N.B. #_____ 8. Page #_____

9. Instrument Byron 301C THC 1 (24)

AMBIENT AIR

Component Code		ppmw	
1.	~~9 9 8~~ (25)		(28)
2.	(43)		(46)
3.	(61)		(64)

BAG SAMPLE

Component Code		ppmw	
	~~9 9 8~~ (34) 9 9 7	1 9 1 . 5 5	(37)
	~~9 9 7~~ (52)	~~1 9 1 . 5 5~~	(55)
	(70)		(73)

Card 2 2 | A (1) Duplicate columns 3 through 10 from Card 1

Component Code		ppmw		Component Code		ppmw	
4.	(11)		(14)		(20)		(23)
5.	(29)		(32)		(38)		(41)
6.	~~9 9 7~~ (47)		(50)		~~8 8 8~~ (56)		(59)

130

Remarks:

1 x 100	20 x 5	20 x 10	20 x 20
77.8	74.3	105.4	108
78.9	74.4	106.4	107.2

UNIT #2

ANALYSIS DATA SHEET

(AMBIENT AND BAG)

1 | A
1

1. Radian Valve/Pump ID# BLIND STD (~~HH~~ | V | A) 3 2. Unit/Process Coke Plant

3. Plant Name ~~Republic Steel~~ Republic Steel

4. Date ~~Mo. Day Yr. 12 09 80~~ Mo. Day Yr. 11/2 10 80 5. Analyst's Initials CJG 17

6. Time (Military) 20 7. N.B. #_____ 8. Page #_____

9. Instrument HP 5730 GC 2 24

AMBIENT AIR

Component Code	ppmw
1. ~~CH4~~ 25	28
2. 43	46
3. 61	64

BAG SAMPLE

Component Code	ppmw
CH4 34	1042.3 37
52	55
70	73

Card 2 2 | A 1 Duplicate columns 3 through 10 from Card 1

Component Code	ppmw	Component Code	ppmw
4. 11	14	20	23
5. 29	32	38	41
6. 47	50	56	59

131

Remarks: BL. STD = 1075.9 ppmw

⇒ 96.9%

#2

ANALYSIS DATA SHEET

(AMBIENT AND BAG)

1 | A
1

1. Radian Valve/Pump ID# ~~[illegible]~~ V | A (3) BLIND STD

2. Unit/Process Coke Plant

3. Plant Name ~~Wheeling Pitts Steel~~ Republic Steel

4. Date (11) Mo. 1 | Day 2 0 | Yr. 9 8 0

5. Analyst's Initials C | J | G (17)

6. Time (Military) 1 5 0 0 (20)

7. N.B. #_____ 8. Page #_____

9. Instrument Byron 301C THC 1 (24)

AMBIENT AIR

	Component Code	ppmw
1.	~~9918~~ (25)	(28)
2.	(43)	(46)
3.	(61)	(64)

BAG SAMPLE

	Component Code	ppmw
	~~9918~~ (34)	(37)
	9 9 7 (52)	2 4 7 . 9 (55)
	(70)	(73)

Card 2 2 | A (1) Duplicate columns 3 through 10 from Card 1

	Component Code	ppmw	Component Code	ppmw
4.	(11)	(14)	(20)	(23)
5.	(29)	(32)	(38)	(41)
6.	~~[illegible]~~ (47)	(50)	~~[illegible]~~ (56)	(59)

132

Remarks:

20x20	200x2	200x5	200x10	20x50	20x10
244	225.4	237	244	266	300
242.8	220.8	239	235	262	264

BLIND STD = 262.7 ppmw ⇒ 94.4%

X