Note: This is a reference cited in *AP 42, Compilation of Air Pollutant Emission Factors, Volume I Stationary Point and Area Sources.* AP42 is located on the EPA web site at www.epa.gov/ttn/chief/ap42/

The file name refers to the reference number, the AP42 chapter and section. The file name "ref02_c01s02.pdf" would mean the reference is from AP42 chapter 1 section 2. The reference may be from a previous version of the section and no longer cited. The primary source should always be checked.

PARTICULATE EMISSION TESTS

ON

STACK #1-A

AT

ALABAMA BY PRODUCT COMPANY

MARCH 5, 1981

CONDUCTED IN

TARRANT CITY, ALABAMA

Do not use
No production data

TABLE OF CONTENTS

Chapter		Page
I.	Introduction	1
II.	Sampling and Analytical Procedures	2
III.	Test Results	7
	Summary of Test Results	7
	Nomenclature	11
	Equations	14
	Complete Results	16
IV.	Field Data	25
V.	Calibrations	37
	Filter Information	38
	Probe Heater Calibrations	39
	Meter Calibrations	40
	Orifice Calibrations	42
	Box Thermometer Calibrations	44
	Impinger Thermometer Calibrations	45
	Stack Temperature Calibrations	46
	Meter Temperature Calibrations	47
	Pitot Calibrations	48

Tables

1	Summary of Test Results, Front Half	8
2	Summary of Test Results, Back Half	9
3	Summary of Test Results, Combined	10

Figures

1	Stack Breeching Diagram & Sample Point Location	5
2	Particulate Sampling Train	6

Introduction

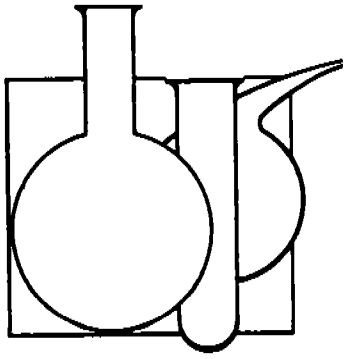

I. INTRODUCTION

On March 5, 1981, Guardian Systems, Inc., performed a series of three particulate emission determinations on the #1-A Stack which vents emissions from the #1 Coke Battery of ABC in Tarrant City, Alabama. E.P.A. Methods 1-5 were used to make the determinations on both the front and back half catches. Mr. Bill Warren of Alabama By Products supervised the plant operation during the tests. Mr. Rick Scarborough, Mr. Jim Denton and Mr. Michael Cusick of Guardian Systems, Inc. performed the tests.

Sampling & Analytical Procedures

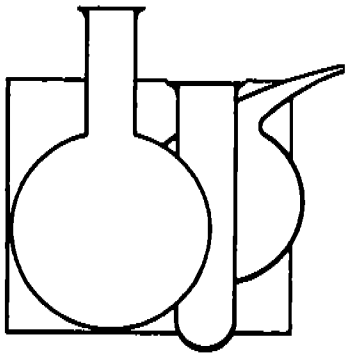

II. SAMPLING AND ANALYTICAL PROCEDURES

General

Stack temperature, pressure, range of velocity heads and moisture content were determined to correctly set the nomograph and proper nozzle size for isokinetic sampling. The meter box was leak checked form the pump through the orifice as outlined in Method 5. The equipment used in this test was manufactured by Research Appliance Corporation and was properly calibrated before and after the tests (See Calibrations).

The stack was sampled at 44 points (11 points on 4 Radii). The sample point location and stack breeching diagram can be found in Figure 1.

Sampling Techniques

The particulate determinations were made by utilizing the sampling train in Figure 2. Initial and leak checks of the sampling systems and pitot lines were performed as outlined in Method 5 and these were recorded on the data sheets. The nozzles were calibrated before and after each test using a micrometer and were also recorded on the data sheets.

The particulate samples were taken by sampling each point for 2 minutes. The gases were drawn through a heated 10 foot stainless steel lined probe. The probe heater was maintained at the proper setting to obtain an exit temperature of 248 $\pm$ 25 ^{o}F. (See Calibrations) The gases then passed through a glass cyclone for removing particulate matter approximately 10 microns and greater in size, then through a glass filter (Gelman, Class A) of 0.3 microns retention to remove any remaining particulate matter. The cyclone and filter were maintained at a temperature of

248 ± 25 °F. The sample box temperatures were recorded at each point on the data sheets.

The gases then passed through (4) Greensburg-Smith impingers. The first and second impingers contained 150 milliliters of distilled water each, while the third was empty and the fourth contained approximately 220 grams of indicating silica gel. These impingers were placed in an ice bath during the test to maintain a maximum exit temperature from the last impinger of 68 °F. This temperature is also recorded on the data sheets. The clean and cool gases then entered the meter box where the gas flow and temperature were measured (See data sheets).

Gas analysis for O_2 and CO_2 were taken during each test using Fyrite gas analyzers. Particulate catches were placed in sealed petri dishes. The acetone washes of the nozzle, probe and cyclone were combined and placed in sealed containers. For the series of tests an acetone blank of approximately 400 milliliters was placed in a sealed container. These containers were transported to the laboratory for analysis. In our laboratory, the back-half train, (everything between and including the back-half of the filter holder to the third impinger) was prepared for analysis by first measuring the volume of liquid in the first three impingers and then transferring the liquid to a sample container. All parts of the back-half were rinsed with distilled water and the rinsings were added to the same sample container.

Analysis - Front-Half

The Filters (Gelman, Class A, without organic binder,

minimum 99.9% retention for particles of 0.3 microns as determined by DOP tests) were prepared for the field test by desiccating at 68 $\pm$ 10 ^{o}F and ambient pressure for 24 hours and weighing at intervals of at least six (6) hours to a constant weight (less than 0.5 milligrams change from previous reading). Upon return to the laboratory, the filters were again subjected to the same procedures as outlined above. The weights are recorded in a bound laboratory book and were transferred to the laboratory sheets in this report. During each weighing the filter was not exposed to laboratory atmosphere for more than two (2) minutes and the relative humidity of the laboratory was less than fifty percent (50%).

The acetone washings, along with the acetone blank for the group of tests, were evaporated to dryness in tared glass beakers. They were then desiccated for twenty four (24) hours to a constant weight.

The moisture content was determined for each run by measuring the increase in the amount of water collected in the impingers and the increase in weight of the silica gel. These weights were combined to give the total amount of water collected.

Analysis - Back-Half

The water and water rinsings were evaporated and the residue weighed. These results are reported under the test results section.

STACK BREECHING DIAGRAM
AND SAMPLE POINT LOCATION
FOR
STACK 1-A

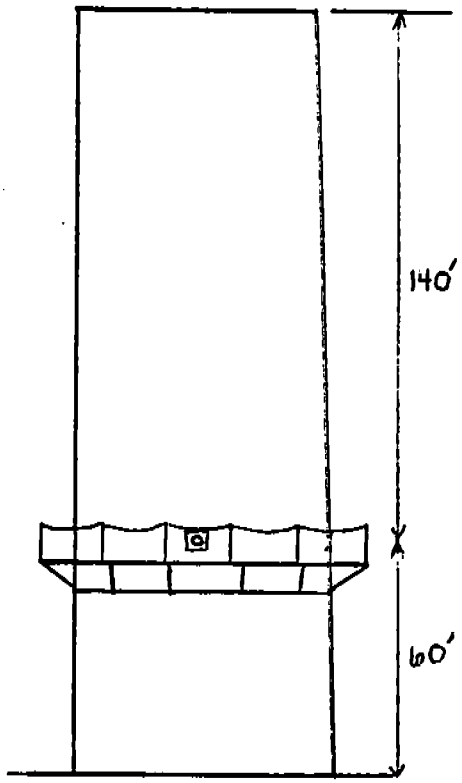

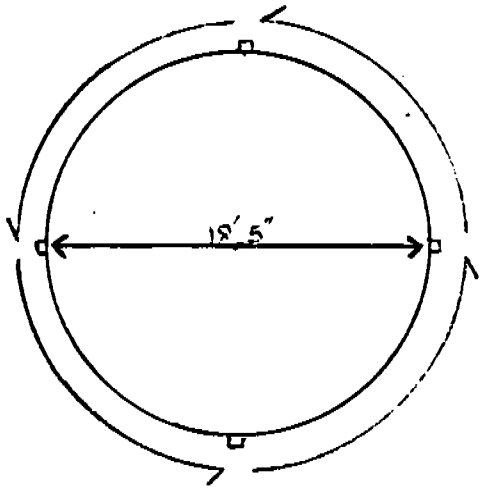

Sample Point	Inches from wall
1	2.5
2	7.8
3	13.4
4	19.3
5	25.6
6	32.4
7	39.8
8	48.2
9	57.8
10	69.7
11	86.9

Figure 1

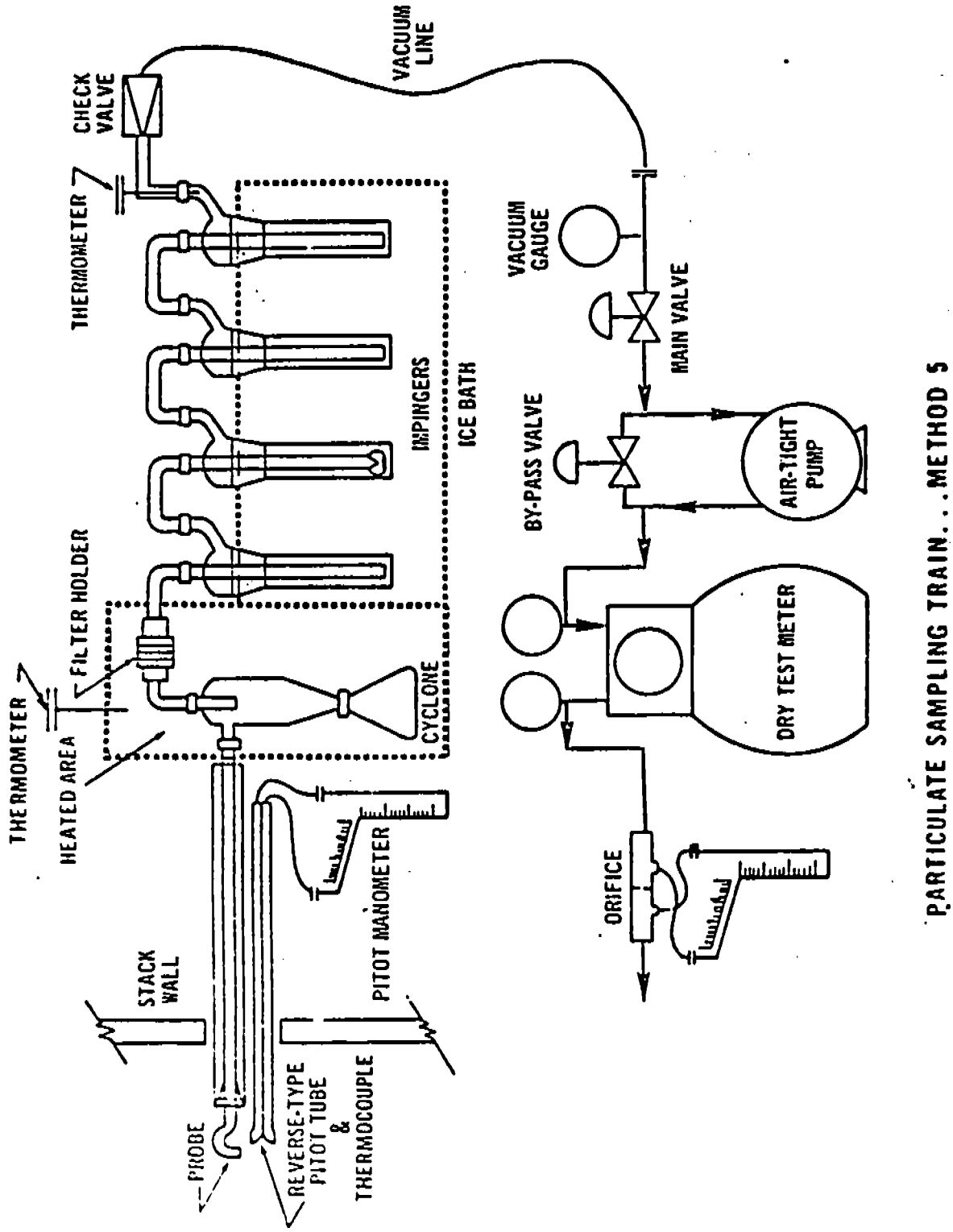
VACUUM LINE
CHECK VALVE
THERMOMETER
VACUUM GAUGE
MAIN VALVE
IMPINGERS
ICE BATH
BY-PASS VALVE
AIR-TIGHT PUMP
FILTER HOLDER
DRY TEST METER
THERMOMETER
HEATED AREA
CYCLONE
PITOT MANOMETER
ORIFICE
STACK WALL
PROBE
REVERSE-TYPE PITOT TUBE & THERMOCOUPLE
PARTICULATE SAMPLING TRAIN. . . METHOD 5

Figure 2

Test Results

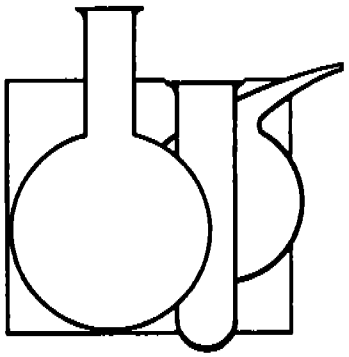

III. SUMMARY OF TEST RESULTS

Both the front and back half catches were analyzed and reported. Emission rates in pounds per hour are summarized below. Summary results are found in Table 1-3 with complete results immediately after.

Test #	1	2	3	Average
Front-Half	43.56	53.33	33.45	43.45
Back-Half	18.68	53.82	41.90	38.13
Combined	62.24	107.15	75.35	81.58

TABLE 1

SUMMARY OF FRONT HALF TEST RESULTS

Test Number	1	2	3
Date	3-5-81	3-5-81	3-5-81
Time	900-1130	1240-1448	1530-1700
Moisture, %	2.44	3.78	5.48
Gas Temperature, ^{o}F	393	404	405
Stack Velocity, f/s	18.23	17.50	16.56
Volumetric Flow, ACFM	291,411	279,731	264,677
Volumetric Flow, DSCFM	177,163	165,597	153,781
Concentration, Grains,ACF	0.017	0.022	0.015
Concentration, Grains, DSCF	0.029	0.038	0.025
Particulate Mass Rate, lbs/hr	43.56	53.33	33.45
% Isokinetic	93.43	97.31	97.37

TABLE 2

SUMMARY OF BACK HALF TEST RESULTS

Test Number	1	2	3
Date	3-5-81	3-5-81	3-5-81
Time	900-1130	1240-1448	1530-1700
Moisture, %	2.44	3.78	5.48
Gas Temperature, ^{o}F	393	404	405
Stack Velocity, f/s	18.23	17.50	16.56
Volumetric Flow, ACFM	291,411	279,731	264,677
Volumetric Flow, DSCFM	177,163	165,597	153,781
Concentration, Grains/ACF	0.008	0.022	0.018
Concentration, Grains, DSCF	0.012	0.038	0.032
Particulate Mass Rate, lbs/hr	18.68	53.82	41.90
% Isokinetic	93.43	97.31	97.37

TABLE 3

SUMMARY OF COMBINED TEST RESULTS

Test Number	1	2	3
Date	3-5-81	3-5-81	3-5-81
Time	900-1130	1240-1448	1530-1700
Moisture, %	2.44	3.78	5.48
Gas Temperature, ^{o}F	393	404	405
Stack Velocity, f/s	18.23	17.50	16.56
Volumetric Flow, ACFM	291,411	279,731	264,677
Volumetric Flow, DSCFM	177,163	165,597	153,781
Concentration, Grains/ACF	0.025	0.045	0.033
Concentration, Grains/DSCF	0.041	0.076	0.057
Particulate Mass Rate, lbs/hr	62.24	107.15	75.35
% Isokinetic	93.43	97.31	97.37

NOMENCLATURE

ACF - Actual Cubic Feet

ACFM - Actual Cubic Feet per minute

ACM - Actual Cubic Meters

ACMS - Actual Cubic Meters per second

An - Cross sectional area of nozzle, (ft^2)

As - Area of Stack, (ft^2)

Bws - Water vapor in the gas stream, proportion by volume (dimensionless)

Ca - Acetone blank residue concentration, mg/g

c_a - Particulate Concentration, ACF

CFM - Cubic feet per minute

Cp - Pitot tube coefficient, (dimensionless)

c_s - Particulate Concentration, grains/DSCF

Cso_2 - Concentration of sulfur dioxide (dry basis) corrected to standard conditions, lb/DSCF

C_{12} - Particulate concentration (c_s adjusted to 12% excess air), grains/DSCF

C_{50} - Particulate concentration (c_s adjusted to 50% excess air), grains/DSCF

DSCF - Dry Standard Cubic Feet

DSCFM - Dry Standard Cubic Feet per minute

DSCM - Dry Standard Cubic Meters

DSCMS - Dry Standard Cubic Meters per second

EA - Excess Air, %

I - Isokinetic Sampling, %

Km - Orifice Correction Factor, (dimensionless)

Kp - Pitot tube constant, 85.49 $\left[\frac{(lb/lb\text{-}mole)(in.\ Hg)}{(^{o}R)\ (in.\ H_2O)}\right]^{1/2}$

La - Maximum acceptable leakage rate for either a pretest leak check or for a leak check following a component change; equal to 0.02 CFM or 4 percent of the average sampling rate, whichever is less.

Li - Individual leakage rate observed during the leak check conducted prior to the "i^{th}" component change ($i = 1,2,3,...n$), CFM.

Lp - Leakage rate observed during the post test leak check, ft^3/min. (cfm).

Ma - Mass of residue of acetone after evaporation, mg.

Md - Molecular weight of stack gas; dry basis, lb/lb-mole.

Mn - Total amount of particulate matter collected, mg.

Ms - Molecular weight of stack gas; wet basis, lb/lb-mole.

Mw - Molecular weight of water, 18.0 g/g-mole (18.01 lb/lb-mole)

ΔP - Velocity head of stack gas, in. H_2O

Pa - Density of acetone, mg/ml

Pbar - Barometric pressure at the sampling site, in. Hg

Pg - Stack static pressure, in. H_2O

Pm - Meter pressure, in. Hg

PMR - Particulate Mass Rate, lbs per hour

Ps - Absolute stack pressure, in. Hg

Pstd - Standard absolute pressure, 29.92 in. Hg

Pw - Density of water, 0.9982 g/ml (0.002201 lb/ml)

Qa - Volumetric flow rate, ACFM

Qs - Volumetric flow rate, DSCFM

R - Ideal gas constant, 0.06236 mm Hg - $m^3/^oK$-g-mole (21.85 in. Hg-$ft^3/^oR$-lb-mole)

SCF - Standard Cubic Foot

ta - Ambient Temperature, ^oF

tm - Average Temperature of meter, ^oF

t_s - Average Temperature of stack, ^oF

NOMENCLATURE - continued

tstd - Standard Temperature, $68^{o}F$

NOTE: Capital "T" denotes degrees Rankin

Va - Volume of acetone blank, ml

Vaw - Volume of acetone used in wash, ml

Vlc - Total volume of liquid collected in condenser and silica gel, ml

Vm - Volume of gas sample, as measured by the dry gas meter, ACF

Vmc - Volume of gas sample, corrected for leak, ACF

Vm(std) - Volume of gas sample measured by the dry gas meter, corrected to standard conditions, DSCF

Vn - Volume collected at stack conditions through nozzle, ACF

Vs - Average stack gas velocity, ft/sec.

Vw(std) - Volume of water in the gas sample, corrected to standard conditions, SCF

Wa - Weight of residue in acetone wash, mg

Y - Dry gas meter calibration factor, (dimensionless)

ΔH - Average pressure differential across the calibrated orifice, in. H_2O

ΔH_a - Value of ΔH measured for a specific orifice when operated under the following conditions: 0.75 cfm of dry air (M.W. = 29) at $68^{o}F$, 29.92 in. Hg.

$\sqrt{\Delta P}$ - Average of the square roots of the velocity pressure, in. H_2O

Θ - Total sampling time, min.

Θ_1 - Sampling time interval from the beginning of a run until the first component change, min.

Θ_i - Sampling time interval between two successive component changes, beginning with the interval between the first and second changes, min.

Θp - Sampling time interval from the final (n^{th}) component change until the end of the sampling run, min.

$\%CO_2$, $\%O_2$, $\%N_2$, %CO - Number percent (%) by volume (dry basis) of each compound in the stack gas.

EQUATIONS

1. $P_s = P_{bar} + \frac{P_g}{13.6}$

2. $P_m = P_{bar} + \frac{\overline{\Delta H}}{13.6}$

3. $V_{m(std)} = V_m Y \left(\frac{Tstd}{Tm}\right) \left[\frac{Pbar + \frac{\overline{\Delta H}}{13.6}}{Pstd}\right]$

4. $V_w(std) = 0.04707\ V_{1c}$

5. $B_{ws} = \frac{V_{w(std)}}{V_{m(std)} + V_{w(std)}}$

6. $M_d = 0.44\ (\%CO_2) + 0.32\ (\%O_2) + 0.28\ (\%N_2 + \%CO)$

7. $M_s = M_d\ (1 - B_{ws}) + 18(B_{ws})$

8. $v_s = K_p C_p\ (\sqrt{\Delta p})\ avg. \sqrt{\frac{T_s}{M_s P_s}}$

9. $Q_a = (v_s)\ (A_s)\ (60)$

10. $Q_s = Q_a\ (1 - B_{ws}) \left(\frac{528}{T_s}\right) \left(\frac{P_s}{29.92}\right)$

11. $c_s = \left[0.0154\ (Mn/Vmstd)\right]$

12. $EA = \left[\frac{\%O_2 - 0.5\ \%CO}{0.264\ \%N_2\ (\%O_2 - 0.5\ \%CO)}\right] 100$

13. $c_{50} = \frac{c_s}{1 - \left[\frac{(1.5)(\%O_2) - 0.133(\%N_2) - 0.75\ (\%CO)}{21}\right]}$

14. $c_{12} = c_s \frac{12}{\%\ CO_2}$

15. $$PMR = (c_s)(Q_s)\left(\frac{60}{7000}\right)$$

16. $$V_n = \frac{T_s}{P_s}\left[(0.002669)(V_{1c}) + \frac{V_m}{T_m}\left(P_{bar} + \frac{\overline{\Delta H}}{13.6}\right)\right]$$

17. $$C_a = (0.0154)(M_n)\ /V_n$$

18. $$I = \frac{100\ V_n}{60\ \Theta\ v_s\ An}$$

19. $$V_{mc} = V_m - (L_p - L_a)\ \Theta$$

20. $$W_a = Ca\ Vaw\ p_a$$

. . . . . .

1. FRONT HALF

	Run Number
3-5-81	Date
30.20	Barometric Pressure (in. Hg.)
-.90	Static Pressure (in. H_2O)
88.00	Time (minutes)
41.569	Meter Volume (corrected)
393.00	Stack Temperature (^oF)
69.00	Meter Temperature (^oF)
.67	Meter Pressure (in. H_2O)
.257	Sq. Root Velocity Pressure
78.10	Mg of Particulate
22.30	Ml of water condensed
16.00	% O_2
4.00	% CO_2
266.386993	Stack Area (Ft^2)
.84	Pitot Correction Factor
.000767	Nozzle Area (Ft^2)

. . . . . .

1. Stack Pressure
   - 30.13 Inches Hg
   - 765.30 Millimeters Hg
2. Meter Pressure
   - 30.25 Inches Hg
   - 768.35 Millimeters Hg
3. Meter Volume
   - 41.930 Dry Standard Cubic Feet
   - 1.187 Dry Standard Cubic Meters
4. Water Volume
   - 1.050 Standard Cubic Feet
   - .030 Standard Cubic Meters
5. Moisture Content
   - .0244 (Convert to % X 100)
6. Molecular Weight Dry
   - 29.28
7. Molecular Weight Wet
   - 29.00
8. Stack Velocity
   - 18.23 Feet per Second
   - 5.56 Meters per Second
9. Volumetric Flow
   - 291,411. Actual Cubic Feet per Minute
   - 137.5314 Actual Cubic Meters per Second
10. Volumetric Flow
    - 177,163. Dry Standard Cubic Feet per Minute
    - 83.6121 Dry Standard Cubic Meters per Second
11. Concentration
    - .0287 Grains per Dry Standard Cubic Foot
    - .0657 Grams per Dry Standard Cubic Meter
15. Particulate Mass Rate
    - 43.56 Pounds per Hour
16. Volume at Nozzle
    - 68.971 Actual Cubic Feet
    - 1.953 Actual Cubic Meters
17. Concentration
    - .0174 Grains per Actual Cubic Foot
    - .0398 Grams per Actual Cubic Meter
18. % Isokinetic
    - 93.43

. . . . . .

. . . . . .

1. BACK HALF — Run Number

3-5-81 — Date

30.20	Barometric Pressure (in. Hg.)
-.90	Static Pressure (in. H_2O)
88.00	Time (minutes)
41.569	Meter Volume (corrected)
393.00	Stack Temperature (^oF)
69.00	Meter Temperature (^oF)
.67	Meter Pressure (in. H_2O)
.257	Sq. Root Velocity Pressure
33.50	Mg of Particulate
22.30	Ml of water condensed
16.00	% O_2
4.00	% CO_2
266.386993	Stack Area (Ft^2)
.84	Pitot Correction Factor
.000767	Nozzle Area (Ft^2)

. . . . . .

1. Stack Pressure
   - 30.13 Inches Hg
   - 765.30 Millimeters Hg
2. Meter Pressure
   - 30.25 Inches Hg
   - 768.35 Millimeters Hg
3. Meter Volume
   - 41.930 Dry Standard Cubic Feet
   - 1.187 Dry Standard Cubic Meters
4. Water Volume
   - 1.050 Standard Cubic Feet
   - .030 Standard Cubic Meters
5. Moisture Content
   - .0244 (Convert to % X 100)
6. Molecular Weight Dry
   - 29.28
7. Molecular Weight Wet
   - 29.00
8. Stack Velocity
   - 18.23 Feet per Second
   - 5.56 Meters per Second
9. Volumetric Flow
   - 291,411. Actual Cubic Feet per Minute
   - 137.5314 Actual Cubic Meters per Second
10. Volumetric Flow
    - 177,163. Dry Standard Cubic Feet per Minute
    - 83.6121 Dry Standard Cubic Meters per Second
11. Concentration
    - .0123 Grains per Dry Standard Cubic Foot
    - .0281 Grams per Dry Standard Cubic Meter
15. Particulate Mass Rate
    - 18.68 Pounds per Hour
16. Volume at Nozzle
    - 68.971 Actual Cubic Feet
    - 1.953 Actual Cubic Meters
17. Concentration
    - .0075 Grains per Actual Cubic Foot
    - .0172 Grams per Actual Cubic Meter
18. % Isokinetic
    - 93.43

. . . . . .

• • • • • • • • • • • • • •

1. Combined

3-5-81	Run Number
30.20	Date
-.90	Barometric Pressure (in. Hg.)
88.00	Static Pressure (in. H_2O)
41.569	Time (minutes)
393.00	Meter Volume (corrected)
69.00	Stack Temperature (^oF)
.67	Meter Temperature (^oF)
.257	Meter Pressure (in. H_2O)
111.60	Sq. Root Velocity Pressure
22.30	Mg of Particulate
16.00	Ml of water condensed
4.00	% O_2
266.386993	% CO_2
.84	Stack Area (Ft^2)
.000767	Pitot Correction Factor
	Nozzle Area (Ft^2)

• • • • • • • • • • • • • •

1. Stack Pressure

30.13	Inches Hg
765.30	Millimeters Hg

2. Meter Pressure

30.25	Inches Hg
768.35	Millimeters Hg

3. Meter Volume

41.930	Dry Standard Cubic Feet
1.187	Dry Standard Cubic Meters

4. Water Volume

1.050	Standard Cubic Feet
.030	Standard Cubic Meters

5. Moisture Content

.0244	(Convert to % X 100)

6. Molecular Weight Dry

29.28

7. Molecular Weight Wet

29.00

8. Stack Velocity

18.23	Feet per Second
5.56	Meters per Second

9. Volumetric Flow

291,411.	Actual Cubic Feet per Minute
137.5314	Actual Cubic Meters per Second

10. Volumetric Flow

177,163.	Dry Standard Cubic Feet per Minute
83.6121	Dry Standard Cubic Meters per Second

11. Concentration

.0410	Grains per Dry Standard Cubic Foot
.0938	Grams per Dry Standard Cubic Meter

15. Particulate Mass Rate

62.24	Pounds per Hour

16. Volume at Nozzle

68.971	Actual Cubic Feet
1.953	Actual Cubic Meters

17. Concentration

.0249	Grains per Actual Cubic Foot
.0570	Grams per Actual Cubic Meter

18. % Isokinetic

93.43

• • • • • • • • • • • • • •

. . . . . .

2. FRONT HALF

3-5-81	Run Number
30.20	Date
-.88	Barometric Pressure (in. Hg.)
88.00	Static Pressure (in. H_2O)
40.55	Time (minutes)
404.00	Meter Volume (corrected)
70.00	Stack Temperature (^oF)
.63	Meter Temperature (^oF)
.244	Meter Pressure (in. H_2O)
99.60	Sq. Root Velocity Pressure
34.10	Mg of Particulate
17.00	Ml of water condensed
3.00	% O_2
266.386993	% CO_2
.84	Stack Area (Ft^2)
.000767	Pitot Correction Factor
	Nozzle Area (Ft^2)

. . . . . .

1. Stack Pressure

30.14	Inches Hg
765.56	Millimeters Hg

2. Meter Pressure

30.25	Inches Hg
768.35	Millimeters Hg

3. Meter Volume

40.821	Dry Standard Cubic Feet
1.156	Dry Standard Cubic Meters

4. Water Volume

1.605	Standard Cubic Feet
.045	Standard Cubic Meters

5. Moisture Content

.0378	(Convert to % X 100)

6. Molecular Weight Dry

29.16

7. Molecular Weight Wet

28.74

8. Stack Velocity

17.50	Feet per Second
5.33	Meters per Second

9. Volumetric Flow

279,731.	Actual Cubic Feet per Minute
132.0190	Actual Cubic Meters per Second

10. Volumetric Flow

165,597.	Dry Standard Cubic Feet per Minute
78.1535	Dry Standard Cubic Meters per Second

11. Concentration

.0376	Grains per Dry Standard Cubic Foot
.0860	Grams per Dry Standard Cubic Meter

15. Particulate Mass Rate

53.33	Pounds per Hour

16. Volume at Nozzle

68.957	Actual Cubic Feet
1.953	Actual Cubic Meters

17. Concentration

.0222	Grains per Actual Cubic Foot
.0508	Grams per Actual Cubic Meter

18. % Isokinetic

97.31

. . . . . .

. . . . . .

2. BACK HALF

3-5-81	Run Number
30.20	Date
-.88	Barometric Pressure (in. Hg.)
88.00	Static Pressure (in. H_2O)
40.55	Time (minutes)
404.00	Meter Volume (corrected)
70.00	Stack Temperature (^oF)
.63	Meter Temperature (^oF)
.244	Meter Pressure (in. H_2O)
100.50	Sq. Root Velocity Pressure
34.10	Mg of Particulate
17.00	Ml of water condensed
3.00	% O_2
266.386993	% CO_2
.84	Stack Area (Ft^2)
.000767	Pitot Correction Factor
	Nozzle Area (Ft^2)

. . . . . .

1. Stack Pressure
   - 30.14 Inches Hg
   - 765.56 Millimeters Hg

2. Meter Pressure
   - 30.25 Inches Hg
   - 768.35 Millimeters Hg

3. Meter Volume
   - 40.821 Dry Standard Cubic Feet
   - 1.156 Dry Standard Cubic Meters

4. Water Volume
   - 1.605 Standard Cubic Feet
   - .045 Standard Cubic Meters

5. Moisture Content
   - .0378 (Convert to % X 100)

6. Molecular Weight Dry
   - 29.16

7. Molecular Weight Wet
   - 28.74

8. Stack Velocity
   - 17.50 Feet per Second
   - 5.33 Meters per Second

9. Volumetric Flow
   - 279,731. Actual Cubic Feet per Minute
   - 132.0190 Actual Cubic Meters per Second

10. Volumetric Flow
    - 165,597. Dry Standard Cubic Feet per Minute
    - 78.1535 Dry Standard Cubic Meters per Second

11. Concentration
    - .0379 Grains per Dry Standard Cubic Foot
    - .0867 Grams per Dry Standard Cubic Meter

15. Particulate Mass Rate
    - 53.82 Pounds per Hour

16. Volume at Nozzle
    - 68.957 Actual Cubic Feet
    - 1.953 Actual Cubic Meters

17. Concentration
    - .0224 Grains per Actual Cubic Foot
    - .0513 Grams per Actual Cubic Meter

18. % Isokinetic
    - 97.31

. . . . . .

• • • • • • • • • • • • • •

2. Combined

3-5-81	Run Number
30.20	Date
-.88	Barometric Pressure (in. Hg.)
88.00	Static Pressure (in. H_2O)
40.55	Time (minutes)
404.00	Meter Volume (corrected)
70.00	Stack Temperature (^oF)
.63	Meter Temperature (^oF)
.244	Meter Pressure (in. H_2O)
200.10	Sq. Root Velocity Pressure
34.10	Mg of Particulate
17.00	Ml of water condensed
3.00	% O_2
266.386993	% CO_2
.84	Stack Area (Ft^2)
.000767	Pitot Correction Factor
	Nozzle Area (Ft^2)

• • • • • • • • • • • • • •

1. Stack Pressure

30.14	Inches Hg
765.56	Millimeters Hg

2. Meter Pressure

30.25	Inches Hg
768.35	Millimeters Hg

3. Meter Volume

40.821	Dry Standard Cubic Feet
1.156	Dry Standard Cubic Meters

4. Water Volume

1.605	Standard Cubic Feet
.045	Standard Cubic Meters

5. Moisture Content

.0378	(Convert to % X 100)

6. Molecular Weight Dry

29.16

7. Molecular Weight Wet

28.74

8. Stack Velocity

17.50	Feet per Second
5.33	Meters per Second

9. Volumetric Flow

279,731.	Actual Cubic Feet per Minute
132.0190	Actual Cubic Meters per Second

10. Volumetric Flow

165,597.	Dry Standard Cubic Feet per Minute
78.1535	Dry Standard Cubic Meters per Second

11. Concentration

.0755	Grains per Dry Standard Cubic Foot
.1727	Grams per Dry Standard Cubic Meter

15. Particulate Mass Rate

107.15	Pounds per Hour

16. Volume at Nozzle

68.957	Actual Cubic Feet
1.953	Actual Cubic Meters

17. Concentration

.0447	Grains per Actual Cubic Foot
.1023	Grams per Actual Cubic Meter

18. % Isokinetic

97.31

• • • • • • • • • • • • • •

. . . . . .

3. FRONT HALF

3-5-81	Run Number
30.20	Date
-.79	Barometric Pressure (in. Hg.)
88.00	Static Pressure (in. H_2O)
37.119	Time (minutes)
405.00	Meter Volume (corrected)
62.00	Stack Temperature (^oF)
.54	Meter Temperature (^oF)
.23	Meter Pressure (in. H_2O)
62.50	Sq. Root Velocity Pressure
46.70	Mg of Particulate
17.00	Ml of water condensed
3.00	% O_2
266.386993	% CO_2
.84	Stack Area (Ft^2)
.000767	Pitot Correction Factor
	Nozzle Area (Ft^2)

. . . . . .

1. Stack Pressure

30.14	Inches Hg
765.56	Millimeters Hg

2. Meter Pressure

30.24	Inches Hg
768.10	Millimeters Hg

3. Meter Volume

37.932	Dry Standard Cubic Feet
1.074	Dry Standard Cubic Meters

4. Water Volume

2.198	Standard Cubic Feet
.062	Standard Cubic Meters

5. Moisture Content

.0548	(Convert to % X 100)

6. Molecular Weight Dry

29.16

7. Molecular Weight Wet

28.55

8. Stack Velocity

16.56	Feet per Second
5.05	Meters per Second

9. Volumetric Flow

264,677.	Actual Cubic Feet per Minute
124.9143	Actual Cubic Meters per Second

10. Volumetric Flow

153,781.	Dry Standard Cubic Feet per Minute
72.5769	Dry Standard Cubic Meters per Second

11. Concentration

.0254	Grains per Dry Standard Cubic Foot
.0581	Grams per Dry Standard Cubic Meter

15. Particulate Mass Rate

33.45	Pounds per Hour

16. Volume at Nozzle

65.286	Actual Cubic Feet
1.849	Actual Cubic Meters

17. Concentration

.0147	Grains per Actual Cubic Foot
.0336	Grams per Actual Cubic Meter

18. % Isokinetic

97.37

. . . . . .

. . . . . .

3. BACK HALF

3-5-81 Run Number

30.20 Date

-.79 Barometric Pressure (in. Hg.)

88.00 Static Pressure (in. H_2O)

37.119 Time (minutes)

405.00 Meter Volume (corrected)

62.00 Stack Temperature (^oF)

.54 Meter Temperature (^oF)

.23 Meter Pressure (in. H_2O)

78.30 Sq. Root Velocity Pressure

46.70 Mg of Particulate

17.00 Ml of water condensed

3.00 % O_2

266.386993 % CO_2

.84 Stack Area (Ft^2)

.000767 Pitot Correction Factor

Nozzle Area (Ft^2)

. . . . . .

1. Stack Pressure

30.14 Inches Hg

765.56 Millimeters Hg

2. Meter Pressure

30.24 Inches Hg

768.10 Millimeters Hg

3. Meter Volume

37.932 Dry Standard Cubic Feet

1.074 Dry Standard Cubic Meters

4. Water Volume

2.198 Standard Cubic Feet

.062 Standard Cubic Meters

5. Moisture Content

.0548 (Convert to % X 100)

6. Molecular Weight Dry

29.16

7. Molecular Weight Wet

28.55

8. Stack Velocity

16.56 Feet per Second

5.05 Meters per Second

9. Volumetric Flow

264,677. Actual Cubic Feet per Minute

124.9143 Actual Cubic Meters per Second

10. Volumetric Flow

153,781. Dry Standard Cubic Feet per Minute

72.5769 Dry Standard Cubic Meters per Second

11. Concentration

.0318 Grains per Dry Standard Cubic Foot

.0728 Grams per Dry Standard Cubic Meter

15. Particulate Mass Rate

41.90 Pounds per Hour

16. Volume at Nozzle

65.286 Actual Cubic Feet

1.849 Actual Cubic Meters

17. Concentration

.0185 Grains per Actual Cubic Foot

.0423 Grams per Actual Cubic Meter

18. % Isokinetic

97.37

. . . . . .

. . . . . .

3. COMBINED — Run Number

3-5-81 — Date

30.20 Barometric Pressure (in. Hg.)

-.79 Static Pressure (in. H_2O)

88.00 Time (minutes)

37.119 Meter Volume (corrected)

405.00 Stack Temperature (^oF)

62.00 Meter Temperature (^oF)

.54 Meter Pressure (in. H_2O)

.23 Sq. Root Velocity Pressure

140.80 Mg of Particulate

46.70 Ml of water condensed

17.00 % O_2

3.00 % CO_2

266.386993 Stack Area (Ft^2)

.84 Pitot Correction Factor

.000767 Nozzle Area (Ft^2)

. . . . . .

1. Stack Pressure

30.14 Inches Hg

765.56 Millimeters Hg

2. Meter Pressure

30.24 Inches Hg

768.10 Millimeters Hg

3. Meter Volume

37.932 Dry Standard Cubic Feet

1.074 Dry Standard Cubic Meters

4. Water Volume

2.198 Standard Cubic Feet

.062 Standard Cubic Meters

5. Moisture Content

.0548 (Convert to % X 100)

6. Molecular Weight Dry

29.16

7. Molecular Weight Wet

28.55

8. Stack Velocity

16.56 Feet per Second

5.05 Meters per Second

9. Volumetric Flow

264,677. Actual Cubic Feet per Minute

124.9143 Actual Cubic Meters per Second

10. Volumetric Flow

153,781. Dry Standard Cubic Feet per Minute

72.5769 Dry Standard Cubic Meters per Second

11. Concentration

.0572 Grains per Dry Standard Cubic Foot

.1309 Grams per Dry Standard Cubic Meter

15. Particulate Mass Rate

75.35 Pounds per Hour

16. Volume at Nozzle

65.286 Actual Cubic Feet

1.849 Actual Cubic Meters

17. Concentration

.0332 Grains per Actual Cubic Foot

.0760 Grams per Actual Cubic Meter

18. % Isokinetic

97.37

. . . . . .

Field Data

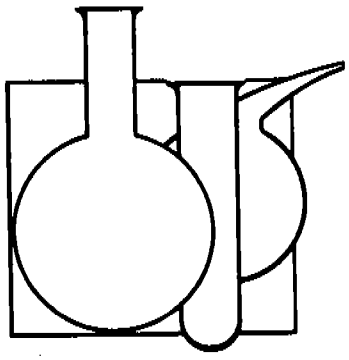

FIELD DATA SHEET

PLANT ABC

LOCATION Coke Oven #1-A

BARO. PRES. 30.20

RUN # 1

DATE 3/5/81

TIME 9:00 -

GUARDIAN SYSTEMS INCORPORAT
2610 - 19TH STREET SOUTH
BIRMINGHAM, ALABAMA 35209
TELEPHONE 205/879-1850

POINT NO.	TIME MIN	TIME DUR	METER VOL FT.3	STACK TEMP °F	METER TEMP. °F IN	OUT	AVG	IMP TEMP °F	BOX TEMP °F	METER PRESSURE "H_2O	VELOCITY PRESSURE "H_2O	Vacuum Pressure "Hg
Pt A		2	770.163									
1	2		771.0	397	58	58	58	48	230	.5	.05	1
2	4		771.9	387	62	58	60	48	245	.7	.07	2
3	6		772.8	391	64	58	61	48	245	.6	.06	2
4	8		773.7	397	64	58	61	48	245	.7	.07	2
5	10		774.6	396	68	58	63	50	245	.6	.06	2
6	12		775.6	403	68	58	63	50	245	.7	.07	2
7	14		776.5	402	70	58	64	50	245	.6	.06	2
8	16		777.3	394	70	58	64	50	245	.5	.05	1
9	18		778.1	340	70	60	65	50	245	.5	.05	1
10	20		778.9	325	70	60	65	50	240	.5	.05	1
11	22		779.7	320	70	60	65	50	240	.4	.04	1
Pt B											2.623	
1	24		780.6	414	66	62	64	50	230	.6	.06	1
2	26		781.6	423	68	62	65	50	230	.7	.07	2
3	28		782.5	386	72	64	68	50	235	.7	.07	2
4	30		783.5	388	74	64	69	50	240	.8	.08	2
5	32		784.6	392	74	64	69	52	240	.8	.08	2
6	34		785.6	395	74	64	69	52	245	.8	.08	2
7	36		786.6	398	76	66	71	52	245	.7	.07	2
8	38		787.6	402	78	66	72	52	245	.7	.07	2
9	40		788.5	403	78	66	72	52	245	.6	.06	1
10	42		789.3	402	80	66	73	54	245	.5	.05	1
11	44		790.1	385	80	66	73	54	240	.4	.04	1
											2.820	
			diff	avg			avg			avg		

STATIC PRESSURE "H -.9

PROBE TIP SIZE

BEFORE	AFTE
.375 .375	.375

WATER

ml. 17

gram 5.3

Total 22.3

~~FILTER NO.~~ operator Dunlap

SAMPLE BOX NO. CLD 5

METER BOX NO. 400

METER ΔH@ 1.78

PITOT, CP

TEMP. DEVICE omega

PROBE LGTH. 10'

PROBE LINER SS

PROBE HTR SET. 75

AMBIENT TEMP. 68

NOTES

Orifice - OK
pitot - OK
Leak check 10" Hg
770.163
- 770.155
.008

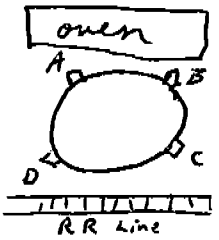

CO_2 - 4
O_2 - 16

FIELD DATA SHEET

GUARDIAN SYSTEMS INCORPORATED
2610 - 19TH STREET SOUTH
BIRMINGHAM, ALABAMA 35209
TELEPHONE 205/879-1850

PLANT: ABC
LOCATION: Coke Oven
BARO. PRES.:
RUN #: 1
DATE: 3/5/81
TIME: 11:30

POINT NO.	TIME MIN	TIME DUR	METER VOL FT.3	STACK TEMP °F	METER TEMP. °F IN	METER TEMP. °F OUT	METER TEMP. °F AVG	IMP TEMP °F	BOX TEMP °F	METER PRESSURE "H_2O	VELOCITY PRESSURE "H_2O	Vacuum Pressure "Hg
PtC		2										
1	46		791.2	425	70	68	69	48	230	1.0	.10	2
2	48		792.4	420	72	68	70	48	235	1.0	.10	2
3	50		793.5	388	74	68	71	50	240	.90	.09	2
4	52		794.5	394	78	70	74	50	240	.80	.08	2
5	54		795.5	397	78	70	74	50	245	.70	.07	2
6	56		796.5	402	78	70	74	52	245	.70	.07	2
7	58		797.4	404	80	70	74	52	245	.70	.07	2
8	60		798.3	407	80	70	74	52	245	.60	.06	1
9	62		799.2	411	78	68	72	52	240	.60	.06	1
10	64		800.1	385	78	68	72	52	240	.60	.06	1
11	66		801.1	380	76	68	71	52	240	.60	.06	1
PtD											2.989	
1	68		802.0	419	66	64	65	52	230	.60	.06	1
2	70		803.0	422	70	64	67	52	235	.90	.09	2
3	72		804.1	386	72	66	69	52	235	.80	.08	2
4	74		805.1	393	72	66	69	52	235	.80	.08	2
5	76		806.1	397	74	66	70	52	240	.70	.07	2
6	78		807.1	403	74	66	70	52	240	.80	.08	2
7	80		808.2	404	76	66	71	52	240	.80	.08	2
8	82		809.1	405	78	68	73	52	240	.70	.07	2
9	84		810.0	377	78	68	73	54	240	.60	.06	2
10	86		810.9	354	78	68	73	54	240	.50	.05	1
11	88		811.732	363	78	68	73	54	235	.50	.05	1
											2.858 (11.87)	
44	88		41.562	393			69			0.67	~~.264~~	
											.257	

STATIC PRESSURE "H_2

PROBE TIP SIZE

BEFORE	AFTER
.375 .375 .375	.375 .375 .375

WATER

ml.

gram

Total

~~FILTER NO.~~ operator: Denton

SAMPLE BOX NO.
METER BOX NO. 400
METER ΔH@ 1.77
PITOT, CP
TEMP. DEVICE ~~Omega~~
PROBE LGTH. 10'
PROBE LINER SS
PROBE HTR SET. 15
AMBIENT TEMP. 68

Final NOTES
pitot - leak check
811.868
− 811.855
.013

GUARDIAN SYSTEMS INC.
2809 Central Avenue
Birmingham, Alabama 35209
205/879-1850

Run Number 1

Date 3-5-81

Location ABC STACK #1-A

Amount liquid lost during transport NONE

Acetone blank volume, ml ~~145~~ 400

Acetone wash volume, ml ~~400~~ 145

Acetone blank concentration, mg/mg 6.37 x 10-7

Acetone wash blank, mg .2

Filter Collections (mg)		Probe and Cyclone Wash (mg)	
Filter #	045	Dish #	10
Gross	264.2	Gross	1495 86.5
Tare	249.8	Tare	1495 22.7
Net	14.4	Acetone Blank	-.1
		Net	63.7

Total Particulate Capture 78.1 mg.

Water		Silica Gel	
Final	317	Final	265.2
Initial	300	Initial	259.9
Net	17	Net	5.3

Total Water 22.3

Approved By [signature]

GUARDIAN SYSTEMS INC.
2809 Central Avenue
Birmingham, Alabama 35209
205/879-1850

BACK HALF
WATER

Run Number 1

Date 3-5-81

Location ABC STACK #1-A

Amount liquid lost during transport NONE

Acetone blank volume, ml 200

Acetone wash volume, ml 317

Acetone blank concentration, mg/mg

Acetone wash blank, mg .2

Filter Collections (mg)

Filter # _____

Gross _____

Tare _____

Net _____

Probe and Cyclone Wash (mg)

Dish # 11

Gross 85196.7

Tare 85162.9

Acetone Blank -.3

Net 33.5 mg.

Total Particulate Capture 33.5

Water

Final _____

Initial _____

Net _____

Total Water _____

Silica Gel

Final _____

Initial _____

Net _____

Approved By [signature]

GUARDIAN SYSTEMS

FIELD DATA SHEET

PLANT ABC

LOCATION Coke Oven #1-A

BARO. PRES. 30.20

RUN # 2

DATE 3/5/81

TIME 2:48 pm

GUARDIAN SYSTEMS INCORPORATED
2610 - 19TH STREET SOUTH
BIRMINGHAM, ALABAMA 35209
TELEPHONE 205/879-1850

POINT NO.	TIME MIN	TIME DUR	METER VOL FT. 3	STACK TEMP °F	METER TEMP. °F IN	OUT	AVG	IMP TEMP °F	BOX TEMP °F	METER PRESSURE "H_2O	VELOCITY PRESSURE "H_2O	Vacuum Pressure "Hg
~~out B~~		2										
1	46		832.0	430	66	64	65	54	240	.50	.05	1
2	48		832.9	422	68	66	67	54	240	.70	.07	2
3	50		833.9	419	70	64	67	54	240	.70	.07	2
4	52		834.9	418	70	64	67	56	240	.80	.08	2
5	54		836.0	386	70	64	67	48	240	.80	.08	2
6	56		836.9	387	70	64	67	48	245	.70	.07	2
7	58		838.0	392	70	64	67	48	240	.80	.08	2
8	60		839.0	394	74	64	69	50	240	.80	.08	2
9	62		839.9	380	74	64	69	50	240	.60	.06	1
10	64		840.8	386	74	64	69	50	240	.60	.06	1
11	66		841.6	375	74	64	69	50	235	.50	.05	1
out C												
1	68		842.5	403	68	64	66	50	235	.70	.07	1
2	70		843.5	410	70	66	68	50	235	.70	.07	1
3	72		844.5	401	74	66	70	50	230	.80	.08	1
4	74		845.6	417	74	66	70	50	230	.70	.07	1
5	76		846.6	421	76	68	72	50	230	.80	.08	1
6	78		847.6	423	78	68	73	52	235	.90	.09	1
7	80		848.8	423	78	68	73	52	235	.70	.07	1
8	82		849.7	386	78	68	73	52	235	.70	.07	1
9	84		850.7	391	78	68	73	52	240	.80	.08	1
10	86		851.7	395	78	68	73	52	240	.70	.07	1
11	88		852.680	398	78	68	73	54	235	.60	.06	
											10.731	
			40.550	404			70			0.63		

STATIC PRESSURE "H: -.82

PROBE TIP SIZE

BEFORE .375 .375 .375 .375 | AFTE .375 .375 .375 .375

WATER

ml. 27

gram 7.1

Total 34.1

~~FILTER NO.~~

Operator Denton

SAMPLE BOX NO. 5

METER BOX NO. 420

METER ΔH@ 1.73

PITOT, CP .84

TEMP. DEVICE

PROBE LGTH. 10'

PROBE LINER SS

PROBE HTR SET. 30

AMBIENT TEMP. 50

Final NOTES

pitot - ok

leak check

Vac 10" Hg

652.738
- 652.725
.013

CO_2 - 3.5

O_2 - 17

10.

FIELD DATA SHEET

PLANT ABC

LOCATION Cope Oven

BARO. PRES.

RUN # 2

DATE 3/5/81

TIME 12:40

GUARDIAN SYSTEMS INCORPORATED
2610 - 19TH STREET SOUTH
BIRMINGHAM, ALABAMA 35209
TELEPHONE 205/879-1850

POINT NO.	TIME MIN	TIME DUR	METER VOL FT.3	STACK TEMP °F	METER TEMP. °F IN	METER TEMP. °F OUT	METER TEMP. °F AVG	IMP TEMP °F	BOX TEMP °F	METER PRESSURE "H_2O	VELOCITY PRESSURE "H_2O	Vacuum Pressure "Hg
Port A		2	812.080									
1	2		812.9	415	70	68	69	52	230	.50	.05	1
2	4		813.6	424	72	70	71	52	235	.40	.04	1
3	6		814.5	390	74	70	72	52	240	.60	.06	1
4	8		815.5	396	74	70	72	52	240	.70	.07	1
5	10		816.5	401	74	68	71	52	240	.70	.07	1
6	12		817.3	390	74	68	71	52	240	.50	.05	1
7	14		818.3	406	74	68	71	52	240	.70	.07	1
8	16		819.2	409	74	70	72	52	245	.60	.06	1
9	18		820.1	412	74	70	72	54	245	.60	.06	1
10	20		820.9	415	74	68	71	54	240	.50	.05	1
11	22		821.6	415	74	68	71	54	240	.40	.04	1
Port D												
1	24		822.6	416	68	64	66	54	240	.70	.07	2
2	26		823.7	416	74	68	71	54	240	1.0	.10	2
3	28		824.8	420	76	68	72	54	240	.80	.08	2
4	30		825.6	423	76	68	72	54	245	.50	.05	1
5	32		826.4	426	78	68	73	54	245	.40	.04	1
6	34		827.2	389	78	68	73	54	240	.50	.05	1
7	36		828.0	394	78	68	73	54	240	.50	.05	1
8	38		828.9	395	78	68	73	54	240	.40	.04	1
9	40		829.6	377	76	68	72	54	240	.40	.04	1
10	42		830.4	399	76	68	72	54	240	.40	.04	1
11	44		831.1	396	76	68	72	54	240	.40	.04	1

STATIC PRESSURE "H_2O

PROBE TIP SIZE

BEFORE: .375 .375 .375 | AFTER: .375 .375 .375

WATER

ml.

gram

Total

FILTER NO.

operator Denton

SAMPLE BOX NO.

METER BOX NO.

METER ΔH@

PITOT, CP

TEMP. DEVICE

PROBE LGTH.

PROBE LINER

PROBE HTR SET.

AMBIENT TEMP.

NOTES

pitot - ok
leak check
vac 0" Hg

812.080
- 812.070
.010

GUARDIAN SYSTEMS INC.
2809 Central Avenue
Birmingham, Alabama 35209
205/879-1850

Run Number 2

Date 3-5-81

Location ABC STACK #1-A

Amount liquid lost during transport NONE

Acetone blank volume, ml 400

Acetone wash volume, ml 95

Acetone blank concentration, mg/mg 6.37 x 10^-7

Acetone wash blank, mg .2

Filter Collections (mg)		Probe and Cyclone Wash (mg)	
Filter #	R-21	Dish #	13
Gross	255.6	Gross	142 012.7
Tare	251.0	Tare	141 957.7
Net	44.6	Acetone Blank	—
		Net	55.0

Total Particulate Capture 99.6 mg.

Water		Silica Gel	
Final	327	Final	253.3
Initial	300	Initial	246.2
Net	27	Net	7.1

Total Water 34.1

Approved By [signature]

GUARDIAN SYSTEMS INC.
2809 Central Avenue
Birmingham, Alabama 35209
205/879-1850

BACK HALF
WATER

Run Number 2

Date 3-5-81

Location ABC STACK #1-A

Amount liquid lost during transport NONE

Acetone blank volume, ml 200

Acetone wash volume, ml 327

Acetone blank concentration, mg/mg —

Acetone wash blank, mg .2

Filter Collections (mg)		Probe and Cyclone Wash (mg)	
Filter #		Dish #	C
Gross		Gross	78 925.4
Tare		Tare	78 825.6
Net		Acetone Blank	-.3
		Net	100.5

Total Particulate Capture 100.5 mg.

Water		Silica Gel	
Final		Final	
Initial		Initial	
Net		Net	

Total Water

Approved By

FIELD DATA SHEET

PLANT ABC Tarrant

LOCATION Coke Oven #1-A

BARO. PRES. 30.20

RUN # 3

DATE 3/5/81

TIME 3:30

GUARDIAN SYSTEMS INCORPORATED
2610 - 19TH STREET SOUTH
BIRMINGHAM, ALABAMA 35209
TELEPHONE 205/879-1850

POINT NO.	TIME MIN	TIME DUR	METER VOL FT. 3	STACK TEMP °F	METER TEMP. °F IN	OUT	AVG	IMP TEMP °F	BOX TEMP °F	METER PRESSURE "H_2O	VELOCITY PRESSURE "H_2O	Vacuum Pressure "Hg
Pitot	0	2	852.987									
1	2		853.4	406	64	62	63	50	225	.50	.05	1
2	4		854.3	384	68	62	65	48	235	.50	.05	1
3	6		855.2	391	70	64	67	46	240	.70	.07	1
4	8		856.1	395	72	64	68	46	240	.50	.05	1
5	10		857.0	398	72	66	69	46	235	.60	.06	1
6	12		857.7	402	72	66	69	46	235	.40	.04	1
7	14		858.8	405	72	66	69	48	230	.90	.09	1
8	16		859.7	410	74	66	70	48	230	.70	.07	1
9	18		860.8	413	74	66	70	48	230	.80	.08	1
10	20		861.7	417	72	66	69	50	225	.70	.07	1
11	22		862.6	420	72	66	69	50	225	.60	.06	1
Pitot A												
1	24		863.6	388	70	66	68	50	225	.70	.07	1
2	26		864.5	393	72	66	69	50	230	.50	.05	1
3	28		865.3	397	72	66	69	52	235	.50	.05	1
4	30		866.2	401	74	66	70	50	240	.60	.06	1
5	32		867.1	404	76	66	71	48	240	.70	.07	1
6	34		867.9	407	76	66	71	48	235	.50	.05	1
7	36		868.7	411	76	66	71	48	235	.40	.04	1
8	38		869.5	416	76	66	71	50	230	.50	.05	1
9	40		870.3	420	76	68	72	50	230	.40	.04	1
10	42		871.0	421	74	68	71	50	240	.40	.04	1
11	44		872.0	~~389~~	72	68	70	52	240	.70	.07	1

STATIC PRESSURE "H: -.79

PROBE TIP SIZE

BEFORE .375 .375 .375 AFTE .375 .375 .375

WATER

ml.

gram

Total

FILTER NO.

SAMPLE BOX NO. 056

METER BOX NO. 400

METER ΔH@ 1.78

PITOT, CP .84

TEMP. DEVICE Omega

PROBE LGTH. 10'

PROBE LINER SS

PROBE HTR SET. 80%

AMBIENT TEMP. 55

NOTES

Pitot 7"

Bad @ 10:13

852.957
852.970
.013

CO_2 3%

O_2 17%

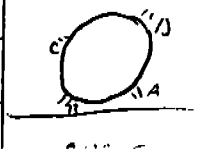

FIELD DATA SHEET

PLANT ABC

LOCATION Coke Oven

RUN # 3

DATE 3/5/81

BARO. PRES.

TIME

GUARDIAN SYSTEMS INCORPORATED
2610 - 19TH STREET SOUTH
BIRMINGHAM, ALABAMA 35209
TELEPHONE 205/879-1850

POINT NO.	TIME MIN	TIME DUR	METER VOL FT. 3	STACK TEMP °F	METER TEMP. °F IN	OUT	AVG	IMP TEMP °F	BOX TEMP °F	METER PRESSURE "H_2O	VELOCITY PRESSURE "H_2O	Vacuum Pressure "Hg
Pitot		2										
1	46		872.7	400	70	66	68	48	225	.40	.04	1
2	48		873.5	403	72	66	69	48	230	.40	.04	1
3	50		874.3	408	72	66	69	48	235	.50	.05	1
4	52		875.1	412	72	66	69	45	230	.50	.05	1
5	54		875.8	416	72	66	69	45	230	.40	.04	2
6	56		876.5	424	72	68	70	45	230	.40	.04	2
7	58		877.4	423	72	68	70	50	235	.50	.05	2
8	60		878.3	390	72	68	70	50	235	.60	.06	2
9	62		879.1	394	74	68	71	50	235	.50	.05	2
10	64		879.9	398	74	68	71	50	240	.40	.04	2
11	66		880.7	402	74	68	71	50	240	.50	.05	2
Pitot												
1	68		881.6	407	74	68	71	48	225	.50	.05	2
2	70		882.3	410	74	68	71	46	230	.40	.04	2
3	72		883.2	412	74	68	71	46	230	.60	.06	2
4	74		884.2	419	74	68	71	46	230	.70	.07	2
5	76		885.2	421	74	68	71	46	230	.70	.07	2
6	78		886.0	381	72	68	70	46	235	.50	.05	2
7	80		886.9	390	72	68	70	46	235	.50	.05	2
8	82		887.6	394	72	68	70	46	230	.40	.04	2
9	84		888.3	399	72	68	70	46	230	.30	.03	1
10	86		889.2	402	72	68	70	48	230	.60	.06	2
11	88		890.106	407	72	68	70	48	230	.60	.06	2
			37.119 ✓	405 ✓			69			.54 ✓	.930	

STATIC PRESSURE "H — .79

PROBE TIP SIZE

BEFORE AFTE

WATER

ml. 40

gram 6.7

Total 46.7

~~METER~~ NO.

Scarborough

SAMPLE BOX NO.

METER BOX NO.

METER ΔH@

PITOT, CP

TEMP. DEVICE

PROBE LGTH.

PROBE LINER

PROBE HTR SET.

AMBIENT TEMP.

NOTES

Pitot 7'

leak @ 10'

890.121
890.110
.011

GUARDIAN SYSTEMS INC.
2809 Central Avenue
Birmingham, Alabama 35209
205/879-1850

Run Number 3

Date 3-5-81

Location ARC Stack # 1-A

Amount liquid lost during transport None

Acetone blank volume, ml 400

Acetone wash volume, ml 131

Acetone blank concentration, mg/mg 6.37X10-7

Acetone wash blank, mg .2

Filter Collections (mg)		Probe and Cyclone Wash (mg)	
Filter #	R-20	Dish #	5
Gross	290.4	Gross	146,748.7
Tare	249.7	Tare	146,726.8
Net	40.7	Acetone Blank	-.1
		Net	21.8

Total Particulate Capture 62.5 mg.

Water		Silica Gel	
Final	340	Final	274.9
Initial	300	Initial	268.2
Net	40	Net	6.7

Total Water 46.7

Approved By [signature]

GUARDIAN SYSTEMS INC.
2809 Central Avenue
Birmingham, Alabama 35209
205/879-1850

BACK HALF
WATER

Run Number 3

Date 3-5-81

Location ABC STACK # 1-A

Amount liquid lost during transport NONE

Acetone blank volume, ml 200

Acetone wash volume, ml 340

Acetone blank concentration, mg/mg —

Acetone wash blank, mg .2

Filter Collections (mg)		Probe and Cyclone Wash (mg)	
Filter #		Dish #	7
Gross		Gross	80 739.2
Tare		Tare	80 660.6
Net		Acetone Blank	-.3
		Net	78.3

Total Particulate Capture 78.3 mg.

Water		Silica Gel	
Final		Final	
Initial		Initial	
Net		Net	

Total Water

Approved By

Calibrations

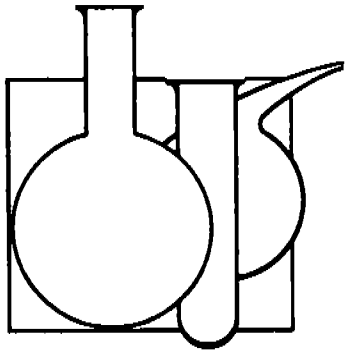

VI. CALIBRATIONS

General

The meter box was recalibrated upon return to the laboratory from this test. Using the average meter pressure, the box was calibrated at the closest point (for an average meter pressure of 0.61 a 0.50 "H_2O was used at the calibration point). These calibrations produced a single point of MCF and Δ H@ which was compared to the original calibration. All were within the 5% allowed at the highest vacuum seen. This new MCF was applied against all meter volumes in these tests. These calibration sheets are located behind the original calibration sheets.

The equipment used was as follows:

Probe: 0'-2

Box: 400

Stack Temperature: OMEGA

Sample Box: OLD 5&6

The average temperature of the stack was 401 ^{o}F. The L&N #1 was recalibrated at 400 ^{o}F and agreed within 1.5% of the initial calibration value.

Type A
Glass Fiber Filters

FEATURES

• High tensile strength. • Excellent handling characteristics. • Good wetting properties. • Minimum of 99.9% retention for particles of .3 μm as determined by DOP tests. • Binder free.

This is the original glass fiber filter pioneered by Gelman Instrument Company over 15 years ago. It continues to be widely used for high volume sampling. Since zinc is one of the raw materials incorporated in the glass fibers, Type A Filters have a variable zinc content. Another component of the filter, sulfuric acid, is used as a dispersion medium, making the sheets unsuitable for measurement of sulfates.

Type A Glass Fiber Filters are less likely to develop static charge or tear than other glass fiber media types. They are used extensively in applications where zinc and iron content is not important, or where sulfate content is not being determined.

Size	37 mm	47 mm	102 mm	8"x10"
Product No.	61715	61694	61696	61701
Filters/Pkg.	500	100	100	100

TYPE A GLASS FIBER FILTER SPECIFICATION REPORT

The following physicochemical properties represent typical, average values obtained in accordance with accepted test methods. They are subject to normal manufacturing variations and are supplied as a technical service. *The analysis has been made in accordance with EPA procedures (micrograms/8" x 10" sheet).*

ELEMENTS:

Antimony	30	Manganese	200
Arsenic	30	Mercury	100
Beryllium	1	Molybdenum	10
Bismuth	10	Nickel	10
Cadmium	5	Selenium	5000
Chromium	10	Tin	10
Cobalt	10	Titanium	170
Copper	2	Vanadium	10
Iron	2300	Zinc	5000 to 25,000
Lead	20		

OTHER PHYSICALS:

BSO	522	Flow Resistance (Max.) @ 320 cm/min.	80 mm
*pH	8.5	Flow Rate (air) lpm/cm² @ 70 cm Hg	50
DOP @320/cm/min (ASTM Method 2986)	99.9%	Max. Use Temp	400°C
Tensile Strength (Fed Spec UUP31B)	750 gr	Static Properties	Low
Weight, 8"x10" sheet	4.0±.3 gr.	Ability to Fold	Excellent

WATER EXTRACTABLE IONS

Sulfate	100	Chloride	1500
Nitrate	50	Fluoride	15
Ammonia	20		

*(Gelman Procedure)

A. Soak in distilled water
B. Add 15 drops saturated KCl solution
C. Shake one 8"x10" sheet and soak in prepared water for one hour
D. Run pH at ambient temperature

Type A/E
Glass Fiber Filters

FEATURES

• Low trace metals. • Medium Handling characteristics. • Available in all sizes. • Minimum of 99.9% retention for particles of .3 μm as determined by DOP tests. • Binder free.

Type A/E Glass Fiber Filters are composed of low acid soluble glass fiber. They contain low levels of both zinc and iron. The filters do react with atmospheric sulfur dioxide; and therefore, when high levels of sulfur are expected, correct [illegible] this reaction should be accounted for.

Type A/E Glass Fiber Filters are binder free and ideal for gravimetric analysis of air pollutants. This pure, organic free filter is the basis for procedures widely used in determining municipal and industrial air polluting substances.

Size	25 mm	37 mm	47 mm	102 mm	8"x10"
Product No.	61630	61652	61631	61633	61638
Filters/Pkg.	500	500	100	100	100

TYPE A/E GLASS FIBER FILTER SPECIFICATION REPORT

The following physicochemical properties represent typical, average values obtained in accordance with accepted test methods. They are subject to normal manufacturing variations and are supplied as a technical service. *The analysis has been made in accordance with EPA procedures (micrograms 8" x 10" sheet).*

ELEMENTS:

Antimony	20	Manganese	2
Arsenic	20	Mercury	80
Beryllium	1	Molybdenum	10
Bismuth	10	Nickel	10
Cadmium	2	Selenium	200
Chromium	10	Tin	10
Cobalt	10	Titanium	10
Copper	2	Vanadium	10
Iron	100-1800	Zinc	90
Lead	10		

OTHER PHYSICALS:

BSO	522	Flow Resistance (Max.) @ 320 cm/min.	60 mm
*pH	9.0	Flow Rate (air) lpm/cm² @ 70 cm Hg	60
DOP @320/cm/min ASTM Methods 2986)	99.9%	Max. Use Temp.	400 C
Tensile Strength (Fed Spec UUP31B)	600 gr.	Static Properties	Medium
Weight 8"x10" sheet	4.0±.3 gr.	Ability to Fold	Good

WATER EXTRACTABLE IONS:

Sulfate	600	Chloride	1500
Nitrate	115	Fluoride	87
Ammonia	13		

*pH- Gelman Procedure

A. Soak in distilled water
B. Add 15 drops saturated KCl solution
C. Shake one 8"x10" sheet and soak in prepared water for one hour
D. Run pH at ambient temperature

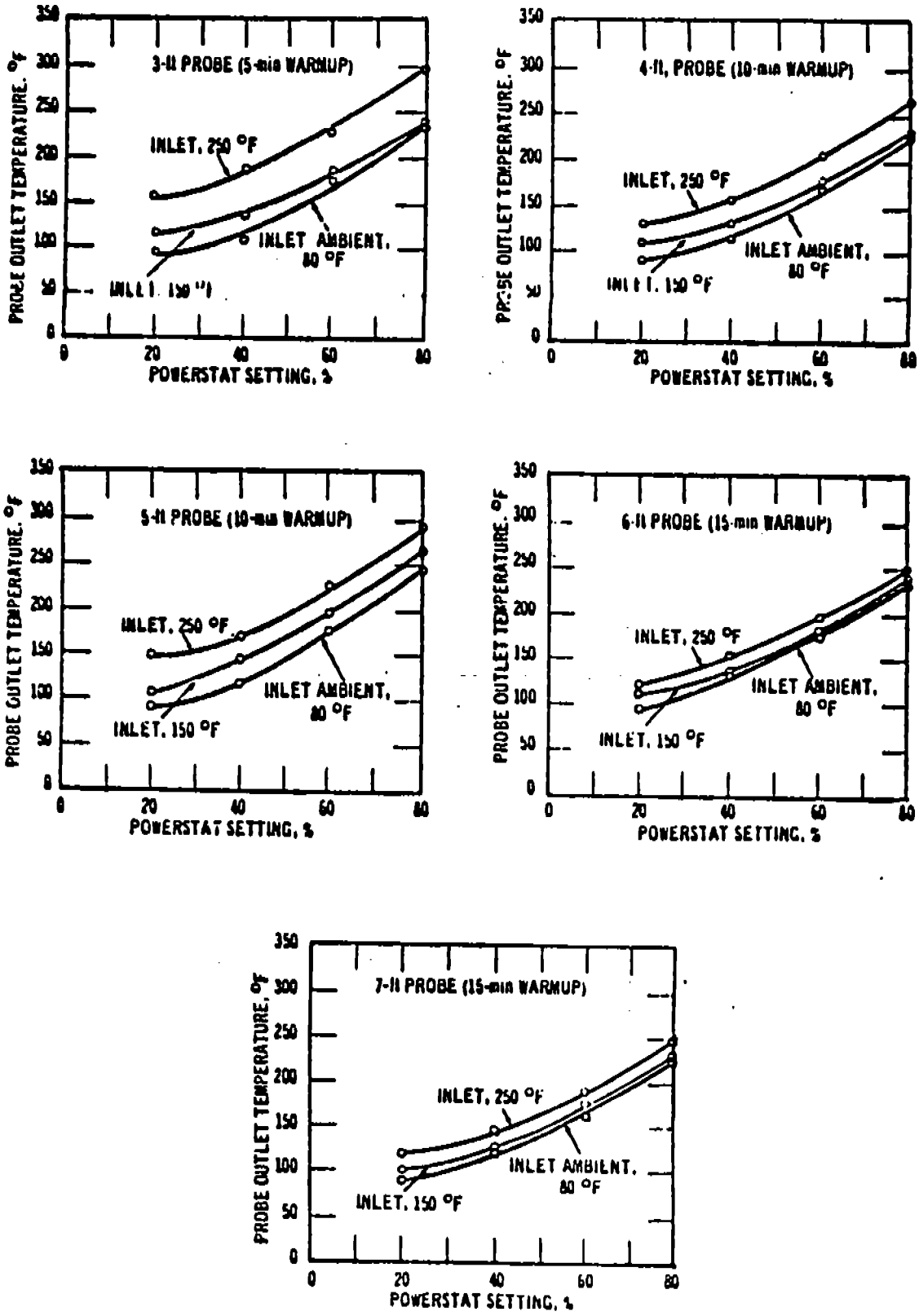

NOTE: Flow rate held constant at 0.75; 50% change in flow rate has little effect on probe temperature.

Figure 16

Probe Temperatures

METER CALIBRATION FORM

Date 12/30/80 Box No. 400

P_{bar} = 30.18 in. Hg Calibrated by Jim Denton

ns min)	Orifice Manometer Setting ΔH (in. H_2O)	Δ wtm (in. H_2O)	Gas Volume Wet Test Meter Initial	Gas Volume Wet Test Meter Final	Gas Volume Dry Gas Meter Initial	Gas Volume Dry Gas Meter Final	Temperature Wet Test Meter Initial	Temperature Wet Test Meter Final	Avg. Temp. Dry Gas Meter Inlet	Avg. Temp. Dry Gas Meter Outlet
5	.5 Vac 10" Hg	-.40	868.582	874.663	546.210	552.238	18.4	18.4	76/92	70/74
5	1.0 10"	-.60	875.424	883.918	552.729	561.276	18.4	18.4	88/100	76/82
15	1.5 10"	-.70	884.776	894.890	561.772	572.224	18.4	18.3	96/108	82/86
5	2.0 10"	-.90	895.436	907.325	572.522	584.653	18.3	18.3	100/106	86/90
5	2.5 10"	-1.15	907.932	921.240	585.277	599.072	18.3	18.2	102/108	90/92

Pump must be operated for at least 15 minutes at each ΔH setting (.5, 1, 1.5, 2 and 3)

T_{dgm} = average temperature of dry gas meter (inlet and outlet) + 460°F

T_{wtm} = average temperature of wet test meter + 460°F

$$P_{wtm} = P_{bar} - \frac{\Delta wtm}{13.6}$$

$$P_{dgm} = P_{bar} + \frac{\Delta H}{13.6}$$

Δwtm = pressure on wet test meter in inches of H_2O

Y = meter calibration factor

28.316 =conversion factor when using a wet test meter calibrated in liters

Calculations

$$Y = \frac{(\text{wet final} - \text{wet initial})(T_{dgm})(P_{wtm})}{(\text{dry final} - \text{dry initial})(28.316 \text{ or } (1))(T_{wtm})(P_{dgm})}$$

$$\overline{Y} = \frac{\Sigma Y}{5}$$

Meter Tolerance = 1.00 ± 0.01

If the meter calibration factor is not within the allowable tolerance, the calibration factory Y may be used to mathematically correct the gas meter dial readings to the proper values instead of physically adjusting the dry gas meter dials to correspond to the wet test meter readings.

METER CALIBRATION FORM

Date 3/18/81 Box No. 400

P_{bar} = 29.90 in. Hg Calibrated by LOTZ

Orifice Manometer Setting ΔH (in. H_2O)	Δ wtm (in. H_2O)	Gas Volume Wet Test Meter		Gas Volume Dry Gas Meter		Temperature Wet Test Meter		Avg. Temp. Dry Gas Meter	
		Initial	Final	Initial	Final	Initial	Final	Inlet	Outlet
.5 @ 10" Hg	-0.40	619.006	625.188	522.597	528.798	16.5	16.5	72/84	66/72
.5 @ 10" Hg	-0.40	625.188	631.290	528.798	535.032	16.5	16.5	84/90	72/78
.5 @ 10" Hg	-0.40	631.290	637.358	535.032	541.331	16.5	16.5	88/92	76/78

Pump must be operated for at least 15 minutes at each ΔH setting (.5, 1, 1.5, 2 and 3)

T_{dgm} = average temperature of dry gas meter (inlet and outlet) + 460°F

T_{wtm} = average temperature of wet test meter + 460°F

$$P_{wtm} = P_{bar} - \frac{\Delta wtm}{13.6}$$

$$P_{dgm} = P_{bar} + \frac{\Delta H}{13.6}$$

.9984
.9940
.9977
.9967 = 1.00

Δwtm = pressure on wet test meter in inches of H_2O

Y = meter calibration factor

28.316 =conversion factor when using a wet test meter calibrated in liters

Calculations

$$Y = \frac{(\text{wet final - wet initial})(T_{dgm})(P_{wtm})}{(\text{dry final - dry initial})(28.316)(T_{wtm})(P_{dgm})} \text{ or } (1)$$

$$\bar{Y} = \frac{\Sigma Y}{5}$$

Meter Tolerance = 1.00 ± 0.01

If the meter calibration factor is not within the allowable tolerance, the calibration factory Y may be used to mathematically correct the gas meter dial readings to the proper values instead of physically adjusting the dry gas meter dials to correspond to the wet test meter readings.

ORIFICE CALIBRATION FORM

Date 12/30/80 Meter Box No. 900

P_{bar} 30.18 Calibrated By Jim Denton

ΔH	V_1	V_2	θ	t_1	t_2	$V_2 - V_1$	Q_m	K_m
in. H_2O	CF	CF	Sec.	°F	°F	CF		
.5	546.210	552.238	900	82	72	6.028	.4013	.7284
1.0	552.729	561.276	900	94	79	8.547	.5670	.7234
1.5	561.872	572.224	900	102	84	10.352	.6805	.7061
2.0	572.522	584.653	900	103	88	12.131	.8047	.7208
2.5	585.277	599.072	900	105	91	13.795	.9042	.7229
							Average K_m	.7203

V_1 = Dry gas meter reading at the start of each test

V_2 = Dry gas meter reading at the end of each test

ΔH_a = 1.78

t_1 = Dry gas meter inlet temperature

t_2 = Dry gas meter outlet temperature

Calculations

1. Q_m = (for each ΔH) $\frac{V_2 - V_1}{\Theta} \left[\frac{t_2 + 460}{\frac{t_1 + t_2}{2} + 460} \right] (60)(Y)$

1.008
1.009
1.002
1.009
.996
1.004 = 1.00

2. K_m = (for each ΔH) $Q_m \sqrt{\frac{P_m M_m}{T_m \Delta H}}$

$M_m = 29$
$T_m = t_2 + 460$
$P_m = P_{bar} + \frac{\Delta H}{13.6}$

Y = meter calibration factor

3. Calculate the average K_m as follows:

$$\bar{K}_m = \frac{\Sigma K_m}{5}$$

4. Calculate ΔH_a as follows:

$$\Delta H_a = \frac{Q@^2 \; P@ \; M@}{T@} \left[\frac{1}{\bar{K}_m^2} \right] = \frac{0.921}{\bar{K}_m^2}$$

Q@ = 0.75 cfm
T@ = 528°R
P@ = 29.92 in.Hg
M@ = 29

5. Orifice Tolerance = 1.84 ± .25

ORIFICE CALIBRATION FORM

Date 3/18/81 Meter Box No. 400

P_{bar} 29.90 Calibrated By LOTZ

ΔH	V_1	V_2	θ	t_1	t_2	$V_2 - V_1$	Q_m	K_m
in. H_2O	CF	CF	Sec.	°F	°F	CF		
0.5			900	78	69	6.201	.4092	.7414
0.5			900	87	75	6.234	.4085	.7360
0.5			900	90	77	6.299	.4140	.7444
							Average K_m	.7406

V_1 = Dry gas meter reading at the start of each test

V_2 = Dry gas meter reading at the end of each test

t_1 = Dry gas meter inlet temperature

t_2 = Dry gas meter outlet temperature

1.68

Calculations

1. Q_m = (for each ΔH)

$$\frac{V_2 - V_1}{\Theta}\left[\frac{t_2 + 460}{\frac{t_1 + t_2}{2} + 460}\right](60)(Y)$$

2. K_m = (for each ΔH)

$$Q_m\sqrt{\frac{P_m M_m}{T_m \Delta H}}$$

$M_m = 29$
$T_m = t_2 + 460$
$P_m = P_{bar} + \frac{\Delta H}{13.6}$

Y = meter calibration factor

3. Calculate the average K_m as follows:

$$\bar{K}_m = \frac{\Sigma K_m}{5}$$

4. Calculate ΔH_a as follows:

$$\Delta H_a = \frac{Q@^2\ P@\ M@}{T@}\left[\frac{1}{\bar{K}_m^2}\right] = \frac{0.921}{\bar{K}_m^2}$$

Q@ = 0.75 cfm
T@ = 528°R
P@ = 29.92 in.Hg
M@ = 29

5. Orifice Tolerance = 1.84 ± .25

GUARDIAN SYSTEMS inc

GUARDIAN SYSTEMS inc

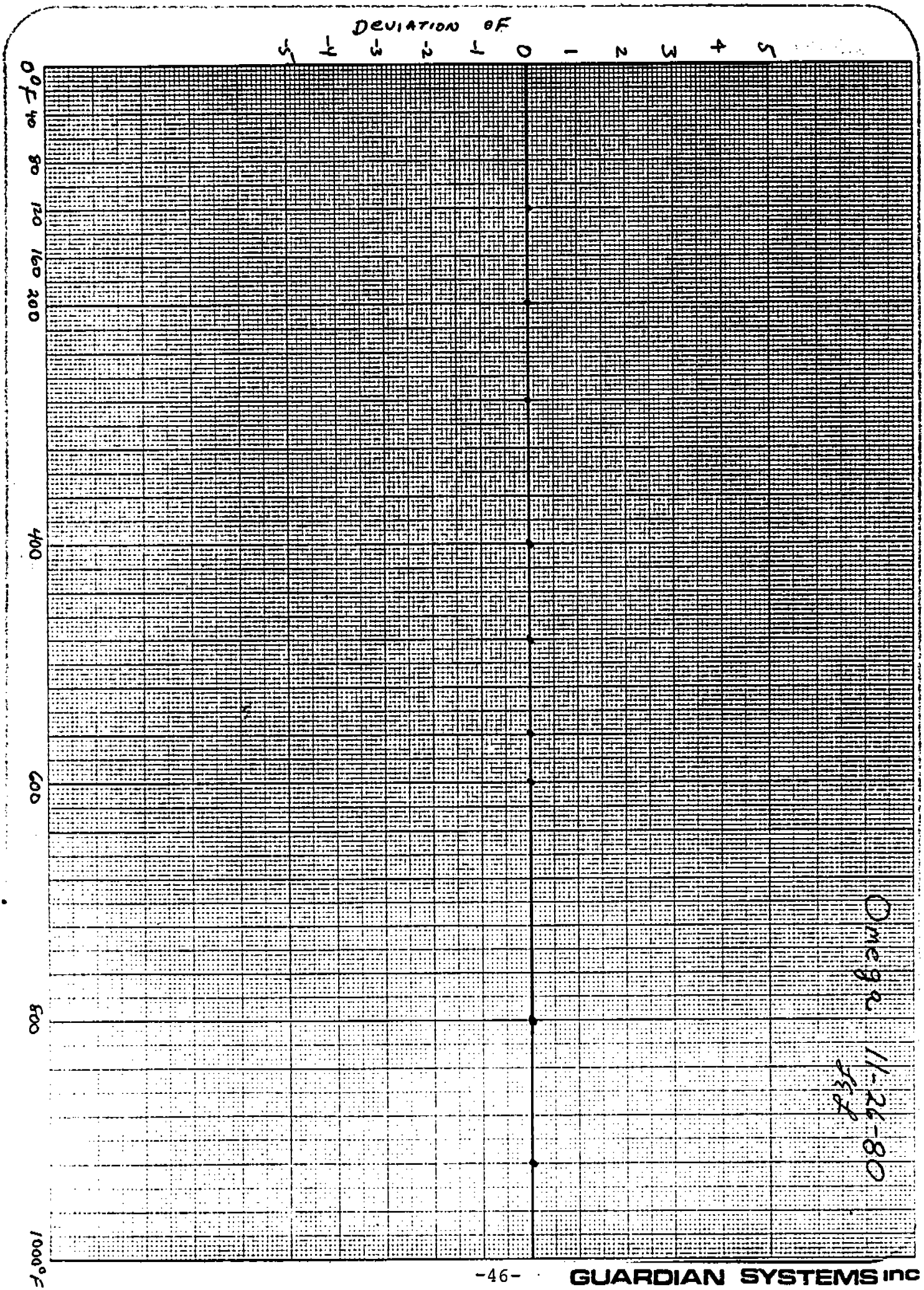

GUARDIAN SYSTEMS inc

GUARDIAN SYSTEMS inc

PITOT CALIBRATION FORM

Date 12/11/80 Probe # 10-2

Calibrated By J.D. + R.S.

Nozzle Size —

SIDE A

Run #	ΔP_{std} (in. H_2O) Standard	$\Delta P(s)$ (in. H_2O) Type "s"	$C_p(s)$	Deviation $C_p(s) - \overline{C}_p(A)$
1	.71	.98	.843	.001
2	.70	.97	.841	.001
3	.70	.97	.841	.001
		$\overline{C}_p(A)$	.842	

SIDE B

Run #	ΔP_{std} (in. H_2O) Standard	$\Delta P(s)$ (in. H_2O) Type "s"	$C_p(s)$	Deviation $C_p(s) - \overline{C}_p(B)$
1	.71	.98	.843	.001
2	.72	.99	.844	.002
3	.72	1.0	.840	.002
		$\overline{C}_p(B)$	.842	

CALCULATIONS

$$C_p(s) = C_{p(std)} \text{ (or 0.99)} \sqrt{\frac{\Delta P_{std}}{\Delta P(s)}}$$

$$\text{Average Deviation} = \frac{\Sigma \left| C_p(s) - \overline{C}_p(A \text{ or } B) \right|}{3} \longleftarrow \text{Must be} \leq 0.01$$

$$\left| \overline{C}_p(A) - \overline{C}_p(B) \right| \longleftarrow \text{Must be} \leq 0.01 \qquad .00$$

FIELD DATA SHEET

PLANT ABC RUN # 1

LOCATION Coke Oven DATE 3/4/81

BARO. PRES. 29.86 TIME 8:30

GUARDIAN SYSTEMS INCORPORATE

2610 - 19TH STREET SOUTH
BIRMINGHAM, ALABAMA 35209
TELEPHONE 205/879-1850

POINT NO.	TIME MIN	TIME DUR	METER VOL FT. 3	STACK TEMP °F	METER TEMP. °F IN	OUT	AVG	IMP TEMP °F	BOX TEMP °F	METER PRESSURE "H_2O	VELOCITY PRESSURE "H_2O	Vacuum Pressure "Hg
tA	0	2	748.845									
1	2	1	750.0	387	68	64	66	45	250	1.0	.1	2
2	4		751.1	385	70	66	68	45	250	1.0	.1	2
3	6		752.1	408	72	66	69	45	250	.8	.08	2
4	8		752.9	410	72	66	69	45	255	.50	.05	2
5	10		753.8	412	72	66	69	48	255	.50	.05	2
6	12		754.8	411	74	66	70	48	255	.80	.08	2
7	14		755.6	379	74	66	70	48	250	.50	.05	2
8	16		756.4	340	74	66	70	48	250	.40	.04	2
9	18		757.1	360	74	66	70	48	250	.40	.04	2
10	20		757.9	375	76	68	72	48	255	.50	.05	2
11	22		758.7	387	76	66	71	48	250	.50	.05	2
tB												
1	24		759.4	401	70	66	69	50	230	1.0	.1	2
	26		761.0	421	76	70	73	50	235	1.0	.1	2
3	28		762.2	388	78	72	75	50	240	1.2	.12	2
4	30		763.4	390	80	72	76	50	245	1.0	.10	2
5	32		764.6	393	80	74	77	50	245	1.0	.10	2
6	34		765.6	397	80	74	77	50	250	.80	.08	2
7	36		766.6	397	80	74	77	50	250	.80	.08	2
8	38		767.6	387	80	74	77	52	255	.70	.07	2
9	40		768.4	380	80	74	77	52	250	.50	.05	2
10	42		769.2	295	80	74	77	52	250	.50	.05	2
11	44		770.2	315	80	74	77		245	.60	.06	2

STATIC PRESSURE "H_2 -.84

PROBE TIP SIZE
BEFORE .375 .375 .375 AFTER

WATER
ml.
gram
Total

~~FILTER NO.~~ Operator Scarborough

SAMPLE BOX NO. 6
METER BOX NO. 400
METER ΔH@ 1.78
PITOT, CP .85
TEMP. DEVICE Omega
PROBE LGTH. 10'
PROBE LINER SS
PROBE HTR SET. 70
AMBIENT TEMP. 57

NOTES
Orifice 7"
Pitot 7"
Back V 10" Hg
F 748.845
I 748.830
.015
CO_2
O_2

FIELD DATA SHEET

PLANT ABe

LOCATION Coke oven

BARO. PRES.

RUN # Moisture Pretest.

DATE

TIME

GUARDIAN SYSTEM INCORPORATED
2610 - 19TH STREET SOUTH
BIRMINGHAM, ALABAMA 35209
TELEPHONE 205/879-1850

POINT NO.	TIME MIN	TIME DUR	METER VOL FT.3	STACK TEMP °F	METER TEMP. °F IN	METER TEMP. °F OUT	METER TEMP. °F AVG	IMP TEMP °F	BOX TEMP °F	METER PRESSURE "H_2O	VELOCITY PRESSURE "H_2O	Vacuum Pressure "Hg
Pta			728.350	252	82	65	75					
	1									1.33	.11	
	2									1.45	.12	
	3									1.69	.14	
	4										.14	
	5			246						1.81	.15	
	6										.12	
	7										.10	
	8										.11	
	9										.09	
	10										.10	
	11			250							.15	
			728.350		~~90~~	60	85					
								97				
										1.896		

STATIC PRESSURE "H_2O -.85

PROBE TIP SIZE .180
BEFORE AFTER

WATER

ml.

gram

Total 40.5
9%

FILTER NO.

SAMPLE BOX NO.
METER BOX NO.
METER ΔH@
PITOT, CP
TEMP. DEVICE
PROBE LGTH.
PROBE LINER
PROBE HTR SET.
AMBIENT TEMP.

NOTES

- 5° cyclonic

CO_2 3%
O_2 15%