Note: This is a reference cited in *AP 42, Compilation of Air Pollutant Emission Factors, Volume I Stationary Point and Area Sources.* AP42 is located on the EPA web site at www.epa.gov/ttn/chief/ap42/

The file name refers to the reference number, the AP42 chapter and section. The file name "ref02_c01s02.pdf" would mean the reference is from AP42 chapter 1 section 2. The reference may be from a previous version of the section and no longer cited. The primary source should always be checked.

a

PARTICULATE EMISSION TESTS

ON

STACK #4

AT

ALABAMA BY PRODUCTS COMPANY

MARCH 9, 1981

CONDUCTED IN

TARRANT CITY, ALABAMA

TABLE OF CONTENTS

Chapter		Page
I.	Introduction	1
II.	Sampling and Analytical Procedures	2
III.	Test Results	
	Summary of Test Results	7
	Nomenclature	20
	Equations	23
	Complete Results	11
IV.	Field Data	25
V.	Calibrations	37
	Filter Information	38
	Probe Heater Calibrations	39
	Meter Calibrations	40
	Orifice Calibrations	42
	Box Thermometer Calibrations	44
	Impinger Thermometer Calibrations	45
	Stack Temperature Calibration	46
	Meter Temperature Calibration	47
	Pitot Calibration	48

Tables

1	Summary of Test Results, Front Half	8
2	Summary of Test Results, Back Half	9
3	Summary of Test Results, Combined	10

Figures

1	Sample Point Location	5
2	Particulate Sampling Train	6

Introduction

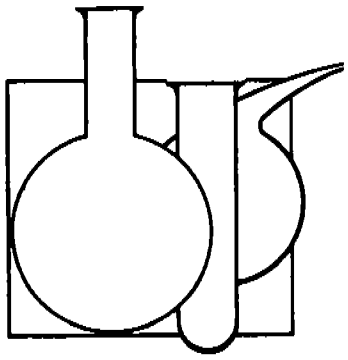

I. INTRODUCTION

On March 9, 1981, Guardian Systems, Inc., performed a series of three particulate emission determinations on the #4 Stack which controls emissions from the 5th and 6th coke batteries of Alabama By Products in Tarrant City, Alabama. E.P.A. Methods 1-5 were used to make the determinations on both the front and back half catches. Mr. Bill Warren of Alabama By Products supervised the plant operation during the tests. Mr. Rick Scarborough, Mr. Jim Denton and Mr. Michael Cusick of Guardian Systems, Inc., performed the tests.

Sampling & Analytical Procedures

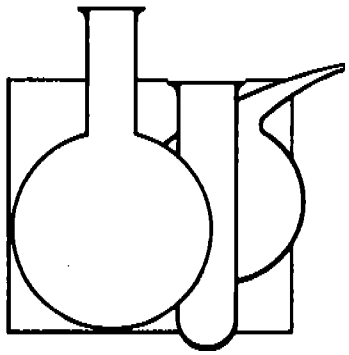

II. SAMPLING AND ANALYTICAL PROCEDURES

General

Stack temperature, pressure, range of velocity heads, and moisture content were determined to correctly set the nomograph and proper nozzle size for isokinetic sampling. The meter box was leak checked from the pump through the orifice as outlined in Method 5. The equipment used in this test was manufactured by Research Appliance Corporation and was properly calibrated before and after the tests (See Calibrations).

The stack was sampled at 48 points (12 points on 4 diameters). Tne Sample Point Location and Stack Breeching Diagrams can be found in Figure 1.

Sampling Techniques

The particulate determinations were made by utilizing the sampling train in Figure 2. Initial and final leak checks of the sampling systems and pitot lines were performed as outlined in Method 5 and these were recorded on the data sheets. The nozzles were calibrated before and after each test using a micrometer and were also recorded on the data sheets.

Tne particualte samples were taken by sampling each point for two minutes. The gases were drawn through a heated 10 foot stainless steel lined probe. The probe heater was maintained at the proper setting to obtain an exit temperature of 248 $\pm$ 25 ^{o}F. (See Calibrations) The gases then passed through a glass cyclone for removing particulate matter approximately 10 microns and greater in size, then through a glass fiber filter (Gelman, Class A) of 0.3 microns retention to remove any remaining particulate

matter. The cyclone and filter were maintained at a temperature of 248 $\pm$ 25 ^{o}F. The sample box temperatures were recorded at each point on the data sheets.

The gases then passed through four (4) Greensburg-Smith impingers. The first and second impingers contained 150 milliliters of distilled water each, while the third was empty and the fourth contained approximately 220 grams of indicating silica gel. These impingers were placed in an ice bath during the test to maintain a maximum exit temperature from the last impinger of 68 ^{o}F. This temperature is also recorded on the data sheets. The clean and cool gases then entered the meter box where the gas flow and temperature were measured (See data sheets).

Gas analysis for O_2 and CO_2 were taken during each test using Fyrite gas analyzers. Particulate catches were placed in sealed petri dishes. The acetone washes of the nozzle, probe and cyclone were combined and placed in sealed containers. For the series of tests an acetone blank of approximately 400 milliliters was placed in a sealed container. These containers were transported to the laboratory for analysis. In our laboratory, the back-half train, (everything between and including the back-half of the filter holder to the third impinger) was prepared for analysis by first measuring the volume of liquid in the first three impingers and then transferring the liquid to a sample container. All parts of the back-half were rinsed with distilled water and the rinsings were added to the same sample container.

Analysis - Front-Half

The filters (Gelman, Class A, without organic binder, minimum

99.9% retention for particles of 0.3 microns as determined by DOP tests) were prepared for the field test by desiccating at 68 $\pm$ 10 ^{o}F and ambient pressure for 24 hours and weighing at intervals of at least six (6) hours to a constant weight (less than 0.5 milligrams change from previous reading). Upon return to the laboratory, the filters were again subjected to the same procedures as outlined above. The weights are recorded in a bound laboratory book and were transferred to the laboratory sheets in this report. During each weighing the filter was not exposed to laboratory atmosphere for more than two (2) minutes and the relative humidity of the laboratory was less than fifty percent (50%)

The acetone washings, along with the acetone blank for the group of tests, were evaporated to dryness in tared glass beakers. They were then desiccated for twenty four (24) hours to a constant weight.

The moisture content was determined for each run by measuring the increase in the amount of water collected in the impingers and the increase in weight of the silica gel. These weights were combined to give the total amount of water collected.

Analysis - Back-Half

The water and water rinsings were evaporated and the residue weighed. These results are reported under the test results section.

STACK BREECHING DIAGRAM
AND SAMPLE POINT LOCATION
FOR
STACK #4

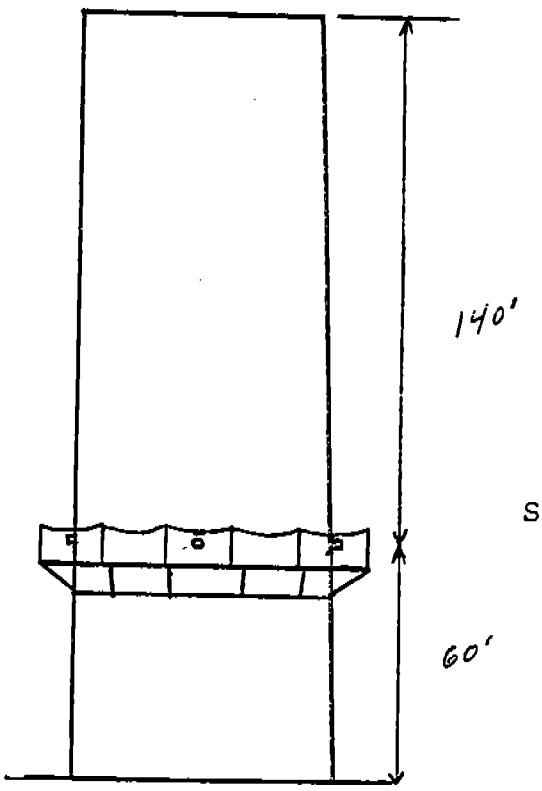

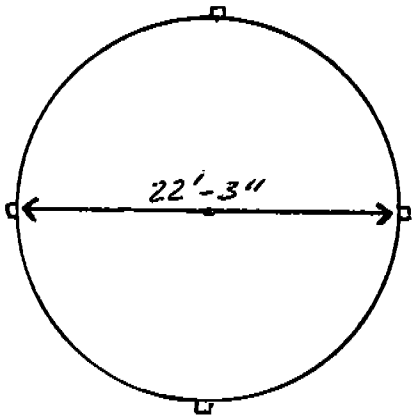

Sample Point	Inches from Wall
1.	2.8
2.	8.6
3.	14.7
4.	21.1
5.	28.0
6.	35.2
7.	43.1
8.	51.7
9.	61.4
10.	72.6
11.	86.3
12.	106.2

Figure 1

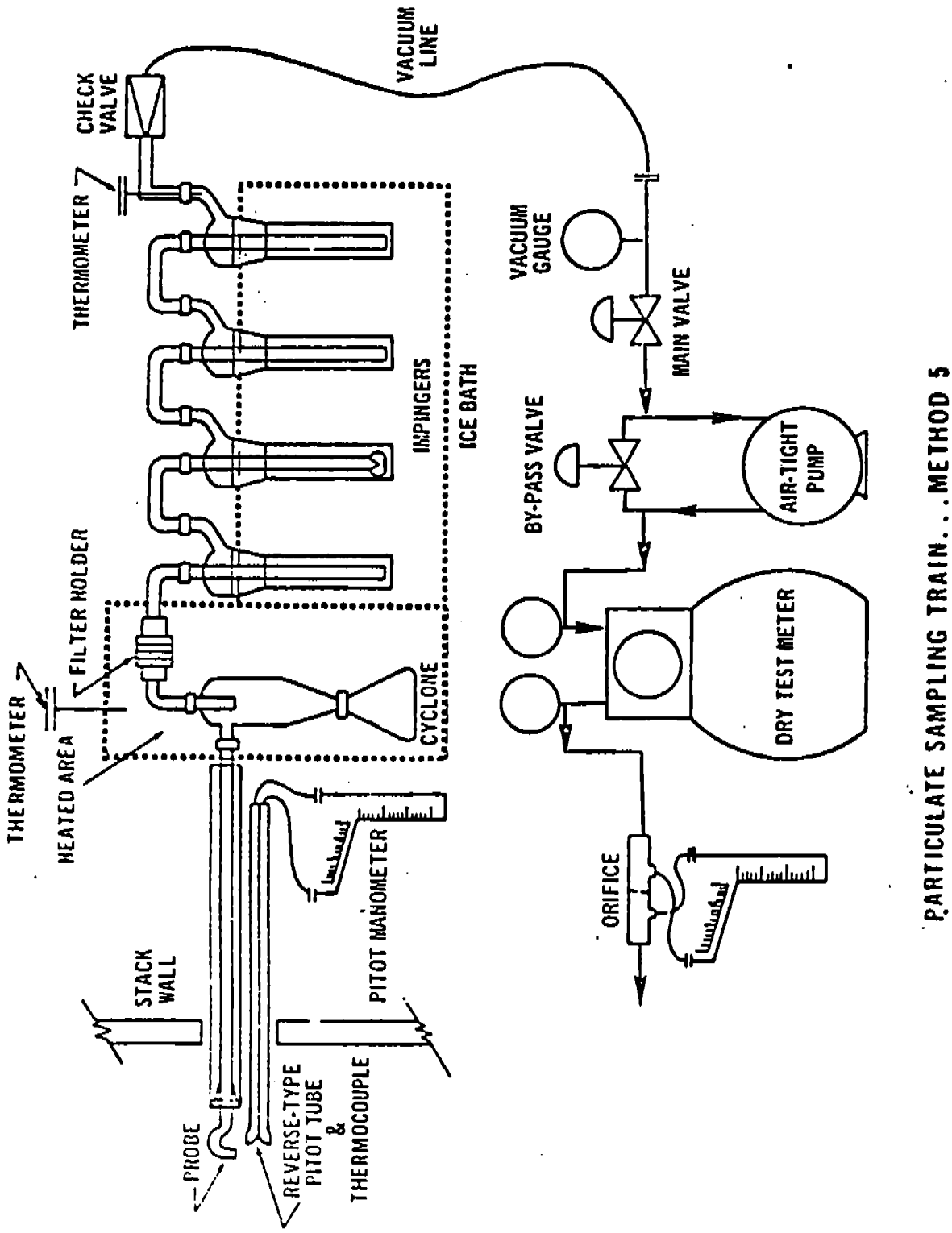
VACUUM LINE
CHECK VALVE
THERMOMETER
VACUUM GAUGE
MAIN VALVE
IMPINGERS
ICE BATH
BY-PASS VALVE
AIR-TIGHT PUMP
FILTER HOLDER
THERMOMETER
HEATED AREA
CYCLONE
DRY TEST METER
PITOT MANOMETER
ORIFICE
STACK WALL
PROBE
REVERSE-TYPE PITOT TUBE & THERMOCOUPLE
PARTICULATE SAMPLING TRAIN...METHOD 5

Figure 2

Test Results

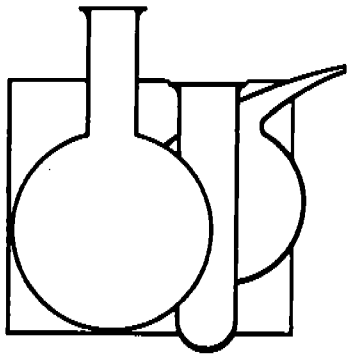

III. SUMMARY OF TEST RESULTS

The emission rate in pounds per hour are listed below. Summary results are found in tables 1-3 while the complete results are found immediately after.

Test #	1	2	3	Average
Front-Half	11.96	40.61	23.47	25.35
Back-Half	6.34	32.75	11.85	16.98
Combined	18.30	73.36	35.32	42.33

TABLE 1

SUMMARY OF FRONT HALF TEST RESULTS

Test Number	1	2	3
Date	3/9/81	3/9/81	3/9/81
Time	900-1110	1225-1445	1525-1745
Moisture, %	5.36	8.62	8.58
Gas Temperature, °F	398	398	398
Stack Velocity, f/s	9.37	8.80	7.19
Volumetric Flow, ACFM	218,507	205,291	167,841
Volumetric Flow, DSCFM	128,500	116,628	95,375
Concentration, Grains/ACF	0.006	0.023	0.016
Concentration, Grains/DSCF	0.011	0.041	0.029
Particulate Mass Rate, lbs/hr	11.96	40.61	23.47
% Isokinetic	98.25	98.24	107.56

TABLE 2

SUMMARY OF BACK HALF TEST RESULTS

Test Number	1	2	3
Date	3-9-81	3-9-81	3-9-81
Time	900-1110	1225-1445	1525-1745
Moisture, %	5.36	8.62	8.58
Gas Temperature, ^{o}F	398	398	398
Stack Velocity, f/s	9.37	8.80	7.19
Volumetric Flow, ACFM	218,507	205,291	167,841
Volumetric Flow, DSCFM	128,502	116,628	95,375
Concentration, Grains/ACF	0.003	0.019	0.008
Concentration, Grains/DSCF	0.006	0.033	0.014
Particulate Mass Rate, lbs/hr	6.34	32.75	11.85
% Isokinetic	98.25	98.24	107.50

TABLE 3

SUMMARY OF COMBINED TEST RESULTS

Test Number	1	2	3
Date	3-9-81	3-9-81	3-9-81
Time	900-1110	1225-1445	1525-1745
Moisture, %	5.36	8.62	8.58
Gas Temperature, °F	398	398	398
Stack Velocity, f/s	9.37	8.80	7.19
Volumetric Flow, ACFM	218,507	205,291	167,841
Volumetric Flow, DSCFM	128,502	116,628	95,375
Concentration, Grains/ACF	0.010	0.042	0.024
Concentration, Grains/DSCF	0.017	0.073	0.043
Particulate Mass Rate, lbs/hr	18.30	73.36	35.32
% Isokinetic	98.25	98.24	107.56

Area = 102.[illegible] ft²

---

157 ft² @
@ 60' height
12/28/81
CBK
10 Royal Edward

1. FRONT HALF — Run Number

3-9-81 — Date

30.32	Barometric Pressure (in. Hg.)
-1.30	Static Pressure (in. H_2O)
96.00	Time (minutes)
39.878	Meter Volume (corrected)
398.00	Stack Temperature (^oF)
72.00	Meter Temperature (^oF)
.53	Meter Pressure (in. H_2O)
.131	Sq. Root Velocity Pressure
28.30	Mg of Particulate
48.30	Ml of water condensed
15.00	% O_2
4.00	% CO_2
388.822088	Stack Area (Ft^2)
.84	Pitot Correction Factor
.001288	Nozzle Area (Ft^2)

1. Stack Pressure

30.22	Inches Hg
767.59	Millimeters Hg

2. Meter Pressure

30.36	Inches Hg
771.15	Millimeters Hg

3. Meter Volume

40.143	Dry Standard Cubic Feet
1.137	Dry Standard Cubic Meters

4. Water Volume

2.273	Standard Cubic Feet
.064	Standard Cubic Meters

5. Moisture Content

.0536	(Convert to % X 100)

6. Molecular Weight Dry

29.24

7. Molecular Weight Wet

28.64

8. Stack Velocity

9.37	Feet per Second
2.86	Meters per Second

9. Volumetric Flow

218,507.	Actual Cubic Feet per Minute
103.1244	Actual Cubic Meters per Second

10. Volumetric Flow

128,502.	Dry Standard Cubic Feet per Minute
60.6465	Dry Standard Cubic Meters per Second

11. Concentration

.0109	Grains per Dry Standard Cubic Foot
.0249	Grams per Dry Standard Cubic Meter

15. Particulate Mass Rate

11.96 — Pounds per Hour

16. Volume at Nozzle

68.260	Actual Cubic Feet
1.933	Actual Cubic Meters

17. Concentration

.0064	Grains per Actual Cubic Foot
.0146	Grams per Actual Cubic Meter

18. % Isokinetic

98.25

.....

1. BACK HALF — Run Number

3-9-81 — Date

30.32 Barometric Pressure (in. Hg.)

-1.30 Static Pressure (in. H_2O)

96.00 Time (minutes)

39.878 Meter Volume (corrected)

398.00 Stack Temperature (^oF)

72.00 Meter Temperature (^oF)

.53 Meter Pressure (in. H_2O)

.131 Sq. Root Velocity Pressure

15.00 Mg of Particulate

48.30 Ml of water condensed

15.00 % O_2

4.00 % CO_2

388.822088 Stack Area (Ft^2)

.84 Pitot Correction Factor

.....001283 Nozzle Area (Ft^2)

1. Stack Pressure

30.22 Inches Hg

767.59 Millimeters Hg

2. Meter Pressure

30.36 Inches Hg

771.15 Millimeters Hg

3. Meter Volume

40.143 Dry Standard Cubic Feet

1.137 Dry Standard Cubic Meters

4. Water Volume

2.273 Standard Cubic Feet

.064 Standard Cubic Meters

5. Moisture Content

.0536 (Convert to % X 100)

6. Molecular Weight Dry

29.24

7. Molecular Weight Wet

28.64

8. Stack Velocity

9.37 Feet per Second

2.86 Meters per Second

9. Volumetric Flow

218,507. Actual Cubic Feet per Minute

103.1244 Actual Cubic Meters per Second

10. Volumetric Flow

128,502. Dry Standard Cubic Feet per Minute

60.6465 Dry Standard Cubic Meters per Second

11. Concentration

.0058 Grains per Dry Standard Cubic Foot

.0133 Grams per Dry Standard Cubic Meter

15. Particulate Mass Rate

6.34 Pounds per Hour

16. Volume at Nozzle

68.260 Actual Cubic Feet

1.933 Actual Cubic Meters

17. Concentration

.0034 Grains per Actual Cubic Foot

.0078 Grams per Actual Cubic Meter

18. % Isokinetic

98.25

.....

.....

1. COMBINED Run Number

3-9-81 Date

30.32 Barometric Pressure (in. Hg.)

-1.30 Static Pressure (in. H_2O)

96.00 Time (minutes)

39.878 Meter Volume (corrected)

398.00 Stack Temperature (^oF)

72.00 Meter Temperature (^oF)

.53 Meter Pressure (in. H_2O)

.131 Sq. Root Velocity Pressure

43.30 Mg of Particulate

48.30 Ml of water condensed

15.00 % O_2

4.00 % CO_2

388.822088 Stack Area (Ft^2)

.84 Pitot Correction Factor

.001288 Nozzle Area (Ft^2)

.....

1. Stack Pressure

30.22 Inches Hg

767.59 Millimeters Hg

2. Meter Pressure

30.36 Inches Hg

771.15 Millimeters Hg

3. Meter Volume

40.143 Dry Standard Cubic Feet

1.137 Dry Standard Cubic Meters

4. Water Volume

2.273 Standard Cubic Feet

.064 Standard Cubic Meters

5. Moisture Content

.0536 (Convert to % X 100)

6. Molecular Weight Dry

29.24

7. Molecular Weight Wet

28.64

8. Stack Velocity

9.37 Feet per Second

2.86 Meters per Second

9. Volumetric Flow

218,507. Actual Cubic Feet per Minute

103.1244 Actual Cubic Meters per Second

10. Volumetric Flow

128,502. Dry Standard Cubic Feet per Minute

60.6465 Dry Standard Cubic Meters per Second

11. Concentration

.0166 Grains per Dry Standard Cubic Foot

.0380 Grams per Dry Standard Cubic Meter

15. Particulate Mass Rate

18.30 Pounds per Hour

16. Volume at Nozzle

68.260 Actual Cubic Feet

1.933 Actual Cubic Meters

17. Concentration

.0098 Grains per Actual Cubic Foot

.0224 Grams per Actual Cubic Meter

18. % Isokinetic

98.25

.....

• • • • • • • • • • • • • • •

2. FRONT HALF — Run Number

3-9-81 — Date

30.32 Barometric Pressure (in. Hg.)

-1.10 Static Pressure (in. H_2O)

96.00 Time (minutes)

36.606 Meter Volume (corrected)

398.00 Stack Temperature (^oF)

78.00 Meter Temperature (^oF)

.42 Meter Pressure (in. H_2O)

.122 Sq. Root Velocity Pressure

96.10 Mg of Particulate

73.00 Ml of water condensed

15.00 % O_2

3.00 % CO_2

388.822088 Stack Area (Ft^2)

.84 Pitot Correction Factor

.001288 Nozzle Area (Ft^2)

1. Stack Pressure

30.24 Inches Hg

768.10 Millimeters Hg

2. Meter Pressure

30.35 Inches Hg

770.89 Millimeters Hg

3. Meter Volume

36.428 Dry Standard Cubic Feet

1.032 Dry Standard Cubic Meters

4. Water Volume

3.436 Standard Cubic Feet

.097 Standard Cubic Meters

5. Moisture Content

.0862 (Convert to % X 100)

6. Molecular Weight Dry

29.08

7. Molecular Weight Wet

28.12

8. Stack Velocity

8.80 Feet per Second

2.68 Meters per Second

9. Volumetric Flow

205,291. Actual Cubic Feet per Minute

96.8871 Actual Cubic Meters per Second

10. Volumetric Flow

116,628. Dry Standard Cubic Feet per Minute

55.0426 Dry Standard Cubic Meters per Second

11. Concentration

.0406 Grains per Dry Standard Cubic Foot

.0929 Grams per Dry Standard Cubic Meter

15. Particulate Mass Rate

40.61 Pounds per Hour

16. Volume at Nozzle

64.123 Actual Cubic Feet

1.816 Actual Cubic Meters

17. Concentration

.0231 Grains per Actual Cubic Foot

.0529 Grams per Actual Cubic Meter

18. % Isokinetic

98.24

• • • • • • • • • • • • • • •

2. BACK HALF — Run Number

3-9-81 — Date

30.32	Barometric Pressure (in. Hg.)
-1.10	Static Pressure (in. H_2O)
96.00	Time (minutes)
36.606	Meter Volume (corrected)
398.00	Stack Temperature (^oF)
78.00	Meter Temperature (^oF)
.42	Meter Pressure (in. H_2O)
.122	Sq. Root Velocity Pressure
77.50	Mg of Particulate
73.00	Ml of water condensed
15.00	% O_2
3.00	% CO_2
388.822088	Stack Area (Ft^2)
.84	Pitot Correction Factor
.001288	Nozzle Area (Ft^2)

1. Stack Pressure

30.24	Inches Hg
768.10	Millimeters Hg

2. Meter Pressure

30.35	Inches Hg
770.89	Millimeters Hg

3. Meter Volume

36.428	Dry Standard Cubic Feet
1.032	Dry Standard Cubic Meters

4. Water Volume

3.436	Standard Cubic Feet
.097	Standard Cubic Meters

5. Moisture Content

.0862	(Convert to % X 100)

6. Molecular Weight Dry

29.08

7. Molecular Weight Wet

28.12

8. Stack Velocity

8.80	Feet per Second
2.68	Meters per Second

9. Volumetric Flow

205,291.	Actual Cubic Feet per Minute
96.8871	Actual Cubic Meters per Second

10. Volumetric Flow

116,628.	Dry Standard Cubic Feet per Minute
55.0426	Dry Standard Cubic Meters per Second

11. Concentration

.0328	Grains per Dry Standard Cubic Foot
.0750	Grams per Dry Standard Cubic Meter

15. Particulate Mass Rate

32.75 Pounds per Hour

16. Volume at Nozzle

64.123	Actual Cubic Feet
1.816	Actual Cubic Meters

17. Concentration

.0186	Grains per Actual Cubic Foot
.0426	Grams per Actual Cubic Meter

18. % Isokinetic

98.24

• • • • • • • • • • • • • • •

2. COMBINED Run Number

3-9-81 Date

30.32 Barometric Pressure (in. Hg.)

-1.10 Static Pressure (in. H_2O)

96.00 Time (minutes)

36.606 Meter Volume (corrected)

398.00 Stack Temperature (°F)

78.00 Meter Temperature (°F)

.42 Meter Pressure (in. H_2O)

.122 Sq. Root Velocity Pressure

173.60 Mg of Particulate

73.00 Ml of water condensed

15.00 % O_2

3.00 % CO_2

388.822088 Stack Area (Ft^2)

.84 Pitot Correction Factor

.001288 Nozzle Area (Ft^2)

1. Stack Pressure

30.24 Inches Hg

768.10 Millimeters Hg

2. Meter Pressure

30.35 Inches Hg

770.89 Millimeters Hg

3. Meter Volume

36.428 Dry Standard Cubic Feet

1.032 Dry Standard Cubic Meters

4. Water Volume

3.436 Standard Cubic Feet

.097 Standard Cubic Meters

5. Moisture Content

.0862 (Convert to % X 100)

6. Molecular Weight Dry

29.08

7. Molecular Weight Wet

28.12

8. Stack Velocity

8.80 Feet per Second

2.68 Meters per Second

9. Volumetric Flow

205,291. Actual Cubic Feet per Minute

96.8871 Actual Cubic Meters per Second

10. Volumetric Flow

116,628. Dry Standard Cubic Feet per Minute

55.0426 Dry Standard Cubic Meters per Second

11. Concentration

.0734 Grains per Dry Standard Cubic Foot

.1679 Grams per Dry Standard Cubic Meter

15. Particulate Mass Rate

73.36 Pounds per Hour

16. Volume at Nozzle

64.123 Actual Cubic Feet

1.816 Actual Cubic Meters

17. Concentration

.0417 Grains per Actual Cubic Foot

.0954 Grams per Actual Cubic Meter

18. % Isokinetic

98.24

• • • • • • • • • • • • • • •

3. FRONT HALF — Run Number

3-9-81 — Date

30.32	Barometric Pressure (in. Hg.)
-1.20	Static Pressure (in. H_2O)
96.00	Time (minutes)
32.907	Meter Volume (corrected)
398.00	Stack Temperature (^oF)
80.00	Meter Temperature (^oF)
.29	Meter Pressure (in. H_2O)
.10	Sq. Root Velocity Pressure
60.80	Mg of Particulate
65.00	Ml of water condensed
15.00	% O_2
4.00	% CO_2
388.822088	Stack Area (Ft^2)
.84	Pitot Correction Factor
.001288	Nozzle Area (Ft^2)

1. Stack Pressure

30.23	Inches Hg
767.84	Millimeters Hg

2. Meter Pressure

30.34	Inches Hg
770.64	Millimeters Hg

3. Meter Volume

32.616	Dry Standard Cubic Feet
.924	Dry Standard Cubic Meters

4. Water Volume

3.060	Standard Cubic Feet
.087	Standard Cubic Meters

5. Moisture Content

.0858	(Convert to % X 100)

6. Molecular Weight Dry

29.24

7. Molecular Weight Wet

28.28

8. Stack Velocity

7.19	Feet per Second
2.19	Meters per Second

9. Volumetric Flow

167,841.	Actual Cubic Feet per Minute
79.2126	Actual Cubic Meters per Second

10. Volumetric Flow

95,375.	Dry Standard Cubic Feet per Minute
45.0122	Dry Standard Cubic Meters per Second

11. Concentration

~~.0287~~	Grains per Dry Standard Cubic Foot
.0657	Grams per Dry Standard Cubic Meter

15. Particulate Mass Rate

23.47	Pounds per Hour

16. Volume at Nozzle

57.399	Actual Cubic Feet
1.625	Actual Cubic Meters

17. Concentration

.0163	Grains per Actual Cubic Foot
.0373	Grams per Actual Cubic Meter

18. % Isokinetic

107.56

3. BACK HALF — Run Number

3-9-81 — Date

30.32	Barometric Pressure (in. Hg.)
-1.20	Static Pressure (in. H_2O)
96.00	Time (minutes)
32.907	Meter Volume (corrected)
398.00	Stack Temperature (^oF)
80.00	Meter Temperature (^oF)
.29	Meter Pressure (in. H_2O)
.10	Sq. Root Velocity Pressure
30.70	Mg of Particulate
65.00	Ml of water condensed
15.00	% O_2
4.00	% CO_2
388.822088	Stack Area (Ft^2)
.84	Pitot Correction Factor
.001288	Nozzle Area (Ft^2)

1. Stack Pressure

30.23	Inches Hg
767.84	Millimeters Hg

2. Meter Pressure

30.34	Inches Hg
770.64	Millimeters Hg

3. Meter Volume

32.616	Dry Standard Cubic Feet
.924	Dry Standard Cubic Meters

4. Water Volume

3.060	Standard Cubic Feet
.087	Standard Cubic Meters

5. Moisture Content

.0858	(Convert to % X 100)

6. Molecular Weight Dry

29.24

7. Molecular Weight Wet

28.28

8. Stack Velocity

7.19	Feet per Second
2.19	Meters per Second

9. Volumetric Flow

167,841.	Actual Cubic Feet per Minute
79.2126	Actual Cubic Meters per Second

10. Volumetric Flow

95,375.	Dry Standard Cubic Feet per Minute
45.0122	Dry Standard Cubic Meters per Second

11. Concentration

.0145	Grains per Dry Standard Cubic Foot
.0332	Grams per Dry Standard Cubic Meter

15. Particulate Mass Rate

11.85	Pounds per Hour

16. Volume at Nozzle

57.399	Actual Cubic Feet
1.625	Actual Cubic Meters

17. Concentration

.0082	Grains per Actual Cubic Foot
.0188	Grams per Actual Cubic Meter

18. % Isokinetic

107.56

• • • • • • • • • • • • • •

3. COMBINED — Run Number

3-9-81 — Date

30.32	Barometric Pressure (in. Hg.)
-1.20	Static Pressure (in. H_2O)
96.00	Time (minutes)
32.907	Meter Volume (corrected)
398.00	Stack Temperature (^oF)
80.00	Meter Temperature (^oF)
.29	Meter Pressure (in. H_2O)
.10	Sq. Root Velocity Pressure
91.50	Mg of Particulate
65.00	Ml of water condensed
15.00	% O_2
4.00	% CO_2
389.822088	Stack Area (Ft^2)
.84	Pitot Correction Factor
.001288	Nozzle Area (Ft^2)

1. Stack Pressure

30.23	Inches Hg
767.84	Millimeters Hg

2. Meter Pressure

30.34	Inches Hg
770.64	Millimeters Hg

3. Meter Volume

32.616	Dry Standard Cubic Feet
.924	Dry Standard Cubic Meters

4. Water Volume

3.060	Standard Cubic Feet
.087	Standard Cubic Meters

5. Moisture Content

.0858 (Convert to % X 100)

6. Molecular Weight Dry

29.24

7. Molecular Weight Wet

28.28

8. Stack Velocity

7.19	Feet per Second
2.19	Meters per Second

9. Volumetric Flow

167,841.	Actual Cubic Feet per Minute
79.2126	Actual Cubic Meters per Second

10. Volumetric Flow

95,375.	Dry Standard Cubic Feet per Minute
45.0122	Dry Standard Cubic Meters per Second

11. Concentration

.0432	Grains per Dry Standard Cubic Foot
.0988	Grams per Dry Standard Cubic Meter

15. Particulate Mass Rate

35.32 Pounds per Hour

16. Volume at Nozzle

57.399	Actual Cubic Feet
1.625	Actual Cubic Meters

17. Concentration

.0245	Grains per Actual Cubic Foot
.0561	Grams per Actual Cubic Meter

18. % Isokinetic

107.56

• • • • • • • • • • • • • •

NOMENCLATURE

ACF - Actual Cubic Feet

ACFM - Actual Cubic Feet per minute

ACM - Actual Cubic Meters

ACMS - Actual Cubic Meters per second

An - Cross sectional area of nozzle, (ft^2)

As - Area of Stack, (ft^2)

Bws - Water vapor in the gas stream, proportion by volume (dimensionless)

Ca - Acetone blank residue concentration, mg/g

c_a - Particulate Concentration, ACF

CFM - Cubic feet per minute

Cp - Pitot tube coefficient, (dimensionless)

c_s - Particulate Concentration, grains/DSCF

Cso_2 - Concentration of sulfur dioxide (dry basis) corrected to standard conditions, lb/DSCF

C_{12} - Particulate concentration (c_s adjusted to 12% excess air), grains/DSCF

C_{50} - Particulate concentration (c_s adjusted to 50% excess air), grains/DSCF

DSCF - Dry Standard Cubic Feet

DSCFM - Dry Standard Cubic Feet per minute

DSCM - Dry Standard Cubic Meters

DSCMS - Dry Standard Cubic Meters per second

EA - Excess Air, %

I - Isokinetic Sampling, %

Km - Orifice Correction Factor, (dimensionless)

Kp - Pitot tube constant, 85.49 $\left[\frac{(lb/lb\text{-}mole)(in.\ Hg)}{(^{o}R)\ (in.\ H_2O)}\right]^{1/2}$

La - Maximum acceptable leakage rate for either a pretest leak check or for a leak check following a component change; equal to 0.02 CFM or 4 percent of the average sampling rate, whichever is less.

Li - Individual leakage rate observed during the leak check conducted prior to the "i^{th}" component change ($i = 1,2,3,...n$), CFM.

Lp - Leakage rate observed during the post test leak check, ft^3/min. (cfm).

Ma - Mass of residue of acetone after evaporation, mg.

Md - Molecular weight of stack gas; dry basis, lb/lb-mole.

Mn - Total amount of particulate matter collected, mg.

Ms - Molecular weight of stack gas; wet basis, lb/lb-mole.

Mw - Molecular weight of water, 18.0 g/g-mole (18.01 lb/lb-mole)

ΔP - Velocity head of stack gas, in. H_2O

Pa - Density of acetone, mg/ml

Pbar - Barometric pressure at the sampling site, in. Hg

Pg - Stack static pressure, in. H_2O

Pm - Meter pressure, in. Hg

PMR - Particulate Mass Rate, lbs per hour

Ps - Absolute stack pressure, in. Hg

Pstd - Standard absolute pressure, 29.92 in. Hg

Pw - Density of water, 0.9982 g/ml (0.002201 lb/ml)

Qa - Volumetric flow rate, ACFM

Qs - Volumetric flow rate, DSCFM

R - Ideal gas constant, 0.06236 mm Hg - $m^3/^oK$-g-mole (21.85 in. Hg-$ft^3/^oR$-lb-mole)

SCF - Standard Cubic Foot

ta - Ambient Temperature, ^oF

tm - Average Temperature of meter, ^oF

t_s - Average Temperature of stack, ^oF

tstd - Standard Temperature, $68^{o}F$

NOTE: Capital "T" denotes degrees Rankin

Va - Volume of acetone blank, ml

Vaw - Volume of acetone used in wash, ml

Vlc - Total volume of liquid collected in condenser and silica gel, ml

Vm - Volume of gas sample, as measured by the dry gas meter, ACF

Vmc - Volume of gas sample, corrected for leak, ACF

Vm(std) - Volume of gas sample measured by the dry gas meter, corrected to standard conditions, DSCF

Vn - Volume collected at stack conditions through nozzle, ACF

Vs - Average stack gas velocity, ft/sec.

Vw(std) - Volume of water in the gas sample, corrected to standard conditions, SCF

Wa - Weight of residue in acetone wash, mg

Y - Dry gas meter calibration factor, (dimensionless)

ΔH - Average pressure differential across the calibrated orifice, in. H_2O

ΔH_a - Value of ΔH measured for a specific orifice when operated under the following conditions: 0.75 cfm of dry air (M.W. = 29) at $68^{o}F$, 29.92 in. Hg.

$\sqrt{\Delta P}$ - Average of the square roots of the velocity pressure, in. H_2O

Θ - Total sampling time, min.

Θ_1 - Sampling time interval from the beginning of a run until the first component change, min.

Θ_i - Sampling time interval between two successive component changes, beginning with the interval between the first and second changes, min.

Θp - Sampling time interval from the final (n^{th}) component change until the end of the sampling run, min.

$\%CO_2$, $\%O_2$, $\%N_2$, %CO - Number percent (%) by volume (dry basis) of each compound in the stack gas.

EQUATIONS

1. $P_s = P_{bar} + \frac{P_g}{13.6}$

2. $P_m = P_{bar} + \frac{\overline{\Delta H}}{13.6}$

3. $V_{m(std)} = V_m Y \left(\frac{Tstd}{Tm}\right) \left[\frac{Pbar + \frac{\overline{\Delta H}}{13.6}}{Pstd}\right]$

4. $V_w(std) = 0.04707\ V_{lc}$

5. $B_{ws} = \frac{V_{w(std)}}{V_{m(std)} + V_{w(std)}}$

6. $M_d = 0.44\ (\%CO_2) + 0.32\ (\%O_2) + 0.28\ (\%N_2 + \%CO)$

7. $M_s = M_d\ (1 - B_{ws}) + 18(B_{ws})$

8. $v_s = K_p C_p\ (\sqrt{\Delta p})\ avg. \sqrt{\frac{T_s}{M_s P_s}}$

9. $Q_a = (v_s)\ (A_s)\ (60)$

10. $Q_s = Q_a\ (1 - B_{ws})\ \left(\frac{528}{T_s}\right)\ \left(\frac{P_s}{29.92}\right)$

11. $c_s = \left[0.0154\ (Mn/Vmstd)\right]$

12. $EA = \left[\frac{\%O_2 - 0.5\ \%CO}{0.264\ \%N_2\ (\%O_2 - 0.5\ \%CO)}\right] 100$

13. $c_{50} = \frac{c_s}{1 - \left[\frac{(1.5)(\%O_2) - 0.133(\%N_2) - 0.75\ (\%CO)}{21}\right]}$

14. $c_{12} = c_s\ \frac{12}{\%\ CO_2}$

15. $PMR = (c_s)(Q_s)\left(\frac{60}{7000}\right)$

16. $V_n = \frac{T_s}{P_s}\left[(0.002669)(V_{1c}) + \frac{V_m}{T_m}\left(P_{bar} + \frac{\overline{\Delta H}}{13.6}\right)\right]$

17. $C_a = (0.0154)(M_n)/V_n$

18. $I = \frac{100\ V_n}{60\ \Theta\ v_s\ An}$

19. $V_{mc} = V_m - (L_p - L_a)\ \Theta$

20. $W_a = Ca\ Vaw\ p_a$

Field Data

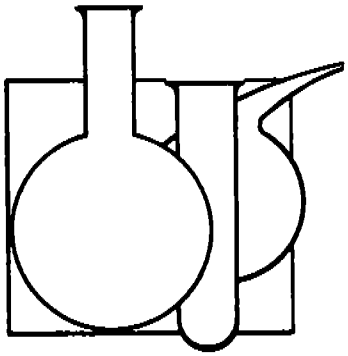

FIELD DATA SHEET

PLANT ABC

LOCATION Coke Oven Stack #4

BARO. PRES. 30.32

RUN # 1

DATE 3/9/81

TIME 9:00

GUARDIAN SYSTEMS INCORPORATED

2610 - 19TH STREET SOUTH
BIRMINGHAM, ALABAMA 35
TELEPHONE 205/879-1850

POINT NO.	TIME MIN	TIME DUR	METER VOL FT.3	STACK TEMP °F	METER TEMP. °F IN	OUT	AVG	IMP TEMP °F	BOX TEMP °F	METER PRESSURE "H_2O	VELOCITY PRESSURE "H_2O	Vacuum Pressure "Hg
Port A	0	2	908.650									
1	2		908.740	365	54	52	53	40	225	.88	.03	1
2	4		910.300	387	66	54	60	42	235	.88	.03	1
3	6		911.3	399	68	56	62	42	240	1.17	.04	1
4	8		912.6	393	68	56	62	42	240	.88	.03	1
5	10		913.7	395	70	56	63	42	245	.88	.03	1
6	12		914.8	398	72	56	64	42	245	.88	.03	1
7	14		915.8	415	72	58	65	42	240	.59	.02	1
8	16		916.6	401	72	58	65	42	240	.59	.02	1
9	18		917.4	403	72	60	66	42	245	.29	.01	1
10	20		918.3	387	72	60	66	42	245	.59	.02	1
11	22		919.4	390	72	60	66	42	245	.88	.03	1
12	24		920.2	395	74	60	67	42	240	.59	.02	1
Port B											1.905	
1	26		921.0	398	68	62	65	44	230	.29	.01	1
2	28		921.9	402	70	62	66	44	230	.29	.01	1
3	30		923.1	413	72	64	68	44	235	.59	.02	1
4	32		923.8	418	72	66	69	44	235	.59	.02	1
5	34		924.5	399	76	66	71	46	230	.29	.01	1
6	36		925.1	403	76	66	71	46	230	.29	.01	1
7	38		926.0	389	76	66	71	46	235	.59	.02	1
8	40		926.9	397	78	66	72	46	235	.59	.02	1
9	42		927.7	401	78	66	72	48	230	.59	.02	1
10	44		928.4	385	78	66	72	48	230	.29	.01	1
11	46		929.1	383	78	66	72	48	230	.29	.01	1
12	48		929.7	367	80	66	73	48	235	.29	.01	1
											1.407	

STATIC PRESSURE "H -1.3

PROBE TIP SIZE

BEFORE .486 .486 .486 AFTE .486 .486 .486

WATER

ml. 20

gram 8.3

Total 28.3

~~FILTER NO.~~ Operator

Scarborough

SAMPLE BOX NO. 6

METER BOX NO. 402

METER ΔH@ 1.78

PITOT, CP .84

TEMP. DEVICE Omega

PROBE LGTH. 10'-2

PROBE LINER SS

PROBE HTR SET. 75

AMBIENT TEMP. 58°

NOTES

Orifice ✓ 7"
Pitot ✓ 7"
Leak ✓ @ 5" Hg

908.650
908.640
.010

CO_2 4%
O_2 15%

FIELD DATA SHEET

GUARDIAN SYSTEMS INCORPORATED
2610 - 19TH STREET SOUTH
BIRMINGHAM, ALABAMA 35209
TELEPHONE 205/879-1850

PLANT: ARC
LOCATION: Stack #4
BARO. PRES.: 30.32
RUN #: 1
DATE: 3/9/81
TIME: 11:10 am

POINT	TIME MIN	TIME DUR	METER VOL FT.3	STACK TEMP °F	METER TEMP. °F IN	METER TEMP. °F OUT	METER TEMP. °F AVG	IMP TEMP °F	BOX TEMP °F	METER PRESSURE "H_2O	VELOCITY PRESSURE "H_2O	Vacuum Pressure "Hg
?tC		2										
	50	1	930.3	407	72	68	70	46	230	.29	.01	1
	52		930.9	412	74	68	71	46	235	.29	.01	1
3	54		931.8	401	74	68	71	46	240	.59	.02	1
4	56		932.5	413	76	68	72	46	240	.29	.01	1
5	58		933.5	397	78	68	73	46	240	.88	.03	1
	60		934.5	390	80	70	75	46	240	.59	.02	1
	62		935.4	395	82	72	77	48	235	.59	.02	1
	64		936.4	388	84	72	78	48	235	.88	.03	1
	66		937.4	400	86	74	80	48	235	.59	.02	1
4	68		938.0	408	88	74	81	48	235	.20	.01	1
1	70		938.7	407	88	74	81	48	230	.29	.01	1
2	72		939.3	401	88	74	81	48	230	.29	.01	1
											~~1.516~~	1.512
?tP												
1	74		940.4	412	80	74	77	46	240	.88	.03	1
2	76		941.3	398	84	74	79	46	240	.59	.02	1
3	78		942.2	398	84	74	79	46	240	.59	.02	1
4	80		943.1	405	84	74	79	46	235	.59	.02	1
5	82		943.7	417	86	76	81	48	235	.29	.01	1
6	84		944.4	401	86	76	81	48	230	.29	.01	1
7	86		945.0	392	86	76	81	48	230	.29	.01	1
8	88		945.9	408	86	76	81	48	235	.59	.02	1
9	90		946.6	402	84	76	80	48	235	.29	.01	1
10	92		947.2	400	84	76	80	48	235	.29	.01	1
11	94		947.8	385	82	78	80	48	235	.29	.01	1
12	96		948.528	365	82	78	80	48	235	.29	.01	1
			39.278	398			72		-26-	.53	~~.122~~	1.435

STATIC PRESSURE "H_2O

PROBE TIP SIZE
BEFORE | AFTER

WATER
ml.
gram
Total

FILTER NO.

SAMPLE BOX NO.
METER BOX NO.
METER ΔH@
PITOT, CP
TEMP. DEVICE
PROBE LGTH.
PROBE LINER
PROBE HTR SET.
AMBIENT TEMP.

NOTES
Pitot ✓ 7"
leak @ 5"Hg
945.615
948.610
.008

6.263
.131

GUARDIAN SYSTEMS INC.
2809 Central Avenue
Birmingham, Alabama 35209
205/879-1850

Run Number 1

Date 3-9-81

Location ABC STACK #4

Amount liquid lost during transport None

Acetone blank volume, ml 400

Acetone wash volume, ml 125

Acetone blank concentration, mg/mg 6.37×10^{-7}

Acetone wash blank, mg 0.2

Filter Collections (mg)		Probe and Cyclone Wash (mg)	
Filter #	R-17	Dish #	6
Gross	268.4	Gross	1530009
Tare	253.0	Tare	1529879
Net	15.4	Acetone Blank	-.1
		Net	12.9

Total Particulate Capture 28.3 mg.

Water		Silica Gel	
Final	340	Final	271.0
Initial	300	Initial	262.7
Net	40	Net	8.3

Total Water 48.3

Approved By [signature]

GUARDIAN SYSTEMS INC

GUARDIAN SYSTEMS INC.
2809 Central Avenue
Birmingham, Alabama 35209
205/879-1850

BACK HALF

Run Number 1

Date 3-9-81

Location ABC STACK #4

Amount liquid lost during transport None

Acetone blank volume, ml 200

Acetone wash volume, ml 340

Acetone blank concentration, mg/mg

Acetone wash blank, mg 0.2

Filter Collections (mg)		Probe and Cyclone Wash (mg)	
Filter #		Dish #	2
Gross		Gross	82005.9
Tare		Tare	81990.6
Net		Acetone Blank	-.3
		Net	15.0

Total Particulate Capture 15.0 mg.

Water		Silica Gel	
Final		Final	
Initial		Initial	
Net		Net	

Total Water

Approved By

FIELD DATA SHEET

GUARDIAN SYSTEMS INCORPORATED
2610 - 19TH STREET SOUTH
BIRMINGHAM, ALABAMA 35209
TELEPHONE 205/879-1850

PLANT: ARC
LOCATION: Stack #4
BARO. PRES.: 30.32
RUN #: 2
DATE: 3/9/81
TIME: 12:25

POINT NO.	TIME MIN	TIME DUR	METER VOL. FT.3	STACK TEMP °F	METER TEMP. °F IN	OUT	AVG	IMP TEMP °F	BOX TEMP °F	METER PRESSURE "H_2O	VELOCITY PRESSURE "H_2O	Vacuum Pressure "Hg
Pt.			948.718									
1	2	2	949.4	401°	68	64	66	46	225°	.29	.01	1
2	4		950.0	409°	68	64	66°	45	230°	.29	.01	1
3	6		950.7	411°	70	66	68°	45	325	.29	.01	1
4	8		951.4	407°	70	68	69°	47	225	.29	.01	1
5	10		952.0	395°	72	68	70°	45	225	.29	.01	1
6	12		952.7	393°	72	68	70°	40	225	.29	.01	1
7	14		953.3	395°	68	74	71°	45	229	.29	.01	1
8	16		954.0	389°	76	68	72	45	225	.59	.02	1
9	18		954.7	399°	68	78	74°	40	230	.29	.01	1
10	20		955.3	381°	68	78	74°	43	225	.29	.01	1
11	22		956.0	397	68	78	74°	45	227	.29	.01	1
12	24		956.6	403	68	78	74	43	230	.29	.01	1
Pt.										.59		
1	26		957.5	411	78	72	75	45	230	.59	.02	1
2	28		958.4	409	78	72	75	45	230	.59	.02	1
3	30		959.3	420	80	72	76	43	225	.59	.02	1
4	32		960.2	411	80	72	76	43	227	.59	.02	1
5	34		961.1	402	82	72	77	45	230	.59	.02	1
6	36		962.0	397	82	72	77	43	227	.59	.02	1
7	38		963.0	391	82	70	78	45	225	.59	.02	1
8	40		963.8	387	82	70	76	42	230	.59	.02	1
9	42		964.7	390	82	72	77	42	230	.59	.02	1
10	44		965.6	403	86	76	81	45	225	.59	.02	1
11	46		966.6	411	86	78	81	42	229	.59	.02	1
12	48		967.4	408	86	78	81	40	230	.59	.02	1

STATIC PRESSURE "H: -1.1

PROBE TIP SIZE
BEFORE: .486 .486 .486
AFTE: .476 .476 .476

WATER
ml. 65
gram 8.0
Total 73.0

~~FILTER NO.~~ Operator: Cusick

SAMPLE BOX NO. 5
METER BOX NO. 400
METER ΔH@ 1.78
PITOT, CP .84
TEMP. DEVICE Omega
PROBE LGTH. 60" L
PROBE LINER S.S.
PROBE HTR SET. 75-80
AMBIENT TEMP. 55°

NOTES
Pitot ck. - 2"
Leak ck @ 5" Hg
948.718
948.700
.018

CO_2 3%
O_2 15%

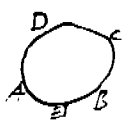

FIELD DATA SHEET

PLANT _____ RUN # 2

LOCATION _____ DATE _____

BARO. PRES. _____ TIME 2:45 pm

GUARDIAN SYSTEMS INCORPORATED
2610 - 19TH STREET SOUTH
BIRMINGHAM, ALABAMA 35209
TELEPHONE 205/879-1850

POINT NO.	TIME MIN	TIME DUR	METER VOL FT. 3	STACK TEMP °F	METER TEMP. °F IN	OUT	AVG	IMP TEMP °F	BOX TEMP °F	METER PRESSURE "H_2O	VELOCITY PRESSURE "H_2O	Vacuum Pressure "Hg
rtC										.59	.02	1
1	50	2	968.2	401	60	74	77	45	225	.59	.02	1
2	52		969.1	403	70	74	77	45	230	.59	.02	1
3	54		970.2	400	80	74	77	45	230	.58	.03	1
4	56		971.3	393	84	76	81	40	230	.58	.03	1
5	58		972.4	390	84	78	81	40	235	.58	.03	1
6	60		973.4	398	84	76	80	45	230	.59	.03	1
7	62		974.3	402	84	76	80	40	225	.59	.02	1
8	64		975.0	411	84	76	80	40	225	.59	.02	1
9	66		975.5	407	82	76	79	45	225	.29	.01	1
10	68		976.1	409	87	74	85	45	225	.29	.02	1
11	70		976.8	397	87	74	85	40	230	.29	.02	1
12	72		977.3	397	82	76	84	40	230	.29	.01	1
rtD												1.700
1	74		978.0	409	72	68	70	40	225	.29	.01	1
2	76		978.6	414	72	68	70	40	225	.29	.01	1
3	78		979.3	402	74	72	74	40	230	.29	.01	1
4	80		980.0	389	76	72	74	45	225	.29	.01	1
5	82		980.6	392	76	74	76	40	230	.29	.01	1
6	84		981.3	387	74	74	76	40	230	.29	.01	1
7	86		982.0	391	74	80	77	45	225	.29	.01	1
8	88		982.7	406	80	76	78	45	225	.29	.01	1
9	90		983.3	402	80	76	78	40	230	.29	.01	1
10	92		984.0	397	80	74	77	40	230	.29	.01	1
11	94		984.6	407	80	74	77	45	225	.29	.01	1
12	96		985.324	404	80	74	77	40	225	.29	.01	1
			36.606	398			78	43.9		.42	.122	

STATIC PRESSURE "H;

PROBE TIP SIZE
BEFORE AFTE

WATER
ml. _____
gram _____
Total _____

FILTER NO.

SAMPLE BOX NO. _____
METER BOX NO. _____
METER ΔH@ _____
PITOT, CP _____
TEMP. DEVICE _____
PROBE LGTH. _____
PROBE LINER _____
PROBE HTR SET. _____
AMBIENT TEMP. _____

NOTES

Pitot ✓ 7"
leak'ch @ 5" Hg
985.435
985.420
.015

GUARDIAN SYSTEMS INC.
2809 Central Avenue
Birmingham, Alabama 35209
205/879-1850

Run Number 2

Date 3-9-81

Location ABC STACK #4

Amount liquid lost during transport NONE

Acetone blank volume, ml 400

Acetone wash volume, ml 200

Acetone blank concentration, mg/mg 6.37×10^{-7}

Acetone wash blank, mg 0.2

Filter Collections (mg)		Probe and Cyclone Wash (mg)	
Filter #	R-18 & R-16	Dish #	8
Gross	562.5	Gross	144380.3
Tare	509.9	Tare	144336.7
Net	52.6	Acetone Blank	-.1
		Net	43.5

Total Particulate Capture 96.1 mg.

Water		Silica Gel	
Final	365	Final	264.3
Initial	300	Initial	256.3
Net	65	Net	8.0

Total Water 73.0

Approved By [signature]

GUARDIAN SYSTEMS INC.
2809 Central Avenue
Birmingham, Alabama 35209
205/879-1850

BACK HALF

Run Number 2

Date 3-9-81

Location ABC STACK #4

Amount liquid lost during transport None

Acetone blank volume, ml 200

Acetone wash volume, ml 365

Acetone blank concentration, mg/mg

Acetone wash blank, mg 0.2

Filter Collections (mg)		Probe and Cyclone Wash (mg)	
Filter #		Dish #	4
Gross		Gross	79678.5
Tare		Tare	79600.6
Net		Acetone Blank	-.4
		Net	77.5

Total Particulate Capture 77.5 mg.

Water		Silica Gel	
Final		Final	
Initial		Initial	
Net		Net	

Total Water

Approved By

FIELD DATA SHEET

PLANT ABC

LOCATION Coke Oven

BARO. PRES. 30.32

RUN # 3

DATE 3/9/81

TIME 325

GUARDIAN SYSTEMS INCORPORATED

2610 - 19TH STREET SOUTH
BIRMINGHAM, ALABAMA 35209
TELEPHONE 205/879-1850

POINT NO.	TIME MIN	TIME DUR	METER VOL FT.3	STACK TEMP °F	METER TEMP. °F IN	METER TEMP. °F OUT	METER TEMP. °F AVG	IMP TEMP °F	BOX TEMP °F	METER PRESSURE "H_2O	VELOCITY PRESSURE "H_2O	Vacuum Pressure "Hg
Start A			985.505									10
1	2	2	986.2	392	70	66	68	40	225	.29	.01	1
2	4		986.9	381	70	66	68	40	225	.29	.01	1
3	6		987.6	367	70	66	66	45	230	.29	.01	1
4	8		988.3	391	72	66	74	45	230	.29	.01	1
5	10		988.9	390	72	66	74	40	225	.29	.01	1
6	12		989.6	407	74	66	70	40	225	.29	.01	1
7	14		990.3	409	74	66	70	45	230	.29	.01	1
8	16		991.0	390	74	66	70	45	230	.29	.01	1
9	18		991.7	411	76	70	73	45	230	.29	.01	1
10	20		992.4	411	76	70	74	40	225	.29	.01	1
11	22		993.0	406	80	70	75	40	230	.29	.01	1
12	24		993.7	401	80	70	75	45	230	.29	.01	1
Start B												
1	26		994.4	396	80	72	76	45	235	.29	.01	1
2	28		995.1	403	80	72	76	45	235	.29	.01	1
3	30		995.8	417	82	72	77	45	230	.29	.01	1
4	32		996.5	411	84	72	78	45	230	.29	.01	1
5	34		997.2	402	84	72	78	45	225	.29	.01	1
6	36		997.9	392	84	72	78	40	225	.29	.01	1
7	38		998.6	397	84	74	79	40	225	.29	.01	1
8	40		999.2	397	84	74	79	45	225	.29	.01	1
9	42		000.0	406	84	74	79	45	230	.29	.01	1
10	44		000.6	411	84	74	79	45	235	.29	.01	1
11	46		001.3	399	84	74	81	40	235	.29	.01	1
12	48		002.0	397	84	74	81	40	230	.29	.01	1

STATIC PRESSURE "H -1.2

PROBE TIP SIZE

BEFORE .486 .486 .486 AFTE .486 .486 .486

WATER

ml. 55

gram 10.5

Total 65

~~FILTER NO.~~ operator Cusick

SAMPLE BOX NO. 6

METER BOX NO. 4

METER ΔH@ 1.79

PITOT, CP .84

TEMP. DEVICE Omega

PROBE LGTH. 12.2

PROBE LINER SS

PROBE HTR SET. 300

AMBIENT TEMP. 60

NOTES

Pitot ✓ 7"

Leak ✓ @ 5"

985.515
985.505
.010

CO_2 4%

O_2 15%

FIELD DATA SHEET

PLANT ABC

LOCATION Coke Oven

BARO. PRES.

RUN # 3

DATE 3/9/81

TIME

GUARDIAN SYSTEMS INCORPORATED
2610 - 19TH STREET SOUTH
BIRMINGHAM, ALABAMA 35209
TELEPHONE 205/879-1850

POINT NO.	TIME MIN	TIME DUR	METER VOL FT. 3	STACK TEMP °F	METER TEMP. °F IN	OUT	AVG	IMP TEMP °F	BOX TEMP °F	METER PRESSURE "H_2O	VELOCITY PRESSURE "H_2O	Vacuum Pressure "Hg
Pit C		2						40	225	.29	.01	1
1	50		0027	392	85	75	83	40	225	.29	.01	1
2	52		0033	390	86	78	83	40	225	.29	.01	2
3	54		0040	397	86	75	83	45	230	.29	.01	2
4	56		004.7	406	88	74	83	45	230	.29	.01	2
5	58		005.4	411	88	75	83	45	230	.29	.01	2
6	60		006.1	402	90	74	83	40	230	.29	.01	2
7	62		006.4	407	46	80	84	40	230	.29	.01	5
8	64		007.4	393	48	80	84	45	225	.29	.01	5
9	66		008.1	402	88	80	84	45	225	.29	.01	5
10	68		008.8	367	88	80	84	40	225	.29	.01	7
11	70		009.4	389	90	80	82	40	230	.29	.01	7
12	72		010.1	389	84	80	82	45	230	.29	.01	7
~~Pit D~~			~~010.8~~									~~1~~
1	74		010.8	387	84	80	82	45	225	.29	.01	1
2	76		011.5	392	84	80	82	40	225	.29	.01	1
3	78		012.2	395	84	80	82	40	225	.29	.01	1
4	80		012.9	406	84	80	82	40	230	.29	.01	1
5	82		013.5	411	84	80	82	40	230	.29	.01	1
6	84		014.3	403	85	80	84	45	230	.29	.01	1
7	86		015.0	403	82	80	84	45	230	.29	.01	1
8	88		015.6	395	88	80	84	45	225	.29	.01	1
9	90		016.3	397	92	82	87	40	225	.29	.01	1
10	92		017.0	397	92	82	87	40	225	.29	.01	1
11	94		017.7	402	92	87	87	45	230	.29	.01	1
12	96		018.422	392	92	87	87	45	230	.29	.01	1
			32.907 ✓	398 ✓			80 ✓			.29 ✓	.100 ✓	

STATIC PRESSURE "H_2O

PROBE TIP SIZE

BEFORE AFTER

WATER

ml.

gram

Total

FILTER NO.

SAMPLE BOX NO.

METER BOX NO.

METER ΔH@

PITOT, CP

TEMP. DEVICE

PROBE LGTH.

PROBE LINER

PROBE HTR SET.

AMBIENT TEMP.

NOTES

018.520
018.507

Leak 013
Pitot Ck Q ✓

Filter change @ 72 min.
.010 LK ✓

GUARDIAN SYSTEMS INC.
2809 Central Avenue
Birmingham, Alabama 35209
205/879-1650

Run Number 3

Date 3-9-81

Location ABC STACK #4

Amount liquid lost during transport NONE

Acetone blank volume, ml 400

Acetone wash volume, ml 170

Acetone blank concentration, mg/mg 6.37x10-7

Acetone wash blank, mg 0.2

Filter Collections (mg)		Probe and Cyclone Wash (mg)	
Filter #	R-14+R-15	Dish #	4-1
Gross	550.1	Gross	142976.6
Tare	510.0	Tare	142955.8
Net	40.1	Acetone Blank	-.1
		Net	20.7

Total Particulate Capture 60.8 mg.

Water		Silica Gel	
Final	355	Final	273.3
Initial	300	Initial	263.3
Net	55	Net	10.0

Total Water 65

Approved By [signature]

GUARDIAN SYSTEMS INC.
2909 Central Avenue
Birmingham, Alabama 35209
205/879-1850

BACK HALF

Run Number 3

Date 3-9-81

Location ABC STACK #4

Amount liquid lost during transport NONE

Acetone blank volume, ml 200

Acetone wash volume, ml 355

Acetone blank concentration, mg/mg

Acetone wash blank, mg 0.2

Filter Collections (mg)		Probe and Cyclone Wash (mg)	
Filter #		Dish #	7
Gross		Gross	82499.4
Tare		Tare	82468.3
Net		Acetone Blank	-.4
		Net	30.7

Total Particulate Capture 30.7 mg.

Water		Silica Gel	
Final		Final	
Initial		Initial	
Net		Net	

Total Water

Approved By

Calibrations

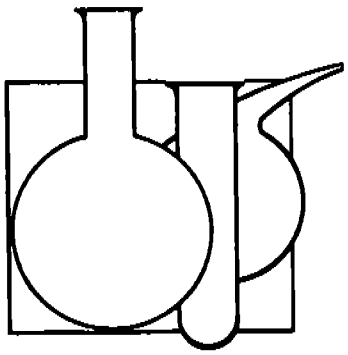

VI. CALIBRATIONS

General

The meter box was recalibrated upon return to the laboratory from this test. Using the average meter pressure, the box was calibrated at the closest point (for an average meter pressure of 0.41 a 0.50 "H_2O was used as the calibration point). These calibrations produced a single point of MCF and ΔH@ which was compared to the original calibration. All were within the 5% allowed at the highest vacuum seen. This new MCF was applied against all meter volumes in these tests. These calibration sheets are located behind the original calibration sheets.

The equipment used was as follows:

Probe: 10-2

Box: 400

Stack Temperature: OMEGA

Sample Box: OLD 5 and 6

The average temperature of the stack was 398 °F. The L&N #1 was recalibrated at 400 °F and agreed within 1.5% of the initial calibration value.

Type A
Glass Fiber Filters

FEATURES

■ High tensile strength. ■ Excellent handling characteristics. ■ Good wetting properties. ■ Minimum of 99.9% retention for particles of .3 μm as determined by DOP tests. ■ Binder free.

This is the original glass fiber filter pioneered by Gelman Instrument Company over 15 years ago. It continues to be widely used for high volume sampling. Since zinc is one of the raw materials incorporated in the glass fibers, Type A Filters have a variable zinc content. Another component of the filter, sulfuric acid, is used as a dispersion medium, making the sheets unsuitable for measurement of sulfates.

Type A Glass Fiber Filters are less likely to develop static charge or tear than other glass fiber media types. They are used extensively in applications where zinc and iron content is not important, or where sulfate content is not being determined.

Size	37 mm	47 mm	102 mm	8"x10"
Product No.	61715	61694	61696	61701
Filters/Pkg.	500	100	100	100

TYPE A GLASS FIBER FILTER SPECIFICATION REPORT

The following physicochemical properties represent typical, average values obtained in accordance with accepted test methods. They are subject to normal manufacturing variations and are supplied as a technical service. *The analysis has been made in accordance with EPA procedures (micrograms/8" x 10" sheet).*

ELEMENTS:

Antimony	30	Manganese	200
Arsenic	30	Mercury	100
Beryllium	1	Molybdenum	10
Bismuth	10	Nickel	10
Cadmium	5	Selenium	5000
Chromium	10	Tin	10
Cobalt	10	Titanium	170
Copper	2	Vanadium	10
Iron	2300	Zinc	5000 to 25,000
Lead	20		

OTHER PHYSICALS:

BSO	522	Flow Resistance (Max.) @ 320 cm/min.	80 mm
*pH	8.5	Flow Rate (air) lpm/cm² @ 70 cm Hg	50
DOP @320/cm/min (ASTM Method 2986)	99.9%	Max. Use Temp	400°C
Tensile Strength (Fed Spec UUP31B)	750 gr	Static Properties	Low
Weight 8"x10" sheet	4.0±.3 gr.	Ability to Fold	Excellent

WATER EXTRACTABLE IONS

Sulfate	100	Chloride	1500
Nitrate	50	Fluoride	15
Ammonia	20		

*pH - Gelman procedure

A - Soak in distilled water

B - Add 15 drops saturated KCl solution

C - Shred one 8"x10" sheet and soak in prepared water for one hour

D - Run pH at ambient temperature

Type A/E
Glass Fiber Filters

FEATURES

■ Low trace metals. ■ Medium Handling characteristics. ■ Available in all sizes. ■ Minimum of 99.9% retention for particles of .3 μm as determined by DOP tests. ■ Binder free.

Type A/E Glass Fiber Filters are composed of low acid soluble glass fiber. They contain low levels of both zinc and iron. The filters do react with atmospheric sulfur dioxide; and therefore, when high levels of sulfur are expected, correct [illegible] this reaction should be accounted for.

Type A/E Glass Fiber Filters are binder free and ideal for gravimetric analysis of air pollutants. This pure, organic free filter is the basis for procedures widely used in determining municipal and industrial air polluting substances.

Size	25 mm	37 mm	47 mm	102 mm	8"x10"
Product No.	61630	61652	61631	61633	61638
Filters/Pkg.	500	500	100	100	100

TYPE A/E GLASS FIBER FILTER SPECIFICATION REPORT

The following physicochemical properties represent typical, average values obtained in accordance with accepted test methods. They are subject to normal manufacturing variations and are supplied as a technical service. *The analysis has been made in accordance with EPA procedures (micrograms/8" x 10" sheet).*

ELEMENTS:

Antimony	20	Manganese	2
Arsenic	20	Mercury	80
Beryllium	1	Molybdenum	10
Bismuth	10	Nickel	10
Cadmium	2	Selenium	200
Chromium	10	Tin	10
Cobalt	10	Titanium	10
Copper	2	Vanadium	10
Iron	100-1800	Zinc	90
Lead	10		

OTHER PHYSICALS:

BSO	522	Flow Resistance (Max.) @ 320 cm/min.	60 mm
*pH	9.0	Flow Rate (air) lpm/cm² @ 70 cm Hg	60
DOP (@320/cm/min ASTM Methods 2986)	99.9%	Max. Use Temp.	400 C
Tensile Strength (Fed Spec UUP31B)	600 gr.	Static Properties	Medium
Weight 8"x10" sheet	4.0±.3 gr.	Ability to Fold	Good

WATER EXTRACTABLE IONS:

Sulfate	600	Chloride	1500
Nitrate	115	Fluoride	87
Ammonia	13		

*pH - Gelman procedure

A - Soak in distilled water

B - Add 15 drops saturated KCl solution

C - Shred one 8"x10" sheet and soak in prepared water for one hour

D - Run pH at ambient temperature

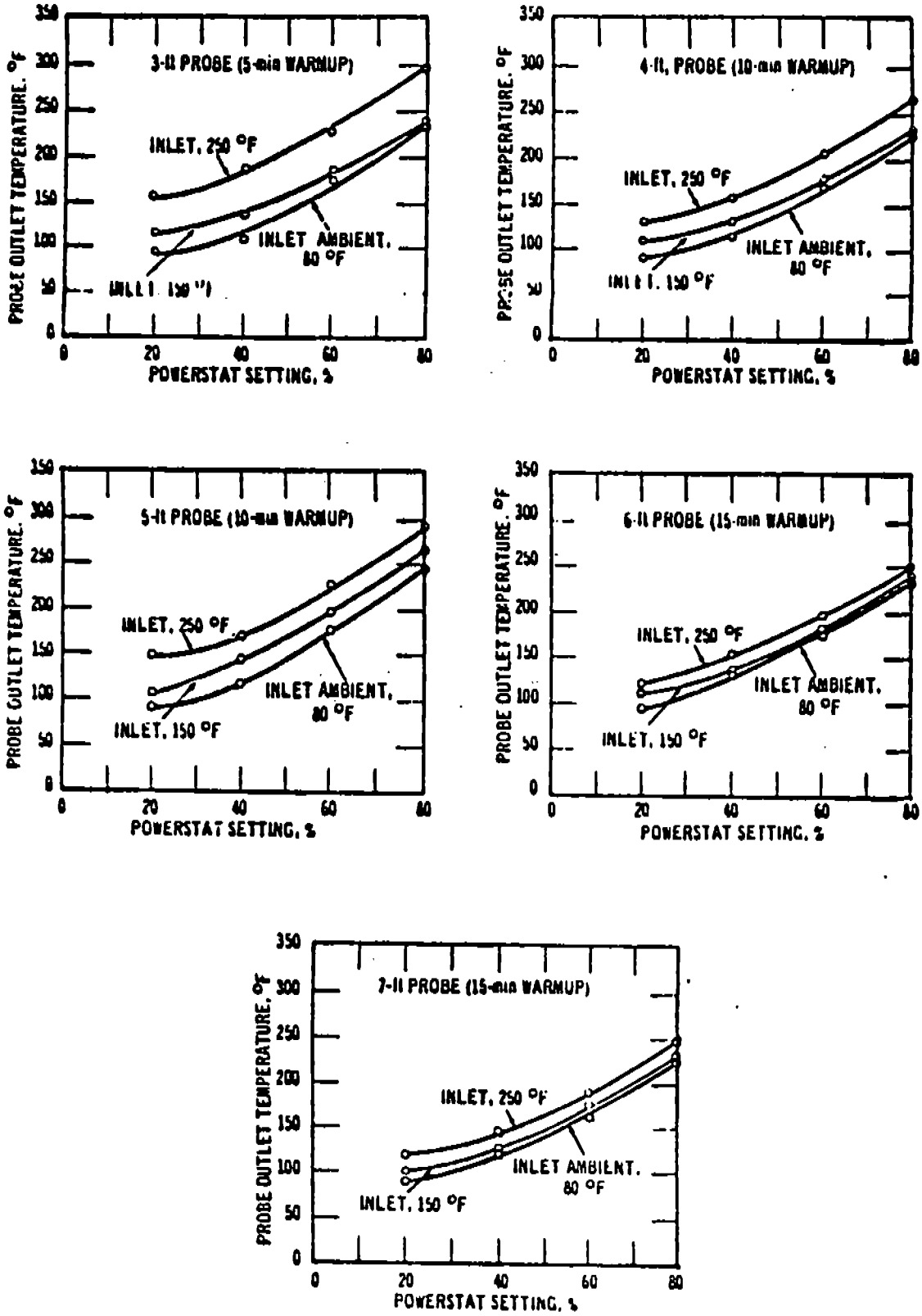

NOTE: Flow rate held constant at 0.75; 50% change in flow rate has little effect on probe temperature.

Figure 16

Probe Temperatures

METER CALIBRATION FORM

Date 12/30/80 Box No. 400

P_{bar} = 30.18 in. Hg Calibrated by Jim Denton

ns min)	Orifice Manometer Setting ΔH (in. H_2O)	Δ wtm (in. H_2O)	Gas Volume Wet Test Meter Initial	Gas Volume Wet Test Meter Final	Gas Volume Dry Gas Meter Initial	Gas Volume Dry Gas Meter Final	Temperature Wet Test Meter Initial	Temperature Wet Test Meter Final	Avg. Temp. Dry Gas Meter Inlet	Avg. Temp. Dry Gas Meter Outlet
5	.5 Vac 10" Hg	-.40	868.582	874.663	546.210	552.238	18.4	18.4	76/92	70/74
5	1.0 10"	-.60	875.424	883.918	552.729	561.276	18.4	18.4	88/100	76/82
15	1.5 10"	-.70	884.776	894.890	561.872	572.224	18.4	18.3	96/108	82/86
5	2.0 10"	-.90	895.436	907.325	572.522	584.653	18.3	18.3	100/106	86/90
5	2.5 10"	-1.15	907.932	921.240	585.277	599.072	18.3	18.2	102/108	90/92

Pump must be operated for at least 15 minutes at each ΔH setting (.5, 1, 1.5, 2 and 3)

T_{dgm} = average temperature of dry gas meter (inlet and outlet) + 460°F

T_{wtm} = average temperature of wet test meter + 460°F

$$P_{wtm} = P_{bar} - \frac{\Delta wtm}{13.6}$$

$$P_{dgm} = P_{bar} + \frac{\Delta H}{13.6}$$

Δwtm = pressure on wet test meter in inches of H_2O

Y = meter calibration factor

28.316 =conversion factor when using a wet test meter calibrated in liters

Calculations

$$Y = \frac{(\text{wet final} - \text{wet initial})(T_{dgm})(P_{wtm})}{(\text{dry final} - \text{dry initial})(28.316)(T_{wtm})(P_{dgm})} \text{ or } (1)$$

$$\bar{Y} = \frac{\Sigma Y}{5}$$

Meter Tolerance = 1.00 ± 0.01

If the meter calibration factor is not within the allowable tolerance, the calibration factory Y may be used to mathematically correct the gas meter dial readings to the proper values instead of physically adjusting the dry gas meter dials to correspond to the wet test meter readings.

METER CALIBRATION FORM

Date 3/18/81 Box No. 400

P_{bar} = 29.90 in. Hg Calibrated by LOTZ

Orifice Manometer Setting ΔH (in. H_2O)	Δ wtm (in. H_2O)	Gas Volume Wet Test Meter		Gas Volume Dry Gas Meter		Temperature Wet Test Meter		Avg. Temp. Dry Gas Meter	
		Initial	Final	Initial	Final	Initial	Final	Inlet	Outlet
.5 @ 10" Hg	-0.40	619.006	625.188	522.597	528.798	16.5	16.5	72/94	66/72
.5 @ 10" Hg	-0.40	625.188	631.290	528.798	535.032	16.5	16.5	84/90	72/78
.5 @ 10" Hg	-0.40	631.290	637.358	535.032	541.331	16.5	16.5	88/92	76/78

Pump must be operated for at least 15 minutes at each ΔH setting (.5, 1, 1.5, 2 and 3)

T_{dgm} = average temperature of dry gas meter (inlet and outlet) + 460°F

T_{wtm} = average temperature of wet test meter + 460°F

$$P_{wtm} = P_{bar} - \frac{\Delta wtm}{13.6}$$

$$P_{dgm} = P_{bar} + \frac{\Delta H}{13.6}$$

.9984
.9940
.9977
.9967 = 1.00

Δwtm = pressure on wet test meter in inches of H_2O

Y = meter calibration factor

28.316 =conversion factor when using a wet test meter calibrated in liters

Calculations

$$Y = \frac{(\text{wet final - wet initial})(T_{dgm})(P_{wtm})}{(\text{dry final - dry initial})(28.316)(T_{wtm})(P_{dgm})}$$

or (1)

$$\bar{Y} = \frac{\Sigma Y}{5}$$

Meter Tolerance = 1.00 ± 0.01

If the meter calibration factor is not within the allowable tolerance, the calibration factory Y may be used to mathematically correct the gas meter dial readings to the proper values instead of physically adjusting the dry gas meter dials to correspond to the wet test meter readings.

ORIFICE CALIBRATION FORM

Date 12/30/80 Meter Box No. 400

P_{bar} 30.18 Calibrated By Jim Denton

ΔH	V_1	V_2	θ	t_1	t_2	$V_2 - V_1$	Q_m	K_m
in. H_2O	CF	CF	Sec.	°F	°F	CF		
.5	546.210	552.238	900	82	72	6.028	.4013	.7284
1.0	552.729	561.276	900	94	79	8.547	.5670	.7234
1.5	561.872	572.224	900	102	84	10.352	.6805	.7061
2.0	572.522	584.653	900	103	88	12.131	.8047	.7208
2.5	585.277	599.072	900	105	91	13.795	.9042	.7229
							Average K_m	.7203

V_1 = Dry gas meter reading at the start of each test

V_2 = Dry gas meter reading at the end of each test

$\Delta H_a = 1.78$

t_1 = Dry gas meter inlet temperature

t_2 = Dry gas meter outlet temperature

Calculations

1. Q_m = (for each ΔH) $\quad \dfrac{V_2 - V_1}{\Theta} \left[\dfrac{t_2 + 460}{\dfrac{t_1 + t_2}{2} + 460} \right] (60)(Y)$

1.008
1.009
1.002
1.009
.996
1.004 = 1.00

2. K_m = (for each ΔH) $\quad Q_m \sqrt{\dfrac{P_m M_m}{T_m \Delta H}}$

$M_m = 29$
$T_m = t_2 + 460$
$P_m = P_{bar} + \dfrac{\Delta H}{13.6}$

Y = meter calibration factor

3. Calculate the average K_m as follows:

$$\bar{K}_m = \frac{\Sigma K_m}{5}$$

4. Calculate ΔH_a as follows:

$$\Delta H_a = \frac{Q@^2 \; P@ \; M@}{T@} \left[\frac{1}{\bar{K}_m^2} \right] = \frac{0.921}{\bar{K}_m^2}$$

Q@ = 0.75 cfm
T@ = 528°R
P@ = 29.92 in.Hg
M@ = 29

5. Orifice Tolerance = 1.84 ± .25

ORIFICE CALIBRATION FORM

Date 3/18/81 Meter Box No. 400

P_{bar} 29.90 Calibrated By LOTZ

ΔH	V_1	V_2	θ	t_1	t_2	$V_2 - V_1$	Q_m	K_m
in. H_2O	CF	CF	Sec.	°F	°F	CF		
0.5			900	78	69	6.201	.4092	.7414
0.5			900	87	75	6.234	.4085	.7360
0.5			900	90	77	6.299	.4140	.7444
							Average K_m	.7406

V_1 = Dry gas meter reading at the start of each test

V_2 = Dry gas meter reading at the end of each test

t_1 = Dry gas meter inlet temperature

t_2 = Dry gas meter outlet temperature

1.68

Calculations

1. Q_m = (for each ΔH)

$$\frac{V_2 - V_1}{\Theta}\left[\frac{t_2 + 460}{\frac{t_1 + t_2}{2} + 460}\right](60)(Y)$$

2. K_m = (for each ΔH)

$$Q_m\sqrt{\frac{P_m M_m}{T_m \Delta H}}$$

$M_m = 29$
$T_m = t_2 + 460$
$P_m = P_{bar} + \frac{\Delta H}{13.6}$

Y = meter calibration factor

3. Calculate the average K_m as follows:

$$\bar{K}_m = \frac{\Sigma K_m}{5}$$

4. Calculate ΔH_a as follows:

$$\Delta H_a = \frac{Q@^2\ P@\ M@}{T@}\left[\frac{1}{\bar{K}_m^2}\right] = \frac{0.921}{\bar{K}_m^2}$$

Q@ = 0.75 cfm
T@ = 528°R
P@ = 29.92 in.Hg
M@ = 29

5. Orifice Tolerance = 1.84 ± .25

GUARDIAN SYSTEMS INC

GUARDIAN SYSTEMS inc

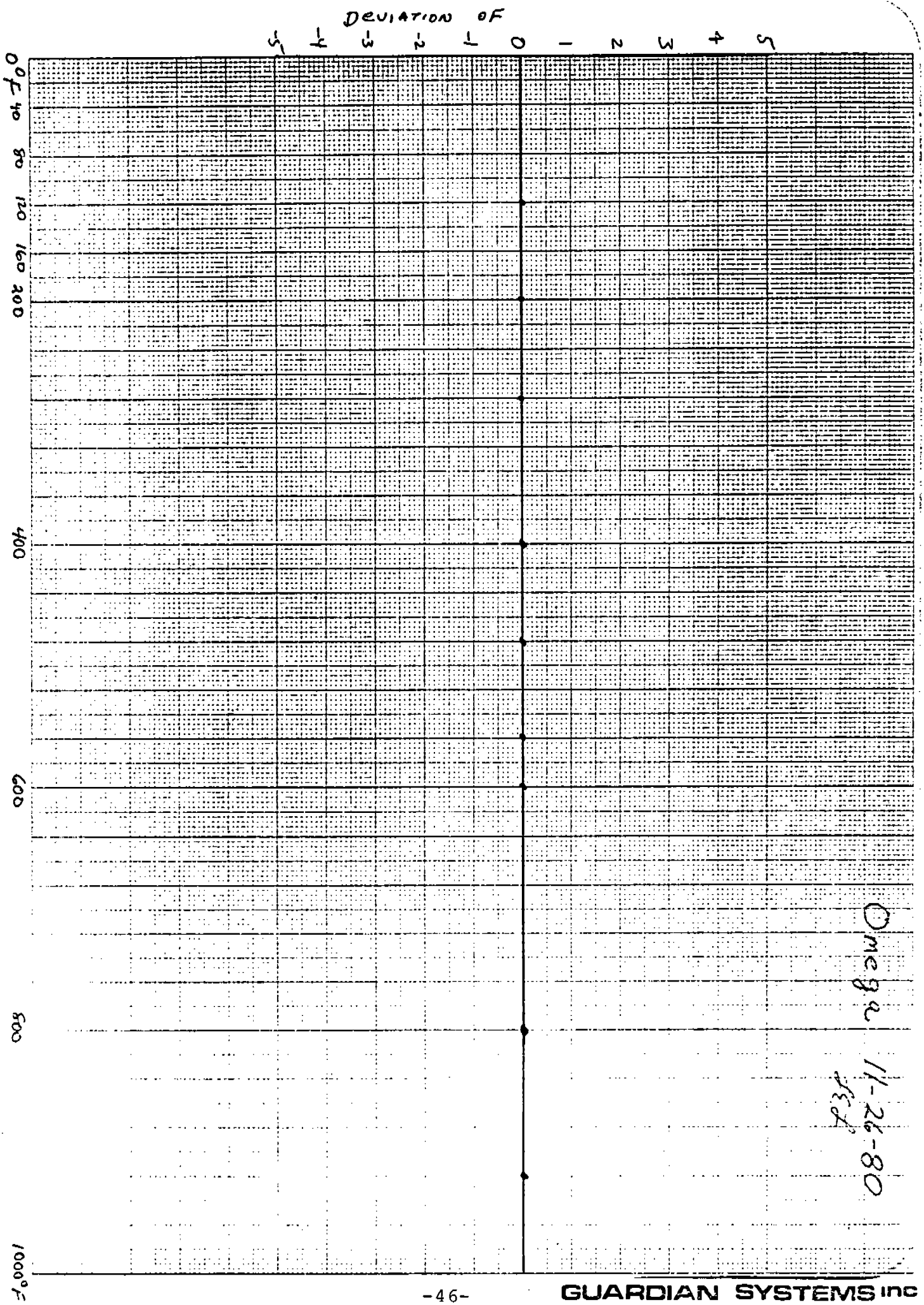
DEVIATION OF
-5 -4 -3 -2 -1 0 1 2 3 4 5
0°F 40 80 120 160 200
400
600
800
1000°F
Omega
11-26-80

GUARDIAN SYSTEMS inc

PITOT CALIBRATION FORM

Date 12/11/80 Probe # 10-2

Calibrated By J.D. + R.S.

Nozzle Size —

SIDE A

Run #	ΔP_{std} (in. H_2O) Standard	$\Delta P(s)$ (in. H_2O) Type "s"	$C_p(s)$	Deviation $C_p(s) - \overline{C}_p(A)$
1	.71	.99	.843	.001
2	.70	.97	.841	.001
3	.70	.97	.841	.001
		$\overline{C}_p(A)$	.842	

SIDE B

Run #	ΔP_{std} (in. H_2O) Standard	$\Delta P(s)$ (in. H_2O) Type "s"	$C_p(s)$	Deviation $C_p(s) - \overline{C}_p(B)$
1	.71	.98	.843	.001
2	.72	.99	.844	.002
3	.72	1.0	.840	.002
		$\overline{C}_p(B)$	.842	

CALCULATIONS

$$C_p(s) = C_{p(std)} \text{ (or 0.99)} \sqrt{\frac{\Delta P_{std}}{\Delta P(s)}}$$

$$\text{Average Deviation} = \frac{\Sigma \left| C_p(s) - \overline{C}_p(A \text{ or } B) \right|}{3} \longleftarrow \text{Must be} \leq 0.01$$

$$\left| \overline{C}_p(A) - \overline{C}_p(B) \right| \longleftarrow \text{Must be} \leq 0.01 \qquad .00$$