Note: This is a reference cited in *AP 42, Compilation of Air Pollutant Emission Factors, Volume I Stationary Point and Area Sources.* AP42 is located on the EPA web site at www.epa.gov/ttn/chief/ap42/

The file name refers to the reference number, the AP42 chapter and section. The file name "ref02_c01s02.pdf" would mean the reference is from AP42 chapter 1 section 2. The reference may be from a previous version of the section and no longer cited. The primary source should always be checked.

PARTICULATE EMISSION MEASUREMENT ON #2 COKE OVEN BATTERY AT UNITED STATES STEEL CORPORATION FAIRFIELD, ALABAMA

Prepared for
United States Steel Corporation
Fairfield, Alabama

Prepared by
CH2M HILL
807 South McDonough Street
Montgomery, Alabama 36104

January 1979

Project No. MG63304.90

TABLE OF CONTENTS

Chapter		Page
1	INTRODUCTION	1-1
2	SUMMARY OF RESULTS	2-1
3	SAMPLING AND ANLYTICAL PROCEDURE	3-1

APPENDIX

LIST OF TABLES

Table		Page
2-1	SUMMARY OF TEST RESULTS	2-2
3-1	LOCATION OF SAMPLING POINTS	3-3

LIST OF FIGURES

Figure		Page
3-1	PARTICULATE SAMPLING TRAIN	3-2
3-2	LOCATION OF SAMPLING PORTS	3-3

CHAPTER 1
INTRODUCTION

The purpose of this study was to measure the concentration of particulate matter in the exhaust gases from the underfiring stack serving the #2 coke oven battery at U.S. Steel in Fairfield, Alabama. The underfiring stack receives the combustion products of the by-product gas which is burned to supply heat for the coking process. These tests were performed at the request of U.S. Steel exclusively for their own use.

The particulate samples were collected on January 16 and 17, 1979. Mr. Gary Euler of U.S. Steel's Engineering Department coordinated the sampling with process operation. Bill Morgan and Alan Todd of CH2M HILL conducted the tests.

CHAPTER 2
SUMMARY OF RESULTS

Table 2-1 is a summary of the various parameters measured during the three particulate runs conducted on the under-firing stack serving the #2 coke oven battery at U.S. Steel. As shown in this table, the average grain loading measured during these tests was 0.0276 gr/sdcf.

Table 2-1
Summary of Test Results - U.S. Steel Coke Plant

Parameter	Run 1	Run 2	Run 3	Average
Date of Test	1/16/79	1/17/79	1/17/79	
Sampling Period (Time of Day)	1557-1823	0920-1234	1424-1614	
Stack Gas Temperature (°F)	363	373	386	374
Moisture Content (% Vol)	12.9	12.4	12.9	12.7
Stack Gas Velocity (fps)	9.24	8.86	9.32	9.14
Gas Volumetric Flow Rate (SDCFH)[a]	5,892,488	5,606,859	5,750,970	5,750,106
Particulate Emissions (Grains/SDCF)	0.0226	0.0295	0.0306	0.0276
Particulate Emissions (lbs/hour)	19.0	23.7	25.2	22.6
Percent of Isokinetic Sampling	111.9	108.1	108.9	

[a] Dry basis, standard conditions of 70°F and 29.92" Hg

CHAPTER 3
SAMPLING AND ANALYTICAL PROCEDURES

Sampling Location and Procedures

An EPA sampling train as described in the Air Pollution Control Office publication, APTD-0581, was used for collecting the particulate samples. Figure 3-1 shows a schematic of this sampling equipment. The only modification to this basic configuration was the substitution of a glass right angle for the cyclone and flask.

Layout of the sampling ports in relation to flow disturbances for the stack is shown by Figure 3-2. Based on the stack diameter and the upstream and downstream distances of the sampling ports from the closest flow disturbances, the required number of sampling points according to Figure 1-1 and Method 1 of the August 18, 1977, Federal Register, Volume 42, was determined to be 44. Sampling was conducted through four ports at these 44 points for two minutes per point for Runs 1 and 3 and three minutes per point for Run 2. Table 3-1 shows the dimensions from the stack wall to each sampling point as directed by the previously mentioned Federal Register.

Prior to the start of the first particulate sampling run, stack temperature was measured and a velocity traverse was made in the stack. Moisture was estimated based on sampling data from similar sources. Using the above data, the nomograph was set up to utilize an appropriate size nozzle. Settings for the nomograph and the exact nozzle diameter are shown on the field data sheets (Appendix).

The particulate sampling procedures followed were as outlined by Method 5 from the previously mentioned Federal Register. Sampling data for each run is a part of the Appendix. Acceptable isokinetic sampling rates were achieved during Runs 2 and 3 as indicated by the data summary sheet of Chapter 2; however, the rate for Run 1 was slightly above the acceptable limit of 110% due to an estimation error before the run of the moisture percentage. Calculations for the isokinetic rates are also a part of the Appendix.

Analytical Procedures

Particulate sample recovery procedures were as outlined in Method 5 of the Federal Register. Acetone was used to wash down all parts of the sampling train prior to the glass fiber filter. A probe brush was utilized to ensure that the probe was properly cleansed following each run, and the nozzle was removed at the conclusion of each run and cleaned with a nozzle brush. Laboratory data for all runs are a

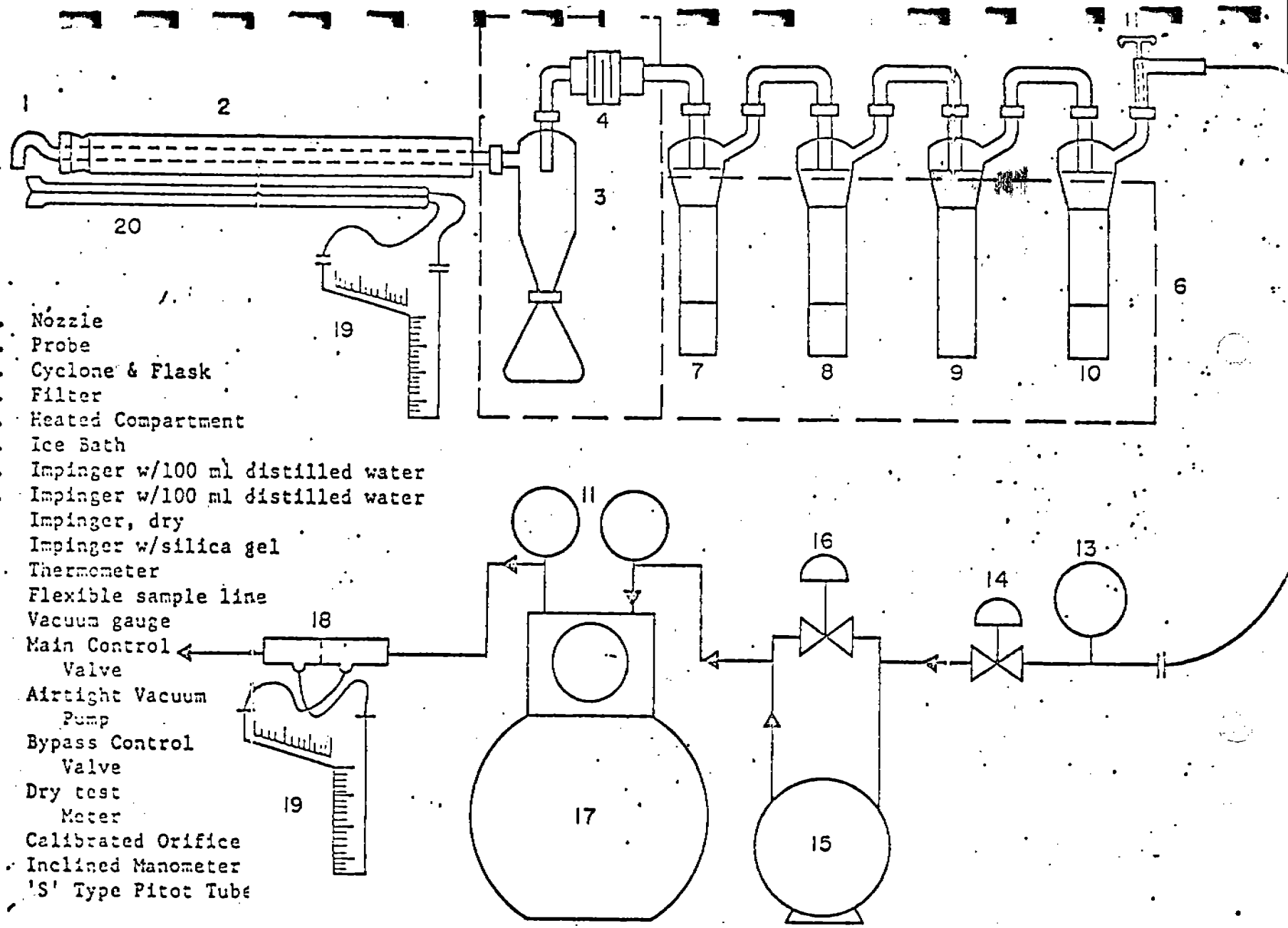

FIGURE 3-1. PARTICULATE SAMPLING TRAIN

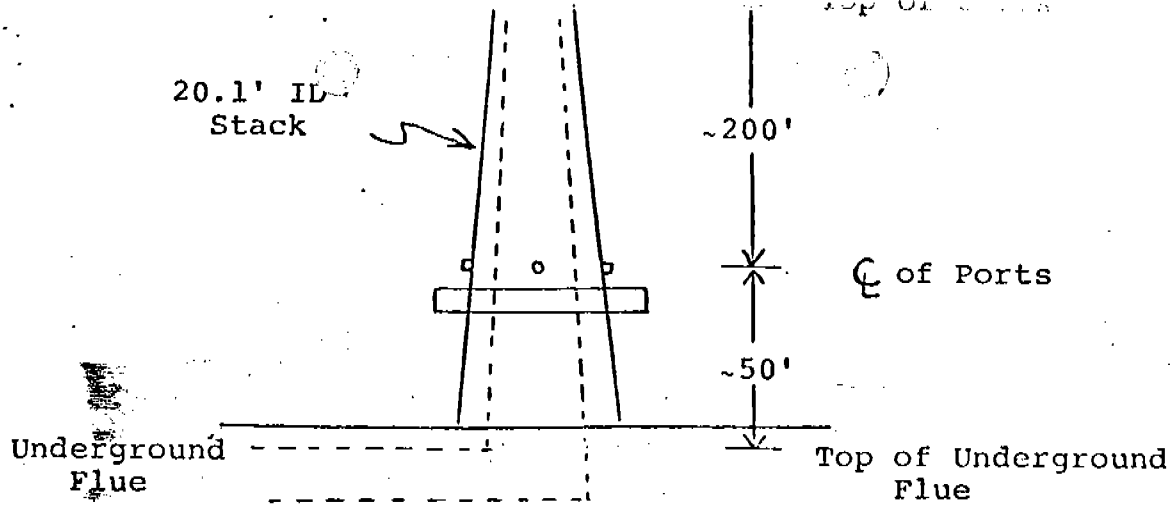

FIGURE 3-2
LOCATION OF SAMPLING PORTS

Table 3-1
Location of Sampling Points

Point	% of Stack I.D.	x	Stack I.D. (Inches)	=	Distance to Sampling Point (Inches)
1	1.1		240.75		2.65
2	3.5		240.75		8.43
3	6.0		240.75		14.45
4	8.7		240.75		20.95
5	11.6		240.75		27.93
6	14.6		240.75		35.15
7	18.0		240.75		43.34
8	21.8		240.75		52.48
9	26.2		240.75		63.08
10	31.5		240.75		75.84
11	39.3		240.75		94.61
12	60.7		240.75		146.14
13	68.5		240.75		164.91
14	73.8		240.75		177.67
15	78.2		240.75		188.27
16	82.0		240.75		197.42
17	85.4		240.75		205.60
18	88.4		240.75		212.82
19	91.3		240.75		219.80
20	94.0		240.75		226.31
21	96.5		240.75		232.32
22	98.9		240.75		238.10

part of the Appendix. Using the field data taken during each sample run, along with corresponding laboratory data, calculations were made to determine various exhaust gas parameters and particulate emissions. A summary of these is found in Chapter 2, Table 2-1. Calculation sheets on each run are also a part of the Appendix. Fyrite readings taken during the study for calculating gas densities are shown on the field data sheets. Parameters used for all calculations are listed on each calculation sheet and are a part of the Appendix also.

APPENDIX

BC&E CH2M HILL

MONTGOMERY OFFICE
BLACK, CROW AND EIDSNESS, INC.
607 SOUTH McDONOUGH STREET
MONTGOMERY, ALABAMA 36104
205/834-2870 A DIVISION OF CH2M HILL

Plant U.S. STEEL - COKE PLANT

Date 1/22/79 Run # 1, 2, 3

Sampling Location

UNDERFIRE STACK - #2 BATTERY

PARTICULATE SOURCE	RUN #1 Final Wt (grams)	RUN #1 Initial Wt. (grams)	RUN #1 Diff. (grams)	RUN #2 Final Wt. (grams)	RUN #2 Initial Wt. (grams)	RUN #2 Diff. (grams)	RUN #3 Final Wt. (grams)	RUN #3 Initial Wt. (grams)	RUN #3 Diff. (grams)	ACETONE BLANKS Final Wt. (grams)	ACETONE BLANKS Initial Wt. (grams)
Probe & Cyclone Wash	100.29369 / 190 ml	(1) 100.2782	.0154	118.56059 / 225 ml	(TEN) 118.5364	.0244	117.97889 / 160 ml	(DT) 117.9600	.0188	100.72999 / 175 ml	(14) 100.7288
Filter	.5275	(114) .4472	.0803	.5984	(115) .4512	.1472	.5558	(116) .4520	.1038	100ml	
Impingers (Ether Extraction)											
Impingers (Water)											
	Gross Weight		.0957	Gross Weight		.1716	Gross Weight		.1226	Total Blank Wt.	
	Less Blank Wt.		.0011	Less Blank Wt.		.0014	Less Blank Wt.		.0010		
	Net Weight		.0946	Net Weight		.1702	Net Weight		.1216		

NOTE: The weight of the probe and cyclone wash blank for each sample is in direct proportion to the weight of the actual blank based on volume.

SILICA GEL WEIGHINGS	Final Wt. (grams)	Initial Wt. (grams)	Diff. (grams)	Final Wt. (grams)	Initial Wt. (grams)	Diff (grams)	Final Wt. (grams)	Initial Wt. (grams)

BC&E CH2M HILL

[illegible] TH [illegible] NOUGH STREET
MONTGOMERY, ALABAMA 36104
205/834-2870 *A DIVISION OF CH2M HILL*

[illegible] 11-[illegible]-79 RUN NUMBER 2
TIME START 3:57 PM TIME END 6:02 PM
MATERIAL PROCESSING RATE
SAMPLING LOCATION #2 Coke Underfire Stack
WEATHER
AMBIENT TEMP. 52° °F STACK PRESS. 29.87
BAROMETRIC PRESS. 30.0 "Hg WET BULB
DRY BULB °F MOISTURE
DEW POINT °F

TEST CONDUCTED BY: MORGAN / TODD

NOZZLE DIA. .622 in.
PITOT CORR. FACTOR .85
ORIFICE CORR. FACTOR 1.77

FILTER NUMBER
SILICA GEL NUMBER

READING	GAS METER	IMPINGER COND.
FINAL	476.907	285
INITIAL	414.724	200
NET	62.183	185

ORSAT READING

% CO_2			
% O_2			
% CO			
% N_2			

SKETCH:

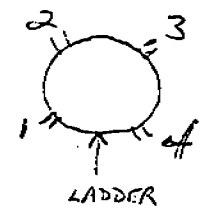

NOZZLE:
.620
.624
.622

Silica Gel Wt. Gain · 17.3g

FINAL LEAK CHECK
SAMPLE TRAIN AT ___ in.
FINAL
INITIAL
LEAK ___ /min.
PITOT
IMPACT ___ at ___ in.
STATIC ___ at ___ in.

DIA. 240.75 in.
AREA 316.13 ft²

STACK INFORMATION
DISTANCE FROM DISTURBANCE: DOWNSTREAM
UPSTREAM

REMARKS: T_m = 1.0, T_s = 360 %H_2O = 10, C = 0.87, ΔP = .02

PORT # / POINT #	DISTANCE FROM PORT (in.)	TIME	GAS METER VOLUME (ft^3)	STACK VELOCITY HEAD-Δp (in. H_2O)	$\sqrt{\Delta p}$	ORIFICE VELOCITY HEAD-Δp (in. H_2O)	GAS METER TEMP. T_m (°F) INLET	GAS METER TEMP. T_m (°F) OUTLET	STACK TEMP.-T_s (°F)	IMPINGER TEMP. (°F)	BOX TEMP. (°F)	VACUUM (in. Hg)
1/1		0	414.7	.015	.123	.138	50	53	360	50	245	—
2		2	416.0	.015	.123	1.38	50	53	360	50	255	—
3		4	417.3	.01	.100	0.92	51	53	365	50	255	—
4		6	418.4	.01	.100	0.92	51	53	345	50	250	—
5		8	419.6	.015	.123	1.38	51	53	345	50	245	—
6		10	420.9	.015	.123	1.38	52	53	350	52	245	—
7		12	422.2	.025	.158	2.30	53	53	360	52	250	—
8		14	423.9	.03	.173	2.70	53	53	360	54	260	—
9		16	425.8	.03	.173	2.70	53	53	360	54	260	—
10		18	427.6	.03	.173	2.70	54	53	360	54	255	—

POINT #	DISTANCE FROM PORT (in.)	TIME	GAS METER VOLUME (ft^3)	STACK VELOCITY HEAD- p (in. H_2O)	$\sqrt{\Delta p}$	ORIFICE VELOCITY HEAD- H (in. H_2O)	GAS METER TEMP. T_m (°F) INLET	GAS METER TEMP. T_m (°F) OUTLET	STACK TEMP.-T_s (°F)	IMPINGER TEMP. (°F)	BOX TEMP. (°F)	VACUUM (in.)
2/11		20	429.6	.015	123	1.38	55	54	360	55	250	—
3/1	4:32	0	430.9	.015	123	1.38	54	54	365	55	245	—
2		2	432.2	.02	.141	1.85	54	54	365	55	260	—
3		4	433.6	.015	.123	1.38	54	54	365	58	255	—
4		6	435.1	.018	.134	1.60	55	55	360	58	260	—
5		8	436.5	.02	.141	1.85	55	55	360	58	250	—
6		10	438.1	.015	.123	1.38	55	55	360	58	245	—
7		12	439.5	.015	.123	1.38	55	55	360	60	245	—
8		14	440.8	.013	.114	1.20	55	55	360	60	250	—
9		16		.015	.123	1.38	55	55	360	60	250	—
10		18	443.5	.015	.123	1.38	55	55	355	60	255	—
11		20	444.9	.015	.123	1.38	55	55	355	60	245	—
4/1	5:10	0	446.3	.015	.123	1.38	55	55	380	55	250	—
2		2	447.5	.015	.123	1.38	55	55	380	55	250	—
3		4	[illegible]	.02	.141	1.85	55	55	370	50	255	—
4		6	450.4	.015	.123	1.38	55	55	370	50	265	—
5		8	451.9	.015	.123	1.38	55	55	365	50	260	—
6		10	453.2	.015	.123	1.38	55	55	365	50	260	—
7		12	454.6	.015	.123	1.38	56	55	350	50	250	—
8		14	456.0	.02	.141	1.85	55	55	355	50	255	—
9		16	457.5	.02	.141	1.85	56	56	260	50	255	—

POINT #	DISTANCE FROM PORT (in.)	TIME	GAS METER VOLUME (ft^3)	STACK VELOCITY HEAD- p (in. H_2O)	$\sqrt{\Delta p}$	ORIFICE VELOCITY HEAD- H (in. H_2O)	GAS METER TEMP. T_m (°F) INLET	GAS METER TEMP. T_m (°F) OUTLET	STACK TEMP.-T_s (°F)	IMPINGER TEMP. (°F)	BOX TEMP. (°F)	VACUUM (in. Hg)
4/10		18	459.1	.015	.123	1.38	56	56	364	50	245	—
11		20	460.5	.015	.123	1.38	56	56	360	50	250	—
1/1	6:00	0	461.9	.015	.123	1.38	54	55	365	48	250	—
2		2	463.2	.01	.100	.92	54	55	365	48	250	—
3		4	464.4	.01	.100	.92	54	55	370	48	245	—
4		6	465.6	.015	.123	1.38	54	55	370	48	245	—
5		8	466.9	.02	.141	1.85	53	55	375	48	255	—
6		10	468.5	.015	.123	1.38	53	55	375	48	255	—
7		12	469.9	.015	.123	1.38	53	55	375	48	250	—
8		14	471.3	.015	.123	1.38	53	55	365	48	250	—
9		16	472.7	.02	.141	1.85	53	55	365	48	245	—
10		18	474.3	.02	.141	1.85	53	55	365	50	250	—
11		20	475.8	.01	.100	.92	53	55	365	50	250	—
Σ					5.628	67.10	4768		15960			
					.128	1.53	54		362.7			

BC&E CH2M HILL

MONTGOMERY OFFICE
BLACK, CROW AND EIDSNESS, INC.
807 SOUTH McDONOUGH STREET
MONTGOMERY, ALABAMA 36104
205/834-2870 A DIVISION OF CH2M HILL

Plant U.S. STEEL

Date 1/16/78 Run # 1

Sampling Location

COKE PLANT - UNDERFIRE STACK

Sampling Data

$\bar{T}_s$ = 823 °R; $\bar{T}_m$ = 514 °R

C_p = .85; $(\sqrt{\Delta p})_{avg}$ = .128

P_s = 29.89 in.Hg; M_s = 29.90 #/#-mole

A_s = 316.13 sq.ft.; V_m = 62.183 cu.ft.

H_2O (condensate) = 185 mls

H_2O (silica gel) = 17.3 gms

ΔH_{avg} = 1.53 in H_2O; P_b = 30.0 in Hg

Total particulate = .0946 grams

1. Calculate Stack gas velocity--

$$V_s = 85.48\ C_p\ (\sqrt{\Delta p})_{avg} \sqrt{\frac{T_s}{P_s M_s}}$$

$$V_s = 85.48\ (.85)(.128) \sqrt{\frac{823}{(29.89)(29.90)}}$$

$$V_s = 9.24 \text{ fps}$$

2. Calculate volume of water vapor in gas sample--

$$V_{wstd} = (0.0474) \begin{pmatrix} \text{mls } H_2O & \text{grams } H_2O \\ \text{condensate} & + \text{ silica gel} \end{pmatrix}$$

$$V_{wstd} = (0.0474)(185 + 17.3) = (0.0474)(202.300) = 9.589 \text{ cu.ft.}$$

3. Calculate gas sample volume at standard conditions--

$$V_{mstd} = (17.71)(V_m)\left(\frac{P_b + \frac{\Delta H}{13.6}}{T_m}\right)$$

$$V_{mstd} = (17.71)(62.183)\left(\frac{30.0 + \frac{1.53}{13.6}}{514}\right) = (1101.26)(0.059) = 64.517 \text{ cu.ft.}$$

4. Calculate percent moisture in gas stream--

$$B_{wo} = \frac{V_{wstd}}{V_{mstd} + V_{wstd}} = \frac{9.589}{64.517 + 9.589} = 0.129 = 12.9\%$$

5. Calculate stack gas volumetric flow rate, dry basis, std. conditions--

$$Q_{stpd} = 3600(1-B_{wo})V_s A_s \frac{530}{T_s} \frac{P_s}{29.92}$$

$$Q_{stpd} = 3600\ (1-.129)(9.24)(316.13)(530/823)(29.89/29.92) = 5,872,458 \text{ cu.ft./hr}$$

6. Calculate grain loading--

$$\text{grains/sdcf} = (15.43)(\text{grams})/V_{mstd} = (15.43)(.0946)/(64.517) = 0.0226$$

7. Calculate mass emission rate--

$$\text{lbs/hr} = (\text{grains/stdcf})(Q_{stpd})(1.43 \times 10^{-4})$$

$$\text{lbs/hr} = (.0226)(5,872,458)(1.43 \times 10^{-4}) = 19.04$$

BC&E CH2M HILL

MONTGOMERY OFFICE
BLACK, CROWND EIDSNESS, INC.
807 SOUTH McDONOUGH STREET
MONTGOMERY, ALABAMA 36104
205/834-2870 A DIVISION OF CH2M HILL

Client U.S. STEEL

Date 1/16/78 Run # 1

Sampling Location COKE PLANT

CALCULATION OF STACK GAS MOLECULAR WEIGHT (M_s)

Average Orsat Analysis (dry)

Moisture Content = 12.9 %

$\%CO_2$ = 5

$\%O_2$ = 10

%CO = —

$\%N_2$ = 85

Component	% Vol/100	X	Moisture Correction	X	Molecular Weight	=	Wt./Mole (wet base)
H_2O	.129	x	1.0	x	18.0	=	2.322
CO_2	.05	x	.871	x	44.0	=	1.916
O_2	.10	x	.871	x	32.0	=	2.787
CO	—	x		x	28.0	=	—
N_2	.85	x	.871	x	28.2	=	20.878

Average Molecular Wt., wet basis (M_s) = 27.90 lb/lb-mole

Density of gas referred to air = 28.95 =

Gas density correction factor $= \sqrt{\frac{1.00}{}} = \sqrt{} =$

MONTGOMERY OFFICE
BLAC CROW AND EIDSNESS, INC.
807 TH McDONOUGH STREET
MONTGOMERY, ALABAMA 36104
205/834-2870 *A DIVISION OF CH2M HILL*

BC&E CH2M HILL

Client U.S. STEEL

Date 1/16/78 Run# 1

Sampling Location

COKE PLANT

CALCULATION OF ISOKINETIC RATE

$$I = \frac{T_s \left(1.667 \frac{min}{sec}\right) \left[\left(0.00267 \frac{in.\ Hg\text{-}cu.ft.}{ml - {}^\circ R}\right) V_l + \frac{V_m}{T_m}\left(P_{bar} + \frac{\Delta H}{13.6}\right)\right]}{\theta V_s P_s A_n}$$

Where I = % of isokinetic sampling T_s = Avg. stack temperature = 823 °R

V_l = Total volume of liquid collected in impingers & silica gel = 202.3 ml

V_m = Gas sample thru dry gas meter @ meter conditions = 62.183 cu.ft.

T_m = Average dry gas meter temperature = 514 °R

P_{bar} = Barometric pressure @ sampling site = 30.0 in.Hg

ΔH = Average pressure drop across orifice = 1.53 in.H_2O

θ = Total sampling time = 88 min.

V_s = Stack gas velocity = 9.24 fps

P_s = Stack gas pressure = 29.89 in.Hg

A_n = Cross-sectional area of nozzle = 0.00211 sq.ft.

$$I = \frac{(823)(1.667)\left[(0.00267)(202.3) + \frac{62.183}{514}\left(30.0 + \frac{1.53}{13.6}\right)\right]}{(88)(9.24)(29.89)(.00211)}$$

$$I = \frac{(1371.941)\left[(0.540) + (0.121)(30.113)\right]}{(51.282)}$$

$$I = \frac{(1371.941)[0.540 + 3.643]}{(51.282)} = \frac{(1371.941)[4.183]}{(51.282)} = \frac{5738.979}{51.282}$$

I= 111.91 = 111.9 % of isokinetic sampling

BC&E CH2M HILL

[illegible] 07 S. [illegible] McL[illegible]UGH [illegible]EET
MONTGOMERY, ALABAMA 36104
205/834-2870 *A DIVISION OF CH2M HILL*

DATE [illegible] 17 [illegible] N NUMBER
TIME START 9:20 TIME END 12:34 PM
MATERIAL PROCESSING RATE
SAMPLING LOCATION UNDERFIRE STACK
WEATHER CLOUDY
AMBIENT TEMP. 50° °F STACK PRESS. 29.85 "H
BAROMETRIC PRESS. 29.96 "Hg WET BULB
DRY BULB °F MOISTURE
DEW POINT °F

EST CONDUCTED BY: TODD / MORGAN

OZZLE DIA. .622 in. FILTER NUMBER
ITOT CORR. FACTOR .85 SILICA GEL NUMBER
RIFICE CORR. FACTOR 1.77

READING	GAS METER	IMPINGER COND.
FINAL	564.950	448
INITIAL	478.720	200
NET	86.230	248

ORSAT READING

CO_2	5.0	4.5	
O_2	10.0	9.5	
CO			
N_2			

EMARKS: T_m = 60, T_s = 370, g_0H_2O = 13, C = 0.84, ΔP = .022

SKETCH:

NOZZLE:
.622
.620
.622
.623

Silica gel
~~[illegible]~~ 18.4g

FINAL LEAK CHECK
SAMPLE TRAIN AT 5 in.Hg
FINAL
INITIAL
LEAK .005 /m
PITOT
IMPACT at in.
STATIC at in.

DIA. 26.75 in.
AREA 316.13 ft²

STACK INFORMATION
DISTANCE FROM DISTURBANCE: DOWNSTREAM ft UPSTREAM ft

ORT # / POINT #	DISTANCE FROM PORT (in.)	TIME	GAS METER VOLUME (ft³)	STACK VELOCITY HEAD-Δp (in. H_2O)	$\sqrt{\Delta p}$	ORIFICE VELOCITY HEAD-Δp (in. H_2O)	GAS METER TEMP. T_m (°F) INLET	GAS METER TEMP. T_m (°F) OUTLET	STACK TEMP.-T_s (°F)	IMPINGER TEMP. (°F)	BOX TEMP. (°F)	VACUUM (in. Hg)
1/1	9:20	0	478.7	.018	.134	1.50	50	50	355	48	250	—
2		3	480.7	.018	.134	1.50	50	50	355	48	255	—
3		6	482.9	.018	.134	1.50	50	50	360	48	255	—
4		9	485.0	.015	.123	1.24	50	50	365	48	260	—
5		12	487.0	.015	.123	1.24	50	51	370	48	260	—
6		15	488.9	.015	.123	1.24	51	51	375	48	260	—
7		18	490.9	.02	.141	1.68	51	51	380	48	255	—
8		21	493.1	.02	.141	1.68	52	52	380	50	250	—
9		24	495.4	.02	.141	1.68	52	52	384	50	250	—
10		27	497.7	.02	.141	1.68	52	52	365	50	245	—

RUN # / POINT #	DISTANCE FROM PORT (in.)	TIME	GAS METER VOLUME (ft^3)	STACK VELOCITY HEAD- p (in. H_2O)	$\sqrt{\Delta p}$	ORIFICE VELOCITY HEAD- H (in. H_2O)	GAS METER TEMP. T_m (°F) INLET	GAS METER TEMP. T_m (°F) OUTLET	STACK TEMP.-T_s (°F)	IMPINGER TEMP. (°F)	BOX TEMP. (°F)	VACUUM (in. Hg)
1/11		30	499.9	.018	134	1.50	52	52	340	50	245	—
2/1	10:05	0	502.1	.015	123	1.24	51	52	360	50	240	—
2		3	504.1	.015	.123	1.24	51	52	360	50	240	—
3		6	506.0	.015	123	1.24	51	52	365	50	245	—
4		9	507.9	.015	.123	1.24	51	52	365	50	250	—
5		12	509.9	.015	.123	1.24	51	52	370	50	250	—
6		15	511.9	.015	.123	1.24	51	52	370	50	250	—
7		18	513.8	.015	.123	1.24	51	52	375	50	245	—
8		21	515.6	.018	.134	1.50	51	53	365	50	250	—
9		24	517.7	.02	.141	1.68	51	53	365	52	260	—
10		27		.018	.134	1.50	51	53	365	52	260	—
11		30	522.1	.01	.100	0.84	51	53	360	52	265	—
3/1	11:13	0	523.8	.015	.123	1.24	52	55	360	54	255	—
2		3	525.7	.015	.123	1.24	53	55	370	54	255	—
3		6	527.6	.015	123	1.24	54	55	370	54	250	—
4		9	529.5	.015	.123	1.24	55	55	370	54	240	—
5		12	531.5	.01	.100	0.84	56	56	365	54	240	—
6		15	533.2	.01	.100	0.84	58	56	365	54	240	—
7		18		.015	.123	1.24	59	57	390	55	245	—
8		21	536.7	.015	.123	1.24	60	57	395	55	235	—
9		24	538.7	.015	.123	1.24	62	58	400	55	235	—

PORT # / POINT #	DISTANCE FROM PORT (in.)	TIME	GAS METER VOLUME (ft^3)	STACK VELOCITY HEAD- p (in. H_2O)	$\sqrt{\Delta p}$	ORIFICE VELOCITY HEAD- H (in. H_2O)	GAS METER TEMP. T_m (°F) INLET	GAS METER TEMP. T_m (°F) OUTLET	STACK TEMP.-T_s (°F)	IMPINGER TEMP. (°F)	BOX TEMP. (°F)	VACUUM (in. Hg)
3/10		27	540.7	0.01	.100	0.84	63	58	410	55	240	—
11		30	542.5	0.01	.100	0.84	63	59	410	55	240	—
4/1	12.01	0	544.0	.015	.123	1.24	61	61	370	55	235	—
2		3	545.9	.02	.141	1.68	61	61	370	55	245	—
3		6	548.2	.015	.123	1.24	62	61	370	55	245	—
4		9	550.2	.018	.134	1.50	62	61	360	58	250	—
5		12	552.3	.015	.123	1.24	63	61	360	58	250	—
6		15	554.3	.01	.100	.84	63	61	360	58	240	—
7		18	556.0	.015	.123	1.24	64	62	365	58	240	—
8		21	558.0	.015	.123	1.24	64	62	365	58	240	—
9		24	560.0	.01	.100	.84	65	63	400	60	235	—
10		27	561.6	.01	.100	.84	65	63	400	60	235	—
11		30	563.3	.01	.100	.84	66	63	400	60	230	—
					5.256	55.42	48.89		16,395			
					.122	1.260		55.6	372.6			

PARTICULATE EMISSION DATA CALCULATION SHEET

BC&E CH2M HILL

MONTGOMERY OFFICE
BLACK, CROW AND EIDSNESS, INC.
807 SOUTH McDONOUGH STREET
MONTGOMERY, ALABAMA 36104
205/834-2870 A DIVISION OF CH2M HILL

Plant U.S. STEEL

Date 1/17/78 Run # 2

Sampling Location COKE PLANT - UNDERFIRE STACK

Sampling Data

$\bar{T}_s$ = 833 °R; $\bar{T}_m$ = 516 °R

C_p = .85; $(\sqrt{\Delta p})_{avg}$ = .122

P_s = 29.35 in.Hg; M_s = 27.96 g/g-mole

A_s = 316.13 sq.ft.; V_m = 86.23 cu.ft.

H_2O (condensate) = 248 mls

H_2O (silica gel) = 18.4 gms

ΔH_{avg} = 1.26 in H_2O; P_b = 29.96 in Hg

Total particulate = 0.1702 grams

1. Calculate Stack gas velocity--

$$V_s = 85.48\ C_p\ (\sqrt{\Delta p})_{avg}\sqrt{\frac{T_s}{P_s M_s}}$$

$$V_s = 85.48\ (.85)(.122)\sqrt{\frac{833}{(29.35)(27.96)}}$$

$$V_s = 8.86 \text{ fps}$$

2. Calculate volume of water vapor in gas sample--

$$V_{wstd} = (0.0474)\left(\begin{matrix}\text{mls } H_2O \\ \text{condensate}\end{matrix} + \begin{matrix}\text{grams } H_2O \\ \text{silica gel}\end{matrix}\right)$$

$$V_{wstd} = (0.0474)(248 + 18.4) = (0.0474)(266.4) = 12.627 \text{ cu.ft.}$$

3. Calculate gas sample volume at standard conditions--

$$V_{mstd} = (17.71)(V_m)\left(\frac{P_b + \frac{\Delta H}{13.6}}{T_m}\right)$$

$$V_{mstd} = (17.71)(86.23)\left(\frac{29.96 + \frac{1.26}{13.6}}{516}\right) = (1527.13)(0.058) = 88.943 \text{ cu.ft.}$$

4. Calculate percent moisture in gas stream--

$$B_{wo} = \frac{V_{wstd}}{V_{mstd} + V_{wstd}} = \frac{12.627}{88.943 + 12.627} = 0.124 = 12.4\%$$

5. Calculate stack gas volumetric flow rate, dry basis, std. conditions--

$$Q_{stpd} = 3600(1-B_{wo})V_s A_s \frac{530}{T_s} \frac{P_s}{29.92}$$

$$Q_{stpd} = 3600\ (1-.124)(8.86)(316.13)(530/833)(29.35/29.92) = 5,606,859 \text{ cu.ft./h}$$

6. Calculate grain loading--

$$\text{grains/sdcf} = (15.43)(\text{grams})/V_{mstd} = (15.43)(0.1702)/(88.943) = 0.0295$$

7. Calculate mass emission rate--

$$\text{lbs/hr} = (\text{grains/stdcf})(Q_{stpd})(1.43 \times 10^{-4})$$

$$\text{lbs/hr} = (.0295)(5,606,859)(1.43 \times 10^{-4}) = 23.7$$

BC&E CH2M HILL

MONTGOMERY OFFICE
BLACK, CROW AND EIDSNESS, INC.
807 SOUTH McDONOUGH STREET
MONTGOMERY, ALABAMA 36104
205/834-2870 A DIVISION OF CH2M HILL

Client U.S. STEEL

Date 1/17/78 Run # 2

Sampling Location

COKE PLANT - UNDERFIRE STACK

CALCULATION OF STACK GAS MOLECULAR WEIGHT (M_s)

Average Orsat Analysis (dry)

Moisture Content = 12.4 %

$\%CO_2$ = 5

$\%O_2$ = 10

$\%CO$ = —

$\%N_2$ = 85

Component	% Vol/100	X	Moisture Correction	X	Molecular Weight	=	Wt./Mole (wet base)
H_2O	.124	x	1.0	x	18.0	=	2.232
CO_2	.05	x	.876	x	44.0	=	1.927
O_2	.10	x	.876	x	32.0	=	2.803
CO	—	x		x	28.0	=	—
N_2	.85	x	.876	x	28.2	=	20.998

Average Molecular Wt., wet basis (M_s) = 27.96 lb/lb-mole

Density of gas referred to air = $\frac{28.95}{}$ =

Gas density correction factor = $\sqrt{\frac{1.00}{}}$ = $\sqrt{}$ =

BC&E
CH2M HILL

MONTGOMERY OFFICE
BLAC[illegible]ROW AND EIDSNESS, INC.
807 [illegible]TH McDONOUGH STREET
MONTGOMERY, ALABAMA 36104
205/834-2870 *A DIVISION OF CH2M HILL*

Client U.S. STEEL

Date 1/17/78 Run# 2

Sampling Location

COKE PLANT

CALCULATION OF ISOKINETIC RATE

$$I = \frac{T_s \left(1.667 \frac{min}{sec}\right) \left[\left(0.00267 \frac{in.\ Hg\text{-}cu.ft.}{ml - {}^\circ R}\right) V_l + \frac{V_m}{T_m}\left(P_{bar} + \frac{\Delta H}{13.6}\right)\right]}{\theta V_s P_s A_n}$$

Where I = % of isokinetic sampling T_s = Avg. stack temperature = 833 °R

V_l = Total volume of liquid collected in impingers & silica gel = 266.4 ml

V_m = Gas sample thru dry gas meter @ meter conditions = 86.230 cu.ft.

T_m = Average dry gas meter temperature = 516 °R

P_{bar} = Barometric pressure @ sampling site = 29.96 in.Hg

ΔH = Average pressure drop across orifice = 1.26 in.H_2O

θ = Total sampling time = 132 min.

V_s = Stack gas velocity = 8.86 fps

P_s = Stack gas pressure = 29.85 in.Hg

A_n = Cross-sectional area of nozzle = 0.00211 sq.ft.

$$I = \frac{(.833)(1.667)\left[(0.00267)(266.4) + \frac{86.230}{516}\left(29.96 + \frac{1.26}{13.6}\right)\right]}{(132)(8.86)(29.85)(.00211)}$$

$$I = \frac{(1388.61)\left[(0.711) + (0.167)(30.053)\right]}{(72.66)}$$

$$I = \frac{(1388.61)[0.711 + 5.022]}{(72.66)} = \frac{(1388.61)[5.733]}{(72.66)} = \frac{7961.543}{73.660}$$

I = 108.08 = 108.1 % of isokinetic sampling

BC&E CH2M HILL

BLAC[illegible]OW[illegible]IDS[illegible], INC
807 SOUTH McDONOUGH STREET
MONTGOMERY, ALABAMA 36104
205/834-2870 *A DIVISION OF CH2M HILL*

DATE 1/17/79 RUN NUMBER 3
TIME START 2:24 PM TIME END 4:14 PM
MATERIAL PROCESSING RATE
SAMPLING LOCATION UNDERFIRE STACK
WEATHER CLOUDY
AMBIENT TEMP. 65 °F STACK PRESS. (-1.5" H_2O) 29.73 "H
BAROMETRIC PRESS. 29.84 "Hg WET BULB °
DRY BULB °F MOISTURE
DEW POINT °F

TEST CONDUCTED BY: MORGAN | TODD

NOZZLE DIA. .622 in. FILTER NUMBER
PITOT CORR. FACTOR .84 SILICA GEL NUMBER
ORIFICE CORR. FACTOR 1.77

READING	GAS METER	IMPINGER COND.
FINAL	626.280	380
INITIAL	565.142	200
NET	61.138	180

ORSAT READING
% CO_2
% O_2
% CO
% N_2

REMARKS: T_m=70, T_s=370, % H_2O=13, C=0.85, ΔP=0.022

SKETCH:

Silica gel = 11.9g

FINAL LEAK CHECK
SAMPLE TRAIN AT in.Hg
FINAL
INITIAL
LEAK /min.
PITOT
IMPACT at in.
STATIC at in.

DIA. 1240.75 in.
AREA 316.13 ft^2

STACK INFORMATION
DISTANCE FROM DISTURBANCE: DOWNSTREAM ft
UPSTREAM ft

PORT # / POINT #	DISTANCE FROM PORT (in.)	TIME	GAS METER VOLUME (ft^3)	STACK VELOCITY HEAD-Δp (in. H_2O)	$\sqrt{\Delta p}$	ORIFICE VELOCITY HEAD-Δp (in. H_2O)	GAS METER TEMP. T_m (°F) INLET	GAS METER TEMP. T_m (°F) OUTLET	STACK TEMP.-T_s (°F)	IMPINGER TEMP. (°F)	BOX TEMP. (°F)	VACUUM (in. Hg)
3/1		0	565.1	.015	.123	1.24	63	65	375	52	240	—
2		2	566.4	.015	.123	1.24	63	65	385	52	240	—
3		4	567.8	.015	.123	1.24	63	65	400	52	245	—
4		6	569.1	.015	.123	1.24	63	65	400	52	245	—
5		8	570.4	.015	.123	1.24	64	65	380	52	250	—
6		10	571.8	.018	.134	1.50	65	65	380	52	250	—
7		12	573.2	.018	.134	1.50	65	65	380	55	240	—
8		14	574.7	.018	.134	1.50	65	66	370	55	240	—
9		16	576.1	.02	.141	1.68	66	66	370	55	235	—
10		18	577.7	.02	.141	1.68	68	67	370	55	240	—

POINT # / POINT #	DISTANCE FROM PORT (in.)	TIME	GAS METER VOLUME (ft^3)	STACK VELOCITY HEAD- p (in. H_2O)	$\sqrt{\Delta p}$	ORIFICE VELOCITY HEAD- H (in. H_2O)	GAS METER TEMP. T_m (°F) INLET	GAS METER TEMP. T_m (°F) OUTLET	STACK TEMP.-T_s (°F)	IMPINGER TEMP. (°F)	BOX TEMP. (°F)	VACUUM (in. Hg)
3/11		20	579.2	.015	.123	1.24	68	67	365	55	240	—
2/1	2.44	0	580.6	.02	.141	1.68	68	67	385	55	240	—
2		2	582.1	.015	.123	1.24	68	67	395	55	245	—
3		4	583.5	.015	.123	1.24	68	68	400	58	250	—
4		6	584.8	.015	.123	1.24	68	68	400	58	255	—
5		8	586.1	.015	.123	1.24	68	68	400	60	260	—
6		10	587.5	.015	.123	1.24	69	68	400	60	250	—
7		12	588.8	.02	.141	1.68	70	68	400	60	250	—
8		14	590.4	.015	.123	1.24	70	68	400	60	245	—
9		16	591.7	.015	.123	1.24	70	69	390	62	245	—
10		18	593.1	.015	.123	1.24	70	69	375	62	240	—
11		20	594.4	.015	.123	1.24	70	69	370	62	240	—
1/1	3:24	0	595.8	.018	.134	1.50	70	70	350	62	245	—
2		2	597.2	.015	.123	1.24	70	70	350	62	250	—
3	VISIBLE PLUME	4	598.5	.015	.123	1.24	70	70	370	62	260	—
4		6	599.8	.018	.134	1.50	70	70	380	62	250	—
5		8	601.3	.018	.134	1.50	70	70	395	60	250	—
6		10	602.7	.018	.134	1.50	70	70	395	60	245	—
7		12	604.2	.02	.141	1.68	70	70	400	60	245	—
8		14	605.9	.02	.141	1.68	70	70	400	60	245	—
9		16	607.3	.015	.123	1.24	70	70	390	60	250	—

PORT # / POINT #	DISTANCE FROM PORT (in.)	TIME	GAS METER VOLUME (ft^3)	STACK VELOCITY HEAD- p (in. H_2O)	$\sqrt{\Delta p}$	ORIFICE VELOCITY HEAD- H (in. H_2O)	GAS METER TEMP. T_m (°F) INLET	GAS METER TEMP. T_m (°F) OUTLET	STACK TEMP.-T_s (°F)	IMPINGER TEMP. (°F)	BOX TEMP. (°F)	VACUUM (in. Hg)
1/10		18	608.7	.015	.123	1.24	71	70	390	60	250	—
11		20	610.1	.01	.100	0.84	72	70	390	60	250	—
4/1	4:52	0	611.2	.018	.134	1.50	70	70	380	60	255	—
2		2	612.6	.018	.123	1.50	70	70	380	60	255	—
3		4	614.1	.018	.134	1.50	70	70	380	60	[illegible]	—
4		6	615.5	.018	.134	1.50	70	70	385	62	240	—
5		8	617.0	.015	.123	1.24	70	70	385	62	240	—
6		10	618.4	.015	.123	1.24	70	70	385	62	240	—
7		12	619.7	.015	.123	1.24	70	70	395	64	250	—
8		14	621.0	.015	.123	1.24	70	70	400	64	250	—
9		16	622.4	.015	.123	1.24	70	70	400	64	250	—
10		18	623.8	.015	.123	1.24	70	70	400	64	245	—
11		20	625.0	.015	.123	1.24	70	70	390	65	245	-
					[illegible]	—	6024		11985			
					[illegible]	59.40		68.5	386			
					5.607	1.35						
					0.127							

BC&E
CH2M HILL

MONTGOMERY OFFICE
BLACK, CROW AND EIDSNESS, INC.
807 SOUTH McDONOUGH STREET
MONTGOMERY, ALABAMA 36104
205/834-2870 A DIVISION OF CH2M HILL

Plant U.S. STEEL

Date 1/17/78 Run # 3

Sampling Location

COKE PLANT - UNDERFIRE STACK

Sampling Data

$\bar{T}_s$ = 846 °R; $\bar{T}_m$ = 529 °R

C_p = .85; $(\sqrt{\Delta p})_{avg}$ = .127

P_s = 29.73 in. Hg; M_s = 27.90 g/g-mole

A_n = 316.13 sq. ft.; V_m = 61.138 cu. ft.

H_2O (condensate) = 180 mls

H_2O (silica gel) = 11.9 grams

ΔH_{avg} = 1.35 in H_2O; P_b = 29.84 in Hg

Total particulate = 0.1216 grams

1. Calculate Stack gas velocity--

$$V_s = 85.48\ C_p\ (\sqrt{\Delta p})_{avg}\sqrt{\frac{T_s}{P_s M_s}}$$

$$V_s = 85.48\ (.85)(.127)\sqrt{\frac{846}{(29.73)(27.90)}}$$

V_s = 9.32 fps

2. Calculate volume of water vapor in gas sample--

$$V_{wstd} = (0.0474)\begin{pmatrix}\text{mls } H_2O \\ \text{condensate}\end{pmatrix} + \begin{pmatrix}\text{grams } H_2O \\ \text{silica gel}\end{pmatrix}$$

$$V_{wstd} = (0.0474)(180 + 11.9) = (0.0474)(191.9) = 9.096 \text{ cu.ft.}$$

3. Calculate gas sample volume at standard conditions--

$$V_{mstd} = (17.71)(V_m)\left(\frac{P_b + \frac{\Delta H}{13.6}}{T_m}\right)$$

$$V_{mstd} = (17.71)(61.138)\left(\frac{29.84 + \frac{1.35}{13.6}}{529}\right) = (1082.752)(0.057) = 61.280 \text{ cu.ft.}$$

4. Calculate percent moisture in gas stream--

$$B_{wo} = \frac{V_{wstd}}{V_{mstd} + V_{wstd}} = \frac{9.096}{61.280 + 9.096} = 0.129 = 12.9\%$$

5. Calculate stack gas volumetric flow rate, dry basis, std. conditions--

$$Q_{stpd} = 3600(1-B_{wo})V_s A_s \frac{530}{T_s} \frac{P_s}{29.92}$$

$$Q_{stpd} = 3600\ (1-.129)(9.32)(316.13)(530/846)(29.73/29.92) = 5,750,970 \text{ cu.ft./h}$$

6. Calculate grain loading--

$$\text{grains/sdcf} = (15.43)(\text{grams})/V_{mstd} = (15.43)(0.1216)/(61.280) = 0.0306$$

7. Calculate mass emission rate--

$$\text{lbs/hr} = (\text{grains/stdcf})(Q_{stpd})(1.43 \times 10^{-4})$$

$$\text{lbs/hr} = (0.0306)(5,750,970)(1.43 \times 10^{-4}) = 25.17$$

MONTGOMERY OFFICE
BLACK BOW AND EIDSNESS, INC.
807 SOUTH McDONOUGH STREET
MONTGOMERY, ALABAMA 36104
205/834-2870 A DIVISION OF CH2M HILL

BC&E CH2M HILL

Client U.S. STEEL

Date 1/17/78 Run# 3

Sampling Location COKE PLANT

CALCULATION OF ISOKINETIC RATE

$$I = \frac{T_s \left(1.667 \frac{min}{sec}\right) \left[\left(0.00267 \frac{in.\ Hg\text{-}cu.ft.}{ml - {}^\circ R}\right) V_l + \frac{V_m}{T_m}\left(P_{bar} + \frac{\Delta H}{13.6}\right)\right]}{\theta V_s P_s A_n}$$

Where I = % of isokinetic sampling T_s = Avg. stack temperature = 846 °R

V_l = Total volume of liquid collected in impingers & silica gel = 1719 ml

V_m = Gas sample thru dry gas meter @ meter conditions = 61.138 cu.ft.

T_m = Average dry gas meter temperature = 529 °R

P_{bar} = Barometric pressure @ sampling site = 29.84 in.Hg

ΔH = Average pressure drop across orifice = 1.35 in.H_2O

θ = Total sampling time = 88 min.

V_s = Stack gas velocity = 9.32 fps

P_s = Stack gas pressure = 29.73 in.Hg

A_n = Cross-sectional area of nozzle = .00211 sq.ft.

$$I = \frac{(846)(1.667)\left[(0.00267)(1719) + \frac{61.138}{529}\left(29.84 + \frac{1.35}{13.6}\right)\right]}{(88)(9.32)(29.73)(.00211)}$$

$$I = \frac{(1410.282)\left[(0.512) + (0.116)(29.939)\right]}{(51.449)}$$

$$I = \frac{(1410.282)[0.512 + 3.460]}{(51.449)} = \frac{(1410.282)[3.973]}{(51.449)} = \frac{5602.397}{51.449}$$

I = 108.89 = 108.9 % of isokinetic sampling

MONTGOMERY OFFICE
BLACK, CROWLAND EIDSNESS, INC.
807 SOUTH McDONOUGH STREET
MONTGOMERY, ALABAMA 36104
205/834-2870 A DIVISION OF CH2M HILL

BC&E CH2M HILL

Client U.S. STEEL

Date 1/17/78 Run # 3

Sampling Location COKE PLANT

CALCULATION OF STACK GAS MOLECULAR WEIGHT (M_s)

Moisture Content = 12.9 %

Average Orsat Analysis (dry)

$\%CO_2$ = 5

$\% O_2$ = 10

$\%CO$ = —

$\% N_2$ = 85

Component	% Vol/100	X	Moisture Correction	X	Molecular Weight	=	Wt./Mole (wet base)
H_2O	.129	x	1.0	x	18.0	=	2.322
CO_2	.05	x	.871	x	44.0	=	1.916
O_2	.10	x	.871	x	32.0	=	2.787
CO	—	x		x	28.0	=	—
N_2	.85	x	.871	x	28.2	=	20.878

Average Molecular Wt., wet basis (M_s) = 27.90 lb/lb-mole

Density of gas referred to air = $\frac{28.95}{}$ =

Gas density correction factor = $\sqrt{\frac{1.00}{}}$ = $\sqrt{}$ =

SOTDAT/STEEL LIBRARY SYSTEM

Report Title: See Title pg.

Plant and Location: USSC, Fairfield, AL

SCC: 30300306

Testing Date(s): 1/16-17/79

By Whom: CH2M Hill

Stack Test Review Attached: No

Reviewed By:

Problems Seen by Reviewer:

Confidentiality Status: Clear

If status is confidential, list confidential pages or sections:

Source of Determination of the Confidentiality Status:
2/1/83 Memo from J. Baskerville to M. Siegler

Report Encoded By:

Date Encoded:

Form Numbers:

Comments: