Note: This is a reference cited in *AP 42, Compilation of Air Pollutant Emission Factors, Volume I Stationary Point and Area Sources.* AP42 is located on the EPA web site at www.epa.gov/ttn/chief/ap42/

The file name refers to the reference number, the AP42 chapter and section. The file name "ref02_c01s02.pdf" would mean the reference is from AP42 chapter 1 section 2. The reference may be from a previous version of the section and no longer cited. The primary source should always be checked.

PARTICULATE MATTER COMPLIANCE TESTS

CONDUCTED AT

U S Steel - Geneva Works

Coke Pushing Baghouse System 3&4

December 28-29, 1982

by:

TETCO

Timp Environmental Testing Company

350 East 400 South

American Fork, Utah 84003

TECHNICAL TEAM:

Director	Melvin Kitchen
Consultant	Jack Ruckman
Consultant	Arthur Holloman
Technician	Boyd Davis
Technician	Cory Colledge
Technician	Travis Fraughton
VEO	Susan Fergusan
VEO	Newell Kitchen
VEO	Keith B. Smith
VEO	Dennis Phister
VEO	Norman B. Johnson
VEO	Robert Olsen

Prepared for:
Mikropul Corporation
10 Chatham Road
Summit, New Jersey
07901

date of report Jan. 10, 1983

CERTIFICATION OF REPORT INTEGRITY

Timp Environmental Testing Company (TETCO) certifies that this report represents the truth as well as can be derived by the methods employed. Every effort was made to obtain accurate and representative data and to comply with procedures set forth in the Federal Register.

Melvin R. Kitchen, President

Reviewer: Melvin R. Kitchen

Title: Pres.

Date: Jan 10, 1983

Reviewer: Jack Rickman

Title: Consultant

Date: Jan 10, 1983

TABLE OF CONTENTS

Introduction	3
Test Purpose	3
Test Location, Type of Process	3
Test Dates	3
Pollutants Tested	4
Observers	4
Methods Applied	5
Quality Assurance	5
Summary of Rusults	5
Emissions Results	5
Process Data	6
Description of Samples	6
Visible Emissions Summary	6
Discussion of Irregularities	7
Percent Isokinetic Sampling	7
Statement of Data Quality	8
Source Operation	8
Process and Control Devices	8
Process Data	8
Representiveness of Process	9
Control Equipment	9
Special Operations	9
Sampling and Analysis Procedure	9
Sampling Port Location and Cross Section	9
Sampling Port Description	10
Sampling Train Description	10
Sampling Procedures	11
Analytical Procedures	11
Quality Assurance	11
Appendix	12
Complete Results and Sample calculations	12
Raw Field Data	13
Laboratory Data	14
Raw Production and Control Equipment Data	15
Chronological Record of Test Events	16
Calibration Procedures and Results	17
Project Participants	18
Related Correspondence	19
Chain of Custody	20

LIST OF TABLES

Table I	Measured Emissions	6
Table II	Percent Isokinetic	8
Table III	Traverse Points	10
Table IV	Data Summary 12/28/82	12-1
Table V	Data Summary 12/29/82	12-2

LIST OF FIGURES

Figure 1	Coke Plant Shed Baghouse	3-1

INTRODUCTION

Test Purpose:

The purpose of the tests is to determine the particulate emissions from the stacks in terms of grains per dry standard cubic feet.

Test Location, Type of Process:

The test was conducted on the North shed and associated baghouse of the Geneva Works coke pushing operation. At the time of the test, battery Nos. 3 and 4 were operating on a pushing schedule of 20-21 ovens per 8 hr. turn. The emissions from the hot coke as it is pushed from the oven is captured in the shed and drawn through a duct system to the baghouse through which it passes prior to exit into the atmosphere. Each stack serves an individual module of the baghouse and works independently of the others.

A schematic representation of the control system is given in Figure 1.

Test Dates:

Baghouse stacks No. 11 and 16 were tested Dec. 28 and stacks No. 12 and 17 were tested Dec. 29, 1982. Observations were made for shed emissions simultaneous with the stack tests on both days. Stack emissions were also spot checked

Figure 1
Geneva Works
Coke Plant Shed Baghouse
control System

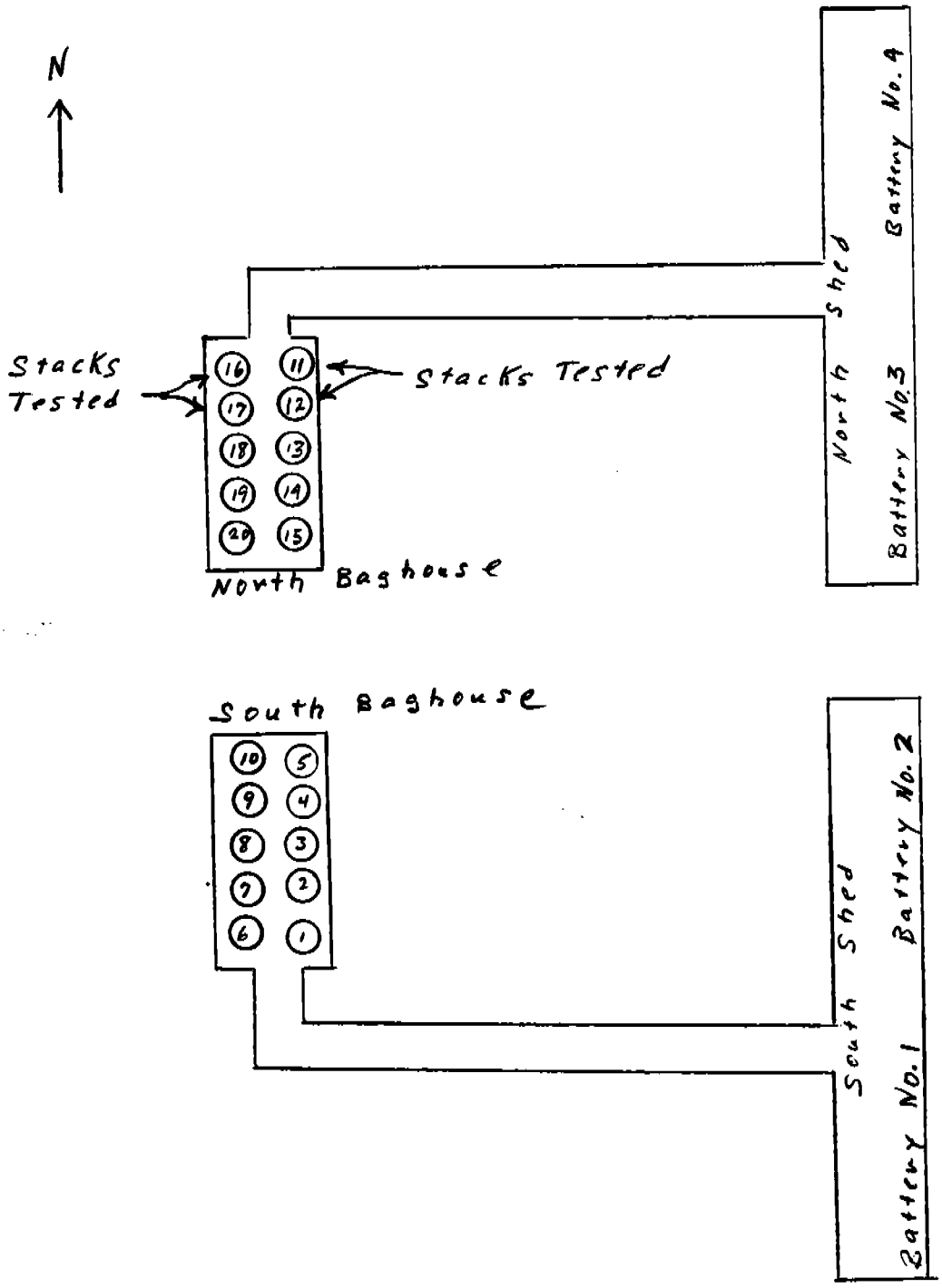

during pushing periods.

Pollutants Tested:

The tests were gravimetric determinations of particulates in accordance with EPA Method 5. Visual emissions were observed for the entire shed system and baghouse stacks in accordance with EPA Method 9.

Observers:

Test Facility

Boyd Erickson	Supt. Env. Control Eng.
James R. Starley	Sr. Env. Control Eng.
Ronald Harris	Env. Control Engineer
H.A. Brown	Supt. Coke Plant
Mark Peotter	Mikropul Engineer
Max Buckner	Engineer

State Agency

Jim Stephens	State Air Quality
Jeff Dean	State Air Quality
Michael Behling	State Air Quality
Dave McNeill	Utah Div. of Health

Federal Agency

Paul Wolf	EPA Rep. GCA Corp.
Matthew Sutton	EPA Rep. GCA Corp.

Methods Applied:

EPA Methods 1-5 were used for each of the tests.

EPA Method 9 was used for visual emission observations.

Quality Assurance:

Testing procedures and sample recovery techniques were according to those outlined in the Federal Register and the Quality Assurance Handbook for Air Pollution Measurement Systems.

SUMMARY OF RESULTS

Emissions Results:

The allowable emissions for these stacks is 0.010 grain per dry standard cubic foot.

Visible emissions shall not exceed 20% opacity at any time.

Table I presents the results of gravimetric measurements. A simple average is given as well as a weighted average relative to the volume emitted from the respective stacks. The weighted average was obtained using the following equation:

$$\frac{Qsx}{\text{sum } (Qsn)} * \text{Particulate Conc. Test } x$$

= contribution to weighted average for Test x

TABLE I

Measured Emissions (gr/dscf)

Stack #	Date	Particulates	Volume Weighted Average
11	12/28	0.0053	0.0013726
16	12/28	0.0034	0.0009523
12	12/29	0.0025	0.0005337
17	12/29	0.0024	0.0005939
Simple Average		0.0034	Wtd. Av. 0.0034525

Where the sum of (Qsn) = 124166.44

Process Data:

The oven number that was pushed is recorded on the particulate data sheet for each sampling period. Tester and agency personnel were furnished with a copy of the push schedule each day and these are included in the Appendix.

Description of Collected Samples:

There was no more than a small fleck or two of particulate observable on any of the filters.

Visible Emissions Summary:

There were no emissions observed from any of the stacks on the baghouse at any time. There were no emissions exceeding 15% observed on either side of the shed at any time.

Discussion of Irregularities:

Two problems were encountered during the test which affected the clock times recorded on the field sheets. Ambient temperatures were so low that the electronic watches from which clock time was being recorded could not be read at times. The time recorded by the operator on these occasions was that obtained verbally from others on the test crew. The high level of noise on the stack made communication difficult. The radio communication from the pushing operation was clear so there was no difficulty in actually starting the test for each point at the time the push was made.

Gas samples were taken on the first day of testing and analyses showed the gas stream to be ambient air. Ambient air analysis was used on the second day as agreed upon in the pre-test meeting.

Percent Isokinetic Sampling:

Each of the tests were isokinetic within the + or - 10% criterion specified in the Federal Register.

Isokinetic values are presented in Table II.

TABLE II

Baghouse #	Percent Isokinetic
11	99.8
16	99.4
12	98.6
17	100.4

Statement of Data Quality:

All testing procedures and sample recovery techniques were according to those outlined in the Federal Register and the Quality Assurance Handbook for Air Pollution Measurement Systems.

SOURCE OPERATION

Process and Control Devices:

All process and control devices were operated according to standard procedures. Data was taken according to the protocol agreement.

Process Data:

The process was operated according to standard procedures. All pertinent process data were recorded by State and Federal agency personnel.

Representativeness of Process:

Every effort was made to assure the representativeness of the process during testing.

Control Equipment and Operating Parameters:

All control equipment and operating parameters were within the guidelines agreed upon in the protocol.

Special Operations, If Any:

No special operations were included during testing.

SAMPLING AND ANALYSIS PROCEDURE

Sampling Port Location and Cross Section:

The inside diameter of the stack is 48 inches. Port location is depicted in Figure 1. The 4 inch ports are located 96 inches downstream from the last disturbance and 24 inches upstream from the top rim of the stack. Port cross sections are shown on the particulate field data sheets.

Table III shows the distance of each sampling point from the inside wall.

TABLE III

Sampling Points (inches)

Sample Point	Distance From Inside Wall
1,22	1.00
2,21	1.68
3,20	2.88
4,19	4.18
5,18	5.57
6,17	7.01
7,16	8.64
8,15	10.46
9,14	12.58
10,13	15.12
11,12	18.86

Sampling Port Description:

The sampling ports are 4 inch diameter pipe nipples welded to the stacks such that they are flush with the inside walls of the stacks. The distance from the inside wall to the end of the sampling ports is 5 1/4 inches. There are two ports on each stack located 90 degrees from each other.

Sampling Train Description:

The stack analyzers used to conduct the tests were Anderson "Emission Parameter Analyzers". The probe liners were of stainless steel.

Sampling Procedures:

All test procedures employed were as specified in 40 CFR 60.46. Sampling started at each point as the coke started to be pushed from the oven and continued for 2 1/2 minutes. The probe was then removed from the stack and the nozzle covered until the next oven was ready to be pushed. Each test included the pushing of 44 ovens.

Analytical Procedures:

Analytical procedures were as specified in 40 CFR 60.46.

Quality Assurance:

All equipment set-up, sampling procedures, sample recovery, and equipment calibrations were carried out according to the procedures specified in 40 CFR 60.46 and the Quality Assurance Handbook for Air Pollution Measurement Systems.

APPENDIX

Complete Results and Sample Calculations:

DATA SUMMARY 12/28/82

SYMBOL	DESCRIPTION	DIMENSIONS	TEST NUMBER 1	2	3
RUN #			1	2	3
DATE			12/28/82	12/28/82	
BEGIN	TIME TEST BEGAN		0841	0840	
END	TIME TEST ENDED		1644	1644	
Pb	Barometric Pressure	In. Hg Abs	25.79	25.79	0.00
dH	Orifice Pressure Drop	In. H2O	0.9400	0.9500	0.0000
Vm	Volume Gas Sampled	cf	53.366	61.844	0.000
Tm	Av. Meter Temperature	Deg. F	36.000	34.700	0.000
Ts	Av. Stack Temperature	Deg. F	74.500	79.100	0.000
dPsqrt	Sq. Root Velocity Head	Root In. H2O	0.8351	0.9066	0.0000
Wtwc	Weight Water Collected	Grams	16.800	18.600	0.000
* Wcal	Weight Water Calculated At Saturation	Grams	36.65	48.87	0.00
Tt	Duration of Test	Minutes	110.000	110.000	0.000
Dn	Nozzle Diameter	Inches	0.1790	0.1860	0.0000
N2	Volume % Nitrogen	Percent	79.00	79.00	0.00
O2	Volume % Oxygen	Percent	21.00	21.00	0.00
CO2	Volume % Carbon Dioxide	Percent	0.00	0.00	0.00
CO	Volume % Carbon Monoxide	Percent	0.00	0.00	0.00
As	Stack Cross Section Area	Square ft	12.566	12.566	0.000
Mf	Front Half Particulate	Milligrams	16.75	12.50	0.00
Mt	Total Particulate	Milligrams	17.60	15.65	0.00
Ps	Stack Pressure	In. Hg Abs.	25.74	25.74	0.00
Qs	Stack Gas Volume (Standard)	dcfm	32156.7	34777.9	0.0
Qa	Stack Gas Volume (Actual)	cfm	38438.5	41907.7	0.0
Vmstd	Volume Gas Sampled (Standard)	dscf	49.107	57.057	0.000
Vw	Volume Water Vapor	scf	0.792	0.877	0.000
Bwo	Fraction H2O in Stack Gas		0.0159	0.0151	0.0000
Xd	Fraction Dry Gas		0.9841	0.9849	0.0000
Md	Molecular Wt Dry Gas	lb/lb mole	28.840	28.840	0.000
Ms	Molecular Wt Stack Gas	lb/lb mole	28.668	28.676	0.000
Vs	Velocity of Exhaust Gas	fpm	3058.84	3334.91	0.00
I	Percent Isokinetic	Percent	99.848	99.351	0.000
Cf	Particulate Concentration (Front)	Grain/dscf	0.0053	0.0034	0.0000
Ct	Particulate Concentration (Total)	Grain/dscf	0.0055	0.0042	0.0000
Cfa	Actual Particulate Conc. (Front)	Grain/acf	0.0044	0.0028	0.0000
Cta	Actual Particulate Conc. (Total)	Grain/acf	0.0046	0.0035	0.0000
ERf	Emission Rate (Front Half)	lbs/hr	1.45	1.01	0.00
ERt	Emission Rate (Total)	lbs/hr	1.52	1.26	0.00

* IF THE WATER CALCULATED AT SATURATION IS LESS THAN THE COLLECTED WATER, THE SATURATION MOISTURE IS USED IN ALL SUCCEEDING CALCULATIONS.

DATA SUMMARY 12/29/82

SYMBOL	DESCRIPTION	DIMENSIONS	TEST NUMBER		
RUN #			1	2	3
DATE			12/29/82	12/29/82	
BESIN	TIME TEST BEGAN		0836	0836	
END	TIME TEST ENDED		1726	1726	
Pb	Barometric Pressure	In. Hg Abs	25.66	25.66	0.00
dH	Orifice Pressure Drop	In. H2O	0.5580	0.7340	0.0000
Vm	Volume Gas Sampled	cf	43.998	55.702	0.000
Tm	Av. Meter Temperature	Deg. F	39.300	36.100	0.000
Ts	Av. Stack Temperature	Deg. F	71.200	78.000	0.000
dPsqrt	Sq. Root Velocity Head	Root In. H2O	0.6830	0.7991	0.0000
Wtwc	Weight Water Collected	Grams	6.600	12.300	0.000
* Wcal	Weight Water Calculated At Saturation	Grams	26.06	42.34	0.00
Tt	Duration of Test	Minutes	110.000	110.000	0.000
Dn	Nozzle Diameter	Inches	0.1790	0.1860	0.0000
N2	Volume % Nitrogen	Percent	79.00	79.00	0.00
O2	Volume % Oxygen	Percent	21.00	21.00	0.00
CO2	Volume % Carbon Dioxide	Percent	0.00	0.00	0.00
CO	Volume % Carbon Monoxide	Percent	0.00	0.00	0.00
As	Stack Cross Section Area	Square ft	12.566	12.566	0.000
Mf	Front Half Particulate	Milligrams	6.45	7.95	0.00
Mt	Total Particulate	Milligrams	37.35	9.60	0.00
Ps	Stack Pressure	In. Hg Abs.	25.64	25.64	0.00
Qs	Stack Gas Volume (Standard)	dcfm	26506.4	30725.4	0.0
Qa	Stack Gas Volume (Actual)	cfm	31354.4	36943.9	0.0
Vmstd	Volume Gas Sampled (Standard)	dscf	39.973	50.958	0.000
Vw	Volume Water Vapor	scf	0.311	0.580	0.000
Bwo	Fraction H2O in Stack Gas		0.0077	0.0113	0.0000
Xd	Fraction Dry Gas		0.9923	0.9887	0.0000
Md	Molecular Wt Dry Gas	lb/lb mole	28.840	28.840	0.000
Ms	Molecular Wt Stack Gas	lb/lb mole	28.756	28.718	0.000
Vs	Velocity of Exhaust Gas	fpm	2495.10	2939.90	0.00
I	Percent Isokinetic	Percent	98.602	100.431	0.000
Cf	Particulate Concentration (Front)	Grain/dscf	0.0025	0.0024	0.0000
Ct	Particulate Concentration (Total)	Grain/dscf	0.0144	0.0029	0.0000
Cfa	Actual Particulate Conc. (Front)	Grain/acf	0.0021	0.0020	0.0000
Cta	Actual Particulate Conc. (Total)	Grain/acf	0.0122	0.0024	0.0000
ERf	Emission Rate (Front Half)	lbs/hr	0.57	0.63	0.00
ERt	Emission Rate (Total)	lbs/hr	3.29	0.77	0.00

* IF THE WATER CALCULATED AT SATURATION IS LESS THAN THE COLLECTED WATER, THE SATURATION MOISTURE IS USED IN ALL SUCCEEDING CALCULATIONS.

SAMPLE EQUATIONS

```
Ps = Pb+(Pstat/13.6)

As = Ds^2/576.*PI

Vmstd = 17.65*Vm*(Pb+dH/13.6)/(Tm+460.)

Vw = .04715*Wtwc

Bwo = Vw/(Vmstd+Vw)

Xd = 1.0-Bwo

Md = N2*.28+O2*.32+CO2*.44+CO*.28

Ms = Md*Xd+18.*Bwo

Vs = 5123.8*Cp*SQR((Ts+460.)/Ps*Ms))*dPsqrt

%I = 1039.0*(Ts+460.)*Vmstd/(Xd*Ps*Tt*Vs*Dn^2)

Qa = Vs*As

Qs = Qa*Xd*17.65*Ps/(Ts+460.)

Cf = Mf*.01543/Vmstd

Ct = Mt*.01543/Vmstd

Cfa = 17.65*Cf*Ps*Xd/(Ts+460.)

Cta = 17.65*Ct*Ps*Xd/(Ts+460.)

ERf = .00857*Cf*Qs

ERt = .00857*Ct*Qs
```

STACK EMISSIONS SURVEY Hand Calculations

USS Geneva Coke Plant Baghouse - Stacks #11, #12, #16, #17

SOURCE EMISSIONS CALCULATIONS

Particulate Train

Symbol	Description	Unit	#11 Run Number 1	#12 2	#16 3	#17 4
Date			28 Dec '82	29 Dec '82	28 Dec '82	29 Dec '82
Begin	Time		08:41	08:36	08:40	0836
End	Time		16:44.5	16:28.5	16:41.5	16:28.5
P_b	Barometric Preasure	"Hg Abs.	25.79	25.66	25.79	25.66
P_m	Orifice Preasure Drop	"H2O	0.94	0.56	0.95	0.73
V_m	Volume Dry Gas Sampled @ Meter Conditions	$Ft.^3$	52.843	43.566	61.844	55.702
T_m	Ave. Gas Meter Temp.	°F	36.0	39.3	34.7	36.1
$V_{m\ std}$	Volume Dry Gas Sampled @ Std. Conditions *	dscf	48.627	39.581	57.059	50.958
V_w	Total H_2O Collected, Impingers & Silica Gel	ml	16.8	6.6	18.6	12.3
$V_{w\ gas}$	Volume Water Vapor Collected @ Std. Cond. *	scf	.792	.311	.877	.580
% M	Moisture in Stack, Gas by Volume	%	1.6	0.8	1.5	1.1
M_d	Mol Fraction of Dry Gas		.984	.992	.985	.989
CO	Fraction of Gas	%	0.0	0.0	0.0	0.0
CO_2	Fraction of Gas	%	0.0	0.0	0.0	0.0
O_2	Fraction of Gas	%	21.0	21.0	21.0	21.0
N_2	Fraction of Gas	%	79.0	79.0	79.0	79.0
MW_d	Molecular Weight of Dry Stack Gas	lb/lb mole (g/g mole)	28.84	28.84	28.84	28.84
MW	Molecular Weight of Stack Gas	lb/lb mole (g/g mole)	28.667	28.753	28.677	28.721
$\sqrt{\Delta P_s}$ Ave.	Velocity Head of Stack Gas	"H_2O	.8351	.6830	.9066	.7991
T_s	Stack Temperature	°F	74.5	71.2	79.1	78.0
P_s	Stack Preasure	"Hg Abs.	25.74	25.64	25.74	25.64
V_s	Stack Velocity @ Stack Conditions	fpm	3059.1	2495.3	3334.7	2937.7
A_s	Stack Area	$in.^2$	1809.6	1809.6	1809.6	1809.6

* 68 °F, 29.92 " Hg

Symbol	Description	Unit	Run Number 1 (#11)	2 (#12)	3 (#16)	4 (#17)
Q_s	Dry Stack Gas Volume @ Std. Conditions *	DSCFM	32152.5	26500.8	34785.4	30732.6
Q_a	Actual Stack Gas Volume @ Stack Conditions	ACFM	38442.7	31357.6	41906.1	36942.2
T_t	Net Time of Test	min.	110	110	110	110
D_n	Sampling Nozzle Dia.	in.	.179	.179	.186	.186
%I	Percent Isokinetic	%	98.9	97.7	100.4	100.4
m_f	Particulate - Probe & Filter	mg	16.75	6.54	12.50	7.95
m_t	Particulate - Total	mg	17.60	37.35	15.65	9.6
C_{an}	Particulate - Probe & Filter	gr/dscf *	.0053	.0025	.0034	.0024
C_{ao}	Particulate - Total	gr/dscf *	.0056	.0146	.0042	.0029
C_{at}	Particulate - Probe & Filter @ Stack Conditions	gr/cf	.0044	.0021	.0028	.0020
C_{au}	Particulate - Total @ Stack Conditions	gr/cf	.0047	.0123	.0035	.0024
C_{aw}	Particulate - Probe & Filter	lbs/hr	1.46	.57	1.01	0.63
C_{ax}	Particulate - Total	lbs/hr	1.54	3.32	1.25	0.76

* 68 °F, 29.92" Hg

#11

SOURCE EMISSIONS CALCULATIONS

$$Q_a = \frac{V_s \times A_s}{144} = \frac{3059.1 \times 1809.6}{144} = 38442.7$$

$$Q_s = Q_a \times \frac{M_d \times 17.65 \times P_s}{T_s + 460} = 38442.7 \frac{\times .984 \times 17.65 \times 25.74}{534.5 + 460} = 32152.5$$

$$C_{at} = \frac{17.65 \times C_{an} \times P_s \times M_d}{T_s + 460} = \frac{17.65 \times .0053 \times 25.74 \times .984}{534.5 + 460} = .0047$$

$$C_{au} = \frac{17.65 \times C_{ao} \times P_s \times M_d}{T_s + 460} = \frac{17.65 \times .0056 \times 25.74 \times .984}{534.5 + 460} = .0047$$

$$C_{aw} = .00857 \times C_{an} \times Q_s = .00857 \times .0053 \times 32152.5 = 1.46$$

$$C_{ax} = .00857 \times C_{ao} \times Q_s = .00857 \times .0056 \times 32152.5 = 1.54$$

$$C_{an} = \frac{m_f \times .01543}{V_{m_{std}}} = \frac{16.75 \times .01543}{48.627} = .0053$$

$$C_{ao} = \frac{m_t \times .01543}{V_{m_{std}}} = \frac{17.6 \times .01543}{48.627} = .0056$$

16

SOURCE EMISSIONS CALCULATIONS

$$Q_a = \frac{V_s \times A_s}{144} = \frac{3334.7 \times 1809.6}{144} = 41906.1$$

$$Q_s = Q_a \times \frac{M_d \times 17.65 \times P_s}{T_s + 460} = 41906.1 \frac{\times .985 \times 17.65 \times 25.74}{539.1 + 460} = 34785.4$$

$$C_{at} = \frac{17.65 \times C_{an} \times P_s \times M_d}{T_s + 460} = \frac{17.65 \times .0034 \times 25.74 \times .985}{539.1 + 460} = .0028$$

$$C_{au} = \frac{17.65 \times C_{ao} \times P_s \times M_d}{T_s + 460} = \frac{17.65 \times .0042 \times 25.74 \times .985}{539.1 + 460} = .0035$$

$$C_{aw} = .00857 \times C_{an} \times Q_s = .00857 \times .0034 \times 34785.4 = 1.01$$

$$C_{ax} = .00857 \times C_{ao} \times Q_s = .00857 \times .0042 \times 34785.4 = 1.25$$

$$C_{an} = \frac{m_f \times .01543}{V_{m_{std}}} = \frac{12.5 \times .01543}{57.059} = .0034$$

$$C_{ao} = \frac{m_t \times .01543}{V_{m_{std}}} = \frac{15.65 \times .01543}{57.059} = .0042$$

#12

SOURCE EMISSIONS CALCULATIONS

$$Q_a = \frac{V_s \times A_s}{144} = \frac{2495.3 \times 1809.6}{144} = 31357.6$$

$$Q_s = Q_a \times \frac{M_d \times 17.65 \times P_s}{T_s + 460} = 31357.6 \frac{\times .992 \times 17.65 \times 25.64}{+ 460} = 26500.8$$

531.2

$$C_{at} = \frac{17.65 \times C_{an} \times P_s \times M_d}{T_s + 460} = \frac{17.65 \times .0025 \times 25.64 \times .992}{+ 460} = .0021$$

531.2

$$C_{au} = \frac{17.65 \times C_{ao} \times P_s \times M_d}{T_s + 460} = \frac{17.65 \times .0146 \times 25.64 \times .992}{+ 460} = .0123$$

531.2

$$C_{aw} = .00857 \times C_{an} \times Q_s = .00857 \times .0025 \times 26500.8 = 0.57$$

$$C_{ax} = .00857 \times C_{ao} \times Q_s = .00857 \times .0146 \times 26500.8 = 3.32$$

$$C_{an} = \frac{m_f \times .01543}{V_{m_{std}}} = \frac{6.45 \times .01543}{39.581} = .0025$$

$$C_{ao} = \frac{m_t \times .01543}{V_{m_{std}}} = \frac{37.35 \times .01543}{39.581} = .0146$$

USS Geneva Coke Plant - Shed baghouse # 17

TIMP ENVIRONMENTAL TESTING CO.

ISOKINETIC CALCULATION

P_b = 25.66 V_m = 55.702 V_w = 12.3

P_m = .734 " H_2O Ave. ΔP = — Ave. $\sqrt{\Delta P}$ = .7991

C_p = .84 D_n = .186 T_t = 110 min.

P_s = -.28 " H_2O 25.64 " H_g

T_m = 36.1 °F 496.1 °R

T_s = 78 °F 538 °R

$\%M$ = 1.1 $M_d = \frac{100 - \%M}{100}$ = .989 MW_d = 28.84 $MW = M_d \times MW_d + (\%M \times 18)$

= 28.721 ✓

$$V_{m_{std}} = 17.65\ V_m \left(\frac{P_b + \frac{P_m}{13.6}}{T_m + 460} \right) = 17.65 \times 55.702 \left(\frac{25.66 + \frac{.734}{13.6}}{496.1} \right) = 50.958 \checkmark\ sft^3$$

$$V_{w_{gas}} = 0.04715 \times V_w = 0.04715 \times 12.3 = .580 \checkmark\ sft^3$$

$$\%M = \frac{V_{w_{gas}}}{V_{m_{std}} + V_{w_{gas}}} \times 100 = \frac{.580}{50.958 + .580} \times 100 = 1.1\ \%$$

$$V_s = 5123.8 \times .84\ (C_p) \sqrt{\frac{538\ (T_s)}{25.64\ (P_s) \times 28.721\ (MW)}} \times .7991\ (Ave\sqrt{\Delta P}) = 2939.7 \checkmark\ fpm$$

$$\%I = \frac{1039 \times 538\ (T_s) \times 50.958\ (V_{m_{std}})}{.989\ (M_d) \times 25.64\ (P_s) \times 110\ (T_t) \times 2939.7\ (V_s) \times .034596\ (D_n^2)} = 100.4\ \%I \checkmark$$

$$m_f = \frac{7.95 \times .01543}{50.958} = .0024 \qquad m_t = \frac{9.6 \times .01543}{50.958} = .0029$$

USS Geneva Coke Plant – Shed Baghouse #11

TIMP ENVIRONMENTAL TESTING CO.

ISOKINETIC CALCULATION

P_b = 25.79 V_m = 52.843 V_w = 16.8

P_m = .94 " H_2O Ave. ΔP = — Ave. $\sqrt{\Delta P}$ = .8351

C_p = .84 D_n = .179 T_t = 110 min.

P_s = -.64 "H_2O 25.74 "H_g

T_m = 36.0 °F 496 °R

T_s = 74.5 °F 534.5 °R

$\%M$ = 1.6 $M_d = \frac{100 - \%M}{100}$ = .984 MW_d = 28.84 $MW = M_d \times MW_d + (\%M \times 18)$

= 28.667 ✓

$$V_{m_{std}} = 17.65\ V_m \left(\frac{P_b + \frac{P_m}{13.6}}{T_m + 460} \right) = 17.65 \times 52.843 \left(\frac{25.86 + \frac{\ }{13.6}}{496} \right) = 48.627\ ✓\ sft^3$$

$$V_{w_{gas}} = 0.04715 \times V_w = 0.04715 \times 16.8 = .792\ ✓\ sft^3$$

$$\%M = \frac{V_{w_{gas}}}{V_{m_{std}} + V_{w_{gas}}} \times 100 = \frac{.792}{48.627 + .792} \times 100 = 1.6\ ✓\ \%$$

$$V_s = 5123.8 \times .84\ (C_p) \sqrt{\frac{534.5\ (T_s)}{25.74\ (P_s) \times 28.667\ (MW)}} \times .8351\ (Ave.\sqrt{\Delta P}) = 3059.1\ ✓\ fpm$$

$$\%I = \frac{1039 \times 534.5\ (T_s) \times 48.627\ (V_{m_{std}})}{.984\ (M_d) \times 25.74\ (P_s) \times 110\ (T_t) \times 3059.1\ (V_s) \times .03204\ (D_n^2)} = 98.9\ ✓\ \%I$$

$$m_f = \frac{16.75 \times .0153}{48.627} = .0053 \qquad m_t = \frac{17.6 \times .0153}{48.627} = .0056$$

USS Geneva Coke Plant – Shed baghouse #16

TIMP ENVIRONMENTAL TESTING CO.

ISOKINETIC CALCULATION

P_b = 25.79 V_m = 61.844 V_w = 18.6

P_m = .95 " H_2O Ave. ΔP = —— Ave. $\sqrt{\Delta P}$ = .9066

C_p = .84 D_n = .186 T_t = 110 min.

P_s = -.72 "H_2O 25.74 "H_g

T_m = 34.7 °F 494.7 °R

T_s = 79.1 °F 539.1 °R

$\%M$ = 1.5 $M_d = \frac{100 - \%M}{100}$ = .985 MW_d = 28.84 $MW = M_d \times MW_d + (\%M \times 18)$

= 28.677 ✓

$$V_{m_{std}} = 17.65\ V_m \left(\frac{P_b + \frac{P_m}{13.6}}{T_m + 460} \right) = 17.65 \times 61.844 \left(\frac{25.79 + \frac{.95}{13.6}}{494.7} \right) = 57.059\ sft^3$$ ✓

$$V_{w_{gas}} = 0.04715 \times V_w = 0.04715 \times 18.6 = .877\ sft^3$$ ✓

$$\%M = \frac{V_{w_{gas}}}{V_{m_{std}} + V_{w_{gas}}} \times 100 = \frac{.877}{57.059 + .877} \times 100 = 1.5\ \%$$ ✓

$$V_s = 5123.8 \times .84\ (C_p) \sqrt{\frac{539.1\ (T_s)}{25.74\ (P_s) \times 28.677\ (MW)}} \times .9066\ (Ave.\sqrt{\Delta P}) = 3334.7\ fpm$$ ✓

$$\%I = \frac{1039 \times 539.1\ (T_s) \times 57.059\ (V_{m_{std}})}{.985\ (M_d) \times 25.74\ (P_s) \times 110\ (T_t) \times 3334.7\ (V_s) \times .034225\ (D_n^2)} = 100.4\ \%I$$ ✓

m_f = m_t =

USS Geneva Coke Plant- Shed baghouse # 12

TIMP ENVIRONMENTAL TESTING CO.

ISOKINETIC CALCULATION

P_b = 25.66 V_m = 43.566 V_w = 6.6

P_m = .558 "H_2O Ave. ΔP = — Ave. $\sqrt{\Delta P}$ = .6830

C_p = .84 D_n = .179 T_t = 110 min.

P_s = -.26 "H_2O 25.640 "H_g

T_m = 39.3 °F 499.3 °R

T_s = 71.2 °F 531.2 °R

%M = .8 $M_d = \frac{100 - \%M}{100}$ = .992 MW_d = 28.84 $MW = M_d \times MW_d + (\%M \times 18)$ = 28.753

$$V_{m_{std}} = 17.65\ V_m \left(\frac{P_b + \frac{P_m}{13.6}}{T_m + 460} \right) = 17.65 \times 43.566 \left(\frac{25.66 + \frac{.558}{13.6}}{499.3} \right) = 39.581\ sft^3$$

$$V_{w_{gas}} = 0.04715 \times V_w = 0.04715 \times 6.6 = .311\ sft^3$$

$$\%M = \frac{V_{w_{gas}}}{V_{m_{std}} + V_{w_{gas}}} \times 100 = \frac{.311}{39.581 + .311} \times 100 = 0.8\ \%$$

$$V_s = 5123.8 \times .84\ (C_p) \sqrt{\frac{531.2\ (T_s)}{25.640\ (P_s) \times 28.753\ (MW)}} \times .6830\ (Ave.\sqrt{\Delta P}) = 2495.3\ fpm$$

$$\%I = \frac{1039 \times 531.2\ (T_s) \times 39.581\ (V_{m_{std}})}{.992\ (M_d) \times 25.640\ (P_s) \times 110\ (T_t) \times 2495.3\ (V_s) \times .032041\ (D_n^2)} = 97.7\ \%I$$

$$m_f = \frac{6.45 \times .01543}{39.581} = .0025 \qquad m_t = \frac{37.35 \times .01543}{39.581} = .0146$$

#17

SOURCE EMISSIONS CALCULATIONS

$$Q_a = \frac{V_s \times A_s}{144} = \frac{2939.7 \times 1809.6}{144} = 36942.2$$

$$Q_s = Q_a \times \frac{M_d \times 17.65 \times P_s}{T_s + 460} = 36942.2 \frac{\times .989 \times 17.65 \times 25.64}{538} = 30732.6$$

$$C_{at} = \frac{17.65 \times C_{an} \times P_s \times M_d}{T_s + 460} = \frac{17.65 \times .0024 \times 25.64 \times .989}{538} = .0020$$

$$C_{au} = \frac{17.65 \times C_{ao} \times P_s \times M_d}{T_s + 460} = \frac{17.65 \times .0029 \times 25.64 \times .989}{538} = .0024$$

$$C_{aw} = .00857 \times C_{an} \times Q_s = .00857 \times .0024 \times 30732.6 = 0.63$$

$$C_{ax} = .00857 \times C_{ao} \times Q_s = .00857 \times .0029 \times 30732.6 = 0.76$$

$$C_{an} = \frac{m_f \times .01543}{V_{m_{std}}} = \frac{7.95 \times .01543}{50.958} = .0024$$

$$C_{ao} = \frac{m_t \times .01543}{V_{m_{std}}} = \frac{9.6 \times .01543}{50.958} = .0029$$

Raw Field Data:

PROBE 5-8 C = 1.1

Plant USS Geneva Coke Plant

Location Shed Baghouse #11

Date 12/28/82

Run Number I

Operator Paul Wavis

Sample Box Number II

Meter Box Number II

Page Number 1 of 3

PARTICULATE FIELD DATA

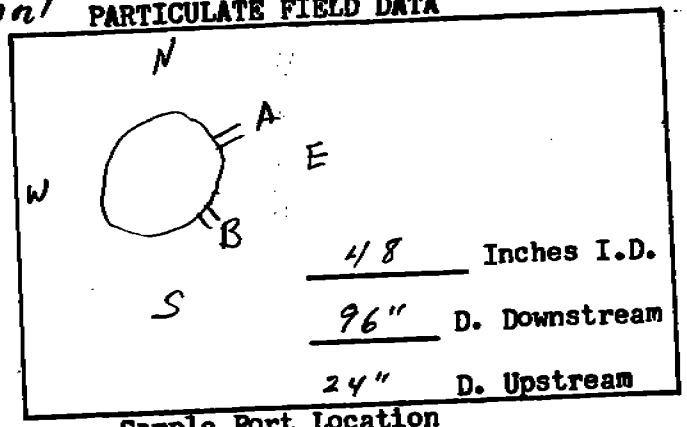

Sample Port Location

Filter Number 244

Sample Train Leak Check

Initial ● 0 "Hg = 23 cfm

Final ● -.002 "Hg = 11 cfm

Pitot Tube Leak Check

Initial ● 0 "H2O = 8

Final ● 0 "H2O = 8

Ready To Start Test

Read And Record At The Start Of Each Test Point

Port & Trav. Point	Time Clock	Time Stop W.	Dry Gas Meter, cf	ΔP Pitot Dif. in. H2O	ΔH Meter Pres. in. H2O Desired	ΔH Meter Pres. in. H2O Actual	Pump Vacuum in. Hg Gauge	Stack Temp. °F (Ts)	Probe Temp. °F	Oven Temp. °F	Effluent Temp. °F Out	Effluent Temp. °F In	Dry Gas Temp. °F Out (Tm)	Dry Gas Temp. °F In (Tm)	Stack Static Pres. In. H2O	Oven Pushed Battery 3	Oven Pushed Battery 4
Corrected Clock Time	Start	Start															
1-3	841	843½ 0	7331.819	.75	.82	.82	2.0	61	250	250	30	100	25	25	-.64	52	
																62	
1	858½	861 2½	32.2	1.2	1.3	1.3	2.0	50	260	260	35	120	28	30		68	
0853 2	905½	908 5	33.2	1.3	1.4	1.4	2.0	70	260	260	40	130	28	30		1	
3	913	915½ 7½	34.4	1.3	1.4	1.4	2.0	71	250	260	40	120	27	30		4	
4	926	928½ 10	35.5	1.5	1.7	1.7	2.0	72	250	250	40	115	29	30		11	
5	931	933½ 12½	36.7	1.4	1.5	1.5	2.0	75	250	240	40	130	29	31		14	
6	938	940½ 15	37.9	1.3	1.4	1.4	2.0	78	260	250	45	182	30	33		21	
7	944	947½ 17½	39.0	1.3	1.4	1.4	2.0	79	260	260	49	140	30	35		24	
8	950	952½ 20	40.1	1.2	1.3	1.3	2.0	82	250	255	50	149	30	35		31	
9	1003	1005½ 22½	41.1	1.2	1.3	1.3	2.0	80	240	260	42	140	30	35		41	
10	1007	1009½ 25	42.3	.70	.78	.78	1.5	80	240	250	42	130	30	35		34	
1011 11	1020	1022½ 27½	43.0	.45	.50	.50	1.5	78	250	250	40	100	30	35			
12																	
Page, Run Totals			43.655	12.6285		14.8		876					719				
Ave.				1.0521		1.2		73					30.0				

Pitot Tube Calibration Factor C_p .84 Barometric Pressure P_b 25.79 "Hg Assumed Moisture 4 %

Volume Collected V_m 52.32 (Meter Vol.) x 1.01 (Meter Cal. Factor) = 53.366 ~~52.843~~ cf Water Collected W_w 16.8 g.

Nozzle Calibration A .179, B .179, C .179, D .180 = Ave. .179 in. D_n. Time of Test 110 min. T_t

%CO2 21.0 %O2 0 %CO 79.0 %N2 Mf MT

Plant USS Geneva Coke Plant — PARTICULATE FIELD DATA — Date 12/28/82 — Run Number I

Page 2 of 3

LOCATION Shed Baghouse # 11

Port & Trav. Point	Time Clock (Corrected Clock Time)	Time Stop W.	Dry Gas Meter, cf	P Pitot Dif. in. H_2O	P_m Meter Pres. in. H_2O Desired	P_m Meter Pres. in. H_2O Actual	Pump Vacume in. Hg Gauge	T_s Stack Temp. F	Probe Temp. F	Oven Temp. F	Effluent Temp. F Out	Effluent Temp. F In	T_m Dry Gas Temp. F Out	T_m Dry Gas Temp. F In	Stack Static Pres. In. H_2O	Oven Pushed Battery 3	Oven Pushed Battery 4
Port A	START	STOP															
13	1046½	1049 3	43.6	.35	.36	.36	1.5	74	250	235	40	80	30	31	51		
14	1059	1101 32½	44.3	.36	.36	.36	1.5	76	250	240	40	100	30	31	3		
15	1105	1107½ 35	44.8	.30	.41	.41	1.0	80	260	250	40	115	30	31		44	
16	1124	1126½ 37½	45.3	.29	.40	.40	1.0	81	260	260	42	100	30	33		54	
17	1131½	1134 40	45.7	.27	.38	.38	1.0	80	240	255	43	110	30	35	13		
18	1143	1145½ 42½	46.1	.25	.35	.35	1.5	80	250	255	41	120	30	37	23		
19	1155	1157½ 45	46.9	.22	.31	.31	1.5	82	260	250	45	110	35	37	33		
20	1207	1209½ 47½	47.8	.22	.31	.31	1.5	77	260	250	50	115	35	39		64	
21	1221	1223½ 50	48.7	.19	.24	.24	1.5	74	250	260	50	120	39	40		6	
22	1228	52½	49.5	.15	.21	.21	1.0	78	250	260	50	130	39	40		16	
	1230½	55	7350.179														
Port B	START	STOP															
1	1244	1246½ 55	7350.179	.56	.80	.80	2.5	51	260	250	51	135	39	40	43		
2	1252	1254½ 57½	51.4	.64	.90	.90	2.5	58	260	250	51	150	40	41	53		
3	1259	1301½ 1:00	52.8	.79	1.1	1.1	3.0	77	250	250	50	150	40	41	63		
4	1331	1:02½	54.4	.84	1.2	1.2	3.5	80	250	250	51	140	40	41		26	
5	1320	1322½ 5	56.1	.84	1.2	1.2	3.5	71	250	250	50	160	40	41	5		
6	1335	1337½ 7½	57.9	.84	1.2	1.2	3.5	71	250	250	51	140	39	40	15		
7	1348	1350½ 10	59.6	.84	1.5	1.5	4.5	70	250	250	50	140	39	40		36	
8	1358	1358½ 12½	61.3	.76	1.3	1.3	4.0	73	250	250	50	160	39	40		56	
9	1414	1416½ 15	63.1	.72	1.2	1.2	3.5	70	245	250	56	140	38	40	25		
10	1423½	1426 17½	64.8	.60	1.0	1.0	3.0	72	250	250	50	155	38	40	35		
11	1429½	1432 20	66.3	.52	.78	.78	2.5	78	255	250	52	150	38	40		66	
12	1444	1446½ 22½	67.5	.55	.84	.84	2.5	75	255	250	52	149	38	40		8	
13		25	68.8	.65	1.0	1.0	3.0	81	255	250	55	165	39	40		18	
14	1501	1503½ 27½	70.5	.70	1.1	1.1	3.5	79	255	255	60	160	39	40	45		
15	1506	1508½ 30	72.1	.74	1.1	1.1	3.5	82	255	255	60	170	39	42		38	
16	1513	1515½ 32½	73.7	.84	1.3	1.3	4.0	80	260	255	60	150	40	47	55		
17	1520	1522½ 35	75.4	.84	.94	.94	3.0	78	250	255	59	149	40	47		38	
18	1525	1527½ 37½	76.8	.91	1.0	1.0	3.0	79	250	255	49	150	40	47	65		
Page, Run Totals				20.4013		22.79		2107					2134				
Ave.																	

1308

1119

20

W-2

Plant USS Geneva Coke Plant PARTICULATE FIELD DATA Date 12/28/82 Run Number I

LOCATION Shed Baghouse #11 Page 3 of 3

Port & Trav. Point	Time Clock (Start)	Time Stop W. (Stop)	Dry Gas Meter, cf	P Pitot Dif. in. H_2O	P_m H Meter Pres. in. H_2O Desired	P_m H Meter Pres. in. H_2O Actual	Pump Vacume in. Hg Gauge	T_s Stack Temp. F	Probe Temp. F	Oven Temp. F	Effluent Temp. F Out	Effluent Temp. F In	T_m Dry Gas Temp. F Out	T_m Dry Gas Temp. F In	Stack Static Pres. In. H_2O (Oven Pushed Battery 3 4)
19 10	1534	1536½ 40	78.3	.93	1.0	1.0	3.0	79	250	250	42	138	40	48	48
20	16.10	16 12½ 42½	79.8	.93	1.0	1.0	3.0	70	250	250	49	120	39	40	58
21	16.25	16 27½ 45	81.3	.88	.99	.99	3.0	74	248	250	50	140	38	39	68
22	16 42	1644½ 47½	82.8	.72	.81	.81	2.5	72	248	250	49	130	32	35	7
	16 44½	50	7384.139												
Page, Run Totals				✓ 3.7153		3.8		295					311		
Ave.				✓ 36.7451 ✓ .835 ✓		41.39 ✓ .94 ✓		3278 ✓ 74.5 ✓					3164 ✓ 36.0 ✓		

13-3

Probe 5-A c

Plant Geneva Steel Coke Plant

Location Shed Baghouse #16

Date 12-28-82

Run Number 1

Operator JR

Sample Box Number 1

Meter Box Number 1

Page Number 1 of 3

PARTICULATE FIELD DATA

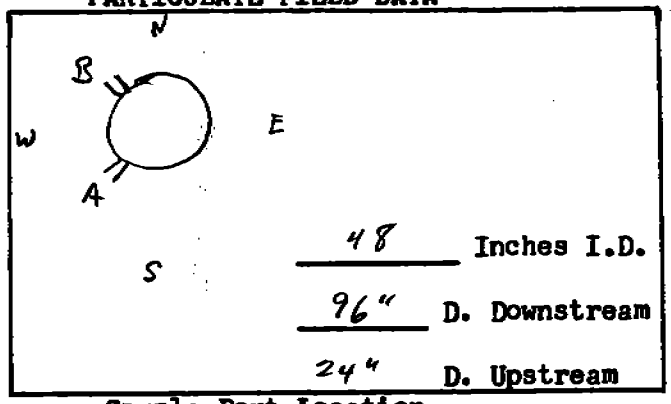

Sample Port Location

Filter Number 245

Sample Train Leak Check

Initial ● 22 "H_g = 0 cfm

Final ● 10 "H_g = 0 cfm

Pitot Tube Leak Check

Initial ● 8/8 "H_2O = 0

Final ● _____ "H_2O = _____

Ready To Start Test 8:04

Read And Record At The Start Of Each Test Point

Port & Trav. Point Point A	Time Clock	Time Stop W.	Dry Gas Meter, cf	ΔP Pitot Dif. in. H_2O	ΔH Meter Pres. in. H_2O Desired	ΔH Meter Pres. in. H_2O Actual	Pump Vacuum in. Hg Gauge	Stack Temp. °F (T_s)	Probe Temp. °F	Oven Temp. °F	Effluent Temp. °F Out	Effluent Temp. °F In	Dry Gas Temp. °F Out (T_m)	Dry Gas Temp. °F In (T_m)	Stack Static Pres. In. H_2O (P_m)	Oven Pushed Battery 3	Oven Pushed Battery 4
1	840	0	8132.495	1.1	1.18	1.18	3	80	260	250	32	140	30	40	-.72		52
2	843	2.5	34.15	1.4	1.5	1.5	4	80	250	250	37	145	30	35			62
3	905	5	35.97	1.6	1.7	1.7	4	75	240	250	41	160	31	31		68	
4	912	7.5	37.91	1.6	1.7	1.7	4	75	260	250	40	160	31	31		1	
5	926	10	39.85	1.6	1.7	1.7	4	76	230	250	42	150	30	30			4
6	931	12.5	41.82	1.6	1.7	1.7	4	80	250	250	42	155	30	30		11	
7	937	15	43.76	1.6	1.7	1.7	4	81	260	250	47	170	30	31			14
8	943	17.5	45.70	1.5	1.6	1.6	4	84	250	250	50	170	30	32		21	
9	949	20	47.59	1.4	1.5	1.5	4	86	240	260	50	170	30	32			24
10	1002	22.5	49.45	1.1	1.18	1.18	3	85	240	260	51	160	31	31		31	
11	1010	25	51.12	.85	.92	.92	3	86	240	250	48	160	30	30		41	
12	1019	27.5	52.70	.5	.52	.52	2	84	255	250	47	150	30	30			34
Page, Run Totals			53.682	13.6424		16.9		942					746				
Ave.				1.1369		1.41		78.4									

Pitot Tube Calibration Factor C_p .84 Barometric Preasure P_b 25.79 "H_g Assumed Moisture 4 %

Volume Collected V_m 62.469 (Meter Vol.) x .99 (Meter Cal. Factor) = 61.844 cf Water Collected W_w 18.6 g.

Nozzle Calibration A .187, B .186, C .186, D .186 = Ave. .186 in. D_n. Time of Test 110 min. T_t

Gas Analysis - 0 %CO2 21.0 %O2 0 %CO 79.0 %N2 MF 12.5 mg MT 15.65 mg

Plant Geneva Steel — PARTICULATE FIELD DATA — Date 12-15-82 — Run Number 1

LOCATION Coke Plant Baghouse Stack 16 — Page 2 of 3

Port & Trav. Point	Time Clock	Time Stop W.	Dry Gas Meter, cf	P Pitot Dif. in. H_2O	P_m H Meter Pres. in. H_2O Desired	Actual	Pump Vacume in. Hg Gauge	T_s Stack Temp. F	Probe Temp. F	Oven Temp. F	Effluent Temp. F Out	Effluent Temp. F In	T_m Dry Gas Temp. F Out	Dry Gas Temp. F In	Stack Static Pres. In. H_2O	Oven Pushed Battery 3	Oven Pushed Battery 4
13	1046	30	53.65	.38	.40	.40	2	81	250	250	49	120	30	30		51	
14	1059	32.5	54.63	.38	.32	.32	2	81	250	250	43	110	30	29		3	
15	1104	35	55.52	.28	.3	.3	2	85	246	250	41	140	29	29			44
16	1118	37.5	56.36	.28	.3	.3	2	86	230	250	50	120	29	30			54
17	1131	40	57.22	.25	.27	.27	2	86	240	250	51	120	30	30		13	
18	1143	42.5	57.98	.25	.27	.27	2	86	230	250	51	120	30	30		23	
19	1155	45	58.75	.25	.27	.27	2	87	260	240	52	130	32	32		33	
20	1206	47.5	59.53	.28	.3	.3	2	83	270	250	52	190	35	36			64
21	1218	50	60.38	.25	.27	.27	2	79	240	250	50	140	37	35			6
22	1230	52.5	61.19	.25	.27	.27	2	82	242	250	48	140	37	36			16
		55	61.96														
Port B																	
1	1243	55	61.96	.45	.48	.48	2	67	260	250	43	145	32	32		43	
2	1251	57.5	62.57	.50	.52	.52	2.5	74	240	240	41	150	33	33		53	
3	1259	60	64.12	.70	.75	.75	3	78	250	250	40	160	32	32		63	
4	1308	62.5	65.43	.65	.70	.70	3	81	250	250	40	170	32	32			26
5	1320	65	66.70	.8	.75	.75	3	74	240	240	41	148	33	33		5	
6	1334	67.5	68.06	.80	.86	.86	3.0	78	265	250	42	150	33	34		15	
7	1348	70	69.44	.80	.86	.86	3.0	72	240	250	47	142	35	35			36
8	1355	72.5	71.87	.77	.82	.82	2.5	73	240	250	42	155	35	35			56
9	1400	75	72.28	.75	.80	.80	2.5	73	250	255	49	150	35	36		25	
10	1423	77.5	73.60	.75	.80	.80	2.5	75	250	255	51	153	38	38		35	
11	1429	80	75.00	.67	.77	.77	2.5	79	250	260	51	150	38	39			66
12	1443	82.5	76.31	.80	.86	.86	3.0	77	260	260	52	170	38	39			8
13	1459	85	77.68	1.0	1.1	1.1	3.0	84	240	260	44	170	39	40			18
14		87.5	79.27	1.1	1.2	1.2	3.0	82	245	255	42	180	40	41		45	
15	1506	90	80.90	1.2	1.3	1.3	3.5	84	250	250	42	190	40	42			28
16	1513	92.5	82.58	1.2	1.3	1.3	3.5	82	250	250	41	165	41	43		55	
17	1519	95	84.32	1.5	1.6	1.6	4.0	80	260	250	41	190	42	45			38
Page, Run Totals				20.6849		18.4		2150					1881				
Ave.																	

43-3
53-3
63
26
15-3
26-4
25-3
Corrected Clock 1414

Plant GENEVA

PARTICULATE FIELD DATA

Date 12/28/82 Run Number 1

LOCATION COKE PLANT BAGHOUSE STACK 16

Page 3 of 3

Port & Trav. Point	Time Clock (corrected clock time)	Time Stop W.	Dry Gas Meter, cf	P Pitot Dif. in. H_2O	P_m H Meter Pres. in. H_2O Desired	P_m H Meter Pres. in. H_2O Actual	Pump Vacume in. Hg Gauge	T_s Stack Temp. F	Probe Temp. F	Oven Temp. F	Effluent Temp. F Out	Effluent Temp. F In	T_m Dry Gas Temp. F Out	T_m Dry Gas Temp. F In	Stack Static Pres. In. H_2O	Oven Pushed Battery 3	Oven Pushed Battery 4
18	1525	77.5	86.21	1.3	1.4	1.4	3.5	82	250	250	42	195	43	47		65	
19	1534	100	87.99	1.3	1.4	1.4	3.5	82	240	260	48	155	45	47			48
20	1609	102.5	89.77	1.3	1.4	1.4	3.5	73	255	265	45	170	44	41			58
21	1629	105	91.58	1.2	1.3	1.3	3.0	78	250	235	49	140	42	40			68
22	1639	102.5	93.30	1.1	1.2	1.2	3.0	75	240	250	47	150	39	37		7	
16 hr		110	8194.964														
Page, Run Totals				5.5648				390						425			
Ave.				39.8921 .9066		42.0 .95		348.2 79.1						305.2 34.7			

@10 .001 13-6 9-31

Probe 5-B

Plant USS Geneva Coke Plant

Location Shed No. Baghouse #12

Date 12/29/82

Run Number ~~II~~ 1

Operator Boyd J Davis

Sample Box Number II

Meter Box Number II

Page Number 1 of 3

PARTICULATE FIELD DATA

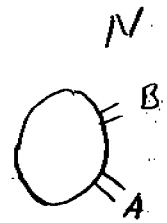

48 Inches I.D.

96 D. Downstream

24 D. Upstream

Sample Port Location

Filter Number 247

Sample Train Leak Check

Initial @ 0 "Hg = 22 cfm

Final @ 10 "Hg = .001 cfm

Pitot Tube Leak Check

Initial @ 0 "H2O = 8

Final @ 0 "H2O = 8

Ready To Start Test 750

Read And Record At The Start Of Each Test Point

Corrected Clock Time	Port & Trav. Point	Time Clock	Time Stop W.	Dry Gas Meter, cf	ΔP Pitot Dif. in. H2O	ΔH Meter Pres. in. H2O Desired	ΔH Meter Pres. in. H2O Actual	Pump Vacuum in. Hg Gauge	Stack Temp. °F (T_s)	Probe Temp. °F	Oven Temp. °F	Effluent Temp. °F Out	Effluent Temp. °F In	Dry Gas Temp. °F Out (T_m)	Dry Gas Temp. °F In (T_m)	Stack Static Pres. In. H2O	Oven Pushed Battery 3	Oven Pushed Battery 4
	Port A																	
1		836	838½ 0	7384.861	.52	.56	.56	2.0	49	240	250	45	125	25	27	-.26		52
2		850	852½ 2½	85.8	.54	.59	.59	2.0	47	250	250	52	125	27	32		68	
3	0904	903	905½ 5	86.9	.72	.81	.81	3.0	77	260	260	55	140	30	32		1	
4		917	919½ 7½	88.1	.75	.84	.84	3.0	73	245	260	55	150	30	35			62
5		923	925½ 10	89.5	.75	.84	.84	3.0	74	250	250	52	155	31	39		11	
6		929	931½ 12½	90.8	.73	.80	.80	3.0	82	250	250	52	140	31	39			4
7		937	939½ 15	92.2	.65	.72	.72	2.5	79	250	250	52	150	35	40		21	
8		945	947½ 17½	93.4	.59	.64	.64	2.5	82	255	250	52	150	39	40			14
9		953	1001½ 20	94.6	.50	.55	.55	2.0	78	260	255	55	150	39	40		31	
10		1012½	1015 22½	95.7	.46	.50	.50	2.0	71	255	250	55	140	39	40		41	
11		1022	1024½ 25	96.7	.33	.37	.37	1.5	71	250	250	55	135	39	40			24
12		1045	1047½ 27½	97.6	.23	.25	.25	1.5	68	250	250	52	125	39	40		51	
Page, Run Totals				98.4	8.9047		7.47		851					448				
Ave.					.7421		.62		70.9					35.3				

Pitot Tube Calibration Factor C_p .84 Barometric Preasure P_b 25.66 "Hg Assumed Moisture 2 %

Volume Collected V_m 43.135 (Meter Vol.) x ~~1.01~~ 1.02 (Meter Cal. Factor) = ~~43.566~~ 43.998 cf Water Collected W_w 6.6 g.

Nozzle Calibration A ____, B ____, C ____, D ____ = Ave. .179 in. D_n. Time of Test 110 min. T_t

Gas Analysis - 0 %CO2 21.0 %O2 0 %CO 79.0 %N2

Mf 6.45 mg MT 37.35 mg.

Plant 9155 Ganeva Coke Plant PARTICULATE FIELD DATA Date 12/29/82 Run Number II

LOCATION Shed Baghouse # 12 Page 2 of 3

Port & Trav. Point	Time Clock	Time Stop W.	Dry Gas Meter, cf	P Pitot Dif. in. H_2O	P_m H Meter Pres. in. H_2O Desired	Actual	Pump Vacume in. Hg Gauge	T_s Stack Temp. F	Probe Temp. F	Oven Temp. F	Effluent Temp. F Out	In	T_m Dry Gas Temp. F Out	In	Stack Static Pres. In. H_2O	Oven Pushed Battery 3	4
Port A	START	STOP															
13	1056	1058½ 30	98.4	.30	.33	.33	1.5	68	250	250	55	135	39	41		3	
14	1104	1106½ 32½	99.2	.40	.44	.44	1.5	68	250	250	55	148	39	42			34
15	1110	1112½ 35	7400.0	.45	.50	.50	1.5	71	250	250	55	148	39	45		13	
16	1117	1119½ 37½	00.9	.52	.55	.59	2.0	74	250	250	52	148	39	45			44
17	1130	1132½ 40	01.9	.59	.64	.64	2.5	70	250	255	50	140	40	45		33	
18	1143	1145½ 42½	03.1	.55	.59	.59	2.5	71	250	255	52	142	40	45		33	
19	12.11	1113½ 45	04.2	.55	.59	.59	2.5	68	250	250	52	130	39	40			64
20	12.19½	1222 47½	05.4	.56	.59	.59	2.5	89	250	250	52	125	39	40			6
21	1238	1210½ 50	06.2	.44	.46	.46	2.0	67	250	250	52	140	39	40		53	
22	1244½	1249 52½	07.0	.35	.56	.56	2.5	68	250	250	52	150	39	40		63	
	1247	55	7408.153														
				Change	ports												
Port B	START	STOP															
1	13.00	13.02½ 55	7408.153	.72	1.2	1.2	4.0	50	250	250	52	145	39	41			16
2	13.14	1316½ 57½	09.7	.89	.92	.92	3.5	59	255	250	52	165	39	41			26
3	1326½	1328 60	11.2	.97	1.0	1.0	3.5	69	260	255	55	160	40	42			36
4	1337½	1340 1:02½	12.7	.95	1.0	1.0	3.5	69	250	255	55	150	40	42		5	
5	1348	1350½ 5	14.2	.95	1.0	1.0	3.5	68	250	255	60	135	40	42		15	
6	1405	1407½ 7½	15.7	.86	.92	.92	3.5	68	250	250	65	160	40	42		25	
7	1416	1418½ 10	17.2	.86	.92	.92	3.5	68	250	250	39	120	40	42		35	
8	1434	1436½ 12½	18.6	.78	.82	.82	3.0	68	245	250	37	130	40	42			56
9	1443	1445½ 15	20.0	.72	.79	.79	3.0	69	250	250	39	130	40	42			66
10	1454	1456½ 17½	21.3	.57	.60	.60	2.5	70	250	250	45	139	40	42			8
11	1500	1502½ 20	22.5	.45	.46	.46	2.0	71	250	250	49	150	40	42		45	
12	1505	1507½ 22½	23.5	.28	.31	.31	1.5	73	250	250	49	150	40	42			18
13	1510	1512½ 25	24.2	.24	.27	.27	1.5	79	250	250	50	149	40	45		55	
14	1515	1517½ 27½	24.8	.21	.23	.23	1.0	81	255	250	50	135	40	45			28
15	1519	1521½ 30	25.2	.18	.20	.20	1.0	81	255	250	50	141	40	49		65	
16	1525	1527½ 32½	25.6	.15	.17	.17	1.0	84	250	250	51	125	41	49			38
Page, Run Totals				✓ 18.8540		16.1 ✓		1941 ✓					2144 ✓				
Ave.				✓													

Plant USS Geneva Coke Plant PARTICULATE FIELD DATA Date 12/29/82 Run Number II

LOCATION Bag house #1 2 Page 3 of 3

Corrected Clock Time	Port & Trav. Point Pckt B	Time Clock Start	Time Stop W. Stop	Dry Gas Meter, cf	P Pitot Dif. in. H_2O	P_m Meter Pres. in. H_2O Desired	P_m Meter Pres. in. H_2O Actual	Pump Vacume in. Hg Gauge	T_s Stack Temp. F	Probe Temp. F	Oven Temp. F	Effluent Temp. F Out	Effluent Temp. F In	T_m Dry Gas Temp. F Out	T_m Dry Gas Temp. F In	Stack Static Pres. In. H_2O	Oven Pushed Battery 3	Oven Pushed Battery 4
	17	1536	1538 35	26.1	.15	.17	.17	1.0	82	250	250	51	120	42	49			48
1656	18	1557	1559½ 37½	26.4	.17	.19	.19	1.0	65	260	250	49	110	38	39			58
1703	19	1603	1605½ 40	26.8	.15	.17	.17	1.0	72	250	250	49	105	38	39		7	
1711	20	1611	1613½ 42½	27.1	.15	.17	.17	1.0	72	245	245	49	85	35	37		17	
1717	21	1616	1618½ 45	27.4	.13	.14	.14	1.0	75	240	245	40	100	35	39			1
1726	22	1624	1626½ 47½	27.7	.13	.14	.14	1.0	73	250	245	39	85	35	39		27	
			1628½ 50	7427.996														
				7427.996														
				END	TEST													
Page, Run Totals					2.2953		.98		439					465				
Ave.					30.0540		24.55		3131					3457				
					0.6830		.5580		71.2					39.3				

Probe 5-A

Plant GENEVA COKE Plant

Location Shed Baghouse # 17

Date 12/29/82

Run Number 1

Operator Cory

Sample Box Number I

Meter Box Number I

Page Number 1 of 3

PARTICULATE FIELD DATA

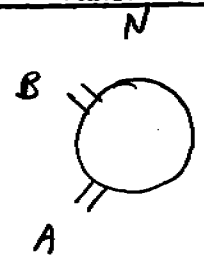

48 Inches I.D.

96 D. Downstream

24 D. Upstream

Sample Port Location

Filter Number

Sample Train Leak Check

Initial @ ___ "H_g = ___ cfm

Final @ 10 "H_g = .015 cfm

Pitot Tube Leak Check

Initial @ 1 "H_2O = 0

Final @ 8 "H_2O = 0

Ready To Start Test

Read And Record At The Start Of Each Test Point

Port & Trav. Point A	Time Clock	Time Stop W.	Dry Gas Meter, cf	ΔP Pitot Dif. in. H_2O	ΔH Meter Pres. in. H_2O Desired	ΔH Meter Pres. in. H_2O Actual	Pump Vacuum in. Hg Gauge	Stack Temp. °F (T_s)	Probe Temp. °F	Oven Temp. °F	Effluent Temp. °F Out	Effluent Temp. °F In	Dry Gas Temp. °F (T_m) Out	Dry Gas Temp. °F (T_m) In	Stack Static Pres. In. H_2O (P_m)	Oven Pushed Battery 3	Oven Pushed Battery 4
1	836		8195.477	.65	.72	.72	2.5	62	240	245	37	137	20	26	-.28		52
2	850		96.76	1.0	1.1	1.1	3.0	75	250	245	40	150	20	21		68	
3	906		99.21	1.1	1.2	1.2	3.0	77	250	245	41	180	20	21		1	
4	917		99.82	1.1	1.2	1.2	3.0	76	250	245	50	160	20	22			62
5	925		201.29	1.1	1.2	1.2	3.0	81	250	247	49	180	22	25		11	
6	929		02.33	1.1	1.2	1.2	3.0	85	250	250	49	185	23	28			4
7	937		04.56	1.0	1.1	1.1	3.0	86	250	250	50	190	28	31		21	
8	945		06.17	.94	1.0	1.0	3.0	85	250	250	50	185	30	32			14
9	959		07.68	.85	.94	.94	2.5	83	250	255	52	180	32	34		31	
10	1013		09.19	.76	.84	.84	2.5	77	240	255	50	175	32	32		41	
11	1022		10.57	.64	.70	.70	2.5	76	250	250	49	200	32	32			24
12	1045		11.88	.42	.46	.46	2.0	75	250	250	50	160	32	32		51	
Page, Run Totals			12.94	11.2128		11.66		938					647				
Ave.				.9344		.97		78.2					27.0				

Pitot Tube Calibration Factor C_p .84 Barometric Preasure P_b 25.66 "H_g Assumed Moisture 2 %

Volume Collected V_m 56.265 (Meter Vol.) x .99 (Meter Cal. Factor) = 55.702 cf Water Collected W_w 12.3 g.

Nozzle Calibration A ___, B ___, C ___, D ___ = Ave. .186 in. D_n. Time of Test 110 min. T_t

Gas Analysis - 0 %CO2 21.0 %O2 0 %CO 79.0 %N2

MT 7.95 mg MT 9.60 mg.

13-10

Plant _____ **PARTICULATE FIELD DATA** Date _____ Run Number 1

LOCATION _____ No. # 17 Page _____ of _____

Port & Trav. Point	Time Clock	Time Stop W.	Dry Gas Meter, cf	P Pitot Dif. in. H_2O	P_m H Meter Pres. in. H_2O Desired	P_m H Meter Pres. in. H_2O Actual	Pump Vacume in. Hg Gauge	T_s Stack Temp. F	Probe Temp. F	Oven Temp. F	Effluent Temp. F Out	Effluent Temp. F In	T_m Dry Gas Temp. F Out	T_m Dry Gas Temp. F In	Stack Static Pres. In. H_2O	oven Pushed Battery 3	oven Pushed Battery 4
10	1057	26	12.99	.36	.40	.40	1.5	75	250	250	50	160	32	32		3	
11	1104	28½	13.87	.36	.40	.40	1.5	76	245	250	50	160	32	32			34
12	1111	5	14.83	.30	.33	.33	1.5	80	245	250	46	190	33	33		13	
13	1118	7½	15.71	.30	.33	.33	1.5	78	245	250	48	170	33	35			44
14	1130	10	16.61	.30	.33	.33	1.5	80	240	250	48	140	34	34		23	
B	1144	12½	17.51	.32	.35	.35	1.5	79	240	250	46	165	36	34		33	
2	1151	15	18.43	.32	.35	.35	1.5	76	240	250	47	135	33	32			64
3	1220	17½	19.37	.36	.40	.40	1.5	76	245	250	47	150	32	32			6
4	1227	20	20.33	.36	.40	.40	1.5	75	240	245	42	141	32	31		53	
5	1240	22½	21.32	.30	.33	.33	1.5	77	240	250	42	160	32	32		63	
		25	222.211														
B																	
1	1301	55	22.[illegible]	.50	.55	.55	1.5	61	260	240	50	130	35	36			16
2	1314	57½	23.98	.50	.55	.55	2.0	75	235	250	49	160	39	39			26
3	1327	1:00	24.21	.60	.66	.66	2.0	77	250	250	50	160	40	40			36
4	1338	1:02½	25.44	.65	.72	.72	2.5	77	250	250	51	160	41	41		5	
5	1348	1:05	26.62	.74	.82	.82	2.5	76	240	250	47	170	42	41		15	
6	1405	1:07½	28.15	.75	.83	.83	2.5	73	230	245	42	165	43	42		25	
7	1416	1:10	29.53	.68	.75	.75	2.5	76	240	250	42	150	45	42		35	
8	1435	1:12½	30.89	.65	.72	.72	2.5	75	250	250	42	130	42	40			56
9	1443	1:15	32.27	.58	.64	.64	2.5	76	250	250	42	165	42	40			66
10	1454	1:17½	33.49	.55	.60	.60	2.0	77	250	255	48	165	42	41			8
11	1500	1:20	34.70	.46	.50	.50	2.0	79	250	255	49	180	43	43		45	
12	1506	1:22½	35.83	.46	.50	.50	2.0	81	250	255	50	170	45	45			18
13	1510	1:25	36.97	.60	.66	.66	2.0	86	250	260	50	210	46	48		55	
14	1515	1:27½	38.23	.68	.76	.76	2.5	85	250	260	51	195	49	49			28
	1520	1:30	39.51	.80	.88	.88	3.0	89	255	260	51	215	48	50		65	
1	1526	1:32½	40.94	.86	.95	.95	3.0	89	245	260	52	200	50	51			38
2	1536	1:35	42.40	.86	.95	.95	3.0	86	250	255	55	175	50	51			48
3	1658	1:37½	43.90	1.0	1.1	1.1	3.0	70	270	230	45	135	41	38			58
Page, Run Totals				20.123		16.54		2180						2216			
Ave.																	

13-11

Plant Geneva | PARTICULATE FIELD DATA | Date [illegible] | Run Number

LOCATION Cincinnati [illegible] | No # 17 | Page | of

Port & Trav. Point	Time Clock	Time Stop W.	Dry Gas Meter, cf	P Pitot Dif. in. H_2O	P_m H Meter Pres. in. H_2O Desired	Actual	Pump Vacume in. Hg Gauge	T_s Stack Temp. F	Probe Temp. F	Oven Temp. F	Effluent Temp. F Out	In	T_m Dry Gas Temp. F Out	In	Stack Static Pres. In. H_2O	Oven Pushed Battery 3 4
17	1:02	140	45.52	1.0	1.1	1.1	3.0	77	260	240	50	150	[illegible]	39		7
20	1:14	1405	47.1[illegible]	.96	1.1	1.1	3.0	77	240	260	52	180	40	39		17
[illegible]	1:25	145	49.71	.90	1.0	1.0	3.0	81	240	260	52	190	[illegible]	39		1
22	1:3[illegible]	1[illegible]	50.21	.80	.88	.88	[illegible]	79	24[illegible]	200	50	145	38	38		27
		1[illegible]	8251.742													

Page, Run Totals ✓ 3.8239 ✓ 4.08 ✓ 314 ✓ 311 ✓

Ave. ✓ 35.1588 ✓ .7991 ✓ 32.28 ✓ .734 ✓ 3432 ✓ 78 ✓ 3174 ✓ 36.1 ✓

13-12

PRELIMINARY VELOCITY TRAVERSE
AND
SAMPLING POINT LOCATION DATA

PLANT USS Geneva Coke Plant LOCATION Pushing Control No. Baghouse

DATE _____ ESTIMATED MOISTURE _____% STACK STATIC PREAS. _____ H_2O

STACK INSIDE DIAMETER 48 in. SAMPLE PORTS 96" DOWNSTREAM DIST.

PORT AND WALL THICKNESS 5 1/4 in. SAMPLE PORTS 24" UPSTREAM DIST.

Sample Point No.	Percent Diameter	Distance From I.D.	Distance From Ref.	Port A ΔP	Port B ΔP	Port C ΔP	Port D ΔP
1	1.1	.53	5.78				
2	3.5	1.68	6.93				
3	6.0	2.88	8.13				
4	8.7	4.18	9.43				
5	11.6	5.57	10.82				
6	14.6	7.01	12.26				
7	18.0	8.64	13.89				
8	21.8	10.46	15.71				
9	26.2	12.58	17.83				
10	31.5	15.12	20.37				
11	39.3	18.86	24.11				
12	60.7	29.14	34.39				
13	68.5	32.88	38.13				
14	73.8	35.42	40.67				
15	78.2	37.54	42.79				
16	82.0	39.36	44.61				
17	85.4	40.99	46.24				
18	88.4	42.43	47.68				
19	91.3	43.82	49.07				
20	94.0	45.12	50.37				
21	96.5	46.32	51.57				
22	98.9	47.47	52.72				
23							
24				13-13			

West Side

Observation Record

Observer DENNIS PHISTER Location 3 BATT. SHED

Time: Start 8:00 AM End 9:00 Date 12-28-82

MIN	SECONDS 0	15	30	45
0	0	0	0	0
1	0	0	0	0
2	0	0	0	0
3	0	0	0	0
4	0	0	0	0
5	0	0	0	0
6	0	0	0	0
7	0	0	0	0
8	0	0	0	0
9	0	0	0	0
10	0	0	0	0
11	0	0	0	0
12	0	0	0	0
13	0	0	0	0
14	0	0	0	0
15	0	0	0	0
16	0	0	0	0
17	0	0	0	0
18	0	0	0	0
19	0	0	0	0

STEAM PLUMES FROM COLLECTOR MAIN.

MIN	SECONDS 0	15	30	45
20	0	0	0	0
21	0	0	0	0
22	0	0	0	0
23	0	0	0	0
24	0	0	0	0
25	0	0	0	0
26	0	0	0	0
27	0	0	0	0
28	0	0	0	0
29	0	0	0	0
30	0	0	0	0
31	0	0	0	0
32	0	0	0	0
33	0	0	0	0
34	0	0	0	0
35	0	0	0	0
36	0	0	0	0
37	0	0	0	0
38	0	0	0	0
39	0	0	0	0

STEAM INTERFERENCE FROM WHARF

STEAM FROM WHARF

VISION BLOCKED BY WHARF STEAM

MIN	SECONDS 0	15	30	45
40	0	0	0	0
41	0	0	0	0
42	0	0	0	0
43	0	0	0	0
44	0	0	0	0
45	0	0	0	—
46	—	—	—	—
47	—	0	0	0
48	0	0	0	0
49	0	0	0	0
50	0	0	0	0
51	0	0	0	0
52	0	0	0	0
53	0	0	0	0
54	0	0	0	0
55	0	0	0	0
56	0	0	0	0
57	0	0	0	0
58	0	—	—	—
59	—	—	—	0

Orientation:

- ○ Source
- ✱ Sun
- → Wind Direction & Speed - SE. < 10
- + Observation Point

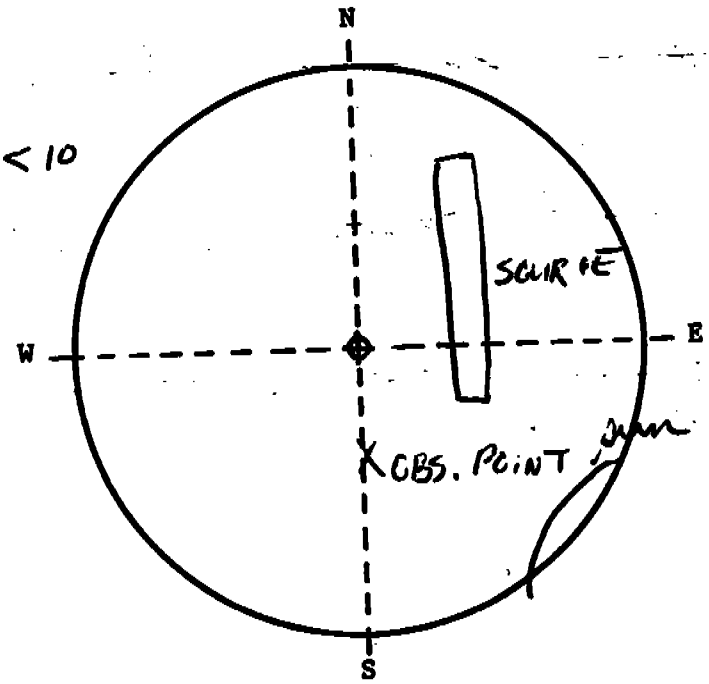

Remarks 8:00 BLUE SKY CLEAR
8:42 - SKY OVERCAST.

13-14

West

Observation Record

Observer DENNIS PULSTER Location 3 BATT C/S SHED

Time: Start 9:00 A.M. End 10:00 Date 12/23/82

MIN	SECONDS 0	15	30	45
0	O	O	O	O
1	O	O	O	O
2	O	O	O	O
3	O	O	O	O
4	O	O	O	O
5	O	O	O	O
6	O	O	O	O
7	O	O	O	O
8	O	O	O	O
9	O	O	O	O
10	O	O	—	O
11	O	O	O	O
12	O	O	O	O
13	O	O	O	O
14	O	O	O	O
15	O	O	O	O
16	O	O	O	O
17	O	O	O	O
18	O	O	—	—
19	—	—	—	—

CHARGING EMISSIONS NORTHEND 3 BATT.

CHARGING EMISSIONS FROM TOP OF BATT

STEAM FROM WHARF

Topside Emissions

VISION BLOCKED BY WHARFSTEAM

MIN	SECONDS 0	15	30	45
20	—	—	O	O
21	O	O	O	O
22	O	O	O	O
23	O	O	O	O
24	O	O	O	O
25	O	O	O	O
26	O	O	O	O
27	O	O	O	O
28	O	O	O	O
29	O	O	O	O
30	O	O	O	O
31	O	—	—	—
32	—	—	O	O
33	O	O	O	O
34	O	O	O	O
35	O	O	O	O
36	—	—	—	—
37	—	—	—	O
38	O	O	O	O
39	O	O	O	O

New observer Newell Kitten

Warfsteam

Warfsteam

MIN	SECONDS 0	15	30	45
40	O	O	O	O
41	O	O	O	O
42	—	—	—	—
43	—	—	—	O
44	O	O	O	O
45	O	O	O	O
46	O	O	O	O
47	O	O	O	—
48	—	—	—	—
49	—	—	—	—
50	—	O	O	O
51	O	O	O	O
52	O	O	O	O
53	O	O	O	O
54	O	O	O	O
55	O	O	O	O
56	O	O	O	O
57	O	O	O	O
58	O	O	O	O
59	O	O	O	O

Warfsteam

Warfsteam

Orientation:

- O Source
- ✱ Sun
- → Wind Direction & Speed SE < 10 mph
- + Observation Point

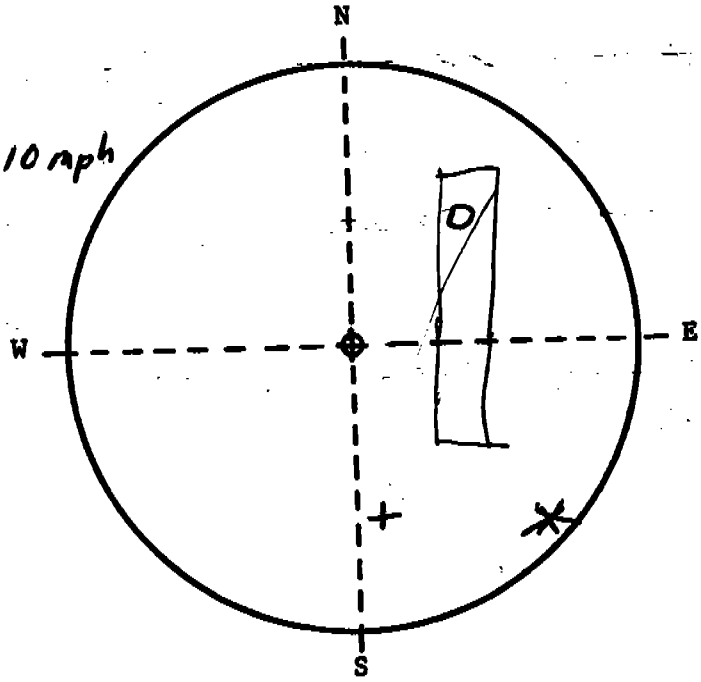

9:14

Remarks SKY PARTLY CLOUDY

West

Observation Record

Observer Newell Kitson

Location 3Batt c/s shed

Time: Start 10:00 End 11:00

Date 28 Dec '82

MIN	SECONDS 0	15	30	45
0	0	0	0	0
1	0	0	0	0
2	0	0	0	0
3	0	0	0	0
4	0	0	0	0
5	0	0	0	0
6	0	0	0	0
7	0	0	0	0
8	0	0	0	0
9	0	0	0	0
10	0	0	0	0
11	0	0	0	0
12	0	0	0	0
13	0	0	0	0
14	0	0	0	0
15	0	0	0	0
16	0	0	0	0
17	0	0	0	0
18	0	0	0	0
19	0	0	0	0

MIN	SECONDS 0	15	30	45
20	0	0	0	0
21	0	0	0	0
22	0	0	0	0
23	0	0	0	0
24	0	0	0	0
25	0	0	0	0
26	0	0	0	0
27	0	0	0	0
28	0	0	0	0
29	0	0	0	0
30	0	0	0	0
31	0	0	0	0
32	0	0	0	0
33	0	0	0	0
34	0	0	0	0
35	0	0	0	0
36	0	0	0	0
37	0	0	0	0
38	0	0	0	0
39	0	0	0	0

MIN	SECONDS 0	15	30	45
40	0	0	0	0
41	0	0	0	0
42	0	0	0	0
43	0	0	0	0
44	0	0	0	0
45	0	0	0	0
46	0	0	0	0
47	0	0	0	0
48	0	0	0	0
49	0	0	0	0
50	0	0	0	0
51	0	0	0	0
52	0	0	0	0
53	0	0	0	0
54	0	0	0	0
55	0	0	0	0
56	0	0	0	0
57	0	0	0	0
58	0	0	0	0
59	0	0	0	0

Orientation:

- Source
- Sun
- Wind Direction & Speed
- Observation Point

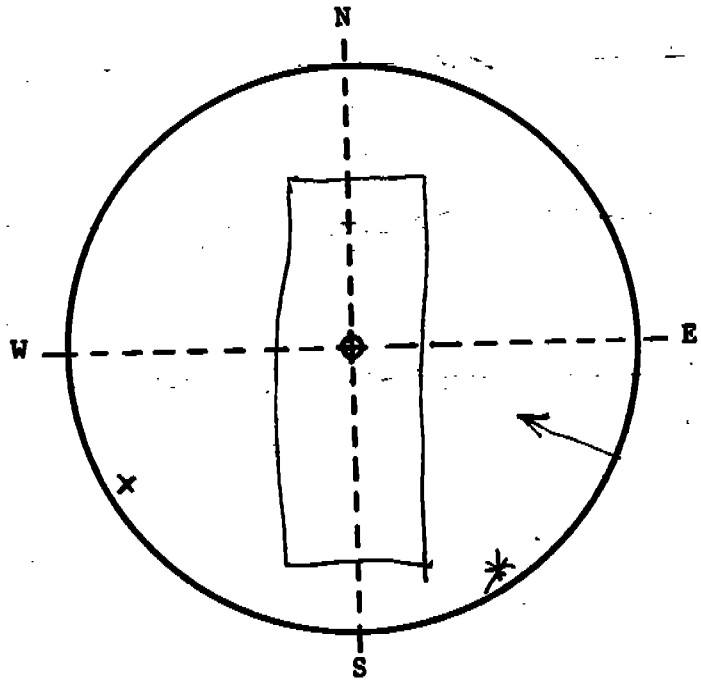

Remarks Wind 0-5mph

mostly clear skies

Observation Record

Observer Newell Kitchen

Location 3 Batt c/s shed West

Time: Start 11:00 End 12:00

Date 28 Dec. 1982

MIN	SECONDS 0	15	30	45
0	0	0	0	0
1	0	0	0	0
2	0	0	0	0
3	0	0	0	0
4	0	0	0	0
5	0	0	0	0
6	0	0	0	0
7	0	0	0	0
8	0	0	0	0
9	0	0	0	0
10	0	0	0	0
11	0	0	0	0
12	0	0	0	0
13	0	0	0	0
14	0	0	0	0
15	0	0	0	0
16	0	0	0	0
17	0	0	0	0
18	0	0	0	0
19	0	0	0	0

MIN	SECONDS 0	15	30	45
20	0	0	0	0
21	0	0	0	0
22	0	0	0	0
23	0	0	0	0
24	0	0	0	0
25	0	0	0	0
26	0	0	0	0
27	0	0	0	0
28	0	0	0	0
29	0	0	0	0
30	0	0	0	0
31	0	0	0	0
32	0	0	0	0
33	0	0	0	0
34	0	0	0	0
35	0	0	0	0
36	0	0	0	0
37	0	0	0	0
38	0	0	0	0
39	0	0	0	0

MIN	SECONDS 0	15	30	45
40	0	0	0	0
41	0	0	0	0
42	0	0	0	0
43	0	0	0	0
44	0	0	0	0
45	0	0	0	0
46	0	0	0	0
47	0	0	0	0
48	0	0	0	0
49	0	0	0	0
50	0	0	0	0
51	0	0	0	0
52	0	0	0	0
53	0	0	0	0
54	0	0	0	0
55	0	0	0	0
56	0	0	0	0
57	0	0	0	0
58	0	0	0	0
59	0	0	0	0

* New observer Robert Olsen

Orientation:

- ⊙ Source
- ✱ Sun
- → Wind Direction & Speed
- + Observation Point

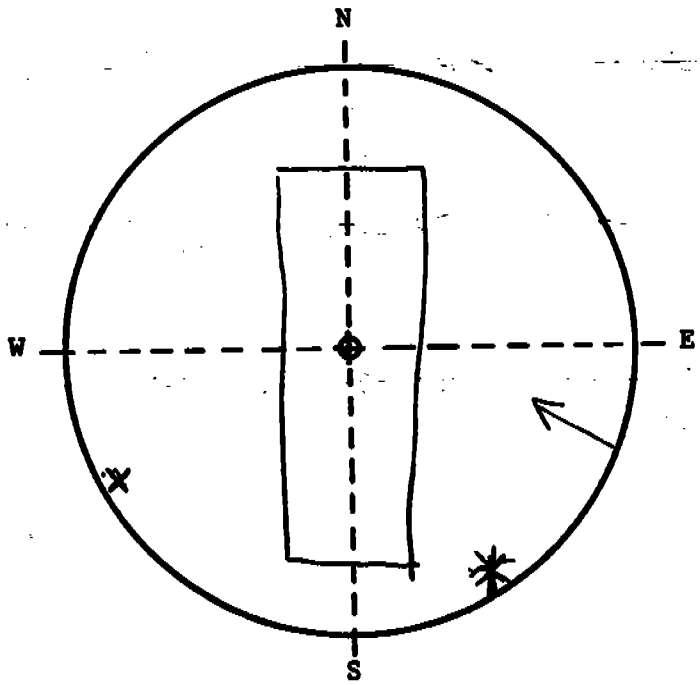

Remarks Wind 0-5 mph

Partly Cloudy Skies

Observation Record

Observer Robert Olsen **Location** 3 Batt S/S Shed - West

Time: Start 12:00 **End** 1:00 PM **Date** 28 Dec 1982

MIN	SECONDS 0	15	30	45	
0	o	o	o	o	
1	o	o	o	o	
2	o	o	o	o	
3	—	—	—	o	steam
4	o	o	o	o	
5	o	o	o	o	
6	o	o	o	o	
7	o	o	o	o	
8	o	o	o	o	
9	o	o	o	o	
10	o	o	o	o	
11	o	o	o	o	
12	o	o	o	o	
13	o	o	o	o	
14	o	o	o	o	
15	o	o	o	o	
16	o	o	o	o	
17	o	o	o	o	read with light wind
18	o	o	o	o	
19		o	o	o	

MIN	SECONDS 0	15	30	45	
20	o	o	o	o	
21	o	o	o	o	
22	o	o	o	o	
23	o	o	o	o	
24	o	o	o	o	
25	o	o	o	o	
26	o	o	o	o	
27	o	o	o	o	
28	o	o	o	o	
29	—	—	—	—	steam
30	—	o	o	o	
31	o	o	o	o	
32	o	o	o	o	
33	o	o	o	o	
34	o	o	o	o	
35	o	o	o	o	
36	—	—	—	—	Steam
37	—	o	o	o	
38	o	o	o	—	
39	o	o	o	o	

MIN	SECONDS 0	15	30	45	
40	o	o	o	o	
41	o	o	o	o	
42	o	o	o	o	
43	o	o	o	o	
44	o	o	o	o	
45	o	o	o	o	
46	—	—	—	—	Steam
47	o	o	o	o	
48	o	o	o	o	
49	o	o	o	o	
50	o	o	o	o	
51	o	o	o	o	
52	o	o	o	o	
53	o	o	o	o	
54	o	o	o	o	
55	o	o	o	o	
56	o	o	o	o	
57	o	o	o	o	
58	o	o	o	o	
59	o	o	o	o	

Orientation:

- o Source
- ✱ Sun
- → Wind Direction & Speed
- + Observation Point

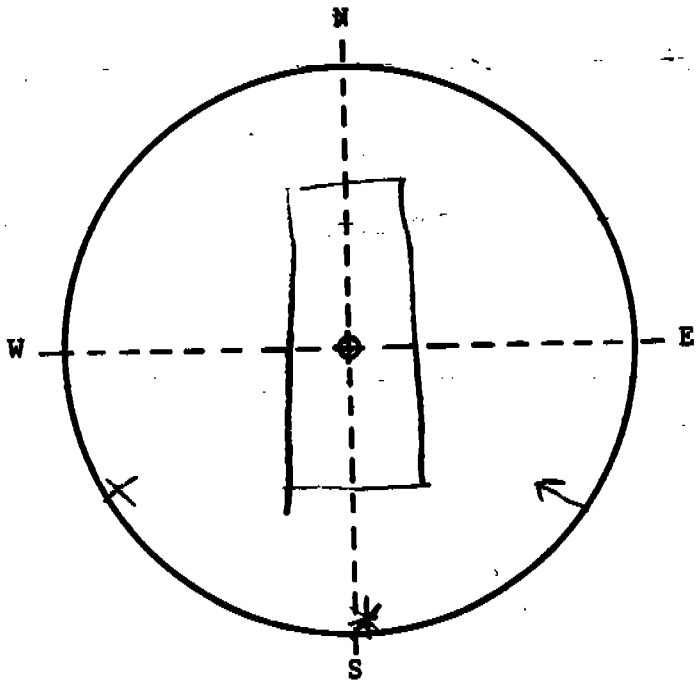

Remarks Wind 0-5 mph
Partly Cloudy Skies
than light snow

Observation Record

Observer Robert Olson

Location 3 Bat c/s shed West

Time: Start 1:20 End 2:20 PM

Date 28 Dec 1982

MIN	SECONDS 0	15	30	45
0	0	0	0	0
1	0	0	0	0
2	0	0	0	0
3	0	0	0	0
4	0	0	0	0
5	0	0	0	0
6	—	—	—	—
7	0	0	0	0
8	0	0	0	0
9	0	0	0	0
10	0	0	0	0
11	0	0	0	0
12	0	0	0	0
13	0	0	0	0
14	0	0	0	0
15	0	0	0	0
16	0	0	0	0
17	0	0	0	0
18	0	0	0	0
19	0	0	0	0

Steam

MIN	SECONDS 0	15	30	45
20	0	0	0	0
21	0	0	0	0
22	0	0	0	0
23	0	0	0	0
24	0	0	0	0
25	0	0	0	0
26	0	0	0	0
27	0	0	0	0
28	0	0	0	0
29	0	0	0	0
30	0	0	0	0
31	0	0	0	0
32	0	0	0	0
33	0	0	0	0
34	0	0	0	0
35	0	0	0	0
36	0	0	0	0
37	0	0	0	0
38	0	0	0	0
39	0	0	0	0

med snow

MIN	SECONDS 0	15	30	45
40	0	0	0	0
41	0	0	0	0
42	0	0	0	0
43	0	0	0	0
44	0	0	0	0
45	0	0	0	0
46	0	0	0	0
47	0	0	0	0
48	0	0	0	0
49	0	0	0	0
50	0	0	0	0
51	0	0	0	0
52	0	0	0	0
53	0	0	0	0
54	0	0	0	0
55	—	—	—	—
56	0	0	0	0
57	0	0	0	0
58	0	0	0	0
59	0	0	0	0

Light snow

Steam

Orientation:

- Source
- Sun
- Wind Direction & Speed
- Observation Point

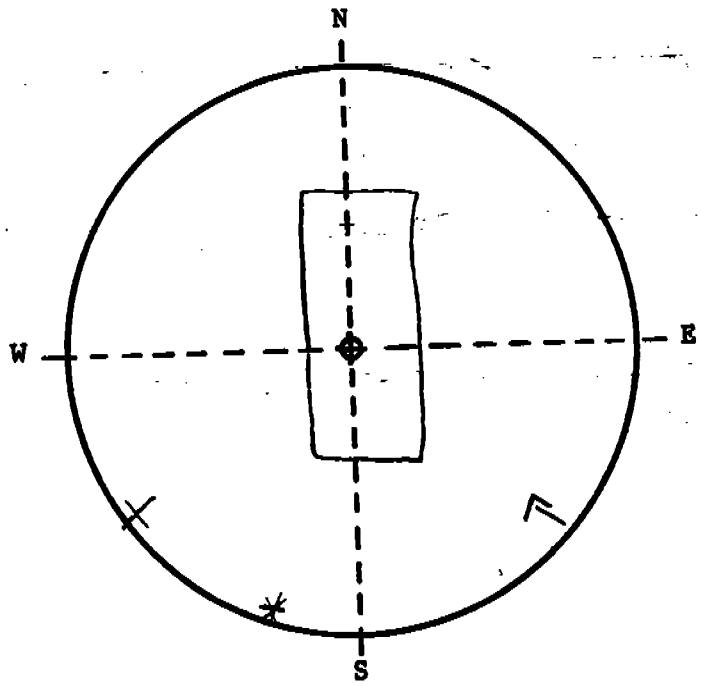

Remarks Wind 0-5

light snow - med. snow

Observation Record

Observer Newell Kitchen

Location #3 Coke Battery Stack, - West

Time: Start 14:00 End 15:00

Date 28 Dec. 1982

MIN	SECONDS 0	15	30	45
0	0	0	0	0
1	0	0	0	0
2	0	0	0	0
3	0	0	0	0
4	0	0	0	0
5	0	0	0	0
6	0	0	0	0
7	0	0	0	0
8	0	0	0	0
9	0	0	0	0
10	0	0	0	0
11	0	0	0	0
12	0	0	0	0
13	0	0	0	0
14	0	0	0	0
15	0	0	0	0
16	0	0	0	0
17	0	0	0	0
18	0	0	0	0
19	0	0	0	0

Steam escaping out of wrong area

MIN	SECONDS 0	15	30	45
20	0	0	0	0
21	0	0	0	0
22	0	0	0	0
23	0	0	0	0
24	0	0	0	0
25	0	0	0	0
26	0	0	0	0
27	0	0	0	0
28	0	0	0	0
29	0	0	0	0
30	0	0	0	0
31	0	0	0	0
32	0	0	0	0
33	0	0	0	0
34	0	0	0	0
35	0	0	0	0
36	0	0	0	0
37	0	0	0	0
38	0	0	0	0
39	0	0	0	0

MIN	SECONDS 0	15	30	45
40	0	0	0	0
41	0	0	0	0
42	0	0	0	0
43	0	0	0	0
44	0	0	0	0
45	0	0	0	0
46	0	0	0	0
47	0	0	0	0
48	—	—	—	—
49	—	—	—	0
50	0	0	0	0
51	0	0	0	0
52	0	0	0	0
53	0	0	0	0
54	0	0	0	0
55	0	0	0	0
56	0	0	0	0
57	0	0	0	0
58	0	0	0	0
59	0	0	0	0

escaped steam blocked view

Orientation:

- ⊙ Source
- ✱ Sun
- → Wind Direction & Speed
- + Observation Point

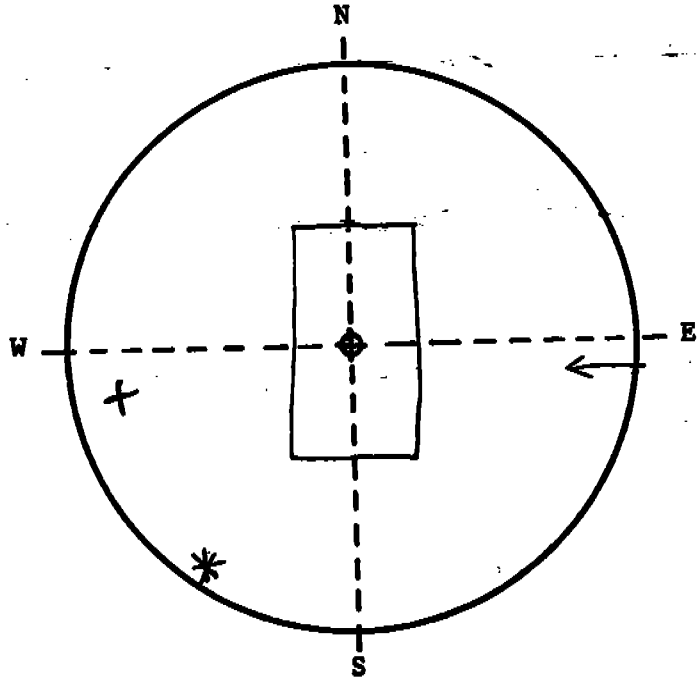

Remarks Wind 0-5mph
Partly Cloudy Skies

Observation Record

Observer Newell Kitchen

Location* 3 Shed-Coke Plant - west

Time: Start 15:00 End 16:00

Date 28 Dec. '82

MIN	SECONDS 0	15	30	45
0	0	0	0	0
1	0	0	0	0
2	0	0	0	0
3	0	0	0	0
4	0	0	0	0
5	0	0	0	0
6	0	0	0	0
7	0	0	0	0
8	0	0	0	0
9	0	0	0	0
10	0	0	0	0
11	0	0	0	0
12	0	0	0	0
13	0	0	0	0
14	0	0	0	0
15	0	0	0	0
16	0	0	0	0
17	0	0	0	0
18	0	0	0	0
19	0	0	0	0

MIN	SECONDS 0	15	30	45
20	0	0	0	0
21	0	0	0	0
22	0	0	0	0
23	0	0	0	0
24	0	0	0	0
25	0	0	0	0
26	0	0	0	0
27	0	0	0	0
28	0	0	0	0
29	0	0	—	—
30	0	0	0	0
31	0	0	0	0
32	0	0	0	0
33	0	0	0	0
34	0	0	0	0
35	0	0	0	0
36	0	0	0	0
37	0	0	0	0
38	0	0	0	0
39	0	0	0	0

steam block

MIN	SECONDS 0	15	30	45
40	0	0	0	0
41	0	0	0	0
42	0	0	0	0
43	0	0	0	0
44	0	0	0	0
45	0	0	0	0
46	0	0	0	0
47	0	0	0	0
48	0	0	0	0
49	0	0	0	0
50	0	0	0	0
51	0	0	0	0
52	0	0	0	0
53	0	0	0	0
54	0	0	0	0
55	0	0	0	0
56	0	0	0	0
57	0	0	0	0
58	0	0	0	0
59	0	0	0	0

Orientation:

- ⊙ Source
- ✱ Sun
- → Wind Direction & Speed
- + Observation Point

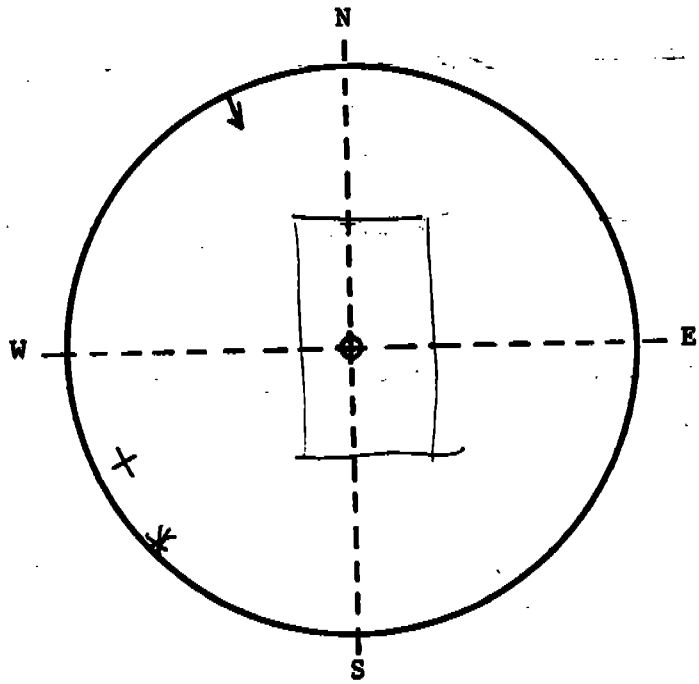

Remarks Wind 0-5 mph

Clear skies

Observation Record

Observer Newell Kitchen

Location #3 Battery Shed - Coke Oven - West Side

Time: Start 16:00 End 17:00

Date 28 Dec. 1982

MIN	SECONDS 0	15	30	45
0	0	0	0	0
1	0	0	0	0
2	0	0	0	0
3	0	0	0	0
4	0	0	0	0
5	0	0	0	0
6	0	0	0	0
7	0	0	0	0
8	0	0	0	0
9	0	0	0	0
10	0	0	0	0
11	0	0	0	0
12	0	0	0	0
13	0	0	0	0
14	0	0	0	0
15	0	0	0	0
16	0	0	0	0
17	0	0	0	0
18	0	0	0	0
19	0	0	0	0

MIN	SECONDS 0	15	30	45
20	0	0	0	0
21	0	0	0	0
22	0	0	0	0
23	0	0	0	0
24	0	0	0	0
25	0	0	0	0
26	0	0	0	0
27	0	0	0	0
28	0	0	0	0
29	0	0	0	0
30	0	0	0	0
31	0	0	0	0
32	0	0	0	0
33	0	0	0	0
34	0	0	0	0
35	0	0	0	0
36	0	0	0	0
37	0	0	0	0
38	0	0	0	0
39	0	0	0	0

MIN	SECONDS 0	15	30	45
40	0	0	0	0
41	0	0	0	0
42	0	0	0	0
43	0	0	0	0
44	0	0	0	0
45	0	0	0	0
46	0	0	0	0
47	0	0	0	0
48	0	0	0	0
49	0	0	0	0
50				
51				
52				
53				
54				
55				
56				
57				
58				
59				

*test stoped

Orientation:

- ⊙ Source
- ✱ Sun
- → Wind Direction & Speed
- + Observation Point

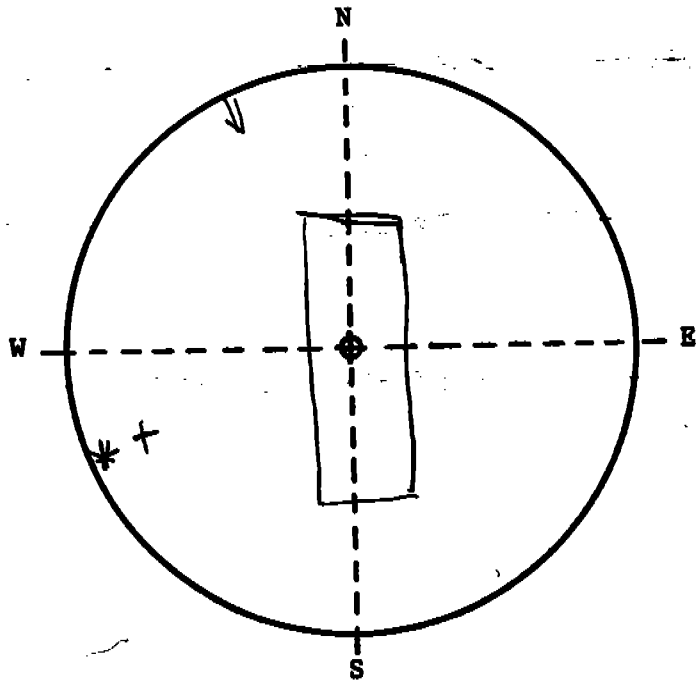

Remarks 0-5 mph wind

Clear Skies

Observation Record

Observer NORMAN JOHNSON

Location Coke Shed #3 Butt EAST

Time: Start 8:15AM End 9:15AM

Date Dec. 28, 1982

MIN	SECONDS 0	15	30	45
0	0	0	0	0
1	0	0	0	0
2	0	0	0	0
3	0	0	0	0
4	0	0	0	0
5	0	0	0	0
6	0	0	0	0
7	0	0	0	0
8	0	0	0	0
9	0	0	0	0
10	0	0	0	0
11	0	0	0	0
12	0	0	0	0
13	0	0	0	0
14	0	0	0	0
15	0	0	0	0
16	0	0	0	0
17	0	0	0	0
18	0	0	0	0
19	0	0	0	0

MIN	SECONDS 0	15	30	45
20	0	0	0	0
21	0	0	0	0
22	0	0	0	0
23	0	0	0	0
24	0	0	0	0
25	0	0	0	0
26	0	0	0	0
27	0	0	0	0
28	0	0	0	0
29	0	0	0	0
30	0	0	0	0
31	0	0	0	0
32	0	0	0	0
33	0	0	0	0
34	0	0	0	0
35	0	0	0	0
36	0	0	0	0
37	0	0	0	0
38	0	0	0	0
39	0	0	0	0

MIN	SECONDS 0	15	30	45	
40	0	0	0	0	
41	0	0	0	0	
42	0	0	0	0	
43	0	0	0	0	
44	0	0	0	0	
45	0	0	0	0	
46	0	0	0	0	
47	0	0	0	0	
48	0	0	0	0	
49	5	5	5	10	Near North
50	5	5	5	5	Crossover
51	0	0	0	0	
52	0	0	0	0	
53	0	0	0	0	
54	0	0	0	0	
55	0	0	0	0	
56	0	0	0	0	
57	0	0	0	0	
58	0	0	0	0	
59	0	0	0	0	

Orientation:

- Source
- Sun
- Wind Direction & Speed
- Observation Point

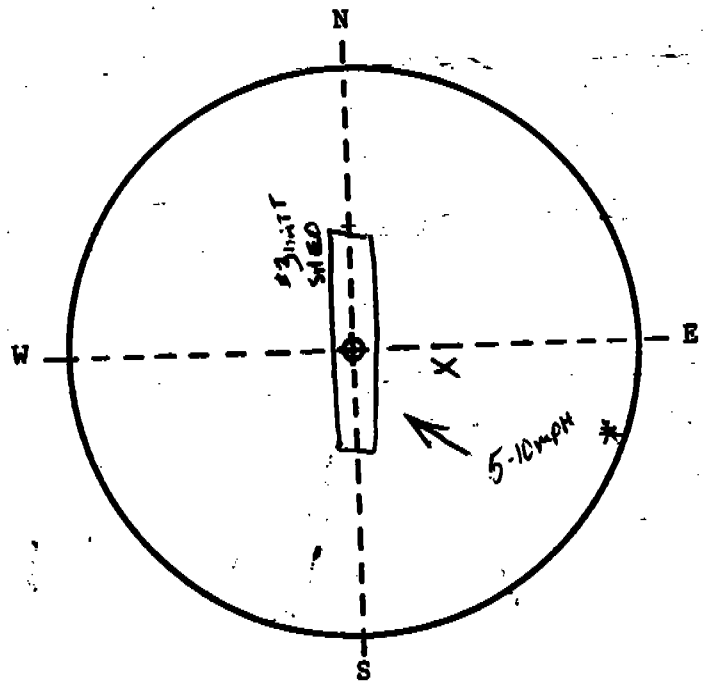

Remarks BLUE SKY
SCATTERED CLOUDS

Observation Record

Observer Norman Johnson

Location Coke Plant #3 Batt Shed EAST

Time: Start 9:15Am End 10:15Am

Date Dec. 28, 1982

MIN	SECONDS 0	15	30	45
0	0	0	0	0
1	0	0	0	0
2	0	0	0	0
3	0	0	0	0
4	0	0	0	0
5	0	0	0	0
6	0	0	0	0
7	0	0	0	0
8	0	0	0	0
9	0	0	0	0
10	0	0	0	0
11	0	0	0	0
12	0	0	0	0
13	0	0	0	0
14	0	0	0	0
15	0	0	0	0
16	0	0	0	0
17	0	0	0	0
18	0	0	0	0
19	0	0	0	0

MIN	SECONDS 0	15	30	45
20	0	0	0	0
21	0	0	0	0
22	0	0	0	0
23	0	0	0	0
24	0	0	0	0
25	0	0	0	0
26	0	0	0	0
27	0	0	0	0
28	0	0	0	0
29	0	0	0	0
30	0	0	0	0
31	0	0	0	0
32	0	0	0	0
33	0	0	0	0
34	0	0	0	0
35	0	0	0	0
36	0	0	0	0
37	0	0	0	0
38	0	0	0	0
39	0	0	0	0

MIN	SECONDS 0	15	30	45	
40	0	0	0	0	← D.P RELIEF
41	0	0	0	0	
42	0	0	0	0	← OFFTAKE P/S EMISSION
43	0	0	0	0	
44	0	0	0	0	
45	0	0	0	0	
46	0	5	5	0	← PUSED #31
47	0	0	0	0	
48	0	0	0	0	
49	0	0	0	0	EMISSIONS FROM DOOR REMOVAL
50	0	0	0	0	
51	0	0	0	0	
52	0	0	0	0	
53	0	0	0	0	
54	0	0	0	0	
55	0	0	0	0	
56	0	0	0	0	← CHARGING EMISSIONS
57	0	0	0	0	
58	0	0	0	0	
59	0	0	0	0	

Orientation:

- o Source
- ✱ Sun
- → Wind Direction & Speed
- + Observation Point

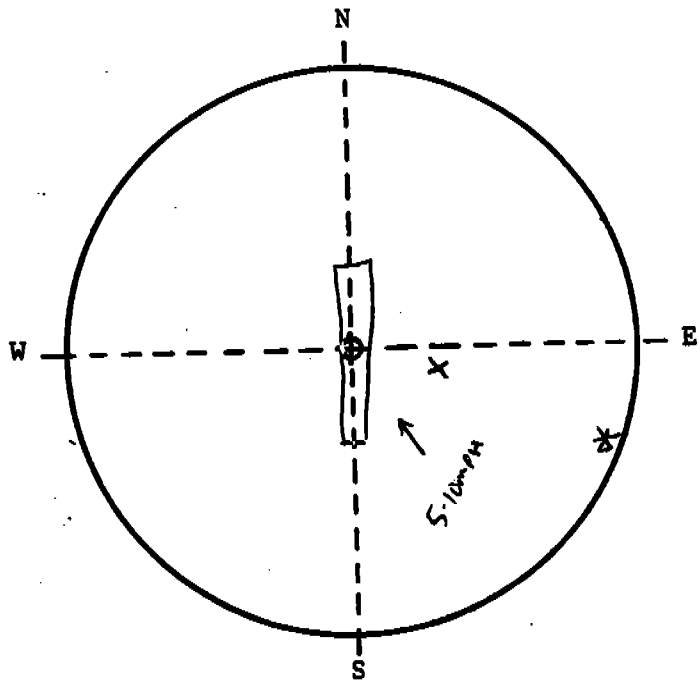

Remarks Blue Sky - few Clouds.

Started sandwing about 9:30 - 9:35

Observation Record

Observer DENNIS PHISTER

Location TOPSIDE BATT. 3 EAST

Time: Start 10:15 A.M. End _____

Date 12-28-82

MIN	SECONDS 0	15	30	45
0	0	0	0	0
1	0	0	0	0
2	0	0	0	0
3	0	0	0	0
4	0	0	0	0
5	0	0	0	0
6	0	0	0	0
7	0	0	0	0
8	0	0	0	0
9	0	0	0	0
10	0	0	0	0
11	0	0	0	0
12	0	0	0	0
13	0	0	0	0
14	0	0	0	0
15	0	0	0	0
16	0	0	0	0
17	0	0	0	0
18	0	0	0	0
19	0	0	0	0

WHARF STEAM NORTH END

MIN	SECONDS 0	15	30	45
20	0	0	0	5
21	0	0	0	0
22	0	0	0	0
23	0	0	0	0
24	0	0	0	0
25	0	0	0	0
26	0	5	10	0
27	0	0	0	0
28	0	0	0	0
29	0	0	0	0
30	0	0	0	0
31	0	0	0	0
32	0	0	0	0
33	0	0	0	0
34	0	0	0	0
35	0	0	0	0
36	0	0	0	0
37	0	0	0	0
38	0	0	0	0
39	0	0	0	0

c/s 45-47 AREA.

c/s 55-56

MIN	SECONDS 0	15	30	45
40	0	0	0	0
41	0	0	0	0
42	0	0	0	0
43	0	0	0	0
44	0	0	0	0
45	0	0	0	0
46	0	0	0	0
47	0	0	0	0
48	0	0	0	0
49	0	0	0	0
50	0	0	0	0
51	0	0	0	0
52	0	0	0	0
53	0	0	0	0
54	5	0	0	0
55	0	0	0	0
56	0	0	0	0
57	0	0	0	0
58	0	0	0	0
59	0	0	0	0

c/s 44-45

Orientation:

- Source
- Sun
- Wind Direction & Speed SE < 10 MPH
- Observation Point

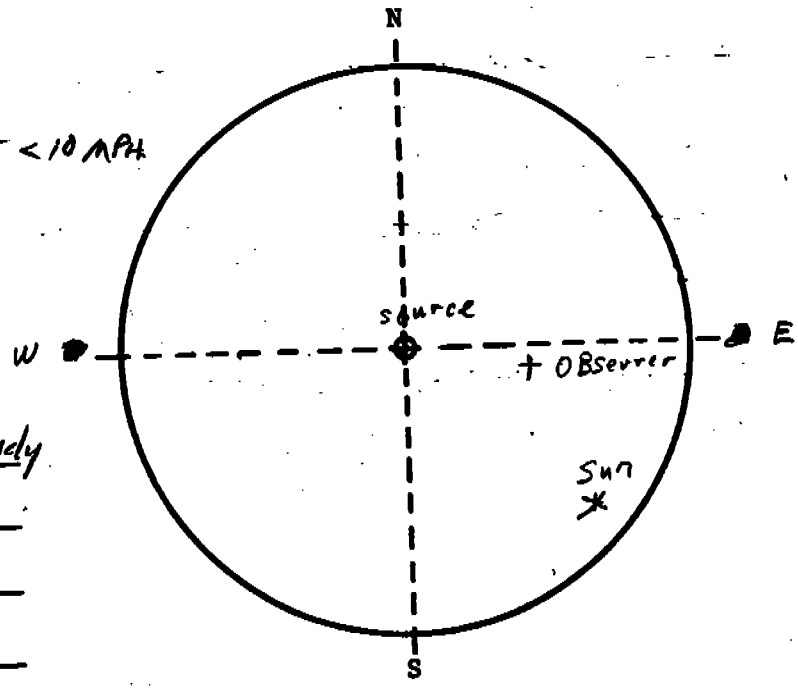

Remarks 10:25 A.M. Sky - partly cloudy

11:12 - A.M. sky clearing

Observation Record

Observer DENNIS PHISTER

Location TOPSIDE 3 BATT. SHED EAST

Time: Start 11:15 A.M. End _____

Date 12-28-82

MIN	SECONDS 0	15	30	45
0	0	0	0	0
1	0	0	0	0
2	0	0	0	0
3	0	0	0	0
4	0	0	0	0
5	0	0	0	0
6	0	0	0	0
7	0	0	0	0
8	0	0	0	0
9	0	0	0	0
10	0	0	0	0
11	0	0	0	0
12	0	0	0	0
13	0	0	0	0
14	0	0	0	0
15	5	10	5	0
16	0	0	0	0
17	0	0	0	0
18	0	0	0	0
19	0	0	0	0

C/S BETWEEN 16-15 DOORS. JUST PUSHED #13

MIN	SECONDS 0	15	30	45
20	0	0	0	0
21	0	0	0	0
22	0	0	0	0
23	0	0	0	0
24	0	0	0	0
25	0	0	0	0
26	0	0	0	0
27	0	0	0	0
28	0	0	0	0
29	0	0	0	0
30	0	0	0	0
31	0	0	0	0
32	0	0	0	0
33	0	0	0	0
34	0	0	0	0
35	0	0	0	0
36	0	0	0	0
37	0	0	0	0
38	0	0	5	0
39	0	0	0	0

PUSHED #37

MIN	SECONDS 0	15	30	45
40	0	0	0	0
41	0	0	0	0
42	0	0	0	0
43	0	0	0	0
44	0	0	0	0
45	0	0	0	0
46	0	0	0	0
47	0	0	0	0
48	0	0	0	0
49	0	0	0	0
50	0	0	0	0
51	0	0	0	0
52	0	0	0	0
53	0	0	0	0
54	0	0	0	0
55	0	0	0	0
56	0	0	0	0
57	0	0	0	0
58	0	0	0	0
59	0	0	0	0

P/S OF FUGIVE EMISSIONS

CHARGING EMISSIONS

KEITH RELIEVED

Orientation:

- ○ Source
- ✱ Sun
- → Wind Direction & Speed - <5 mph SE
- + Observation Point

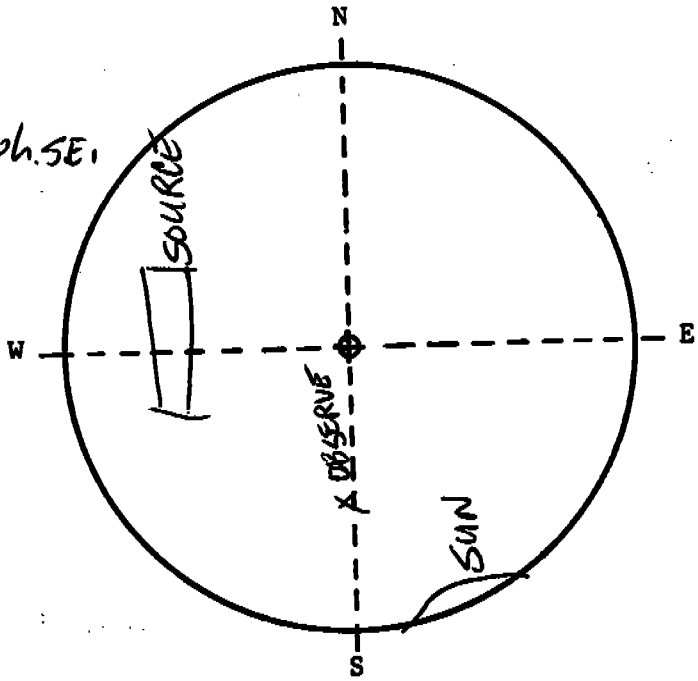

Remarks 11:30 A.M. sky. partly cloudy.
12:10 P.M. snow (Light)

Observation Record

Observer _____ Location _____ EAST

Time: Start 12 5 End _____ Date DEC. 28 [illegible]

MIN	SECONDS 0	15	30	45
0				
1				
2				
3				
4				
5				
6				
7				
8				
9				
10				
11				
12				
13				
14				
15				
16				
17				
18				
19				

MIN	SECONDS 0	15	30	45
20				
21				
22				
23				
24				
25				
26				
27				
28				
29				
30				
31				
32				
33				
34				
35				
36				
37				
38				
39				

MIN	SECONDS 0	15	30	45
40				
41				
42				
43				
44				
45				
46				
47				
48				
49				
50				
51				
52				
53				
54				
55				
56				
57				
58				
59				

Orientation:

- Source
- Sun
- Wind Direction & Speed
- Observation Point

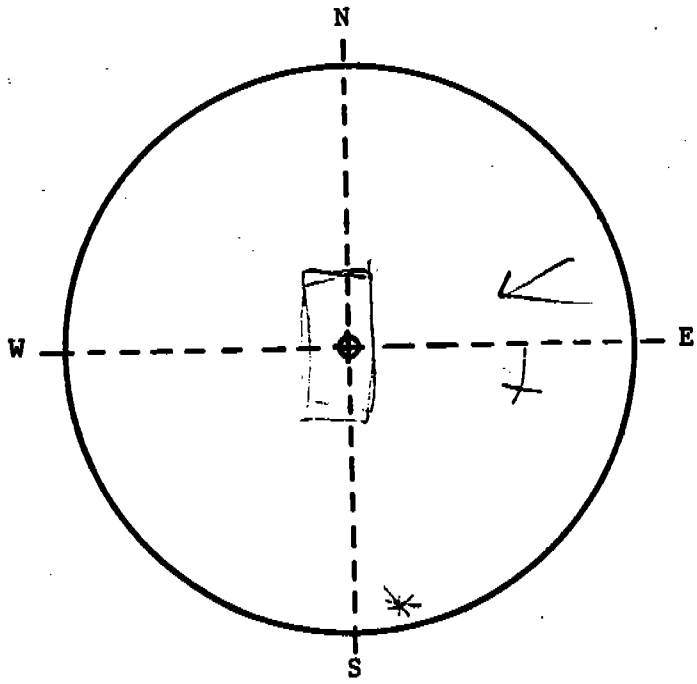

Remarks _____

13-27

Observation Record

Observer [illegible]

Location [illegible] EAST

Time: Start [illegible] End [illegible]

Date [illegible]

MIN	SECONDS 0	15	30	45
0				
1				
2				
3				
4				
5				
6				
7				
8				
9				
10				
11				
12				
13				
14				
15				
16				
17				
18				
19				

MIN	SECONDS 0	15	30	45
20				
21				
22				
23				
24				
25				
26				
27				
28				
29				
30				
31				
32				
33				
34				
35				
36				
37				
38				
39				

MIN	SECONDS 0	15	30	45
40				
41				
42				
43				
44				
45				
46				
47				
48				
49				
50				
51				
52				
53				
54				
55				
56				
57				
58				
59				

Orientation:

- Source
- Sun
- Wind Direction & Speed
- Observation Point

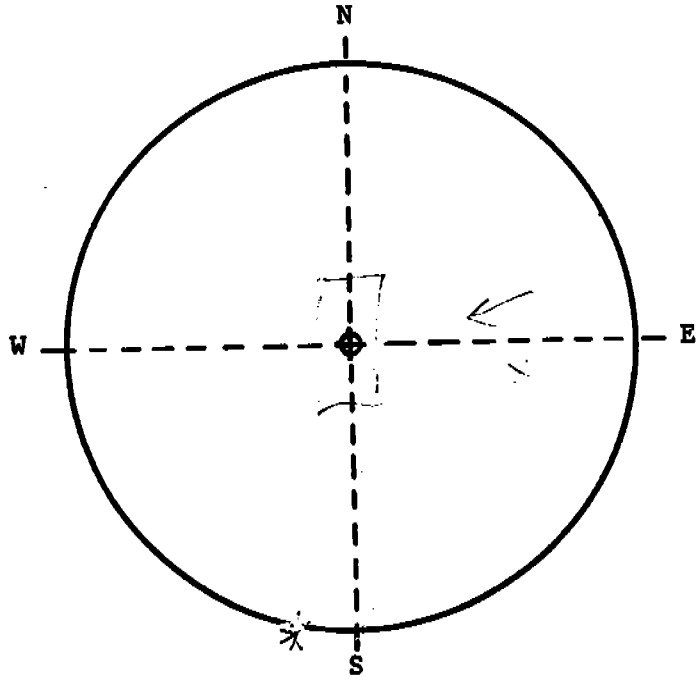

Remarks [illegible]

[illegible]

Observation Record

Observer [illegible] B. Smith

Location Coke Dead [illegible] EAST

Time: Start [illegible] End [illegible]

Date [illegible]

MIN	SECONDS 0	15	30	45
0	0	0	0	0
1	0	0	0	0
2	0	0	0	0
3	0	0	0	0
4	0	0	0	0
5	0	0	0	0
6	0	0	0	0
7	0	0	0	0
8	0	0	0	0
9	0	0	0	0
10	0	0	0	0
11	0	0	0	0
12	0	0	0	0
13	0	0	0	0
14	0	0	0	0
15	0	0	0	0
16	0	0	0	0
17	0	0	0	0
18	0	0	0	0
19	0	0	0	0

MIN	SECONDS 0	15	30	45
20	0	0	0	0
21	0	0	0	0
22	0	0	0	0
23	0	0	0	0
24	0	0	0	0
25	0	0	0	0
26	0	0	0	0
27	0	0	0	0
28	0	0	0	0
29	0	0	0	0
30	0	0	0	0
31	0	0	0	0
32	0	0	0	0
33	0	0	0	0
34	0	0		0
35				
36	0	0	0	0
37	0	0	0	0
38	0	0	0	0
39	0	0	0	0

MIN	SECONDS 0	15	30	45
40	0	0	0	0
41	0	0	0	0
42	0	0	0	0
43	0	0	0	0
44	0	0	0	0
45			0	0
46	0	0	0	0
47		0		0
48		0	0	0
49	0		0	0
50	0	0	0	0
51	0	0	0	0
52	0	0	0	0
53	0	0	0	0
54	0	0	0	0
55	0	0	0	0
56	0	0	0	0
57	0	0	0	0
58	0	0	0	0
59	0	0	0	0

Orientation:

- Source
- Sun
- Wind Direction & Speed
- Observation Point

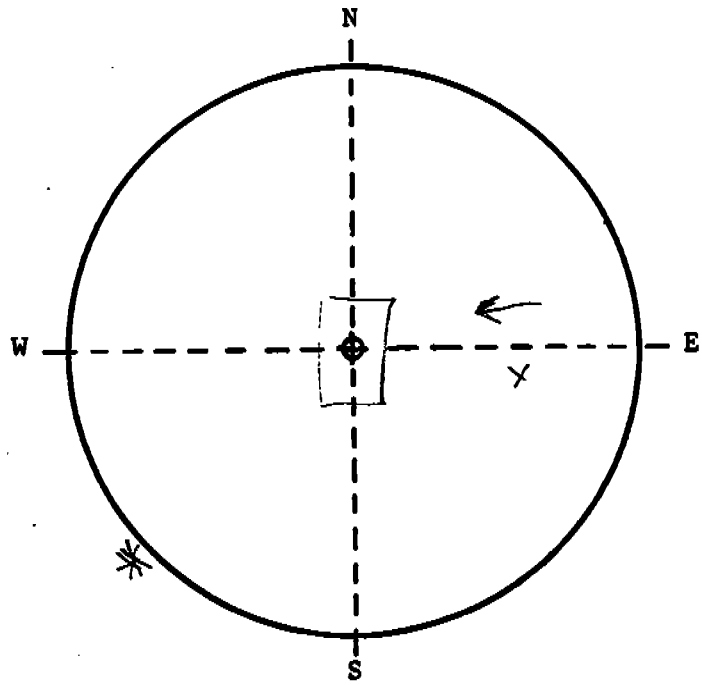

Remarks WIND 0-3

[illegible] - Some [illegible]

Observation Record

Observer KEITH B. SMITH **Location** COKE SHED ROTARY #3 EAST

Time: Start 3:15 PM **End** 4:15 PM **Date** DEC. 28, 1952

MIN	SECONDS 0	15	30	45
0	0	0	0	0
1	0	0	0	0
2	0	0	0	0
3	0	0	0	0
4	0	0	0	0
5	0	0	0	0
6	0	0	0	0
7	0	0	0	0
8	0	0	0	0
9	0	0	0	0
10	0	0	0	0
11	0	0	0	0
12	0	0	0	0
13	0	0	0	0
14	0	0	0	0
15	0	0	0	0
16	0	0	0	0
17	0	0	0	0
18	0	0	0	0
19	0	0	0	0

MIN	SECONDS 0	15	30	45
20	0	0	0	0
21	0	0	0	0
22	0	0	0	0
23	0	0	0	0
24	0	0	0	0
25	0	0	0	0
26	0	0	0	0
27	0	0	0	0
28	0	0	0	0
29	0	0	0	0
30	0	0	0	0
31	0	0	0	0
32	0	0	0	0
33	0	0	0	0
34	0	0	0	0
35	0	0	0	0
36	0	0	0	0
37	0	0	0	0
38	0	0	0	0
39	0	0	0	0

MIN	SECONDS 0	15	30	45
40	0	0	0	0
41	0	0	0	0
42	0	0	0	0
43	0	0	0	0
44	0	0	0	0
45	0	0	0	0
46	0	0	0	0
47	0	0	0	0
48	0	0	0	0
49	0	0	0	0
50	0	0	0	0
51	0	0	0	0
52	0	0	0	0
53	0	0	0	0
54	0	0	0	0
55	0	0	0	0
56	0	0	0	0
57	0	0	0	0
58	0	0	0	0
59	0	0	0	0

Orientation:

- ⊖ Source
- ✱ Sun
- → Wind Direction & Speed
- + Observation Point

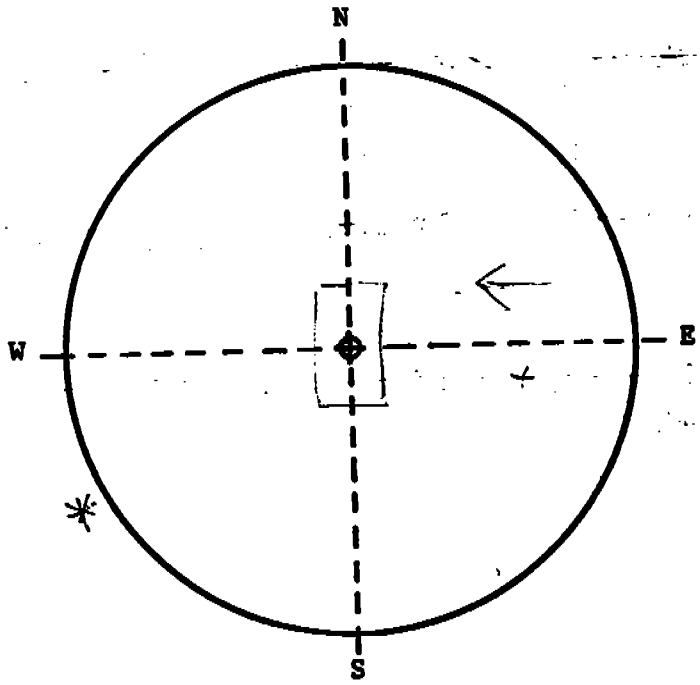

Remarks WIND 0-3
CLEAR SKY

Observation Record

Observer [illegible] Smith

Location [illegible] EAST

Time: Start [illegible] End 11:50

Date [illegible]

MIN	SECONDS 0	15	30	45
0				
1				
2				
3				
4				
5				
6				
7				
8				
9				
10				
11				
12				
13				
14				
15				
16				
17				
18				
19				

MIN	SECONDS 0	15	30	45
20				
21				
22				
23				
24				
25				
26				
27				
28				
29				
30				
31				
32				
33				
34				
35				
36				
37				
38				
39				

#7

MIN	SECONDS 0	15	30	45
40				
41				
42				
43				
44				
45				
46				
47				
48				
49				
50				
51				
52				
53				
54				
55				
56				
57				
58				
59				

Orientation:

- ⊙ Source
- ✱ Sun
- → Wind Direction & Speed
- + Observation Point

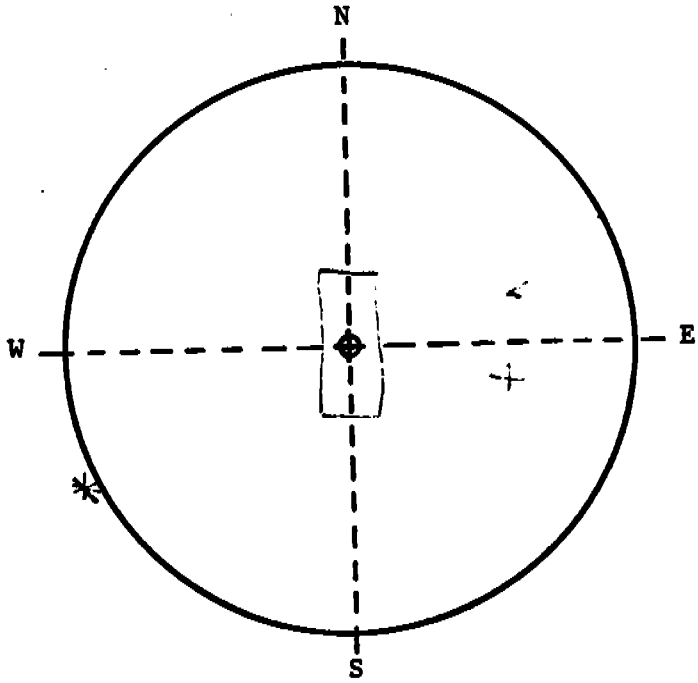

Remarks [illegible]

West Side

Observation Record

Observer Newell Kitchen

Location #4 Battery shed Coke Oven - USS Geneva

Time: Start 08:00 End 09:00

Date 28 Dec. 1982

MIN	SECONDS 0	15	30	45
0	0	0	0	0
1	0	0	0	0
2	0	0	0	0
3	0	0	0	0
4	0	0	0	0
5	0	0	0	0
6	0	0	0	0
7	0	0	0	0
8	0	0	0	0
9	0	0	0	0
10	0	0	0	0
11	0	0	0	0
12	0	0	0	0
13	0	0	0	0
14	0	0	0	0
15	0	0	0	0
16	0	0	0	0
17	0	0	0	0
18	0	0	0	0
19	0	0	0	0

MIN	SECONDS 0	15	30	45
20	0	0	0	0
21	0	0	0	0
22	0	0	0	0
23	0	0	0	0
24	0	0	0	0
25	0	0	0	0
26	0	0	0	0
27	0	0	0	0
28	0	0	0	0
29	0	0	0	0
30	0	0	0	0
31	0	0	0	0
32	0	0	0	0
33	0	0	0	0
34	0	0	0	0
35	0	0	0	0
36	0	0	0	0
37	0	0	0	0
38	0	0	0	0
39	0	0	0	0

MIN	SECONDS 0	15	30	45
40	0	0	0	0
41	0	0	0	0
42	0	0	0	5*
43	5	5	5	0
44	0	0	0	0
45	0	0	0	0
46	0	0	0	0
47	0	0	0	0
48	0	0	0	0
49	0	0	0	0
50	0	0	0	0
51	0	0	0	0
52	0	0	0	0
53	0	0	0	0
54	0	0	0	0
55	0	0	0	0
56	0	0	0	0
57	0	0	0	0
58	0	0	0	0
59	0	0	0	0

*North end near the top of the shed

Orientation:

- Source
- Sun
- Wind Direction & Speed
- Observation Point

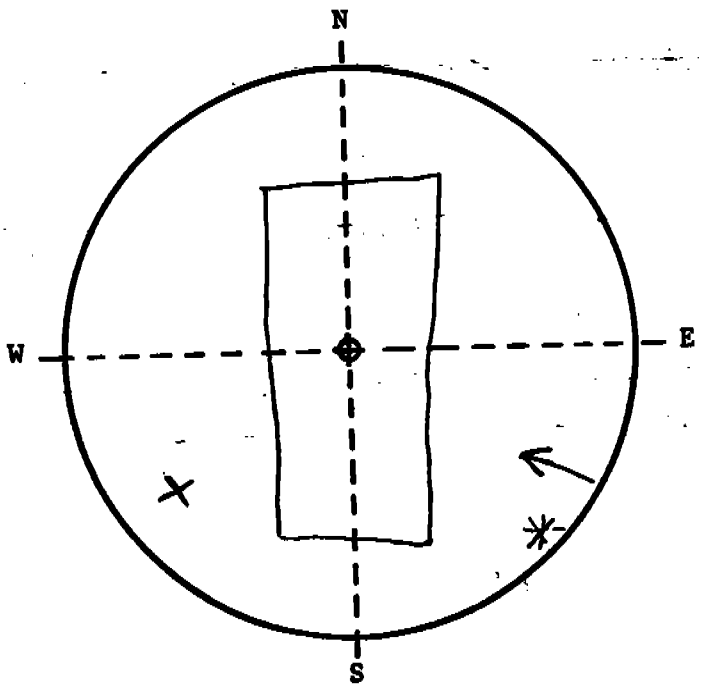

Remarks Clear Skies

Wind - 0-5mph

Observation Record

Observer Newell Kitchen **Location** 4th Battery Shed — West

Time: Start 09:00 **End** 10:00 **Date** 28 Dec. 1987

MIN	SECONDS 0	15	30	45
0	0	0	0	0
1	0	0	0	0
2	0	0	0	0
3	0	0	0	0
4	0	0	0	0
5	0	0	0	0
6	0	0	0	0
7	0	0	0	0
8	0	0	0	0
9	0	0	0	0
10	0	0	0	0
11	0	0	0	0
12	0	0	0	0
13	0	0	0	0
14	0	0	0	0
15	0	0	0	0
16	0	0	0	0
17	0	0	0	0
18	0	0	0	0
19	0	0	0	0

* New Observer Robert

MIN	SECONDS 0	15	30	45
20	0	0	0	0
21	0	0	0	0
22	0	0	0	0
23	0	0	0	0
24		0	0	0
25	0	0	0	0
26		0	0	0
27	0	0	0	0
28	0	0	0	0
29	0	0	0	0
30	0	0	0	0
31	0	0	0	0
32	0	0	0	0
33	0	0	0	0
34	0	0	0	0
35	0	0	0	0
36	0	0	0	0
37	0	0	0	0
38	0	0	0	0
39	0	0	0	0

MIN	SECONDS 0	15	30	45
40	0	0	0	0
41	0	0	0	0
42	0	0	0	0
43	0	0	0	0
44	0	0	0	0
45	0	0	0	0
46	0	0	0	0
47	0	0	0	0
48	0	0	0	0
49	0	0	0	0
50	0	0	0	0
51	0	0	0	0
52	0	0	0	0
53	0	0	0	0
54	0	0	0	0
55	0	0	0	0
56	0	0	0	0
57	0	0	0	0
58	0	0	0	0
59	0	0	0	0

Orientation:

- o Source
- ✱ Sun
- → Wind Direction & Speed
- + Observation Point

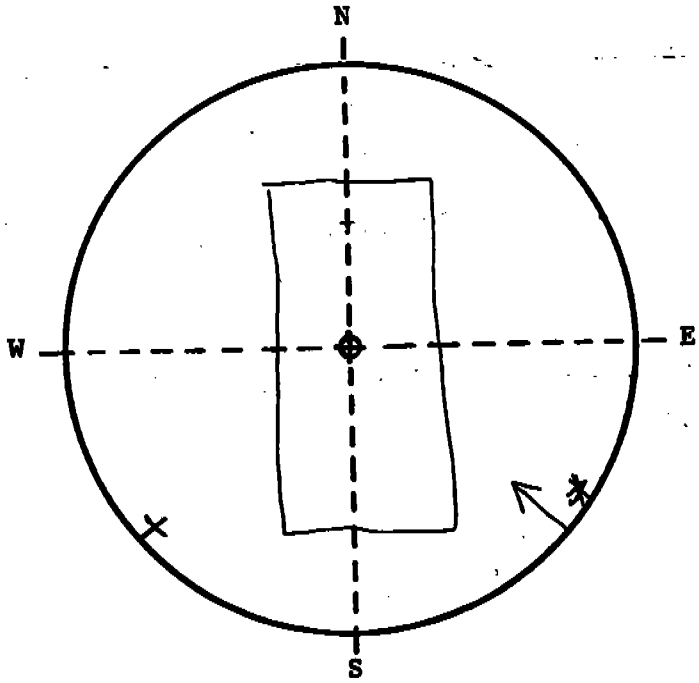

Remarks Clear Skies

Wind 0-5 mph

Observation Record

Observer Robert Olsen

Location 4th Battery Shed - West

Time: Start 10:00 End 11:06

Date Dec. 29 82

MIN	SECONDS 0	15	30	45
0	0	0	0	0
1	0	0	0	0
2	0	0	0	0
3	0	0	0	0
4	0	0	0	0
5	0	0	0	0
6	0	0	0	0
7	0	0	0	0
8	0	0	0	0
9	0	0	0	0
10	0	0	0	0
11	0	0	0	0
12	0	0	0	0
13	0	0	0	0
14	0	0	0	0
15	0	0	0	0
16	0	0	0	0
17	0	0	0	0
18	0	0	0	0
19	0	0	0	0

MIN	SECONDS 0	15	30	45
20	0	0	0	0
21	0	0	0	0
22	0	0	0	0
23	0	0	0	0
24	0	0	0	0
25	0	0	0	0
26	0	0	0	0
27	0	0	0	0
28	0	0	0	0
29	0	0	0	0
30	0	0	0	0
31	0	0	0	0
32	0	0	0	0
33	0	0	0	0
34	0	0	0	0
35	0	0	0	0
36	0	0	0	0
37	0	0	0	0
38	0	0	0	0
39	0	0	0	0

MIN	SECONDS 0	15	30	45
40	0	0	0	0
41	0	0	0	0
42	0	0	0	0
43	0	0	0	0
44	0	0	0	0
45	0	0	0	0
46	0	0	0	0
47	0	0	0	0
48	0	0	0	0
49	0	0	0	0
50	0	0	0	0
51	0	0	0	0
52	0	0	0	0
53	0	0	0	0
54	0	0	0	0
55	0	0	0	0
56	0	0	0	0
57	0	0	0	0
58	0	0	0	0
59	0	0	0	0

Orientation:

- ⊙ Source
- ✱ Sun
- → Wind Direction & Speed
- + Observation Point

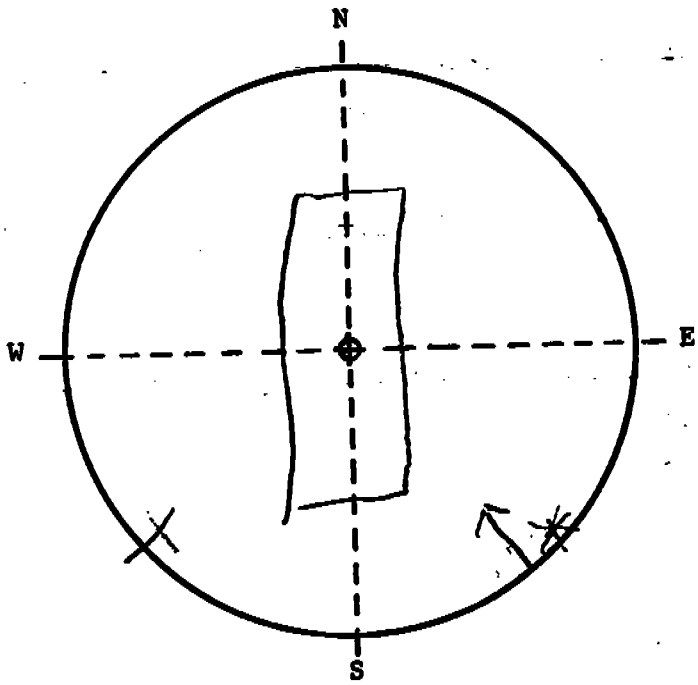

Remarks Clear Sky

Wind 0-5 MPH

13-34

Observation Record

West

Observer [illegible] **Location** [illegible]

Time: Start [illegible] **End** 1200 **Date** DEC. 28, 1982

MIN	SECONDS 0	15	30	45
0	0	0	0	0
1	0	0	0	0
2	0	0	0	0
3	0	0	0	0
4	0	0	0	0
5	0	0	0	0
6	0	0	0	0
7	0	0	0	0
8	0	0	0	0
9	0	0	0	0
10	0	0	0	0
11	0	0	0	0
12	0	0	0	0
13	0	0	0	0
14	0	0	0	0
15	0	0	0	0
16	0	0	0	0
17	0		0	0
18	0		0	0
19	0	0	0	0

MIN	SECONDS 0	15	30	45
20	0	0	0	0
21	5	5	0	0
22	0	0	0	0
23	0	0	0	0
24	0	0	0	0
25	0	0	0	0
26	0	0	0	0
27	0	0	0	0
28	0	0	0	0
29	0	0	0	0
30	0	0	0	0
31	0	0	0	0
32	0	0	0	0
33	0	0	0	0
34	0	0	0	0
35	0	0	0	0
36	0	0	0	0
37	0	0	0	0
38	0	0	0	0
39	0	0	5	5

North

North End

MIN	SECONDS 0	15	30	45
40	5	0	0	0
41	0	0	0	0
42	0	0	0	0
43	0	0	0	0
44	0	0	0	0
45	0	5	5	0
46	0	0	0	0
47	0	0	0	0
48	0	5	0	0
49	0	0	0	0
50	0	0	0	0
51	0	0	0	5
52	5	5	5	0
53	0	0	0	0
54	0	0	0	0
55	0	0	0	0
56	0	0	0	0
57	0	5	10	5
58	0	0	0	0
59	0	0	0	0

Orientation:

- Source
- Sun
- Wind Direction & Speed
- Observation Point

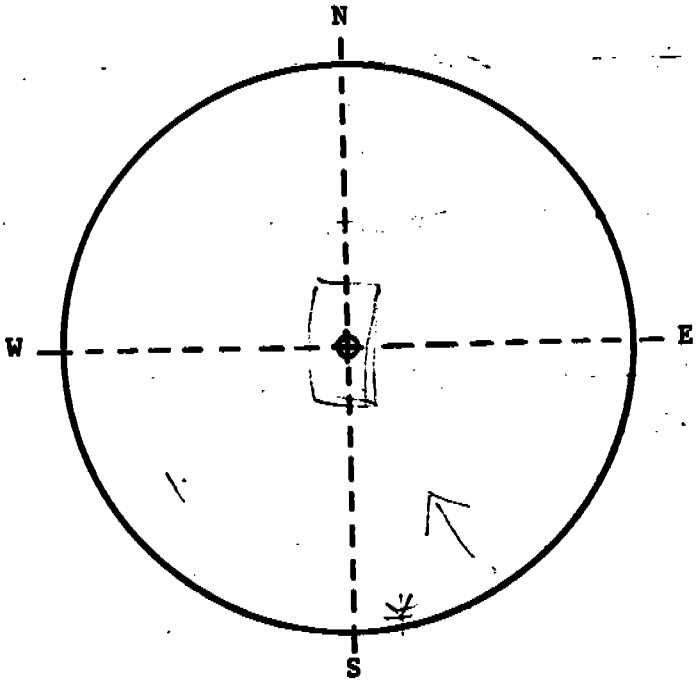

Remarks WIND [illegible]

BLUE SKY – [illegible]

Observation Record

Observer Newell Kitchen

Location Bath #4 Shed Coke Plant - west

Time: Start 1200 End 1300

Date 28 Dec 1982

MIN	SECONDS 0	15	30	45
0	0	0	0	0
1	0	0	0	0
2	0	0	0	0
3	0	0	0	0
4	0	0	0	0
5	0	0	0	0
6	0	0	0	0
7	0	0	0	0
8	0	0	5	10
9	15	10	10	10
10	5	5	5	0
11	0	0	0	0
12	5	0	0	0
13	0	0	0	0
14	0	0	0	0
15	0	0	0	0
16	0	0	0	0
17	0	0	0	0
18	0	0	0	0
19	0	0	0	0

MIN	SECONDS 0	15	30	45
20	0	0	0	0
21	0	0	0	0
22	0	0	0	5
23	10	5	5	5
24	0	0	0	0
25	0	0	0	0
26	0	0	0	0
27	0	0	0	0
28	0	0	0	0
29	0	0	0	0
30	0	0	0	0
31	0	0	0	0
32	0	0	0	0
33	0	0	0	0
34	0	0	0	0
35	0	0	0	0
36	0	0	0	0
37	0	0	0	0
38	0	0	0	5
39	5	5	0	0

Steam leaks

MIN	SECONDS 0	15	30	45
40	5	5	0	0
41	0	0	0	0
42	0	0	0	0
43	0	0	0	0
44	0	0	0	0
45	0	0	0	0
46	0	0	0	0
47	0	0	0	0
48	0	0	0	0
49	0	0	0	0
50	0	0	0	0
51	0	0	0	0
52	0	0	0	0
53	0	0	0	0
54	0	0	0	0
55	0	0	0	0
56	0	0	5	5
57	0	0	0	0
58	0	0	0	0
59	0	0	0	0

Orientation:

- Source
- Sun
- Wind Direction & Speed
- Observation Point

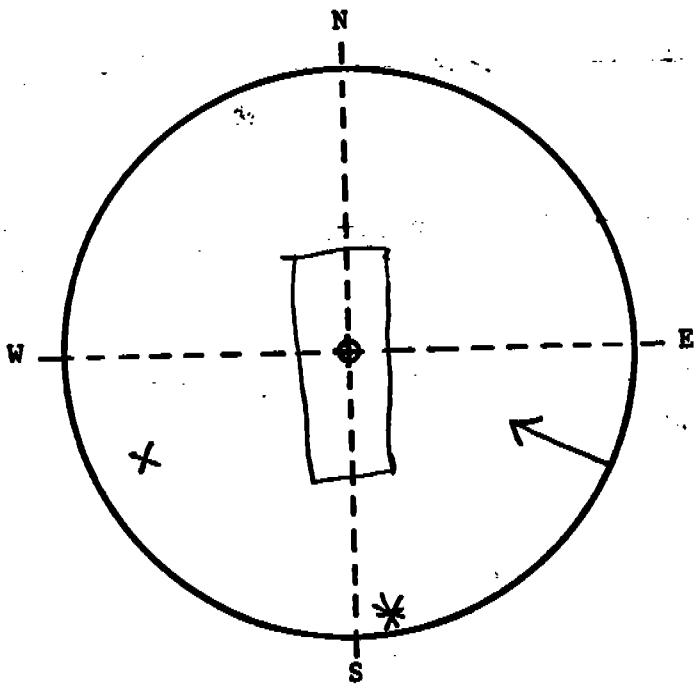

Remarks Wind 0-5 mph
Partly cloudy skies.

Observation Record

Observer Newell Kitchen

Location #4 Battery Sized - Coke Point West

Time: Start 13:00 End 14:00

Date 28 Dec 1982

MIN	SECONDS 0	15	30	45
0	0	0	0	0
1	0	0	0	5
2	5	5	5	5
3	5	0	5	5
4	5	5	5	0
5	0	0	0	5
6	5	5	0	0
7	0	0	0	0
8	0	0	0	0
9	0	0	0	0
10	0	0	0	0
11	0	0	0	0
12	0	0	0	0
13	0	0	0	0
14	0	0	0	0
15	0	0	0	0
16	0	0	0	0
17	0	0	0	0
18	0	0	0	0
19	0	0	0	0

North end

NBJ

MIN	SECONDS 0	15	30	45
20	0	0	0	0
21	0	0	0	0
22	0	0	0	0
23	0	0	0	0
24	0	0	0	0
25	0	0	0	0
26	0	0	0	0
27	0	0	0	0
28	0	0	0	0
29	0	0	0	0
30	5	5	5	5
31	5	5	0	0
32	0	0	0	0
33	0	0	0	0
34	0	0	0	0
35	0	0	0	0
36	0	0	0	0
37	0	0	0	5
38	0	0	0	0
39	0	0	0	0

NORTH END

MIN	SECONDS 0	15	30	45
40	0	0	0	0
41	0	0	0	0
42	0	0	0	0
43	0	0	0	0
44	0	0	0	0
45	0	0	0	0
46	0	0	0	0
47	0	0	0	0
48	0	0	0	0
49	0	0	0	0
50	0	0	0	0
51	0	0	0	0
52	0	0	0	0
53	0	0	0	0
54	0	0	0	0
55	0	0	0	0
56	0	0	0	0
57	0	0	0	0
58	0	0	0	0
59	0	0	0	0

Orientation:

- ⊙ Source
- ✱ Sun
- → Wind Direction & Speed
- + Observation Point

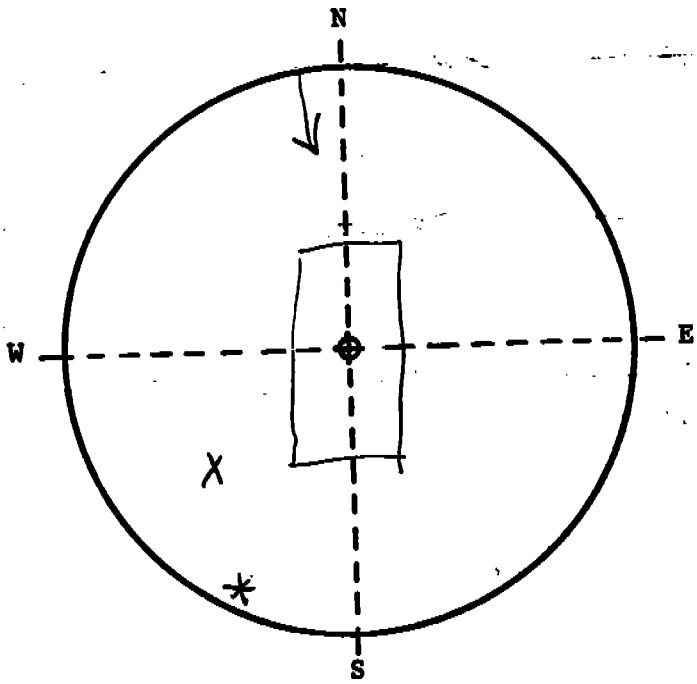

Remarks Wind 0-5mph

Cloudy

SUN NOT VISIBLE

SNOWING

Observation Record

west

Observer NORMAN JOHNSON

Location Coke Plant Shed Batt #4

Time: Start 14:00 End 15:00

Date Dec. 28, 1982

MIN	SECONDS 0	15	30	45
0	0	0	0	0
1	0	0	0	0
2	0	0	0	0
3	0	0	0	0
4	0	0	0	0
5	0	0	0	0
6	0	0	0	0
7	0	0	0	0
8	0	0	0	0
9	0	0	0	0
10	0	0	0	0
11	0	0	0	0
12	0	0	0	0
13	0	0	0	0
14	0	0	0	0
15	0	0	0	0
16	0	0	0	0
17	0	0	0	0
18	0	0	0	0
19	0	0	0	0

New observer Robert Olsen

MIN	SECONDS 0	15	30	45
20	0	0	0	0
21	0	0	0	0
22	0	0	0	0
23	0	0	0	0
24	0	0	0	0
25	0	0	0	0
26	0	0	0	0
27	0	0	0	0
28	0	0	0	0
29	0	0	0	0
30	0	0	0	0
31	0	0	0	0
32	0	0	0	0
33	0	0	0	0
34	0	0	0	0
35	0	0	0	0
36	0	0	0	0
37	0	0	0	0
38	0	0	0	0
39	0	0	0	0

MIN	SECONDS 0	15	30	45
40	0	0	0	0
41	0	0	0	0
42	0	0	0	0
43	0	0	0	0
44	0	0	0	0
45	0	0	0	0
46	0	0	0	0
47	0	0	0	0
48	0	0	0	0
49	0	0	0	0
50	0	0	0	0
51	0	0	0	0
52	0	0	0	0
53	0	0	0	0
54	0	0	0	0
55	0	0	0	0
56	0	0	0	0
57	0	0	0	0
58	0	0	0	0
59	0	0	0	0

Orientation:

- ⊙ Source
- ✱ Sun
- → Wind Direction & Speed
- + Observation Point

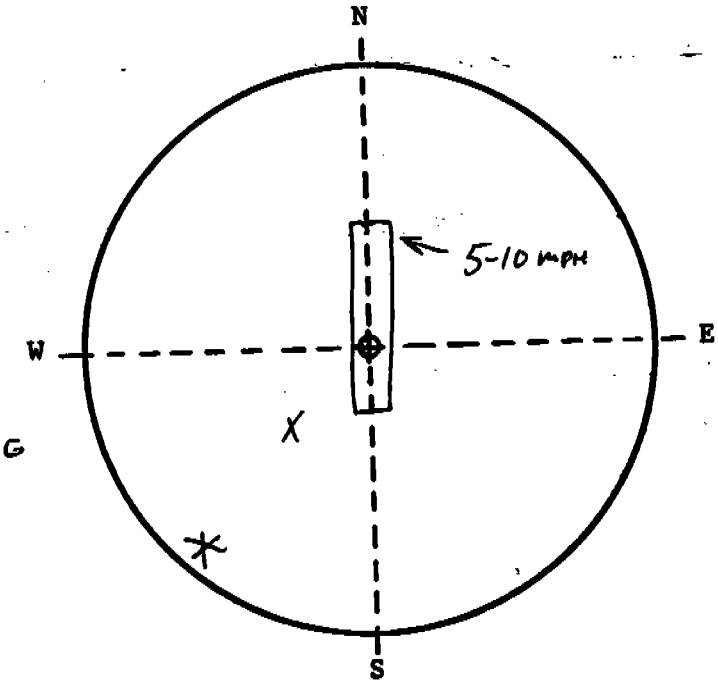

Remarks Cloudy - Light SNOW FALLING

West

Observation Record

Observer Robert Olson

Location Coke Plant Shed Roof

Time: Start 15:00 End 16:00

Date Dec. 28, 1982

MIN	SECONDS 0	15	30	45
0	0	0	0	0
1	0	0	0	0
2	0	0	0	0
3	0	0	0	0
4	0	0	0	0
5	0	0	0	0
6	0	0	0	0
7	0	0	0	0
8	0	0	0	0
9	0	0	0	0
10	0	0	0	0
11	0	0	0	0
12	0	0	0	0
13	0	0	0	0
14	0	0	0	0
15	0	0	0	0
16	0	0	0	0
17	0	0	0	0
18	0	0	0	0
19	0	0	0	0

MIN	SECONDS 0	15	30	45
20	0	0	0	0
21	0	0	0	0
22	0	0	0	0
23	0	0	0	0
24	0	0	0	0
25	0	0	0	0
26	0	0	0	0
27	0	0	0	0
28	0	0	0	0
29	0	0	0	0
30	0	0	0	0
31	0	0	0	0
32	0	0	0	0
33	0	0	0	0
34	0	0	0	0
35	0	0	0	0
36	0	0	0	0
37	0	0	0	0
38	0	0	0	0
39	0	0	0	0

MIN	SECONDS 0	15	30	45
40	0	0	0	0
41	0	0	0	0
42	0	0	0	0
43	0	0	0	0
44	0	0	0	0
45	0	0	0	0
46	0	0	0	0
47	0	0	0	0
48	0	0	0	0
49	0	0	0	0
50	0	0	0	0
51	0	0	0	0
52	0	0	0	0
53	0	0	0	0
54	0	0	0	0
55	0	0	0	0
56	0	0	0	0
57	0	0	0	0
58	0	0	0	0
59	0	0	0	0

Orientation:

- ⊙ Source
- ✱ Sun
- → Wind Direction & Speed
- + Observation Point

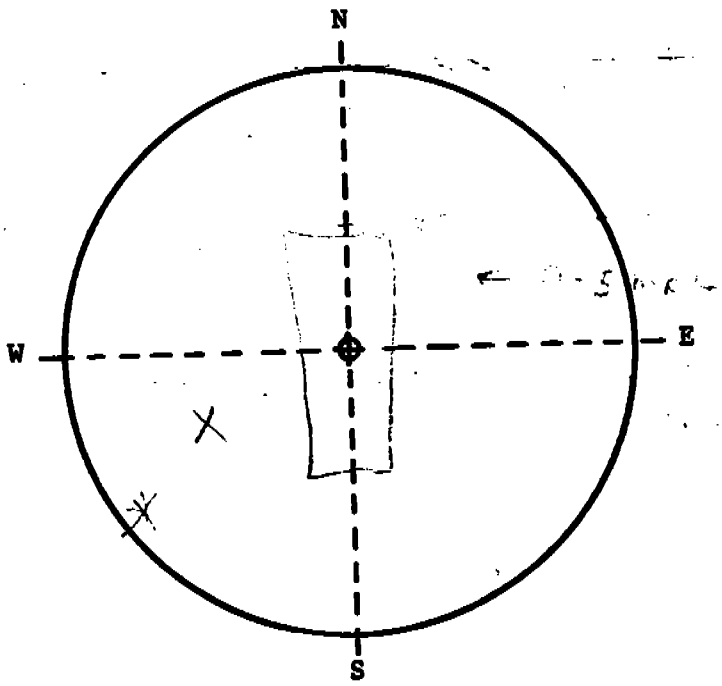

Remarks Cloudy - light snow

13-39

Observation Record

west

Observer Robert Olson

Location Coke Point Sand Box 9

Time: Start 1400 End [illegible]

Date Dec 28 1982

MIN	SECONDS 0	15	30	45
0	0	0	0	0
1	0	0	0	0
2	0	0	0	0
3	0	0	0	0
4	0	0	0	0
5	0	0	0	0
6	0	0	0	0
7	0	0	0	0
8	0	0	0	0
9	0	0	0	0
10	0	0	0	0
11	0	0	0	0
12	0	0	0	0
13	0	0	0	0
14	0	0	0	0
15	0	0	0	0
16	0	0	0	0
17	0	0	0	0
18	0	0	0	0
19	0	0	0	0

MIN	SECONDS 0	15	30	45
20	0	0	0	0
21	0	0	0	0
22	0	0	0	0
23	0	0	0	0
24	0	0	0	0
25	0	0	0	0
26	0	0	0	0
27	0	0	0	0
28	0	0	0	0
29	0	0	0	0
30	0	0	0	0
31	0	0	0	0
32	0	0	0	0
33	0	0	0	0
34	0	0	0	0
35	0	0	0	0
36	0	0	0	0
37	0	0	0	0
38	0	0	0	0
39	0	0	0	0

MIN	SECONDS 0	15	30	45
40	0	0	0	0
41	0	0	0	0
42	0	0	0	0
43	0	0	0	0
44	0	0	0	0
45	0	0	0	0
46	0	0	0	0
47	0	0	0	0
48	0	0	0	0
49	0	0	0	0
50	0	0	0	0
51	0	0	0	0
52	0	0	0	0
53	0	0	0	0
54	0	0	0	0
55	0	0	0	0
56	0	0	0	0
57	0	0	0	0
58	0	0	0	0
59	0	0	0	0

Orientation:

- ⊙ Source
- ✱ Sun
- → Wind Direction & Speed
- + Observation Point

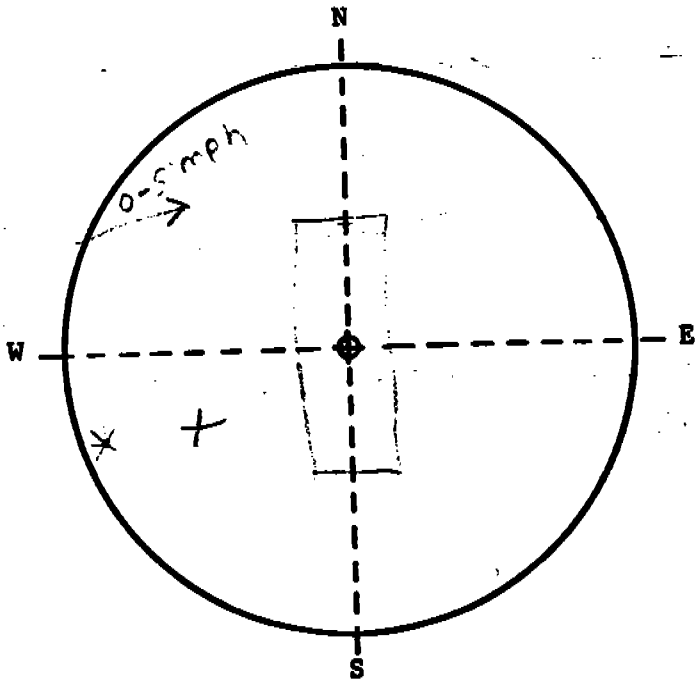

Remarks Cloudy

13-40

East

Observation Record

Observer KEITH SMITH

Location COKE PLANT #6 [illegible]

Time: Start 8:11 End 9:10

Date DEC. 28, 1982

MIN	SECONDS 0	15	30	45
0	0	0	0	0
1	0	0	0	0
2	0	0	0	0
3	0	0	0	0
4	0	0	0	0
5	0	0	0	0
6	0	0	0	0
7	0	0	0	0
8	0	0	0	0
9	0	0	0	0
10	0	0	0	0
11	0	0	0	0
12	0	0	0	0
13	0	0	0	0
14	0	0	0	0
15	0	0	0	0
16	0	0	0	0
17	0	0	0	0
18	0	0	0	0
19	0	0	0	0

MIN	SECONDS 0	15	30	45
20	0	0	0	0
21	0	0	0	0
22	5	0	0	0
23	0	0	0	0
24	0	0	0	0
25	0	0	0	0
26	0	0	0	0
27	0	0	0	0
28	0	0	0	0
29	0	0	0	0
30	0	0	0	0
31	0	0	0	0
32	0	0	0	0
33	0	0	0	0
34	0	0	0	0
35	0	0	0	0
36	0	0	0	0
37	0	0	0	0
38	0	0	0	0
39	0	0	5	0

MIN	SECONDS 0	15	30	45
40	0	0	0	0
41	0	0	0	0
42	0	0	0	0
43	0	0	0	0
44	0	0	0	0
45	0	0	0	0
46	0	0	0	0
47	0	0	0	0
48	0	0	0	0
49	0	0	0	0
50	0	0	0	0
51	0	0	0	0
52	0	0	0	0
53	0	0	0	0
54	0	0	0	0
55	0	0	0	0
56	0	0	0	0
57	0	0	0	0
58	0	0	0	0
59	0	0	0	0

Orientation:

- Source
- Sun
- Wind Direction & Speed
- Observation Point

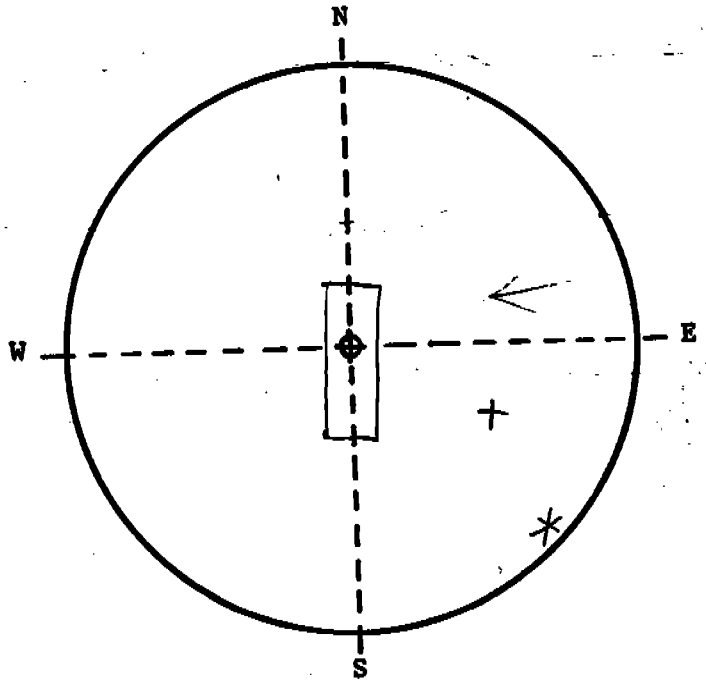

Remarks WIND 5-8 MPH

OVERCAST

Observation Record

East

Observer Keith B. Smith

Location Cole Plant Pittsburg

Time: Start 9:11 End 10:10

Date Dec. 28, 1982

MIN	SECONDS 0	15	30	45
0	0	0	0	0
1	0	0	0	0
2	0	0	0	0
3	0	0	0	0
4	0	0	0	0
5	0	0	0	0
6	0	0	0	0
7	0	0	0	0
8	0	0	0	0
9	0	0	0	0
10	0	0	0	0
11	0	0	0	0
12	0	0	0	0
13	0	0	0	0
14	0	0	0	0
15	0	0	0	0
16	0	0	0	0
17	0	0	0	0
18	0	0	0	0
19	0	0	0	0

MIN	SECONDS 0	15	30	45
20	0	0	0	0
21	0	0	0	0
22	0	0	0	0
23	0	0	0	0
24	0	0	0	0
25	0	0	0	0
26	0	0	0	0
27	0	0	0	0
28	0	0	0	0
29	0	0	0	0
30	0	0	0	0
31	0	0	0	0
32	0	0	0	0
33	0	0	0	0
34	0	0	0	0
35	0	0	0	0
36	0	0	0	0
37	0	0	0	0
38	0	0	0	0
39	0	0	0	0

MIN	SECONDS 0	15	30	45
40	0	0	0	0
41	0	0	0	0
42	0	0	0	0
43	0	0	0	0
44	0	0	0	0
45	0	0	0	0
46	0	0	0	0
47	0	0	0	0
48	0	0	0	0
49	0	0	0	0
50	0	0	0	0
51	0	0	0	0
52	0	0	0	0
53	0	0	0	0
54	0	0	0	0
55	0	0	0	0
56	0	0	0	0
57	0	0	0	0
58	0	0	0	0
59	0	0	0	0

Orientation:

- Source
- Sun
- Wind Direction & Speed
- Observation Point

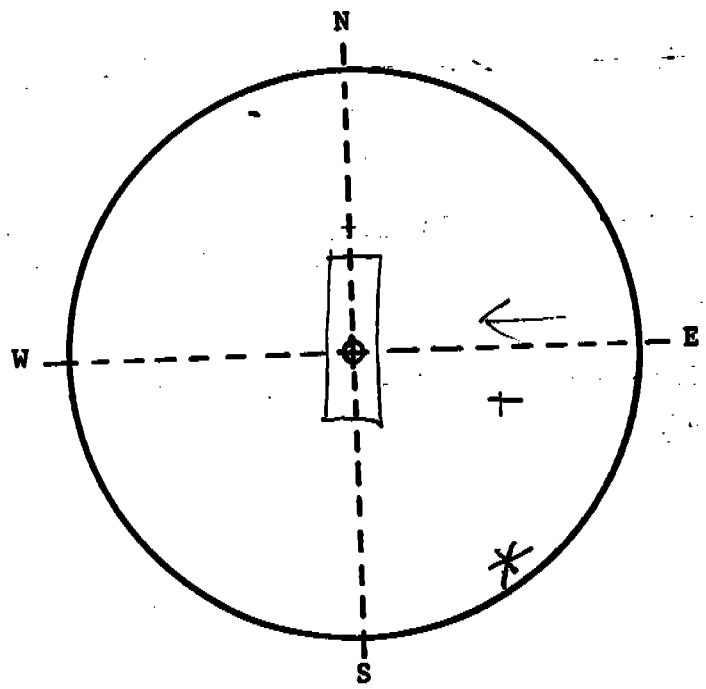

Remarks 11 MPH S.S.W. WIND

BLUE SKY

Observation Record

East

Observer KEITH B SMITH

Location CORE PLANT BATTERY

Time: Start 10:11 End 11:11

Date DEC. 28, 1952

MIN	SECONDS 0	15	30	45	
0	0	0	0	0	
1	0	0	0	0	
2	0	0	0	0	* NBJ
3	0	0	0	0	
4	0	0	0	0	
5	0	0	0	0	
6	0	0	0	0	
7	0	0	0	0	
8	0	0	0	0	
9	5	5	5	0	CENTER OF SHED
10	0	0	0	0	
11	0	0	0	0	
12	0	0	0	0	
13	0	0	0	0	
14	0	0	0	0	
15	0	0	0	0	
16	0	0	0	0	
17	0	0	0	0	
18	0	0	0	0	
19	0	0	0	0	

MIN	SECONDS 0	15	30	45
20	0	0	0	0
21	0	0	0	0
22	0	0	0	0
23	0	0	0	0
24	0	0	0	0
25	0	0	0	0
26	0	0	0	0
27	0	0	0	0
28	0	0	0	0
29	0	0	0	0
30	0	0	0	0
31	0	0	0	0
32	0	0	0	0
33	0	0	0	0
34	0	0	0	0
35	0	0	0	0
36	0	0	0	0
37	0	0	0	0
38	0	0	0	0
39	0	0	0	0

MIN	SECONDS 0	15	30	45
40	0	0	0	0
41	0	0	0	0
42	0	0	0	0
43	0	0	0	0
44	0	0	0	0
45	0	0	0	0
46	0	0	0	0
47	0	0	0	0
48	0	0	0	0
49	0	0	0	0
50	0	0	0	0
51	0	0	0	0
52	0	0	0	0
53	0	0	0	0
54	0	0	0	0
55	0	0	0	0
56	0	0	0	0
57	0	0	0	0
58	0	0	0	0
59	0	0	0	0

Orientation:

- ⊙ Source
- ✱ Sun
- → Wind Direction & Speed
- + Observation Point

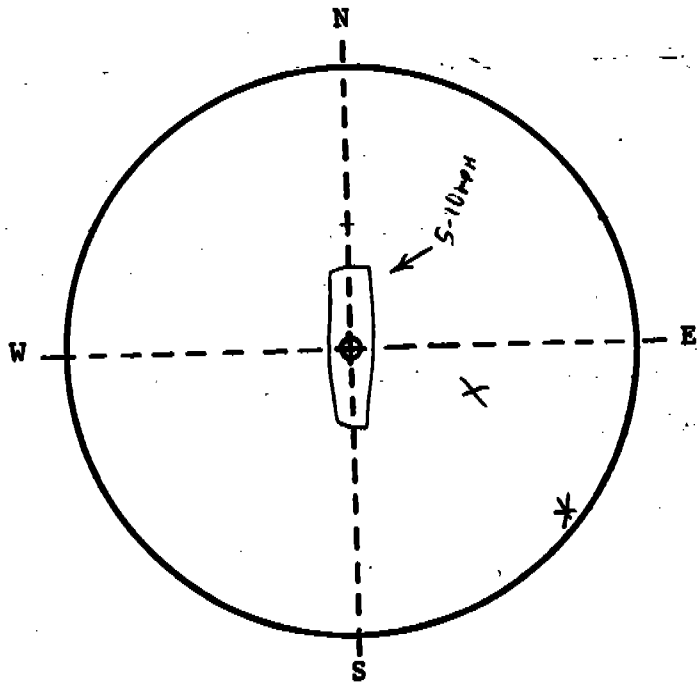

Remarks

13-43

Observation Record

Observer NORMAN JOHNSON

Location Coke shed - #4 BATT - East

Time: Start 11:11 Am End 12 11

Date Dec. 28, 1982

MIN	SECONDS 0	15	30	45	
0	0	0	0	0	
1	0	0	0	0	
2	0	0	0	0	
3	0	0	0	0	
4	0	0	0	0	
5	0	0	0	0	
6	0	0	0	0	
7	0	0	0	5	NEAR NORTH CROSSOVER
8	5	5	0	0	
9	0	0	0	0	
10	0	0	0	0	
11	0	0	0	0	
12	0	0	0	0	
13	0	0	0	0	
14	0	0	0	0	
15	0	0	0	0	
16	0	0	0	0	
17	0	0	0	0	
18	0	0	0	0	
19	0	0	0	0	

MIN	SECONDS 0	15	30	45
20	0	0	0	0
21	0	0	0	0
22	0	0	0	0
23	0	0	0	0
24	0	0	0	0
25	0	0	0	0
26	0	0	0	0
27	0	0	0	0
28	0	0	0	0
29	0	0	0	0
30	0	0	0	0
31	0	0	0	0
32	0	0	0	0
33	0	0	0	0
34	0	0	0	0
35	0	0	0	0
36	0	0	0	0
37	0	0	0	0
38	0	0	0	0
39	0	0	0	0

MIN	SECONDS 0	15	30	45	
40	0	0	0	0	
41	0	0	0	0	
42	0	0	0	0	
43	0	0	0	0	
44	0	0	0	0	
45	0	0	0	0	
46	0	0	0	0	
47	0	0	0	0	
48	0	0	0	0	
49	0	0	0	0	
50	0	0	0	0	
51	0	0	0	0	
52	0	0	0	0	
53	0	0	0	0	
54	0	0	0	0	
55	0	0	10	10	NEAR NORTH CROSSOVER
56	5	5	0	5	
57	0	0	0	0	
58	0	0	0	0	
59	0	0	0	0	

Orientation:

- ⊙ Source
- ✱ Sun
- → Wind Direction & Speed
- + Observation Point

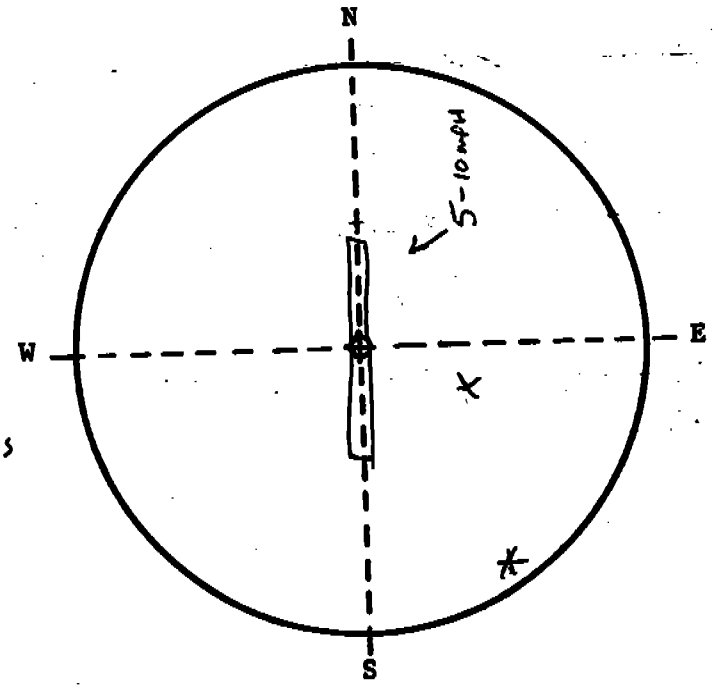

Remarks Blue sky SCATTERED CLOUDS

Observation Record

Observer NORMAN JOHNSON

Location Coke shed - #4 BATT - East

Time: Start 12:11 pm End 1311

Date Dec. 28, 1982

MIN	SECONDS 0	15	30	45
0	0	0	0	0
1	0	0	0	0
2	0	0	0	0
3	0	0	0	0
4	0	0	0	0
5	0	0	0	0
6	0	0	0	0
7	0	0	0	0
8	0	0	0	0
9	0	0	0	0
10	0	0	0	0
11	0	0	0	0
12	0	0	0	0
13	0	0	0	0
14	0	0	0	0
15	0	0	0	0
16	0	0	0	0
17	0	0	0	0
18	0	0	0	0
19	0	0	0	0

MIN	SECONDS 0	15	30	45
20	0	0	0	0
21	0	0	0	0
22	0	0	0	0
23	0	0	0	0
24	0	0	0	0
25	0	0	0	0
26	0	0	0	0
27	0	0	0	0
28	0	0	0	0
29	0	0	0	0
30	0	0	0	0
31	0	0	0	0
32	0	0	0	0
33	0	0	0	0
34	0	0	0	0
35	0	0	0	0
36	0	0	0	0
37	0	0	0	0
38	0	0	0	0
39	0	0	0	0

MIN	SECONDS 0	15	30	45
40	0	0	0	0
41	0	0	0	0
42	0	0	0	0
43	0	0	0	0
44	0	0	0	0
45	0	0	0	0
46	0	0	0	0
47	0	0	0	0
48	0	0	0	0
49	0	0	0	0
50	0	0	0	0
51	0	0	0	0
52	0	0	0	0
53	0	0	0	0
54	0	0	0	0
55	0	0	0	0
56	0	0	0	0
57	0	0	0	0
58	0	0	0	0
59	0	0	0	0

DP RELIEVED NORM

EMISSIONS FROM DOOR REMOVAL P/S.

STEAM FROM QUENCHED COKE

Orientation:

- Source
- Sun
- Wind Direction & Speed
- Observation Point

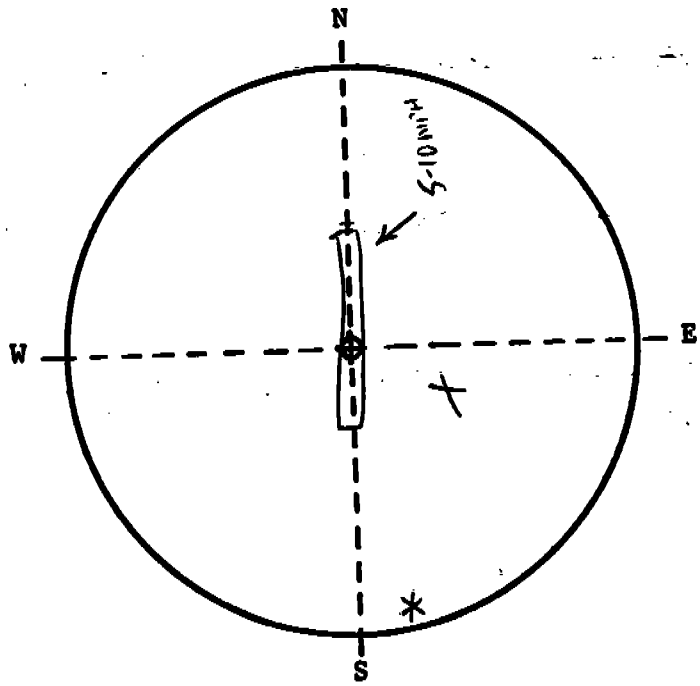

Remarks Light to Med. Cloud Background

STARTED SNOWING AGAIN ABOUT 12:30 pm

1:05 - P.M. - SNOWING

Observation Record

Observer DENNIS PHISTER

Location TOPSIDE #4 BATT COKESHED East

Time: Start 1:11 P.M. End 1411

Date 12-28-82

MIN	SECONDS 0	15	30	45
0	0	0	0	0
1	0	0	0	0
2	0	0	0	0
3	0	0	0	0
4	0	0	0	0
5	0	0	0	0
6	0	0	0	0
7	0	0	0	0
8	0	0	0	0
9	0	0	0	0
10	0	0	0	0
11	0	0	0	0
12	0			0
13	0			
14	0			
15	0	0	0	0
16	0	0	0	0
17	0	0	0	0
18	0	0	0	0
19	0	0	0	0

OFFTAKE EMISSIONS NORTH END P/SIDE.

STEAM FROM COKE QUENCH

STEAM FROM QUENCHED COKE

STEAM FROM QUENCHED COKE

MIN	SECONDS 0	15	30	45
20	0	0	0	0
21	0	0	0	0
22	0	0	0	0
23	0	0	0	0
24	0	0	0	0
25	0	0	0	0
26	0	0	0	0
27	0	0	0	0
28	0	0	0	0
29	0	0	0	0
30	0	0	0	0
31	0	0	0	0
32	0	0	0	0
33	0	0	0	0
34	0	0	0	0
35	0	0	0	0
36	0	0	0	0
37	0	0	0	0
38	0	0	0	0
39	0	0	0	0

DOOR EMISSIONS #16 PUSH SIDE.

MIN	SECONDS 0	15	30	45
40	0	0	0	0
41	0	0	0	0
42	0	0	0	0
43	0	0	0	0
44	0	0	0	0
45	0	0	0	0
46	0	0	0	0
47	0	0	0	0
48	0	0	0	0
49	0	0	0	0
50	0	0	0	0
51	0	0	0	0
52	0	0	0	0
53	0	0	0	0
54	0	0	0	0
55	0	0	0	0
56	0	0	0	0
57	0	0	0	0
58	0	0	0	0
59	0	0	0	0

CHARGED #36

QUENCH STEAM

Orientation:

- Source
- Sun
- Wind Direction & Speed SOUTH 5-10 MPH
- Observation Point

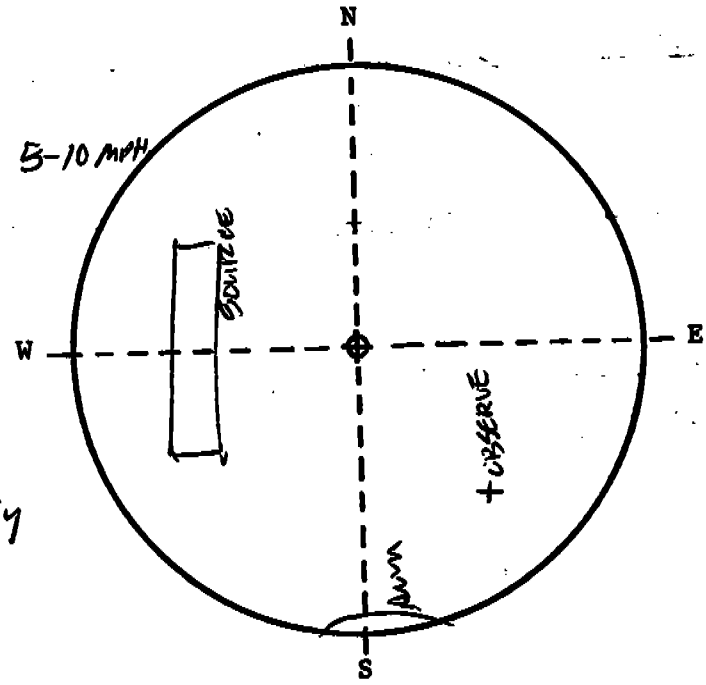

Remarks 1:15 P.M. STILL SNOWING SKY-OVERCAST. POOR VISIBILITY 2:09 P.M. Light SNOW

Observation Record

Observer DENNIS PHISTER

Location TOPSIDES 4 BATT. East COKE SHED

Time: Start 2:11 P.M. End 1511

Date 12-28-82

MIN	SECONDS 0	15	30	45
0	0	0	0	0
1	0	0	0	0
2	0	0	0	0
3	0	0	0	0
4	0	0	0	0
5	0	0	0	0
6	0	0	0	0
7	0	0	0	0
8	0	0	0	0
9	0	0	0	0
10	0	0	0	0
11	0	0	0	0
12	0	0	0	0
13	0	0	0	0
14	0	0	0	0
15	0	0	0	0
16	0	0	0	0
17	0	0	0	0
18	0	0	0	0
19	0	0	0	0

QUENCH STEAM

#56 PUSHED OFF THE EMISSIONS

2:51

MIN	SECONDS 0	15	30	45
20	0	0	0	0
21	0	0	0	0
22	0	0	0	0
23	0	0	0	0
24	0	0	0	0
25	0	0	0	0
26	0	0	0	0
27	0	0	0	0
28	0	0	0	0
29	0	0	0	0
30	0	0	0	0
31	0	0	0	0
32	0	0	0	0
33	0	0	0	0
34	0	0	0	0
35	0	0	0	0
36	0	0	0	0
37	0	0	0	0
38	0	0	0	0
39	0	0	0	0

LEAKS AT TOP OF SHED NORTH END.

2:57

MIN	SECONDS 0	15	30	45
40	0	0	0	0
41	0	0	0	0
42	0	0	0	0
43	0	0	0	0
44	0	0	0	0
45	0	0	0	0
46	0	0	0	0
47	0	0	0	0
48	0	0	0	0
49	0	0	0	0
50	0	0	0	0
51	0	0	0	0
52	0	0	0	0
53	0	0	0	0
54	0	0	0	0
55	0	0	0	0
56	0	0	0	0
57	0	0	0	0
58	0	0	0	0
59	0	0	0	0

3:11

Orientation:

- ⊖ Source
- ✱ Sun
- → Wind Direction & Speed NW 5-10 MPH
- + Observation Point

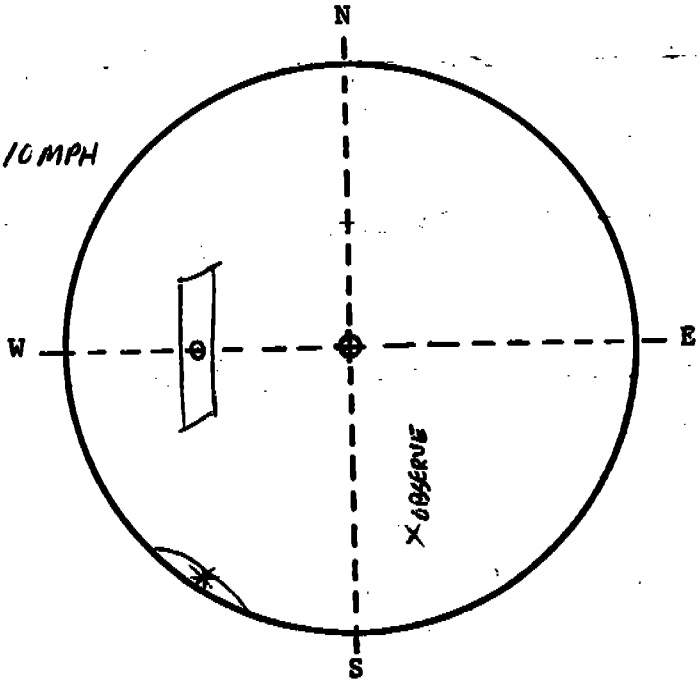

Remarks 2:15 P.M. - LIGHT SNOW PARTLY CLOUDY.

East

Observation Record

Observer DENNIS PHISTER

Location TOPSIDES 4 BATT COKE SHED

Time: Start 3:11 End 1611

Date 12-28-82

MIN	SECONDS 0	15	30	45
0	0	0	0	0
1	0	0	0	0
2	0	0	0	0
3	0	0	0	0
4	0	0	0	0
5	0	0	0	0
6	0	0	0	0
7	0	0	0	0
8	0	0	0	0
9	0	0	0	0
10	0	0	0	0
11	0	0	0	0
12	0	0	0	0
13	0	0	0	0
14	0	0	0	0
15	0	0	0	0
16	0	0	0	0
17	0	0	0	0
18	0	0	0	0
19	0	0	0	0

3:31

MIN	SECONDS 0	15	30	45
20	0	0	0	0
21	0	0	0	0
22	0	0	0	0
23	0	0	0	0
24	0	0	0	0
25	0	0	0	0
26	0	0	0	0
27	0	0	0	0
28	0	0	0	0
29	0	0	0	0
30	0	0	0	0
31	0	0	0	0
32	0	0	0	0
33	0	0	0	0
34	0	0	0	0
35	0	0	0	0
36	0	0	0	0
37	0	0	0	0
38	0	0	0	0
39	0	0	0	0

3:51

STEAM LEAKS FROM TOP OF SHED.

SHIFT ENDED.

MIN	SECONDS 0	15	30	45
40	0	0	0	0
41	0	0	0	0
42	0	0	0	0
43	0	0	0	0
44	0	0	0	0
45	0	0	0	0
46	0	0	0	0
47	0	0	0	0
48	0	0	0	0
49	0	0	0	0
50	0	0	0	0
51	0	0	0	0
52	0	0	0	0
53	0	0	0	0
54	0	0	0	0
55	0	0	0	0
56	0	0	0	0
57	0	0	0	0
58	0	0	0	0
59	0	0	0	0

4:11

Orientation:

- ○ Source
- ✱ Sun
- → Wind Direction & Speed
- + Observation Point

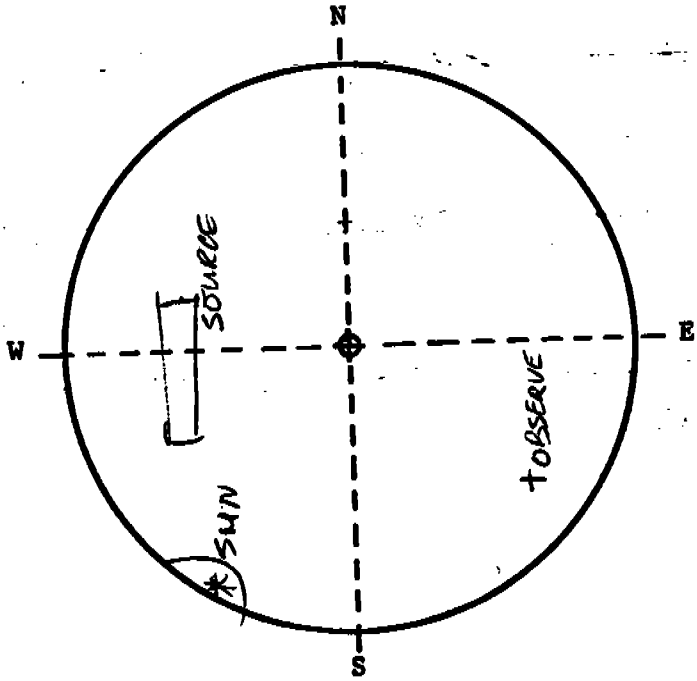

Remarks 3:25 P.M. SKY - PARTLY CLOUDY.
3:45 P.M. NO SNOW - VISIBILITY CLEAR

Observation Record

East

Observer DENNIS PHISTER Location TOPSIDES 4 BATT. COKE SHED.

Time: Start 4:11 P.M. End 4:46 P.M. Date 12-28-82

MIN	SECONDS 0	15	30	45
0	0	0	0	0
1	0	0	0	0
2	0	0	0	0
3	0	0	0	0
4	0	0	0	0
5	0	0	0	0
6	0	0	0	0
7	0	0	0	0
8	0	0	0	0
9	0	0	0	0
10	0	0	0	0
11	0	0	0	0
12	0	0	0	0
13	0	0	0	0
14	0	0	0	0
15	0	0	0	0
16	0	0	0	0
17	0	0	0	0
18	0	0	0	0
19	0	0	0	0

4:31

QUENCH STEAM

MIN	SECONDS 0	15	30	45
20	0	0	0	0
21	0	0	0	0
22	0	0	0	0
23	0	0	0	0
24	0	0	0	0
25	0	0	0	0
26	0	0	0	0
27	0	0	0	0
28	0	0	0	0
29	0	0	0	0
30	0	0	0	0
31	0	0	0	0
32	0	0	0	0
33	0	0	0	0
34				
35				
36				
37				
38				
39				

4:47

MIN	SECONDS 0	15	30	45
40				
41				
42				
43				
44				
45				
46				
47				
48				
49				
50				
51				
52				
53				
54				
55				
56				
57				
58				
59				

Orientation:

- o Source
- ✱ Sun
- → Wind Direction & Speed
- + Observation Point

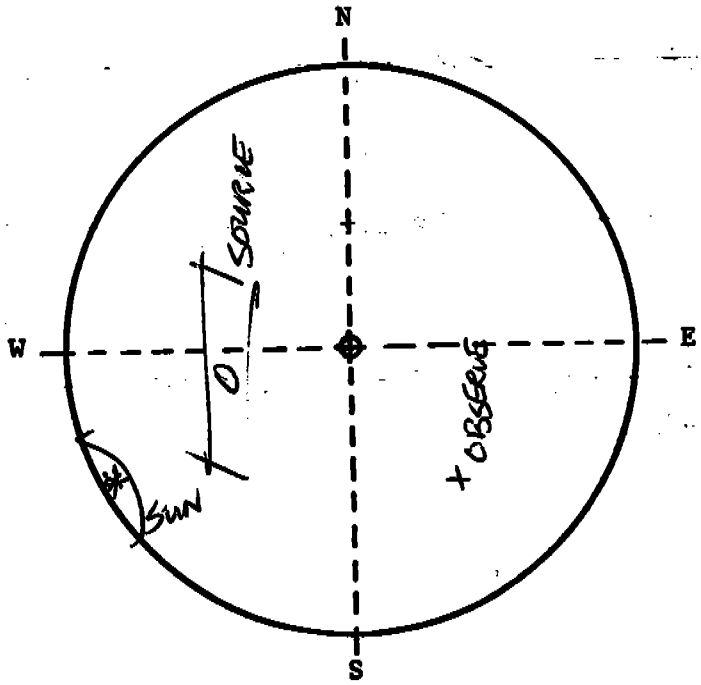

Remarks _____

Observation Record

Observer Newell Kitchen

Location #3 Battery Shed - Coke Plant - west

Time: Start 08:00 End 07:00

Date 29 Dec 82

MIN	SECONDS 0	15	30	45
0	0	0	0	0
1	0	0	0	0
2	0	0	0	0
3	0	0	0	0
4	0	0	0	0
5	0	0	0	0
6	0	0	0	0
7	0	0	0	0
8	0	0	0	0
9	0	0	0	0
10	0	0	0	0
11	0	0	0	0
12	0	0	0	0
13	0	0	0	0
14	0	0	0	0
15	0	0	0	0
16	0	0	0	0
17	0	0	0	0
18	0	0	0	0
19	0	0	0	0

MIN	SECONDS 0	15	30	45
20	0	0	0	0
21	0	0	0	0
22	0	0	0	0
23	0	0	0	0
24	0	0	0	0
25	0	0	0	0
26	0	0	0	0
* 27	0	0	0	0
28	0	0	0	0
29	0	0	0	0
* 30	0	0	0	0
31	0	0	0	0
32	0	0	0	0
33	0	0	0	0
34	0	0	0	0
* 35	0	0	0	0
36	0	0	0	0
37	0	0	0	0
38	0	0	0	0
39	0	0	0	0

MIN	SECONDS 0	15	30	45
* 40	0	0	0	0
41	0	0	0	0
42	0	0	0	0
43	0	0	0	0
44	0	0	0	0
45	0	0	0	0
46	0	0	0	0
47	0	0	0	0
★ 48	0	0	0	0
49	0	0	0	0
50	0	0	0	0
51	0	0	0	0
52	0	0	0	0
53	0	0	0	0
54	0	0	0	0
★ 55	0	0	0	0
56	0	0	0	0
57	0	0	0	0
58	0	0	0	0
59	0	0	0	0

Orientation:

- ⊖ Source
- ✱ Sun
- → Wind Direction & Speed
- + Observation Point

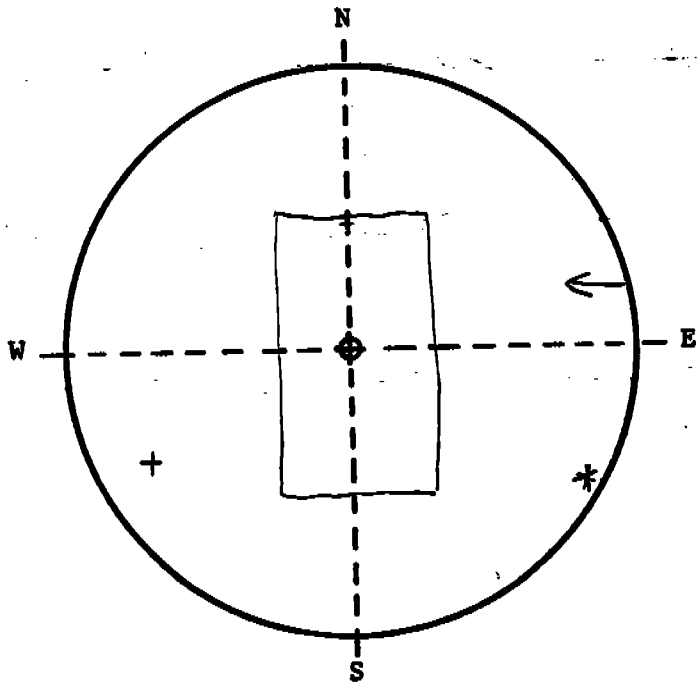

Remarks Wind: 0-5 mph

Clear Skies

* Part of shed block by escaped steam from roof

★ Upper shed door left open - steam escaped

13-50

Observation Record

Observer Newell Kitchen

Location #3 Battery Shed - Coke Oven - West

Time: Start 09:00 End 10:00

Date 29 Dec. 82

MIN	SECONDS 0	15	30	45
0	0	0	0	0
1	0	0	0	0
2	0	0	0	0
3	0	0	0	0
4	0	0	0	0
5	0	0	0	0
6	0	0	0	0
7	0	0	0	0
* 8	0	0	0	0
9	0	0	0	0
10	0	0	0	0
11	0	0	0	0
12	0	0	0	0
13	0	0	0	0
14	0	0	0	0
15	0	0	0	0
16	0	0	0	0
17	0	0	0	0
18	0	0	0	0
19	0	0	0	0

I MRK

MIN	SECONDS 0	15	30	45
20	0	0	0	0
21	0	0	0	0
22	0	0	0	0
23	0	0	0	0
24	0	0	0	0
25	0	0	0	0
26	0	0	0	0
27	0	0	0	0
28	0	0	0	0
29	0	0	0	0
30	0	0	0	0
31	0	0	0	0
32	0	0	0	0
33	0	0	0	0
34	0	0	0	0
35	0	0	0	0
36	0	0	0	0
37	0	0	0	0
38	0	0	0	0
39	0	0	0	0

MIN	SECONDS 0	15	30	45
40	0	0	0	0
41	0	0	0	0
42	0	0	0	0
43	0	0	0	0
44	0	0	0	0
45	0	0	0	0
46	0	0	0	0
47	0	0	0	0
48	0	0	0	0
49	0	0	0	0
50	0	0	0	0
51	0	0	0	0
52	0	0	0	0
53	0	0	0	0
54	0	0	0	0
55	0	0	0	0
* 56	0	0	0	0
57	0	0	0	0
58	0	0	0	0
59	0	0	0	0

Orientation:

- Source
- Sun
- Wind Direction & Speed
- Observation Point

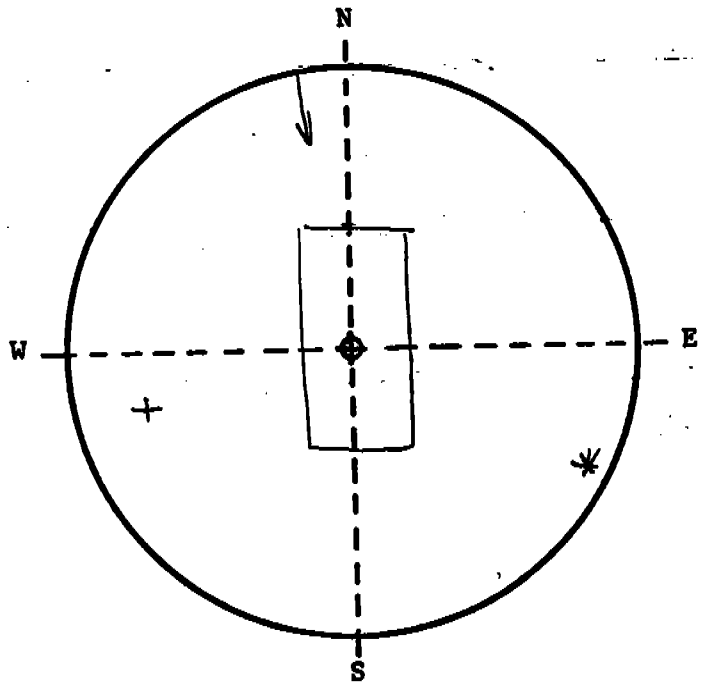

Remarks Wind: 0-5 mph

Clear skies

* Steam escaped out of way blocked part of shed view

Observation Record

Observer MRK

Location USS Coke Shed # 3 westside

Time: Start 10:00 End 11:00

Date 29 Dec. 1982

MIN	SECONDS 0	15	30	45
0	0	0	0	0
1	0	0	0	0
2	0	0	0	0
3	0	0	0	0
4	0	0	0	0
5	0	0	0	0
6	0	0	0	0
7	0	0	0	0
8	0	0	0	0
9	0	0	0	0
10	0	0	0	0
11	0	0	0	0
12	0	0	0	0
13	0	0	0	0
14	0	0	0	0
15	0	0	0	0
16	0	0	0	0
17	0	0	0	0
18	0	0	0	0
19	0	0	0	0

MIN	SECONDS 0	15	30	45	
20	0	0	0	0	
21	0	0	0	0	
22	0	0	0	0	
23	0	0	0	0	
24	0	0	0	0	
25	0	0	0	0	
26	0	0	0	0	
27	0	0	0	0	
28	0	0	0	0	
29	0	0	0	0	
30	0	0	0	0	
31	0	0	0	0	
32	0	0	0	0	
33	0	0	0	0	
34	0	0	0	0	
35	0	0	0	0	N&S
36	0	0	0	0	
37	0	0	0	0	
38	0	0	0	0	
39	0	0	0	0	

MIN	SECONDS 0	15	30	45
40	0	0	0	0
41	0	0	0	0
42	0	0	0	0
43	0	0	0	0
44	0	0	0	0
45	0	0	0	0
46	0	0	0	0
47	0	0	0	0
48	0	0	0	0
49	0	0	0	0
50	0	0	0	0
51	0	0	0	0
52	0	0	0	0
53	0	0	0	0
54	0	0	0	0
55	0	0	0	0
56	0	0	0	0
57	0	0	0	0
58	0	0	0	0
59	0	0	0	0

Orientation:

- ⊖ Source
- ✱ Sun
- → Wind Direction & Speed
- + Observation Point

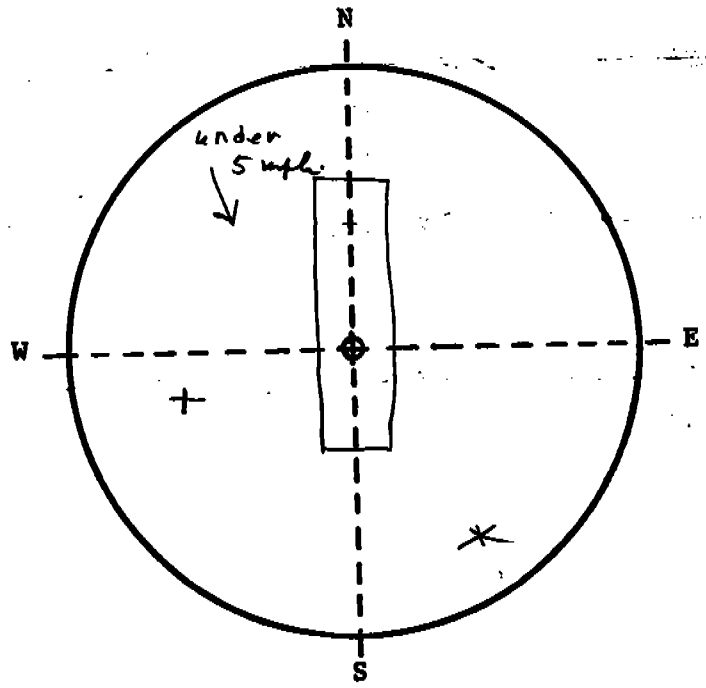

Remarks

Observation Record

Observer NORMAN JOHNSON

Location Coke PLANT #3 BATT. WEST SIDE

Time: Start 11:00 AM End 12:00 NOON

Date Dec. 29, 1982

MIN	SECONDS			
	0	15	30	45
0	0	0	0	0
1	0	0	0	0
2	0	0	0	0
3	0	0	0	0
4	0	0	0	0
5	0	0	0	0
6	0	0	0	0
7	0	0	0	0
8	0	0	0	0
9	0	0	0	0
10	0	0	0	0
11	0	0	0	0
12	0	0	0	0
13	0	0	0	0
14	0	0	0	0
15	0	0	0	0
16	0	0	0	0
17	0	0	0	0
18	0	0	0	0
19	0	0	0	0

MIN	SECONDS			
	0	15	30	45
20	0	0	0	0
21	0	0	0	0
22	0	0	0	0
23	0	0	0	0
24	0	0	0	0
25	0	0	0	0
26	0	0	0	0
27	0	0	0	0
28	0	0	0	0
29	0	0	0	0
30	0	0	0	0
31	0	0	0	0
32	0	0	0	0
33	0	0	0	0
34	0	0	0	0
35	0	0	0	0
36	0	0	0	0
37	0	0	0	0
38	0	0	0	0
39	0	0	0	0

MIN	SECONDS			
	0	15	30	45
40	0	0	0	0
41	0	0	0	0
42	0	0	0	0
43	0	0	0	0
44	0	0	0	0
45	0	0	0	0
46	0	0	0	0
47	0	0	0	0
48	0	0	0	0
49	0	0	0	0
50	0	0	0	0
51	0	0	0	0
52	0	0	0	0
53	0	0	0	0
54	0	0	0	0
55	0	0	0	0
56	0	0	0	0
57	0	0	0	0
58	0	0	0	0
59	0	0	0	0

Orientation:

- ⊖ Source
- ✱ Sun
- → Wind Direction & Speed
- + Observation Point

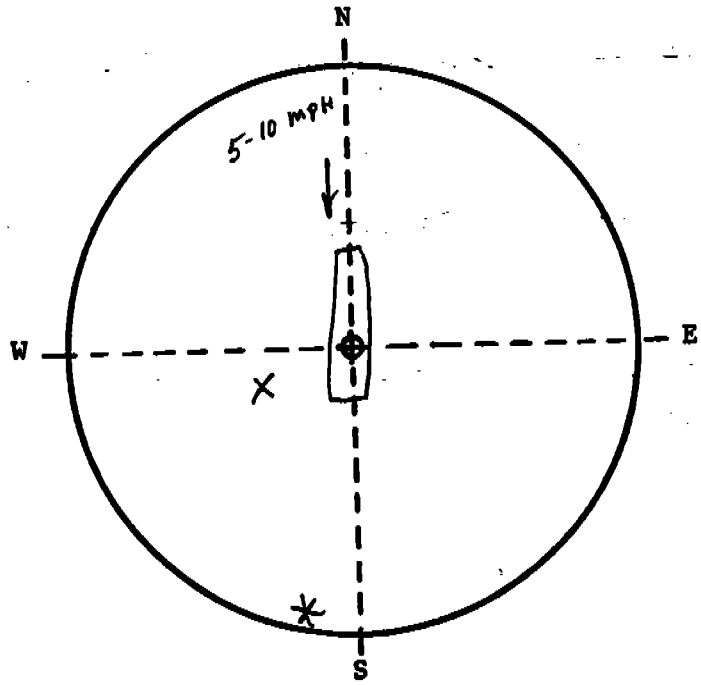

Remarks BLUE SKY

Observation Record

Observer Norman Johnson

Location Coke Shed #3 Batt West side

Time: Start 12:00 noon End 1:00 pm

Date Dec. 29, 1982

MIN	SECONDS 0	15	30	45
0	0	0	0	0
1	0	0	0	0
2	0	0	0	0
3	0	0	0	0
4	0	0	0	0
5	0	0	0	0
6	0	0	0	0
7	0	0	0	0
8	0	0	0	0
9	0	0	0	0
10	0	0	0	0
11	0	0	0	0
12	0	0	0	0
13	0	0	0	0
14	0	0	0	0
15	0	0	0	0
16	0	0	0	0
17	0	0	0	0
18	0	0	0	0
19	0	0	0	0

MIN	SECONDS 0	15	30	45
20	0	0	0	0
21	0	0	0	0
22	0	0	0	0
23	0	0	0	0
24	0	0	0	0
25	0	0	0	0
26	0	0	0	0
27	0	0	0	0
28	0	0	0	0
29	0	0	0	0
30	0	0	0	0
31	0	0	0	0
32	0	0	0	0
33	0	0	0	0
34	0	0	0	0
35	0	0	0	0
36	0	0	0	0
37	0	0	0	0
38	0	5	0	0
39	0	0	0	0

MIN	SECONDS 0	15	30	45
40	0	0	0	0
41	0	0	0	0
42	0	0	0	0
43	0	0	0	0
44	0	0	0	0
45	0	0	0	0
46	0	0	0	0
47	0	0	0	0
48	0	0	0	0
49	0	0	0	0
50	0	0	0	0
51	0	0	0	0
52	0	0	0	0
53	0	0	0	0
54	0	0	0	0
55	0	0	0	0
56	0	0	0	0
57	0	0	0	0
58	0	0	0	0
59	0	0	0	0

Orientation:

- Source
- Sun
- Wind Direction & Speed
- Observation Point

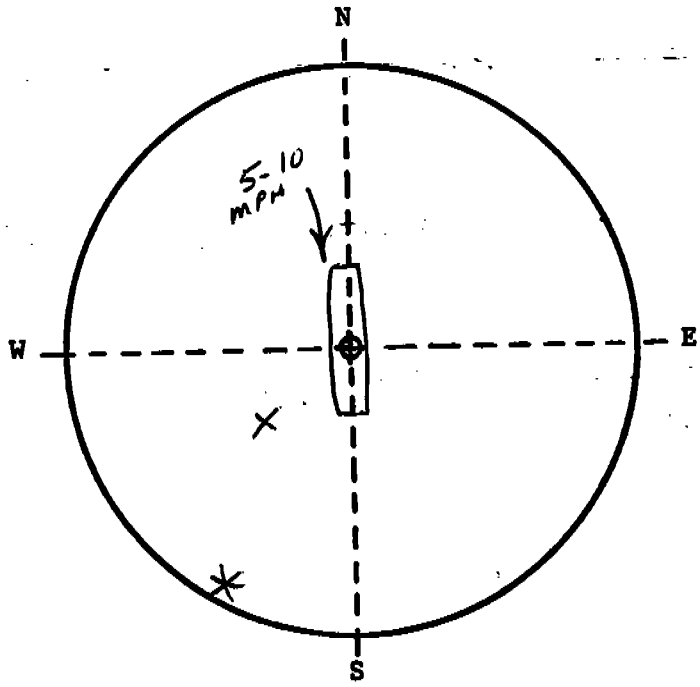

Remarks Blue sky

Observation Record

Observer Newell Kitchen

Location #3 Battery Shed - Coke Plant - west

Time: Start 13:00 End 14:00

Date 21 Dec. 1982

MIN	SECONDS 0	15	30	45
0	0	0	0	0
1	0	0	0	0
2	0	0	0	0
3	0	0	0	0
4	0	0	0	0
5	0	0	0	0
6	0	0	0	0
7	0	0	0	0
8	0	0	0	0
9	0	0	0	0
10	0	0	0	0
11	0	0	0	0
12	0	0	0	0
13	0	0	0	0
14	0	0	0	0
15	0	0	0	0
16	0	0	0	0
17	0	0	0	0
18	0	0	0	0
19	0	0	0	0

MIN	SECONDS 0	15	30	45
20	0	0	0	0
21	0	0	0	0
22	0	0	0	0
23	0	0	0	0
24	0	0	0	0
25	0	0	0	0
26	0	0	0	0
27	0	0	0	0
28	0	0	0	0
29	0	0	0	0
30	0	0	0	0
31	0	0	0	0
32	0	0	0	0
33	0	0	0	0
34	0	0	0	0
35	0	0	0	0
36	0	0	0	0
37	0	0	0	0
38	0	0	0	0
39	0	0	0	0

MIN	SECONDS 0	15	30	45
40	0	0	0	0
41	0	0	0	0
42	0	0	0	0
43	0	0	0	0
44	0	0	0	0
45	0	0	0	0
46	0	0	0	0
47	0	0	0	0
48	0	0	0	0
49	0	0	0	0
50	0	0	0	0
51	0	0	0	0
52	0	0	0	0
53	0	0	0	0
54	0	0	0	0
55	0	0	0	0
56	0	0	0	0
57	0	0	0	0
58	0	0	0	0
59	0	0	0	0

Orientation:

- Source
- Sun
- Wind Direction & Speed
- Observation Point

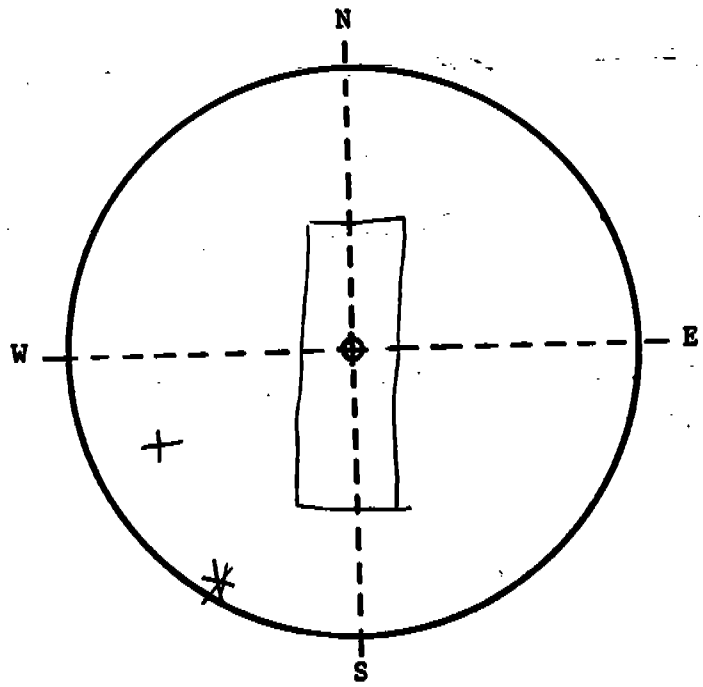

Remarks Wind: 0-5mph
Clear Skies.

Observation Record

Observer Newell Kitchen

Location #3 Battery Shed - west

Time: Start 14:00 End 15:00

Date 29 Dec '82

MIN	SECONDS 0	15	30	45
0	0	0	0	0
1	0	0	0	0
2	0	0	0	0
3	0	0	0	0
4	0	0	0	0
5	0	0	0	0
6	0	0	0	0
7	0	0	0	0
8	0	0	0	0
9	0	0	0	0
10	0	0	0	0
11	0	0	0	0
12	0	0	0	0
13	0	0	0	0
14	0	0	0	0
15	0	0	0	0
16	0	0	0	0
17	0	0	0	0
18	0	0	0	0
19	0	0	0	0

MIN	SECONDS 0	15	30	45
20	0	0	0	0
21	0	0	0	0
22	0	0	0	0
23	0	0	0	0
24	0	0	0	0
25	0	0	0	0
26	0	0	0	0
27	0	0	0	0
28	0	0	0	0
29	0	0	0	0
30	0	0	0	0
31	0	0	0	0
32	0	0	0	0
33	0	0	0	0
34	0	0	0	0
35	0	0	0	0
36	0	0	0	0
37	0	0	0	0
38	0	0	0	0
39	0	0	0	0

MIN	SECONDS 0	15	30	45
40	0	0	0	0
41	0	0	0	0
42	0	0	0	0
43	0	0	0	0
44	0	0	0	0
45	0	0	0	0
46	0	0	0	0
47	0	0	0	0
48	0	0	0	0
49	0	0	0	0
50	0	0	0	0
51	0	0	0	0
52	0	0	0	0
53	0	0	0	0
54	0	0	0	0
55	0	0	0	0
56	0	0	0	0
57	0	0	0	0
58	0	0	0	0
59	0	0	0	0

Orientation:

- ⊙ Source
- ✱ Sun
- → Wind Direction & Speed
- + Observation Point

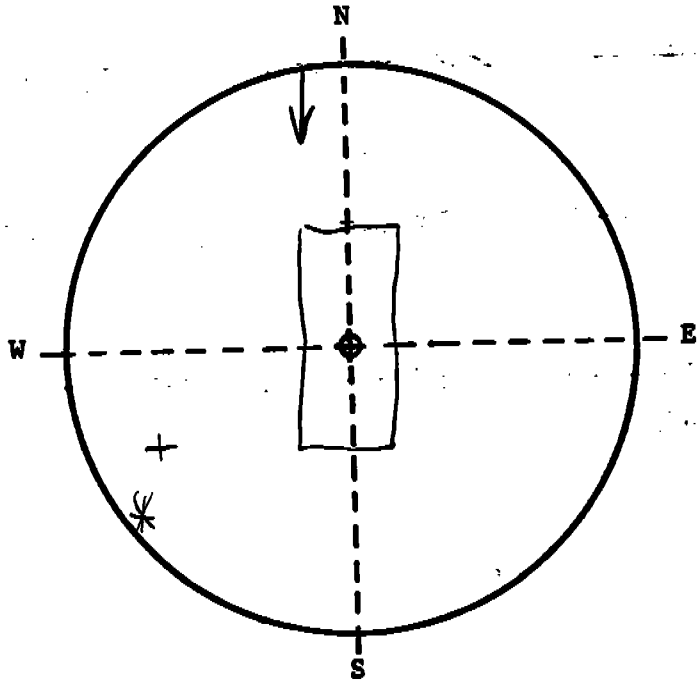

Remarks Wind: 0-5 mph

Clear Skies

West

Observation Record

Observer Newell Kitchen

Location #3 Battery Steel Coke Point

Time: Start 15:00 End 16:00

Date 29 Dec. 1982

MIN	SECONDS 0	15	30	45	
0	0	0	0	0	
1	0	0	0	0	
2	0	0	0	0	
3	0	0	0	0	
4	0	0	0	0	
5	0	0	0	0	
6	0	0	0	0	
7	0	0	0	0	
8	0	0	0	0	
9	0	0	0	0	
10	0	0	0	0	*
11	0	0	0	0	
12	0	0	0	0	
13	0	0	0	0	
14	0	0	0	0	*
15	0	0	0	0	
16	0	0	0	0	
17	0	0	0	0	
18	0	0	0	0	*
19	0	0	0	0	

MIN	SECONDS 0	15	30	45	
20	0	0	0	0	
21	0	0	0	0	
22	0	0	0	0	
23	0	0	0	0	*
24	0	0	0	0	
25	0	0	0	0	
26	0	0	0	0	
27	0	0	0	0	
28	0	0	0	0	*
29	0	0	0	0	
30	0	0	0	0	
31	0	0	0	0	
32	0	0	0	0	
33	0	0	0	0	
34	0	0	0	0	*
35	0	0	0	0	
36	0	0	0	0	
37	0	0	0	0	
38	0	0	0	0	*
39	0	0	0	0	

MIN	SECONDS 0	15	30	45
40	0	0	0	0
41	0	0	0	0
42	0	0	0	0
43	0	0	0	0
44	0	0	0	0
45	0	0	0	0
46	0	0	0	0
47	0	0	0	0
48	0	0	0	0
49	0	0	0	0
50	0	0	0	0
51	0	0	0	0
52	0	0	0	0
53	0	0	0	0
54	0	0	0	0
55	0	0	0	0
56	0	0	0	0
57	0	0	0	0
58	0	0	0	0
59	0	0	0	0

Orientation:

- Source
- Sun
- Wind Direction & Speed
- Observation Point

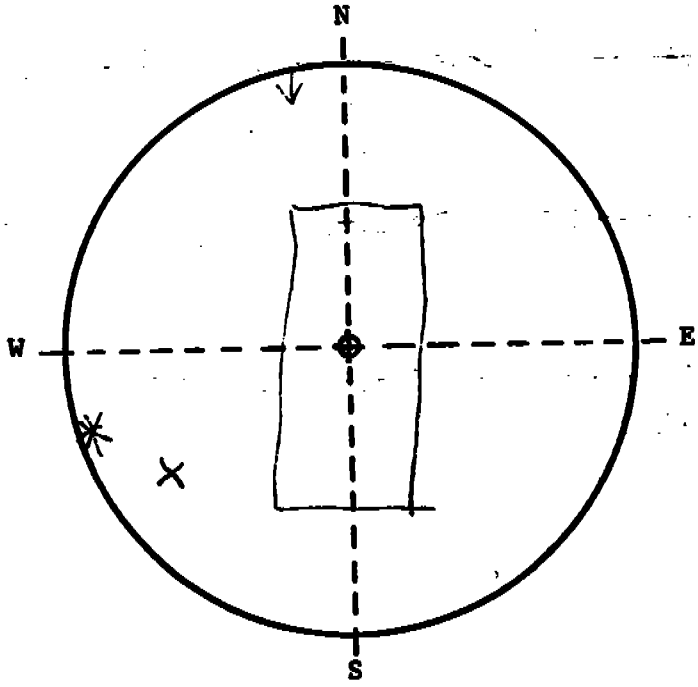

Remarks Wind: 0-5 mph

Clear Skies

* Escaped Steam blocked part of the shed vision

Observation Record

Observer Newell Kitchen

Location #3 Coke Plant - West

Time: Start 1600 End 1700

Date 29 Dec 1982

MIN	SECONDS 0	15	30	45
0	0	0	0	0
1	0	0	0	0
2	0	0	0	0
3	0	0	0	0
4	0	0	0	0
5	0	0	0	0
6	0	0	0	0
7	0	0	0	0
8	0	0	0	0
9	0	0	0	0
10	0	0	0	0
11	0	0	0	0
12	0	0	0	0
13	0	0	0	0
14	0	0	0	0
15	0	0	0	0
16	0	0	0	0
17	0	0	0	0
18	0	0	0	0
19	0	0	0	0

MIN	SECONDS 0	15	30	45
20	0	0	0	0
21	0	0	0	0
22	0	0	0	0
23	0	0	0	0
24	0	0	0	0
25	0	0	0	0
26	0	0	0	0
27	0	0	0	0
28	0	0	0	0
29	0	0	0	0
30	0	0	0	0
31	0	0	0	0
32	0	0	0	0
33	0	0	0	0
34	0	0	0	0
35	0	0	0	0
36	0	0	0	0
37	0	0	0	0
38	0	0	0	0
39	0	0	0	0

MIN	SECONDS 0	15	30	45
40	0	0	0	0
41	0	0	0	0
42	0	0	0	0
43	0	0	0	0
44	0	0	0	0
45	0	0	0	0
46	0	0	0	0
47	0	0	0	0
48	0	0	0	0
49	0	0	0	0
50	0	0	0	0
51	0	0	0	0
52	0	0	0	0
53	0	0	0	0
54	0	0	0	0
55	0	0	0	0
56	0	0	0	0
57	0	0	0	0
58	0	0	0	0
59	0	0	0	0

* VEO stopped

Orientation:

- Source
- Sun
- Wind Direction & Speed
- Observation Point

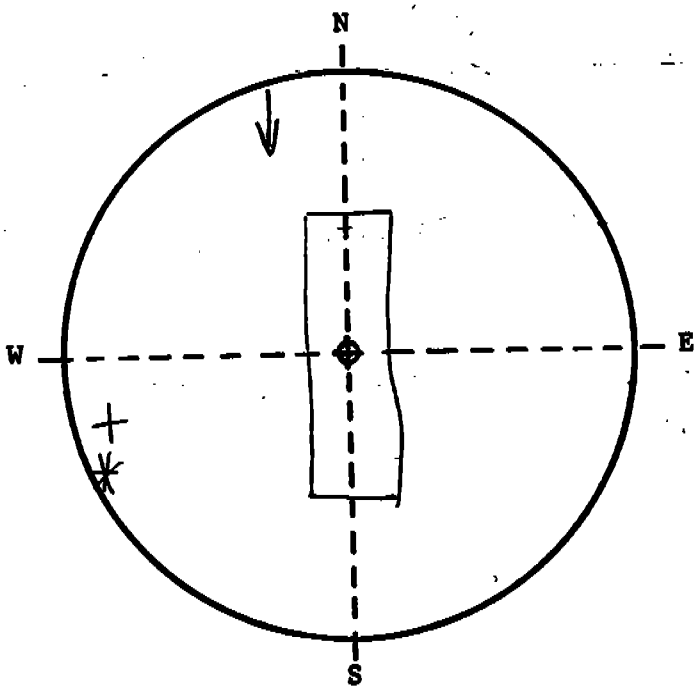

Remarks Wind: 0-5 mph

Clear Skies

13-58

Observation Record

Observer Norman Johnson

Location Coke Shed #3 Batt East

Time: Start 8:00Am End 9:00Am

Date Dec. 29 1982

MIN	SECONDS 0	15	30	45
0	0	0	0	0
1	0	0	0	0
2	0	0	0	0
3	0	0	0	0
4	0	0	0	0
5	0	0	0	0
6	0	0	0	0
7	0	0	0	0
8	0	0	0	0
9	0	0	0	0
10	0	0	0	0
11	0	0	0	0
12	0	0	0	0
13	0	0	0	0
14	0	0	0	0
15	0	0	0	0
16	0	0	0	0
17	0	0	0	0
18	0	0	0	0
19	0	0	0	0

MIN	SECONDS 0	15	30	45
20	0	0	0	0
21	0	0	0	0
22	0	0	0	0
23	0	0	0	0
24	0	0	0	0
25	0	0	0	0
26	0	0	0	0
27	0	0	0	0
28	0	0	0	0
29	0	0	0	0
30	0	0	0	0
31	0	0	0	0
32	0	0	0	0
33	0	0	0	0
34	0	0	0	0
35	0	0	0	0
36	0	0	0	0
37	0	0	0	0
38	0	0	0	0
39	0	0	0	0

MIN	SECONDS 0	15	30	45
40	0	0	0	0
41	0	0	0	0
42	0	0	0	0
43	0	0	0	0
44	0	0	0	0
45	0	0	0	0
46	0	0	0	0
47	0	0	0	0
48	0	0	0	0
49	5	5	0	0
50	0	0	0	0
51	0	0	0	0
52	0	0	0	0
53	0	0	0	0
54	0	0	0	0
55	0	0	0	0
56	0	0	0	0
57	0	0	0	0
58	0	0	0	0
59	0	0	0	0

North End

Orientation:

- Source
- Sun
- Wind Direction & Speed
- Observation Point

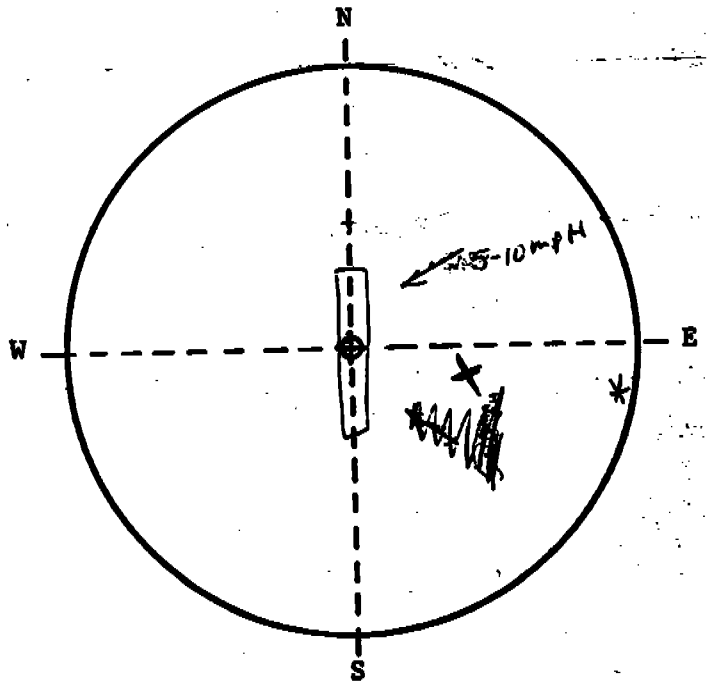

Remarks Blue sky

Observation Record

Observer NORMAN JOHNSON

Location COBB SHED #3 BATT East

Time: Start 9:00 AM End 10:00 AM

Date Dec. 29 1982

MIN	SECONDS 0	15	30	45
0	0	0	0	0
1	0	0	0	0
2	0	0	0	0
3	0	0	0	0
4	0	0	0	0
5	0	0	0	0
6	0	0	0	0
7	0	0	0	0
8	0	0	0	0
9	0	0	0	0
10	0	0	0	0
11	0	0	0	0
12	0	0	0	0
13	0	0	0	0
14	0	0	0	0
15	0	0	0	0
16	0	0	0	0
17	0	0	0	0
18	0	0	0	0
19	0	0	0	0

MIN	SECONDS 0	15	30	45
20	0	0	0	0
21	0	0	0	0
22	0	0	0	0
23	0	0	0	0
24	0	0	0	0
25	0	0	0	0
26	0	0	0	0
27	0	0	0	0
28	0	0	0	0
29	0	0	0	0
30	0	0	0	0
31	0	0	0	0
32	0	0	0	0
33	0	0	0	0
34	0	0	0	0
35	0	0	0	0
36	0	0	0	0
37	5	5	5	0
38	0	0	0	0
39	0	0	0	0

NEAR SOUTH CROSSOVER

MIN	SECONDS 0	15	30	45
40	0	0	0	0
41	0	0	0	0
42	0	0	0	0
43	0	0	0	0
44	0	0	0	0
45	0	0	0	0
46	0	0	0	0
47	0	0	0	0
48	0	0	0	0
49	0	0	0	0
50	0	0	0	0
51	0	0	0	0
52	0	0	0	0
53	0	0	0	0
54	0	0	0	0
55	0	0	0	0
56	0	0	0	0
57	0	0	0	0
58	0	0	0	0
59	0	0	0	0

Orientation:

- ⊙ Source
- ✱ Sun
- → Wind Direction & Speed
- + Observation Point

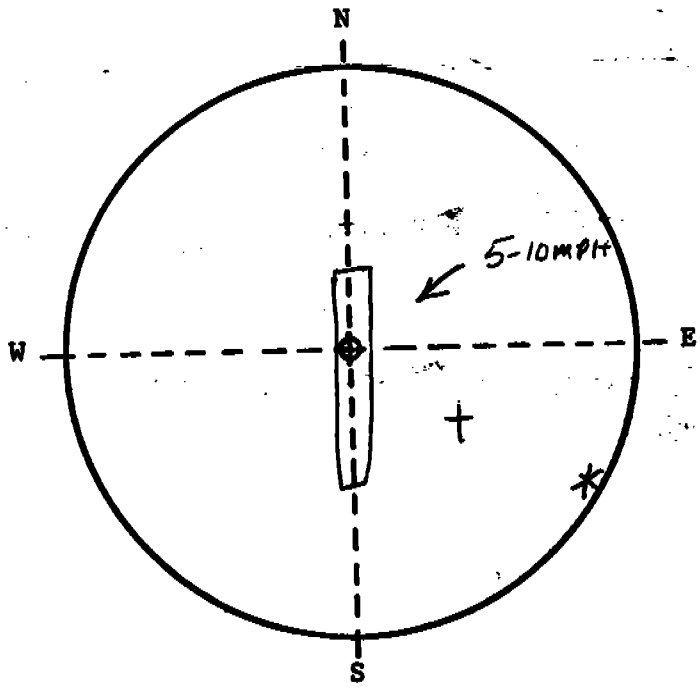

Remarks BLUE SKY

13-60

Observation Record

Observer: Norman Johnson

Location: Coke shed #3 BATT EAST

Time: Start 10:00Am End 11:00Am

Date: Dec. 29, 1982

MIN	SECONDS 0	15	30	45
0	0	0	0	0
1	0	0	0	0
2	0	0	0	0
3	0	0	0	0
4	0	0	0	0
5	0	0	0	0
6	0	0	0	0
7	0	0	0	0
8	0	0	0	0
9	0	0	0	0
10	0	0	0	0
11	0	0	0	0
12	5	5	10	5
13	5	0	0	0
14	0	0	0	0
15	0	0	0	0
16	0	0	0	0
17	0	0	0	0
18	0	0	0	0
19	0	0	0	0

CENTER OF BATT

MIN	SECONDS 0	15	30	45
20	0	0	0	0
21	0	0	0	0
22	0	0	0	0
23	0	0	0	0
24	0	0	0	0
25	0	0	0	0
26	0	0	0	0
27	0	0	0	0
28	0	0	0	0
29	0	0	0	0
30	0	0	0	0
31	0	0	0	0
32	0	0	0	0
33	0	0	0	0
34	0	0	0	0
35	0	0	0	0
36	0	0	0	0
37	0	0	0	0
38	0	0	0	0
39	0	0	0	0

DP RELIEF

MIN	SECONDS 0	15	30	45
40	0	0	0	0
41	0	0	0	0
42	0	0	0	0
43	0	0	0	0
44	0	0	0	0
45	0	0	0	0
46	0	0	0	0
47	0	0	0	0
48	0	0	0	0
49	0	0	0	0
50	0	0	0	0
51	0	0	0	0
52	0	0	0	0
53	0	0	0	0
54	0	0	0	0
55	0	0	0	0
56	0	0	0	0
57	0	0	0	0
58	0	0	0	0
59	0	0	0	0

PULLED #3 DOOR SOME EMISSIONS

CHARGIN EMISSIONS #3 OVEN

Orientation:

- ⊙ Source
- ✱ Sun
- → Wind Direction & Speed
- + Observation Point

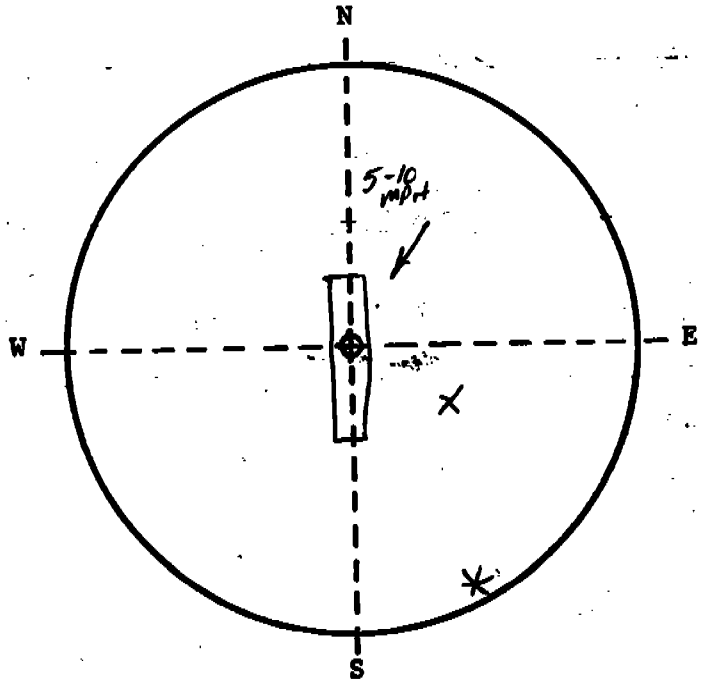

Remarks: Blue Sky

Observation Record

Zest

Observer DENNIS PHISTER

Location TOPSIDES #3 BATT. COKE SHED

Time: Start 11:00 A.M. End _____

Date 12/29/82

MIN	SECONDS 0	15	30	45
0	0	0	0	0
1	0	0	0	0
2	0	0	0	0
3	0	0	0	0
4	0	0	0	0
5	0	0	0	0
6	0	0	0	0
7	0	0	0	0
8	0	0	0	0
9	0	0	0	0
10	0	0	0	0
11	0	0	0	0
12	0	0	0	0
13	0	0	0	0
14	0	0	0	0
15	0	0	0	0
16	0	0	0	0
17	0	0	0	0
18	0	0	0	0
19	0	0	0	0

MIN	SECONDS 0	15	30	45	
20	0	0	0	0	
21	0	0	0	0	
22	0	0	0	0	
23	0	0	0	0	
24	0	0	0	0	
25	0	0	0	0	← OFFTAKE EMISSIONS SOUTH END OF BATT.
26	0	0	0	0	
27	0	0	0	0	
28	0	0	0	0	← DOOR P/S EMISSIONS
29	0	0	0	0	
30	0	0	0	0	← OFFTAKE EMISSIONS #21 c/s
31	0	0	0	0	
32	0	0	0	0	
33	0	0	0	0	
34	0	0	0	0	
35	0	0	0	0	
36	0	0	0	0	← CHARGING EMISSIONS
37	0	0	0	0	
38	0	0	0	0	
39	0	0	0	0	

MIN	SECONDS 0	15	30	45	
40	0	0	0	0	
41	0	0	0	0	
42	0	0	0	0	OFF TAKE EMISSION #23 c/s.
43	0	0	0	0	
44	0	0	0	0	
45	0	0	0	0	
46	0	0	0	0	
47	0	0	0	0	CHARGING EMISSIONS #33
48	0	0	0	0	
49	0	0	0	0	
50	0	0	0	0	
51	0	0	0	0	
52	0	0	0	0	
53	0	0	0	0	
54	0	5	5	0	← CENTER OF BATT.
55	0	0	0	0	
56	0	0	0	0	
57	0	0	0	0	
58	0	0	0	0	
59	0	0	0	0	CHARGED #43

Orientation:

- Source
- Sun
- Wind Direction & Speed N 5-10 MPH
- Observation Point

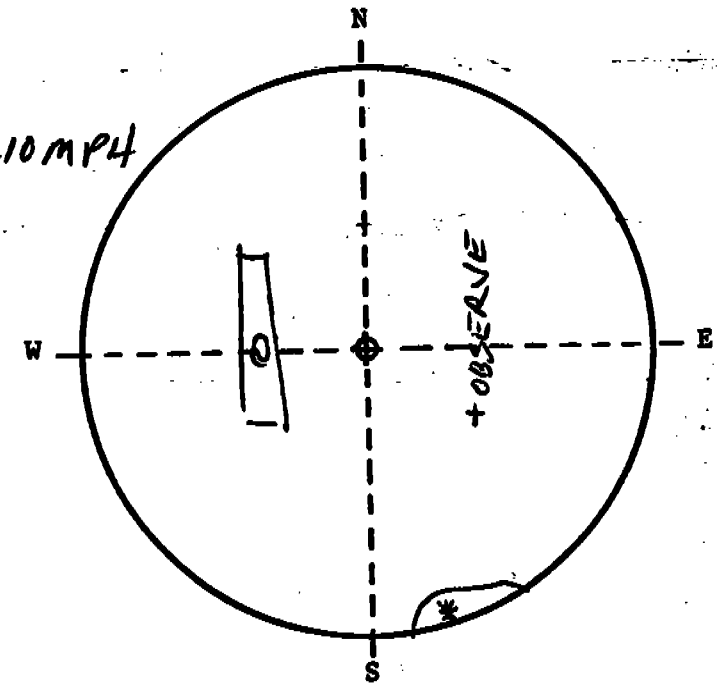

Remarks CLEAR SKY. 11:10 A.M.

Observation Record

East

Observer DENNIS PHISTER

Location TOPSIDES 3 BATT. COKE SHED

Time: Start 12:00 N. End _____

Date 12-29-82

MIN	SECONDS 0	15	30	45
0	0	0	0	0
1	0	0	0	0
2	0	0	0	0
3	0	0	0	0
4	0	0	0	0
5	0	0	0	0
6	0	0	0	0
7	0	0	0	0
8	0	0	0	0
9	0	0	0	0
10	0	0	0	0
11	0	0	0	0
12	0	0	0	0
13	0	0	0	0
14	0	0	0	0
15	0	0	0	0
16	0	0	0	0
17	0	0	0	0
18	0	0	0	0
19	0	0	0	0

MIN	SECONDS 0	15	30	45	
20	0	0	0	0	
21	0	0	0	0	
22	0	0	0	0	
23	0	0	0	0	
24	0	0	0	0	
25	0	0	0	0	
26	0	0	0	0	
27	0	0	0	0	
28	0	0	0	0	
29	0	0	0	0	
30	0	0	0	0	
31	0	0	0	0	← OFFTAKE EMISSIONS CENTER OF BATT
32	0	0	0	0	
33	0	0	0	0	
34	0	0	0	0	← PULLED DOOR-EMISSION
35	0	0	0	0	
36	0	0	0	0	← P/S
37	0	0	0	0	
38	0	0	0	0	
39	0	0	0	0	

MIN	SECONDS 0	15	30	45	
40	0	0	0	0	
41	0	0	0	0	
42	0	0	0	0	
43	0	0	0	0	
44	0	0	0	0	OFFTAKE EMISSIONS ← CENTER OF BATT.
45	0	0	0	0	
46	0	0	0	0	
47	0	0	0	0	
48	0	0	0	0	
49	0	0	0	0	
50	0	0	0	0	
51	0	0	0	0	
52	0	0	0	0	
53	0	0	0	0	
54	0	0	0	0	
55	0	0	0	0	
56	0	0	0	0	
57	0	0	0	0	
58	0	0	0	0	
59	0	0	0	0	

Orientation:

- ⊖ Source
- ✱ Sun
- → Wind Direction & Speed N- 5-10 MPH
- + Observation Point

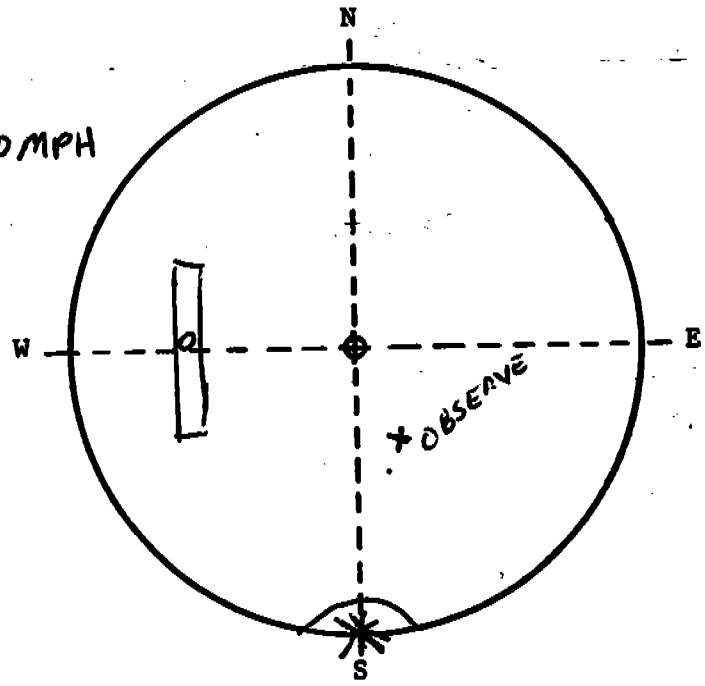

Remarks SKY PARTLY CLOUDY
12:25 P.M.

13-63

Observation Record

Observer DENNIS PHISTER

Location TOPSIDES 3 BATT. COKE SHED - EAST SIDE

Time: Start 1:00 P.M. End 2:00 P.M.

Date 12-29-82

MIN	SECONDS 0	15	30	45
0	0	0	0	0
1	0	0	0	0
2	0	0	0	0
3	0	0	0	0
4	0	0	0	0
5	0	0	0	0
6	0	0	0	0
7	0	0	0	0
8	0	0	0	0
9	0	0	0	0
10	0	0	0	0
11	0	0	0	0
12	0	0	0	5
13	0	0	0	0
14	0	0	0	0
15	0	0	0	0
16	0	0	0	0
17	0	0	0	0
18	0	0	0	0
19	0	0	0	0

SOUTH END OF BATT.

MIN	SECONDS 0	15	30	45
20	0	0	0	0
21	0	0	0	0
22	0	0	0	0
23	0	0	0	0
24	0	0	0	0
25	0	0	0	0
26	0	0	0	0
27	0	0	0	0
28	0	0	0	0
29	0	0	0	0
30	0	0	0	0
31	0	0	0	0
32	0	0	0	0
33	0	0	0	0
34	0	0	0	0
35	0	0	0	0
36	0	0	0	0
37	0	0	0	0
38	0	0	0	0
39	0	0	0	0

#5

MIN	SECONDS 0	15	30	45
40	0	0	0	0
41	0	5	0	0
42	0	0	0	0
43	0	0	0	0
44	0	0	0	0
45	0	0	0	0
46	0	0	0	0
47	0	0	0	5
48	5	0	5	0
49	0	0	0	0
50	0	0	0	0
51	0	0	0	0
52	0	0	0	0
53	0	0	0	0
54	0	0	0	0
55	0	0	0	0
56	0	0	0	0
57	0	0	0	0
58	0	0	0	0
59	0	0	0	0

#15

Orientation:

- Source
- Sun
- Wind Direction & Speed NE <10 MPH
- Observation Point

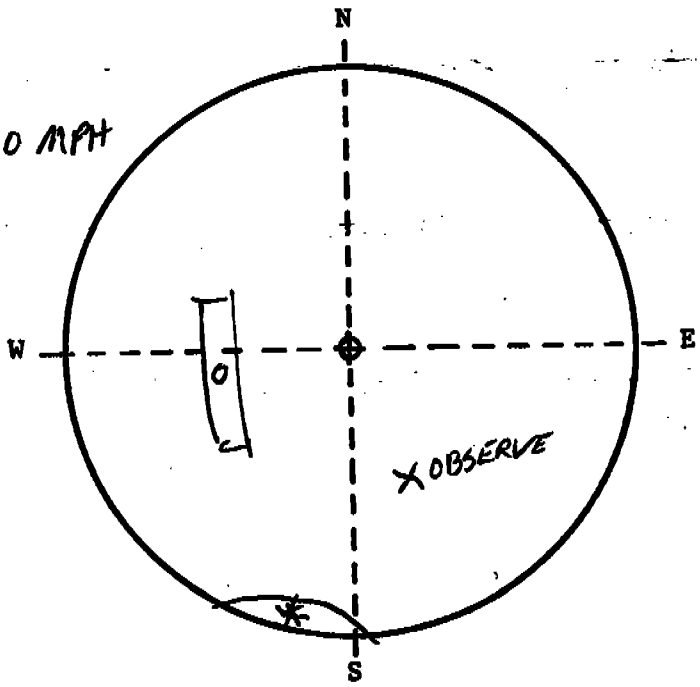

Remarks PARTLY CLOUDY SKY. OCCASIONAL TOPSIDE EMISSIONS DURING HOUR

13-64

Observation Record

East

Observer K. B. SMITH

Location COKE SHED BATTERY #3

Time: Start 2:00 PM End _____

Date DEC. 24, 1952

MIN	SECONDS 0	15	30	45
0				0
1	0	0	0	0
2	0	0	0	0
3	0	0	0	0
4	0	0	0	0
5	0	0	0	0
6	0	0	0	0
7	0	0	0	0
8	0	0	0	0
9	0	0	0	0
10	0	0	0	0
11	0	0	0	0
12	0	0	0	0
13	0	0	0	0
14	0	0	0	0
15	0	0	0	0
16	0	0	0	0
17	0	0	0	0
18	0	0	0	0
19	0	0	0	0

#25

#35

MIN	SECONDS 0	15	30	45
20	0	0	0	0
21	0	0	0	0
22	0	0	0	0
23	0	0	0	0
24	0	0	0	0
25	0	0	0	0
26	0	0	0	0
27	0	0	0	0
28	0	0	0	0
29	0	0	0	0
30	0	0	0	0
31	0	0	0	0
32	0	0	0	0
33	0	0	0	0
34	0	0	0	0
35	0	0	0	0
36	0	0	0	0
37	0	0	0	0
38	0	0	0	0
39	0	0	0	0

MIN	SECONDS 0	15	30	45
40	0	0	0	0
41	0	0	0	0
42	0	0	0	0
43	0	0	0	0
44	0	0	0	0
45	0	0	0	0
46	0	0	0	0
47	0	0	0	0
48	0	0	0	0
49	0	0	0	0
50	0	0	0	0
51	0	0	0	0
52	0	0	0	0
53	0	0	0	0
54	0	0	0	0
55	0	0	0	0
56	0	0	0	0
57	0	0	0	0
58	0	0	0	0
59	0	0	0	5

#45

Orientation:

- Source
- Sun
- Wind Direction & Speed
- Observation Point

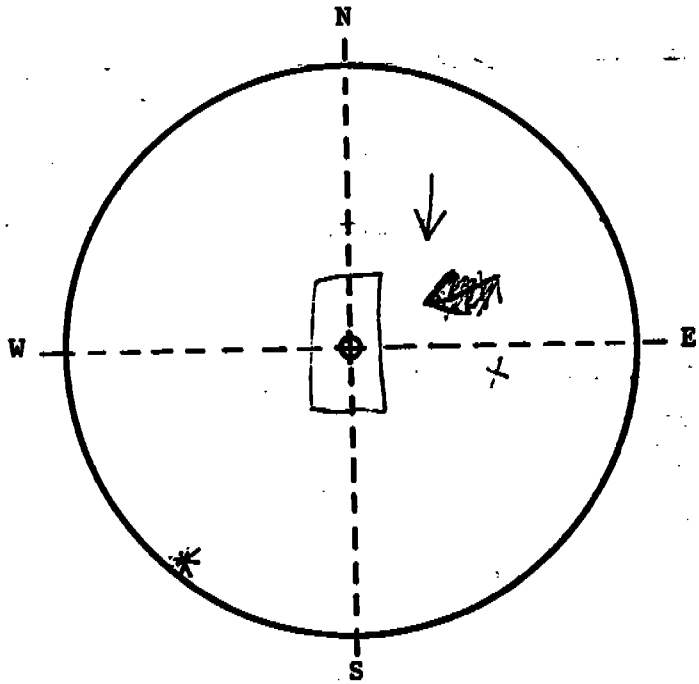

Remarks WIND 0-8

BLUE-GRAY SKY

Observation Record

Observer K. B. SMITH

Location COKE SHED BATTERY #3 EAST SIDE

Time: Start 3:00 PM End 4:00 PM

Date DEC. 29, 1982

MIN	SECONDS 0	15	30	45	
0	0	0	0	0	
1	0	0	0	0	
2	0	0	0	0	
3	0	0	0	0	
4	0	0	0	0	
5	0	0	0	0	11:55
6	0	0	0	0	
7	0	0	0	0	
8	0	0	0	0	
9	0	0	10	10	←
10	0	0	0	0	
11	0	0	0	0	
12	0	0	0	0	
13	0	0	0	0	
14	0	0	0	0	1:05
15	0	0	0	0	
16	0	0	0	0	
17	0	0	0	0	
18	0	0	0	0	
19	0	0	0	0	←

MIN	SECONDS 0	15	30	45	
20	0	0	0	0	
21	0	0	0	0	
22	0	0	0	0	
23	0	0	0	0	
24	0	0	5	5	Noon
25	0	0	0	0	
26	0	0	0	0	
27	0	0	0	0	
28	0	0	0	0	
29	0	0	0	0	
30	0	0	0	0	
31	0	0	0	0	
32	0	0	0	0	
33	0	0	0	0	
34	0	0	0	0	
35	0	0	0	0	
36	0	0	0	0	
37	0	0	0	0	
38	0	0	0	0	
39	0	0	0	0	

MIN	SECONDS 0	15	30	45
40	0	0	0	0
41	0	0	0	0
42	0	0	0	0
43	0	0	0	0
44	0	0	0	0
45	0	0	0	0
46	0	0	0	0
47	0	0	0	0
48	0	0	0	0
49	0	0	0	0
50	0	0	0	0
51	0	0	0	0
52	0	0	0	0
53	0	0	0	0
54	0	0	0	0
55	0	0	0	0
56	0	0	0	0
57	0	0	0	0
58	0	0	0	0
59	0	0	0	0

Orientation:

- ⊙ Source
- ✱ Sun
- → Wind Direction & Speed
- + Observation Point

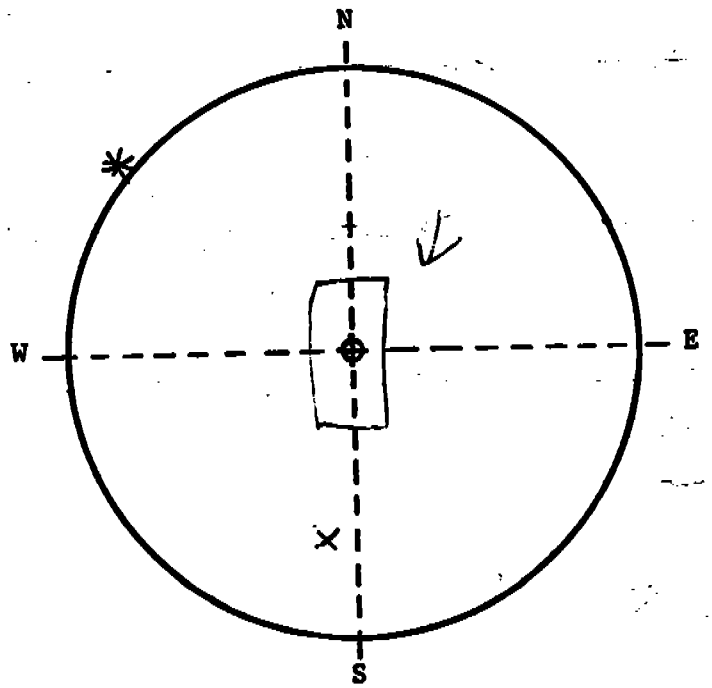

Remarks WIND 0 - 3

BLUE SKY / SOME CLOUDS

Observation Record

Observer K. A. SMITH

Location COKE SHED BATTERY #3 EAST SIDE

Time: Start 4:00 PM End 5:00 PM

Date DEC. 29, 1952

MIN	SECONDS 0	15	30	45
0	0	0	0	0
1	0	0	0	0
2	0	0	0	0
3	0	0	0	0
4	0	0	0	0
5	0	0	0	0
6	0	0	0	0
7	0	0	0	0
8	0	0	0	0
9	0	0	0	0
10	0	0	0	0
11	0	0	0	0
12	0	0	0	0
13	0	0	0	0
14	0	0	0	0
15	0	0	0	0
16	0	0	0	0
17	0	0	0	0
18	0	0	0	0
19	0	0	0	0

MIN	SECONDS 0	15	30	45
20	0	0	0	0
21	0	0	0	0
22	0	0	0	0
23	0	0	0	0
24	0	0	0	0
25	0	0	0	0
26	0	0	0	0
27	0	0	0	0
28	0	0	0	0
29	0	0	0	0
30	0	0	0	0
31	0	0	0	0
32	0	0	0	0
33	0	0	0	0
34	0	0	0	0
35	0	0	0	0
36	0	0	0	0
37	0	0	0	0
38	0	0	0	0
39	0	0	0	0

MIN	SECONDS 0	15	30	45
40	0	0	0	0
41	0	0	0	0
42	0	0	0	0
43	0	0	0	0
44	0	0	0	0
45	0	0	0	0
46	0	0	0	0
47	0	0	0	0
48	0	0	0	0
49	0	0	0	0
50	0	0	0	0
51	0	0	0	0
52	0	0	0	0
53	0	0	0	0
54	0	0	0	0
55	0	0	0	0
56	0	0	0	0
57	0	0	0	0
58	0	0	0	0
59	0	0	0	0

#7

Orientation:

- Source
- Sun
- Wind Direction & Speed
- Observation Point

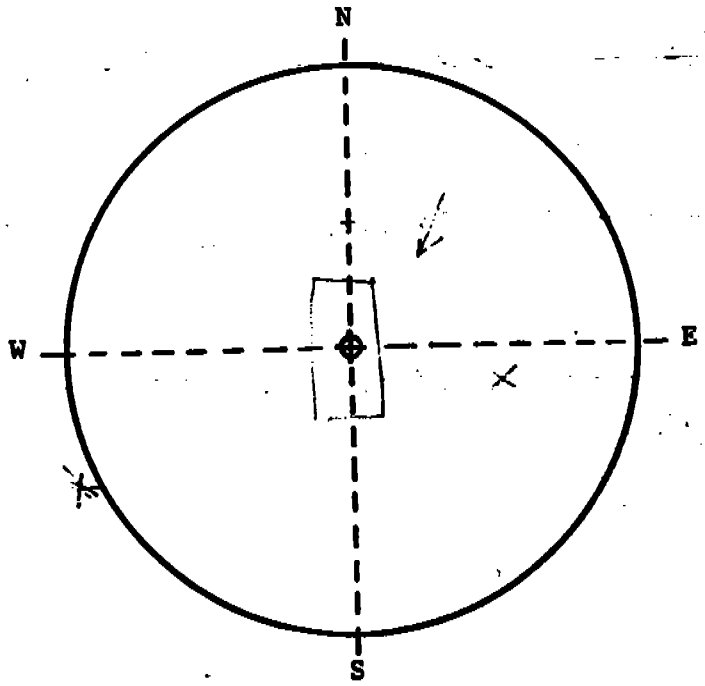

Remarks WIND 0-5

CLR. SKY/CLOUDS

Observation Record

Observer K. B. SMITH

Location COKE SHED BATTERY #4 WEST SIDE

Time: Start 8:00 AM End 9:00 AM

Date DEC. 29, 1982

MIN	SECONDS 0	15	30	45
0	0	0	0	0
1	0	0	0	0
2	0	0	0	0
3	0	0	0	0
4	0	0	0	0
5	0	0	0	0
6	5	0	0	0
7	0	0	0	0
8	0	0	0	0
9	0	0	0	0
10	0	0	0	0
11	0	0	0	0
12	0	0	0	0
13	0	0	0	0
14	0	0	0	0
15	0	0	0	0
16	0	0	0	0
17	0	0	0	0
18	0	0	0	0
19	0	0	0	0

MIN	SECONDS 0	15	30	45
20	0	0	0	0
21	0	0	0	0
22	0	0	0	0
23	0	0	0	0
24	0	0	0	0
25	0	0	0	0
26	0	0	0	0
27	0	0	0	0
28	0	0	0	0
29	0	0	0	0
30	0	0	0	0
31	0	0	0	0
32	0	0	0	0
33	0	0	0	0
34	0	0	0	0
35	0	0	0	0
36	0	0	0	0
37	0	0	0	0
38	0	0	0	0
39	0	0	0	0

MIN	SECONDS 0	15	30	45
40	0	0	0	0
41	0	0	0	0
42	0	0	0	0
43	5	5	0	0
44	0	0	0	0
45	0	0	0	0
46	0	0	0	0
47	5	0	0	0
48	0	0	0	0
49	0	0	0	0
50	0	0	0	0
51	0	0	0	0
52	0	0	5	10
53	0	0	0	0
54	0	0	0	0
55	0	0	5	0
56	0	5	0	0
57	0	0	0	0
58	0	0	0	0
59	0	0	0	0

Orientation:

- Source
- Sun
- Wind Direction & Speed
- Observation Point

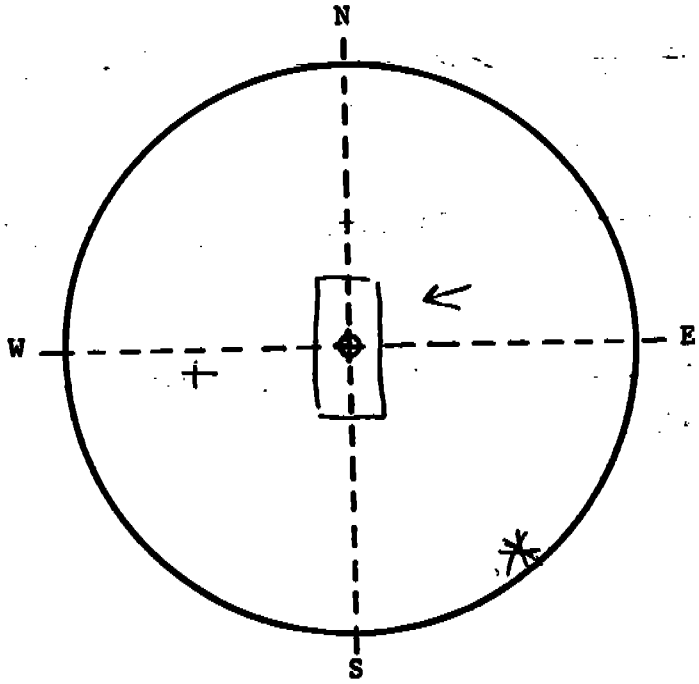

Remarks WIND C - 3

BLUE SKY

P 1

13-68

Observation Record

Observer K. B. SMITH **Location** COKE SHED BATTERY #4 WEST SIDE

Time: Start 9:00 AM **End** 10:00 **Date** DEC. 29, 1952

MIN	SECONDS 0	15	30	45
0	0	0	0	0
1	0	0	0	0
2	0	0	0	0
3	0	0	0	0
4	0	0	0	0
5	0	0	0	0
6	0	0	0	10
7	10	10	10	10
8	0	0	0	0
9	0	0	0	0
10	0	0	0	0
11	0	0	0	0
12	0	0	0	0
13	0	0	0	0
14	0	0	0	0
15	0	0	0	0
16	0	0	0	0
17	0	0	0	0
18	0	0	0	0
19	0	0	0	0

NORTH END

MIN	SECONDS 0	15	30	45
20	0	0	0	0
21	0	0	0	0
22	0	0	0	0
23	0	0	0	0
24	0	0	0	0
25	0	0	0	0
26	0	0	0	0
27	0	0	0	0
28	0	0	0	0
29	0	0	0	0
30	0	0	0	0
31	0	0	0	0
32	0	0	0	0
33	0	0	0	5
34	10	10	10	10
35	5	5	0	0
36	0	0	0	0
37	0	0	0	0
38	0	0	0	0
39	0	0	0	0

Change of observers. (Newell Kirkton)

MIN	SECONDS 0	15	30	45
40	0	0	0	5
41	5	5	5	0
42	0	0	0	0
43	0	0	0	0
44	0	0	0	0
45	0	0	0	0
46	0	0	0	5
47	5	0	5	0
48	0	0	0	0
49	0	0	0	0
50	0	0	0	0
51	0	0	0	0
52	0	0	0	5
53	5	5	5	5
54	5	0	0	0
55	0	0	0	0
56	0	0	0	0
57	0	0	0	0
58	0	0	0	0
59	0	0	0	0

Orientation:

- Source
- Sun
- Wind Direction & Speed
- Observation Point

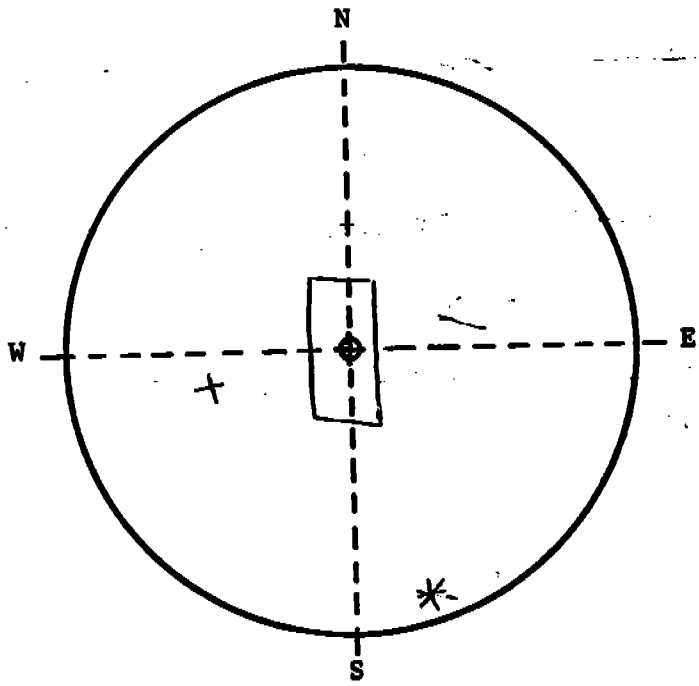

Remarks WIND 0 3

P 2

13-69

Observation Record

Observer Newell Kitchen

Location #4 Battery Shed - Coke Plant - West

Time: Start 10:00 End 11:00

Date 29 Dec '82

MIN	SECONDS 0	15	30	45
0	0	0	0	0
1	0	0	0	0
2	0	0	0	0
3	0	0	0	0
4	0	0	0	0
5	0	0	0	0
6	0	0	0	0
7	0	0	0	0
8	0	0	0	0
9	0	0	0	0
10	0	0	0	0
11	0	0	0	0
12	0	0	0	0
13	0	0	0	0
14	0	0	0	0
15	0	0	0	0
16	0	0	0	0
17	0	0	0	0
18	0	0	0	0
19	0	0	0	0

MIN	SECONDS 0	15	30	45
20	0	0	0	0
21	0	0	0	0
22	0	0	0	0
23	0	0	0	0
24	0	0	0	0
25	0	0	0	0
26	0	0	0	0
27	0	0	0	0
28	0	0	0	0
29	0	0	0	0
30	0	0	0	0
31	0	0	0	0
32	0	0	0	0
33	0	0	0	0
34	0	0	0	0
35	0	0	0	0
36	0	0	0	0
37	0	0	0	0
38	0	0	0	0
39	0	0	0	0

MIN	SECONDS 0	15	30	45
40	0	0	0	0
41	0	0	0	0
42	0	0	0	0
43	0	0	0	0
44	0	0	0	0
45	0	0	0	0
46	0	0	0	0
47	0	0	0	0
48	0	0	0	0
49	0	0	0	0
50	0	0	0	0
51	0	0	0	0
52	0	0	0	0
53	0	0	0	0
54	0	0	0	0
55	0	0	0	0
56	0	0	0	0
57	0	0	0	0
58	0	0	0	0
59	0	0	0	0

Orientation:

- Source
- Sun
- Wind Direction & Speed
- Observation Point

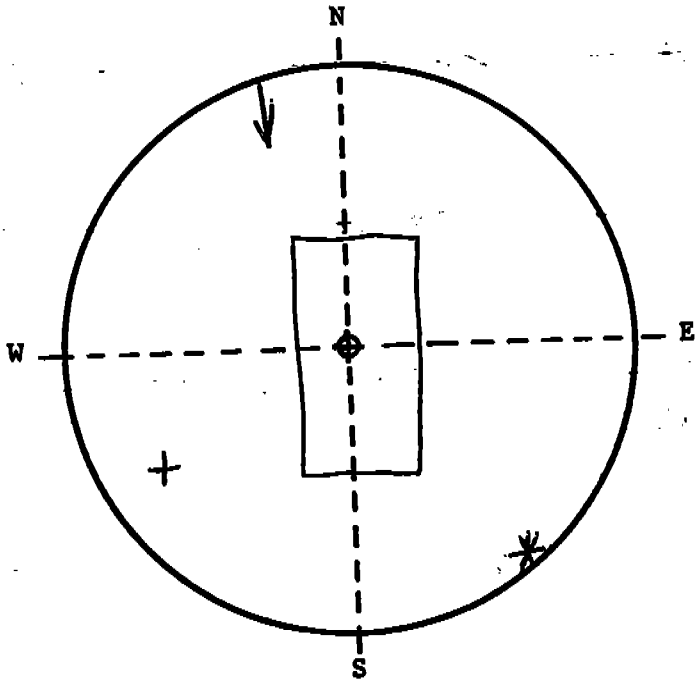

Remarks Wind: 05 mph
Clear skies

P 3

13-70

Observation Record

Observer Newell Kithen

Location #4 Battery Shed-Coke oven west

Time: Start 11:00 End 12:00

Date 29 Dec. 82

MIN	SECONDS 0	15	30	45
0	0	0	0	0
1	0	0	0	0
2	0	0	0	0
3	0	0	0	0
4	0	0	0	0
5	0	0	0	0
6	0	0	0	0
7	0	0	0	0
8	0	0	0	0
9	0	0	0	0
10	0	0	0	0
11	0	0	0	0
12	0	0	0	5
13	0	0	0	0
14	0	0	0	0
15	0	0	0	0
16	0	0	0	0
17	0	0	0	0
18	0	0	0	0
19	0	0	0	0

MIN	SECONDS 0	15	30	45
20	0	0	0	0
21	0	0	0	0
22	0	0	0	0
23	0	0	0	0
24	0	0	0	0
25	0	0	0	0
26	0	0	0	0
27	0	0	0	0
28	0	0	0	0
29	0	0	0	0
30	0	0	0	0
31	0	0	0	0
32	0	0	0	0
33	0	0	0	0
34	0	0	0	0
35	0	0	0	0
36	0	0	0	0
37	0	0	0	0
38	0	0	0	0
39	0	0	0	0

MIN	SECONDS 0	15	30	45
40	0	0	0	0
41	0	0	0	0
42	0	0	0	0
43	0	0	0	0
44	0	0	0	0
45	0	0	0	0
46	0	0	0	0
47	0	0	0	0
48	0	0	0	0
49	0	0	0	0
50	0	0	0	0
51	0	0	0	0
52	0	0	0	0
53	0	0	0	0
54	0	0	0	0
55	0	0	0	0
56	0	0	0	0
57	0	0	0	0
58	0	0	0	0
59	0	0	0	0

Orientation:

- ⊙ Source
- ✱ Sun
- → Wind Direction & Speed
- + Observation Point

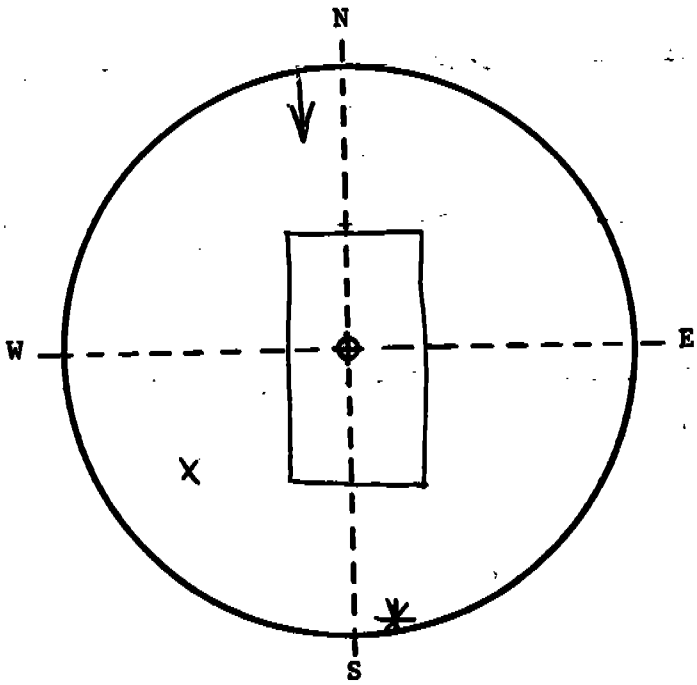

Remarks Wind: 0-5 mph
Clear Skies

P4

13-71

Observation Record

Observer Newell Kitchen

Location #4 Battery Shed - Coke Plant west

Time: Start 1200 noon End 13:00

Date 29 Dec. 82

MIN	SECONDS 0	15	30	45
0	0	0	0	0
1	0	0	0	0
2	0	0	0	0
3	0	0	0	0
4	0	0	0	0
5	0	0	0	0
6	0	0	0	0
7	0	0	0	0
8	0	0	0	0
9	0	0	0	0
10	0	0	0	0
11	0	0	0	0
12	0	0	0	0
13	0	0	0	0
14	0	0	0	0
15	0	0	0	0
16	0	0	0	0
17	0	0	0	0
18	0	0	0	0
19	0	0	0	0

S.M. Reading now

MIN	SECONDS 0	15	30	45
20	0	0	0	0
21	0	0	0	0
22	0	0	0	0
23	0	0	0	0
24	0	0	0	0
25	0	0	0	0
26	0	0	0	0
27	0	0	0	0
28	0	0	0	0
29	0	0	0	0
30	0	0	0	0
31	0	0	0	0
32	0	0	0	0
33	0	0	0	0
34	0	0	0	0
35	0	0	0	0
36	0	0	0	0
37	0	0	0	0
38	0	0	0	0
39	0	0	0	0

MIN	SECONDS 0	15	30	45
40	0	0	0	0
41	0	0	0	0
42	0	0	0	0
43	0	0	0	0
44	0	0	0	0
45	0	0	0	0
46	0	0	0	0
47	0	0	0	0
48	0	0	0	0
49	0	0	0	0
50	0	0	0	0
51	0	0	0	0
52	0	0	0	0
53	0	0	0	0
54	0	0	0	0
55	0	0	0	0
56	0	0	0	0
57	0	0	0	0
58	0	0	0	0
59	0	0	0	0

Orientation:

- ⊖ Source
- ✱ Sun
- → Wind Direction & Speed
- + Observation Point

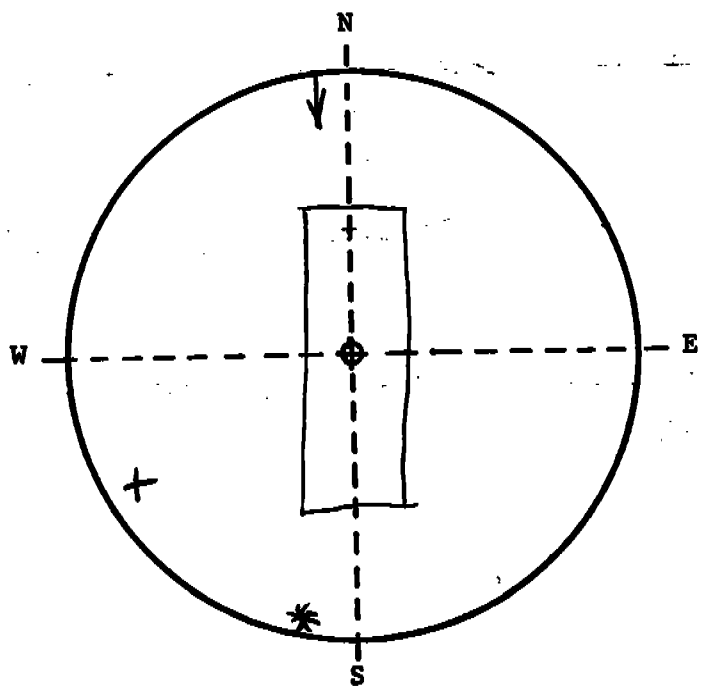

Remarks Wind: 0-5 mph

skies clear & blue

P 5

13-72

Observation Record

Observer Susan Ferguson

Location #4 battery shed - Coke Plant

Time: Start 1:00 pm End 2:00pm

Date Dec 29, 1987

MIN	SECONDS 0	15	30	45
0				
1				
2				
3				
4				
5				
6				
7				
8				
9				
10				
11				
12				
13				
14				
15				
16				
17				
18				
19				

MIN	SECONDS 0	15	30	45
20				
21				
22				
23				
24				
25				
26				
27				
28				
29				
30				
31				
32				
33				
34				
35				
36				
37				
38				
39				

MIN	SECONDS 0	15	30	45
40				
41				
42				
43				
44				
45				
46				
47				
48				
49				
50				
51				
52				
53				
54				
55				
56				
57				
58				
59				

Orientation:

- Source
- Sun
- Wind Direction & Speed
- Observation Point

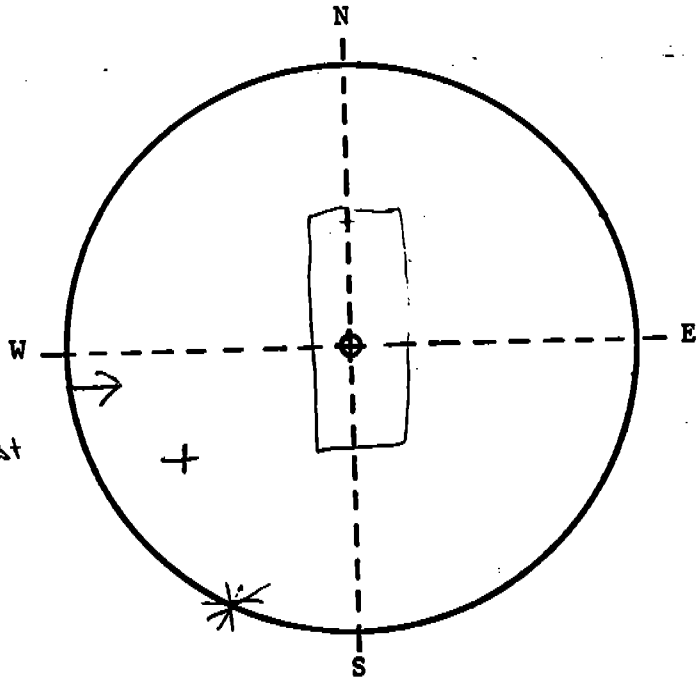

Remarks Wind: 0-5 mph from the west

Background: Roof top & Blue sky

Distance from source: 100'-300'

Source height: 75' (Approx)

West

Observation Record

Observer Susan Ferguson

Location #4 battery shed - Coke Plant

Time: Start 2:00 pm End 3:00 pm

Date Dec. 29, 1982

MIN	SECONDS			
	0	15	30	45
0	0	0	0	0
1	0	0	0	0
2	0	0	0	0
3	0	0	0	0
4	0	0	0	0
5	0	0	0	0
6	0	0	0	0
7	0	0	0	0
8	0	0	0	0
9	0	0	0	0
10	0	0	0	0
11	0	0	0	0
12	0	0	0	0
13	0	0	0	0
14	0	0	0	0
15	0	0	0	0
16	0	0	0	0
17	0	0	0	0
18	0	0	0	0
19	0	0	0	0

MIN	SECONDS			
	0	15	30	45
20	0	0	0	0
21	0	0	0	0
22	0	0	0	0
23	0	0	0	0
24	0	0	0	0
25	0	0	0	0
26	0	0	0	0
27	0	0	0	0
28	0	0	0	0
29	0	0	0	0
30	0	0	0	0
31	0	0	0	0
32	0	0	0	0
33	0	0	0	0
34	0	0	0	0
35	0	0	0	0
36	0	0	0	0
37	0	0	0	0
38	0	0	0	0
39	0	0	0	0

MIN	SECONDS			
	0	15	30	45
40	0	0	0	0
41	0	0	0	0
42	0	0	0	0
43	0	0	0	0
44	0	0	0	0
45	0	0	0	0
46	0	0	0	0
47	0	0	0	0
48	0	0	0	0
49	0	0	0	0
50	0	0	0	0
51	0	0	0	0
52	0	0	0	0
53	0	0	0	0
54	0	0	0	0
55	0	0	0	0
56	0	0	0	0
57	0	0	0	0
58	0	0	0	0
59	0	0	0	0

Orientation:

- o Source
- ✱ Sun
- → Wind Direction & Speed
- + Observation Point

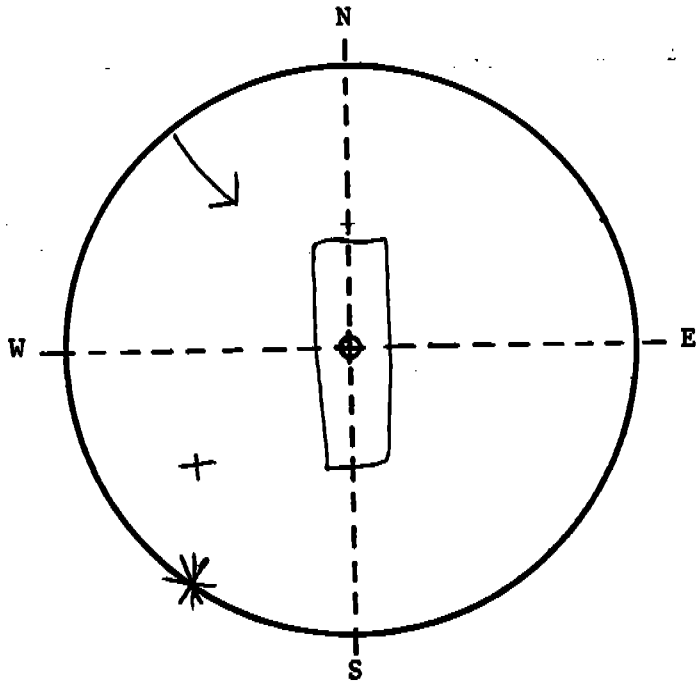

Remarks Background: Roof top & blue sky

wind: 0-5 mph from the NW

Distance from source: 100'-200'

Source height: 75' (Approx)

PM

Observation Record

NOS +

Observer Susan Ferguson

Location #4 battery Shed - Coke Plant

Time: Start 3:00 End 4:00

Date Dec 29, 1982

MIN	SECONDS 0	15	30	45
0	0	0	0	0
1	0	0	0	0
2	0	0	0	0
3	0	0	0	0
4	0	0	0	0
5	0	0	0	0
6	0	0	0	0
7	0	0	0	0
8	0	0	0	0
9	0	0	0	5
10	5	5	0	0
11	0	0	0	0
12	0	0	0	0
13	0	0	0	0
14	0	0	0	0
15	0	0	0	0
16	0	0	0	0
17	0	0	0	0
18	0	0	0	0
19	0	0	—	—

MIN	SECONDS 0	15	30	45
20	—	—	—	—
21	—	0	0	—
22	—	—	—	—
23	—	0	0	0
24	0	0	0	0
25	0	0	0	0
26	0	0	0	0
27	0	0	0	0
28	0	0	0	0
29	0	0	—	—
30	—	0	0	0
31	0	0	0	0
32	0	0	0	0
33	0	0	0	0
34	0	0	0	0
35	0	0	0	—
36	—	—	0	0
37	0	0	0	0
38	0	0	0	0
39	0	0	0	—

MIN	SECONDS 0	15	30	45
40	—	—	—	—
41	—	0	—	—
42	—	—	0	—
43	—	—	0	0
44	0	0	0	0
45	0	0	0	0
46	0	0	0	0
47	0	0	0	0
48	0	0	0	0
49	0	0	0	0
50	0	0	0	0
51	0	0	0	0
52	0	0	0	0
53	0	0	0	0
54	0	0	0	0
55	0	0	0	0
56	0	0	0	0
57	0	0	0	0
58	0	0	0	0
59	0	0	0	0

Orientation:

- o Source
- ✱ Sun
- → Wind Direction & Speed
- + Observation Point
- — view blocked by steam

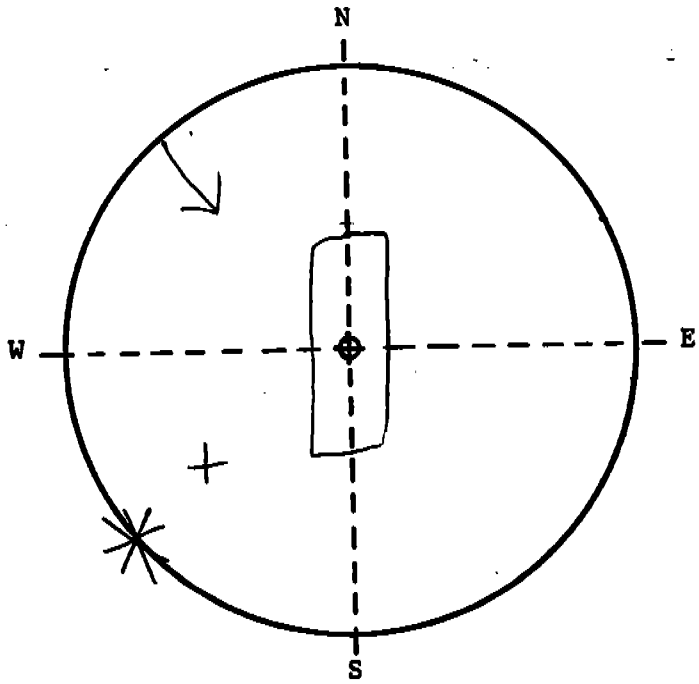

Remarks Background: Roof top & blue sky

wind: 0-5 mph from N.W.

Distance from Source 100-200'

Source height 75' approx

Q8

Observation Record

Observer Susan Ferguson

Location #4 battery shed - Coke plant West

Time: Start 4:00pm End 5:00pm

Date Dec. 29, 1982

MIN	SECONDS 0	15	30	45
0	0	0	0	0
1	0	0	0	0
2	0	0	0	0
3	0	0	0	0
4	0	0	0	0
5	0	0	0	0
6	0	0	0	0
7	0	0	0	0
8	0	0	0	0
9	0	0	0	0
10	0	0	0	0
11	0	0	0	0
12	0	0	0	0
13	0	0	0	0
14	0	0	0	0
15	0	0	0	0
16	0	0	0	0
17	0	0	0	0
18	5	5	0	0
19	0	0	0	0

MIN	SECONDS 0	15	30	45
20	0	0	0	0
21	0	0	0	0
22	0	0	0	0
23	0	0	0	0
24	0	0	0	0
25	0	0	0	0
26	0	0	0	0
27	0	0	0	0
28	0	0	0	0
29	0	0	0	0
30	0	0	0	0
31	0	0	0	0
32	0	0	0	0
33	0	0	0	0
34	0	0	0	0
35	0	0	0	0
36	0	0	0	0
37	0	0	0	0
38	0	0	0	0
39	0	0	0	0

MIN	SECONDS 0	15	30	45
40	0	0	0	0
41	0	0	0	0
42	0	0	0	0
43	0	0	0	0
44	0	0	0	0
45	0	0	0	0
46	0	0	0	0
47	0	0	0	1
48	—	—	—	—
49	—	—	—	0
50	0	0	0	0
51	0	0	0	0
52	0	0	0	0
53	0	0	0	0
54	0	0	0	0
55	0	0	0	0
56	0	0	0	0
57	0	0	0	0
58	0	0	0	0
59	0	0	0	0

Orientation:

- ⊖ Source
- ✱ Sun
- → Wind Direction & Speed
- + Observation Point
- — View block by steam

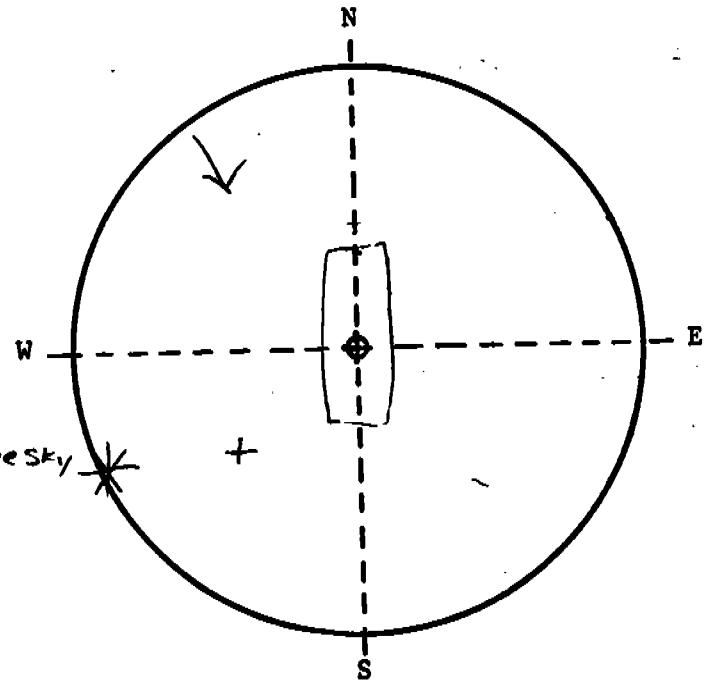

Remarks Background: Roof top & Mostly blue sky

Wind: 0-5 mph from the NW

Distance from source: 100'-200'

Source height: 75'

13-76

P 9

EAST

Observation Record

Observer DENNIS PHISTER

Location TOPSIDES 4 BATT. COKE SHED

Time: Start 8:00 A.M. End _____

Date 12-29-82

MIN	SECONDS 0	15	30	45
0	0	0	0	0
1	0	0	0	0
2	0	0	0	0
3	0	0	0	0
4	0	0	0	0
5	0	0	0	0
6	0	0	0	0
7	0	0	0	0
8	0	0	0	0
9	0	0	0	0
10	0	0	0	0
11	0	0	0	0
12	0	0	0	0
13	0	0	0	0
14	0	0	0	0
15	0	0	0	0
16	0	0	0	0
17	0	0	0	0
18	0	0	0	0
19	0	0	0	0

QUENCH STEAM FROM WHARF

MIN	SECONDS 0	15	30	45
20	0	0	0	0
21	0	0	0	0
22	0	0	0	0
23	0	0	0	0
24	0	0	0	0
25	0	0	0	0
26	0	0	0	0
27	0	0	0	0
28	0	0	0	0
29	0	0	0	0
30	0	0	0	0
31	0	0	0	0
32	0	0	0	0
33	0	0	0	0
34	0	0	0	0
35	0	0	0	0
36	0	0	0	0
37	0	0	0	0
38	0	0	0	0
39	0	0	0	0

CHARGING EMISSIONS

MIN	SECONDS 0	15	30	45
40	0	0	0	0
41	0	0	0	0
42	0	0	0	0
43	0	0	0	0
44	0	0	0	0
45	0	0	0	0
46	0	0	0	0
47	0	0	0	0
48	0	0	0	0
49	0	0	0	0
50	0	0	0	0
51	0	0	0	0
52	0	0	0	0
53	0	0	0	0
54	0	0	0	0
55	0	0	0	0
56	0	0	0	0
57	0	0	0	0
58	0	0	0	0
59	0	0	0	0

Orientation:

- o Source
- ✱ Sun
- → Wind Direction & Speed NE <5 MPH
- + Observation Point

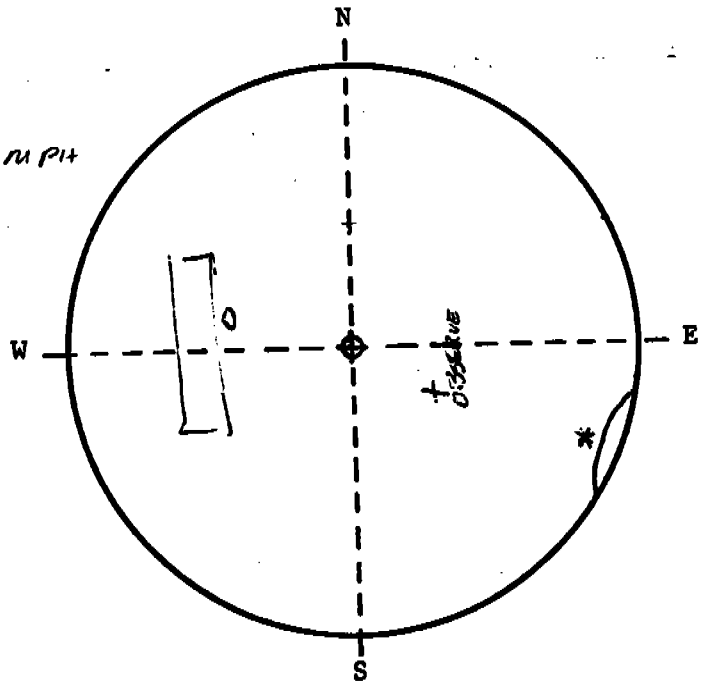

Remarks 8:05 A.M. CLEAR SKIES

Observation Record

East

Observer DENNIS PHISTER

Location TOPSIDES 4 BATT. COKESHED.

Time: Start 9:00 A.M. End [illegible]

Date 12-29-82

MIN	SECONDS 0	15	30	45
0	0	0	0	0
1	0	0	0	0
2	0	0	0	0
3	0	0	0	0
4	0	0	0	0
5	0	0	0	0
6	0	0	0	0
7	0	0	0	0
8	0	0	0	0
9	0	0	0	0
10	0	0	0	0
11	0	0	0	0
12	0	0	0	0
13	0	0	0	0
14	0	0	0	0
15	0	0	0	0
16	0	0	0	0
17	0	0	0	0
18	0	0	0	0
19	0	0	0	0

OUTBUILT STEAM FROM NORTH END.

MIN	SECONDS 0	15	30	45
20	0	0	0	0
21	0	0	0	0
22	0	0	0	0
23	0	0	0	0
24	0	0	0	0
25	0	0	0	0
26	0	0	0	0
27	0	0	0	0
28	0	0	0	0
29	0	0	0	0
30	0	0	0	0
31	0	0	0	0
32	0	0	0	0
33	0	0	0	0
34	0	0	0	0
35	0	0	0	0
36	0	0	0	0
37	0	0	0	0
38	0	0	0	0
39	0	0	0	0

STEAM BETWEEN 3-4 BATT.

CHARGING EMISSIONS #4

MIN	SECONDS 0	15	30	45
40	0	0	0	0
41	0	0	0	0
42	0	0	0	0
43	0	0	0	0
44	0	0	0	0
45	0	0	0	0
46	0	0	0	0
47	0	0	0	0
48	0	0	0	0
49	0	0	0	0
50	0	0	0	0
51	0	0	0	0
52	0	0	0	0
53	0	0	0	0
54	0	0	0	0
55	0	0	0	0
56	0	0	0	0
57	0	0	0	0
58	0	0	0	0
59	0	0	0	0

14 MISSED

Orientation:

- Source
- Sun
- Wind Direction & Speed NE < 5 MPH
- Observation Point

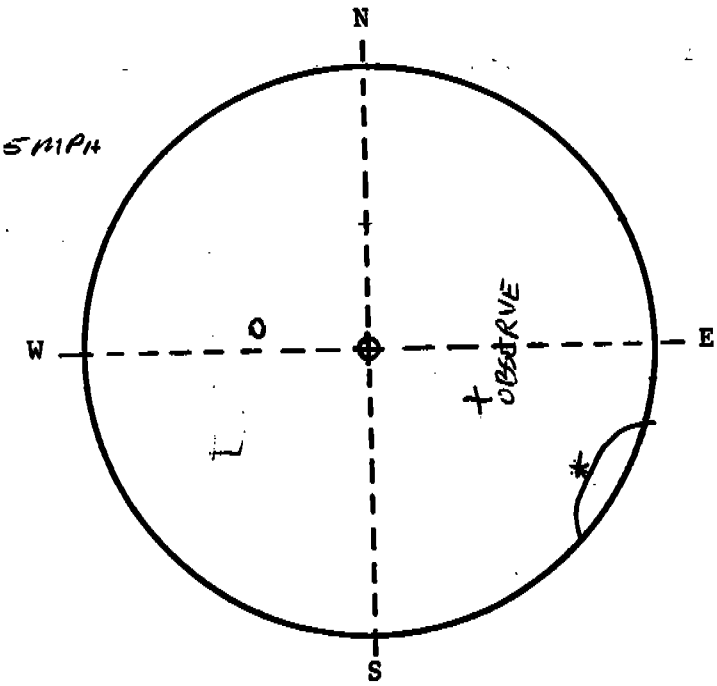

Remarks 9:08 A.M. CLEAR SKIES

13-78

Observation Record

Observer _____ Location _____

Time: Start _____ End _____ Date _____

MIN	SECONDS			
	0	15	30	45
0				
1				
2				
3				
4				
5				
6				
7				
8				
9				
10				
11				
12				
13				
14				
15				
16				
17				
18				
19				

MIN	SECONDS			
	0	15	30	45
20				
21				
22				
23				
24				
25				
26				
27				
28				
29				
30				
31				
32				
33				
34				
35				
36				
37				
38				
39				

MIN	SECONDS			
	0	15	30	45
40				
41				
42				
43				
44				
45				
46				
47				
48				
49				
50				
51				
52				
53				
54				
55				
56				
57				
58				
59				

Orientation:

- o Source
- ✱ Sun
- → Wind Direction & Speed
- + Observation Point

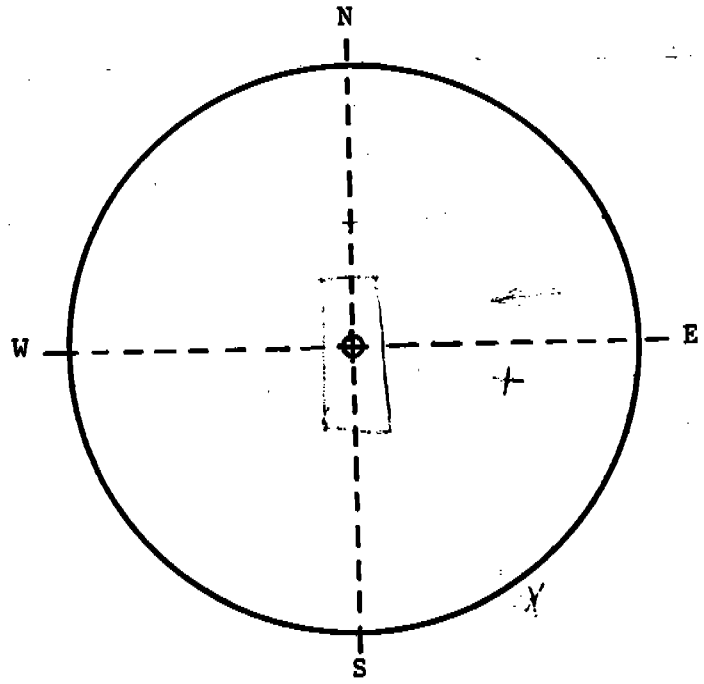

Remarks _____

13-79

Observation Record

Observer L. B. SMITH **Location** CONE SPEN BATTERY BY [illegible]

Time: Start 11:00 A.M. **End** 12:00 **Date** DEC. 29, 1982

MIN	SECONDS 0	15	30	45
0	0	0	0	0
1	0	0	0	0
2	0	0	0	0
3	0	0	0	0
4	5	0	0	0
5	0	0	0	0
6	0	0	0	0
7	0	0	0	0
8	0	0	0	0
9	0	0	0	0
10	0	0	0	0
11	0	0	0	0
12	0	0	0	0
13	0	0	0	0
14	0	0	0	0
15	0	0	0	0
16	0	0	0	0
17	0	0	0	0
18	0	0	0	0
19	0	0	0	0

MIN	SECONDS 0	15	30	45
20	0	0	0	0
21	0	0	0	0
22	0	0	0	0
23	0	0	0	0
24	0	0	0	0
25	0	0	0	0
26	0	0	0	0
27	0	0	0	0
28	0	0	0	0
29	0	0	0	0
30	0	0	0	0
31	0	0	0	0
32	0		0	0
33	0	0	0	0
34	0	0	0	0
35	0	0	0	0
36	0	0	0	0
37	0	0	0	0
38	0	0	0	0
39	0	0	0	0

MIN	SECONDS 0	15	30	45
40	0	0	0	0
41	0	0	0	0
42	0	0	0	0
43	0	0	0	0
44	0	0	0	0
45	0	0	0	0
46	0	0	0	0
47	0	0	0	0
48	0	0	0	0
49	0	0	0	0
50	0	0	0	0
51	0	0	0	0
52	0	0	0	0
53	0	0	0	0
54	0	0	0	0
55	0	0	0	0
56	0	0	0	0
57	0	0	0	0
58	0	0	0	0
59	0	0	0	0

Orientation:

- Source
- Sun
- Wind Direction & Speed
- Observation Point

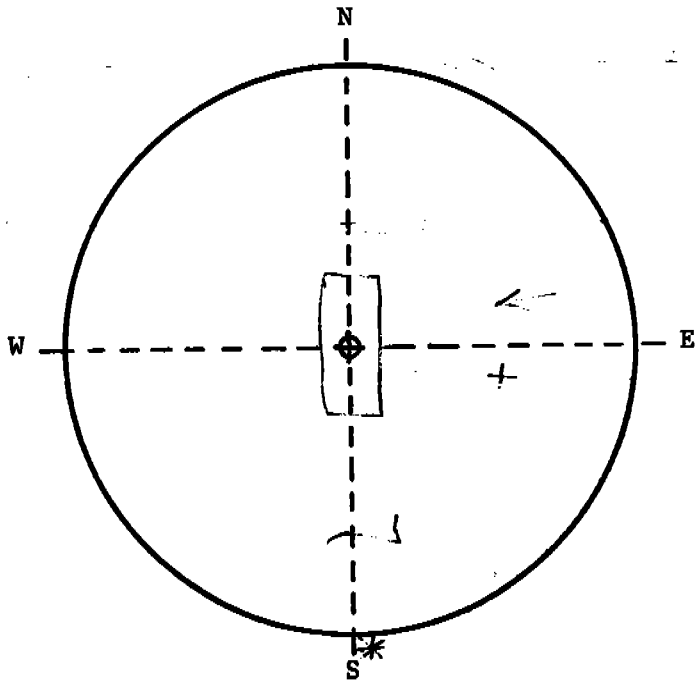

Remarks WIND 0 - 3

BLUE - GRAY SKY

13-80

Observation Record

Observer [illegible] Location [illegible]

Time: Start [illegible] End [illegible] Date [illegible]

MIN	SECONDS 0	15	30	45
0	0	0	0	0
1	0	0	0	0
2	0	0	0	0
3	0	0	0	0
4	0	5	0	0
5	0	0	0	0
6	0	0	0	0
7	0	0	0	0
8	0	0	0	0
9	0	0	0	0
10	0	0	0	0
11	0	0	0	0
12	0	0	0	0
13	0	0	0	0
14	0	0	0	0
15	0	0	0	0
16	0	0	0	0
17	0	0	0	0
18	0	0	0	0
19	0	0	0	0

MIN	SECONDS 0	15	30	45
20	0	0	0	0
21	0	0	0	0
22	0	0	0	0
23	0	0	0	0
24	0	0	0	0
25	0	0	0	0
26	0	0	0	0
27	0	0	0	0
28	0	0	0	0
29	0	0	0	0
30	0	0	0	0
31	0	0	0	0
32	0	0	0	0
33	0	0	0	0
34	0	0	0	0
35	0	0	0	0
36	0	0	0	0
37	0	0	0	0
38	0	0	0	0
39	0	0	0	0

NBJ

MIN	SECONDS 0	15	30	45
40	0	0	0	0
41	0	0	0	0
42	0	0	0	0
43	0	0	0	0
44	0	0	0	0
45	0	0	0	0
46	0	0	0	0
47	0	0	0	0
48	0	0	0	0
49	0	0	0	0
50	0	0	0	0
51	0	0	0	0
52	0	0	0	0
53	0	0	0	0
54	0	0	0	0
55	0	0	0	0
56	0	0	0	5
57	5	5	5	5
58	0	0	0	0
59	0	0	0	0

SOUTH CROSS OVER

Orientation:

- ⊙ Source
- ✱ Sun
- → Wind Direction & Speed
- + Observation Point

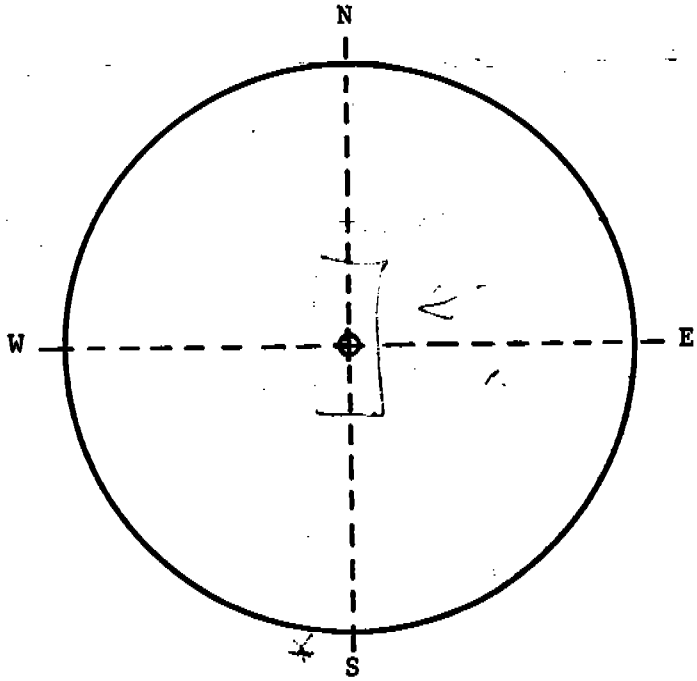

Remarks WIND [illegible]

[illegible] GRAY SKY

13-81

Observation Record

Observer Norman Johnson

Location Coke Shed #4 Batt East side

Time: Start 1:00 PM End 2:00 PM

Date Dec. 29, 1982

MIN	SECONDS 0	15	30	45
0	0	0	0	0
1	0	0	0	0
2	0	0	0	0
3	0	0	0	0
4	0	0	0	0
5	0	0	0	0
6	0	0	0	0
7	0	0	0	0
8	0	0	0	0
9	0	0	0	0
10	0	0	0	0
11	0	0	0	0
12	0	0	0	0
13	0	0	0	0
14	0	0	0	0
15	0	0	0	0
16	0	0	0	0
17	0	0	0	0
18	0	0	0	0
19	0	0	0	0

MIN	SECONDS 0	15	30	45
20	0	0	0	0
21	0	0	0	0
22	0	0	0	0
23	0	0	0	0
24	0	0	0	0
25	0	0	0	0
26	0	0	0	0
27	0	0	0	0
28	0	0	0	0
29	0	0	0	0
30	0	0	0	0
31	0	0	0	0
32	0	0	0	0
33	0	0	0	0
34	0	0	0	0
35	0	0	0	0
36	0	0	0	0
37	0	0	0	0
38	0	0	0	0
39	0	0	0	0

MIN	SECONDS 0	15	30	45
40	0	0	0	0
41	0	0	0	0
42	0	0	0	0
43	0	0	0	0
44	0	0	0	0
45	0	0	0	0
46	0	0	0	0
47	0	0	0	0
48	0	0	0	0
49	0	0	0	0
50	0	0	0	0
51	0	0	0	0
52	0	0	0	0
53	0	0	0	0
54	0	0	0	0
55	0	0	0	0
56	0	0	0	0
57	0	0	0	0
58	0	0	0	0
59	0	0	0	0

Orientation:

- Source
- Sun
- Wind Direction & Speed
- Observation Point

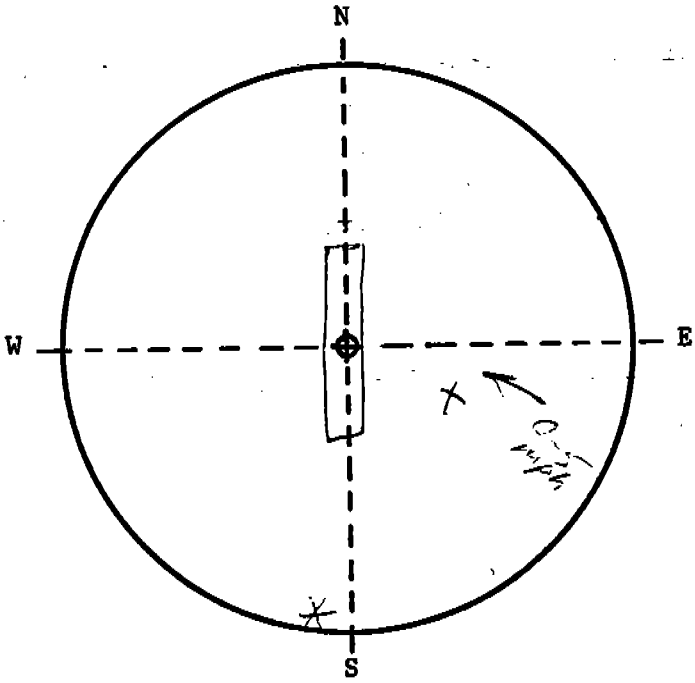

Remarks

13-82

Observation Record

Observer Norman Johnson Location Coke Shed #4 Batt East side

Time: Start 2:00 Am End 3:00 Am Date Dec. 29, 1982

MIN	SECONDS 0	15	30	45
0	0	0	0	0
1	0	0	0	0
2	0	0	0	0
3	0	0	0	0
4	0	0	0	0
5	0	0	0	0
6	0	0	0	0
7	0	0	0	0
8	0	0	0	0
9	0	0	0	0
10	0	0	0	0
11	0	0	0	0
12	0	0	0	0
13	0	0	0	0
14	0	0	0	0
15	0	0	0	0
16	0	0	0	0
17	0	0	0	0
18	0	0	0	0
19	0	0	0	0

DP RELIEF #16 P/S - DOCK EMISSIONS

MIN	SECONDS 0	15	30	45
20	0	0	0	0
21	0	0	0	0
22	0	0	0	0
23	0	0	0	0
24	0	0	0	0
25	0	0	0	0
26	0	0	0	0
27	0	0	0	0
28	0	0	0	0
29	0	0	0	0
30	0	0	0	0
31	0	0	0	0
32	0	0	0	0
33	0	5	10	0
34	0	0	0	0
35	0	0	0	0
36	0	0	0	0
37	0	0	0	0
38	0	0	0	0
39	0	0	0	0

PUSHED #36

MIN	SECONDS 0	15	30	45
40	0	0	0	0
41	0	0	0	0
42	0	0	0	0
43	0	0	0	0
44	0	0	0	0
45	0	0	0	0
46	0	0	0	0
47	0	0	0	0
48	0	0	0	0
49	0	0	0	0
50	0	0	0	0
51	0	0	0	0
52	0	0	10	10
53	0	0	0	0
54	0	0	0	0
55	0	0	0	0
56	0	0	0	0
57	0	0	0	0
58	0	0	0	0
59	0	0	0	0

PUSHED #8

OFFTAKE EMISSIONS P/S

Orientation:

- ○ Source
- ✱ Sun
- → Wind Direction & Speed W-<10 MPH
- + Observation Point

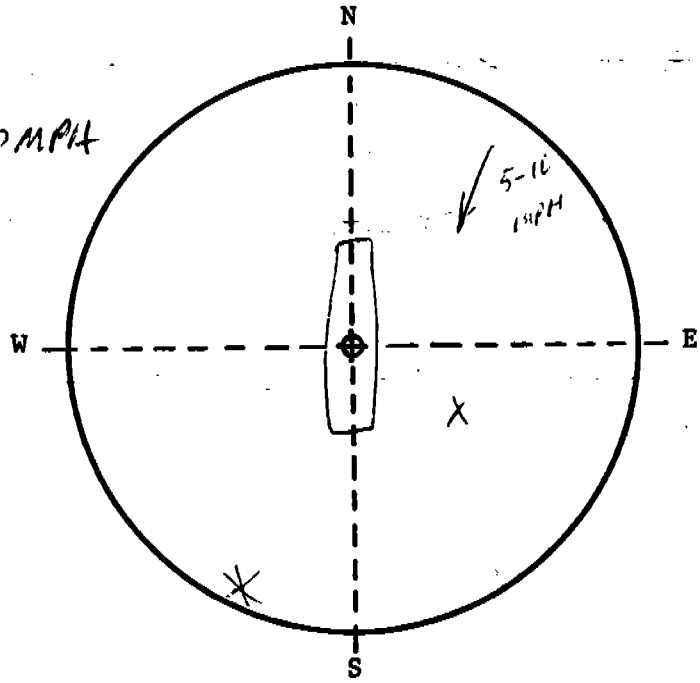

Remarks

13-83

Observation Record

East

Observer DENNIS PHISTER

Location TOPSIDE 4 BATT. COKESHED

Time: Start 3:00 P.M. End _____

Date 12-29-82

MIN	SECONDS 0	15	30	45
0	0	0	0	0
1	0	0	0	0
2	0	0	0	0
3	0	0	0	0
4	0	0	0	0
5	0	0	0	0
6	0	0	0	0
7	0	0	0	0
8	0	0	0	0
9	0	0	0	0
10	0	0	0	0
11	0	0	0	0
12	0	0	0	0
13	0	0	0	0
14	0	0	0	0
15	0	0	0	0
16	0	0	0	0
17	0	0	0	0
18	0	0	0	0
19	0	0	0	0

SOUTH END OFFTAKE EMISSIONS

MORE OFFTAKE EMISSIONS PIS

MIN	SECONDS 0	15	30	45
20	0	0	0	0
21	0	0	0	0
22	0	0	0	0
23	0	0	0	0
24	0	0	0	0
25	0	0	0	0
26	0	0	0	0
27	0	0	0	0
28	0	0	0	0
29	0	0	0	0
30	0	0	0	0
31	0	0	0	0
32	0	0	0	0
33	0	0	0	0
34	0	0	0	0
35	0	0	0	0
36	0	0	0	0
37	0	0	0	0
38	0	0	0	0
39	0	0	0	0

QUENCH STEAM SOUTH END

QUENCH STEAM BLOCKED SOUTH VISION

MIN	SECONDS 0	15	30	45
40	0	0	0	0
41	0	0	0	0
42	0	0	0	0
43	0	0	0	0
44	0	0	0	0
45	0	0	0	0
46	0	0	0	0
47	0	0	0	0
48	0	0	0	0
49	0	0	0	0
50	0	0	0	0
51	0	0	0	0
52	0	0	0	0
53	0	0	0	0
54	0	0	0	0
55	0	0	0	0
56	0	0	0	0
57	0	0	0	0
58	0	0	0	0
59	0	0	0	0

SHIFT CHANGE

Orientation:

- o Source
- ✱ Sun
- → Wind Direction & Speed NW < 5 MPH
- + Observation Point

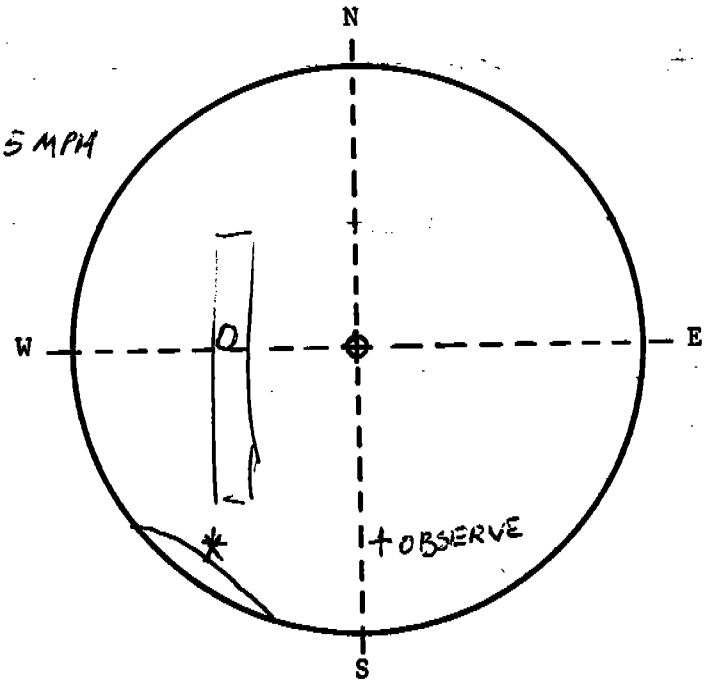

Remarks BLUE SKY 3:20 P.M.

13-84

Observation Record

Observer DENNIS PHISTER

Location TOPSIDES 4 BATT. COKE SHED EAST

Time: Start 4:00 P.M. End 5:00 P.M.

Date 12-29-82

MIN	SECONDS 0	15	30	45
0	0	0	0	0
1	0	0	0	0
2	0	0	0	0
3	0	0	0	0
4	0	0	0	0
5	0	0	0	0
6	0	0	0	0
7	0	0	0	0
8	0	0	0	0
9	0	0	0	0
10	0	0	0	0
11	0	0	0	0
12	0	0	0	0
13	0	0	0	0
14	0	0	0	0
15	0	0	0	0
16	0	0	0	0
17	0	0	0	0
18	0	0	0	0
19	0	0	0	0

MIN	SECONDS 0	15	30	45
20	0	0	0	0
21	0	0	0	0
22	0	0	0	0
23	0	0	0	0
24	0	0	0	0
25	0	0	0	0
26	0	0	0	0
27	0	0	0	0
28	0	0	0	0
29	0	0	0	0
30	0	0	0	0
31	0	0	0	0
32	0	0	0	0
33	0	0	0	0
34	0	0	0	0
35	0	0	0	0
36	0	0	0	0
37	0	0	0	0
38	0	0	0	0
39	0	0	0	0

← QUENCH STEAM NO. END.

MIN	SECONDS 0	15	30	45
40	0	0	0	0
41	0	0	0	0
42	0	0	0	0
43	0	0	0	0
44	0	0	0	0
45	0	0	0	0
46	0	0	0	0
47	0	0	0	0
48	0	0	0	0
49	0	0	0	0
50	0	0	0	0
51	0	0	0	0
52	0	0	0	0
53	0	0	0	0
54	0	0	0	0
55	0	0	0	0
56	0	0	0	0
57	0	0	0	0
58	0	0	0	0
59	0	0	0	0

Orientation:

- ⊖ Source
- ✱ Sun
- → Wind Direction & Speed NW 5MPH
- + Observation Point

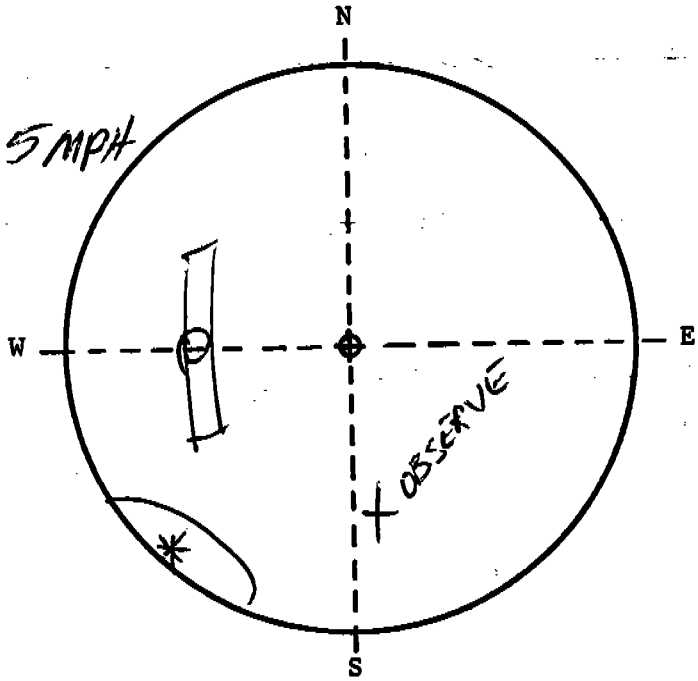

Remarks * VISIBILITY GETTING POOR DUE TO GLARE & SUN SETTING.

13-85

5

Observation Record

Spot Check of Baghouse Stacks

Observer MRK

Location Coke No Baghouse

Time: Start _____ End _____

Date 12-28-82

MIN	SECONDS 0	15	30	45	
0					
1					
2					
3					
4					
5					
6					
7					0938
8					
9					
10					0944
11					
12					
13					1003
14					
15					
16					
17					
18					
19					

MIN	SECONDS 0	15	30	45	
20					1155
21					
22					
23					
24					
25					
26					
27					
28					
29					
30					
31					
32					
33					
34					
35					
36					
37					
38					
39					

MIN	SECONDS 0	15	30	45
40				
41				
42				
43				
44				
45				
46				
47				
48				
49				
50				
51				
52				
53				
54				
55				
56				
57				
58				
59				

Orientation:

- Source
- Sun
- Wind Direction & Speed
- Observation Point

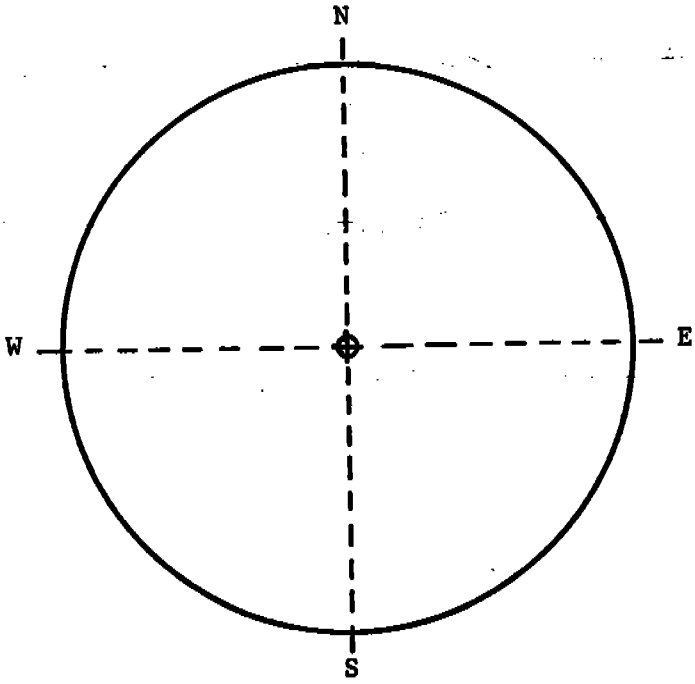

Remarks _____

13-86

Laboratory Data:

TIMP ENVIRONMENTAL TESTING CO.
SAMPLE RECOVERY

Location [illegible] Baghouse #1 Date [illegible]

Filter & Sample No. 244 Run No. 1 Acetone Blank .0003 g/100 ml H_2O Blank .0005

Filter Weights New Year

Date & Time 12-31-1700 1-1-0900

Final Wt. (g) .7934 .7935

Initial Wt.(g) .7904 .7904

Net Wt. (g) .0030 .0031

Average net wt. of 2 weighings within .5 mg (g) .00305

Front Wash Weights Volume of Acetone 470 ml

Date & Time 12-31-1700 1-1-0900

Final Wt. (g) 155.5766 155.5770

Initial Wt. (g) 155.5617 155.5617

Pre. Net Wt.(g) .0149 .0153

Average pre. net wt. of 2 weighings within .5 mg (g) .0151

Minus Acetone Blank .0014

Average Net Weight .0137

.00305

.01675 MF

Back Catch - H_2O

Impinger No.	1	2	3	4	5	6
Final Wt. (g)	595.4	647	[illegible]	[illegible]		
Initial Wt.(g)	[illegible]	647	481.0	8275		
Net Wt. (g)	(5.8)	6.0	1.9	14.7		

Total H_2O Collected (g) 16.8 ✓

Back Catch - Gravametric Analysis

Initial H_2O Vol.(ml) Imp. #1 100 Imp. #2 100 Imp. #3 _____ Imp. #4 ___

Date & Time 12-31-1700 1-1-0900

Final Wt. (g) 153.4775 153.4780

Initial Wt. (g) 153.4759 153.4759

Pre. Net Wt.(g) .0016 .0021

Average pre. net wt. of 2 weighings within .5 mg (g) .00185

Minus H_2O Blank .0010

Ave. Net Wt. (g) .00085 MB

TIMP ENVIRONMENTAL TESTING CO.
SAMPLE RECOVERY

Location Coke Plant Bag House #16 Date 12-[illegible]

Filter & Sample No. 245 Run No. 1 Acetone Blank .0003 g/100 ml H_2O Blank .0005

Filter Weights [illegible]

Date & Time	12-31-1700	1-1-0900
Final Wt. (g)	.7855	.7852
Initial Wt.(g)	.7856	.7856
Net Wt. (g)	(.0001)	(.0004)

Average net wt. of 2 weighings within .5 mg (g) (.00025)

Front Wash Weights Volume of Acetone 500 ml

Date & Time	12-31-1700	1-1-0900
Final Wt. (g)	153.6699	153.6703
Initial Wt. (g)	153.6561	153.6561
Pre. Net Wt.(g)	.0138	.0142

Average pre. net wt. of 2 weighings within .5 mg (g) .0140

Minus Acetone Blank .0015

Average Net Weight .0125

.0125 MF

Back Catch - H_2O

Impinger No.	1	2	3	4	5	6
Final Wt. (g)	[illegible]	62.5	501.6	[illegible]		
Initial Wt.(g)	596.8	617.7	498.4	853.1		
Net Wt. (g)	(6.3)	4.8	3.2	16.9		

Total H_2O Collected (g) 18.6 ✓

Back Catch - Gravametric Analysis

Initial H_2O Vol.(ml) Imp. #1 100 Imp. #2 [illegible] Imp. #3 _____ Imp #4 ___

Date & Time	12-31-1700	1-1-0900
Final Wt. (g)	155.4133	155.4136
Initial Wt. (g)	155.4093	155.4093
Pre. Net Wt.(g)	.0040	.0043

Average pre. net wt. of 2 weighings within .5 mg (g) .00415

Minus H_2O Blank .0010

Ave. Net Wt. (g) .00315 MB

TIMP ENVIRONMENTAL TESTING CO.
SAMPLE RECOVERY

#12

Location [illegible] Date 12-29-[illegible]

Filter & Sample No. 247 Run No. 1 Acetone Blank .0003 g/100 ml H_2O Blank .0005

Filter Weights NEW Box

Date & Time	12-31-1700	1-1-0900
Final Wt. (g)	.7882	.7879
Initial Wt. (g)	.7878	.7878
Net Wt. (g)	.0004	.0001

Average net wt. of 2 weighings within .5 mg (g) .00025

Front Wash Weights Volume of Acetone 360 ml

Date & Time	12-31-1700	1-1-0900
Final Wt. (g)	150.5061	150.5061
Initial Wt. (g)	150.4988	150.4988
Pre. Net Wt. (g)	.0073	.0073

Average pre. net wt. of 2 weighings within .5 mg (g) .0073

Minus Acetone Blank .0011

Average Net Weight .0062

.00025

.00645 MF

Back Catch - H_2O

Impinger No.	1	2	3	4	5	6
Final Wt. (g)	651.5	555.8	480.5	896.5		
Initial Wt. (g)	644.2	613.7	480.4	882.4		
Net Wt. (g)	50.3	(57.9)	0.1	14.1		

Total H_2O Collected (g) 6.6 ✓

Back Catch - Gravametric Analysis

Initial H_2O Vol. (ml) Imp. #1 100 Imp. #2 100 Imp. #3 _____ Imp. #4 ___

Date & Time	12-31-1700	1-1-0900
Final Wt. (g)	102.2115	102.2117
Initial Wt. (g)	102.1797	102.1797
Pre. Net Wt. (g)	.0318	.0320

Average pre. net wt. of 2 weighings within .5 mg (g) .0319

Minus H_2O Blank .0010

Ave. Net Wt. (g) .0309 MB

14-3

TIMP ENVIRONMENTAL TESTING CO.
SAMPLE RECOVERY

Location Colo [illegible] #17 Date 12-2[illegible]

Filter & Sample No. 246 Run No. 1 Acetone Blank .0003 g/100 ml H_2O Blank .0005

Filter Weights [illegible]

Date & Time 12-31-1700 1-1-0900

Final Wt. (g) .7860 .7856

Initial Wt.(g) .7857 .7857

Net Wt. (g) .0003 (.0001)

Average net wt. of 2 weighings within .5 mg (g) .0002

Front Wash Weights Volume of Acetone 375 ml

Date & Time 12-31-1700 1-1-0900

Final Wt. (g) 148.5278 148.5279

Initial Wt. (g) 148.5190 148.5190

Pre. Net Wt.(g) .0088 .0089

Average pre. net wt. of 2 weighings within .5 mg (g) .00885

Minus Acetone Blank .0011

Average Net Weight .00775

Back Catch - H_2O .0002 / .00775 MF

Impinger No.	1	2	3	4	5	6
Final Wt. (g)	592.9	621.5	500.0	839.9		
Initial Wt.(g)	[illegible]	618.8	498.1	823.2		
Net Wt. (g)	(9.0)	2.7	1.9	16.7		

Total H_2O Collected (g) 12.3 ✓

Back Catch - Gravametric Analysis

Initial H_2O Vol.(ml) Imp. #1 100 Imp. #2 100 Imp. #3 _____ Imp. #4 ___

Date & Time 12-31-1700 1-1-0900

Final Wt. (g) 91.9122 91.9123

Initial Wt. (g) 91.9096 91.9096

Pre. Net Wt.(g) .0026 .0027

Average pre. net wt. of 2 weighings within .5 mg (g) .00265

Minus H_2O Blank .0010

Ave. Net Wt. (g) .00165 MF

GAS ANALYSIS DATA FORM

#11, 12, 17 6

PLANT Geneva Steel Coke Plant Baghouse Stack #16

COMMENTS:

DATE 12-28-82 & 12-29 TEST NO 1 – 4

SAMPLING TIME (24-hr CLOCK)

SAMPLING LOCATION North Shed Baghouse

SAMPLE TYPE (BAG, INTEGRATED, CONTINUOUS)

ANALYTICAL METHOD Orsat

AMBIENT TEMPERATURE

OPERATOR JR

RUN / GAS	1		2		3		AVERAGE NET VOLUME	MULTIPLIER	MOLECULAR WEIGHT OF STACK GAS (DRY BASIS) M_d
	ACTUAL READING	NET	ACTUAL READING	NET	ACTUAL READING	NET			
CO_2	0		0				0	44/100	
O_2 (NET IS ACTUAL O_2 READING MINUS ACTUAL CO_2 READING)	21.0	21.0	21.0	21.0			21.0	32/100	6.72
CO (NET IS ACTUAL CO READING MINUS ACTUAL O_2 READING)	21.0	0	21.0	0			0	28/100	
N_2 (NET IS 100 MINUS ACTUAL CO READING)							79	28/100	22.12
								TOTAL	28.84

TIMP ENVIRONMENTAL TESTING CO.
SAMPLE RECOVERY

Location USS - Geneva Works, Coke P. No. Baghouse **Date** 12-28 & 29, 1982

Filter Weights		Filter Blanks #252	#253	#254
Date & Time	1st	12-31-1700	12-31-1700	12-31-1700
	2nd	1-1-0900	1-1-0900	1-1-0900
Final Wt. (g)	1st	.7891	.7884	.7905
	2nd	.7888	.7880	.7901
Initial Wt.(g)		.7888	.7882 mRK	.7903
Difference **Net Wt. (g)**	1st	.0003	.0002	.0002
	2nd	.0000	(.0002)	(.0002)
	Ave.	.00015	.0000	.0000

Standard filter treatment (before and after use) was applied to these filters. Steps taken after numbering are:

1. Heat in oven at 105°C for a minimum of 6 hours with dish cover off.
2. Desicate for a minimum of 6 hours with dish cover on.
3. Weigh and record.

When additional verification of final weight is desired, a second weighing is made after returning the filters to the desicator for an additional 6 hours. This was done with these filters along with the Sample filters used in this test. Blank numbers 252 and 253 were put through the process with filters used on Dec. 28 and number 254 was put through with filters used on Dec. 29.

Raw Production and Control Equipment Data:

Coke Battery Nos. 3 and 4 were operating during the test. Both batteries were on a push schedule of 20-21 ovens per 8 hour shift.

Five modules of the baghouse were operated at all times during the test. Stacks from two of the three modules were tested each day.

Records of operating parameters were made available to Agency Personnel to use as desired.

JRS master

O South Machines
X North Machines
- Break or lunch

THREE BATTERY PUSHING SCHEDULE

(58)

28 Dec 82 #2 Turn

		Batt 2	Batt 3	Batt 4			Batt 2	Batt 3	Ba
1	8:06		8:40	X 52	30	12:02	-	12:09 X 64	
2	14	O 67			31	10	-	12:2 X 6	
3	22		8:53	X 62	32	19	-	12:24 X 16	
4	31	O 9			33	27	O 62 MOD		-
5	39		X 48 9:05	-	34	35		O 43 12:43	
6	47	O 19			35	43		O 53 12:52	
7	55		X 19:13		36	51		O 63 12:[illegible]	
8	9:03	O 39			37	59		1:03 X 26	
9	11			X 49:26	38	107	O 4		
10	20		O 11 9:31	-	39	15		X 5 1:21	
11	28			X 14 9:38	40	23	O 14		
12	36		O 21 9:43		41	32	-	X 15 1:35	
13	49			X 24 9:5[illegible]	42	40	-	1:48 X 36	
14	52	O 49			43	48	-	1:55 X 56	
15	10:00	-	X 31 10:04		44	56	O 34		-
16	08	-	X 41 10:11		45	2 04		O 25 2:14	-
17	16	-		X 34 10:2[illegible]	46	12		O 35 2:23	-
18	24	O 59		-	47	20		2:29 X 66	
19	32		O 51 10:42		48	28	O 54		
20	39		O 3 10:59	-	49	37		2:43 X 8	
21	49			X 44 11:04	50	45	O 64		
22	:57	O 69			51	53		2:54 X 1[illegible]	
23	11:05			X 54 11:[illegible]	52	301		O 45 3:01	
24	13	O 2			53	09			X 5:06
25	21		X 13 11:31		54	17		O 55 3:[illegible]	
26	30	O 32			55	25		3:20	X
27	38		X 23 11:43		56	33		O 65 3:[illegible]	
28	46	O 52			57	41		3:34	X 4[illegible]
29	54	-	X 33 11:55		58	49	O 6		

Battery		
B 2	Mt's	47 mod
B 3	Mt's	charged up tight
B 4	Mt's	charged up tight

[redacted]

Job Master

O South Machines
X North Machines
- Break or lunch

THREE BATTERY PUSHING SCHEDULE

(58)

#3T 12-28-82

		Batt. 2	Batt 3	Batt 4			Batt 2	Batt 3	
1	4:06			X 58 4:10	30	8:02	-		X
2	14	O 16			31	:10	-		X
3	22			X 68 4:25	32	19	-		X
4	31	O 36 MOD			33	27	O 1		-
5	39		X 7 4:42½		34	35		O 39	-
6	47	O 46 SHORT			35	43		O 49	-
7	55		X		36	51		O 59	-
8	5:03	O 56			37	:59			X
9	11			X 1 MOD	38	9:07	O 11		
10	20		O 17		39	15			X
11	28			X 11	40	23	O 21		
12	36		O 27		41	32	-	X 69	
13	44			X 21	42	40	-	Chip P/s	X
14	52	O 66			43	48	-		X
15	6:00	-	X 37		44	56	O 31		-
16	08	-	X 47		45	1004		O 2	-
17	:16	-		X 31	46	12		O 12	-
18	24	O 8 Chip P/s		-	47	20			X
19	32		O 57	-	48	28	O 41 MOD		
20	39		O 67	-	49	37			X
21	49			X 41	50	45	O 51		
22	:57	O 18			51	53			X
23	7 05		Chip P/s	X 57	52	1101		O 22	
24	13	O 38			53	09			X
25	21		X 9		54	17		O 32	
26	30	O 48			55	25			X
27	38		X 19		56	33		O 42	
28	46	O 68			57	41			X
29	54	-	X 29		58	49	O 61 MOD		

Battery		
B 2	Mt's	6
B 3	Mt's	charged up tight
B 4	Mt's	charged up tight

O South Machines
X North Machines
- Break Or lunch

THREE BATTERY PUSHING SCHEDULE

(58)

JRC master

ODD #2 TURN 12-29-82

		Batt. 2	Batt 3	Batt 4			Batt 2	Batt 3	Batt 4
		39							
1	8:06	O 49			30	12:02	-	12:11	X 64
2	14		8:35	X 52	31	:10	-	12:20	X 6
3	22	O 59			32	19	O 34		-
4	31		X 68	8:50	33	27		O 12:37 53	-
5	39	O 69			34	35		O 12:46 63 chip a/s	-
6	47		X 19:04		35	43	O 54		Switches
7	55	O 2 Chip A/s			36	51		1:20	16
8	9:03		9:17	X 62	37	:59	O 64		
9	11		O 11 9:28		38	1:07	-	X 5 1:32	
10	20			X 4 9:29	39	15	O 6		
11	28		O 21 9:37 Chip A/s		40	23	-	X 15 1:48	
12	36			X 14 9:49	41	32	-	1:14	X 26
13	44	O 32 Chip A/s			42	40	-	1:26	X 36
14	52	-	X 31 9:58		43	48	O 16		-
15	10:00	-	X 41 10:12		44	56	2:04	O 25	-
16	08	-		X 24 10:22	45	2:04	2:16	O 35	-
17	16	O 52		-	46	12		2:34	X 56
18	24		O 51 10:45	-	47	20	O 36 Mod		
19	32		O 3 10:54	-	48	28		2:47 Mod	X 66
20	39		11:03	X 34	49	37	O 46 Short		
21	49		O 13 11:10		50	45		2:59	X 8
22	:57		11:17	X 44	51	:53		O 45 3:00	
23	11:05	O 62 Mod.			52	3:01		3:05	X 18
24	13		X 23 11:30		53	09		O 55 3:10	
25	21	O 4			54	17		3:15	X 28
26	30		X 33 11:43		55	25		O 65 3:21	
27	38	O 14		Missed cable cut	56	33		3:25	X 38
28	46	-	X 43		57	41	O 56		
29	54	-	12:03	X 54	58	49		3:36	X 48

Missed cable cut

Battery		
B 2	Mt's	39
B 3	Mt's	Changed up Tight
B 4	Mt's	Changed up Tight

O South Machines
X North Machines
- Break or lunch

TRIPLE BATTERY PUSHING SCHEDULE

(58)

#3 Turn under

ODD 12-29-82

		Batt. 2	Batt 3	Batt 4			Batt 2	Batt 3	Batt 4
1	4:06	O 66			30	8:02	-		X 3
2	14			X 4:58	31	:10	-		X 13
3	22	O 8			32	19	O 31		-
4	31		X 7 5:03		33	27		O 49	-
5	39	O 18			34	35	Chip P/S	O 59	-
6	47		X 17 5:11		35	43	O 41 Mod.		-
7	55	O 38	Chip P/S		36	51			X 23
8	5:03			X 68 Chip	37	:59	O 51		
9	11		O 27 5:26		38	9:07		X 69	
10	20		Mod.	X 15 5:17	39	15	O 61 Mod.		
11	28		O 37		40	23	-	X 2	
12	36			X 11	41	32	-		X 33
13	44	O 48			42	40	-		X 43
14	52	-	X 47		43	48	O 3		-
15	6:00	-	X 57		44	58		O 12	-
16	08	-	Chip P/S	X 21	45	10:04		O 22	-
17	16		O 67	-	46	12			X 53
18	24		O 9	-	47	20	O 33 Mod		
19	32		O 19	-	48	28			X 63
20	39			X 31	49	37	O 53		
21	49	O 68			50	45			X 5
22	:57		Chip P/S	X 41	51	:53		O 32	
23	7:05	O 1			52	11:01			X 15
24	13			X 51	53	09		O 42	
25	21	O 11			54	17			X 25
26	30		X 29		55	25		O 52	
27	38	O 21			56	33			X 35
28	46	-	X 39		57	41	O 63 Mod.		
29	54	-		X 61	58	49			X 45

Battery	
B 2	Mt's 56
B 3	Mt's Charge up Tight
B 4	Mt's Charge up Tight 15-4

Chronological Order of Test Events:

12/28/82

0800	Visual observations started- West side
0811	Visual observations started- East side Battery No. 4
0815	Visual observations started- East side Battery No. 3
0840	Start tests
1645	End tests and VED East battery No. 4
1650	End VED East side battery No. 3
1700	End VED West side batteries Nos. 3 and 4

12/29/82

0800	Start VED on East and West sides
0836	Start tests
1700	End VED's
1729	End tests

Calibration Procedures and results:

Calibration of the test equipment including the console dry gas meters, pitot tubes, nozzle diameters, and temperature sensors were carried out in accordance with the procedures outlined in the quality assurance handbook. The appropriate calibration data are presented in the following pages. The nozzle calibrations are recorded on the first page of the field data sheets.

Copies of VEO certification are also included.

METER BOX CALIBRATION DATA AND CALCULATION FORM

(English units)

Date 4 Aug 1982 Meter box number I

Barometric pressure, P_b = 25.50 in. Hg Calibrated by MRK & KK

Orifice manometer setting (ΔH), in. H_2O	Gas volume: Wet test meter (V_w), ft^3	Gas volume: Dry gas meter (V_d), ft^3	Temperatures: Wet test meter (t_w), °F	Temperatures: Dry gas meter: Inlet (t_{d_i}), °F	Temperatures: Dry gas meter: Outlet (t_{d_o}), °F	Temperatures: Dry gas meter: Avg[a] (t_d), °F	Time (θ), min	Y_i	$\Delta H@_i$ in. H_2O
0.5	4.997	5.040	75 74 74	78 80 82	78 79 80	79.5	11.0	1.000	1.87
1.0	5.000	5.102	74 74 74	82 86 88	80 81 82	83.2	7.9	.994	1.91
1.5	10.004	10.312	74 74 74	87 91 95	83 86 88	88.3	13.15	.992	1.96
2.0	10.003	10.438	74 74 73	92 98 99	88 89 90	92.7	11.5	.987	1.98
3.0	10.000	10.502	74 73 73	97 99 100	91 91 93	95.2	9.55	.983	2.04
~~4.0~~ .5	~~10~~ 4.997								
							Avg	.991	1.95

ΔH, in. H_2O	$\frac{\Delta H}{13.6}$	$Y_i = \frac{V_w P_b (t_d + 460)}{V_d (P_b + \frac{\Delta H}{13.6})(t_w + 460)}$	$\Delta H@_i = \frac{0.0317\,\Delta H}{P_b (t_d + 460)} \left[\frac{(t_w + 460)\,\theta}{V_w}\right]^2$
0.5	0.0368	$\frac{4.997 \times 25.50 \times 539.5}{5.040 \times 25.539 \times 534.3} = 1.000$	$\frac{.0371 \times .5}{25.50 \times 539.5}\left[\frac{534.3 \times 11.0}{4.997}\right]^2 = 1.87$
1.0	0.0737	$\frac{5.000 \times 25.50 \times 543.2}{5.102 \times 25.574 \times 534} = .994$	$\frac{.0371 \times 1.0}{25.50 \times 543.2}\left[\frac{534 \times 7.9}{5.000}\right]^2 = 1.91$
1.5	0.110	$\frac{10.004 \times 25.50 \times 548.3}{10.312 \times 25.610 \times 534} = .992$	$\frac{.0371 \times 1.5}{25.50 \times 548.3}\left[\frac{534 \times 13.15}{10.004}\right]^2 = 1.96$
2.0	0.147	$\frac{10.003 \times 25.50 \times 552.7}{10.438 \times 25.649 \times 533.7} = .987$	$\frac{.0371 \times 2.0}{25.50 \times 552.7}\left[\frac{533.7 \times 11.5}{10.003}\right]^2 = 1.98$
3.0	0.221	$\frac{10.001 \times 25.50 \times 555.2}{10.502 \times 25.721 \times 533.3} = .983$	$\frac{.0371 \times 3.0}{25.50 \times 555.2}\left[\frac{533.3 \times 9.55}{10.00}\right]^2 = 2.04$
4.0	0.294		

[a] If there is only one thermometer on the dry gas meter, record the temperature under t_d.

Quality Assurance Handbook M5-2.3A (front side)

METER BOX CALIBRATION DATA AND CALCULATION FORM

(English units)

Date Feb 13, 1982 Meter box number II

Barometric pressure, P_b = 25.65 in. Hg Calibrated by MRK

Orifice manometer setting (ΔH), in. H_2O	Gas volume: Wet test meter (V_w), ft^3	Gas volume: Dry gas meter (V_d), ft^3	Temperatures: Wet test meter (t_w), °F	Temperatures: Dry gas meter: Inlet (t_{d_i}), °F	Temperatures: Dry gas meter: Outlet (t_{d_o}), °F	Temperatures: Dry gas meter: Avg[a] (t_d), °F	Time (Θ), min	Y_i	$\Delta H@_i$ in. H_2O
0.5	4.998	4.910	77 77 77	85 87 88	80 80 80	83.3	13' 14"	1.028	1.97
1.0	5.001	4.974	77 76 76	90 91 91	82 82 82	86.3	10 54	1.021	—
1.5	10.004	10.024	76 76 76	95 95 97	83 83 83	89.3	13' 49"	1.018	1.86
2.0	10.008	10.211	76 76 76	92 100 105	88 88 90	93.8	13' 5"	1.007	1.87
3.0	10								
4.0	10								
							Avg	1.0185	1.90
								(1.02)	

ΔH, in. H_2O	$\frac{\Delta H}{13.6}$	$Y_i = \frac{V_w P_b (t_d + 460)}{V_d (P_b + \frac{\Delta H}{13.6})(t_w + 460)}$	$\Delta H@_i = \frac{0.0317\ \Delta H}{P_b (t_d + 460)} \left[\frac{(t_w + 460)\ \Theta}{V_w}\right]^2$
0.5	0.0368	$\frac{4.998 \times 25.65 \times 543.3}{4.910 \times 25.6868 \times 537.0} = 1.028$	$\frac{.01585}{25.654 \times 543.3}\left[\frac{537 \times 13.25}{4.998}\right]^2 = 1.97$
1.0	0.0737	$\frac{5.001 \times 25.65 \times 546.3}{4.974 \times 25.7237 \times 536.3} = 1.021$	—
1.5	0.110	$\frac{10.004 \times 25.65 \times 549.3}{10.024 \times 25.76 \times 536} = 1.018$	$\frac{.04755}{25.65 \times 549.3}\left[\frac{536 \times 13.85}{10.004}\right]^2 = 1.86$
2.0	0.147	$\frac{10.008 \times 25.65 \times 553.8}{10.211 \times 25.797 \times 536} = 1.007$	$\frac{.0634}{25.65 \times 553.8}\left[\frac{536 \times 13.08}{10.008}\right]^2 = 1.87$
3.0	0.221		
4.0	0.294		

[a] If there is only one thermometer on the dry gas meter, record the temperature under t_d.

POSTTEST DRY GAS METER CALIBRATION DATA FORM (English units)

Test number I Date 1-7-83 Meter box number I Plant USS Coke Baghouse

Barometric pressure, P_b = 25.64 in. Hg Dry gas meter number I Pretest Y .99

Orifice manometer setting, (ΔH), in. H_2O	Gas volume: Wet test meter (V_w), ft^3	Gas volume: Dry gas meter (V_d), ft^3	Temperature: Wet test meter (t_w), °F	Temperature: Dry gas meter: Inlet (t_{d_i}), °F	Temperature: Dry gas meter: Outlet (t_{d_o}), °F	Temperature: Dry gas meter: Average[a] (t_d), °F	Time (Θ), min	Vacuum setting, in. Hg	Y_i	Y_i $\frac{V_w P_b (t_d + 460)}{V_d \left(P_b + \frac{\Delta H}{13.6}\right)(t_w + 460)}$
1.0	10.004	9.685	71 71 71	65 65 69	60 75 80	69	14' 27"	5"	1.03	
1.0	~~10~~9.998	9.894	71 71 71	71 75 80	80 90 94	82	15' 57	5"	1.03	
1.0	10.000		71 71 71	85 86 90	99 [illegible] 105	93	16' 06	5"	1.03	
									Y = 1.03	

[a] If there is only one thermometer on the dry gas meter, record the temperature under t_d

where

V_w = Gas volume passing through the wet test meter, ft^3.

V_d = Gas volume passing through the dry gas meter, ft^3.

t_w = Temperature of the gas in the wet test meter, °F.

t_{d_i} = Temperature of the inlet gas of the dry gas meter, °F.

t_{d_o} = Temperature of the outlet gas of the dry gas meter, °F.

t_d = Average temperature of the gas in the dry gas meter, obtained by the average of t_{d_i} and t_{d_o}, °F.

ΔH = Pressure differential across orifice, in. H_2O.

Y_i = Ratio of accuracy of wet test meter to dry gas meter for each run.

Y = Average ratio of accuracy of wet test meter to dry gas meter for all three runs; tolerance = pretest Y $\pm$0.05Y.

P_b = Barometric pressure, in. Hg.

Θ = Time of calibration run, min.

KKA CC

POSTTEST DRY GAS METER CALIBRATION DATA FORM (English units)

Test number 1 Date 1-7-83 Meter box number II Plant USS Coke Ovens

Barometric pressure, P_b = 25.64 in. Hg Dry gas meter number II Pretest Y 1.02

Orifice manometer setting, (ΔH), in. H_2O	Gas volume: Wet test meter (V_w), ft^3	Gas volume: Dry gas meter (V_d), ft^3	Temperature: Wet test meter (t_w), °F	Temperature: Dry gas meter: Inlet (t_{d_i}), °F	Temperature: Dry gas meter: Outlet (t_{d_o}), °F	Temperature: Dry gas meter: Average (t_d),[a] °F	Time (Θ), min	Vacuum setting, in. Hg	Y_i	$Y_i \frac{V_w P_b (t_d + 460)}{V_d \left(P_b + \frac{\Delta H}{13.6}\right)(t_w + 460)}$
1.05	10.000	10.128	71 71 71	80 88 90	92 110 110	95	20' 19"	7"	1.03	
1.05	10.000	10.369	71 71 71	92 97 99	110 118 119	106	20' 22"	7"	1.02	
1.05	10.003	10.649	71 71 71	99 105 105	119 122 122	112	20' 27"	7"	1.02	
									Y = 1.02	

[a] If there is only one thermometer on the dry gas meter, record the temperature under t_d

where

V_w = Gas volume passing through the wet test meter, ft^3.

V_d = Gas volume passing through the dry gas meter, ft^3.

t_w = Temperature of the gas in the wet test meter, °F.

t_{d_i} = Temperature of the inlet gas of the dry gas meter, °F.

t_{d_o} = Temperature of the outlet gas of the dry gas meter, °F.

t_d = Average temperature of the gas in the dry gas meter, obtained by the average of t_{d_i} and t_{d_o}, °F.

ΔH = Pressure differential across orifice, in. H_2O.

Y_i = Ratio of accuracy of wet test meter to dry gas meter for each run.

Y = Average ratio of accuracy of wet test meter to dry gas meter for all three runs; tolerance = pretest Y $\pm$0.05Y.

P_b = Barometric pressure, in. Hg.

Θ = Time of calibration run, min.

MRK & CC

TYPE S PITOT TUBE INSPECTION DATA

Date 10-18-82 Pitot Tube Identification 5-A

D_t = .25 in.

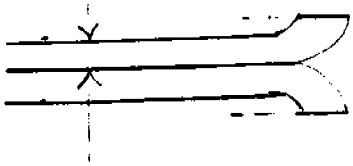

P_A = .368 in. $P_A = P_B$ ✓

P_B = .368 in. (1.05 - 1.50 D_t) ✓

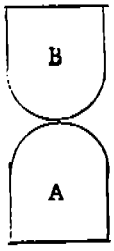

α_2 (10°) = 2 °

α_1 (10°) = 1 °

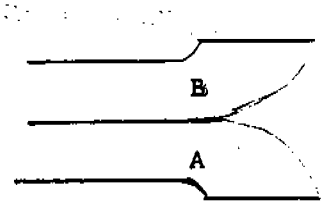

β_2 (5°) = 0 °

β_1 (5°) = 1 °

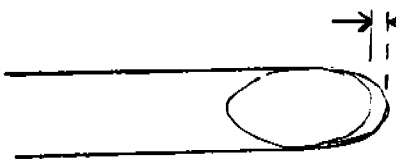

Z (1/8") = 0 in.

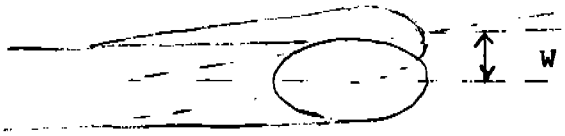

W (1/32") = 0 in.

Pitot tube meets specifications for calibration factor of .84 - Yes ✓ No ____

TYPE S PITOT TUBE INSPECTION DATA

Date 10-18-82 Pitot Tube Identification 5-B

D_t = .25 in.

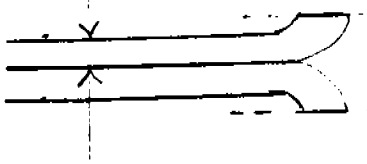

P_A = .356 in. $P_A = P_B$ ✓

P_B = .356 in. (1.05 - 1.50 D_t) ✓

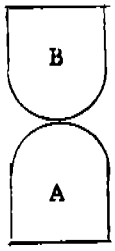

α_2 (10°) = 1 °

α_1 (10°) = 2 °

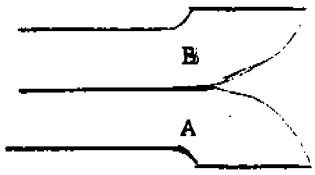

β_2 (5°) = 3 °

β_1 (5°) = 1 °

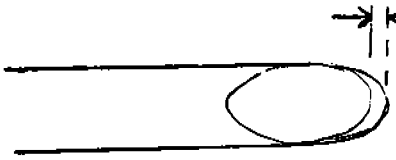

Z (1/8") = 1/32 in.

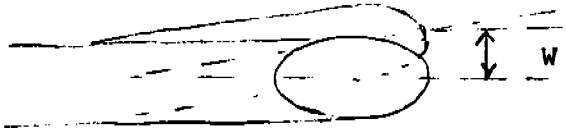

W (1/32") = 0 in.

Pitot tube meets specifications for calibration factor of .84 - Yes ✓ No ____

SAMPLE BOX TEMPERATURE SENSOR CALIBRATION

Date 8-4-82 Sample Box No. #1 & Meter #1

Ambient temperature _____ Barometric preasure _____ in. Hg

Calibrator Sm RK Reference thermometer glass in Mercury

Thermocouple location	Reference point	Temperature source	Reference thermometer temperature	Thermocouple temperature	Temperature difference %
Box					
Imp. In	1	Ice Bath	43	44	
	2	H_2O	72	73	
	3	Hot H_2O	182	184	
Imp. Out	1	Ice Bath	45	45	
	2	H_2O	72	71	
	3	Hot H_2O	180	178	
Meter #1					
Meter in	1	Ice Bath	46	45	
	2	H_2O	73	72	
	3	Hot H_2O	178	177	
Meter out	1	Ice Bath	47	48	
	2	H_2O	72	73	
	3	Hot H_2O	175	177	

SAMPLE BOX TEMPERATURE SENSOR CALIBRATION

Date 8-4-82 Sample Box No. # II Meter # II

Ambient temperature _____ Barometric preasure _____ in. Hg

Calibrator MRK Reference thermometer Glass in Mercury

Thermocouple location	Reference point	Temperature source	Reference thermometer temperature	Thermocouple temperature	Temperature difference %
Box					
Imp. In	1	Ice Bath	44	45	
	2	H_2O	72	73	
	3	Hot H_2O	186	188	
Imp. out	1	Ice Bath	46	47	
	2	H_2O	73	74	
	3	Hot H_2O	184	187	
Meter					
Meter in	1	Ice Bath	45	47	
	2	H_2O	73	74	
	3	Hot H_2O	184	186	
Meter out	1	Ice Bath	46	45	
	2	H_2O	73	72	
	3	Hot H_2O	180	179	

STACK TEMPERATURE SENSOR CALIBRATION DATA FORM

Date 10-18-82 Thermocouple number 5-A

Ambient temperature _____ °~~C~~ Barometric pressure _____ in. Hg

Calibrator MRK Reference: mercury-in-glass ✓

other _____

Reference point number[a]	Source[b] (specify)	Reference thermometer temperature, °~~C~~ F	Thermocouple potentiometer temperature, °~~C~~ F	Temperature difference,[c] %
1	H_2O	92	92	
2		141	140	
3		186	184	

[a]Every 30°C (50°F) for each reference point.

[b]Type of calibration system used.

[c] $\left[\frac{(\text{ref temp, °C} + 273) - (\text{test thermom temp, °C} + 273)}{\text{ref temp, °C} + 273}\right] 100 \leq 1.5\%.$

Quality Assurance Handbook M2-2.10

STACK TEMPERATURE SENSOR CALIBRATION DATA FORM

Date 10-18-82 Thermocouple number 5-B

Ambient temperature _____ °C Barometric pressure _____ in. Hg

Calibrator DRK Reference: mercury-in-glass ✓

other _____

Reference point number[a]	Source[b] (specify)	Reference thermometer temperature, °C	Thermocouple potentiometer temperature, °C	Temperature difference,[c] %
1	H_2O	92	91	
2		139	140	
3		185	183	

[a]Every 30°C (50°F) for each reference point.

[b]Type of calibration system used.

[c] $\left[\frac{(\text{ref temp, °C} + 273) - (\text{test thermom temp, °C} + 273)}{\text{ref temp, °C} + 273}\right] 100 \leq 1.5\%.$

Quality Assurance Handbook M2-2.10

Utah State
Division of Environmental Health

Awards This Certificate To

Mel Kitchen

For Successfully Completing The
Visible Emmissions Evaluation Course
Conducted By
The Bureau of Air Quality

Director, Division of Environmental Health

Director, Bureau of Air Quality

NOV 4 1982
Date

© GOES 748

17-11

Utah State
Division of Environmental Health

Awards This Certificate To

SUSAN FERGUSON

For Successfully Completing The
Visible Emmissions Evaluation Course
Conducted By
The Bureau of Air Quality

Director, Division of Environmental Health

Director, Bureau of Air Quality

August 26, 1982
Date

17-12

© ODES 748

Utah State
Division of Environmental Health

Awards This Certificate To

Newell Kitchen

For Successfully Completing The
Visible Emmissions Evaluation Course
Conducted By
The Bureau of Air Quality

Director, Division of Environmental Health

Director, Bureau of Air Quality

NOV 4 1982
Date

17-13

© GNE S 748

Utah State
Division of Environmental Health

Awards This Certificate To

Norman Johnson

For Successfully Completing The
Visible Emmissions Evaluation Course
Conducted By
The Bureau of Air Quality

Director, Division of Environmental Health

Director, Bureau of Air Quality

NOV 3 1982
Date

19-14

Utah State
Division of Environmental Health

Awards This Certificate To

Dennis Phister

For Successfully Completing The
Visible Emmissions Evaluation Course
Conducted By
The Bureau of Air Quality

Director, Division of Environmental Health

Director, Bureau of Air Quality

NOV 3 1982

Date

17-15

Utah State
Division of Environmental Health

Awards This Certificate To

Keith Smith

For Successfully Completing The
Visible Emmissions Evaluation Course
Conducted By
The Bureau of Air Quality

Director, Division of Environmental Health

Director, Bureau of Air Quality

NOV 3 1982
Date

17-16

© DDES 748

LITHO IN U.S.A.

Utah State
Division of Environmental Health

Awards This Certificate To

ROBERT OLSEN

For Successfully Completing The
Visible Emmissions Evaluation Course
Conducted By
The Bureau of Air Quality

Director, Division of Environmental Health

Director, Bureau of Air Quality

November 4, 1982

Date

17-17

Project Participants and Titles:

Utah Department of Health, Bureau of Air Quality
- Jim Stephens ..... Observer
- Jeff Dean ..... Observer
- Dave McNeill ..... Observer
- Michael Behling ..... Observer

Environmental Protection Agency
- Paul Wolf ..... Observer
- Matthew Sutton ..... Observer

Facility
- Boyd Erickson ..... Supt. Env. Control Eng.
- James R. Starley .... Sr. Env. Control Eng.
- Max Buckner ..... Engineer
- Ronald Harris ..... Env. Control Engineer
- H. A. Brown ..... Supt. Coke Plant
- Mark Peotter ..... Mikropul Engineer

Tims Environmental Testing
- Melvin Kitchen ..... Director
- Jack Ruckman ..... Consultant
- Arthur Holloman ..... Consultant
- Boyd Davis ..... Technician
- Cory Colledge ..... Technician
- Travis Fraughton .... Technician
- Susan Ferguson ..... VEO
- Newell Kitchen ..... VEO
- Keith B. Smith ..... VEO
- Dennis Phister ..... VEO
- Norman B. Johnson ... VEO
- Robert Olsen ..... VEO

Related Correspondence:

The testing protocol is presented in the following pages.

PRE-TEST MEETING

COKE PLANT PUSHING EMISSION SHED
NOS. 3 AND 4 BATTERIES NORTH BAGHOUSE

December 27, 1982 - 3:00 P.M.

AGENDA

1. A review of safety requirements for the contractors and the agencies.

   a. Review the safety requirements.

      (1) Safety attire on battery topsides.

      (2) Railroad traffic and mobile equipment hazards.

      (3) Driving and parking instructions - crossing over batteries.

      (4) Ear plugs - on test platform.

   b. Review the safety handout and sign.

2. Review protocol for Nos. 3 and 4 batteries pushing emission shed.

All watches will be coordinated with the U. S. Steel Coordinator's watch and all time will be recorded on that basis.

this protocol was not agreed to by EPA - it has problems

PARTICULATE EMISSION TESTING FOR COMPLIANCE - U. S. STEEL GENEVA WORKS

PROVO, UTAH

COKE PLANT PUSHING EMISSION CONTROL BAGHOUSE AND FUGITIVE TEST PROTOCOL

I. Project Organization and Responsibility

The following personnel and the testing contractor are presently anticipated to be involved in the testing program. EPA and UDH may have their own personnel or contractor observe all phases including the process.

Testing Contractor: Tetco

USSC Personnel:

Boyd C. Erickson, General Supervisor, Environmental Control Engineering

Jim R. Starley, Sr. Environmental Control Engineer - USSC Coordinator

Max Buckner - USSC Coordinator

During these tests only USSC personnel listed above or an assigned personnel from the operation are authorized to answer or obtain answers to pertinent questions on the process conditions or the test protocol.

II. Project Description

This protocol outlines the specific test procedures to be employed in demonstrating compliance with the mass, opacity, and flow rate limitations of the Geneva Consent Decree as specified in Appendixes 1.2, 1.3 and 1.6 as applied to Nos. 3 and 4 coke battery pushing-emission-control baghouse. This protocol specifically covers testing the north baghouse and Nos. 3 and 4 batteries.

Geneva employs two identical pushing-emission-control systems, each consisting of two shed-type enclosures (one per battery) for the capture and containment of pushing emissions and one Pulsaire-type baghouse for two batteries, comprised of 10 identical modules for dust removal. Cleaned gases are discharged to the atmosphere via separate fans and exhaust stacks located on each module. The number of modules in service during the compliance demonstration will be determined by USSC and this information will be given to the agencies in the pre-test meeting on Monday, December 27, 1982. The testing procedure will include accumulating process data and production data as well as testing for particulate emissions using EPA Method 5. Fugitive emissions will be evaluated during each test run using Method 9. The total particulate will be determined under current operating levels with Nos. 3 and 4 batteries on 24-hour coking cycles to demonstrate compliance of the subject emission points with limitations provided in consent decree case No. C-80 paragraph B.2(f)(1)(2)(3) and (4).

III. Test Schedule

Compliance test for the pushing emission controls requires the testing of four (4) out of the 10 stacks on each of two baghouses. Testing will start on two of the stacks of the north baghouse and will be run simultaneously. One test run will be made on two stacks and then a second test run on the other two stacks, the second pair of stacks will be completed the following day. Each test will take approximately 10 hours to sample the 44 pushes. A pre-test meeting will be held at 3:00 P.M. on Monday, December 27, 1982. The tentative time schedule for testing activities is as follows:

On Monday, December 27, 1982, at 08:00 a.m. Contractor and USS Representatives will meet at Geneva Administration Building in the environmental control lab for

orientation, safety and final test preparation meeting. The contractor will set up his equipment in Geneva's Air Quality laboratory and on the stack for taking preliminary data. The lab crew will clean all probes and set up a complete set of equipment. Then the crew will begin preliminary tests for moisture, temperature and velocities on two of the stacks of the north baghouse. When complete, secure equipment for next day's testing.

On December 28, 1982, shortly before 0800, pick up equipment and move to the stacks on the north baghouse. Begin test run No. 1 and continue until 44 pushes have been sampled. Sample for 2 1/2 minutes at each of 44 points in the two stacks being tested. There will be continuous VEO's made of the sheds during the test run by four observers and one relief observer rotating every half hour to provide relief. This same schedule. will be repeated the next day, December 29, on the other two stacks to be tested on the north baghouse.

IV. Test Procedures

A. General

Stack testing will follow Appendix 1.6 of the consent decree and Appendix 1.3 as modified in Appendix 1.6, Methods 1-5.

B. Other Detail Procedures

1. Prior to any testing, simultaneous velocity traverses will be performed at a suitable location in the outlet duct from each shed before the baghouse, to verify attainment of the maximum exhaust rate specified in the Consent Decree for the shed system and to correlate the continuous measurements of the annubar probe device for each battery. This determination will be made with 10 modules in operation. However, mass-emissions

measurements for compliance purposes will be performed with the number of modules in operation that has been determined by USSC pursuant to Par. B.2(f)(7)(A).

2. To help assure the representativeness of mass-emission rates determined for each baghouse pushing-emission-control system, one test run will be performed on each of four modules. Selection of the stacks to be tested has been made by consulting with agency personnel prior to test set-up period which will allow the contractor adequate time to install his test equipment prior to start-up. Simultaneous testing, although not a requirement of this protocol, may be performed if desired.

3. Sampling will be performed in accordance with Methods 1 through 5 of 40 CFR, Part 60, Appendix A, for the determination of volumetric flow rate and particulate mass emissions. 44 point points (22 per diameter), will be sampled at the rate of one point per coke-oven push in each exhaust stack tested (stack drawing attached). Sampling will commence at the start of the push and continue for a duration of 2-1/2 minutes, resulting in a total sampling time of 110 min. Based on an estimated pushing rate of five ovens per hour, approximately ten hours will be required to complete one test run. During non-sampling periods, the sampling probe will be removed from the exhaust stack.

4. If the vacuum exceeds the value to maintain isokinetic flow during the tests, the filter will be changed in the field with an extra loaded filter holder which will be ready if needed.

5. No cyclone will be used ahead of the filter.

6. Continuous VEO's will be made of fugitive emissions from the shed as long as the light permits. It is likely that VEO's will have to conclude prior to the end of each day's Method 5 sampling because of insufficient light. If this occurs, no additional VEO time will be added after the Method 5 sampling has been completed. The decision to stop VEO's will be made in the field by the USSC coordinator upon consultation with EPA and UDH representatives. An integrated sample of the flue gas will be taken from the exhaust line after the orifice of the dry gas meter during the first run. These gases will be analyzed with an orsat to determine the molecular weight. If the samples are essentially air, sampling will be discontinued on further tests.

7. Any necessary preparation and clean-up by the contractor will be performed in the laboratory at Geneva Works Administration Building. The laboratory work and analyses will be done by the contractor as soon as possible after each test in Geneva's Air Quality Lab.

8. Back half will be determined by the UDH Method dated October 19, 1981. Back half particulate should be included in the report but not used to determine compliance with State Regulations.

9. Testing will be performed only during periods of normal production and at 24 hour coking times on batteries 3 and 4. Partially charged ovens will be counted the same as normally charged ovens because emissions appear the same as with a normal size push. The temperatures maintained on partially charged ovens are essentially the same as the normally charged ovens. Green pushes and sticker ovens are considered abnormal conditions and will not be sampled. In the event of any non-representative plant activity or any equipment malfunction, testing will be temporarily suspended until the problem is corrected and normal production resumes. This determination will be made in

the field by USSC coordinator upon consultation with EPA and UDH representatives.

Three filters will be designated as "blank" filters and will be identified and weighed initially with the test filters. The "blank" filters will be dried and dessicated in the same manner as the test filters, but will remain in their covered petri dishes while the test filters are on the stack. Final weights will be taken on the "blank" filters and the test filters at the same time. The "blank" filters will be used as control samples for the check on the analytical balance.

10. Data Reduction

Data reduction will include the calculation of volumetric flow rate for each module tested. Individual and average dust concentrations will be calculated on the basis of front-half particulate weight. Compliance with the emission standard in par. B.2(f)(3)(A)(i) shall be determined by flow weight averaging the test results in grains/DSCF for all stacks tested.

V. Process Information

A. Specific Data

The process conditions that exist now, as proposed during the compliance demonstration and as can best be projected subsequent to the compliance demonstration are as follows:

Nos. 1, 2, 3 and 4 Coke Plant Batteries
Process Operating Conditions

	Now Batt. No.				Proposed During Test Batt. No.				Projected Following Test Batt. No.			
	1	2	3	4	1	2	3	4	1	2	3	4
Identity of Ovens Unavailable		14				14	2	2		14	2	2
Identity of Ovens Partially Charged	Idle Hot	6	Idle Hot	Idle Hot	Idle Hot	6	0	2	Idle Hot	6	0	2
Ovens Blank Off		14				14	2	2		14	2	2

	Now				Proposed During Test				Projected Following Test			
	Batt. No.				Batt. No.				Batt. No.			
	1	2	3	4	1	2	3	4	1	2	3	4
Approximate Length of Coking Cycle in General (Hrs.)	Idle Hot	22	Idle Hot	Idle Hot	Idle Hot	22	24	24	Idle Hot	22	24	24
Applies to All Batteries												
Charging sequence for the ovens	-10 (21-31-41)				-10 (21-31-41)				-10 (21-31-41)			
Amount of Coal charged and length of a charge in general, partially charged ovens.	13.7 tons 2-2½ min. Approx. 10 Tons About 1 min.				13.7 tons 2-2½ min. Approx. 10 Tons About 1 min.				13.7 tons 2-2½ min. Approx. 10 Tons About 1 min.			
Battery pressure, as measured at the Askania house.	5-6½ mm Hg				5-6½ mm Hg				5-6½ mm Hg			
Quantity and quality of oil sprayed on the coal prior to charging	1-3 pts/ton #2 fuel oil & waste oil				1-3 pts/ton #2 fuel oil & waste oil				1-3 pts/ton #2 fuel oil & waste oil			
Oven temperature, including variations from oven to oven and/or through the coking cycle.	#2 Batt. 7th flue avg. temp. PS 1950° 2000° CS 2000° 2050° #3 & 4 50° lower				Same				Same			
Frequency of change of gas flow direction through the checkers	30 min.				30 min.				30 min.			
Bulk density	44-47 #/CF at Larry Car				Same				Same			
Pulverization	79-83% - 1/8"				Same				Same			
Stability (Std. ASTM D-3402 - 76 Test)	56-58%				Same				Same			
Hardness (Std. ASTM D-3402 - 76 Test)	68-72				Same				Same			
Moisture	Avg. 5.3% May vary depending on weather.				Same				Same			

	Battery No. 1 (Idle Hot 1)	2	3	4
Ovens Unavailable		12, 13, 24, 25, 26, 28, 29, 45, 57, 58, 23, 42, 43, 44, 22	61 & 62	46 & 47
Ovens Partially Charged*		35, 36, 41, 46, 47, 62, 33, 63.	-	1 & 66

Quality of coal charged, as measured by an ultimate analysis.

	Range in Percent
Carbon	76.70 - 79.61
Hydrogen	4.41 - 6.13
Nitrogen	1.68 - 1.82
Ash	6.80 - 7.20
Sulphur	.62 - .67
Oxygen	6.10 - 9.04
Fixed H_2O	5.947 - 6.890

*Partially charged ovens - the reason for short or modified charges is because of wall damage to the ovens. The procedure in charging these ovens, is to charge the No. 3 hole then the No. 2 hole followed by charging No. 1 until it hangs up and then cut the charge off and then level. When pushed emissions are about the same.

B. Process data that is recorded and is available is as follows:

1. Stack draft in mm H_2O.
2. Flue temperature.
3. Oxygen analyzer.
4. Fuel gas volume.
5. Fuel gas temperature.

6. Gas pressure - Fuel
7. Charging-pushing report.
8. Oven schedules.
9. Daily operator's report.
10. Spraying log.
11. Flue leakage log.
12. Daily battery emission monitoring data.
13. Daily heating report.
14. Collector main pressure.
15. Oven temperature report.
16. Ultimate analysis of the coal.

C. Control Facilities Operating Parameters

1. Baghouse temperature. 100°F - 150°F.
2. Pressure drop. - 3" - 4" W.C.
3. Bag cleaning frequency - automatic with pressure drop.
4. Pulse-air pressure 100-120 psig.
5. Flow rate from each of No. 3 and No. 4 battery sheds and total flow rate during pushing and non-pushing modes.
6. Bag material - polyester - felt.
7. Bag weight - 16 oz./sq. yard.

VI. Test Area

The test area shall include the Nos. 3 and 4 coke batteries, process control center for both batteries and the north baghouse stacks and control center. Also areas appropriate for visible observations outside the coke plant proper and the laboratory area for preparation, clean-up and laboratory activities located in the administration building at Geneva Works.

VII. The Visible Emissions Observation Program Method

Visible emission observations will be recorded by certified smoke observers in accordance with 40 CFR, Appendix A, Method 9. Random observations will be made of the exhaust stacks being tested but continuous visual emission observation will be made by four observers of emissions escaping from any part of either shed. These readings will be made as specified in par. B.2(f)(6) and (7)(B) and Appendix 1.2 of the consent decree. An additional observer will rotate making observations every one-half hour to allow rest time for the other four observers.

VIII. Contacts by Agencies or Their Representatives During Tests and Process Observations

1. The contractor will have complete responsibility for all test work and analysis, including preparation and clean-up.
2. The U. S. Steel representative will make all necessary clearances for entering and leaving the plant.
3. The contractor may be continuously monitored by UDH, EPA and USS representatives but no information will be given out or made available either verbally or in writing to any person or organization without first clearing with the USSC coordinator in charge of the test.
4. All agencies agree to provide notice to USSC before arranging to make any observations performed under this protocol. Notice shall be sufficient to give USSC an opportunity to have a representative present.

5. The agencies agree that agency observers will make all reasonable effort to identify and report to USSC conditions in the field which may constitute a basis for invalidating the tests while in the field. However, each agency reserves its right to assess the validity of inspections based on later review and evaluation.

6. The agencies agree that agency observers will act as observers only, and will not physically participate in any of the pretest, testing, cleanup, and laboratory procedures, including personally making any adjustments or changes to the operating facilities.

7. During the inspections and observations of the process, agency representatives and/or their representatives, shall not question any operating personnel. If information is needed, which is pertinent to the testing evaluation, contact will be made with the USSC coordinator, who will obtain the required data. USSC shall make a coordinator available at all times during the inspections.

IX. Quality Assurance (General)

1. Stack testing will be conducted according to Methods 1-5 and appropriate sections of EPA Quality Assurance Handbook Vol. III. Method 9 will be followed as closely as possible. All observers will have been certified within the last six (6) months.

2. UDH, EPA and USSC personnel will meet to agree on definitions, inspection methods and reporting to assure accuracy and quality assurance.

X. Reporting

Reports will be prepared by USS contractor and copies of raw data and calculations will be submitted as verification of compliance. All requested process and production data will be provided by U. S. Steel to EPA and UDH.

Distribution of test reports:

R. W. Pett, Chief Engineer - Geneva-Pittsburg Works

John Hawthorne, USS Research

D. R. Cronin, USS Pittsburgh Environmental Control

T. W. Goettge, Division Supt. Coke and Coal Chemicals - Geneva Works

M. R. Curtis, Division Supt. Maintenance and Utilities

B. C. Bradford, Bureau of Air Quality, UDH

R. L. Duprey, EPA

Distribution of this Protocol:

John Hawthorne, USS Research

D. R. Cronin, USS Pittsburgh, E/C

Brent Bradford, UDH

T. W. Goettge, Geneva Works

M. R. Curtis, Geneva Works

T. F. Bernarding, Geneva Works

Dick Wyse, Pittsburgh C.L.

R. L. Duprey, EPA

N 122896

BILL OF MATERIAL

DET	REQ'D	PART NO	DESCRIPTION	WT LBS

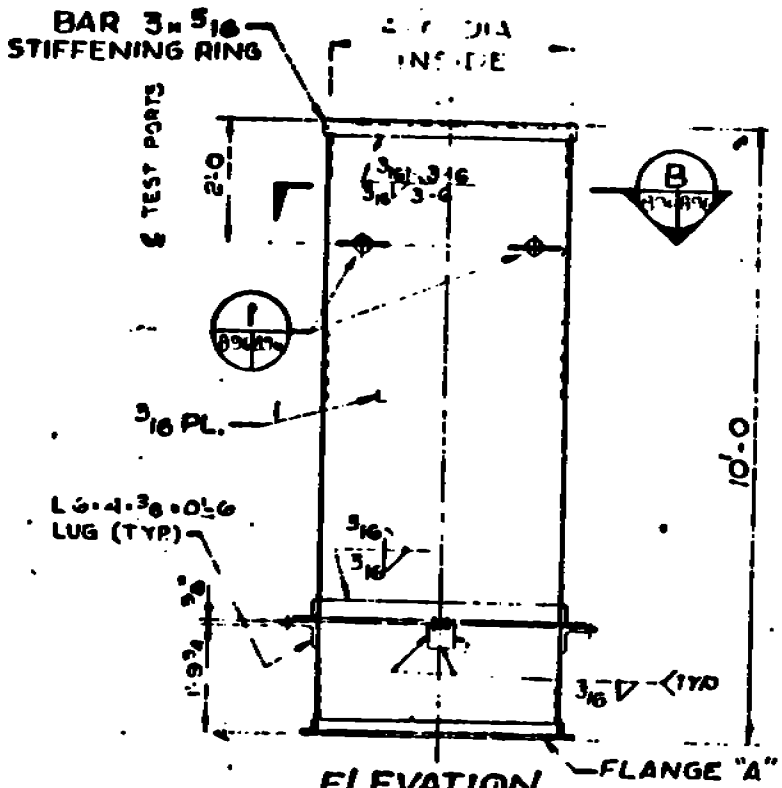

ELEVATION
54 REQ'D.

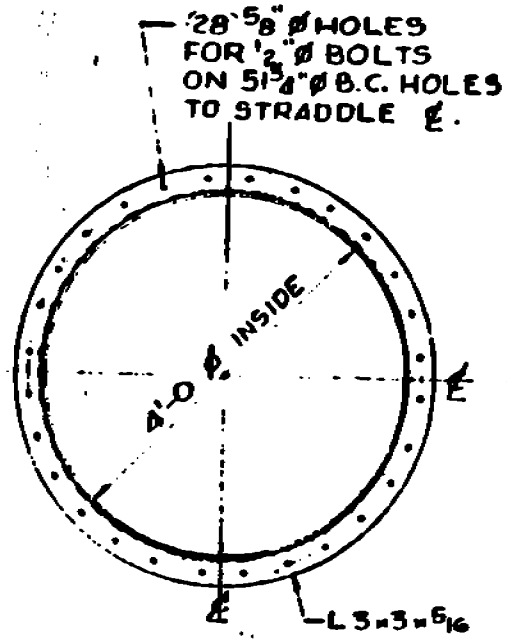

FLANGE 'A'

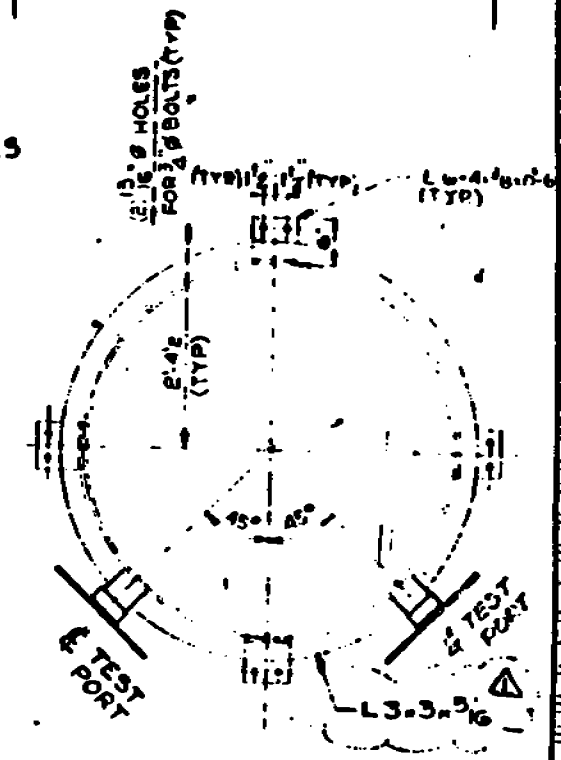

SECTION B

NOTE: FOR FLANGE WELDING SEE SECT. 'A' ON DWG. N122897.

"WORK SAFELY TODAY"

THIS DOCUMENT CONTAINS INFORMATION AND TRADE SECRET INFORMATION AND SHALL NOT BE DISCLOSED OR OTHERWISE WITHOUT THE WRITTEN PERMISSION OF THE MIKROPUL DIVISION OF UNITED STATES FILTER CORPORATION

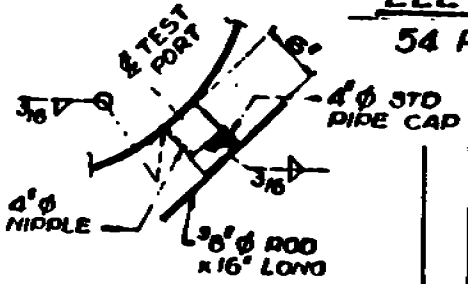

DETAIL

NO	DATE	BY	DESCRIPTION
1	5-11-81		CALLED OUT SECT. B &

REVISION

10'-0 STACK

USED ON ASSEMBLY

TOLERANCES

DRAWN	DATE	CHECKED	DATE	APPROVED	DATE
J.B.	2-23-81		2-24-81	RGD	2-25-81

MikroPul DIVISION

UNITED STATES FILTER CORPORATION
SUMMIT NEW JERSEY 07901

DRAWING NO N122896-B-1 SIZE REV

Chain of Custody:

Plant USS - Geneva Works Coke No. Baghouse

Date Sampled Dec 28-29, 1982 Test Number 1

Run Number Leach Stock No. 11, 16, 12 & 17

Stock No	Sample Recovery Container Code	Description
11	244	Blanks
16	245	252
12	247	253
17	246	254

Person engaged in sample recovery

Signature & Title Melvin R. Kotol, Pres.

Location at which recovery was done USS - Geneva Adm. Lab.

Date and time of recovery

Sample(s) recipient, upon recovery if not recovery person

Signature & Title Same

Date and time of receipt

Sample storage

Laboratory person receiving sample

Signature & Title Same

Date and time of receipt

Sample storage

ANALYSIS

Container Code	Method of analysis	Date & time	Signature
244	Gravimetric	1-1-83 0900	MRK
245	"		
247	"		
246	"		
252 Blank			
253 "			
254 "			

UNITED STATES ENVIRONMENTAL PROTECTION AGENCY

MAR 29 1983

REF: 8AW-AP

Brent L. Bradford, Director
Bureau of Air Quality
Department of Health
Division of Environmental Health
150 W.N. Temple
P.O. Box 2500
Salt Lake City, UT 84110

Dear Mr. Bradford:

We have prepared the attached update (to our letter of April 19, 1982) of EPA's reviews of compliance demonstrations conducted at the U.S. Steel Geneva Works through December 31, 1982. Our indication of a successful compliance demonstration refers only to the periods covered by the tests.

Other tests* conducted prior to agreement on the amended decree, including controversial tests at the nitrogen plant and open hearth stack #2, are considered resolved as a result of the negotiations resulting in stipulated penalties for any violations of which we knew prior to March 25, 1982. If you have any questions or comments regarding our conclusions, please contact Marius Gedgaudas at (303) 837-3711.

Sincerely yours,

~~Ref original~~ signed by Robert L. Duprey

Robert L. Duprey, Director
Air and Waste Management Division

not addressed:
slag spray study
OH vis. mon. study
OH flow balance study
CP CEM cert's.

Attachment

cc: R.W. Pett, U.S. Steel

* OH #2, 4/80, private (not only) test (not observed, adjusted controls during test) (no protocol)
nitrogen plant dryer-cooler, 11+12/80, private (not only) test (not observed, no protocol)
FM soaking pits #2+6, 9/81 (non-complying)
FM reheat furnace #2, 9/81 (")
power house bypass #2/3, 10/81 (")
OH #1,3+8, 11/81 (")
power house bypass #5, 12/81 (")
sinter plant windbox N+S, 2/82 (")

CONCURRENCES

SYMBOL	8AW-AP	G. Phillips		8AW-AP			
SURNAME	[illegible]	D. Woljan	G. Phillips	8AW-AP			
DATE	3/25/83	Mears	3/25	3/28/83			
		Gedgaudas					

OFFICIAL FILE C

EPA Form 1320-1 (12-70)

8AW-AP:MGedgaudas:dl:2501E:03/21/83:3711.

EPA EVALUATION OF U.S. STEEL GENEVA WORKS COMPLIANCE DEMONSTRATIONS

A. Acceptable Compliance Demonstrations

Source	Test Dates	Compliance Status Particulates	Opacity
Open Hearth Stacks #1,3&8 (Retest) of 9/81 non-complying test	1/6-8/82	Compliance	Compliance
Finishing Mill, Soaking Pits #2,6, & 8 (Retest) of #2+6 non-complying tests of 9/81	1/11-14/82	Compliance*	Compliance*
#2 was conducted under abnormal operating conditions — by design of USS, to help set the new standard			
Coke Plant Stack #3	1/19-21/82	Compliance	Compliance
Structural Mill, Reheat Furnace #2 (Retest) of 9/81 non-complying test	1/25-27/82	Compliance*	Compliance*
#2 was conducted under abnormal operating conditions — by design of USS, to help set the new std.			
Coke Plant Stack #2	2/16-18/82	Compliance	Compliance
Powerhouse Stack #5	3/8-10/82	Compliance*	Compliance
Open Hearth Stacks #4,5,6,&7	3/17-25/82	Compliance	Compliance
Coke Plants Offtakes Batteries #3 & 4	4/12-16/82	NA	Compliance (Leaks)
Sinter Plant Windbox Stacks (Retest) to resolve non-complying 2/82 test ***	4/19-20/82	Compliance	Compliance } known abnormal operating conditi **
Coke Plant Stack #4	5/18-20/82	Compliance	Compliance
Sinter Plant Discharge End Stacks; Fugitives	9/13-17/82	Compliance	Compliance } known abnormal operating conditi **

** a private 5/82 test of the windbox stacks was later used to argue for acceptance of these tests

*** ignored herein due to retest of 4/82

Coke Pushing Shed Battery #2 (#1 Hot Idle)	10/19-20/82	Compliance	Compliance (stack and shed fugitives)
Blast Furnace Casthouse #2	11/29-12/3/82	NA	Non-Compliance
Coke Plant Stack #2	12/20-22/82	Compliance	Compliance
Coke Pushing Shed Batteries #3&4 (24 hour coke)	12/28-29/82	Compliance	Compliance (stacks and shed fugitves)

B. Unacceptable Compliance Demonstration

Open Hearth Fugitive Emissions	9/20-24/82	NA	NA

*With Standards in amended Decree

REF: 8AW-TS

A. G. Everist, Inc.

SOTDAT/STEEL LIBRARY SYSTEM

Report Title: Particulate Matter Compliance Tests Conducted at U.S. Steel - Geneva Works, Coke Pushing Baghouse System

Plant and Location: U.S. Steel, Geneva, UT

SCC: 30300303

Testing Date(s): 12/28-29/82

By Whom: TETCo

Stack Test Review Attached: yes

Reviewed By: EPA observed by GCA

Problems Seen by Reviewer: No

Confidentiality Status: Unknown

If status is confidential, list confidential pages or sections:

Source of Determination of the Confidentiality Status:

Report Encoded By:

Date Encoded:

Form Numbers:

Comments:

UNITED STATES ENVIRONMENTAL PROTECTION AGENCY

DATE: April 21, 1983

SUBJECT: Audit of Compliance Demonstration Report for U.S. Steel - Geneva Works Coke Batteries 3 & 4, North Shed Baghouse; December 28-29, 1982

FROM: Dennis M. Woljan, Air Operations Section DMW

TO: John Philbrook, Acting Chief
Utah, Wyoming, and Montana Section

THRU: W. Keith Tipton, Chief
Air Operations Section

I. Introduction

U.S. Steel operates four coke batteries at its Geneva Works in Utah. The emissions, from hot coke, as it is pushed from the oven, are captured in the shed and drawn through a duct system to the baghouse. On December 28-29, 1982, U.S. Steel conducted a series of particulate emission tests on the north shed baghouse. During the test, batteries 3 and 4 were operating on a pushing schedule of 20-21 ovens per turn. Requirements for the compliance demonstration are outlined in the Consent Decree under Paragraph B. 2(f) and Appendices 1.3 and 1.6. Also applicable is the visible emission standard of 20% maximum opacity from the shed area and baghouse stacks (Paragraph B.2 (f)(3)(B), (C)).

II. Summary

Table I presents emission loadings based on the test data reported by the source. Audit computations are made in accordance with Reference Methods 1-5 (40 CFR 60, App. A). Data quality, testing procedures, and quality assurance measures are evaluated using the guidelines provided in Vol. III of the Q.A. Handbook. I recommend that the tests be approved as reported.

III. Report Deficiencies

1. No list of filter numbers and tare weights prior to testing.

2. No description of how operating prarameters were obtained.

3. No discussion or description of the following:
   a) QA procedures (testing, sample handling, analysis and data recording)
   b) recovery and analytical procedures
   c) testing apparatus and sample train
   d) sampling procedures as planned or conducted

4. No VEO data included in the report.

Table I

Coke Batteries 3 & 4, North Shed Baghouse

Stack	Emission Loading (Front Half) reported	audited	standard	Isokinetics reported	audited
	gr/DSCF			%	
11	0.0053	0.0052	0.010		99.4
16	.0034	.0033	.010		99.1
12	.0025	.0024	.010		98.4
17	.0024	.0023	.010		100.8
Avg.	0.0034	0.0033	0.010		N/A

United States Steel Corporation

GENEVA WORKS

P. O. BOX 510
PROVO, UTAH 84603

Dr Zyler
Philbrook

January 24, 1983

RECEIVED
JAN 26 1983
AIR & HAZARDOUS MATERIALS DIVISION

Mr. Robert L. Duprey, Director
Air and Waste Management Division (8AWM)
Environmental Protection Agency
Region VIII
1860 Lincoln Street
Denver, Colorado 80295

Mr. Brent C. Bradford
Director Air Quality
Utah State Department of Health
150 West North Temple, Suite 426
P. O. Box 2500
Salt Lake City, Utah 84110

Marvin

Dear Sirs,

Please find enclosed the compliance test report for Geneva's coke emission sheds Nos. 3 and 4 batteries which was conducted on December 28, 29, 1982.

The process data requested was sent to Paul Wolf of GCA on January 6, 1983.

Forty-four pushes were sampled each of the two days with an average emission level of .0034 grains/DSCF and volume weighed average of .00345 grains/DSCF. Five modules were in operation during the test. There were no visible emission from the shed or the baghouse stacks which exceeded the visible limitation specified in the consent decree.

Reclaiming of the filters was done without using acetone and the data on the "blank" filters was mailed January 18, 1983, as agreed prior to the tests.

Yours very truly,

R. W. Pett
Manager - Engineering
Geneva-Pittsburg Works

JRS:rd

Enclosures

cc: W. E. Bartel wo/e
D. R. Cronin wo/e
T. W. Goettge w/e
W. R. Hawkins wo/e
John Hawthorn w/e
R. F. Wyse wo/e

JAN 2 [illegible]

Connally

STATE OF UTAH
DEPARTMENT OF HEALTH
DIVISION OF ENVIRONMENTAL HEALTH
150 West North Temple, P.O. Box 2500, Salt Lake City, Utah 84110-2500

Marv H. Maxell, Ph.D., Acting Director
Room 474 801-533-6121

James O. Mason, M.D., Dr.P.H.
Executive Director
801-533-6111

DIVISIONS
Community Health Services
Environmental Health
Family Health Services
Health Care Financing

OFFICES
Administrative Services
Community Health Nursing
Management Planning
Medical Examiner
State Health Laboratory

January 28, 1983
533-6108

Mr. Marius Gedgaudas
Air & Waste Management Division (8 AW)
Environmental Protection Agency
Region VIII
1860 Lincoln Street
Denver, Colorado 80295-0699

RE: UDH Inspectors Observation Compliance Stack Test of Baghouse Shed, Coke Batteries #3 & #4 at U.S. Steel, Geneva Works, Orem, Utah

Dear Mr. Gedgaudas:

Enclosed are copies of two memorandums by members of our enforcement staff who observed the initial compliance stack test of the baghouse sheds covering #3 and #4 coke batteries at U.S. Steel, Geneva Works at Orem, Utah, on December 28-29, 1982.

Sincerely,

Montie Keller

Montie Keller,
Environmental Health Manager
Enforcement/Engineering
Bureau of Air Quality

JES:wml
Enclosures (2)
2313

An Equal Opportunity Employer

DEPARTMENT OF HEALTH
150 West North Temple, P O. Box 2500, Salt Lake City, Utah 84110

James O. Mason, M.D., Dr.P.H.
Executive Director
801-533-6111

DIVISIONS
Community Health Services
Environmental Health
Family Health Services
Health Care Financing and Standards

OFFICES
Administrative Services
Health Planning and Policy Development
Medical Examiner
State Health Laboratory

January 7, 1983
533-6108

MEMORANDUM TO: Brent C. Bradford, Executive Secretary, Utah Air Conservation Committee

THROUGH: Montie Keller, Section Manager, Enforcement/Engineering

FROM: David McNeill, Air Quality Technician

SUBJECT: EPA Method 5 Stack Test Conducted on the North Shed Baghouse for Coke Oven Batteries #3 & #4; U.S. Steel, Geneva Works, Utah County

On December 28, 1982, Jim Stevens and I observed the EPA Method 5 test conducted on modules 11 and 16 of the baghouse serving the pushing shed covering coke oven batteries #3 and 4 at the U. S. Steel Geneva Works, Utah County. We arrived at 7:45 a.m. and the first push was scheduled for 8:06 a.m. However, U. S. Steel was unable to get the quench car from the 7:36 a.m. push into the quench tower until about 8:30 a.m., so the test did not begin until 8:40 a.m. The ovens were pushed in the same order as the attached schedule, although the times were closer together to make up the time. The contractor for this test was Timp Environmental Testing Company. Mel Kitchen was the lead tester.

The inlet temperature for the baghouse was 105°F and the stack temperature for the first push was 55°F. By the end of the test, the inlet temperature had risen to 135-140°F and the stack temperature had risen to 78°F.

In the pre-test meeting, members of our staff were told that the shed was being repaired in the area between batteries #2 and #3 where the doors are brought to be cleaned after the push. During the day, I went under the shed to observe the pushes of ovens #1,3,and 5 on battery #3 and oven #64 on battery #2 because of their relative juxtaposition to the shed gaps. I observed no emissions going out the openings. However, I noted eight oven doors on battery #3 with emissions from leaks around the doors, including one very bad one. There were 5 - 10 leaking doors under the south shed. Because of steam from the quench car and quenching stack, I could not see any leaking doors on battery #4. I did observe operators cleaning the doors and the openings in the ovens. I asked Jim Starley, the U. S.

Steel representative for the test, why there were so many leaking doors, and he said that it was because the battery had been in not idle for such a long time and had been recently brought back into production. Also, he said that the people brought back to work were not well aquainted with the low emissions practices incorporated during their absence.

When we arrived, I checked the pressure drops on the operating modules of the baghouse. Jack Harrington from the vendor (Micropul) was attempting to thaw the photohelic gauge on module #11 which was being tested. The pressure drops on the other modules were between three and four inches of water. The cleaning cycles are operated to maintain a pressure drop in that range.

At 9:30 a.m., I went down to re-check the pressure drops of the modules. The photohelic for #11 read less than 1" H_2O. I talked with Mr. Harrington and Paul Wolfe from GCA who was representing the EPA, the lead agency, about this possible problem. Mr. Harrington said that during the previous week, the lines to the photohelic had frozen and broken the automatic cycling mechanism. Therefore, they were operating module #11 in the manual cleaning mode, which made it cycle every 60 seconds, cleaning the bags almost continuously and leaving no caking on the bags. Mr Wolfe said that he would accept whatever our office decided.

I conferred with Dave Kopta and Jeff Dean by phone. Dave said that he would suggest testing another module, but that since the test was in progress, the cleaning system for module #1 should be shut off. He also thought that we should obtain an agreement from U. S. Steel that they would not declare the test results unacceptable if the grain loading proved too high and blame it on equipment failure. I spoke with Jim Starley and he agreed to these conditions. Paul Wolfe and I assured Mr. Starley that our agencies would not reject the test of module #11 due to the in-operation of the cleaning mechanism as long as plant personel manually maintained the pressure drop on the module below 4" H_2O. I re-checked the pressure drops on the modules throughout the remainder of the test and they remained in the 3 - 4" H_2O range except for #11, which never got above 1" H_2O.

I checked the integrity of the shed and found no leaks in the roof or walls except in the area under repair between the north and south sheds. Batteries #2,3, and 4 were operating, and there were two door cars in operation. The only quench car in operations used the north quench stack for all three batteries.

In the baghouse control room, I noted that the fans on modules #11,16, and 17 drew 90 amps, #12 drew 80 amps, and #20 drew 105 amps. Mr Harrington said that they were probably all drawing about 90 amps, but

the meters were not reading correctly. The manifold low pressure warning light was on, but Mr. Harrington said that the low level in the storage silo made the low pressure acceptable. Mr. Harrington and Jim Starley said that the control room is only checked once per day, and if anything goes wrong with one of the modules, the only alarm is a small one in the control room. Mr. Harrington said that he has gone into the control room and found the alarm sounding, but, because of the remoteness of the alarm and frequency of inspection, nobody was aware that a problem existed.

At 12:02 p.m., while I was on the north end of the north shed, I noted extremely dense (80-90% opacity) grey and brown emissions from the slag side of the #2 Blast Furnace. By 12:16, emissions were down to a steady grey/white smoke with 40% opacity. Then, from 12:17 to 12:18:30, emissions from the west side of the high roof monitor next to the #2 Blast Furnace went from a dark brown smoke (90% opacity) to light brown smoke (70% opacity). By 12:19, all emissions were down to 0% opacity. From 12:27:30 to 12:32, I observed thick black smoke (90-100% opacity) being emitted near the base of the #2 Blast Furnace. At 12:32, emissions quickly dropped to near 0% opacity. I asked Jim Starley for a explanation of what had occured to cause such high emissions. He called the furnace operator and told me that he was told that they had been having problems with the gas feed to the hot metal trough flame suppression system, but that it was basically just a bad cast.

As with the test of the south baghouse, we left before the end of the test, and therefore, were unable to observe the final leak checks of the equiptment. However, a representative from GCA was on hand at the end of the test and said he would observe the checks.

DM:wml
2152

DEPARTMENT OF HEALTH
DIVISION OF ENVIRONMENTAL HEALTH
150 West North Temple, P.O. Box 2500, Salt Lake City, Utah 84110-2500

Mary H. Maxell, Ph.D., Acting Director
Room 474 801-533-6121

James O. Mason, M.D., Dr.P.H.
Executive Director
801-533-6111

DIVISIONS
Community Health Services
Environmental Health
Family Health Services
Health Care Financing

OFFICES
Administrative Services
Community Health Nursing
Management Planning
Medical Examiner
State Health Laboratory

January 20, 1983
533-6108

MEMORANDUM TO: Brent C. Bradford, Executive Secretary, Utah Air Conservation Committee

THROUGH: Montie Keller, Section Manager, Enforcement/Engineering

FROM: James Stephens, Air Quality Technician

SUBJECT: Particulate Emission Testing for Compliance of the North Baghouse, Serving No. 3 and No. 4 Coke Oven Pushing Shed at U.S. Steel, Geneva Works, Orem, Utah

On December 28, 1982, Dave McNeill and I observed the first run of the demonstration for compliance testing of the north baghouse serving No. 3 and No. 4 coke oven pushing sheds. On December 29, 1982, Mike Behling and I observed the second run of the test. Those present for the test were: Paul Wolf and Mathew Sutton for GOA, Jack Harrington for Mikropol, Jim Starley for U.S. Steel, Mel Kitchen and two of his Timp Environmental Testing Company (TETCO) testing crews, with visual emission observers.

The compliance testing was done on four of the ten baghouse modules. Each module stack was circular with a 60 inch diameter, and had two testing ports. Twenty-two traverse points were determined necessary for each port for a total of 44 traverse points per module. The first test run involved testing baghouse module 11 and 16. The second run involved testing modules 12 and 17. One of two testing crews was assigned to each module, and testing was done simultaneously.

The particulate compliance testing was done according to EPA Method 5.

Continuous visual emission observations of the No. 3 and No. 4 coke ovens pushing sheds were evaluated by TETCO observers, according to EPA Method 9. Evaluations showed opacities of 0%.

Stack sampling was done intermittently for 2 1/2 minutes, during coke oven pushes. Only 44 coke oven pushes were required for the test per day. The test required 110 minutes of actual testing time per run. (Each coke oven produces ten tons of coke) During non-sampling time, the sampling probe was removed from the baghouse module testing port and the nozzle capped.

Normal coke production was maintained during the sampling period. No "sticker ovens" or "green pushes" were noted. Sampling was suspended occassionally because of problems with the pushing machine, the quench car, electrical power loss, and poor radio communication. However, any coke oven pushes delayed, or missed were made up.

Ambient air temperatures during the morning hours of the test were below freezing. Necessitating heat lamp to be attached to the impinger box, to avoid freezing during non-sampling periods.

I made visual observaiton inside the coke sheds and counted three leaking coke oven doors. Observation of the oven door was made from a side view.

Isokinetics were calculated occassionaly throughput both test runs and were 95%-98%, for each sampling train. The baghouse modules stack gas was 7% moisture and 98°F. EPA was the lead agency during the test, but because of bad weather in Denver, aircraft flights were cancelled, and EPA representatives were not able to attend the test. Since we left at 3:30 p.m. each day of the test, we were not present for the sampling train leak checks or laboratory clean up.

Mikropul service engineers, Jack Harrington, told me that they were experiencing problems with the photohelic cycling apparatus on the number 11 baghouse module. The problem caused the unit to cycle the cleaning mode too often. Because of that problem, the automatic photohelic cycling apparatus was turned off a few days before the test started, and the cleaning cycle was operated manually, until repairs could be made. I asked him if he thought that the manual cycling operaton of the baghouse module would affect the test in any way. He indicated that it would not, since the module cleaning cycling, though being done manually, was done according to the pressure differential gauges.

During the second day, troubles were discovered in the baghouse module air lock system, and particulate collecting duct. Moisture was getting into the system. The air lock motor fans and duct work was a mass of frozen coke dust and ice. Jack Harrington had not immediate solution, and only speculated as to how the moisture was entering the system.

JES:wml
Attachment: Stack Test Field Notes
2249

GENEVA WORKS

United States Steel Corporation

WESTERN STEEL DIVISION

GENEVA WORKS
P. O. BOX 510
PROVO, UTAH 84601

Phillbrook
Marias Connally

January 18, 1983

RECEIVED
JAN 24 1983
AIR & WATER ... S
MATERIALS ... ON

Mr. Robert L. Duprey, Director
Air and Waste Management Division (8AWM)
Environmental Protection Agency
Region VIII
1860 Lincoln Street
Denver, Colorado 80295

Attention: Keith Tipton

Mr. Brent C. Bradford
Director Air Quality
Utah State Department of Health
150 West North Temple, Suite 426
P. O. Box 2500
Salt Lake City, Utah 84110

Dear Sirs,

Please find enclosed the results of the "blank" filter tests performed during the compliance tests on Geneva's Nos. 3 and 4 coke emission sheds. These tests were agreed to in the phone conversations of December 23, 1982. The "blank" filters were treated identically with the test filters and the results indicate the "blank" filter weight loss is well within the limits of the Q.A. manual. Test filter weights are a part of the test report which will be submitted as soon as it is available.

Yours very truly,

R W Pett

R. W. Pett
Manager - Engineering
Geneva-Pittsburg Works

JRS:rd

Enclosure

United States Steel Corporation
Engineering - Steel

Plant Engineering
Geneva-Pittsburg Works

MEMO OF BLANK AND TEST FILTERS
GENEVA NORTH COKE SHED - 12/31/82 to 1/1/83

Requirement for TARE Weighing Filters - page 16

Section 3.4.3.3.21 of Book III QA manual.

1. Dry filter at 105° C for 2 to 3 hours.
2. Followed up desiccation for 2 hours and weighing to constant weight. Use 6 hour desiccation between weights.

Tetco Followed the Practice of:

1. Oven dry 6 hours at 105° C.
2. 6 hours in desiccator then weigh.
3. 6 hours in desiccator then second weight.

First Day's Test Filters and Blanks

Filters No. 244 - Stack 11
Filters No. 245 - Stack 16

Blank filters No. 252, No. 253

1. Left in oven 24 hours.
2. Left in desiccator 47 hours.
3. Weighed first time for final weight.
4. 16 hours in desiccator then final weight.

Filter No. 252 - Blank			Filter No. 253 Blank	
Initial	.7888 gr.		.7882 gr.	
First Final	.7891	= .0003	.7884	= .0002
Second Final	.7888	= .0000	.7880	=(.0002)
$\bar{X}$ =	.00015		$\bar{X}$ = .0000	

Both less than ± 5 Mg

Second Day's Test - Filters and Blanks

Filter No. 246 - Stack 17
Filter No. 247 - Stack 12

Blank Filter 254

1. Left in oven 16 hours.

2. Left in desiccator 31 hours.

3. Weighed first time for final weight.

4. 16 hours in desiccator then final weight.

Filter No. 254 Blank

Initial	.7903 gr.	
First Final	.7905	= .0002
Second Final	.7901	=(.0002)
$\bar{X}$ =	.000	

Less than ± 5 Mg.

Record of Clamped Filter Blank

1. No. 237 designated as this blank and was placed in oven at 105° C for 6 hours and placed in the desiccator for 6 hours then weighed - first weight .7942 grams.

2. This filter was then placed in filter holder and the clamp nut tightened identically to a test filter. This was left in the holder for 3+ days in the laboratory.

3. The filter holder nut was loosened and the filter placed in a petri dish. The small amount of filter that remained on the filter gasket was scrapped off and placed on the filter.

4. The filter was then placed in the oven for 6 hours. Then removed and placed in the desiccator for 6 hours then weighed = .7935 grams, put back in the desiccator for 4 hours and reweighed. Final weight = .7935

Loss was .7942 - .7935= .0007 grams or .088% loss.

Prepared for

U.S. ENVIRONMENTAL PROTECTION AGENCY
Region VIII
Denver, Colorado

Assignment Managers

Connally Mears Keith Tipton

Contract No. 68-01-6316
Technical Service Area 1

Assignment 42 Assignment 31

FINAL

REVISED OBSERVATION REPORT

PARTICULATE EMISSIONS TESTING FOR COMPLIANCE - U.S. STEEL GENEVA WORKS

COKE BATTERY NOS. 3 and 4
PUSH CONTROL SHED AND BAGHOUSE
(December 28, 29, 1982)

May 1983

Prepared by

Matthew Sutton
Paul Wolf

GCA CORPORATION
GCA/TECHNOLOGY DIVISION
Bedford, Massachusetts

CONTENTS

Tables iii

1. Introduction 1
   Process Observations. 4
   Control Equipment Observations. 7
   Stack Test Observations 16

Appendices

A. Test Protocol for the Coke Battery Nos. 3 and 4 Push Shed and Baghouse Compliance Test 17

B Coke Battery Nos. 3 and 4 Push Control Baghouse Operating Condition Observations and Flow Recordings 31

C Stack Test Observation Checklist 35

TABLES

Number		Page
1	Comparison of Coke Battery Nos. 3 and 4 Operating Conditions - Proposed and Actual During the 28-29 December Compliance Test at U.S. Steel/Geneva	5
2	Comparison of Coal Quality as Measured by Ultimate Analysis During the 28-29 December Compliance Test at U.S. Steel/Geneva	8
3	Coke Battery Nos. 3 and 4 Process Operating Data Recorded During the 28-29 December Compliance Test at U.S. Steel/Geneva	9
4	Ovens Pushed and Gas Flows in the Coke Shed Evacuation System for 28 December 1982 at U.S. Steel/Geneva	10
5	Ovens Pushed and Gas Flows in the Coke Shed Evacuation System for 29 December 1982 at U.S. Steel/Geneva	12
6	Comparison of Coke Battery Nos. 3 and 4 Push Control Baghouse Operating Conditions - Proposed and Actual During the 28-29 December Compliance Test	15

SECTION 1

INTRODUCTION

At the request of EPA Region VIII, GCA observed process and emission control operations along with stack testing procedures during the coke battery Nos. 3 and 4 pushing compliance test at U.S. Steel Geneva Works 27-30 December 1982. The compliance test consisted of EPA Method 5 particulate emission measurement on four of the ten baghouse module stacks, and EPA Method 9 visible emission observations (VEOs) of the shed system and baghouse stacks. During the test period, only battery Nos. 2, 3 and 4 were operating.

GCA's duties were to record battery and baghouse operating conditions and to verify that stack testing and VEOs performed by U.S. Steel's contractor, Timp Environmental Testing Company (TETCO), were done in accordance with methodologies specified by the test protocol (Appendix A). This test protocol was written by USS to conform with their consent decree requirements. GCA provided two observers: one for process observations and one for stack test observations. They were assisted by personnel from the Utah Department of Health (UDH).

A pretest meeting was conducted at Geneva Works on 27 December 1982. GCA personnel were originally scheduled to attend this meeting and to relate the specific concerns of EPA Region VIII regarding the test protocol. Weather delays altered this schedule, such that UDH personnel were informed of EPA Region VIII's concerns so that UDH could communicate these to USS at the meeting. GCA personnel held an inpromptu meeting on 28 December with Jim Starley (USS), to reaffirm and discuss each of the EPA concerns. The following concerns/resolutions were discussed at each of these meetings during which a revised protocol was issued by U.S. Steel (12/27/82; App A):

- Modules proposed for testing were Nos. 16 and 11 on 12/28/82, and Nos. 12 and 17 on 12/29/82.
- Number of ovens pushed per shift; 29.
- The coking cycle would be changed from 30 hrs to 24 hrs. This cycle was changed during the weekend of 26-27 December due to the poor quality coke that was being produced.
- Safety requirements for all personnel involved in the testing,
- Visual emissions observers would read continuously and be positioned at the following locations:

- Random observations of the baghouse stack

- On the battery, watching battery No. 3 - coke side shed

- On the ground, adjacent to and watching battery No. 3 - coke side shed

- On the battery, watching battery No. 4 - coke side shed

- On the ground, adjacent to and watching battery No. 4 - coke side shed

- VEOs would be read from 8:00 am until emissions from the final push have been sampled.

- Only five baghouse modules would be run during the test period resulting in a maximum shed exhaust rate of 150,000 cfm. This represents 30,000 cfm per module or 10,000 cfm less per module than during the south-side tests. This data was detailed in a letter dated December 30, 1982; a copy of which was sent to M. Gedgaudas of Region VIII.

- Consistent with 24 hr coking, the number of pushes to be sampled would be 44 (total for 2 batteries) rather than the originally scheduled 36. This would make the total test time 110 minutes of actual sampling time.

- USS agreed to sample "stickers," or substitute another oven push if the respective agencies requested. EPA asked that USS not suspend sampling during subsequent pushes while a sticker was being dug out. (Note: during the testing period, GCA observers did not observe any stickers; nor did USS state that any occurred.)

- USS contented that they would not include green pushes in the determination of emissions. They clarified this by stating that although particulate testing could not practically be stopped, VEO readings would not be allowed. USS stated that green pushes are not normal operating conditions. The agreement that was made was that in the event of a green push, VEOs would result. EPA could then request those results. EPA did not approve of USS position on green pushes. (Note: during the testing period, GCA observers did not observe any green pushes; nor did USS state that any occurred.)

- USS noted that the door repair area between battery Nos. 3 and 4 would be open while work was conducted. USS stated their interests in not evaluating VEO's from this potential source. There were no emissions observed from this position. It is GCA's opinion that this was pointed out to the observers due to a similar circumstance observed during the south-side tests.

- USS made reference to the adherence of testing procedures to Methods 1-5 and appropriate sections of EPA Quality Assurance Handbook Volume III. This was a verbal restatement of Section 9 of their protocol submitted at the pretest meeting (App A)

- In response to the EPA request that arose from the last test series, blank filters would be taken and analyzed. Three of these filters would be designated prior to the test; Nos. 252 and 253 for run 1 and No. 254 for run 2.

- Two partially charged ovens were operating on battery No. 4. These two ovens (1 and 66) would most likely be sampled during the testing. The pushing schedules listed one of these ovens scheduled for the testing.

- As was agreed upon during the last test series, orsats would not be performed during each run if analysis during the first run showed the gas to be composed of air.

- The battery No. 3 and 4 sheds would be exhausted for the purpose of collecting emissions from the quench car as it passes through the shed on the way to the quench tower.

The following people participated in the compliance test:

- U.S. Steel
  - M. Buckner - test coordinator
  - J. Starley - test coordinator
  - R. Harris - stationed on battery top
- UDH
  - J. Dean - pretest only
  - J. Shephens - stack test observer
  - D. McNeil - stack test observer
  - M. Behling - stack test observer
- MikroPul
  - J. Harrington - control equipment observer
- GCA (EPA Contractor)
  - M. Sutton - process observer

- P. Wolf - control equipment and stack test observer

- TETCO (U.S. Steel Contractor)

  - M. Kitchen and Stack Test/VEO Crew

The following data was requested by GCA; and was received by mail after the conclusion of the test program for the 27-30 December test days:

- Coke Oven Temperature Report (push side and coke side), battery Nos. 3 and 4, 28-29 December 1982;

- Coke Plant Ovens - Charging and Pushing Report, all turns 28-29 December 1982;

- Chemical Laboratory - Coke Plant (27-29 December 1982);

- Daily Operating Report, 28-29 December 1982;

- Daily Heating Report, battery Nos. 3 and 4, 28-29 December 1982;

- Circular Charts for 28-29 December 1982 for;

  - fuel gas temperature, battery Nos. 3 and 4

  - fuel gas pressure, battery Nos. 3 and 4

  - stack draft, battery Nos. 3 and 4

  - fuel gas volume, battery Nos. 3 and 4

- Strip Charts for 28-29 December 1982 for;

  - exhaust duct annubar flow measurement (from baghouse control room).

PROCESS OBSERVATIONS

The GCA process observer was responsible for documenting the coke battery Nos. 3 and 4 operating conditions in order to verify that the conditions were consistent with those specified in the test protocol. In addition, the process observer verified that the U.S. Steel topside observer was accurately notifying the test crew of the push start times, documented the frequency of partially charged ovens and stickers, and verified that visual emission observations were in accordance with EPA Method 9.

Process Operating Conditions

Table 1 compares the coke battery Nos. 3 and 4 operating conditions stated in the test protocol with those observed during testing. The range of

TABLE 1. COMPARISON OF COKE BATTERY NOS. 3 AND 4 OPERATING CONDITIONS - PROPOSED AND ACTUAL DURING THE 28-29 DECEMBER COMPLIANCE TEST AT U.S. STEEL/GENEVA

Process parameter	Proposed during test		Actual during test	
	Battery No. 3	Battery No. 4	Battery No. 3	Battery No. 4
Number of Ovens Unavailable	2	2	2	2
Number of Ovens Partially Charged	0	2	0	2
Ovens Blank Off	2	2	2	2
Approximate Length of Coking Cycle in General (Hrs.)	24	24	24	24
Charging sequence for the ovens	-10 (21-31-41)		-10[a] (21-31-41)	
Amount of Coal charged and length of a charge in general, partially charged ovens	13.7 tons; 2-2 1/2 min. Approx. 10 tons About 1 min.		NR	
Battery pressure, as measured at the Askania house	5-6.5 mm Hg		6.5-9 mm Hg[a]	
Quantity and quality of oil sprayed on the coal prior to charging	1-3 pts/ton No. 2 fuel oil and an unstated quantity of waste oil		1.35	
Oven temperature range, including variations from oven to oven and/or through the coking cycle	No. 2 Battery 7th Flue Avg. Range PS: 1950°, 2000° CS: 2000°, 2050° Nos. 3 and 4 Battery 50° lower		PS: 1890°, 1942° CS: 1960°, 2040°	
Frequency of change of gas flow direction through the checkers	30 min.		30 min.	

(continued)

TABLE 1 (continued)

Process parameter	Proposed during test		Actual during test	
	Battery No. 3	Battery No. 4	Battery No. 3	Battery No. 4
Bulk density	44-47 lb/CF at Larry Car		45.7-47.1	
Pulverization	79-83% - 1/8 in.		83-86	
Stability (Std. ASTM D-3402 - 76 Test)	56-58		54.7[b]	
Hardness (Std. ASTM D-3402 - 76 Test)	68-72		61.1[b]	
Moisture	Avg. 5.3% may vary depending on weather		4.7-5.6	
Ovens Unavailable	61, 62	46, 47	61, 62	46,47
Ovens Partially Charged		1, 66		1, 66

[a]Based on observations taken by GCA.

[b]Based on data from Daily Operating Report on 12-29-82.

NR = not reported.

battery pressure was greater than proposed, however, the proposed range does not consider the routine fluctuations which occur during each charge. The GCA observations represent three instantaneous readings and, therefore, do not represent average readings for an integrated period of time.

The general coal characteristics specified in the protocol varied slightly from what was actually observed. This was true for pulverization, stability and hardness characteristics. The overall effect of these minor differences is believed by GCA to have a negligible effect on coke shed emissions.

Table 2 compares the coal quality measure by ultimate analysis. Unfortunately, the data supplied by U.S. Steel only included data for two of the seven components specified by the protocol. The ash and water, for which data did exist, were less than that expected by USS. GCA would predict that these differences would not have a significant effect on push emission levels.

Table 3 summarizes the coke battery Nos. 3 and 4 process operating conditions documented by GCA during testing. There appears to be no abnormalities based on comparison with conditions observed by GCA during previous Geneva Works coke plant testing.

Pushes During Testing

Table 4 and 5 lists the ovens pushed during the overall test period with a total which represent the number of ovens pushed while tests were in progress. Note that U.S. Steel anticipated 29 ovens per shift at the protocol meeting. The partially charged ovens were noted accordingly.

The method used by U.S. Steel to call out the pushes to the testing crew included a 2 minute warning, announcement at the start of the push and at the finish of the push. This information was relayed from the topside observer. During the second day of the testing, two radio calls were missed, resulting in a testing delay, as no testing could occur without proper communication. The oven pushes that were missed were the 1154 push of oven 43 battery No. 3 and the 1203 push of oven 54 battery No. 4.

CONTROL EQUIPMENT OBSERVATIONS

The GCA process and stack test observers shared duties to document the operating conditions of the push control system. The process observer noted any occurrences of emissions escaping capture by the push side shed. The stack test observer documented operating conditions of the baghouse.

Shed Capture

Detection of emissions escaping capture by the shed were often complicated by intermittent emissions from the topside charge lids and stand pipes. Steam from the coke wharf on the west side and the northern quench tower also periodically obstructed observations. TETCO positioned two VE observers on the ground, one adjacent to battery No. 3 and another adjacent to

TABLE 2. COMPARISON OF COAL QUALITY AS MEASURED BY AN ULTIMATE ANALYSIS DURING THE 28-29 DECEMBER COMPLIANCE TEST AT U.S. STEEL/GENEVA

Coal component	Range in Percent	
	Expected[a] during test	Actual[b] during test
Carbon	76.70 - 79.61	NR
Hydrogen	4.41 - 6.13	NR
Nitrogen	1.68 - 1.82	NR
Ash	6.80 - 7.20	6.8 - 7.3
Sulphur	.62 - .67	.54 - .56
Oxygen	6.10 - 9.04	NR
Fixed H_2O	5.947 - 6.890	4.7 - 5.5

[a]As stated in the test protocol.

[b]Based on limited data on a U.S. Steel "Chemical Laboratory - Coke Plant" data sheet for one sample. This data was provided for the two days of testing.

TABLE 3. COKE BATTERY NOS. 3 AND 4 PROCESS OPERATING DATA RECORDED DURING THE 28-29 DECEBMER COMPLIANCE TEST AT U.S. STEEL/GENEVA

Process parameter	Data recorded during testing[a]	
	Battery No. 3	Battery No. 4
Heater Room		
Gas pressure (mm H_2O)	175-190	170-185
Gas consumption (% of 400 K CFH)	32.5	32.6
Flue gas temperature (°C)		
PS	190-215	210-220
CS	210-220	220-225
Fuel gas temperature (°C)	53	53
Stack Draft (mm H_2O)		
PS	9-11	10-11.5
CS	9-10.5	9.5-10
Topside		
Collector main pressure (mm Hg)		
North - PS	7.0-7.2	6.5-6.9
CS	6.7-7.0	7.2-7.4
South - PS	7.0-7.3	7.3-7.6
CS	6.8-7.2	7.5-8.0
Flushing liquor (psi)		
North	11-12	15
South	15-20	15-17
Steam pressure (psi)		
North	98-102	103-106
South	100-106	105

[a]Based on three topside readings and four heater room observations.

TABLE 4. OVENS PUSHED AND GAS FLOWS IN THE COKE SHED EVACUATION SYSTEM FOR 28 DECEMBER 1982 AT U.S. STEEL/GENEVA[a]

Push time	Battery and oven No.			Battery ~~Oven~~ and shed gas flow (x 1000 cfm)	
	2	3	4	3	4
841			52	55	130
848	9				
853			62	80	100
901	19				
905		68		95	80
916		1		80	100
921	39				
927			4	60	130
933		11		80	100
938			14	85	130
945		21			
950		24			
1003		31		80	100
1012		41		80	100
1020		34		50	130
1039	59				
1047		51		80	100
1100		3		80	100
1105		44		55	128
1114	69				
1118			54	50	128
1125	2				
1131		13		50	128
1142	32			92	100
1144		23		92	100
1151	52				
1155		33		100	70
1208			64	72	128
1222			6	72	128
1230			16	72	128
1237	62				
1246		43		70	100
1254		53		70	100
100		63		70	100
108			26	80	130
110	4				
126		5		100	80
129	14				
135		35		100	80

(continued)

TABLE 4 (continued)

Push time	Battery and oven No. 2	3	4	Battery ~~Oven~~ and Mod ~~gas~~ flow (x 1000 cfm) 3	4
148			36	75	128
158			56	75	128
204	34				
215		25		75	100
226		35		75	100
231			66(M)	75	110
242	54				
245			8	75	130
251	64				
256			18	75	130
303		45		75	97
308			28	70	128
316		55		74	100
321			38	75	128
330		65		50	100
337		48		50	125
345	6				
410			58	60	100
416	16				
425			68	50	128
432	36				
440		7		80	100
449	46				
Total pushes during test			44		

[a]During the 28 December 1982 testing of Modules 11 and 16, Modules 11, 12, 16, 17, and 20 were operational. The tests were organized to include a total of 44 pushes on battery Nos. 3 and 4. The battery No. 2 push schedule is shown only to reflect the schedule the push equipment which is responsible for both battery Nos. 2 and 3.

(M) = partially charged oven.

TABLE 5. OVENS PUSHED AND GAS FLOWS IN THE COKE SHED EVACUATION SYSTEM FOR 29 DECEMBER 1982 AT U.S. STEEL/GENEVA[a]

Push time	Battery and oven No.			Battery ~~Oven~~ and shed gas flow (x 1000 cfm)	
	2	3	4	3	4
822	39				
829	49				
835			52	95	128
842	59				
850		68		95	125
852	69				
903		1		95	80
909	2				
918			62	55	128
923		11		95	75
931			4	50	125
938		21		95	125
944			14	50	125
951	32				
958		31		95	80
1012		41		95	80
1021			24	55	125
1037	52				
1045		51		100	75
1057		3		50	75
1103			34	50	125
1110		13		50	75
1117			44	50	128
1124	62				
1130		23		95	80
1136	4				
1143		33		95	80
1149	14				
1154		43[b]		95	80
1203			54[b]	50	130
1211			64	50	130
1219			6	50	130
1230	34				
1237		53		100	70
1244		63		100	70
1252	54				
100			16	40	95
106	64				
113			26	48	125

(continued)

TABLE 5 (continued)

Push time	Battery and oven No. 2	3	4	~~Oven~~ Battery and ~~gas~~ Mod flow (x 1000 cfm) 3	4
120	6				
126			35	48	125
137		5		95	77
147		15		95	77
156	16				
205		25		100	70
216		35		100	70
233			56	48	125
242			66(M)	48	125
248	46				
253			8	48	125
259		45		95	50
305			18	50	125
309		55		94	75
315			28	50	125
325[c]		65		95	75
325[c]			38	94	75
335			35	90	125
414	66				
424	8				
434	34				
458			58	75	130
504		7		75	100
512		17		75	100
515			1(M)	75	125
525		27		95	75

Total pushes during test 44

[a]During the 29 December 1982 testing of Modules 12 and 17, Modules 11, 12, 16, 17, and 20 were operational. The tests were organized to include a total of 44 pushes on battery Nos. 3 and 4. The battery No. 2 push schedule is shown to reflect the schedule of the push equipment which is responsible for both battery Nos. 2 and 3.

[b]Ovens pushed while testing was not in progress.

[c]Operator log error accounting for two pushes described at the same time. One was actually pushed at 319.

(M) = partially charged oven.

battery No. 4. Additionally, two VE observers were positioned topside on the catwalks adjacent to each battery, one from TETCO and one from U.S. Steel. An additional observer rotated making observations every one-half hour to allow rest time for the other four observers. In the opinion of GCA, all observations were performed within the guidelines of EPA Method 9 constraints.

Pushes occuring at the north end of battery No. 3 were observed on both days of testing. Observations were made through the opening on the west side of the shed between battery Nos. 3 and 4. Light emissions (0 to 5 percent opacity) were observed escaping through small cracks on the north east side of the shed roof, above battery No. 4. U.S. Steel reported that such cracks are caused by deterioration of the rubber seals between the roof sections. Although these cracks are difficult to repair due to there location, repairs are performed on a regular basis. Emission levels were greatest when pushing ovens directly below the cracks (i.e., ovens 64-54 on battery No. 4). Additional emissions did appear to linger in the shed but did not escape. It is GCA's opinion that emissions from the push appeared to be effectively collected by the shed duct. ?

Baghouse Operation

The design and actual operating conditions of the baghouse are presented as Table 6. The baghouse operation had several minor problems during the test period. Individually these problems were not a concern, however the composite of all these problems may be indicative of poor maintenance. NOTE

On 28 December 1982 the baghouse pressure actuating system of Module 11 froze. There appeared to be some indication that the electrical system associated with the actuating system had been having problems prior to the test schedule. USS and Micropul personnel told the GCA observers of the problem. In order to expedite the sampling schedule, an agreement required that someone would watch the magnehelic gauge (measuring the pressure drop across the baghouse) to assure that the ΔP did not reach the 3 to 4 in. actuation set point. At no time during the sampling did the ΔP exceed 1.5 in. H_2O. This 3 to 4 in. set point was the one used on all other baghouse modules.

Also on 28 December 1982, the No. 16 baghouse pulse jet cleaning system continuously actuated itself. The initial concern was that there was a leak in the pressurized air line resulting in the bags never entirely cleaning themselves. However, the cause was that someone had reset the timer that regulated the duration of blast air. The result was analogous to the original conjecture: the bags were never completely cleaned. The effect of the problem would appear to have an adverse effect on emissions from the module, as it would be difficult to establish a proper filter cake. This, however, was not noted in the visible emissions. NOTE

On 29 December 1982, there was a noticable difference between the baghouse flow during the night and that during the day. The flows observed during the day were abrupt whereas the flows during the night were quite uniform. This was explained in two ways by Jim Starley.

TABLE 6. COMPARISON OF COKE BATTERY NOS. 3 AND 4 PUSH CONTROL BAGHOUSE OPERATING CONDITIONS - PROPOSED AND ACTUAL DURING THE 28-29 DECEMBER COMPLIANCE TEST

Control parameter	Proposed during test[a]	Actual during test[b]
Baghouse temperature (°F)	100 - 150	119 - 135
Pressure drop (in. W.C.)[e]	3 - 4	1-4
Pulse-air pressure (psig)	100 - 120	NR
Flow rate (1000 CFM)		
Battery No. 3 Shed	NR	50 - 93
Battery No. 4 Shed	NR	75 - 125
Total	NR	135 - 180
Fan Current (amperes)		
Day 1[c] - Module 11	NR	90 - 100
- Module 12	NR	80 - 90
- Module 16	NR	90 - 100
- Module 17	NR	90 - 95
- Module 20	NR	100 - 105
Day 2[d] - Module 11	NR	90 - 95
- Module 12	NR	80 - 90
- Module 16	NR	90 - 95
- Module 17	NR	90 - 99
- Module 20	NR	100

[a]As stated in the test protocol.

[b]Based on GCA recorded observations. Detailed readings are attached in Appendix B, Table B-1.

[c]Modules 11, 12, 16, 17 and 20 were operating on 28 December 1982; testing was performed on Modules 11 and 16.

[d]Modules 11, 12, 16, 17 and 20 were operating on 29 December 1982; testing was performed on Modules 12 and 17.

[e]At no point did the overall ΔP exceed 4 in. H_2O. Random observations were made by the GCA testing observer. Cleaning mechanisms were actuated when ΔP was within the range of 3-4 in. H_2O.

NR = Not Reported

1. The louvers that direct the air flow are positioned by a mechanism associated with pushing. There is a pin in the louver on the battery No. 3 flow system that had sheared. (Note: there was every indication that this pin had sheared prior to the testing.)

2. There are two systems that connect the push to the damper changes; the older of the two systems is a radio controlled system that is located in the coke car. Most recently, USS has developed a system that electronically changes the damper once the battery door is opened. USS contention was that they have been trying to adopt this new system for full time use, but there have been many problems.

The last observed problem involving the baghouse operation, occurring on 29 December 1982, was the observation of steam exiting the baghouse. This was first observed early in the day (930-1000). The steam plume lasted for approximately five minutes after a push. It was determined to be quench steam that had backed up and was drafted by the coke shed evacuation system. USS remedied the situation quickly after this observation. At 11:00, the quench tower was cleaned out by spraying water down its length, and all quenching was performed on the south side quench tower. The cleaning lasted a little less than an hour, although the quenching continued on the south side until 3:00 p.m. Jim Starley indicated that quenching continued on the south side due to track work being performed on the north side. (Note: the GCA observers checked many times for this work, and no work was observed.)

NOTE

One problem that was directly related to the quench steam drafting through the baghouse was the freezing of the ash removal pipes and air interlock system of the baghouse. The moisture of the steam combined with the cold ambient temperatures caused the extensive freezing that was observed. This freezing had no effect on the baghouse operation or the tests. This freezing was observed at about 4:00 p.m. when USS began to dismantle this system to remove the ice from the system.

Tables 4 and 5 (previously presented) provide data that were reduced from the strip chart detailing flows as measured by annubars in the duct work. This data was reduced from the strip chart (provided in Appendix B) which was black and white copy of an original three color strip chart. The data that is detailed in Tables 4 and 5 differs in some respects from that detailed in Table B-1. This is because Table B-1 lists instantaneous readings whereas Tables 4 and 5 describe reduced data. It is GCA's opinion that the only way that an accurate and reliable detailing of these flows can be made with confidence is to request a color copy of this strip chart.

STACK TEST OBSERVATIONS

In the opinion of GCA, there were no problems with the stack test procedures significant enough to affect the integrity of the data being generated. The observation checklist is included as Appendix C. Also on 29 December, the 1154 and 1203 pushes were not sampled due to problems with radio communication. The testing of these pushes was picked up later in the day.

APPENDIX A

TEST PROTOCOL FOR THE COKE BATTERY NOS. 3 AND 4 PUSH SHED AND BAGHOUSE COMPLIANCE TEST

[illegible] all [illegible]?

(see notes in protocol file)

PARTICULATE EMISSION TESTING FOR COMPLIANCE - U. S. STEEL GENEVA WORKS

PROVO, UTAH

COKE PLANT PUSHING EMISSION CONTROL BAGHOUSE AND FUGITIVE TEST PROTOCOL

I. Project Organization and Responsibility

The following personnel and the testing contractor are presently anticipated to be involved in the testing program. EPA and UDH may have their own personnel or contractor observe all phases including the process.

Testing Contractor: Tetco

(3) 5 fans - fans 16 & 11 will be tested
(1) 150,000 ACFM per side
(2) No percentage available on partial
1:66 are partially charged

USSC Personnel:

Boyd C. Erickson, General Supervisor, Environmental Control Engineering

Jim R. Starley, Sr. Environmental Control Engineer - USSC Coordinator

Max Buckner - USSC Coordinator

During these tests only USSC personnel listed above or an assigned personnel from the operation are authorized to answer or obtain answers to pertinent questions on the process conditions or the test protocol.

II. Project Description

This protocol outlines the specific test procedures to be employed in demonstrating compliance with the mass, opacity, and flow rate limitations of the Geneva Consent Decree as specified in Appendixes 1.2, 1.3 and 1.6 as applied to Nos. 3 and 4 coke battery pushing-emission-control baghouse. This protocol specifically covers testing the north baghouse and Nos. 3 and 4 batteries.

when all of pushing will the flows be lowered?
who will judge a green push?
How will they be determined?
when will O inf

Geneva employs two identical pushing-emission-control systems, each consisting of two shed-type enclosures (one per battery) for the capture and containment of pushing emissions and one Pulsaire-type baghouse for two batteries, comprised of 10 identical modules for dust removal. Cleaned gases are discharged to the atmosphere via separate fans and exhaust stacks located on each module. The number of modules in service during the compliance demonstration will be determined by USSC and this information will be given to the agencies in the pre-test meeting on Monday, December 27, 1982. The testing procedure will include accumulating process data and production data as well as testing for particulate emissions using EPA Method 5. Fugitive emissions will be evaluated during each test run using Method 9. The total particulate will be determined under current operating levels with Nos. 3 and 4 batteries on 24-hour coking cycles to demonstrate compliance of the subject emission points with limitations provided in consent decree case No. C-80 paragraph B.2(f)(1)(2)(3) and (4).

III. Test Schedule

Compliance test for the pushing emission controls requires the testing of four (4) out of the 10 stacks on each of two baghouses. Testing will start on two of the stacks of the north baghouse and will be run simultaneously. One test run will be made on two stacks and then a second test run on the other two stacks, the second pair of stacks will be completed the following day. Each test will take approximately 10 hours to sample the 44 pushes. A pre-test meeting will be held at 3:00 P.M. on Monday, December 27, 1982. The tentative time schedule for testing activities is as follows:

when did this coking cycle b.

On Monday, December 27, 1982, at 08:00 a.m. Contractor and USS Representatives will meet at Geneva Administration Building in the environmental control lab for

orientation, safety and final test preparation meeting. The contractor will set up his equipment in Geneva's Air Quality laboratory and on the stack for taking preliminary data. The lab crew will clean all probes and set up a complete set of equipment. Then the crew will begin preliminary tests for moisture, temperature and velocities on two of the stacks of the north baghouse. When complete, secure equipment for next day's testing.

On December 28, 1982, shortly before 0800, pick up equipment and move to the stacks on the north baghouse. Begin test run No. 1 and continue until 44 pushes have been sampled. Sample for 2 1/2 minutes at each of 44 points in the two stacks being tested. There will be continuous VEO's made of the sheds during the test run by four observers and one relief observer rotating every half hour to provide relief. This same schedule. will be repeated the next day, December 29, on the other two stacks to be tested on the north baghouse.

IV. Test Procedures

A. General

Stack testing will follow Appendix 1.6 of the consent decree and Appendix 1.3 as modified in Appendix 1.6, Methods 1-5.

B. Other Detail Procedures

1. Prior to any testing, simultaneous velocity traverses will be performed at a suitable location in the outlet duct from each shed before the baghouse, to verify attainment of the maximum exhaust rate specified in the Consent Decree for the shed system and to correlate the continuous measurements of the annubar probe device for each battery. This determination will be made with 10 modules in operation. However, mass-emissions

has this been performed? Is it available

measurements for compliance purposes will be performed with the number of modules in operation that has been determined by USSC pursuant to Par. B.2(f)(7)(A).

2. To help assure the representativeness of mass-emission rates determined for each baghouse pushing-emission-control system, one test run will be performed on each of four modules. Selection of the stacks to be tested has been made by consulting with agency personnel prior to test set-up period which will allow the contractor adequate time to install his test equipment prior to start-up. Simultaneous testing, although not a requirement of this protocol, may be performed if desired.

3. Sampling will be performed in accordance with Methods 1 through 5 of 40 CFR, Part 60, Appendix A, for the determination of volumetric flow rate and particulate mass emissions. 44 point points (22 per diameter), will be sampled at the rate of one point per coke-oven push in each exhaust stack tested (stack drawing attached). Sampling will commence at the start of the push and continue for a duration of 2-1/2 minutes, resulting in a total sampling time of 110 min. Based on an estimated pushing rate of five ovens per hour, approximately ten hours will be required to complete one test run. During non-sampling periods, the sampling probe will be removed from the exhaust stack.

4. If the vacuum exceeds the value to maintain isokinetic flow during the tests, the filter will be changed in the field with an extra loaded filter holder which will be ready if needed.

5. No cyclone will be used ahead of the filter.

6. Continuous VEO's will be made of fugitive emissions from the shed as long as the light permits. It is likely that VEO's will have to conclude prior to the end of each day's Method 5 sampling because of insufficient light. If this occurs, no additional VEO time will be added after the Method 5 sampling has been completed. The decision to stop VEO's will be made in the field by the USSC coordinator upon consultation with EPA and UDH representatives. An integrated sample of the flue gas will be taken from the exhaust line after the orifice of the dry gas meter during the first run. These gases will be analyzed with an orsat to determine the molecular weight. If the samples are essentially air, sampling will be discontinued on further tests.

7. Any necessary preparation and clean-up by the contractor will be performed in the laboratory at Geneva Works Administration Building. The laboratory work and analyses will be done by the contractor as soon as possible after each test in Geneva's Air Quality Lab.

8. Back half will be determined by the UDH Method dated October 19, 1981. Back half particulate should be included in the report but not used to determine compliance with State Regulations.

9. Testing will be performed only during periods of normal production and at 24 hour coking times on batteries 3 and 4. Partially charged ovens will be counted the same as normally charged ovens because emissions appear the same as with a normal size push. The temperatures maintained on partially charged ovens are essentially the same as the normally charged ovens. Green pushes and sticker ovens are considered abnormal conditions and will not be sampled. In the event of any non-representative plant activity or any equipment malfunction, testing will be temporarily suspended until the problem is corrected and normal production resumes. This determination will be made in

all sample sticker

the field by USSC coordinator upon consultation with EPA and UDH representatives.

Three filters will be designated as "blank" filters and will be identified and weighed initially with the test filters. The "blank" filters will be dried and dessicated in the same manner as the test filters, but will remain in their covered petri dishes while the test filters are on the stack. Final weights will be taken on the "blank" filters and the test filters at the same time. The "blank" filters will be used as control samples for the check on the analytical balance.

10. Data Reduction

Data reduction will include the calculation of volumetric flow rate for each module tested. Individual and average dust concentrations will be calculated on the basis of front-half particulate weight. Compliance with the emission standard in par. B.2(f)(3)(A)(i) shall be determined by flow weight averaging the test results in grains/DSCF for all stacks tested.

V. Process Information

A. Specific Data

The process conditions that exist now, as proposed during the compliance demonstration and as can best be projected subsequent to the compliance demonstration are as follows:

Nos. 1, 2, 3 and 4 Coke Plant Batteries
Process Operating Conditions

	Now Batt. No.				Proposed During Test Batt. No.				Projected Following Test Batt. No.			
	1	2	3	4	1	2	3	4	1	2	3	4
Identity of Ovens Unavailable		14				14	2	2		14	2	2
Identity of Ovens Partially Charged	Idle Hot	6	Idle Hot	Idle Hot	Idle Hot	6	0	2	Idle Hot	6	0	2
Ovens Blank Off		14				14	2	2		14	2	2

	Now				Proposed During Test				Projected Following Test			
	Batt. No.				Batt. No.				Batt. No.			
	1	2	3	4	1	2	3	4	1	2	3	4
Approximate Length of Coking Cycle in General (Hrs.)	Idle Hot	22	Idle Hot	Idle Hot	Idle Hot	22	24	24	Idle Hot	22	24	24
Applies to All Batteries												
Charging sequence for the ovens	-10 (21-31-41)				-10 (21-31-41)				-10 (21-31-41)			
Amount of Coal charged and length of a charge in general, partially charged ovens.	13.7 tons 2-2½ min. Approx. 10 Tons About 1 min.				13.7 tons 2-2½ min. Approx. 10 Tons About 1 min.				13.7 tons 2-2½ min. Approx. 10 Tons About 1 min.			
Battery pressure, as measured at the Askania house.	5-6½ mm Hg				5-6½ mm Hg				5-6½ mm Hg			
Quantity and quality of oil sprayed on the coal prior to charging	1-3 pts/ton #2 fuel oil & waste oil				1-3 pts/ton #2 fuel oil & waste oil				1-3 pts/ton #2 fuel oil & waste oil			
Oven temperature, including variations from oven to oven and/or through the coking cycle.	#2 Batt. 7th flue avg. temp. PS CS 1950° 2000° 2000° 2050° #3 & 4 50° lower				Same				Same			
Frequency of change of gas flow direction through the checkers	30 min.				30 min.				30 min.			
Bulk density	44-47 #/CF at Larry Car				Same				Same			
Pulverization	79-83% - 1/8"				Same				Same			
Stability (Std. ASTM D-3402 - 76 Test)	56-58%				Same				Same			
Hardness (Std. ASTM D-3402 - 76 Test)	68-72				Same				Same			
Moisture	Avg. 5.3% May vary depending on weather.				Same				Same			

	Battery No. 1	2	3	4
Ovens Unavailable	Idle Hot	12, 13, 24, 25, 26, 28, 29, 45, 57, 58, 23, 42, 43, 44, 22	61 & 62	46 & 47
Ovens Partially Charged*		35, 36, 41, 46, 47, 62, 33, 63	-	1 & 66

Quality of coal charged, as measured by an ultimate analysis.

	Range in Percent
Carbon	76.70 - 79.61
Hydrogen	4.41 - 6.13
Nitrogen	1.68 - 1.82
Ash	6.80 - 7.20
Sulphur	.62 - .67
Oxygen	6.10 - 9.04
Fixed H_2O	5.947 - 6.890

*Partially charged ovens - the reason for short or modified charges is because of wall damage to the ovens. The procedure in charging these ovens, is to charge the No. 3 hole then the No. 2 hole followed by charging No. 1 until it hangs up and then cut the charge off and then level. When pushed emissions are about the same.

B. Process data that is recorded and is available is as follows:

1. Stack draft in mm H_2O.
2. Flue temperature.
3. Oxygen analyzer.
4. Fuel gas volume.
5. Fuel gas temperature.

6. Gas pressure - Fuel
7. Charging-pushing report.
8. Oven schedules.
9. Daily operator's report.
10. Spraying log.
11. Flue leakage log.
12. Daily battery emission monitoring data.
13. Daily heating report.
14. Collector main pressure.
15. Oven temperature report.
16. Ultimate analysis of the coal.

C. Control Facilities Operating Parameters

1. Baghouse temperature. 100°F - 150°F.
2. Pressure drop. - 3" - 4" W.C.
3. Bag cleaning frequency - automatic ~~with~~ by pressure drop actuation.
4. Pulse-air pressure 100-120 psig.
5. Flow rate from each of No. 3 and No. 4 battery sheds and total flow rate during pushing and non-pushing modes.
6. Bag material - polyester - felt.
7. Bag weight - 16 oz./sq. yard.

VI. Test Area Air-Cloth - 7.01

The test area shall include the Nos. 3 and 4 coke batteries, process control center for both batteries and the north baghouse stacks and control center. Also areas appropriate for visible observations outside the coke plant proper and the laboratory area for preparation, clean-up and laboratory activities located in the administration building at Geneva Works.

VII. The Visible Emissions Observation Program Method

Visible emission observations will be recorded by certified smoke observers in accordance with 40 CFR, Appendix A, Method 9. Random observations will be made of the exhaust stacks being tested but continuous visual emission observation will be made by four observers of emissions escaping from any part of either shed. These readings will be made as specified in par. B.2(f)(6) and (7)(B) and Appendix 1.2 of the consent decree. An additional observer will rotate making observations every one-half hour to allow rest time for the other four observers.

VIII. Contacts by Agencies or Their Representatives During Tests and Process Observations

1. The contractor will have complete responsibility for all test work and analysis, including preparation and clean-up.
2. The U. S. Steel representative will make all necessary clearances for entering and leaving the plant.
3. The contractor may be continuously monitored by UDH, EPA and USS representatives but no information will be given out or made available either verbally or in writing to any person or organization without first clearing with the USSC coordinator in charge of the test.
4. All agencies agree to provide notice to USSC before arranging to make any observations performed under this protocol. Notice shall be sufficient to give USSC an opportunity to have a representative present.

5. The agencies agree that agency observers will make all reasonable effort to identify and report to USSC conditions in the field which may constitute a basis for invalidating the tests while in the field. However, each agency reserves its right to assess the validity of inspections based on later review and evaluation.

6. The agencies agree that agency observers will act as observers only, and will not physically participate in any of the pretest, testing, cleanup, and laboratory procedures, including personally making any adjustments or changes to the operating facilities.

7. During the inspections and observations of the process, agency representatives and/or their representatives, shall not question any operating personnel. If information is needed, which is pertinent to the testing evaluation, contact will be made with the USSC coordinator, who will obtain the required data. USSC shall make a coordinator available at all times during the inspections.

IX. Quality Assurance (General)

1. Stack testing will be conducted according to Methods 1-5 and appropriate sections of EPA Quality Assurance Handbook Vol. III. Method 9 will be followed as closely as possible. All observers will have been certified within the last six (6) months.

2. UDH, EPA and USSC personnel will meet to agree on definitions, inspection methods and reporting to assure accuracy and quality assurance.

X. Reporting

Reports will be prepared by USS contractor and copies of raw data and calculations will be submitted as verification of compliance. All requested process and production data will be provided by U. S. Steel to EPA and UDH.

Distribution of test reports:

R. W. Pett, Chief Engineer - Geneva-Pittsburg Works

John Hawthorne, USS Research

D. R. Cronin, USS Pittsburgh Environmental Control

T. W. Goettge, Division Supt. Coke and Coal Chemicals - Geneva Works

M. R. Curtis, Division Supt. Maintenance and Utilities

B. C. Bradford, Bureau of Air Quality, UDH

R. L. Duprey, EPA

Distribution of this Protocol:

John Hawthorne, USS Research

D. R. Cronin, USS Pittsburgh, E/C

Brent Bradford, UDH

T. W. Goettge, Geneva Works

M. R. Curtis, Geneva Works

T. F. Bernarding, Geneva Works

Dick Wyse, Pittsburgh C.L.

R. L. Duprey, EPA

N 22896

BILL OF MATERIAL

DET	REQ'D	PART NO	DESCRIPTION	WT LBS

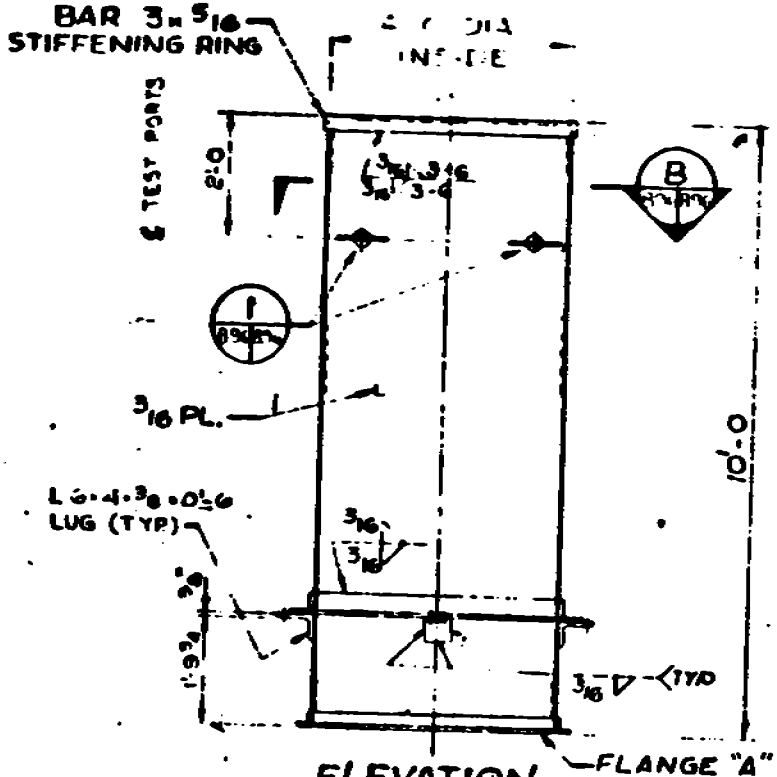

ELEVATION
54 REQ'D.

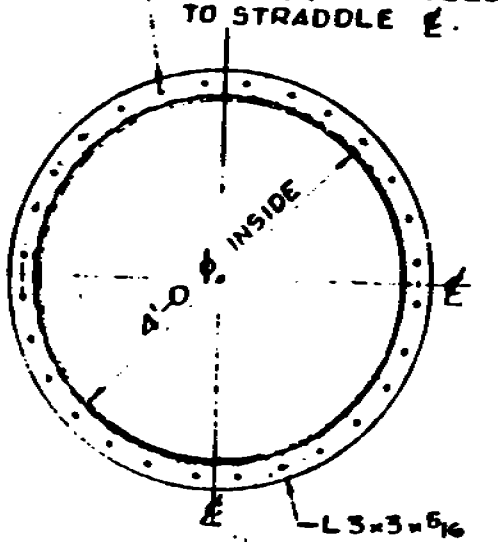

FLANGE 'A'

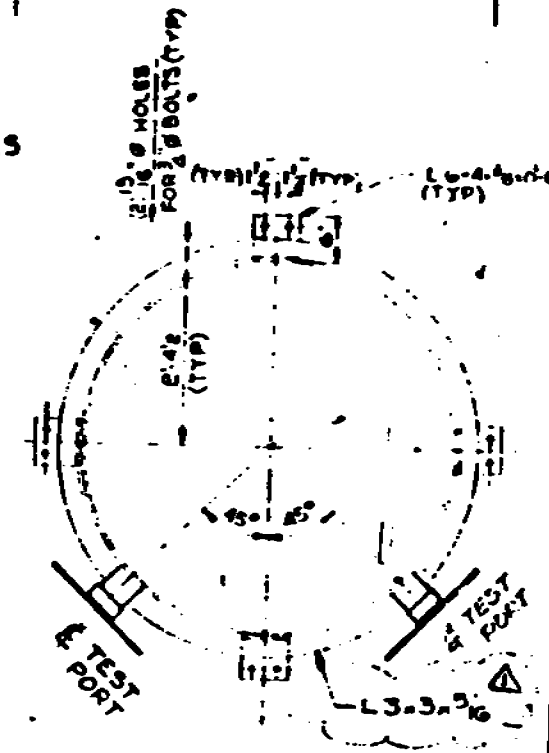

SECTION B

NOTE: FOR FLANGE WELDING SEE SECT. A ON DWG. N122897.

WORK SAFELY TODAY

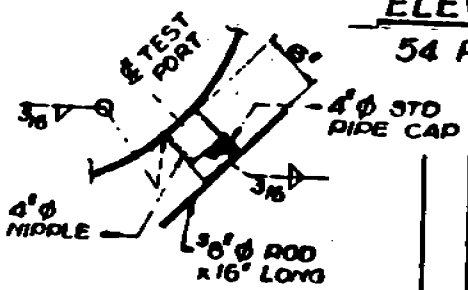

DETAIL 1

NO	DATE	BY	DESCRIPTION
1	5-11-81		CALLED OUT SECT. B & A

REVISION

10'-0 STACK

USED ON ASSEMBLY

TOLERANCES

DRAWN	DATE	CHK'D BY	DATE	APPROVED	DATE	DRAWING NO	SIZE	REV
	2-23-81		2-24-81		2-25-81	N122896-B-1		

MikroPul DIVISION

UNITED STATES FILTER CORPORATION
SUMMIT NEW JERSEY 07901

2/4 = FDD

30

APPENDIX B

COKE BATTERY NOS. 3 AND 4
PUSH CONTROL BAGHOUSE OPERATING CONDITION OBSERVATIONS AND FLOW RECORDINGS

TABLE B-1. BAGHOUSE OPERATING DATA FOR COKE BATTERY NOS. 1 AND 2 BAGHOUSE DURING THE DECEMBER 1982 COMPLIANCE TEST

Date	Time	Temp. (°F)	Flow Rate (1000 CFM)			FAN Current (amps)				
			Shed #3	Shed #4	Total	Module 11	Module 12	Module 16	Module 17	Module 20
12/28/82	920	131	NR	NR	135,000	100	90	100	95	105
	1017	135	75,000	100,000	151,000	90	80	90	90	100
	1010	131	74,000	100,000	151,000	90	80	90	90	100
	1210	125	72,000	100,000	160,000	90	80	90	90	100
	1325	126	75,000	100,000	155,000	90	80	90	90	100
	317	132	50,000	125,000	160,000	90	80	90	90	100
	338	132	NR	NR	160,000					
12/29/82	810	128	NR	NR	155,000	90	85	90		
	951	133	90,000	80,000	160,000	90	80	90	90	100
	1106	129	93,000	75,000	165,000	90	80	90	90	100
	1330	124	NR	NR	160,000	95	90	95	95	100
	1400	NR	70,000	98,000	180,000	90	80	90	90	100
	1602	119	75,000	100,000	153,000	90	80	90	90	100

NR = Not Recorded

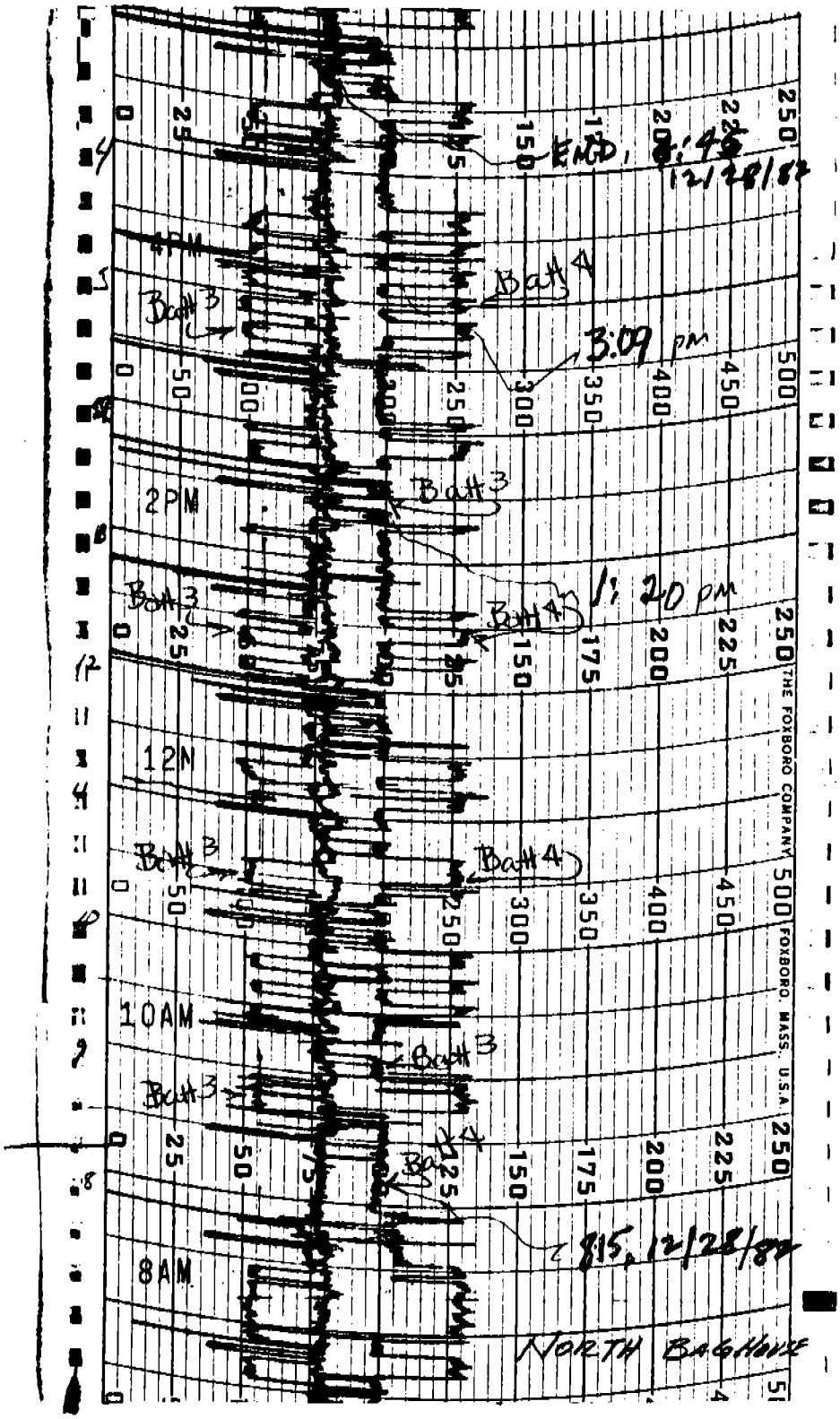

Figure B-1. North coke sheds flows, December 28, 1982.

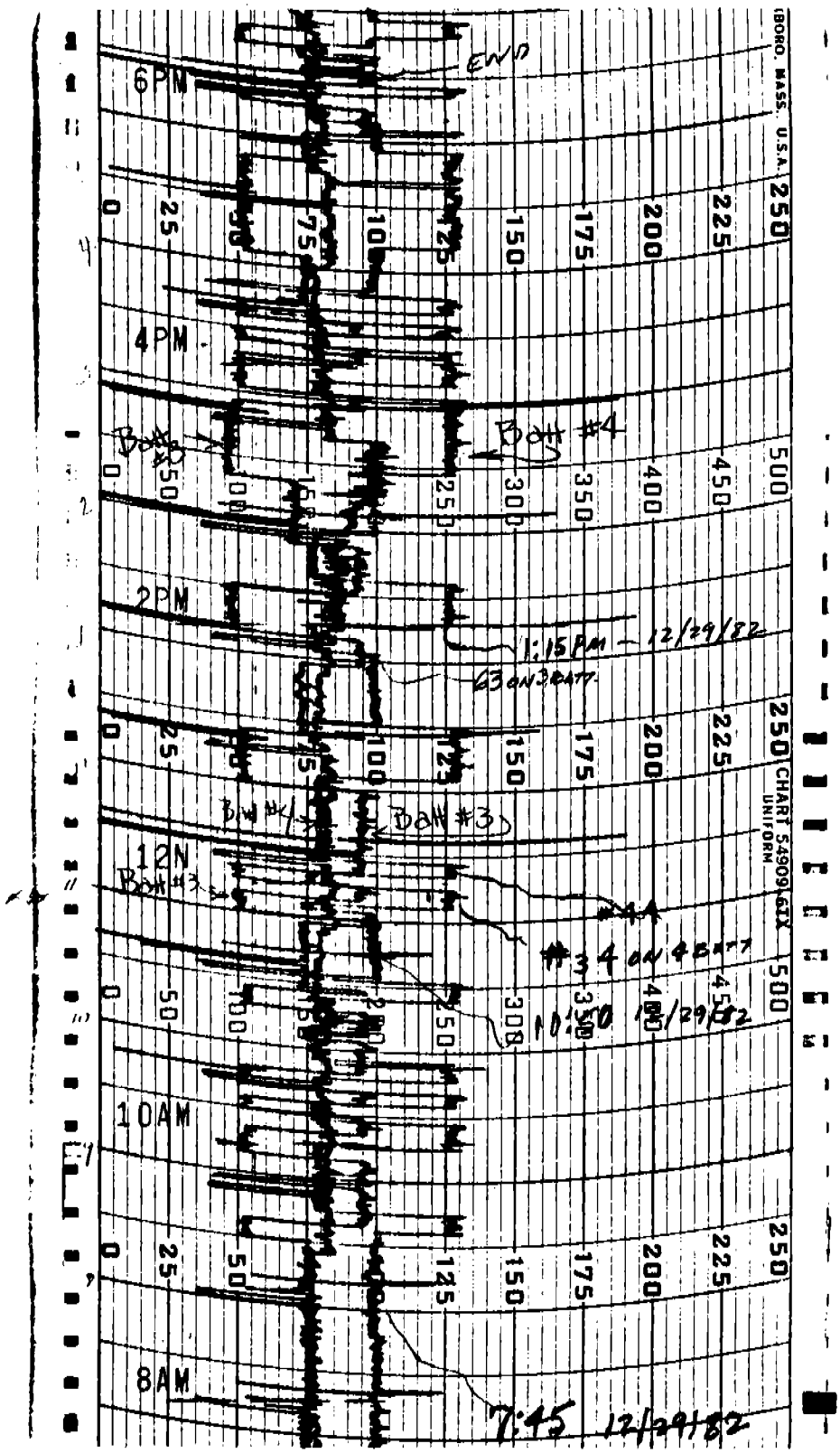

Figure B-2. North coke shed flows December 29, 1982.

APPENDIX C

STACK TEST OBSERVATION CHECKLIST

File No. _____

Facility: US Steel Geneva Works

Source: Coke Battery Pushing Shed - Northside

TEST PROGRAM OBSERVATION

A. Sketch of sample location (if different from pretest report). Include: duct dimensions, location of disturbances and ports, X-section showing sampling points. Upstream: _____

Downstream: _____

B. Stack or duct condition:

1. material of construction Metal

2. external corrosion NO, 3. leaks NO

4. internal corrosion NO, 5. cake or pile up of particulate in sampling port area NO; removed before test —

6. insulation NO, 7. thickness —

8. nipple: a. ID 4", b. length 5.25"

c. capped yes, d. corrosion or particulate cake _____; removed before test _____

e. flush with inside wall yes

C. Method 1 Sampling Points:

1. Distance from nearest upstream disturbance .5 diameter.

Paul S. W. G. — Signature of Observer

GCA — Affiliation of Observer

1/24/83 — Date

Signature of Test Team Representative

Date

2. Distance from nearest downstream disturbance 2 D.D., _____ diameter.

3. Number of sampling points 44

4. Number of ports 2 points per point 22

5. First traverse point from wall ≥1.0 inch yes

6. Rectangular grid configuration NO

7. Cyclonic flow verification yes

   average null point angle < 10°

8. Cyclonic flow sampling procedure —

D. Method 2 - Velocity:

1. Pitot tube: type "S" ✓, other _____, cp _____

2. Manometer ✓, magnehelic _____, range(s) _____, scale division 1-10" .

3. Temperature measurement: thermocouple on probe ✓, temperature readout _____.

E. Method 3 - Dry Mol Weight, Gas:

1. Multipoint ✓, single point _____, integrated bag ✓, grab sample ✓, other _____, type of bag _____, type of probe _____.

2. Pump: One way squeeze _____, diaphragm _____, other _____, sampling rate _____.

3. Is there a filter in line NO

4. Type of condenser NONE

5. Analysis: Orsat ✓, Fyrite _____, instrumental _____, from bag ✓, from stack _____.

Paul S. W. [illegible] — Signature of Observer

GCA — Affiliation of Observer

1/24/83 — Date

_____ Signature of Test Team Representative

_____ Date

F. Method 4 - Moisture:

1. Estimate of moisture 2%

2. Preliminary run 1%

G. Method 5 - Particulate:

1. Nozzle: design buttonhook material stainless steel

2. Probe liner: borosilicate _____, quartz _____, stainless steel ✓, Inconel 600 _____, Incoloy 825 _____, other _____, water cooled _____.

3. Pitot tube, nozzle, thermocouple, integrated orsat line, proper configuration and separation yes.

4. Number of impingers 4 contents 1 Water, 2 Water, 3 —, 4 Silica.

5. Barometer: aneroid ✓, mercury _____, location _____.

6. Meter box: $\Delta H_@$ not available Y _____ calibration date _____

7. $\Delta H_@$ from most recent calibration _____ $\Delta H_@$ from check against dry gas meter _____.

8. Nomograph check:

If $\Delta H_@ = 1.80$, TM = 100°F, $\%H_2O = 10\%$, $P_s/P_m = 1.00$, C = _____(0.95).

If C = 0.95, TS = 200°F, DN = 0.375, Δp reference = _____(0.118).

Align Δp = 1.0 with ΔH = 10; @ Δp = 0.01, ΔH = _____(0.1).

9. For nomograph setup:

Estimated meter temperature _____°F, estimated value of P_s/P_m _____

Paul SW 9 — Signature of Observer

GCA — Affiliation of Observer

1/24/83 — Date

_____ Signature of Test Team Representative

_____ Date

Estimated moisture content NZ %

How estimated previous tests.

C Factor _____ Estimated Stack Temperature _____ °F

nozzle diameter = _____ desired; _____ actual.

10. Filter medium type glass fiber

11. Impinger, condenser cooling system IMPINGERS

12. Silicone grease yes

13. Filter holder: Borosilicate glass yes,

other _____.

Filter support:

Glass frit with silicone rubber gasket yes

Glass frit _____

Stainless steel screen _____

Neoprene rubber gasket _____

Other _____

14. Brushes: Nylon bristles yes, other _____.

15. Storage bottles: glass _____, polyethylene ✓,

teflon _____, other _____.

16. Capliner: teflon _____, other ✓.

for use better but polyethylene caps

17. Petri dishes: polystyrene _____, glass ✓,

polyethylene _____.

Paul Wall
Signature of Observer

GEA
Affiliation of Observer

1/24/87
Date

Signature of Test Team Representative

Date

H. Notes: Include (1) General Comments; (2) Changes to Pretest agreement with with justification; (3) Identify (manufacturer) and describe condition of sampling equipment; (4) any abnormal occurrences during test program. (Additional pages attached: Yes _____, No _____.)

Paul Shelf
Signature of Observer

GCA
Affiliation of Observer

1/24/83
Date

Signature of Test Team Representative

Date

R = Recommended

M = Mandatory

		Test Run 1	Test Run 2	Test Run 3	Sootblow
	Date				
1. Train setup	filter ID	4"	4"		
	filter weight				
	filter checked for holes	✓	✓		
	filter centered	✓	✓		
	nozzle clean	✓	✓		
	nozzle undamaged	✓	✓		
	nozzle diameter (in.) calibration sheet submitted	NO	NO		
	probe liner clean	✓	✓		
	probe markings correct	✓	✓		
	probe heated along entire length	✓	✓		
	impingers charged	✓	✓		
	impingers iced	✓	✓		
	meter box leveled	✓	✓		
	pitot manometer zeroed	✓	✓		
	orifice manometer zeroed	✓	✓		
	filter box at temp.	✓	✓		
	all ball joints lightly greased	✓	✓		
	all openings capped	✓	✓		

Paul S. Wolf — Signature of Observer

GCA — Affiliation of Observer

1/24/83 — Date

Signature of Test Team Representative

Date

		Test Run 1	Test Run 2	Test Run 3	Sootblow
	Date				
2. Train leak check at nozzle: (≤0.02 cfm @ 15 in. Hg initial. Intermediate and final at highest vacuum during test run.)	initial (R)	N.O.	N.O.		
	intermediate (R)				
	intermediate (R)				
	intermediate (R)				
	final (M)	✓	✓		
3. Pitot lines leak check: (hold 3 in. H_2O on manometer for 15 sec.)	initial positive line (R)	N.O.	N.O.		
	negative line (R)	N.O.	N.O.		
	final positive line (M)	✓	✓		
	negative line (M)	✓	✓		
	pitot tube undamaged	✓	✓		
4. Orsat sampling train leak check: (should hold 10 in. vacuum for 1/2 min.)	initial (M)				
	final (M)				
Orsat: Initial leak check (M) * Tedlar bag: Should hold 2 to 4 in. H_2O pressure for 10 minutes. Alternate: Completely fill bag and let stand overnight - no deflation.		✓	✓		
5. Time test started		840	830		
Time test ended		1640	1730		

* performed by EPA observer

Paul [illegible]
Signature of Observer

GCA
Affiliation of Observer

1/24/83
Date

Signature of Test Team Representative

Date

		Test Run 1	Test Run 2	Test Run 3	Sootblow
	Date				
6. Dry gas meter volumes:	port initial				
	final				
	port initial				
	final				
	port initial				
	final				
	port initial				
	final				
7. Train operation during run	pitch and yaw of probe OK	✓	✓		
	nozzle not scrapped on nipple	✓	✓		
	effective seal around probe	✓	✓		
	probe moved at proper time	✓	✓		
	probe heated	✓	✓		
	nomograph changed when TS and/or TM changes significantly	✓	✓		
	average time to set isokinetics after probe moved to next point	✓	✓		
Average values:	impinger temperature should be <70°F	✓	✓		
	filter box temperature (250°F ±25, ≤320°F) circle one	✓	✓		
	stack temperature	74.5/79.4	71.2/77.9		

Paul S. Wolf
Signature of Observer

GEA
Affiliation of Observer

1/26/80
Date

Signature of Test Team Representative

Date

		Test Run 1	Test Run 2	Test Run 3	Sootblow
	Date				
	barometric P taken	✓	✓		
	was probe ever disconnected from filter holder while in stack?	NO	NO		
	was filter changed during run?	NO	NO		
Check on filter holder -	loosening of clamping device	✓	✓		
	was silica gel changed during run?	NO	NO		
	was any particulate lost?	NO	NO		
Accurate readings of:	ΔP	✓	✓		
	ΔH	✓	✓		
	meter temperature	✓	✓		
	stack temperature	✓	✓		
	meter vacuum	✓	✓		
	time per point	✓	✓		
	impinger temperature	✓	✓		
	filter box temperature	✓	✓		
8. Post test:	- All openings sealed	✓	✓		
	- recovery area clean sheltered	✓	✓		
	- filter handled with gloves, forceps	✓	✓		
	- petri dish sealed, labeled	✓	✓		
	- any particulate lost	✓	✓		

Paul [illegible] — Signature of Observer

GCA — Affiliation of Observer

1/24/83 — Date

_____ Signature of Test Team Representative

_____ Date

	Test Run 1	Test Run 2	Test Run 3	Sootblow
Date				
- water measured: grad cylinder (d.v. ≤2 mℓ) mℓ				
- silica gel weighed, balance net gms				
condition	good	good		
- probe cooled sufficiently	✓	✓		
- nozzle removed and brushed	✓	✓		
- probe brushed - 6 times	✓	✓		
- nozzle brushes clean	✓	✓		
- glass wash bottles clean	✓	✓		
- acetone clean	✓	✓		
- water clean	✓	✓		
- blanks taken: acetone, water/other*	N.O.	N.O.		
Probe brush and extension clean, type	gun rod	gun rod		
Sample jars: Clean	✓	✓		
Capped	✓	✓		
Sealed**				
Labeled**				
Liquid level marked.**				
9. Post test Orsat Analysis of Integrated Bag Sample				
Orsat analyzer - initial (M) (levels should not fall below cap. tubing and not more than 0.2 mℓ in burrette for 4 min.) Initial	✓	✓		
Orsat analyzer - final (M) Final	✓	✓		

* not observed although I requested that they take one
** bag was performed immediately after run.

Signature of Observer: Paul [illegible]

Affiliation of Observer: GCA

Date: 1/24/87

Signature of Test Team Representative

Date

	Test Run 1	Test Run 2	Test Run 3	Sootblow
Date				
Orsat samples: see notes Type: Pretest agreement				
Observed				
Reported				
Number: Pretest agreement				
Observed				
Reported				
Sample time/point: Pretest agreement				
Observed				
Reported				
Analysis at end of test Orsat analyzer checked against air	—	—		
Orsat Analysis CO_2, %	3.0	—		
O_2, %	8.0	—		
CO, %	0.0	—		
10. All samples locked up	✓	✓		
All sampling components clean and sealed	✓	✓		
All data sheets submitted to observer				
- Orsat	NO	NO		
- Run - isokinetic	✓	✓		
- Particulate cleanup	NO	NO		
- Process data	mailed to observer			
- Charts	"	"		

Signature of Observer

GCA
Affiliation of Observer

1/24/87
Date

Signature of Test Team Representative

Date

NOTES: The pretest agreement regarding orsats was that, as during the southside tests, if orsat analysis proved to be air (e.g. 20.9% O_2), then further orsat analysis would not be required for subsequent tests. The circumstance was that the gaseous emissions were air.

Signature of Observer

Affiliation of Observer

1/24/83
Date

Signature of Test Team Representative

Date