Note: This is a reference cited in *AP 42, Compilation of Air Pollutant Emission Factors, Volume I Stationary Point and Area Sources.* AP42 is located on the EPA web site at www.epa.gov/ttn/chief/ap42/

The file name refers to the reference number, the AP42 chapter and section. The file name "ref02_c01s02.pdf" would mean the reference is from AP42 chapter 1 section 2. The reference may be from a previous version of the section and no longer cited. The primary source should always be checked.

Rouge Steel Company
No.1 Push Control System
"A" and "Ax" Coke Oven Batteries
Particulate Emission Survey

August 20-22, 1985

Conducted by

Stationary Source Environmental Control Office
Survey and Compliance Assurance

Survey Conducted By:

T. A. DeWulf

D. K. Russell

D. S. Wood

Report Prepared By:

D. K. Russell

Concur:

J. M. Reinke, Manager

Rouge Steel Company
No.1 Push Control System
"A" and "Ax" Coke Oven Batteries
Particulate Emission Survey
August 20-22, 1985

Table of Contents

	Subject	Page
I.	Introduction	1
II.	Process Description	2
III.	Summary	3
IV.	Results	4
V.	Discussion	7

List of Appendices

A.	Location of Sampling Ports and Points	8
B.	Sampling Procedures	12
C.	Analytical Procedures	15
D.	Opacity Data Sheets	18
E.	Field Data Sheets	22
F.	Production Data	35
G.	Laboratory Data Sheets	39
H.	Sample Calculations	41
I.	Calibration Data	50

List of Tables

I.	Summary of Results	3
II.	Stack Gas Velocity and Flow Results	5
III.	Particulate Sampling Results	6

List of Figures

1.	Location of Sample Ports	10
2.	Location of Sample Points	11
3.	Particulate Sampling Train	14

I. INTRODUCTION

Three tests for filterable particulate and condensable emissions were performed on the No.1 Push Control Scrubber stack during the week of August 19, 1985. The survey was conducted as part of the biennial test requirements of the Ford-Wayne County Consent Judgment.

The survey took place over a three-day period. Emission sampling was limited to the short periods of time when oven pushes occurred on "A" and "Ax" batteries. Stack opacity readings were taken in conjunction with each push of the three tests.

The survey was witnessed by Messrs. S. Drielick and V. Vescernyes of the Wayne Country Air Pollution Control Division and Messrs. R. Dawson, D. O'Connor and J. Scott from Rouge Steel Company. Emission sampling was performed by the Ford Stationary Source Environmental Control Office.

II. PROCESS DESCRIPTION

The No.1 Push Control Scrubber System captures and cleans push emissions from the "A" and "Ax" Coke Oven Batteries at Rouge Steel Company.

Ovens in the batteries are charged with approximately 17 tons of pulverized coal every 17 hours. After the destructive distillation of coal to coke is completed, the oven doors are opened and coke is removed by pushing a mechanical ram arm through the oven. Coke is forced into a one-spot quench car which is covered by an exhaust hood to capture emissions from the push. After the push operation is completed, the one-spot car pivots to cover its load. The car is transported by rail to a quench tower where a water spray is applied to cool the coke and keep it from burning further. The car serves "A", "Ax" and "B" batteries.

Prior to each push, a door machine on the coke side of the oven removes the oven door and aligns itself with a second door on the fume main. When this entryway is opened, the door machine--with exhaust hood--is connected to the emission control system. The machine operator engages the system fan when the one-spot car is in place and the exhaust system is ready for the push. Push emissions are carried up the hood, to the main, and over to a high-energy Kinpactor Wet scrubber. The cleaned exhaust gas is then vented to atmosphere through a 90-inch diameter stack.

During this survey the pressure drop across the venturi scrubber throat was approximately 50 inches water and the fan amperage was 235 amps.

III. SUMMARY

The results from this survey are summarized below in Table I.

Table I
Summary of Results
No.1 Push Control Scrubber Stack
Rouge Steel Company
August 20-22, 1985

	Units	Test 1	Test 2	Test 3	Avg.
Particulate Emissions					
Rel. to Coke Pushed	lb/ton	0.029	0.034	0.021	0.028
Concentration	$lb/1000lb_w$	0.037	0.045	0.028	0.037
Flowrate	lb/hr	15.0	17.7	10.8	14.5
Condensable Emissions					
Concentration	$lb/1000lb_w$	0.023	0.033	0.025	0.027
Flowrate	lb/hr	9.11	13.1	9.54	10.6
Stack Gas Flowrate					
Actual Conditions	ACFM	108,000	105,000	103,000	105,000
Standard Conditions	$SCFM_w$	92,800	90,600	88,600	90,700
Stack Temperature	°F	144	146	146	145

Particulate concentrations and flowrates represent conditions which exist during the brief periods when ovens are pushed. They should not be interpreted as continuous emission rates from the stack.

IV. RESULTS

Individual test results from this survey are presented in Tables II and III which follow. These tables include measured and calculated results from the stack survey. Field opacity data sheets are included in Appendix D, and oven charge weights and coking times are included in Appendix F.

Table II

ROUGE STEEL CO. NO.1 PUSH CONTROL SCRUBBER

STACK GAS VELOCITY AND FLOW RESULTS

	UNITS	TEST NUMBER 1	2	3	AVERAGE
PHYSICAL DATA					
DATE OF TEST		8/20/85	8/21/85	8/22/85	
TIME OF TEST	START	0920	0848	0848	
	FINISH	1345	1352	1315	
NUMBER OF TRAVERSE POINTS		16	16	16	
PITOT TUBE COEFFICIENT		0.78	0.78	0.78	
MEASURED DATA					
BAROMETRIC PRESSURE	INCHES HG	29.55	29.59	29.60	
STACK DIAMETER	INCHES	90.0	90.0	90.0	
STACK STATIC PRESSURE	INCHES H20	-0.30	-0.30	-0.30	
STACK GAS TEMPERATURE	DEG F	144.	146.	146.	145.
CALCULATED DATA					
STACK GAS PRESSURE	INCHES HG	29.53	29.57	29.58	
MOISTURE	VOLUME %	8.2	9.4	8.7	8.8
DRY MOLECULAR WEIGHT	LB/LB-MOLE	29.00	29.00	29.00	29.00
WET MOLECULAR WEIGHT	LB/LB-MOLE	28.10	27.97	28.05	28.04
AVERAGE SQ. ROOT OF VELOCITY PRESSURE	IN.H2O**.5	0.714	0.695	0.681	0.697
STACK CROSS SECTIONAL AREA	SQ. FT.	44.18	44.18	44.18	
STACK GAS VELOCITY - STACK COND.	FT/MIN	2440.	2380.	2330.	2380.
STACK GAS VELOCITY - STD. COND.	FT/MIN	2100.	2050.	2010.	2050.
STACK GAS FLOW - STACK COND.	ACFM	108000.	105000.	103000.	105000.
STACK GAS FLOW - DRY STD. COND.	DSCFM	85200.	82100.	80900.	82700.
STACK GAS FLOW - WET STD. COND.	WSCFM	92800.	90600.	88600.	90700.

++
STANDARD CONDITIONS: 68 DEG F AND 29.92 IN. HG
++

Table III

ROUGE STEEL CO. NO.1 PUSH CONTROL SCRUBBER

FILTERABLE PARTICULATE AND CONDENSABLE SAMPLING RESULTS

	UNITS	TEST NUMBER 1	2	3	AVERAGE
PHYSICAL DATA					
DATE OF TEST		8/20/85	8/21/85	8/22/85	
TIME OF TEST	START	0920	0848	0848	
	FINISH	1345	1357	1315	
NOZZLE DIAMETER	INCHES	0.2490	0.2490	0.2490	
MEASURED DATA					
METERED SAMPLE VOLUME	CU. FT.	14.687	14.574	14.423	
AVERAGE METER TEMPERATURE	DEG F	66.4	63.8	66.7	
METER CORRECTION FACTOR		1.0135	1.0135	1.0135	
AVERAGE ORIFICE PRESSURE DROP	INCHES H2O	1.62	1.53	1.47	
VOLUME OF H2O CONDENSATE	ML	25.0	29.0	26.0	
WEIGHT OF H2O ADSORBED	GRAMS	3.1	3.4	3.3	
TOTAL SAMPLE TIME	MINUTES	20.0	20.0	20.0	
PROBE WASH WEIGHT	GRAMS	0.0129	0.0165	0.0081	
WEIGHT, FILTER CATCH	GRAMS	0.0069	0.0076	0.0066	
WEIGHT, CONDENSABLES	GRAMS	0.0120	0.0170	0.0130	
CALCULATED DATA					
METERED SAMPLE VOLUME - STD. COND.	CU. FT.	14.806	14.780	14.551	
TOTAL SAMPLE CORR. VOL. - STD. COND.	CU. FT.	16.132	16.309	15.934	
TOTAL PARTICULATE WEIGHT	GRAMS	0.0198	0.0241	0.0147	
PARTICULATE CONC. - STACK COND.	GR/ACF	0.0163	0.0196	0.0123	0.0161
PARTICULATE WEIGHT CONC. - DRY STD. COND.	#/10000DRY	0.0392	0.0477	0.0296	0.0388
PARTICULATE WEIGHT CONC. - WET STD. COND.	#/10000WET	0.0371	0.0449	0.0279	0.0366
PARTICULATE FLOW RATE	LB/HR	15.0	17.7	10.8	14.5
CONDENSABLE WEIGHT	GRAMS	0.0120	0.0170	0.0130	
CONDENSABLE CONC. - STACK COND.	GR/ACF	0.00990	0.0145	0.0100	0.0117
CONDENSABLE WEIGHT CONC. - DRY STD. COND.	#/10000DRY	0.0237	0.0353	0.0262	0.0284
CONDENSABLE WEIGHT CONC. - WET STD. CONC.	#/10000WET	0.0225	0.0331	0.0247	0.0268
CONDENSABLE FLOW RATE	LB/HR	9.11	13.1	9.54	10.6
NOZZLE AREA	SQ. FT.	0.000338	0.000338	0.000338	
ISOKINETIC RATIO	%	109.	113.	113.	112.
EMISSION RATE	LB/TON	0.0290	0.0341	0.0205	0.0279

++
STANDARD CONDITIONS: 68 DEG F AND 29.92 IN. HG
++

V. DISCUSSION

Because testing is possible only during periods when ovens on "A" and "Ax" batteries are pushed, it is necessary to shorten test times from recommended EPA-5 procedures. Although the overall time required to complete a test is approximately five hours, the net sampling time is limited to 21 minutes. As a result, total sample volumes are about half of the recommended 30 ft^3 EPA guideline. This does not adversely affect test results, however, since a measureable quantity of particulate is captured during each test.

The survey was performed without interruption. The one-spot quench car was in-service throughout the test periods. The emission control system also functioned without incident, as did the sampling equipment at the stack.

All sampling train leak-checks were within the allowable 0.02 cfm limit. **Isokinetic sampling ratios varied from 109-113 percent, slightly exceeding the 110 percent limit.**

APPENDIX A

LOCATION OF SAMPLING PORTS AND POINTS

APPENDIX C (Cont'd)

The impinger liquor and associated rinses are evaporated to dryness in tared porcelain crucibles. The dishes are placed under a laboratory hood on a "steam" bath maintained at 90°F. Several days later, after the contents have completely evaporated, the dishes are placed in the desiccator for 24 hours and weighed on an analytical balance.

Gas Composition

Oxygen readings are taken at each sample point using a Sybron-Taylor Model OA 570 instantaneous reading analyzer. Measurements are recorded on the data sheets used at the stack.

Moisture

Moisture percentage in exhaust gas is determined for each test by measuring the volume of condensate in the first three impingers of the Method 5 train and the weight gain of the silica gel in the fourth impinger.

Rouge Steel Company
No.1 Push Control System
"A" and "Ax" Coke Oven Batteries
Particulate Emission Survey

August 20-22, 1985

Conducted by

Stationary Source Environmental Control Office
Survey and Compliance Assurance

Survey Conducted By:

T. A. DeWulf

D. K. Russell

D. S. Wood

Report Prepared By:

D. K. Russell

Concur:

J. M. Reinke, Manager

Rouge Steel Company
No.1 Push Control System
"A" and "Ax" Coke Oven Batteries
Particulate Emission Survey
August 20-22, 1985

Table of Contents

	Subject	Page
I.	Introduction	1
II.	Process Description	2
III.	Summary	3
IV.	Results	4
V.	Discussion	7

List of Appendices

A.	Location of Sampling Ports and Points	8
B.	Sampling Procedures	12
C.	Analytical Procedures	15
D.	Opacity Data Sheets	18
E.	Field Data Sheets	22
F.	Production Data	35
G.	Laboratory Data Sheets	39
H.	Sample Calculations	41
I.	Calibration Data	50

List of Tables

I.	Summary of Results	3
II.	Stack Gas Velocity and Flow Results	5
III.	Particulate Sampling Results	6

List of Figures

1.	Location of Sample Ports	10
2.	Location of Sample Points	11
3.	Particulate Sampling Train	14

I. INTRODUCTION

Three tests for filterable particulate and condensable emissions were performed on the No.1 Push Control Scrubber stack during the week of August 19, 1985. The survey was conducted as part of the biennial test requirements of the Ford-Wayne County Consent Judgment.

The survey took place over a three-day period. Emission sampling was limited to the short periods of time when oven pushes occurred on "A" and "Ax" batteries. Stack opacity readings were taken in conjunction with each push of the three tests.

The survey was witnessed by Messrs. S. Drielick and V. Vescernyes of the Wayne Country Air Pollution Control Division and Messrs. R. Dawson, D. O'Connor and J. Scott from Rouge Steel Company. Emission sampling was performed by the Ford Stationary Source Environmental Control Office.

II. PROCESS DESCRIPTION

The No.1 Push Control Scrubber System captures and cleans push emissions from the "A" and "Ax" Coke Oven Batteries at Rouge Steel Company.

Ovens in the batteries are charged with approximately 17 tons of pulverized coal every 17 hours. After the destructive distillation of coal to coke is completed, the oven doors are opened and coke is removed by pushing a mechanical ram arm through the oven. Coke is forced into a one-spot quench car which is covered by an exhaust hood to capture emissions from the push. After the push operation is completed, the one-spot car pivots to cover its load. The car is transported by rail to a quench tower where a water spray is applied to cool the coke and keep it from burning further. The car serves "A", "Ax" and "B" batteries.

Prior to each push, a door machine on the coke side of the oven removes the oven door and aligns itself with a second door on the fume main. When this entryway is opened, the door machine--with exhaust hood--is connected to the emission control system. The machine operator engages the system fan when the one-spot car is in place and the exhaust system is ready for the push. Push emissions are carried up the hood, to the main, and over to a high-energy Kinpactor Wet scrubber. The cleaned exhaust gas is then vented to atmosphere through a 90-inch diameter stack.

During this survey the pressure drop across the venturi scrubber throat was approximately 50 inches water and the fan amperage was 235 amps.

III. SUMMARY

The results from this survey are summarized below in Table I.

Table I
Summary of Results
No.1 Push Control Scrubber Stack
Rouge Steel Company
August 20-22, 1985

	Units	Test 1	Test 2	Test 3	Avg.
Particulate Emissions					
Rel. to Coke Pushed	lb/ton	0.029	0.034	0.021	0.028
Concentration	$lb/1000lb_w$	0.037	0.045	0.028	0.037
Flowrate	lb/hr	15.0	17.7	10.8	14.5
Condensable Emissions					
Concentration	$lb/1000lb_w$	0.023	0.033	0.025	0.027
Flowrate	lb/hr	9.11	13.1	9.54	10.6
Stack Gas Flowrate					
Actual Conditions	ACFM	108,000	105,000	103,000	105,000
Standard Conditions	SCFMw	92,800	90,600	88,600	90,700
Stack Temperature	°F	144	146	146	145

Particulate concentrations and flowrates represent conditions which exist during the brief periods when ovens are pushed. They should not be interpreted as continuous emission rates from the stack.

IV. RESULTS

Individual test results from this survey are presented in Tables II and III which follow. These tables include measured and calculated results from the stack survey. Field opacity data sheets are included in Appendix D, and oven charge weights and coking times are included in Appendix F.

Table II

ROUGE STEEL CO. NO.1 PUSH CONTROL SCRUBBER

STACK GAS VELOCITY AND FLOW RESULTS

	UNITS	TEST NUMBER 1	2	3	AVERAGE
PHYSICAL DATA					
DATE OF TEST		8/20/85	8/21/85	8/22/85	
TIME OF TEST	START	0920	0848	0848	
	FINISH	1345	1352	1315	
NUMBER OF TRAVERSE POINTS		16	16	16	
PITOT TUBE COEFFICIENT		0.78	0.78	0.78	
MEASURED DATA					
BAROMETRIC PRESSURE	INCHES HG	29.55	29.59	29.60	
STACK DIAMETER	INCHES	90.0	90.0	90.0	
STACK STATIC PRESSURE	INCHES H20	-0.30	-0.30	-0.30	
STACK GAS TEMPERATURE	DEG F	144.	146.	146.	145.
CALCULATED DATA					
STACK GAS PRESSURE	INCHES HG	29.53	29.57	29.58	
MOISTURE	VOLUME %	8.2	9.4	8.7	8.8
DRY MOLECULAR WEIGHT	LB/LB-MOLE	29.00	29.00	29.00	29.00
WET MOLECULAR WEIGHT	LB/LB-MOLE	28.10	27.97	28.05	28.04
AVERAGE SQ. ROOT OF VELOCITY PRESSURE	IN.H20**.5	0.714	0.695	0.681	0.697
STACK CROSS SECTIONAL AREA	SQ. FT.	44.18	44.18	44.18	
STACK GAS VELOCITY - STACK COND.	FT/MIN	2440.	2380.	2330.	2380.
STACK GAS VELOCITY - STD. COND.	FT/MIN	2100.	2050.	2010.	2050.
STACK GAS FLOW - STACK COND.	ACFM	108000.	105000.	103000.	105000.
STACK GAS FLOW - DRY STD. COND.	DSCFM	85200.	82100.	80900.	82700.
STACK GAS FLOW - WET STD. COND.	WSCFM	92800.	90600.	88600.	90700.

++
STANDARD CONDITIONS: 68 DEG F AND 29.92 IN. HG
++

Table III

ROUGE STEEL CO. NO.1 PUSH CONTROL SCRUBBER

FILTERABLE PARTICULATE AND CONDENSABLE SAMPLING RESULTS

	UNITS	TEST NUMBER 1	2	3	AVERAGE
PHYSICAL DATA					
DATE OF TEST		8/20/85	8/21/85	8/22/85	
TIME OF TEST	START	0920	0848	0848	
	FINISH	1345	1357	1315	
NOZZLE DIAMETER	INCHES	0.2490	0.2490	0.2490	
MEASURED DATA					
METERED SAMPLE VOLUME	CU. FT.	14.687	14.574	14.423	
AVERAGE METER TEMPERATURE	DEG F	66.4	63.8	66.7	
METER CORRECTION FACTOR		1.0135	1.0135	1.0135	
AVERAGE ORIFICE PRESSURE DROP	INCHES H20	1.62	1.53	1.47	
VOLUME OF H20 CONDENSATE	ML	25.0	29.0	26.0	
WEIGHT OF H20 ABSORBED	GRAMS	3.1	3.4	3.3	
TOTAL SAMPLE TIME	MINUTES	20.0	20.0	20.0	
PROBE WASH WEIGHT	GRAMS	0.0129	0.0165	0.0081	
WEIGHT, FILTER CATCH	GRAMS	0.0069	0.0076	0.0066	
WEIGHT, CONDENSABLES	GRAMS	0.0120	0.0178	0.0130	
CALCULATED DATA					
METERED SAMPLE VOLUME - STD. COND.	CU. FT.	14.006	14.700	14.551	
TOTAL SAMPLE CORR. VOL. - STD. COND.	CU. FT.	16.132	16.309	15.934	
TOTAL PARTICULATE WEIGHT	GRAMS	0.0198	0.0241	0.0147	
PARTICULATE CONC. - STACK COND.	GR/ACF	0.0163	0.0196	0.0123	0.0161
PARTICULATE WEIGHT CONC. - DRY STD. COND.	#/1000#DRY	0.0392	0.0477	0.0296	0.0388
PARTICULATE WEIGHT CONC. - WET STD. COND.	#/1000#WET	0.0371	0.0449	0.0279	0.0366
PARTICULATE FLOW RATE	LB/HR	15.0	17.7	10.0	14.5
CONDENSABLE WEIGHT	GRAMS	0.0120	0.0178	0.0130	
CONDENSABLE CONC. - STACK COND.	GR/ACF	0.00990	0.0145	0.0108	0.0117
CONDENSABLE WEIGHT CONC. - DRY STD. COND.	#/1000#DRY	0.0237	0.0353	0.0262	0.0284
CONDENSABLE WEIGHT CONC. - WET STD. CONC.	#/1000#WET	0.0225	0.0331	0.0247	0.0268
CONDENSABLE FLOW RATE	LB/HR	9.11	13.1	9.54	10.6
NOZZLE AREA	SQ. FT.	0.000338	0.000338	0.000338	
ISOKINETIC RATIO	%	109.	113.	113.	112.
EMISSION RATE	LB/TON	0.0290	0.0341	0.0205	0.0279

++
STANDARD CONDITIONS: 68 DEG F AND 29.92 IN. HG
++

V. DISCUSSION

Because testing is possible only during periods when ovens on "A" and "Ax" batteries are pushed, it is necessary to shorten test times from recommended EPA-5 procedures. Although the overall time required to complete a test is approximately five hours, the net sampling time is limited to 21 minutes. As a result, total sample volumes are about half of the recommended 30 ft^3 EPA guideline. This does not adversely affect test results, however, since a measureable quantity of particulate is captured during each test.

The survey was performed without interruption. The one-spot quench car was in-service throughout the test periods. The emission control system also functioned without incident, as did the sampling equipment at the stack.

All sampling train leak-checks were within the allowable 0.02 cfm limit. **Isokinetic sampling ratios varied from 109-113 percent, slightly exceeding the 110 percent limit.**

APPENDIX A

LOCATION OF SAMPLING PORTS AND POINTS

APPENDIX A

LOCATION OF SAMPLING PORTS AND POINTS

Figures 1 and 2 which follow show the locations of the sampling ports and points used for testing this source. The sampling location is approximately 8.0 duct diameters downstream from the nearest stack constriction, or 3.1 diameters from the silencer baffle. The top of the stack is approximately one duct diameter from the ports.

The revised EPA method 1* chart requires 24 sampling points for this source. However, due to the intermittent operation of this system and because the flow profile is fairly uniform, a compromise was reached with Wayne County APCD to allow for 16 sample points per test.

*Federal Register, Vol 48, No. 191, September 30, 1983.

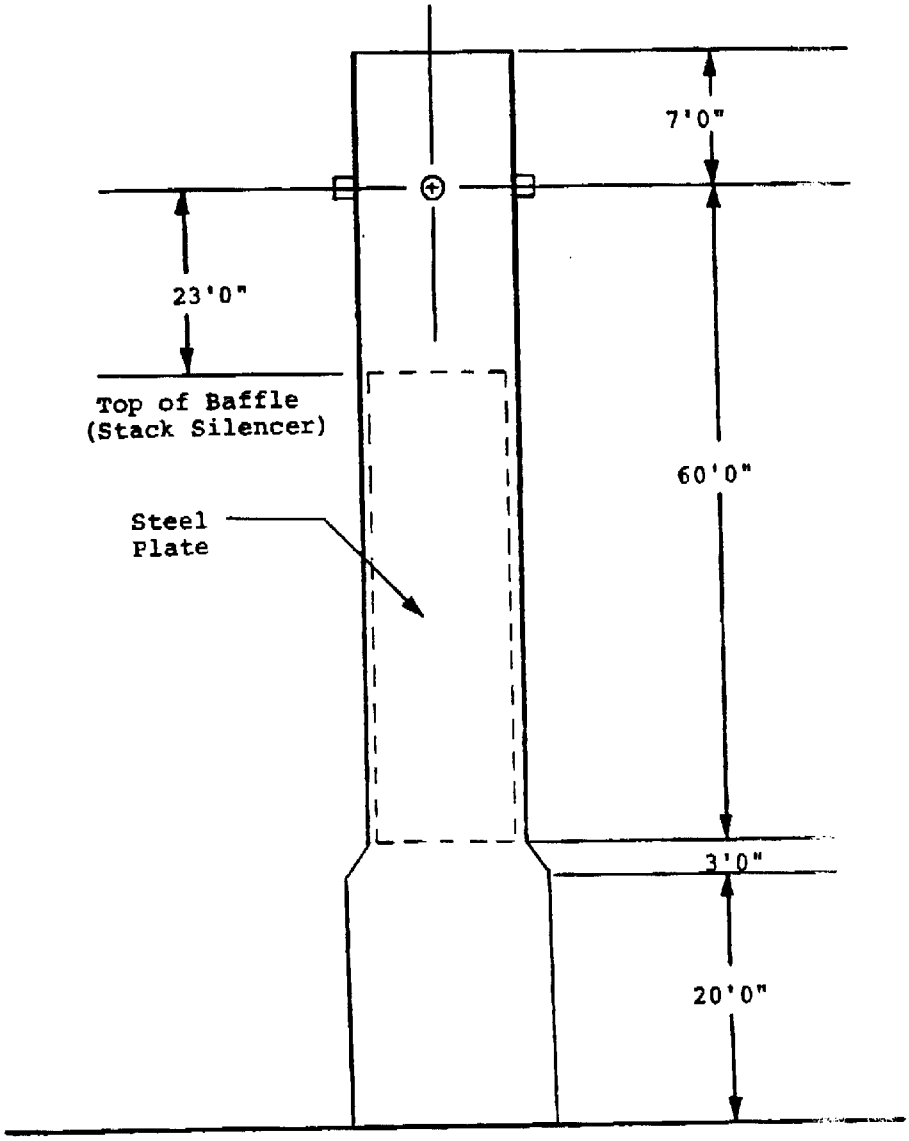

FIGURE 1
LOCATION OF SAMPLING PORTS
NO.1 SYSTEM COKE OVEN PUSH CONTROL SCRUBBER STACK
ROUGE STEEL COMPANY

FIGURE 2
LOCATION OF SAMPLING POINTS
COKE OVEN PUSH CONTROL NO.1 STACK
ROUGE STEEL COMPANY

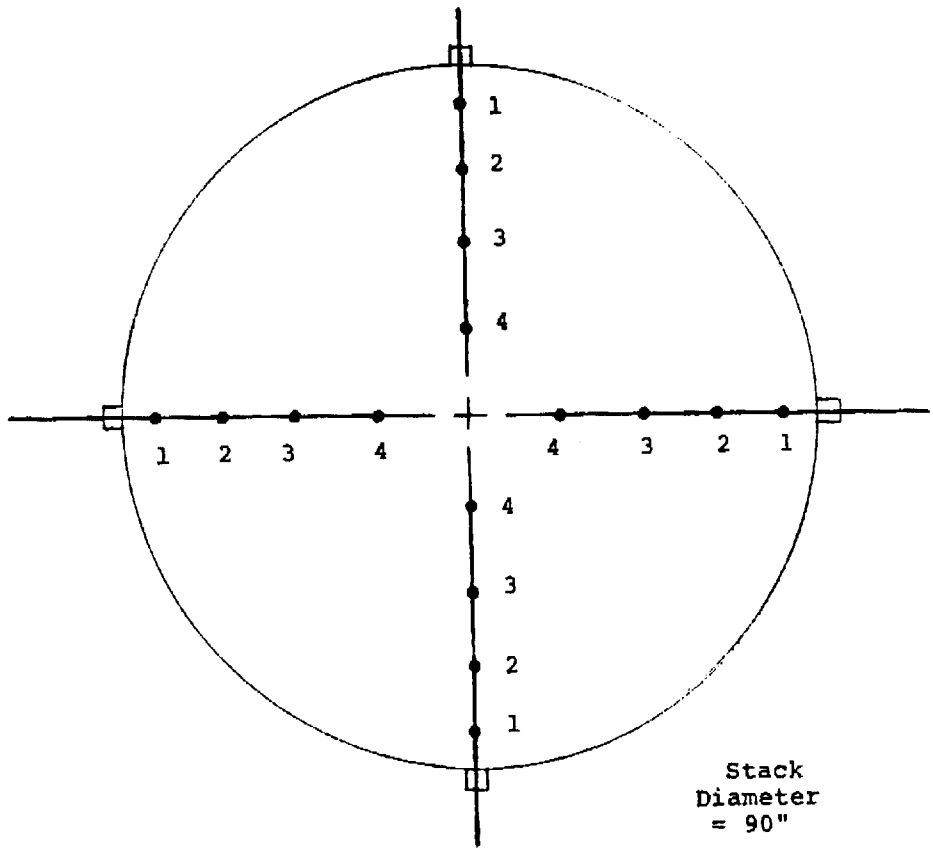

Point No.	Distance From Wall (In.)
1	2-7/8
2	9-7/16
3	17-7/16
4	29-1/16

APPENDIX B

SAMPLING PROCEDURES

APPENDIX B

SAMPLING PROCEDURES

Each particulate test consisted of 16 pushes. Sampling was initiated at the stack when the pusher ram was inserted in the oven and stack emissions became visible. Sampling was discontinued at each point approximately 78 seconds later when the one-spot quench car left the oven. The length of sample was dependent upon the movement of the quench car.

The stack testing procedures followed are consistent with EPA Test Methods 1, 2 and 5. Stack gas velocity is determined using an S-type pitot tube and probe assembly whose coefficient is previously determined by calibration against a standard pitot tube at the SSECO Wind Tunnel.

Particulate samples are collected in the EPA sampling train depicted in Figure 3. This train consists of a stainless steel nozzle and glass probe connected to a Type AE fiberglass filter assembly. The probe temperature is maintained at approximately 250°F and the filter box temperature is kept near 250°F.

After the filter, the sample gases pass through four impingers, in series, placed in an ice bath. All impingers are of the Greenburg-Smith design, but only the second impinger has the tapered tip and impingement plate. The others have the tip replaced by an extended 1/2 inch ID glass tube. The first two impingers contain 150 ml of distilled water, the third is empty, and the fourth contains approximately 200 grams of preweighed silica gel.

The final portion of the train includes a control valve, leakless vacuum pump, surge tank, dry gas test meter and calibrated orifice.

Thermocouples located at six positions in the sampling train are connected to a Doric Trendicator digital-readout pyrometer. Temperatures are monitored at each sampling point throughout the test.

FIGURE 3
PARTICULATE SAMPLING TRAIN

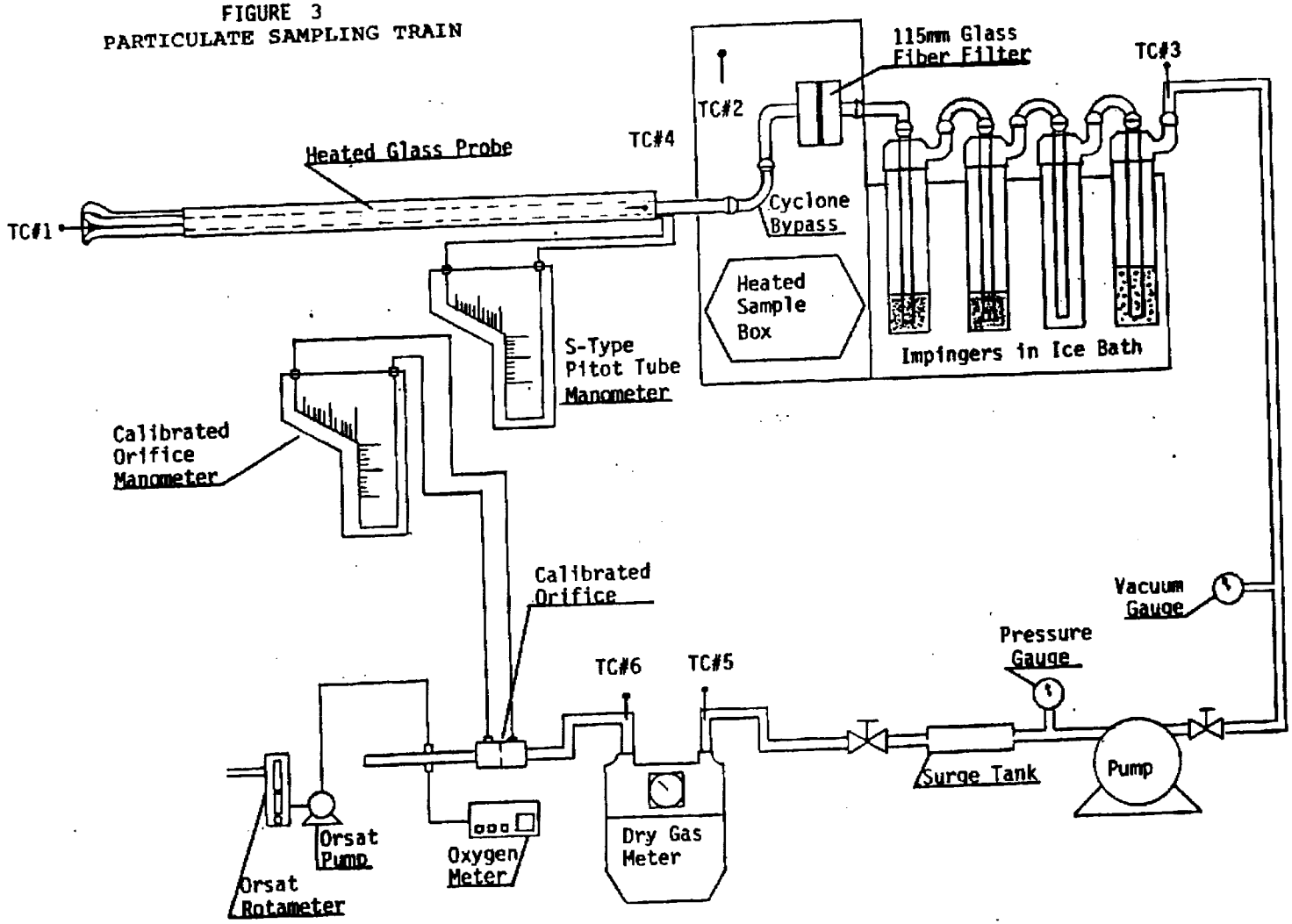

APPENDIX C

ANALYTICAL PROCEDURES

APPENDIX C

ANALYTICAL PROCEDURES

Particulate

At the conclusion of each test the sampling probe is removed from the stack and allowed to cool. A final leak check is performed by sealing off the nozzle tip, starting the pump and monitoring the flowrate on the dry gas meter. After this is completed the nozzle is removed from the probe, the probe is removed for the sample box, and both are washed and brushed clean using acetone and a bristle brush. The premeasured acetone rinse is stored in a narrow-mouth glass bottle which is capped and labeled appropriately.

The cyclone bypass is removed from the filter and rinsed and brushed with acetone into the nozzle and probe rinse. The front half of the glass filter holder is washed in a similar fashion and added to the cyclone rinse. The probe wash and cyclone bypass rinses are evaporated to dryness at 130°F in tared porcelain crucibles and the weight gain is recorded as probe catch.

After each test the glass fiber filters are sealed in their filter holders which, upon returning to the laboratory, are disassembled and rinsed with acetone. The rinse from the back portion of the holder is added to the impinger catch while the front-half rinse is added to the probe wash. The 115 mm glass fiber filters are placed in the aluminum foil wrappers that they were originally weighed in. They are dried for two hours in an oven maintained at 220°F and transferred to a desiccator overnight. The filters are weighed the following day on an analytical balance having a sensitivity of ± 0.1 mg.

The laboratory data are shown in Appendix G. A blank correction has been made for the acetone and distilled water used for rinses and initial impinger contents.

APPENDIX C (Cont'd)

The impinger liquor and associated rinses are evaporated to dryness in tared porcelain crucibles. The dishes are placed under a laboratory hood on a "steam" bath maintained at 90°F. Several days later, after the contents have completely evaporated, the dishes are placed in the desiccator for 24 hours and weighed on an analytical balance.

Gas Composition

Oxygen readings are taken at each sample point using a Sybron-Taylor Model OA 570 instantaneous reading analyzer. Measurements are recorded on the data sheets used at the stack.

Moisture

Moisture percentage in exhaust gas is determined for each test by measuring the volume of condensate in the first three impingers of the Method 5 train and the weight gain of the silica gel in the fourth impinger.

APPENDIX D

OPACITY DATA SHEETS

NO. 1 PUSHER STACK TEST NO. 1 8-20-85

TIME	[illegible] NO.	0	15	30	45	60	15		TOTAL	AVE	
9:20	3	0	25	20	20	20	5		90	15	1
9:28	13	0	0	10	10	10	10		40/6	6.7	2
9:48	23	0	20	30	40	20	5		115/6	18.9	3 + 4
10:17	43	0	0	5	5	0	0		10	1.7	5
10:27	57	0	0	15	10	10	5		40	6.7	6
10:47	5	0	0	5	5	10	5		25		7
10:57	15	0	0	0	0	0	5		5		8
11:14	25	0	10	20	45	25	25	20	145/7	20.7	9
1:30	35	0	0	20	10	0	0		30		10
11:47	45	0	10	15	20	25	10		80		11
12:03	59	0	20	15	20	10	5		75		12
12:57	7	0	15	15	45	30	20	25	150/7	21.4	13
1:09	17	did not take any samples									14
1:24	27	0	15	5	5	25	30	15	95/7	15.9	15
1:42	37	0	0	0	0	0	0		0		16

Temp 62 partly Cloudy

N. West

T. Scott — Reader

NO. 1 PUSHER STACK TEST NO. 2 8/21/85

* NO. 1 SCRUBBER STACK SS-2 TEST * D.A. O'Connor

Environmental Control Dept. Observer: D.A. O'Connor Batt. ------

COKE OVENS

EPA CJ METHOD

ROUGE STEEL Pushing Opacity Observations

DATE	OVEN NO.	TIME	0 sec.	15 sec.	30 sec.	45 sec.	60 sec.	75 sec.	AVG.	NO. 1 SCRUBBER	
21-AUG 85	A - 39	8:47	5	5	15	5	0	5	5.8%	"	"
	A - 49	9:31	0	45	20	10	40	25	23.3	"	"
	A - 2	9:49	0	10	20	40	20	25	19.1	"	"
	A - 12	10:11	5	35	5	5	45	25	20.0	"	"
	A - 22	10:23	5	50	40	45	35	15	31.7	"	"
	Ax - 57	10:32	0	0	10	5	20	20	9.2	"	"
	A - 32	10:50	0	0	5	0	5	5	2.5	"	"
	A - 42	10:56	5	45	40	15	5	10	20.0	"	"
	A - 4	11:06	0	10	5	25	0	0	6.7	"	"
	A - 14	11:24	0	0	0	0	5	5	1.7	"	"
	A - 24	11:33	0	35	35	55	40	35	33.3	"	"
	Ax - 64	11:50	0	5	10	5	0	15	5.8	"	"
	A - 34	1:02	5	5	35	20	10	10	14.1	"	"
	A - 44	1:13	5	15	20	10	10	5	10.8	"	"
	A - 6	1:24	0	10	10	20	50	40	21.7	"	"
	A - 16	1:57	0	10	10	5	0	5	5.0		

* NO. 1 SCRUBBER SBECO TEST *

Environmental Control Dept.

Observer: D.A. O'Connor, Batt A/Ax

COKE OVENS
EPA CJ METHOD

ROUGE STEEL Pushing Opacity Observations

DATE	OVEN NO.	TIME	0 sec.	15 sec.	30 sec.	45 sec.	60 sec.	75 sec.	AVG.	NO. 1 SCRUBBER
22-AUG 85	A · 36	8:47	0	0	0	5	10	5	3.3%	" "
	A · 46	8:59	0	15	10	5	0	0	5.0	" "
	A · 8	9:28	0	20	30	20	15	5	15.0	" "
	A · 18	9:39	0	0	5	5	0	0	1.7	" "
	A · 28	9:52	5	30	15	35	20	5	18.3	" "
	A · 38	10:08	5	5	15	0	0	0	4.2	" "
	Ax · 57	10:27	0	0	15	10	10	10	7.5	" "
	A · 48	10:37	0	35	15	15	20	15	16.7	" "
	A · 1	10:47	5	40	15	45	20	35	26.7	" "
	A · 11	11:26	0	20	20	40	35	5	20.0	" "
	A · 21	11:35	15	30	20	15	10	5	15.8	" "
	A · 31	11:44	0	5	15	10	0	5	5.8	" "
	Ax · 59	11:55	0	0	0	5	30	25	10.0	" "
	A · 41	12:41	0	5	40	40	30	25	23.3	" "
	A · 3	1:00	0	15	20	15	10	5	10.8	" "
	A · 13	1:15	5	15	5	5	10	5	7.5	

No. 1 PUSHER STACK TEST No. 3 8/22/85

APPENDIX E

STACK TEST FIELD DATA SHEETS

FORD MOTOR COMPANY
STATIONARY SOURCE ENVIRONMENTAL CONTROL OFFICE

SOURCE No. 1 PUSH CONTROL SCRUBBER
PLANT ROUGE STEEL
DATE 6/20/85
INITIALS DSW
TEST NO. 1

TEST No. 1

NOTES

Nozzle size .247, .249, .250 } .249

144 °F
STACK TEMP

ORIFICE COEFFICIENT CHECK

	SAMPLE TIME (Min.)	P_{bar} (In Hg)	Orifice Δh (In H_2O)	Meter Reading (ft^3)	Meter Inlet Temp. (°F)		Meter Outlet Temp. (°F)	
FINISH	695.0	29.48	1.0	044.523	70	71	70	70
START	685.0	29.48	1.0	038.826	70	71	70	70
AVG/NET	10.0	29.48	1.0	5.697	70.5		70	

$$\Delta H = \frac{(0.03175)\ (\Delta h)\ (P_{bar})}{(T_{m\text{-}out} + 460)} \left[\frac{(T_{m\text{-}avg} + 460)\ \theta}{(V_m)\ (P_{bar} + \Delta h/13.6)}\right]^2$$

$$\Delta H = \frac{(0.03175)(1.0)(29.48)}{(70 + 460)} \left[\frac{(70.3 + 460)/10}{(5.697)(29.48 + 1/13.6)}\right]^2$$

$$\Delta H = 1.75/1.77$$

FORD MOTOR COMPANY
STATIONARY SOURCE ENVIRONMENTAL CONTROL OFFICE

PITOT TUBE CALIBRATION DATA

SOURCE No. 1 PUSHER
PLANT ROUGE STEEL Co.
DATE 8/20/85
INITIALS DSW - TAD
TEST NO.

STACK DIMENSIONS 90" Ø
NIPPLE LENGTH 3 3/4"
STATIC PRESSURE -.30
BAROMETRIC PRESSURE 29.48
TIME

Port/ Point	Percent Diameter	Decimal Equiv.	Fraction Equiv.	Total Incl. Nipple	Standard Pitot Tube		"S" Pitot Tube No. 1		"S" Pitot Tube No. 2		Stack Temperature	
					ΔP	√ΔP	ΔP	√ΔP	ΔP	√ΔP	Dry Bulb	Wet Bulb
SE-1	3.2	2.88	2 7/8	6 5/8			.27					
2	10.5	9.45	9 7/16	13 3/16			.28					
3	19.4	17.46	17 7/16	21 3/16			.33					
4	32.3	29.07	29 1/16	32 13/16			.38					
SW-1							.58	.55				
2						T-1	.66	.66				
3						T-2		.67				
4								.65				
NW-1							.50					
2						T-1	.66					
3						T-2	.68					
4							.64					
NE-1							.22					
2							.25					
3							.30					
4							.35					
Total												
Average												

Pitot Tube No. 1 $Cp = \frac{\sqrt{\Delta P_{stnd}}}{\sqrt{\Delta P_{S-1}}}$ = _____ = _____

Pitot Tube No. 2 $Cp = \frac{\sqrt{\Delta P_{stnd}}}{\sqrt{\Delta P_{S-2}}}$ = _____ = _____

FORD MOTOR COMPANY
STATIONARY SOURCE ENVIRONMENTAL
CONTROL OFFICE

Source: No. 1 Push Control Scrubber
Plant: Rouge Steel
Date: 8/20/85
Initials: DSW
Test No.: 1

Sampling Train Information

Filter Type	115 A/E	Sample Box No.	7	Nozzle Diameter	.249
Filter No.	95	Probe No.	1	Nozzle Material	SS
Cyclone & Flask No.	—	Probe Material	PYREX	Meter Box No.	2
Silica Gel No.	7	Probe Length	5'	Meter Box ΔH	1.77

Leak Test Data

	Prelim. Reading	Time Date	Initial Reading	Time	Final Reading	Time
Meter and Orifice	ok 8.7	H_2O 8/20	ok 9" H_2O	816	ok	
Pump and Surge Tank	ok 20	PSIG 8/20	ok 22 PSIG	817		
Meter Box, Cord, Sample Box, Probe	ok 15" Hg <.005 CFM	8/20	ok 15" Hg <.005 CFM	818	ok 15" Hg <.005 CFM	1347
Pitot Tube Total Pressure Line	ok 7.1" H_2O	8/20	ok 5.5" H_2O	819	ok	
Pitot Tube Static Pressure Line	ok 7.2" H_2O	8/20	ok 6.5 H_2O	819		

Impinger Data

Impinger Number	1	2	3	4
Impinger Contents	H_2O	H_2O	—	Silica Gel
Final Volume (ml)	175	149	1	241.6
Initial Volume (ml)	150	150	0	238.5
Volume Collected(ml)	25	-1	1	3.1
			Total	28.1

clear & colorless

25 + 3.1 = 28.1

FORD MOTOR COMPANY
STATIONARY SOURCE ENVIRONMENTAL CONTROL OFFICE

$T_m = 75°F$

NOMOGRAPH C FACTOR DETERMINATION

4 % H_2O

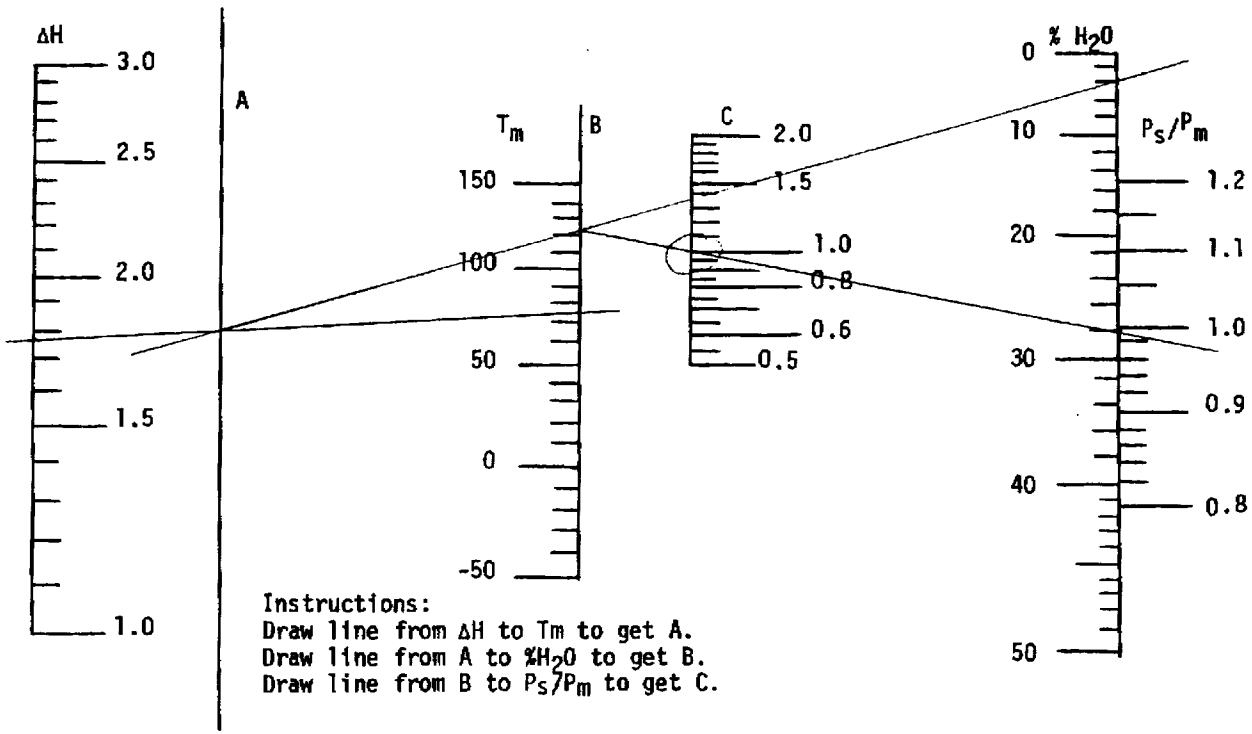

Instructions:
Draw line from ΔH to Tm to get A.
Draw line from A to %H_2O to get B.
Draw line from B to P_s/P_m to get C.

SOURCE No. 1 Fish Control Scrubber
PLANT Rouge Steel
DATE 8/20/85
INITIALS DSW
TEST NO. 1
METER BOX NO. 2
ΔH ORIFICE 1.77

AMBIENT TEMPERATURE 75°F
BAROMETRIC PRESSURE (P_{bar}) 29.55
STATIC PRESSURE (P_{sp}) -.30
$P_s = P_{bar} + P_{sp}$ =
(Assumed Δh) 1.5 Δh/13.6= .11
$P_m = P_{bar} + \Delta h/13.6$= 29.55 + .11 = 29.66
P_s/P_m = .996

C FACTOR 1.0
PITOT TUBE Cp .78
CORRECTED C FACTOR, (C_c)=
$(C)(C_p/.85)^2$ = 1.0 $(.78/.85)^2$
C_c = .84

FORD MOTOR COMPANY
STATIONARY SOURCE ENVIRONMENTAL CONTROL OFFICE

SOURCE #1 Fish Cooker Scrubber TEST NO. 1
PLANT Rouge Steel MIN/PNT 1.3 CORR. C FACTOR .84 P_{Bar} = 29.55 MCF 66135
DATE 6/20/75 INITIALS DSW NOM. SET POINT 60

Traverse Point Number	Clock Time	Meter Box Clock Time	Percent O_2 at Sample Point	Velocity Head, ΔP	$\sqrt{\Delta P}$	Nomograph ΔH Orifice	Meter Reading	Pump Vacuum	Selector Switch Number 1: Stack Temperature	2: Sample Box Temperature	3: Gas Temp. Leaving Last Impinger	4: Probe Temperature	5: Gas Temperature at Meter	6:
	Actual	Min	%	In.H_2O	In.$H_2O^{1/2}$	In.H_2O	Ft^3	In Hg	°F	°F	°F	°F	Inlet °F	Outlet °F
SE-1	0920	700.0	19.9	.41		1.28	046.718	4.0	144	248	57	*	67	68
2		701.3	20.0	.41		1.28	047.561	4.0	143	249	60		68	69
3		702.6	19.8	.41		1.28	048.399	4.0	142	247	59		68	68
4		703.9	19.6	.46		1.43	049.243	4.0	144	250	59		66	66
SW-1		705.2	20.0	.54		1.69	050.113	5.0	144	242	54		67	67
2		706.5	20.1	.70		2.15	051.039	7.0	147	245	58		67	67
3		707.8	19.7	.70		2.15	052.090	7.0	143	242	61		64	65
4		709.1	19.8	.65		2.0	053.138	6.0	143	252	61		64	65
NW-1		710.4	19.5	.60		1.85	054.173	5.5	144	250	57		64	65
2		711.7	19.3	.70		2.15	055.179	5.5	144	251	55		64	65
3		713.0	19.7	.75		2.38	056.234	7.0	145	257	52		65	65
4		714.3	20.0	.70		2.15	057.344	7.0	144	258	60		68	66
NE-1		715.6	19.0	.29		.73	058.444	2.0	147	258	61		67	68
2		716.9	18.9	.29		.89	059.092	2.0	145	247	59		67	68
3		718.2	19.7	.35		1.09	059.638	3.0	146	258	59		67	67
4		719.5	20.0	.45		1.40	060.569	4.0	142	252	58		66	66
	1345	720.8					061.405							
Total														
Average														

* PROBE TEMP OUT - KEPT AMPERES AT 2.4

FORD MOTOR COMPANY
STATIONARY SOURCE ENVIRONMENTAL CONTROL OFFICE

SOURCE No. 1 Pish Control Scrubber
PLANT Rouge STEEL
DATE 8/21/85
INITIALS DJW
TEST NO. T-2

NOTES

TEST NO. 2

STACK TEMP 144 °F
NOZZLE SIZE .249, .249, .250 } .249

ORIFICE COEFFICIENT CHECK

	SAMPLE TIME (Min.)	P_{bar} (In Hg)	Orifice Δh (In H_2O)	Meter Reading (ft^3)	Meter Inlet Temp. (°F)	Meter Outlet Temp. (°F)
FINISH						
START						
AVG/NET						

$$\Delta H = \frac{(0.03175)\ (\Delta h)\ (P_{bar})}{(T_{m\text{-}out} + 460)} \left[\frac{(T_{m\text{-}avg} + 460)\ \theta}{(V_m)\ (P_{bar} + \Delta h/13.6)} \right]^2$$

$$\Delta H = (0.03175) \left[_____ \right]^2$$

ΔH = 1.75/1.77

FORD MOTOR COMPANY
STATIONARY SOURCE ENVIRONMENTAL
CONTROL OFFICE

Source: No. 1 Push Control Scrubber
Plant: Rouge STEEL
Date: 8/21/85
Initials: DSW
Test No.: 2

Sampling Train Information

Filter Type	115 mm A/E	Sample Box No.	1	Nozzle Diameter	.249
Filter No.	96	Probe No.	1	Nozzle Material	SS
Cyclone & Flask No.	—	Probe Material	PYREX	Meter Box No.	2
Silica Gel No.	8	Probe Length	5'	Meter Box ΔH	1.77

Leak Test Data

	Prelim. Reading	Time Date	Initial Reading	Time	Final Reading	Time
Meter and Orifice	ok 25" Hg	7/21 820	→			
Pump and Surge Tank	ok 22" Hg	7/21 821	→			
Meter Box, Cord, Sample Box, Probe	ok 15" Hg <.005 CFM	8/20	ok 15" Hg @ <.005 CFM	8/21 826	ok 15" Hg <.005 CFM	1358 8/21
Pitot Tube Total Pressure Line			ok 7.6" H_2O	824 8/21		
Pitot Tube Static Pressure Line			ok 8.3" H_2O	823 8/21		

Impinger Data

Impinger Number	1	2	3	4
Impinger Contents	H_2O	H_2O	—	Silica Gel
Final Volume (ml)	178	151	0	226.8
Initial Volume (ml)	150	150	0	223.4
Volume Collected(ml)	28	1	0	3.4
			Total	32.4

CLEAR & Colorless

29 + 3.4 = 32.4

FORD MOTOR COMPANY
STATIONARY SOURCE ENVIRONMENTAL CONTROL OFFICE

$T_m = 65\ ^\circ F$

4% H_2O

NOMOGRAPH C FACTOR DETERMINATION

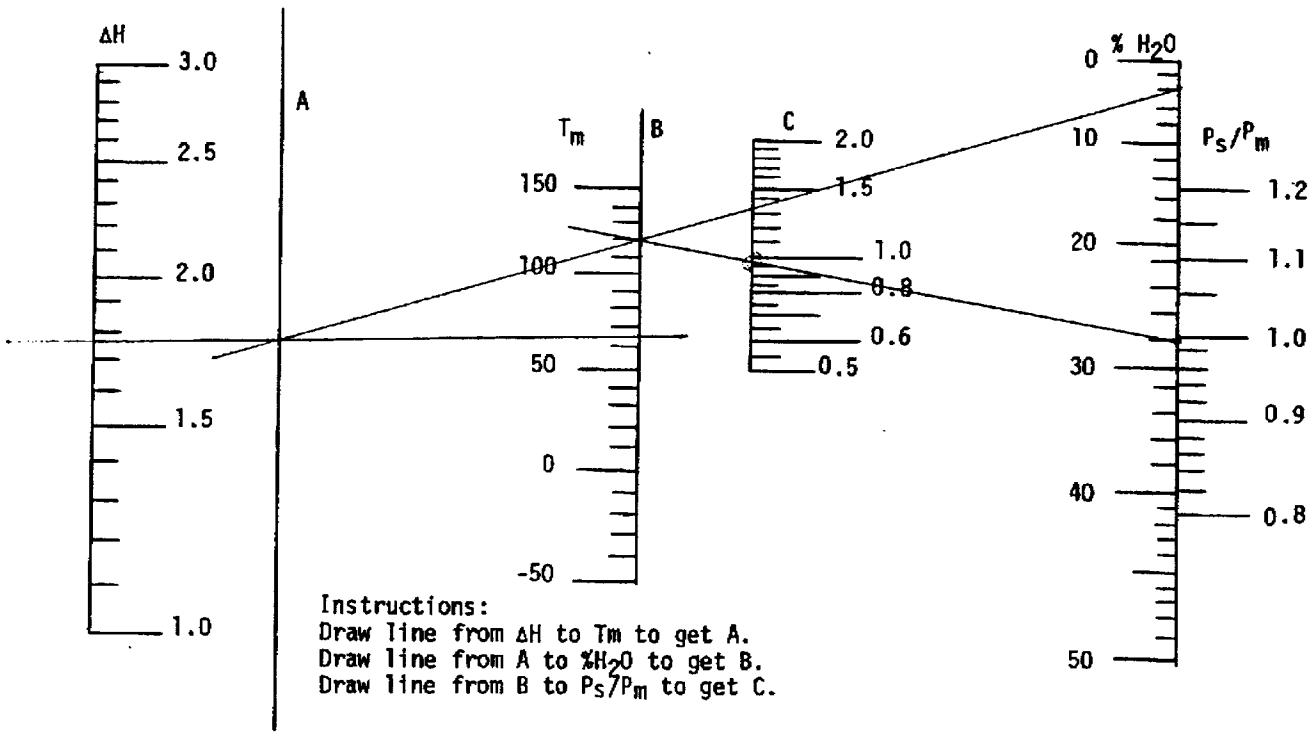

Instructions:
Draw line from ΔH to Tm to get A.
Draw line from A to $\%H_2O$ to get B.
Draw line from B to P_s/P_m to get C.

SOURCE No 1 Push Control Scrubber
PLANT Rouge Steel
DATE 8/21/85
INITIALS DSV
TEST NO. 2
METER BOX NO. 2
ΔH ORIFICE LTT

AMBIENT TEMPERATURE
BAROMETRIC PRESSURE (P_{bar}) 29.57
STATIC PRESSURE (P_{sp}) -.30
$P_s = P_{bar} + P_{sp} =$
(Assumed Δh) Δh/13.6=
$P_m = P_{bar} + \Delta h/13.6 =$
$P_s/P_m =$ .996

C FACTOR .97
PITOT TUBE Cp .78
CORRECTED C FACTOR, (C_c)=
$(C)(C_p/.85)^2 =$ .97 $(.78/.85)^2$
$C_c =$ .82

FORD MOTOR COMPANY
STATIONARY SOURCE ENVIRONMENTAL CONTROL OFFICE

SOURCE NO-1 Rod Control Scrubber TEST NO. 2
PLANT Rouge Steel MIN/PNT 1.3
DATE 8/21/87 INITIALS DSW

CORR. C FACTOR .82
NOM. SET POINT .61

P_{Bar} = 29.59 MCF 60135

Traverse Point Number	Clock Time	Meter Box Clock Time	Percent O_2 at Sample Point	Velocity Head, ΔP	$\sqrt{\Delta P}$	Nomograph ΔH Orifice	Meter Reading	Pump Vacuum	Selector Switch Number 1: Stack Temperature	2: Sample Box Temperature	3: Gas Temp. Leaving Last Impinger	4: Probe Temperature	5: Gas Temperature at Meter Inlet	6: Gas Temperature at Meter Outlet
	Actual	Min	%	In.H_2O	In.$H_2O^{1/2}$	In.H_2O	Ft^3	In Hg	°F	°F	°F	°F	°F	°F
NE-1	0848	730.0	20.3	.19		.56	064.818	1.0	~~144~~	249	57	*	62	62
2		731.3	17.8	.30		.90	065.365	2.0	141	252	59		62	63
3		732.6	19.6	.33		1.0	066.084	3.0	139	250	58		62	63
4		733.9	19.2	.43		1.3	066.842	3.5	147	252	59		62	63
NW-1		735.2	17.9	.58		1.72	067.711	5.0	149	251	59		62	63
2		736.5	20.5	.73		2.19	068.682	7.0	143	245	56		63	64
3		737.8	19.8	.83		2.46	069.775	8.5	144	245	56		64	64
4		739.1	19.2	.67		2.00	070.924	6.0	146	247	56		63	64
SW-1		740.4	19.6	.55		2.67	072.022	5.0	145	250	58		63	64
2		741.7	19.8	.76		2.30	073.024	8.0	145	250	56		63	63
3		743.0	18.1	.93		2.19	074.148	8.5	152	253	55		63	63
4		744.3	19.6	.76		2.30	075.316	8.5	145	255	60		64	64
SE-1		745.6	19.8	.20		.68	076.466	1.0	145	247	63		65	66
2		746.9	19.6	.25		.75	077.080	1.5	139	247	63		66	67
3		748.2	18.8	.38		1.14	077.730	4.0	151	247	63		66	67
4	1357	749.5	19.7	.44		1.33	078.538	4.0	~~154~~ 153	248	60		66	67
		750.8					079.392							
Total														
Average														

* PROBE TEMP OUT - KEPT AMPERES AT 2.4

FORD MOTOR COMPANY
STATIONARY SOURCE ENVIRONMENTAL CONTROL OFFICE

SOURCE No. 1 Pish Central Scrubber
PLANT RONGE STEEL
DATE 6/22/85
INITIALS DSW
TEST NO. T-3

NOTES

TEST No. 3

.249
.250 } .249 NOZZLE SIZE
.249

144°F STACK TEMP

ORIFICE COEFFICIENT CHECK

	SAMPLE TIME (Min.)	P_{bar} (In Hg)	Orifice Δh (In H_2O)	Meter Reading (ft^3)	Meter Inlet Temp. (°F)	Meter Outlet Temp. (°F)
FINISH						
START						
AVG/NET						

$$\Delta H = \frac{(0.03175)\ (\Delta h)\ (P_{bar})}{(T_{m\text{-}out} + 460)} \left[\frac{(T_{m\text{-}avg} + 460)\ \theta}{(V_m)\ (P_{bar} + \Delta h/13.6)} \right]^2$$

$$\Delta H = (0.03175) \left[\quad \right]^2$$

ΔH = 1.75/1.77

FORD MOTOR COMPANY
STATIONARY SOURCE ENVIRONMENTAL
CONTROL OFFICE

Source: No. 1 Push Central Scrubber
Plant: Rouge STEEL
Date: 8/22/95
Initials: DSW

Test No.: 3

Sampling Train Information

Filter Type	115mm A/E	Sample Box No.	1	Nozzle Diameter	.249
Filter No.	97	Probe No.	1	Nozzle Material	SS
Cyclone & Flask No.	—	Probe Material	PYREX	Meter Box No.	2
Silica Gel No.	9	Probe Length	5'	Meter Box ΔH	1.77

Leak Test Data

	Prelim. Reading	Time / Date	Initial Reading	Time	Final Reading	Time
Meter and Orifice			ok 7.6" H_2O		ok	
Pump and Surge Tank			ok 23 PSIG			
Meter Box, Cord, Sample Box, Probe	ok <.005 CFM @ 15" Hg	7-21-95 1743	ok <.005 CFM @ 17" Hg	805	ok <.005 CFM @ 14" Hg	1315
Pitot Tube Total Pressure Line			ok <.8" H_2O	804	ok	
Pitot Tube Static Pressure Line			ok 7.3" H_2O	803		

Impinger Data

Impinger Number	1	2	3	4
Impinger Contents	H_2O	H_2O	—	Silica Gel
Final Volume (ml)	175	151	0	233.4
Initial Volume (ml)	150	150	0	230.1
Volume Collected(ml)	25	1	0	3.3
			Total	29.3

CLEAR & Colorless

26 + 3.3 = 29.3

FORD MOTOR COMPANY
STATIONARY SOURCE ENVIRONMENTAL CONTROL OFFICE

SOURCE No. 1 Push Control Scrubber TEST NO. 3 CORR. C FACTOR .82 P_{Bar} = 29.66 MCF 1.0135
PLANT Rouge STEEL MIN/PNT 1.3 NOM. SET POINT .61
DATE 3/22/95 INITIALS DSW

Traverse Point Number	Clock Time	Meter Box Clock Time	Percent O_2 at Sample Point	Velocity Head, ΔP	$\sqrt{\Delta P}$	Nomograph ΔH Orifice	Meter Reading	Pump Vacuum	Selector Switch Number 1: Stack Temperature	2: Sample Box Temperature	3: Gas Temp. Leaving Last Impinger	4: Probe Temperature	5: Gas Temperature at Meter	6: Gas Temperature at Meter
	Actual	Min	%	In.H_2O	In.$H_2O^{1/2}$	In.H_2O	Ft^3	In Hg	°F	°F	°F	°F	Inlet °F	Outlet °F
SE-1	0848	755.0	20.3	.25		.76	080.727	2.0	144	250	58	*	61	62
2		756.3	19.7	.30		.92	081.372	3.0	142	253	58		61	62
3		757.6	19.2	.35		1.08	082.124	4.0	138	251	64		64	64
4		758.9	19.8	.43		1.31	082.914	5.0	148	252	67		66	66
SW-1		760.2	19.4	.52		1.57	083.762	6.5	144	253	63		67	67
2		761.5	19.9	.65		1.98	084.705	8.0	140	249	57		65	66
3		762.8	20.1	.77		2.39	085.719	11.0	146	251	54		66	68
4		764.1	19.9	.76		2.30	086.747	10.5	147	251	55		65	67
NW-1		765.4	16.7	.44 ~~.28~~		1.33	088.009	6.0	147	252	57		65	69
2		766.7	19.4	.65		1.98	088.705	8.5	149	260	61		67	67
3		768.0	18.6	.65		1.98	089.944	8.5	151	262	61		67	65
4		769.3	17.0	.62		1.87	091.020	8.5	150	253	61		68	68
NE-1		770.6	20.6	.22		.65	092.210	3.0	142	249	65		67	68
2		771.9	18.0	.28		.90	092.776	2.5	146	250	62		69	70
3		773.2	19.2	.35		1.08	093.527	5.0	150	253	62		69	71
4	1315	774.5	19.9	.44		1.33	094.312	6.0	153	253	64		69	71
		775.8					095.152							
Total														
Average		* PROBE TEMP OUT - KEPT AMPERES AT 2.4												

APPENDIX F

PRODUCTION DATA

TEST 1

ROUGE STEEL COMPANY
NO. 1 PUSH CONTROL SCRUBBER
AUGUST 20, 1985

OVEN No.	TIME OF PUSH	TIME CHARGED	NET CHARGE DURATION HRS MIN	Lb. Coal Charged	Scrubber ΔP (in Hg)
3	0920 8/20	1441 8/19	18:39	33,600	
13	0928	1450	18:38	N/S	3.7 ~ 50" H_2O
23	0948	N/R	—	N/S	235 AMPS
33	1007	N/R	—	N/S	
43	1016	1643	17:59	32,960	
57x	1027	1037 8/19	23:50	32,340	
5	1047	1709 8/19	17:38	N/S	
15	1055	1748	17:07	30,600	
25	1113	1758	17:15	32,860	
35	1131	1815	17:16	33,960	
45	1146	1824	17:22	34,780	
59	1202	1248	23:14	30,600	
7	1253	1846	18:07	34,060	
17	1306	1904	18:02	33,400	
27	1323	1916	18:07	35,060	
37	1342	2058	16:44	33,840	3.7 230 AMPS
				33,170 Avg. of 12	
				Total lb charged based on 12 is 530,720	

TEST 2

ROUGE STEEL COMPANY
NO. 1 PUSH CONTROL SCRUBBER
AUGUST 21, 1985

OVEN NO.	TIME OF PUSH	TIME CHARGED	NET CHARGE DURATION HRS MIN	Lb. Coal Charged	Scrubber ΔP (In. Hg)
39	0848	1459	17:49	32,640	
49	0930	1537	17:53	33,100	
2	0948	1545	18:03	31,780	
12	1010	N/R	—	N/R	
22	1022	1718	17:04	33,780	
57x	1032	—	—	—	
32	1049	1731	17:08	33,880	
42	1058	1740	17:18	33,100	3.7
4	1108	1747	17:21	33,920	
14	1124	1800	17:24	30,320	
24	1134	1827	17:07	33,840	3.7
64x	1145	—	—	—	
34	1303	1857	18:06	33,800	
44	1313	1926	17:47	33,680	235 amps
6	1323	2051	16:32	34,460	
16	1356	2145	16:11	33,620	
				33,220 Avg.	
				Total lb charged based on 19 is 531,520	

TEST 3

ROUGE STEEL COMPANY
NO. 1 PUSH CONTROL SCRUBBER
AUGUST 22, 1985

OVEN NO.	TIME OF PUSH	TIME CHARGED	NET CHARGE DURATION HRS MIN	lb. Coal Charged	Scrubber ΔP (In. Hg)
36	0848	1523	17:25	35,460	
46	0900	1529	17:31	30,940	
8	0928	—	—	—	
18	0940	—	—	—	
28	0952	1727	16:25	33,620	3.7
38	1000	1750	16:10	33,660	
57x	1027	1102	23:25	33,220	
48	1037	1814	16:23	33,340	
1	1047	1833	16:14	33,700	
11	1126	1844	16:42	34,100	3.7
21	1135	1853	16:42	33,140	
31	1144	1938	16:06	32,880	
59x	1155	—	—	—	
41	1242	1950	16:52	33,360	
3	1300	1957	17:03	33,060	
13	1314	2123	15:51	34,200	
				33,440 Avg.	
				Total lb charged based on 13 is 535,040	

APPENDIX G

LABORATORY DATA SHEETS

NO. 1 PUSH CONTROL SCRUBBER
ROUSE STEEL COMPANY
PARTICULATE, CONDENSABLE SURVEY

Aug. 20-22, 1985

TEST NO	FILTER & DESIC NO	SAMPLE ID	INITIAL WEIGHT (Gm) 1	2	Avg.	FINAL WEIGHT (Gm) 1	2	Avg.	NET GAIN (Gm)	ml
1	95	FILTER	2.2849	2.2851	2.2850	2.2918	2.2920	2.2919	0.0069	
2	96		2.2763	2.2765	2.2764	2.2839	2.2841	2.2840	0.0076	
3	97		2.3044	2.3044	2.3044	2.3109	2.3110	2.3110	0.0066	
1	23	PROBE, NOZZLE BP	138.7842	138.7844	138.7843	138.7973	138.7975	138.7974	0.0131	245
2	17		124.1847	124.1849	124.1848	124.2014	124.2016	124.2015	0.0167	345
3	18		116.5822	116.5823	116.5823	116.5905	116.5907	116.5906	0.0083	225
1	4	IMPINGER	131.6999	131.6999	131.6999	131.7128	131.7128	131.7128	0.0129	425
2	20		113.7010	113.7012	113.7011	113.7197	113.7199	113.7198	0.0187	430
3	29		115.2221	115.2223	115.2222	115.2360	115.2362	115.2361	0.0139	425
AH	39	250ml ACETONE	122.1072	122.1074	122.1073	122.1075	122.1075	122.1075	0.0002	250
AII	9	100ml H_2O	125.1658	125.1658	125.1658	125.1661	125.1661	125.1661	0.0003	100

BLANK CORRECTIONS

TEST NO.	PROBE WASH (ACETONE) Volume Acetone (ml)	Correction (gm)	Net Gain (Gm)	CONDENSABLES (D.I. H_2O) Volume H_2O (ml)	Correction (gm)	Net Gain (Gm)
1	245	.0002	0.0129	300	.0009	0.0120
2	395	.0003	0.0165	300	.0009	0.0178
3	225	.0002	0.0081	300	.0009	0.0130

APPENDIX H

SAMPLE CALCULATIONS

SAMPLE CALCULATIONS

GAS FLOW ANALYSIS

SOURCE - ROUGE STEEL CO. NO.1 PUSH CONTROL SCRUBBER

TEST - 1

MEASURED DATA

STACK DIAMETER	DS	90.0	IN.
STACK GAS TEMPERATURE	TS	144.	DEG F
STACK STATIC PRESSURE	PSP	-0.30	INCHES H20
BAROMETRIC PRESSURE	PBAR	29.55	INCHES HG
PITOT TUBE COEFFICIENT	CP	0.78	
AVERAGE SQ. ROOT OF VELOCITY PRESSURE	DELPV	0.714	IN.H20**.5

SAMPLE CALCULATIONS

MOLECULAR WEIGHT OF WET EXHAUST GAS

MWW

MWW = (MWD /100.) * (100.- %M) + 0.18* %M

MWW = (29.00 /100.) * (100.- 8.222) + 0.18* 8.222

MWW = 28.10 LB/LB-MOLE

STACK GAS PRESSURE

PS

PS = PBAR + (PSP / 13.6)

PS = 29.55 + (-0.3000 / 13.6)

PS = 29.53 IN. HG.

STACK GAS VELOCITY AT STACK CONDITIONS

VS

VS = 5128.8 * CP * DELPV * SQRT((TS + 460.) / (PS * MWW))

VS = 5128.8 * 0.7800 * 0.7136 * SQRT((144.2 + 460.) / (29.53 * 28.10))

VS = 2436. FT./MIN.

STACK GAS VELOCITY AT STANDARD CONDITIONS

VSTD

VSTD = 17.647 * VS * PS / (TS + 460.)

VSTD = 17.647 * 2436. * 29.53 / (144.2 + 460.)

VSTD = 2101. FT./MIN.

STACK AREA - ROUND

AS

AS = PI * (DS **2) / 4. / 12.**2

AS = 3.142 * (90.00 **2) / 4. / 12.**2

AS = 44.18 SQ. FT.

SAMPLE CALCULATIONS

STACK GAS FLOW — QS

QS = VS * AS

QS = 2436. * 44.18

QS = 107600. ACFM

STACK GAS FLOW AT WET STANDARD CONDITIONS — QWSTD

QWSTD = VSTD * AS

QWSTD = 2101. * 44.18

QWSTD = 92830. WSCFM

STACK GAS FLOW AT DRY STANDARD CONDITIONS — QDSTD

QDSTD = QWSTD * (1. -(%M /100.))

QDSTD = 92830. * (1. -(8.222 /100.))

QDSTD = 85200. DSCFM

SAMPLE CALCULATIONS

PARTICULATE ANALYSIS

SOURCE - ROUGE STEEL CO. NO.1 PUSH CONTROL SCRUBBER

TEST - 1

MEASURED DATA

METERED SAMPLE VOLUME	VM	14.687	ACT. CU. FT.
METER CORRECTION FACTOR	DGMCF	1.0135	
AVERAGE METER TEMPERATURE	TM	66.	DEG F
AVERAGE ORIFICE PRESSURE DROP	DELH	1.62	INCHES H20
VOLUME OF H20 CONDENSATE	VI	25.0	ML
WEIGHT OF H20 ADSORBED	VSG	3.1	GRAMS
NOZZLE DIAMETER	DN	0.2490	INCHES
TOTAL SAMPLE TIME	THETA	21.	MINUTES
WEIGHT OF PROBE CATCH	WPROBE	0.0129	GRAMS
WEIGHT OF FILTER CATCH	WF	0.0069	GRAMS
WEIGHT OF CONDENSABLES	WC	0.0120	GRAMS

SAMPLE CALCULATIONS

CORRECTED VOLUME OF GAS THROUGH METER - STANDARD CONDITIONS — VMSTD

VMSTD = 17.647 *VM * (PBAR + DELH / 13.6)/(TM + 460.) * DGMCF

VMSTD = 17.647 * 14.69 * (29.55 + 1.619 / 13.6)/(66.38 + 460.) * 1.014

VMSTD = 14.81 CU. FT.

VOLUME OF WATER VAPOR CONDENSED - STANDARD CONDITIONS — VWSTD

VWSTD = 0.0472 * (VI + VSG)

VWSTD = 0.0472 * (25.00 + 3.100)

VWSTD = 1.326 CU. FT.

TOTAL SAMPLE VOLUME (CORRECTED) AT STANDARD CONDITIONS — VTSTD

VTSTD = VMSTD + VWSTD

VTSTD = 14.81 + 1.326

VTSTD = 16.13 CU. FT.

PERCENT MOISTURE IN EXHAUST GAS — %M

%M = 100. * VWSTD / VTSTD

%M = 100. * 1.326 / 16.13

%M = 8.222 %

NOZZLE AREA — AN

AN = PI * (DN **2) / 4. / 12.**2

AN = 3.142 * (0.2490 **2) / 4. / 12.**2

AN = 3.38E-04 SQ. FT.

SAMPLE CALCULATIONS

ISOKINETIC RATIO — I

I = 100. * VTSTD / (THETA * AN * VSTD)

I = 100. * 16.13 / (20.80 * 3.38E-04* 2101.)

I = 109.2 %

TOTAL WEIGHT OF PARTICULATE MATTER COLLECTED — WPT

WPT = WPROBE + WF

WPT = 0.01290 + 0.00690

WPT = 0.01980 GRAMS

PARTICULATE CONCENTRATION AT STACK CONDITIONS — CSTK

CSTK = 15.43 * 17.647 * PS * WPT / (VTSTD * (TS + 460.))

CSTK = 15.43 * 17.647 * 29.53 * 0.01980 / (16.13 * (144.2 + 460.))

CSTK = 0.01633 GR/ACF

PARTICULATE WEIGHT CONCENTRATION AT DRY STANDARD CONDITIONS — WCD

WCD = 849.0 * WPT / (VMSTD * MWD)

WCD = 849.0 * 0.01980 / (14.81 * 29.00)

WCD = 0.03915 #/1000# DRY

PARTICULATE WEIGHT CONCENTRATION AT WET STANDARD CONDITIONS — WCW

WCW = 849.0 * WPT / (VTSTD * MWW)

WCW = 849.0 * 0.01980 / (16.13 * 28.10)

WCW = 0.03709 #/1000# WET

PARTICULATE FLOW RATE — WR

WR = 0.132 * WPT * QWSTD / VTSTD

WR = 0.132 * 0.01980 * 92830. / 16.13

WR = 15.04 LB/HR

SAMPLE CALCULATIONS

CONDENSABLE CONCENTRATION AT STACK CONDITIONS — CSTK-C

CSTK-C =15.43* 17.647* PS * WC / (VTSTD * (TS + 460.)

CSTK-C =15.43* 17.647* 29.53 * 0.01200 / (16.13 * (144.2 + 460.)

CSTK-C =0.00990 GR/ACF

CONDENSABLE WEIGHT CONCENTRATION AT DRY STANDARD CONDITIONS — WCD-C

WCD-C = 849.0 * WC / (VMSTD * MWD)

WCD-C = 849.0 * 0.01200 / (14.81 * 29.00)

WCD-C = 0.02373 #/1000# DRY

CONDENSABLE WEIGHT CONCENTRATION AT WET STANDARD CONDITIONS — WCW-C

WCW-C = 849.0 * WC / (VTSTD * MWW)

WCW-C = 849.0 * 0.01200 / (16.13 * 28.10)

WCW-C = 0.02248 #/1000# WET

CONDENSABLE FLOW RATE — WR-C

WR-C = 0.132 * WC * QWSTD / VTSTD

WR-C = 0.132 * 0.01200 * 92830. / 16.13

WR-C = 9.115 LB/HR

SAMPLE CALCULATIONS

A. Determination of loss - Coal to Coke

Assumptions:

1. All moisture in the coal is driven off
2. Five sixths of the volatile coal content is driven off--calculated on an "as-received" basis.

Results of Analyses from Rouge Steel Coke Oven Laboratory

	Aug.20	Aug.21	Aug.22
% Moisture	7.30	7.34	7.20
% Volatiles (Dry)	32.40	32.20	31.74
% Volatiles (As Rec'd)	30.03	29.84	29.45

(Results shown above correspond with analyses of coal samples obtained on August 19-21--when the ovens tested were charged.)

Assuming that the total losses from coal to coke are from the loss of moisture and 5/6 of the volatiles, the coal/coke conversion factors are determined as follows:

	Test 1	Test 2	Test 3
5/6 x % Volatiles (As Rec'd)	25.03	24.87	24.54
% Moisture	7.30	7.34	7.20
Total Losses (5/6 V + M)	32.33	32.21	31.74
Conversion Factor	.6767	.6779	.6826

B. Determination of Emission Rate in Lb Particulate/Ton of Coke Pushed

$$\frac{\text{Lb Particulate}}{\text{Ton Coke Pushed}} = \frac{\text{Emissions Lb}}{\text{Hr}} \cdot \frac{\text{Hr}}{60\ \text{Min.}} \cdot \frac{\text{Min}}{\text{Test}} \cdot \frac{\text{Test}}{\text{Lb Coal}} \cdot \frac{\text{Lb Coal}}{\text{Lb Coke}} \cdot \frac{2000\ \text{Lb}}{\text{Ton}}$$

Test 1

$$0.029 = \frac{15.0}{60} \cdot \frac{20.8}{530{,}700} \cdot \frac{}{.6767} \cdot \frac{}{2000}$$

Test 2

$$0.0341 = \frac{17.7}{60} \cdot \frac{20.8}{531{,}500} \cdot \frac{}{.6779} \cdot \frac{}{2000}$$

Test 3

$$0.0205 = \frac{10.8}{60} \cdot \frac{20.8}{535{,}000} \cdot \frac{}{.6826} \cdot \frac{}{2000}$$

APPENDIX I

CALIBRATION DATA

FORD MOTOR COMPANY
STATIONARY SOURCE ENVIRONMENTAL CONTROL OFFICE

PITOT TUBE CALIBRATION DATA

SOURCE Wind Tunnel
PLANT SSECD
DATE 5-17-85
INITIALS TD
TEST NO. Cauberman

STACK DIMENSIONS 5' PROBES
NIPPLE LENGTH
STATIC PRESSURE
BAROMETRIC PRESSURE
TIME

Port/ Point	Percent Diameter	Decimal Equiv.	Fraction Equiv.	Total Incl. Nipple	Standard Pitot Tube		"S" Pitot Tube No. 1		"S" Pitot Tube No. 2		Stack Temperature	
					ΔP	√ΔP	ΔP	√ΔP	ΔP	√ΔP	Dry Bulb	Wet Bulb
Pt 8"			High		.54	.735	.92	.959	.87	.933		
			Med		.37	.608	.61	.781	.58	.761		
			Lo		.20	.447	.33	.574	.32	.566		
			Hi				.77			.79		
			Med				.78	.78		.80	.79	
			Lo				.78			.79		
Total												
Average							.78			.79		

Pitot Tube No. 1 $Cp = \frac{\sqrt{\Delta P_{stnd}}}{\sqrt{\Delta P_{S-1}}}$ = _____ = .78

Pitot Tube No. 2 $Cp = \frac{\sqrt{\Delta P_{stnd}}}{\sqrt{\Delta P_{S-2}}}$ = .79 = _____

SSFCO METER BOX NO. 2 CALIBRATION DATA

DATE:07/02/85
INITIALS:JMM
BAR. PRESS.: 29.35

STD. METER NO.: 916592
BOX-METER NO.: 265284
NO. OF TRIALS: 9

TRIAL NO.	TIME MIN.	TEMP DG F	DEL P IN.H2O	START CU.FT.	FINISH CU.FT.	NET CU.FT.	VOL.,STP SCF	CORR.VOL. SCF
		STANDARD METER DATA (CORR. FACTOR 1.0011)						
1	15.0	78.0	-0.250	930.390	936.343	5.953	5.727	5.734
2	15.0	77.5	-0.270	936.343	943.789	7.446	7.170	7.179
3	15.0	77.5	-0.280	943.789	952.308	8.519	8.203	8.212
4	10.0	78.0	-0.330	952.308	958.651	6.343	6.101	6.108
5	10.0	78.0	-0.350	958.651	965.522	6.871	6.609	6.616
6	10.0	78.0	-0.380	965.522	973.078	7.556	7.267	7.275
7	10.0	78.0	-0.420	973.078	981.103	8.025	7.718	7.726
8	8.0	78.0	-0.470	981.103	988.346	7.243	6.965	6.972
9	8.0	78.0	-0.540	988.346	996.316	7.970	7.662	7.671

TRIAL NO.	T-IN DG F	T-OUT DG F	DEL P IN.H2O	START CU.FT.	FINISH CU.FT.	STP VOL. SCF	DELTA H	CORR. DEL H
			METER BOX DATA					
1	79.3	76.3	0.500	457.538	463.463	5.715	1.86	1.86
2	84.0	80.6	0.750	463.463	470.855	7.077	1.81	1.76
3	88.0	84.6	1.000	470.855	479.358	8.088	1.84	1.78
4	91.0	87.0	1.250	479.358	485.715	6.022	1.83	1.78
5	93.0	88.6	1.500	485.715	492.597	6.502	1.88	1.82
6	94.6	89.6	1.750	492.597	500.169	7.143	1.82	1.76
7	95.3	90.6	2.000	500.169	508.233	7.602	1.83	1.77
8	96.0	91.0	2.500	508.233	515.530	6.882	1.78	1.73
9	97.0	91.6	3.000	515.530	523.592	7.605	1.75	1.72

AVERAGE METER CORRECTION FACTOR: 1.0135
AVERAGE CORRECTED CALIBRATION CONSTANT (DELTA H): 1.77