Note: This is a reference cited in *AP 42, Compilation of Air Pollutant Emission Factors, Volume I Stationary Point and Area Sources.* AP42 is located on the EPA web site at www.epa.gov/ttn/chief/ap42/

The file name refers to the reference number, the AP42 chapter and section. The file name "ref02_c01s02.pdf" would mean the reference is from AP42 chapter 1 section 2. The reference may be from a previous version of the section and no longer cited. The primary source should always be checked.

AP42 Section:	11.27
Background Chapter	4
Reference:	5
Title:	Source Sampling Report for Indusmin Incorporated: Spruce Pine, NC, Pace Laboratories, Inc., Charlotte, NC, January 1990.

pace. laboratories, inc.

FELDSPAR

AP-42 Section 11.27
Reference —
Report Sect. 4
Reference 5

SOURCE SAMPLING REPORT

FOR

INDUSMIN INCORPORATED

Spruce Pine, North Carolina

Reviewed by:
PACE LABORATORIES, INC.
Charlotte, North Carolina

Paul R. Jenkins, Jr.
January 1990

Performed by:
PACE LABORATORIES, INC.
Charlotte, North Carolina

Richard B. McCain, III
January 1990

pace. laboratories, inc

TABLE OF CONTENTS

INTRODUCTION	1
SUMMARY OF RESULTS	3
PROCESS DESCRIPTION	5
LOCATION OF SAMPLING POINTS	6
SAMPLING AND ANALYTICAL PROCEDURES	8
APPENDICES	9

A. Summary of Results

B. Field Data

C. Process Data

D. Test Participants

E. Sampling and Analytical Procedures

F. Calibration Data

INTRODUCTION

Source sampling was performed on the dust collector stack at Indusmin, Inc., Spruce Pine, North Carolina to determine particulate emissions. Three sampling runs were made on January 4, 1990 at the sampling locations shown on Figure 1.

The measurements of stack gas flow rate and pollutant concentrations were made according to U.S. Environmental Protection Agency and the North Carolina Department of Environment, Health, and Natural Resources (N.C. DEHNR) recommendations.

The following sections of the report detail the summary of results, the process and its operation, the location of the sampling points and the sampling and analytical procedures used.

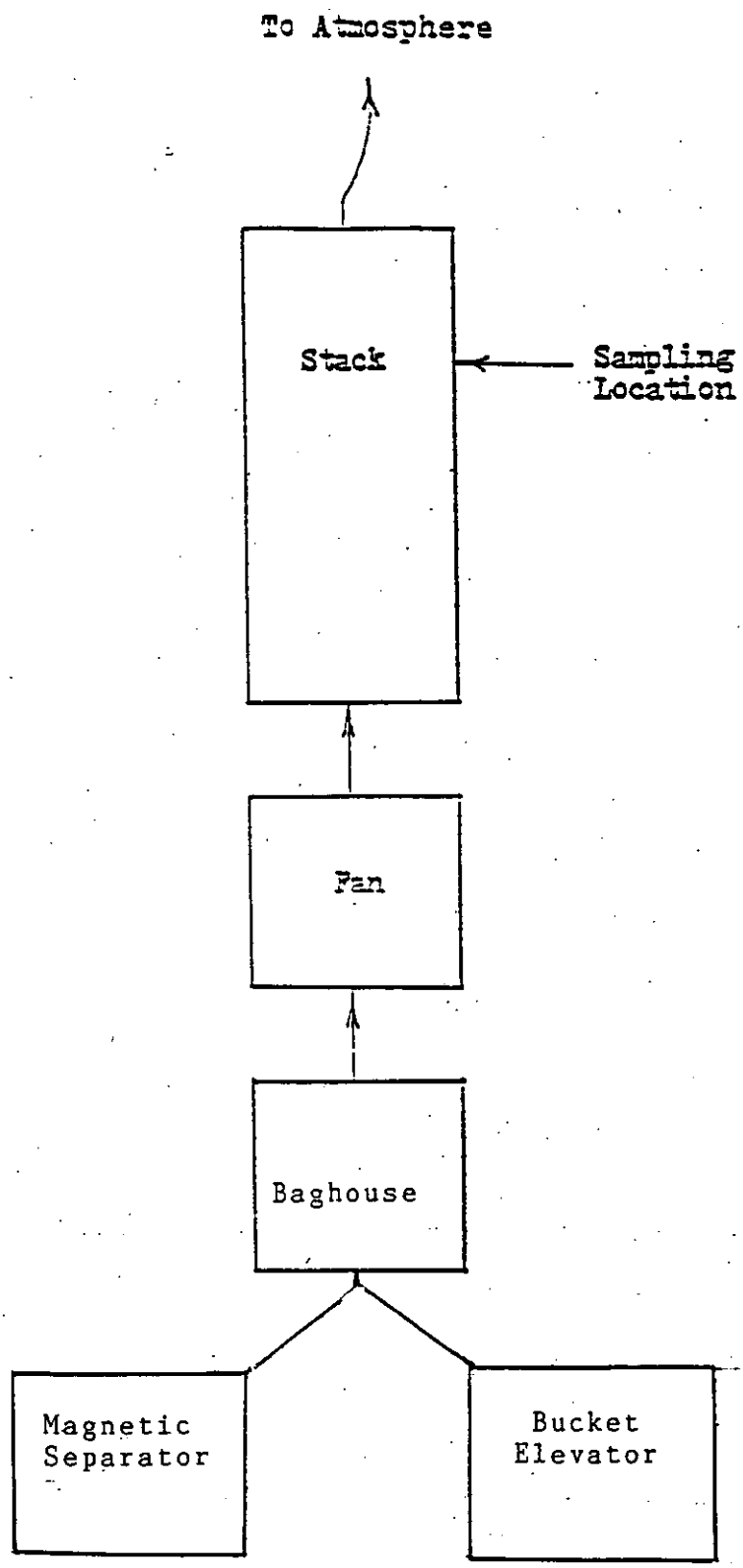

FLOW DIAGRAM

Figure 1

SUMMARY OF RESULTS

Table 1 presents the summary of results from the particulate sampling. The mean particulate concentration was 0.0015 grains per dry standard cubic foot and the mean particulate emission rate was 0.154 pounds per hour.

pace. laboratories, inc.

TABLE 1

SUMMARY OF RESULTS, PARTICULATE SAMPLING

Run Number	1	2	3
Date	01/04/90	01/04/90	01/04/90
% Isokinetic	94.45	95.66	97.74
Volume of Gas Sampled SCF * Dry	43.945	45.849	45.242
Stack Gas Flow Rate, SCFM * Dry	12161.4	12429.0	12292.9
Stack Gas Flow Rate, ACFM	13126.0	13617.6	13246.3
Particulate:			
Catch, mgrams	5.60	3.84	3.33
Concentration, grains/ SCF * Dry	0.0020	0.0013	0.0011
Emission Rate, lbs/hr	0.205	0.137	0.119

*68°F, 29.92 in. Hg
**Nozzle, probe, filter

35.31

PROCESS DESCRIPTION AND OPERATION

The Micropulsair B-289 baghouse dust collector at Indusmin Inc., Spruce Pine, N.C., collects dust produced from a bucket elevator and magnetic separator used in the production and processing of feldspar. The baghouse dust collector has 289 eight foot long bags with a total filter area of 2722 square feet .

The emissions from the rare earth magnetic separator and bucket elevator pass though a baghouse collector, I.D. fan, and to the atmosphere.

LOCATION OF SAMPLING POINTS

The dimensions of the stack and the location of the sampling points are shown in Figure 2. The stack cross section was divided into 24 equal areas. The ports were labeled A and B. Each point was sampled for a period of 2.5 minutes per point which yielded a total test time of 60 minutes per run. The number of sampling points was determined by the distance from the last disturbance in the gas flow as outlined in Method 1, Federal Register, Volume 48, No. 191, 30 September 1983.

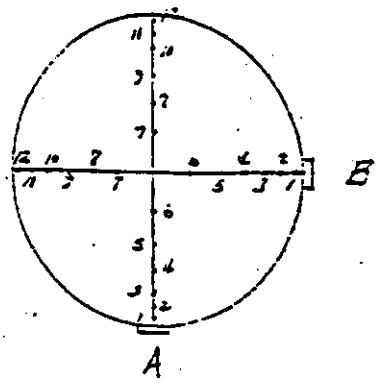

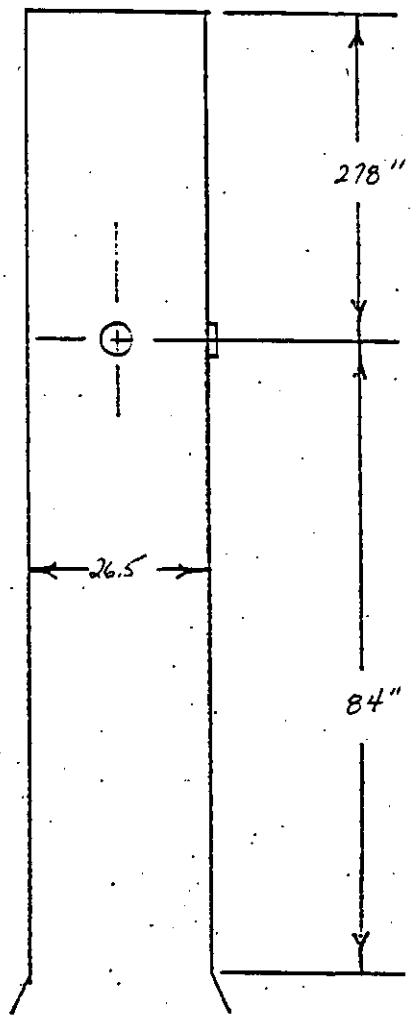

LOCATION OF SAMPLING POINTS

Figure 2

SAMPLING AND ANALYTICAL PROCEDURES

All sampling and analytical procedures used were those recommended by the U.S. Environmental Protection Agency and the N.C. DEHNR. Complete details are found in Appendix E which is a copy of the Federal Register, Volume 42, Number 160, dated 18 August 1977, the Federal Register, Volume 48, No. 191, 30 September 1983.

Sample point locations and velocity measurements were made by Methods 1 and 2. Gas composition was determined by Fyrite and Method 3 on continuous bag samples. Method 5 was used for the particulate determination.

APPENDICES

pace. laboratories, inc

APPENDIX A

SUMMARY OF RESULTS

pace. laboratories, inc.

Appendix A

Summary of Method 5 Particulate Results

Indusmin Incorporated Spruce Pine N.C. Dust Collector Stack #B289

Run Number		1	2	3
Date		1/ 4/90	1/ 4/90	1/ 4/90
DN	Sample nozzle dia., in.	0.252	0.253	0.250
TT	Net time of test	60	60	60
PB	Barometric pressure, in. Hg.	26.92	26.92	26.92
PM	Average orifice pressure drop, in. H2O	2.380	2.516	2.406
VM	Volume of dry gas sampled, cu. ft. at meter conditions	48.74	51.37	50.49
TM	Average gas meter temp. in degrees F.	70.10	75.71	73.44
VMSTD	Volume of dry gas sampled at standard conditions*, SCF	43.945	45.849	45.242
VW	Total water collected in impingers + silica gel, ML.	16.4	22.6	17.8
VMV	Volume of water vapor at standard conditions*, SCF	0.772	1.064	0.838
PMV	Percent moisture by volume	1.727	2.269	1.819
MD	Mole fraction dry gas	0.9827	0.9773	0.9818
PCO2	Percent CO2 by volume, dry	0.00	0.00	0.00
PO2	Percent O2 by volume, dry	20.90	20.90	20.90
PCO	Percent CO by volume, dry	0.00	0.00	0.00
PN2	Percent N2 by volume, dry	79.10	79.10	79.10
MWD	Molecular weight-dry stack gas	28.836	28.836	28.836
MW	Molecular weight-stack gas	28.649	28.590	28.639
CP	Pitot tube coefficient	0.84	0.84	0.84
DPS	Average velocity head of stack gas, inches water	0.6937	0.7156	0.7009
TS	Average stack temperature, F	43.25	48.04	41.96

pace. laboratories, inc.

PSI	Static pressure of stack gas, inches Hg.	-0.023	-0.023	-0.026
PS	Stack pressure, absolute	26.897	26.897	26.897
VS	Average stack velocity, FPM	2415.5	2506.0	2437.7
AS	Stack area, inches sqrd.	779.3	779.3	779.3
QS	Stack flow rate, dry, standard conditions, DSCFM	12161.4	12429.0	12292.9
QSW	Stack flow rate, wet, standard conditions, WSCFM	12375.2	12717.5	12520.7
QA	Actual stack flow rate, ACFM	13126.0	13617.6	13246.3
PERI	Percent isokinetic	94.45	95.66	97.74
FMF	Particulate, Mg., front	5.60	3.84	3.33
CAN	Particulate, GR/DSCF front	0.0020	0.0013	0.0011
CAM	Particulate, GR/WSCF front	0.0020	0.0013	0.0012
CAT	Particulate, GR/ACF front	0.0018	0.0012	0.0011
CAW	Particulate, LB/HR front	0.205	0.137	0.119
FNP	Net sampling points	24	24	24

- Should be 551.5 ID = 26.5" NOT = 31.5"

*68 Degrees F. 29.92 Inches Hg.

pace. laboratories, inc.

Method 5 Particulate Calculations Test Number 1

Indusmin Incorporated Spruce Pine N.C. Dust Collector Stack #B289

Volume of Dry Gas Sampled at Standard Conditions

$$VMSTD = \frac{17.64 * VM * (PB + PM / 13.6)}{TM + 460} = 43.945$$

Volume of Water Vapor at Standard Conditions

$$VMV = 0.04709 * VW = 0.772$$

Percent Moisture in Stack Gas

$$PMV = \frac{100 * VMV}{VMSTD + VMV} = 1.727$$

Mole Fraction of Dry Gas

$$MD = \frac{100 - PMV}{100} = 0.9827$$

Average Molecular Weight of Dry Stack Gas

$$MWD = 0.44 * PCO2 + 0.32 * PO2 + 0.28 * (PN2+PCO) = 28.836$$

Molecular Weight of Stack Gas

$$MW = MWD * MD + 18 * (1-MD) = 28.649$$

Stack Gas Velocity at Stack Conditions

$$VS = 5129.4 * CP * DPS * SQRT(TS + 460)/(PS * MW) = 2415.5$$

Stack Gas Volumetric Flow at Standard Conditions, Dry

$$QS = \frac{0.123 * VS * AS * PS * MD}{TS + 460} = 12161.4$$

Stack Gas Volumetric Flow at Stack Conditions

$$QA = \frac{QS * (TS + 460)}{17.64 * PS * MD} = 13126.0$$

Percent Isokinetic

$$PERI = \frac{1039 * (TS + 460) * VMSTD}{VS * TT * PS * MD * DN * DN} = 94.45$$

pace. laboratories, inc

Particulate Loading -- Probe, Cyclone, Filter
(At Standard Conditions)
CAN = 0.0154 * FMF / VMSTD = 0.0020

Particulate Loading -- Probe, Cyclone, Filter
(At Stack Conditions)

$$CAT = \frac{17.64 * CAN * PS * MD}{TS + 460} = 0.0018$$

Particulate Lb/Hr -- Probe, Cyclone, Filter
(At Standard Conditions)
CAW = 0.00857 * CAN * QS = 0.205

pace. laboratories, inc.

APPENDIX B

FIELD DATA

pace laboratories, inc

TRAVERSE POINT LOCATION FOR CIRCULAR DUCTS

Plant Indusmin Inc. Spruce Pine NC

Date 1-4-90

Sampling location Collector Exhaust Stack

Inside of far wall to outside of nipple (I) 31.5"

Inside of near wall to outside of nipple (nipple length) (I) 5"

Stack I.D. (I-I) 26.5"

Nearest upstream disturbance 10.49 dd

Nearest downstream disturbance 3.17 dd

Calculated by JAB

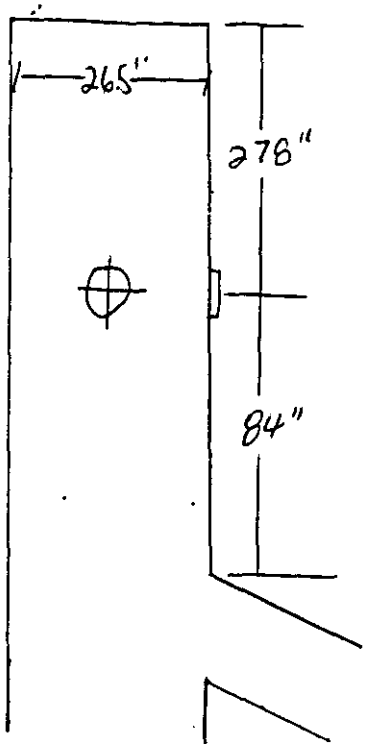

SCHEMATIC OF SAMPLING LOCATION

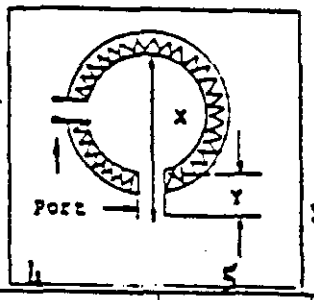

1	2	3	4	5	
TRAVERSE POINT NUMBER	FRACTION OF STACK I D	STACK I D	PRODUCT OF COLUMNS 2 AND 3 (TO NEAREST 1/8 INCH)	NIPPLE LENGTH	TRAVERSE POINT LOCATION FROM OUTSIDE OF NIPPLE (SUM OF COLUMNS 4 & 5)
1	0.021	26.5	0.556	5"	5.556
2	0.057		1.510		6.510
3	0.118		3.127		8.127
4	0.177		4.690		9.690
5	0.250		6.625		11.625
6	0.356		9.434		14.434
7	0.644		17.066		22.066
8	0.750		19.875		24.875
9	0.823		21.809		26.809
10	0.882		23.373		28.373
11	0.933		24.724		29.724
12	0.979	↓	25.943	↓	30.943

METHOD 2 GAS VELOCITY AND CYCLONIC FLOW DETERMINATION

Plant and City Industrial Inc. Spruce Pine NC. Run Date 1/4/90

Sampling Location Collector Exhaust STACK #B 289 Clock Time 0853

Run Number 1 Operator JAB/RBM Amb. Temp., °F 38°

Bar. Press., in. Hg 26.92 Static Press., in. H_2O -0.32

Stack Press., in. Hg 26.897 Static Press., in. Hg -0.023

Stack Dimension, in. - Diam. or side 1 31.5" side 2 —

Pitot Tube (C_p) 0.84 Pitot Tube Leak Check <0.1 @ 4.7 in. H_2O

Field data

Traverse point number	Position, in.	Velocity head (Δp_s), in. H_2O A	B	Stack temp., °F A	B	Cyclonic flow determination: Δp_s at 0° reference A	B	Angle (α) which yields a null Δp A	B
1	8.556	0.05	0.90	39	40	-0.04	0.03	8	5
2	6.510	0.60	0.89	39	40	-0.06	0.04	9	6
3	8.127	0.02	0.70	39	40	-0.06	0.04	10	4
4	9.694	0.56	0.56	40	40	-0.05	0.01	7	0
5	11.625	0.54	0.52	40	41	-0.05	0.01	6	0
6	14.434	0.48	0.37	40	40	-0.02	0.04	0	7
7	22.066	0.37	0.26	40	40	-0.01	0.03	2	7
8	24.875	0.39	0.24	40	40	0.03	0.03	8	3
9	26.889	0.48	0.21	41	40	0.03	0.02	9	4
10	28.373	0.54	0.27	40	40	0.04	0.02	12	6
11	29.724	0.55	0.27	40	40	0.03	0.02	10	9
12	30.443	0.54	0.24	40	41	0.04	0.03	9	7
							Average angle (α)[a]	5.958	

[a] Average of (α) must be < 10 degrees to be acceptable.

NOMAGRAPH DATA

$\Delta H_@$ 1.81 T_m 75 %M 2% P_s/P_m 0.999 C 1.08 D_b 42

$\overline{\Delta p}$ 0.49 T_s 40 DN_c 0.235 DN_a 0.252 0.253 0.250 Ref. Δp 0.39 W_b 41/1

pace. laboratories, inc.

METHOD 5 PARTICULATE FIELD DATA

Plant Industrial Incorporated Spruce Pine NC
Run No. 1
Location collector Exhaust STACK
Date 1/14/90
Operator JAB/ RBM
Sample Box No. 1
Meter Box No. 1348
Filter No. 85
Probe No. 1
Pitot Tube Cp 0.84

Very Important — Fill In All Blanks
Leak Checks: Beg. @ 15" 0.006
End @ 9.0" 0.003
Pitot Tube: Pretest @ 4.7 "H₂O
Postest @ 3.7 "H₂O
Static Pressure: -6.32 "H₂O
Start: 0.945
Finish: 0.948
Observer — Agency —

Bar. Press. "Hg 26.92
Meter Box ΔH@ 1.84 Y = 1.00
Assumed Tm, °F 25
Dry Bulb, °F 42
Wet Bulb, °F 41
Db - Wb, °F 1
Assumed Moisture % 2%
Ps/Pm 0.999
C Factor 1.09

Ambient Temp., °F 42
Heater Box Setting, °F 250
Probe Tip Dia., in. 0.252
Probe Length 8' GLASS 1.00
Probe Heater Setting 8.58
Average Δp 0.49 Δp 0.31
Average ΔH 2.32 ΔH Rel
Process Weight NA
Steam Load NA
Steam Pressure NA

Point	Clock Time	Dry Gas Meter, Cu. Ft.	Pitot Manometer (Δp) in H_2O	Orifice Manometer (ΔH) in H_2O Desired	Orifice Manometer (ΔH) in H_2O Actual	Dry Gas Temp. °F Inlet	Dry Gas Temp. °F Outlet	Pump Vacuum in Hg Gauge	Box Temp. °F	Impinger Temp. °F	Stack Temp °F	% CO_2	% O_2
A1	0	073.95	0.44	2.10	2.10	48	47	4.0	250	42	40		
2	2½	076.02	0.54	2.58	2.58	49	48	4.6	255	42	39		
3	5	077.88	0.64	3.00	3.00	52	48	5.2	255	39	40		
4	7½	080.34	0.67	3.25	3.25	53	49	5.4	256	39	40		
5	10	082.43	0.59	2.80	2.80	72	50	5.1	257	37	41		
6	12½	084.65	0.44	2.10	2.10	78	52	4.2	260	41	42		
7	15	086.67	0.37	1.78	1.78	79	52	4.0	260	41	40		
8	17½	088.81	0.37	1.78	1.78	81	54	4.0	261	41	40		
9	20	90.30	0.50	2.39	2.39	84	56	4.3	265	42	41		
10	22½	92.26	0.52	2.46	2.46	86	57	4.5	265	43	42		
11	25	94.30	0.48	2.32	2.32	88	58	4.5	265	43	41		
12	27½	96.43	0.52	2.46	2.46	89	58	4.5	265	42	42		
B1	30	98.36	0.87	4.10	4.10	86	60	8.7	270	45	42		
2	2½	101.05	0.88	4.20	4.20	89	60	9.0	270	44	43		
3	5	103.73	0.82	3.80	3.80	96	62	8.2	265	44	41		
4	7½	106.33	0.69	3.30	3.30	95	62	6.5	265	43	42		
5	10	108.81	0.59	2.80	2.80	99	63	5.1	265	45	42		
6	12½	111.06	0.48	2.32	2.32	98	63	4.5	260	46	45		
7	15	113.15	0.32	1.55	1.55	97	62	4.0	258	46	48		
8	17½	114.95	0.28	1.35	1.35	97	61	3.0	255	46	49		
9	20	116.58	0.26	1.24	1.24	94	64	2.6	255	45	49		
10	22½	118.15	0.24	1.15	1.15	92	64	2.3	250	46	49		
11	25	119.65	0.24	1.15	1.15	90	64	2.6	250	46	50		
12	27½	121.15	0.24	1.15	1.15	90	64	2.6	251	46	50		
	30	122.69											

AC 7-4

pace. laboratories, inc.

METHOD 5 PARTICULATE FIELD DATA

Plant INDUSIMIN INC. SPRUCE PINE NC
Run No. 2
Location COLLECTOR EXHAUST STACK
Date 1/4/90
Operator TAB/RBM
Sample Box No. 2
Meter Box No. 1340
Filter No. 86
Probe No. 2
Pitot Tube Cp 0.84

Very Important — Fill In All Blanks
Leak Checks: Beg. @ 15" 0.004
End @ 9.0" 0.002
Pitot Tube: Pre test @ 4.6 "H_2O
Post test @ 3.7 "H_2O
Static Pressure: 0.32 "H_2O
Start: 1055
Finish: 11:57
Observer –
Agency –

Bar. Press. "Hg 26.92
Meter Box ΔH@ 1.81 Y = 1.00
Assumed Tm, °F 75
Dry Bulb, °F 42
Wet Bulb, °F 41
Db - Wb, °F 1
Assumed Moisture % 2%
Ps/Pm 0.999
C Factor 1.08

Ambient Temp., °F 42
Heater Box Setting, °F 250
Probe Tip Dia., in. 0.253
Probe Length 4' Glass lined
Probe Heater Setting 858
Average Δp 0.49 Δp 0.31
Average ΔH 2.32 ΔH Rel
Process Weight N/A
Steam Load N/A
Steam Pressure N/A

Point	Clock Time	Dry Gas Meter, Cu. Ft.	Pitot Manometer (Δp) In H_2O	Orifice Manometer (ΔH) In H_2O Desired	Orifice Manometer (ΔH) In H_2O Actual	Dry Gas Temp. °F Inlet	Dry Gas Temp. °F Outlet	Pump Vacuum In Hg Gauge	Box Temp. °F	Impinger Temp °F	Stack Temp °F	% CO_2	% O_2
A1	0	123.00	0.58	2.75	2.75	82	69	4.2	250	42	36		
2	2½	125.17	0.68	3.27	3.27	86	67	4.5	250	42	39		
3	5	127.53	0.68	3.27	3.27	87	66	4.5	245	40	52		
4	7½	128.97	0.64	3.00	3.00	88	61	4.3	235	39	51		
5	10	132.51	0.64	3.00	3.00	87	62	4.3	245	40	53		
6	12½	134.62	0.62	2.82	2.82	87	67	4.0	240	41	53		
7	15	136.83	0.38	1.80	1.80	87	62	3.0	240	41	52		
8	17½	138.78	0.39	1.86	1.86	87	62	3.2	240	42	55		
9	20	140.67	0.44	2.10	2.10	89	62	3.4	240	42	54		
10	22½	142.70	0.50	2.39	2.39	89	62	4.2	240	44	50		
11	25	144.73	0.53	2.50	2.50	89	63	4.8	240	43	52		
12	27½	146.71	0.48	2.32	2.32	89	63	4.4	245	46	50		
B1	30/0	148.93	0.88	4.20	4.20	91	64	8.0	245	47	51		
2	2½	151.71	0.88	4.20	4.20	92	64	9.6	245	44	53		
3	5	154.50	0.82	3.80	3.80	92	64	8.4	245	44	49		
4	7½	156.99	0.71	3.40	3.40	93	64	6.2	250	45	50		
5	10	159.72	0.65	3.07	3.07	93	64	5.4	250	46	50		
6	12½	162.16	0.55	2.60	2.60	92	63	4.6	250	47	45		
7	15	164.42	0.34	1.62	1.62	91	60	4.0	245	46	43		
8	17½	166.40	0.29	1.40	1.40	90	60	3.4	245	47	42		
9	20	168.29	0.26	1.24	1.24	89	60	3.2	245	46	41		
10	22½	169.65	0.26	1.24	1.24	87	60	3.2	245	46	45		
11	25	171.23	0.27	1.30	1.30	86	60	3.0	245	46	43		
12	27½	172.4	0.26	1.24	1.24	87	60	3.0	246	47	44		
	30	174.37											

5.77

pace. laboratories, inc.

METHOD 5 PARTICULATE FIELD DATA

Plant INDUSMIN INC. Spruce Pine NC
Run No. 3
Location Collector Oxeust STACK
Date 1/4/90
Operator TAB RBM
Sample Box No. 3
Meter Box No. 1348
Filter No. 97
Probe No. 3
Pilot Tube Cp 0.84

Very Important — Fill In All Blanks
Leak Checks: Beg. @ 15" 0.004
End @ 7.0" 0.002
Pilot Tube? Pretest @ 4.2 "H₂O
Posttest @ 4.2 "H₂O
Static Pressure: 0.32 "H₂O
Start: 12 05
Finish: 13 08
Observer _____ Agency -

Bar. Press. "Hg 26.92
Meter Box ΔH@ 1.81 Y = 1.00
Assumed Tm, °F 75
Dry Bulb, °F 42
Wet Bulb, °F 41
Db - Wb, °F 1
Assumed Moisture % 2%
Ps/Pm 0.999
C Factor 1.06

Ambient Temp., °F 46
Heater Box Setting, °F 250
Probe Tip Dia., In. 0.250
Probe Length 4' Glass Liner
Probe Heater Setting 85%
Average Δp 0.49 Δp 0.31
Average ΔH 2.32 ΔH Ref
Process Weight NA
Steam Load NA
Steam Pressure NA

Point	Clock Time	Dry Gas Meter, Cu. Ft.	Pitot Manometer (Δp) in H_2O	Orifice Manometer (ΔH) in H_2O Desired	Orifice Manometer (ΔH) in H_2O Actual	Dry Gas Temp. °F Inlet	Dry Gas Temp. °F Outlet	Pump Vacuum in Hg Gauge	Box Temp. °F	Impinger Temp. °F	Stack Temp °F	% CO_2	% O_2
A1	0	174.60	0.58	2.75	2.75	80	62	6.1	259	40	44		
2	2½	177.00	0.65	3.10	3.10	82	62	7.0	250	39	42		
3	5	178.99	0.64	3.00	3.00	83	63	7.0	254	37	43		
4	7½	181.32	0.67	3.25	3.25	84	64	7.0	255	38	41		
5	10	183.82	0.64	3.00	3.00	85	64	7.0	255	38	41		
6	12½	186.28	0.58	2.76	2.76	85	64	6.7	251	40	39		
7	15	188.63	0.37	1.78	1.78	85	64	4.0	255	41	40		
8	17½	190.02	0.38	1.80	1.80	86	63	4.0	260	41	40		
9	20	192.47	0.44	2.10	2.10	86	63	4.2	260	41	39		
10	22½	194.39	0.51	2.40	2.40	84	62	4.3	260	42	39		
11	25	196.46	0.52	2.46	2.46	86	63	4.3	265	43	40		
12	27½	198.60	0.52	2.46	2.46	88	62	4.3	264	42	44		
B1	30/0	200.71	0.86	4.06	4.06	84	62	8.0	265	43	42		
2	2½	203.38	0.79	3.60	3.60	85	63	7.8	260	44	42		
3	5	205.72	0.76	3.50	3.50	86	64	7.8	260	46	43		
4	7½	208.21	0.70	3.25	3.25	86	64	6.5	265	46	42		
5	10	210.01	0.62	2.82	2.82	87	64	6.0	264	44	44		
6	12½	213.35	0.53	2.50	2.50	84	62	6.0	263	45	45		
7	15	215.69	0.35	1.65	1.65	82	61	5.6	259	45	44		
8	17½	217.60	0.23	1.10	1.10	83	61	4.0	258	46	43		
9	20	219.16	0.24	1.15	1.15	84	62	4.0	256	47	43		
10	22½	220.67	0.24	1.15	1.15	83	61	4.0	255	48	42		
11	25	222.20	0.24	1.15	1.15	82	60	4.0	255	46	43		
12	27½	223.18	0.20	0.95	0.95	81	61	2.0	254	47	42		
	30	225.09											

5.0.49

pace. laboratories, inc

METHOD 3 - ORSAT AND DRY MOLECULAR WEIGHT DETERMINATION

Plant Indusim Inc Spruce Pine N.C. Sample Location Collector Exhaust STACK

Sample Type - Continuous ✓ Pump Leakfree @ 10" ? ✓

Oxygen Check 20.9% ± 0.1% ✓ Fuel Type NA

Orsat Leak Check @ 4 min.: Pipet Levels - Leakfree ? ✓

Buret 14.9 - 14.9 = <0.2 ml ? ✓

Run No. 1 Sample Date 1/4/90 Ambient Temp. °F 43

Sampling Time (24 - hr clock) 0945-1045 Analysis By JAB

Gas \ Run	1 Actual	1 Net	2 Actual	2 Net	3 Actual	3 Net	Avg. %	Mult.	Molecular Wt. Dry lb/lb mole
CO_2	0.0	0.0	0.0	0.0	0.0	0.0	0.00	.44	0.000
O_2	20.9	20.9	20.9	20.9	20.9	20.9	20.90	.32	6.688
CO	20.9	0.0	20.9	0.0	20.9	0.0	0.0	.28	0.000
N_2	100	79.1	100	79.1	100	79.1	79.1	.28	22.148
								Total	28.836

$$F_o = \frac{20.9 - \%O_2}{\%CO_2} = NA$$

Run No. 2 Sample Date 1/4/90 Ambient Temp. °F 46

Sampling Time (24 - hr clock) 1055-1157 Analysis By JAB

Gas \ Run	1 Actual	1 Net	2 Actual	2 Net	3 Actual	3 Net	Avg. %	Mult.	Molecular Wt. Dry lb/lb mole
CO_2	0.0	0.0	0.0	0.0	0.0	0.0	0.0	.44	0.000
O_2	20.9	20.9	20.9	20.9	20.9	20.9	20.90	.32	6.688
CO	20.9	0.0	20.9	0.0	20.9	0.0	0.0	.28	0.000
N_2	100	79.1	100	79.1	100	79.1	79.1	.28	22.148
								Total	28.836

$$F_o = \frac{20.9 - \%O_2}{\%CO_2} = NA$$

Run No. 3 Sample Date 1/4/90 Ambient Temp. °F 47

Sampling Time (24 - hr clock) 1205-1308 Analysis By JAB

Gas \ Run	1 Actual	1 Net	2 Actual	2 Net	3 Actual	3 Net	Avg. %	Mult.	Molecular Wt. Dry lb/lb mole
CO_2	0.0	0.0	0.0	0.0	0.0	0.0	0.0	.44	0.000
O_2	20.9	20.9	20.9	20.9	20.9	20.9	20.9	.32	6.688
CO	20.9	0.0	20.9	0.0	20.9	0.0	0.0	.28	0.000
N_2	100	79.1	100	79.1	100	79.1	79.1	.28	22.148
								Total	28.836

Fuel type	F_o range
Coal:	
Anthracite and lignite	1.016-1.130
Bituminous	1.083-1.230
Wood	1.000-1.120
Wood bark	1.003-1.130

$$F_o = \frac{20.9 - \%O_2}{\%CO_2} \quad NA$$

pace. laboratories, inc

METHOD 5 SAMPLE RECOVERY AND INTEGRITY SHEET

Plant Indevsmin Inc Spruce Pine NC Recovered By JAB / RBM
Sample Location Collector Exhaust stack Recovery Date 01/04/90
#B 289

Run Number	1	2	3
Sample Date	1/4/90	1/4/90	1/4/90
Sample Box Number	1	2	3
Probe Number	1	2	3
Filter Number	85	86	87

MOISTURE RECOVERY

Impingers Cont. Number	2-1	2-2	2-3
Description of Water	clear	clear	clear
Liquid Level Marked	✓	✓	✓
Final Volume (wt.), ml	204	209	205
Initial Volume (wt.), ml	200	200	200
Net Volume (wt.), ml (g)	4.0	9.0	5.0
Silica Gel Cont. Number	2-1	2-2	2-3
Silica Gel % Spent	25%	28%	25%
Final Weight, g	212.4	213.6	212.8
Initial Weight, g	200	200	200
Net Weight, g	12.4	13.6	12.8
Total Moisture, g	16.4	22.6	17.8

PARTICULATE RECOVERY

Filter Cont. Number	2-1	2-2	2-3
Particulate Description	None Visible	None Visible	None Visible
Filter Cont. Sealed	✓	✓	✓
Final Weight, mg	503.47	507.26	501.79
Final Weight Audit, mg	503.46	507.30	501.82
Initial Weight, mg	501.97	505.61	501.50
Initial Weight Audit, mg	501.96	505.68	501.46
Filter Catch, mg	1.50	1.64	0.33
Probe Rinse Cont. Number	2-1	2-2	2-3
Liquid Level Marked	✓	✓	✓
Final Weight, mg	98,076.2	104,710.9	100,123.5
Final Weight Audit, mg	98,076.1	104,710.5	100,123.5
Initial Weight, mg	98,072.3	104,708.6	100,120.6
Initial Weight Audit, mg	98,071.8	104,708.3	100,120.3
Less Acetone Blank, mg	-0-	-0-	-0-
Acetone Rinse Catch, mg	4.1	2.2	3.0
Total Particulate, mg	5.60	3.84	3.33

Acetone Blank Number	A
Final Weight, mg	104,198.9
Final Weight Audit, mg	104,198.7
Initial Weight, mg	104,198.8
Initial Weight Audit, mg	104,198.7
Acetone Residue, mg	-0-
Acetone Volume, ml	150
Concentration, mg/mg	$< .8 \times 10^{-6}$

LABORATORY CUSTODY

Received By: RBM / JAB
Date Received: 1/4/90
Stored & Locked: ✓
Remarks: NONE

pace laboratories, inc.

APPENDIX C

PROCESS DATA

pace.
laboratories, inc

APPENDIX D

TEST PARTICIPANTS

Richard B. McCain, III	Air Sampling Manager Environmental Testing, Inc.
J. Anthony Blanton	Biologist Environmental Testing, Inc..

pace laboratories, inc.

APPENDIX E

SAMPLING AND ANALYTICAL PROCEDURES

federal register

THURSDAY, AUGUST 18, 1977
PART II

ENVIRONMENTAL PROTECTION AGENCY

■

STANDARDS OF PERFORMANCE FOR NEW STATIONARY SOURCES

Revision to Reference Method 1-8

have peroxide impurities that will cause erroneously high sulfuric acid mist measurements, a test for peroxides in isopropanol has been included in the method.

4. The gravimetric technique for moisture content (rather than volumetric) has been specified because a mixture of isopropyl alcohol and water will have a volume less than the sum of the volumes of its content.

5. A closer correspondence has been made between similar parts of Methods 8 and 5.

MISCELLANEOUS

Several commenters questioned the meaning of the term "subject to the approval of the Administrator" in relation to using alternate test methods and procedures. As defined in § 60.2 of subpart A, the "Administrator" includes any authorized representative of the Administrator of the Environmental Protection Agency. Authorized representatives are EPA officials in EPA Regional Offices or State, local, and regional governmental officials who have been delegated the responsibility of enforcing regulations under 40 CFR 60. These officials in consultation with other staff members familiar with technical aspects of source testing will render decisions regarding acceptable alternate test procedures.

In accordance with section 117 of the Act publication of these methods was preceded by consultation with appropriate advisory committees, independent experts, and Federal departments and agencies.

(Secs. 111, 114 and 301(a) of the Clean Air Act, sec. 4(a) of Pub. L. No. 91-604, 84 Stat. 1683; sec. 4(a) of Pub. L. No. 91-604, 84 Stat. 1687; sec. 2 of Pub. L. No. 90-148, 81 Stat. 504 [42 U.S.C. 1857c-6, 1857c-9, 1857g(a)])

NOTE—The Environmental Protection Agency has determined that this document does not contain a major proposal requiring preparation of an Economic Impact Analysis under Executive Orders 11821 and 11949 and OMB Circular A-107.

Dated: August 10, 1977.

DOUGLAS M. COSTLE,
Administrator.

Part 60 of Chapter I of Title 40 of the Code of Federal Regulations is amended by revising Methods 1 through 8 of Appendix A—Reference Methods as follows:

APPENDIX A—REFERENCE METHODS

The reference methods in this appendix are referred to in § 60.8 (Performance Tests) and § 60.11 (Compliance With Standards and Maintenance Requirements) of 40 CFR Part 60, Subpart A (General Provisions). Specific uses of these reference methods are described in the standards of performance contained in the subparts, beginning with Subpart D.

Within each standard of performance, a section titled "Test Methods and Procedures" is provided to (1) identify the test methods applicable to the facility subject to the respective standard and (2) identify any special instructions or conditions to be followed when applying a method to the respective facility. Such instructions (for example, establish sampling rates, volumes, or temperatures) are to be used either in addition to, or as a substitute for procedures in a reference method. Similarly, for sources subject to emission monitoring requirements, specific instructions pertaining to any use of a reference method are provided in the subpart or in Appendix B.

Inclusion of methods in this appendix is not intended as an endorsement or denial of their applicability to sources that are not subject to standards of performance. The methods are potentially applicable to other sources; however, applicability should be confirmed by careful and appropriate evaluation of the conditions prevalent at such sources.

The approach followed in the formulation of the reference methods involves specifications for equipment, procedures, and performance. In concept, a performance specification approach would be preferable in all methods because this allows the greatest flexibility to the user. In practice, however, this approach is impractical in most cases because performance specifications cannot be established. Most of the methods described herein, therefore involve specific equipment specifications and procedures, and only a few methods in this appendix rely on performance criteria.

Minor changes in the reference methods should not necessarily affect the validity of the results and it is recognized that alternative and equivalent methods exist. Section 60.8 provides authority for the Administrator to specify or approve (1) equivalent methods, (2) alternative methods, and (3) minor changes in the methodology of the reference methods. It should be clearly understood that unless otherwise identified all such methods and changes must have prior approval of the Administrator. An owner employing such methods or deviations from the reference methods without obtaining prior approval does so at the risk of subsequent disapproval and retesting with approved methods.

Within the reference methods, certain specific equipment or procedures are recognized as being acceptable or potentially acceptable and are specifically identified in the methods. The items identified as acceptable options may be used without approval but must be identified in the test report. The potentially approvable options are cited as "subject to the approval of the Administrator" or as "or equivalent." Such potentially approvable techniques or alternatives may be used at the discretion of the owner without prior approval. However, detailed descriptions for applying these potentially approvable techniques or alternatives are not provided in the reference methods. Also, the potentially approvable options are not necessarily acceptable in all applications. Therefore, an owner electing to use such potentially approvable techniques or alternatives is responsible for: (1) assuring that the techniques or alternatives are in fact applicable and are properly executed; (2) including a written description of the alternative method in the test report (the written method must be clear and must be capable of being performed without additional instruction, and the degree of detail should be similar to the detail contained in the reference methods); and (3) providing any rationale or supporting data necessary to show the validity of the alternative in the particular application. Failure to meet these requirements can result in the Administrator's disapproval of the alternative.

METHOD 1—SAMPLE AND VELOCITY TRAVERSES FOR STATIONARY SOURCES

1. *Principle and Applicability*

1.1 Principle. To aid in the representative measurement of pollutant emissions and/or total volumetric flow rate from a stationary source, a measurement site where the effluent stream is flowing in a known direction is selected, and the cross-section of the stack is divided into a number of equal areas. A traverse point is then located within each of these equal areas.

1.2 Applicability. This method is applicable to flowing gas streams in ducts, stacks, and flues. The method cannot be used when: (1) flow is cyclonic or swirling (see Section 2.4), (2) a stack is smaller than about 0.30 meter (12 in.) in diameter, or 0.071 m^2 (113 in^2) in cross-sectional area, or (3) the measurement site is less than two stack or duct diameters downstream or less than a half diameter upstream from a flow disturbance.

The requirements of this method must be considered before construction of a new facility from which emissions will be measured; failure to do so may require subsequent alterations to the stack or deviation from the standard procedure. Cases involving variants are subject to approval by the Administrator, U.S. Environmental Protection Agency.

2. *Procedure*

2.1 Selection of Measurement Site. Sampling or velocity measurement is performed at a site located at least eight stack or duct diameters downstream and two diameters upstream from any flow disturbance such as a bend, expansion, or contraction in the stack, or from a visible flame. If necessary, an alternative location may be selected, at a position at least two stack or duct diameters downstream and a half diameter upstream from any flow disturbance. For a rectangular cross section, an equivalent diameter (D_e) shall be calculated from the following equation, to determine the upstream and downstream distances:

$$D_e = \frac{2LW}{L+W}$$

Dated: September 22, 1983.

William D. Ruckelshaus,

Administrator.

PART 60—[AMENDED]

Appendix A of 40 CFR Part 60 is amended by revising Method 1 as follows:

1. By revising Figure 1-1 and Figure 1-2 as shown:

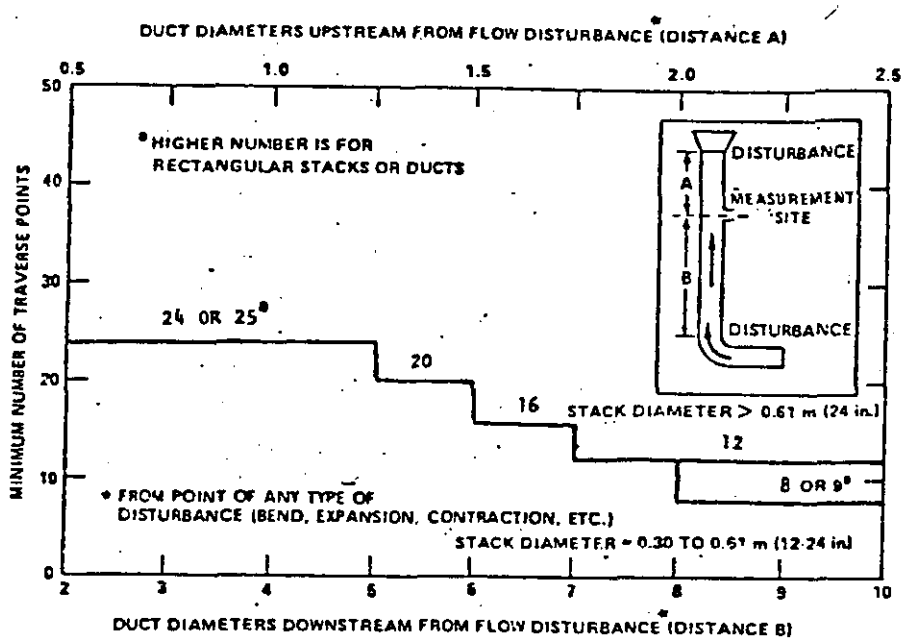

Figure 1-1. Minimum number of traverse points for particulate traverses.

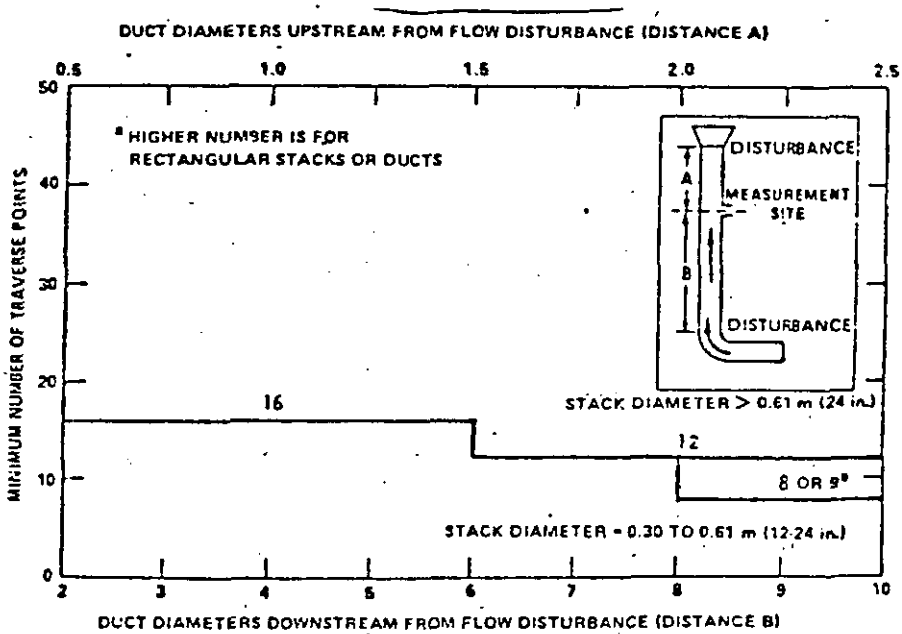

Figure 1-2. Minimum number of traverse points for velocity (nonparticulate) traverses.

2. By adding Citations 7 through 12 to Section 3 (Bibliography) as follows:

Appendix A—Reference Methods

* * * * *

Method 1. Sample and Velocity Traverses for Stationary Sources

* * * * *

3. * * *

7. Hanson, H.A., R.J. Davini, J.K. Morgan, and A.A. Iversen. Particulate Sampling Strategies for Large Power Plants Including Nonuniform Flow. U.S. Environmental Protection Agency. Research Triangle Park, N.C. Publication No. EPA-600/2-76-170. June 1976. 350 p.

8. Brooks, E.F., and R.L. Williams. Flow and Gas Sampling Manual. U.S. Environmental Protection Agency. Research Triangle Park, N.C. Publication No. EPA-600/2-76-203. July 1976. 93 p.

9. Entropy Environmentalists, Inc. Traverse Point Study. EPA Contract No. 68-02-3172. June 1977. 19 p.

10. Brown, J. and K. Yu. Test Report: Particulate Sampling Strategy in Circular Ducts. Emission Measurement Branch, Emission Standards and Engineering Division, U.S. Environmental Protection Agency, Research Triangle Park, N.C. 27711. July 31, 1980. 12 p.

11. Hawksley, P.G.W., S. Badzioch, and J.H. Blackett. Measurement of Solids in Flue Gases. Leatherhead, England. The British Coal Utilisation Research Association, 1961. p. 129-133.

12. Knapp, K.T. The Number of Sampling Points Needed for Representative Source Sampling. In: Proceedings of the Fourth National Conference on Energy and the Environment, Theodore, L., et al. (ed.). Dayton, Dayton Section of the American Institute of Chemical Engineers. October 3-7, 1976. p. 563-568.

(Secs. 111, 114, and 301(a) of the Clean Air Act, as amended (42 U.S.C. 7411, 7414, and 7601(a)))

[FR Doc. 83-26377 Filed 9-29-83; 8:45 am]

BILLING CODE 6560-50-M

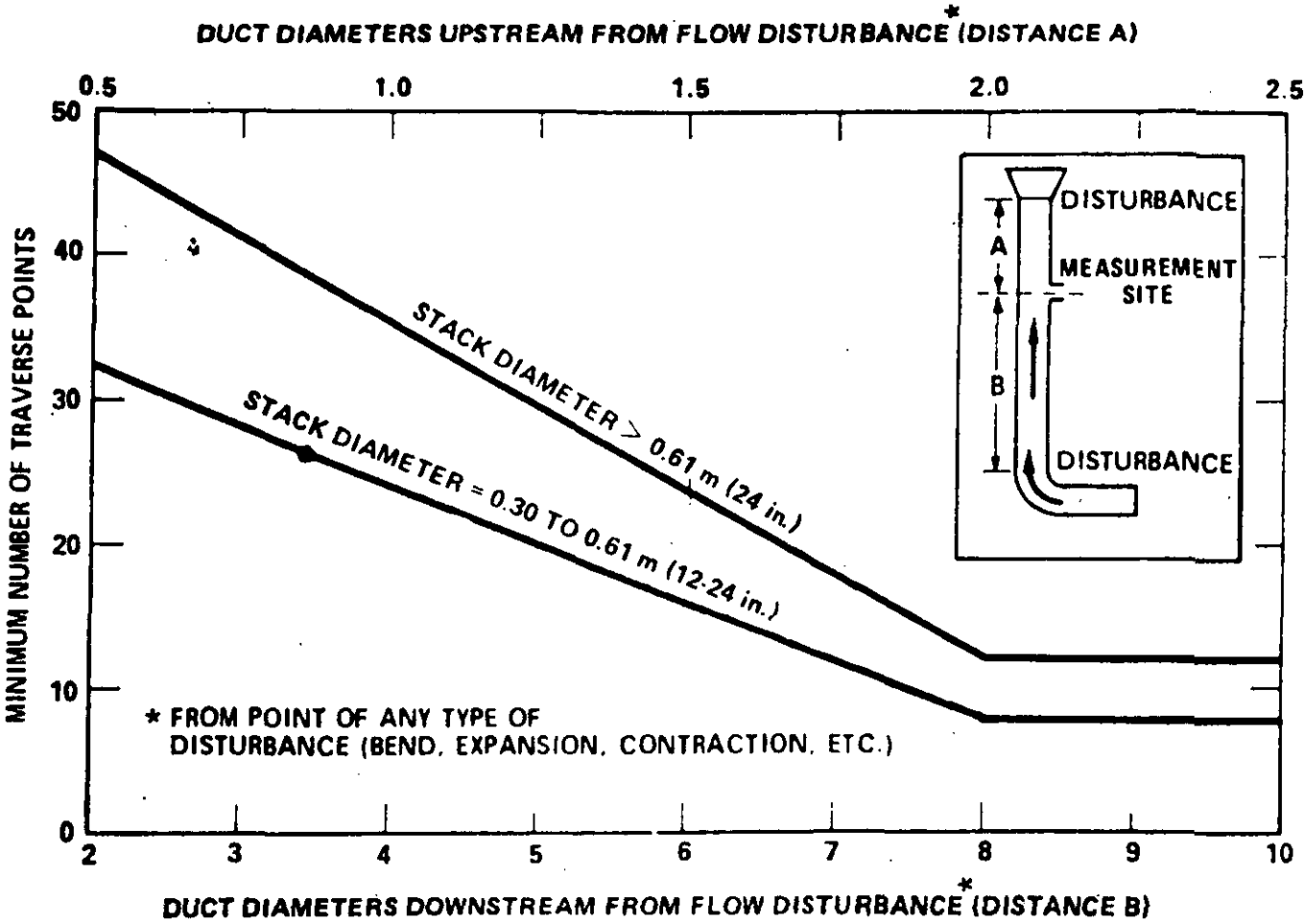

Figure 1-1. Minimum number of traverse points for particulate traverses.

where L=length and W=width.

2.2 Determining the Number of Traverse Points.

2.2.1 Particulate Traverses. When the eight- and two-diameter criterion can be met, the minimum number of traverse points shall be: (1) twelve, for circular or rectangular stacks with diameters (or equivalent diameters) greater than 0.61 meter (24 in.); (2) eight, for circular stacks with diameters between 0.30 and 0.61 meter (12-24 in.); (3) nine, for rectangular stacks with equivalent diameters between 0.30 and 0.61 meter (12-24 in.).

When the eight- and two-diameter criterion cannot be met, the minimum number of traverse points is determined from Figure 1-1. Before referring to the figure, however, determine the distances from the chosen measurement site to the nearest upstream and downstream disturbances, and divide each distance by the stack diameter or equivalent diameter, to determine the distance in terms of the number of duct diameters. Then, determine from Figure 1-1 the minimum number of traverse points that corresponds: (1) to the number of duct diameters upstream; and (2) to the number of diameters downstream. Select the higher of the two minimum numbers of traverse points, or a greater value, so that for circular stacks the number is a multiple of 4, and for rectangular stacks, the number is one of those shown in Table 1-1.

TABLE 1-1. *Cross-sectional layout for rectangular stacks*

Number of traverse points	*Matrix layout*
9	3x3
12	4x3
16	4x4
20	5x4
25	5x5
30	6x5
36	6x6
42	7x6
49	7x7

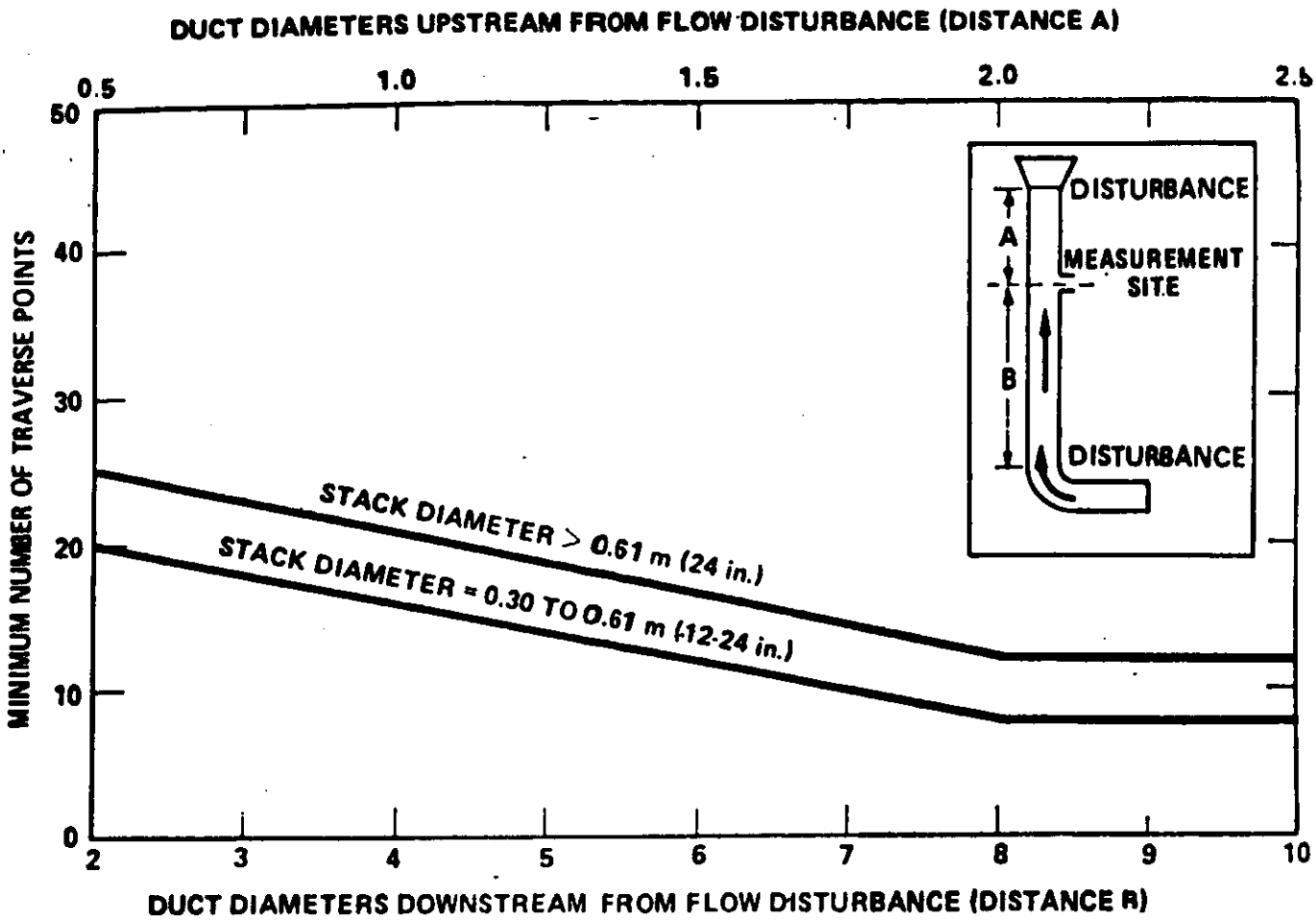

Figure 1-2. Minimum number of traverse points for velocity (nonparticulate) traverses.

2.2.2 Velocity (Non-Particulate) Traverses. When velocity or volumetric flow rate is to be determined (but not particulate matter), the same procedure as that for particulate traverses (Section 2.2.1) is followed, except that Figure 1-2 may be used instead of Figure 1-1.

2.3 Cross-Sectional Layout and Location of Traverse Points.

2.3.1 Circular Stacks. Locate the traverse points on two perpendicular diameters according to Table 1-2 and the example shown in Figure 1-3. Any equation (for examples, see Citations 2 and 3 in the Bibliography) that gives the same values as those in Table 1-2 may be used in lieu of Table 1-2.

For particulate traverses, one of the diameters must be in a plane containing the greatest expected concentration variation, e.g., after bends, one diameter shall be in the plane of the bend. This requirement becomes less critical as the distance from the disturbance increases; therefore, other diameter locations may be used, subject to approval of the Administrator.

In addition, for stacks having diameters greater than 0.61 m (24 in.) no traverse points shall be located within 2.5 centimeters (1.00 in.) of the stack walls; and for stack diameters equal to or less than 0.61 m (24 in.), no traverse points shall be located within 1.3 cm (0.50 in.) of the stack walls. To meet these criteria, observe the procedures given below.

2.3.1.1 Stacks With Diameters Greater Than 0.61 m (24 in.). When any of the traverse points as located in Section 2.3.1 fall within 2.5 cm (1.00 in.) of the stack walls, relocate them away from the stack walls to: (1) a distance of 2.5 cm (1.00 in.); or (2) a distance equal to the nozzle inside diameter, whichever is larger. These relocated traverse points (on each end of a diameter) shall be the "adjusted" traverse points.

Whenever two successive traverse points are combined to form a single adjusted traverse point, treat the adjusted point as two separate traverse points, both in the sampling (or velocity measurement) procedure, and in recording the data.

TRAVERSE POINT	DISTANCE, % of diameter
1	4.4
2	14.7
3	29.5
4	70.5
5	85.3
6	95.6

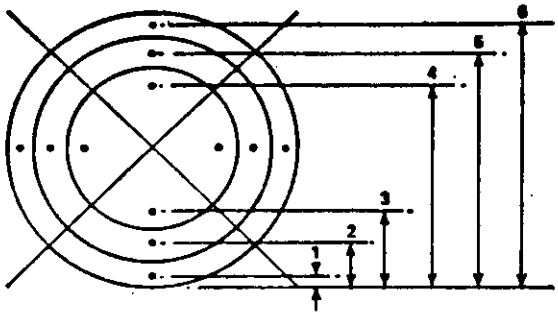

Figure 1-3. Example showing circular stack cross section divided into 12 equal areas, with location of traverse points indicated.

Table 1-2. LOCATION OF TRAVERSE POINTS IN CIRCULAR STACKS

(Percent of stack diameter from inside wall to traverse point)

Traverse point number on a diameter	Number of traverse points on a diameter											
	2	4	6	8	10	12	14	16	18	20	22	24
1	14.6	6.7	4.4	3.2	2.6	2.1	1.8	1.6	1.4	1.3	1.1	1.1
2	85.4	25.0	14.6	10.5	8.2	6.7	5.7	4.9	4.4	3.9	3.5	3.2
3		75.0	29.6	19.4	14.6	11.8	9.9	8.5	7.5	6.7	6.0	5.5
4		93.3	70.4	32.3	22.6	17.7	14.6	12.5	10.9	9.7	8.7	7.9
5			85.4	67.7	34.2	25.0	20.1	16.9	14.6	12.9	11.6	10.5
6			95.6	80.6	65.8	35.6	26.9	22.0	18.8	16.5	14.6	13.2
7				89.5	77.4	64.4	36.6	28.3	23.6	20.4	18.0	16.1
8				96.8	85.4	75.0	63.4	37.5	29.6	25.0	21.8	19.4
9					91.8	82.3	73.1	62.5	38.2	30.6	26.2	23.0
10					97.4	88.2	79.9	71.7	61.8	38.8	31.5	27.2
11						93.3	85.4	78.0	70.4	61.2	39.3	32.3
12						97.9	90.1	83.1	76.4	69.4	60.7	39.8
13							94.3	87.5	81.2	75.0	68.5	60.2
14							98.2	91.5	85.4	79.6	73.8	67.7
15								95.1	89.1	83.5	78.2	72.8
16								98.4	92.5	87.1	82.0	77.0
17									95.6	90.3	85.4	80.6
18									98.6	93.3	88.4	83.9
19										96.1	91.3	86.8
20										98.7	94.0	89.5
21											96.5	92.1
22											98.9	94.5
23												96.8
24												98.9

2.3.1.2 Stacks With Diameters Equal to or Less Than 0.61 m (24 in.). Follow the procedure in Section 2.3.1.1, noting only that any "adjusted" points should be relocated away from the stack walls to (1) a distance of 1.3 cm (0.50 in.), or (2) a distance equal to the nozzle inside diameter, whichever is larger.

2.3.2 Rectangular Stacks. Determine the number of traverse points as explained in Sections 2.1 and 2.2 of this method. From Table 1-1, determine the grid configuration. Divide the stack cross-section into as many equal rectangular elemental areas as traverse points, and then locate a traverse point at the centroid of each equal area according to the example in Figure 1-4.

The situation of traverse points being too close to the stack walls is not expected to arise with rectangular stacks. If this problem should ever arise, the Administrator must be contacted for resolution of the matter.

2.4 Verification of Absence of Cyclonic Flow. In most stationary sources, the direction of stack gas flow is essentially parallel to the stack walls. However, cyclonic flow may exist (1) after such devices as cyclones and inertial demisters following venturi scrubbers, or (2) in stacks having tangential inlets or other duct configurations which tend to induce swirling; in these instances, the presence or absence of cyclonic flow at the sampling location must be determined. The following techniques are acceptable for this determination.

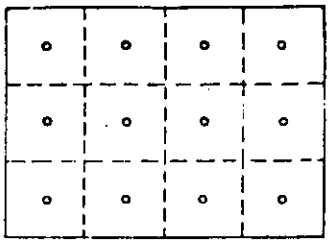

Figure 1-4. Example showing rectangular stack cross section divided into 12 equal areas, with a traverse point at centroid of each area.

Level and zero the manometer. Connect a Type S pitot tube to the manometer. Position the Type S pitot tube at each traverse point, in succession, so that the planes of the face openings of the pitot tube are perpendicular to the stack cross-sectional plane; when the Type S pitot tube is in this position, it is at "0° reference." Note the differential pressure (Δp) reading at each traverse point. If a null (zero) pitot reading is obtained at 0° reference at a given traverse point, an acceptable flow condition exists at that point. If the pitot reading is not zero at 0° reference, rotate the pitot tube (up to ±90° yaw angle), until a null reading is obtained. Carefully determine and record the value of the rotation angle (α) to the nearest degree. After the null technique has been applied at each traverse point, calculate the average of the absolute values of α, assign α values of 0° to those points for which no rotation was required, and include these in the overall average. If the average value of α is greater than 10°, the overall flow condition in the stack is unacceptable and alternative methodology, subject to the approval of the Administrator, must be used to perform accurate sampling and velocity traverses.

3. *Bibliography*

1. Determining Dust Concentration in a Gas Stream, ASME Performance Test Code No. 27. New York, 1957.

2. Devorkin, Howard, et al. Air Pollution Source Testing Manual. Air Pollution Control District, Los Angeles, CA, November 1963.

3. Methods for Determination of Velocity, Volume, Dust and Mist Content of Gases. Western Precipitation Division of Joy Manufacturing Co. Los Angeles, CA, Bulletin WP-50, 1968.

4. Standard Method for Sampling Stacks for Particulate Matter. In: 1971 Book of ASTM Standards, Part 23. ASTM Designation D-2928-71. Philadelphia, Pa. 1971.

5. Hanson, H. A., et al. Particulate Sampling Strategies for Large Power Plants Including Nonuniform Flow. USEPA, ORD, ESRL, Research Triangle Park, N.C. EPA-600/2-76-170. June 1976.

6. Entropy Environmentalists, Inc. Determination of the Optimum Number of Sampling Points: An Analysis of Method 1 Criteria. Environmental Protection Agency, Research Triangle Park, N.C. EPA Contract No. 68-01-3172, Task 7.

METHOD 2—DETERMINATION OF STACK GAS VELOCITY AND VOLUMETRIC FLOW RATE (TYPE S PITOT TUBE)

1. *Principle and Applicability*

1.1 Principle. The average gas velocity in a stack is determined from the gas density and from measurement of the average velocity head with a Type S (Stauscheibe or reverse-type) pitot tube.

1.2 Applicability. This method is applicable for measurement of the average velocity of a gas stream and for quantifying gas flow.

This procedure is not applicable at measurement sites which fail to meet the criteria of Method 1, Section 2.1. Also, the method cannot be used for direct measurement in cyclonic or swirling gas streams. Section 2.4 of Method 1 shows how to determine cyclonic or swirling flow conditions. When unacceptable conditions exist, alternative procedures, subject to the approval of the Administrator, U.S. Environmental Protection Agency, must be employed to make accurate flow rate determinations; examples of such alternative procedures are: (1) to install straightening vanes, (2) to calculate the total volumetric flow rate stoichiometrically, or (3) to move to another measurement site at which the flow is acceptable.

2. *Apparatus*

Specifications for the apparatus are given below. Any other apparatus that has been demonstrated (subject to approval of the Administrator) to be capable of meeting the specifications will be considered acceptable.

2.6 Determine the stack gas dry molecular weight. For combustion processes or processes that emit essentially CO_2, O_2, CO, and N_2, use Method 3. For processes emitting essentially air, an analysis need not be conducted; use a dry molecular weight of 29.0. For other processes, other methods, subject to the approval of the Administrator, must be used.

2.7 Obtain the moisture content from Reference Method 4 (or equivalent) or from Method 5.

2.8 Determine the cross-sectional area of the stack or duct at the sampling location. Whenever possible, physically measure the stack dimensions rather than using blueprints.

4. *Calibration*

4.1 Type S Pitot Tube. Before its initial use, carefully examine the Type S pitot tube in top, side, and end views to verify that the face openings of the tube are aligned within the specifications illustrated in Figure 2-2 or 2-6. The pitot tube shall not be used if it fails to meet these alignment specifications.

After verifying the face opening alignment, measure and record the following dimensions of the pitot tube: (a) the external tubing diameter (dimension D_t, Figure 2-2b); and (b) the base-to-opening plane distances (dimensions P_A and P_B, Figure 2-2b). If D_t is between 0.48 and 0.95 cm (3/16 and 3/8 in.) and if P_A and P_B are equal and between 1.05 and 1.50 D_t, there are two possible options: (1) the pitot tube may be calibrated according to the procedure outlined in Sections 4.1.2 through 4.1.5 below, or (2) a baseline (isolated tube) coefficient value of 0.84 may be assigned to the pitot tube. Note, however, that if the pitot tube is part of an assembly, calibration may still be required, despite knowledge of the baseline coefficient value (see Section 4.1.1).

If D_t, P_A, and P_B are outside the specified limits, the pitot tube must be calibrated as outlined in 4.1.2 through 4.1.5 below.

4.1.1 Type S Pitot Tube Assemblies. During sample and velocity traverses, the isolated Type S pitot tube is not always used; in many instances, the pitot tube is used in combination with other source-sampling components (thermocouple, sampling probe, nozzle) as part of an "assembly." The presence of other sampling components can sometimes affect the baseline value of the Type S pitot tube coefficient (Citation 9 in Section 6); therefore an assigned (or otherwise known) baseline coefficient value may or may not be valid for a given assembly. The baseline and assembly coefficient values will be identical only when the relative placement of the components in the assembly is such that aerodynamic interference effects are eliminated. Figures 2-6 through 2-8 illustrate interference-free component arrangements for Type S pitot tubes having external tubing diameters between 0.48 and 0.95 cm (3/16 and 3/8 in.). Type S pitot tube assemblies that fail to meet any or all of the specifications of Figures 2-6 through 2-8 shall be calibrated according to the procedure outlined in Sections 4.1.2 through 4.1.5 below, and prior to calibration, the values of the interconnent spacings (pitot-nozzle, pitot-thermocouple, pitot-probe sheath) shall be measured and recorded.

NOTE.—Do not use any Type S pitot tube assembly which is constructed such that the impact pressure opening plane of the pitot tube is below the entry plane of the nozzle (see Figure 2-6b).

4.1.2 Calibration Setup. If the Type S pitot tube is to be calibrated, one leg of the tube shall be permanently marked A, and the other, B. Calibration shall be done in a flow system having the following essential design features:

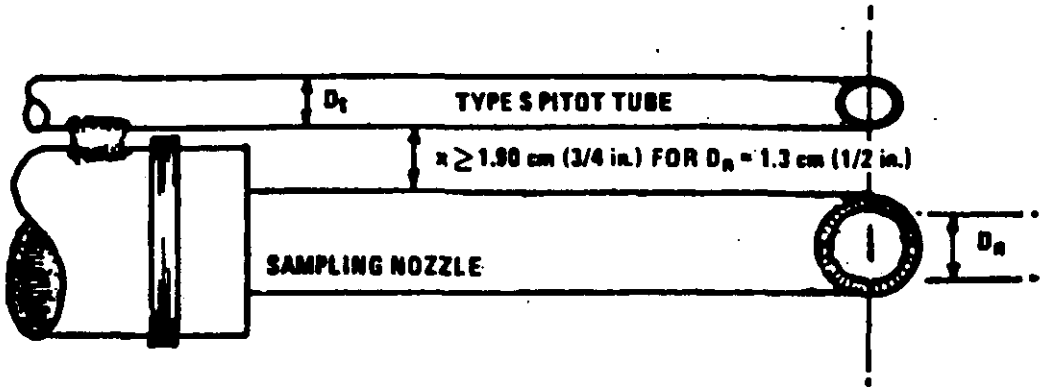

A. BOTTOM VIEW; SHOWING MINIMUM PITOT-NOZZLE SEPARATION.

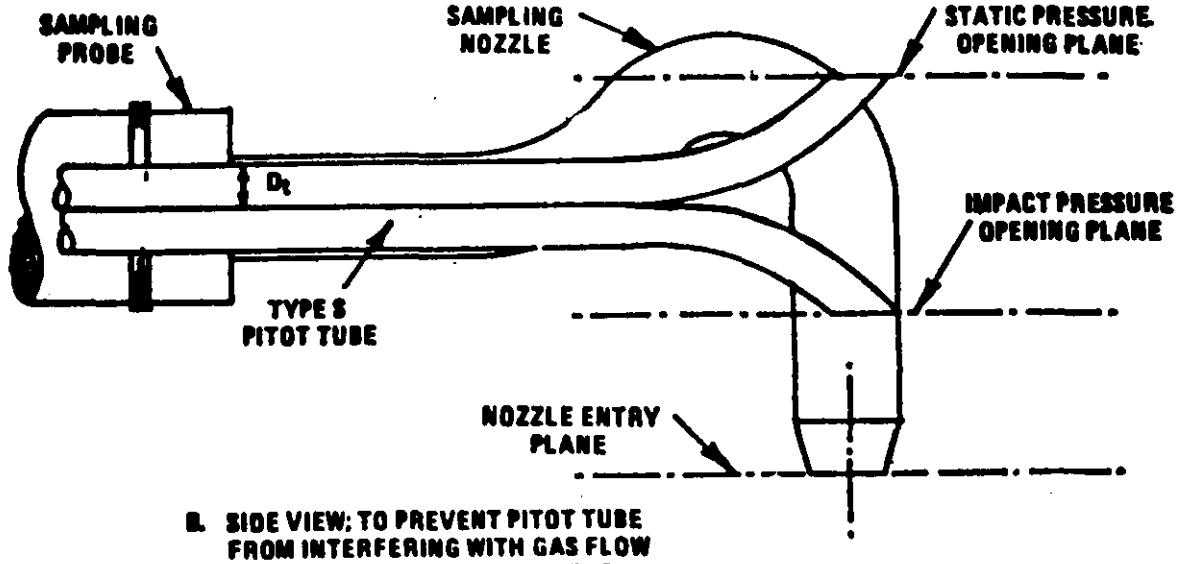

B. SIDE VIEW; TO PREVENT PITOT TUBE FROM INTERFERING WITH GAS FLOW STREAMLINES APPROACHING THE NOZZLE, THE IMPACT PRESSURE OPENING PLANE OF THE PITOT TUBE SHALL BE EVEN WITH OR ABOVE THE NOZZLE ENTRY PLANE.

Figure 2-6. Proper pitot tube - sampling nozzle configuration to prevent aerodynamic interference; buttonhook - type nozzle; centers of nozzle and pitot opening aligned; D_t between 0.48 and 0.95 cm (3/16 and 3/8 in.).

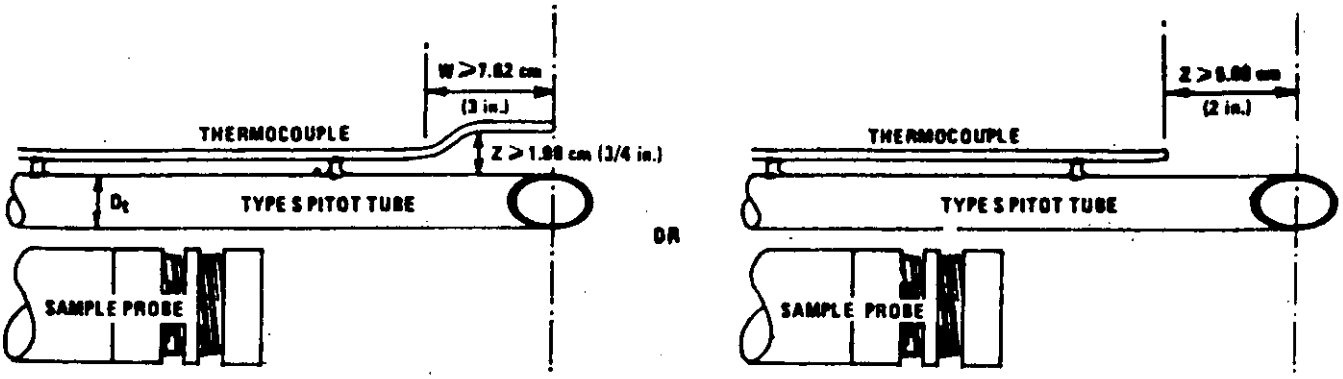

Figure 2-7. Proper thermocouple placement to prevent interference; D_t between 0.48 and 0.95 cm (3/16 and 3/8 in.).

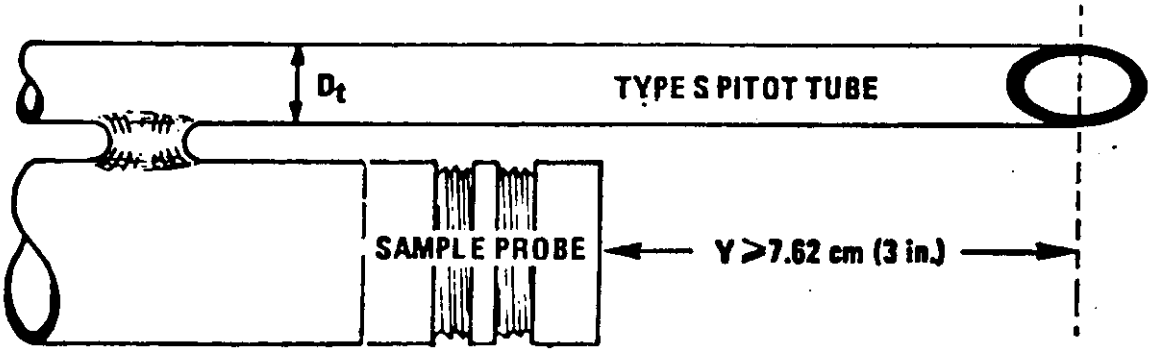

Figure 2-8. Minimum pitot-sample probe separation needed to prevent interference; D_t between 0.48 and 0.95 cm (3/16 and 3/8 in.).

4.1.2.1 The flowing gas stream must be confined to a duct of definite cross-sectional area, either circular or rectangular. For circular cross-sections, the minimum duct diameter shall be 30.5 cm (12 in.); for rectangular cross-sections, the width (shorter side) shall be at least 25.4 cm (10 in.).

4.1.2.2 The cross-sectional area of the calibration duct must be constant over a distance of 10 or more duct diameters. For a rectangular cross-section, use an equivalent diameter, calculated from the following equation, to determine the number of duct diameters:

$$D_e = \frac{2LW}{(L+W)}$$

Equation 2-1

where:
D_e = Equivalent diameter
L = Length
W = Width

To ensure the presence of stable, fully developed flow patterns at the calibration site, or "test section," the site must be located at least eight diameters downstream and two diameters upstream from the nearest disturbances.

NOTE.—The eight- and two-diameter criteria are not absolute; other test section locations may be used (subject to approval of the Administrator), provided that the flow at the test site is stable and demonstrably parallel to the duct axis.

4.1.2.3 The flow system shall have the capacity to generate a test-section velocity around 915 m/min (3,000 ft/min). This velocity must be constant with time to guarantee steady flow during calibration. Note that Type S pitot tube coefficients obtained by single-velocity calibration at 915 m/min (3,000 ft/min) will generally be valid to within ±3 percent for the measurement of velocities above 305 m/min (1,000 ft/min) and to within ±5 to 6 percent for the measurement of velocities between 180 and 305 m/min (600 and 1,000 ft/min). If a more precise correlation between C_p and velocity is desired, the flow system shall have the capacity to generate at least four distinct, time-invariant test-section velocities covering the velocity range from 180 to 1,525 m/min (600 to 5,000 ft/min), and calibration data shall be taken at regular velocity intervals over this range (see Citations 9 and 14 in Section 6 for details).

4.1.2.4 Two entry ports, one each for the standard and Type S pitot tubes, shall be cut in the test section; the standard pitot entry port shall be located slightly downstream of the Type S port, so that the standard and Type S impact openings will lie in the same cross-sectional plane during calibration. To facilitate alignment of the pitot tubes during calibration, it is advisable that the test section be constructed of plexiglas or some other transparent material.

4.1.3 Calibration Procedure. Note that this procedure is a general one and must not be used without first referring to the special considerations presented in Section 4.1.5. Note also that this procedure applies only to single-velocity calibration. To obtain calibration data for the A and B sides of the Type S pitot tube, proceed as follows:

4.1.3.1 Make sure that the manometer is properly filled and that the oil is free from contamination and is of the proper density. Inspect and leak-check all pitot lines; repair or replace if necessary.

4.1.3.2 Level and zero the manometer. Turn on the fan and allow the flow to stabilize. Seal the Type S entry port.

4.1.3.3 Ensure that the manometer is level and zeroed. Position the standard pitot tube at the calibration point (determined as outlined in Section 4.1.5.1), and align the tube so that its tip is pointed directly into the flow. Particular care should be taken in aligning the tube to avoid yaw and pitch angles. Make sure that the entry port surrounding the tube is properly sealed.

4.1.3.4 Read Δp_{std} and record its value in a data table similar to the one shown in Figure 2-9. Remove the standard pitot tube from the duct and disconnect it from the manometer. Seal the standard entry port.

4.1.3.5 Connect the Type S pitot tube to the manometer. Open the Type S entry port. Check the manometer level and zero. Insert and align the Type S pitot tube so that its A side impact opening is at the same point as was the standard pitot tube and is pointed directly into the flow. Make sure that the entry port surrounding the tube is properly sealed.

4.1.3.6 Read Δp_s and enter its value in the data table. Remove the Type S pitot tube from the duct and disconnect it from the manometer.

4.1.3.7 Repeat steps 4.1.3.3 through 4.1.3.6 above until three pairs of Δp readings have been obtained.

4.1.3.8 Repeat steps 4.1.3.3 through 4.1.3.7 above for the B side of the Type S pitot tube.

4.1.3.9 Perform calculations, as described in Section 4.1.4 below.

4.1.4 Calculations.

4.1.4.1 For each of the six pairs of Δp readings (i.e., three from side A and three from side B) obtained in Section 4.1.3 above, calculate the value of the Type S pitot tube coefficient as follows:

PITOT TUBE IDENTIFICATION NUMBER: _____ DATE: _____

CALIBRATED BY: _____

	"A" SIDE CALIBRATION			
RUN NO.	Δp_{std} cm H_2O (in. H_2O)	$\Delta p_{(s)}$ cm H_2O (in. H_2O)	$C_{p(s)}$	DEVIATION $C_{p(s)} - \bar{C}_p(A)$
1				
2				
3				
		$\bar{C}_p$ (SIDE A)		

	"B" SIDE CALIBRATION			
RUN NO.	Δp_{std} cm H_2O (in. H_2O)	$\Delta p_{(s)}$ cm H_2O (in. H_2O)	$C_{p(s)}$	DEVIATION $C_{p(s)} - \bar{C}_p(B)$
1				
2				
3				
		$\bar{C}_p$ (SIDE B)		

$$\text{AVERAGE DEVIATION} = \sigma\,(\text{A OR B}) = \frac{\sum_{1}^{3} \left| C_{p(s)} - \bar{C}_p(\text{A OR B}) \right|}{3} \longleftarrow \text{MUST BE} < 0.01$$

$$\left| \bar{C}_p\,(\text{SIDE A}) - \bar{C}_p\,(\text{SIDE B}) \right| \longleftarrow \text{MUST BE} < 0.01$$

Figure 2-9. Pitot tube calibration data.

$$C_{p(s)} = C_{p(std)} \sqrt{\frac{\Delta p_{std}}{\Delta p_s}}$$

Equation 2-2

where:

$C_{p(s)}$ = Type S pitot tube coefficient

$C_{p(std)}$ = Standard pitot tube coefficient; use 0.99 if the coefficient is unknown and the tube is designed according to the criteria of Sections 2.7.1 to 2.7.5 of this method.

Δp_{std} = Velocity head measured by the standard pitot tube, cm H_2O (in. H_2O)

Δp_s = Velocity head measured by the Type S pitot tube, cm H_2O (in. H_2O)

4.1.4.2 Calculate $\bar{C}_p$ (side A), the mean A-side coefficient, and $\bar{C}_p$ (side B), the mean B-side coefficient; calculate the difference between these two average values.

4.1.4.3 Calculate the deviation of each of the three A-side values of $C_{p(s)}$ from $\bar{C}_p$ (side A), and the deviation of each B-side value of $C_{p(s)}$ from $\bar{C}_p$ (side B). Use the following equation:

$$\text{Deviation} = C_{p(s)} - \bar{C}_p(\text{A or B})$$

Equation 2-3

4.1.4.4 Calculate σ, the average deviation from the mean, for both the A and B sides of the pitot tube. Use the following equation:

$$\sigma\,(\text{side A or B}) = \frac{\sum_{1}^{3} \left| C_{p(s)} - \bar{C}_p(A \text{ or } B) \right|}{3}$$

Equation 2-4

4.1.4.5 Use the Type S pitot tube only if the values of σ (side A) and σ (side B) are less than or equal to 0.01 and if the absolute value of the difference between $\bar{C}_p$ (A) and $\bar{C}_p$ (B) is 0.01 or less.

4.1.5 Special considerations.

4.1.5.1 Selection of calibration point.

4.1.5.1.1 When an isolated Type S pitot tube is calibrated, select a calibration point at or near the center of the duct, and follow the procedures outlined in Sections 4.1.3 and 4.1.4 above. The Type S pitot coefficients so obtained, i.e., $\bar{C}_p$ (side A) and $\bar{C}_p$ (side B), will be valid, so long as either: (1) the isolated pitot tube is used; or (2) the pitot tube is used with other components (nozzle, thermocouple, sample probe) in an arrangement that is free from aerodynamic interference effects (see Figures 2-6 through 2-8).

4.1.5.1.2 For Type S pitot tube-thermocouple combinations (without sample probe), select a calibration point at or near the center of the duct, and follow the procedures outlined in Sections 4.1.3 and 4.1.4 above. The coefficients so obtained will be valid so long as the pitot tube-thermocouple combination is used by itself or with other components in an interference-free arrangement (Figures 2-6 and 2-8).

4.1.5.1.3 For assemblies with sample probes, the calibration point should be located at or near the center of the duct; however, insertion of a probe sheath into a small duct may cause significant cross-sectional area blockage and yield incorrect coefficient values (Citation 9 in Section 6). Therefore, to minimize the blockage effect, the calibration point may be a few inches off-center if necessary. The actual blockage effect will be negligible when the theoretical blockage, as determined by a projected-area model of the probe sheath, is 2 percent or less of the duct cross-sectional area for assemblies without external sheaths (Figure 2-10a), and 3 percent or less for assemblies with external sheaths (Figure 2-10b).

4.1.5.2 For those probe assemblies in which pitot tube-nozzle interference is a factor (i.e., those in which the pitot-nozzel separation distance fails to meet the specification illustrated in Figure 2-6a), the value of $C_{p(s)}$ depends upon the amount of free-space between the tube and nozzle, and therefore is a function of nozzle size. In these instances, separate calibrations shall be performed with each of the commonly used nozzle sizes in place. Note that the single-velocity calibration technique is acceptable for this purpose, even though the larger nozzle sizes (>0.635 cm or ¼ in.) are not ordinarily used for isokinetic sampling at velocities around 915 m/min (3,000 ft/min), which is the calibration velocity; note also that it is not necessary to draw an isokinetic sample during calibration (see Citation 19 in Section 6).

4.1.5.3 For a probe assembly constructed such that its pitot tube is always used in the same orientation, only one side of the pitot tube need be calibrated (the side which will face the flow). The pitot tube must still meet the alignment specifications of Figure 2-2 or 2-3, however, and must have an average deviation (σ) value of 0.01 or less (see Section 4.1.4.4).

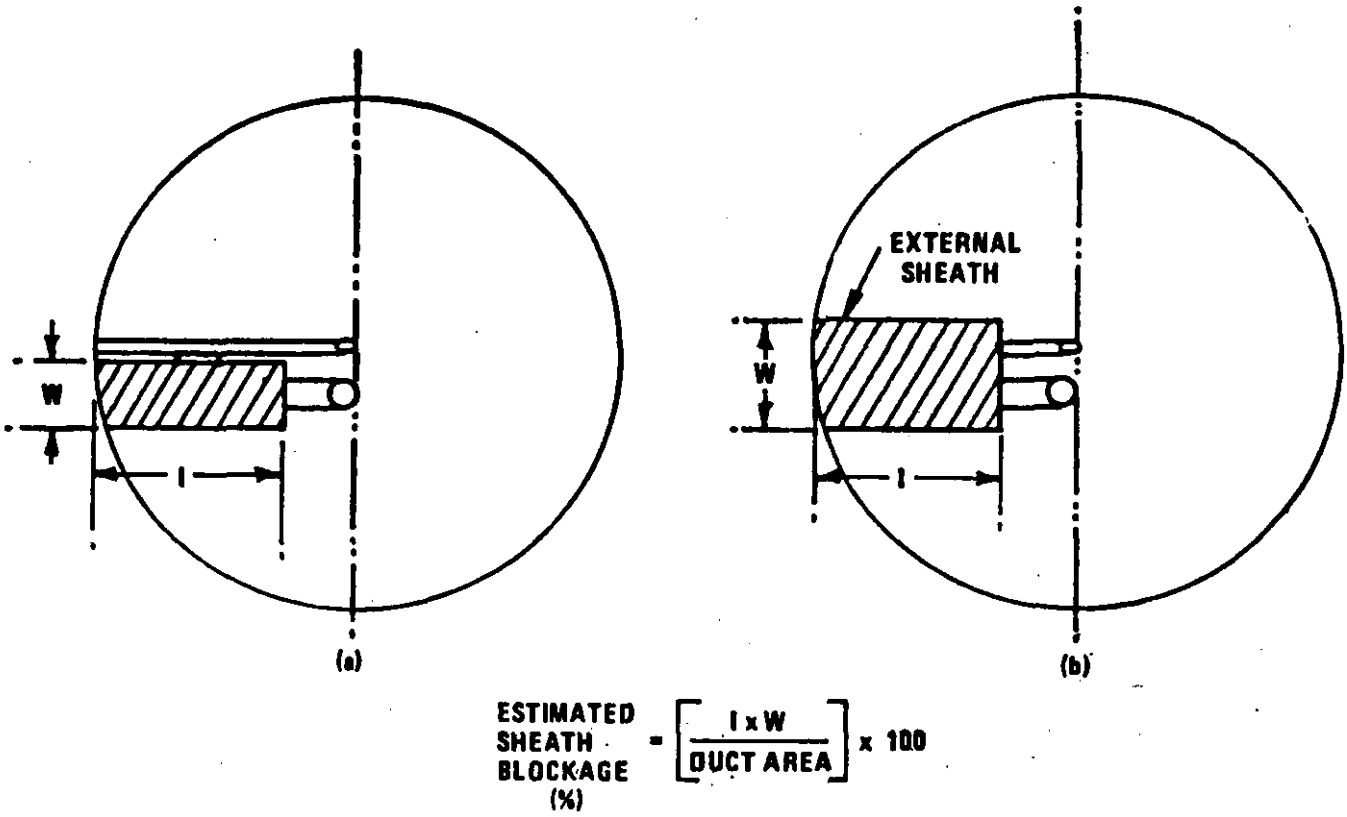

Figure 2-10. Projected-area models for typical pitot tube assemblies.

4.1.6 Field Use and Recalibration.

4.1.6.1 Field Use.

4.1.6.1.1 When a Type S pitot tube (isolated tube or assembly) is used in the field, the appropriate coefficient value (whether assigned or obtained by calibration) shall be used to perform velocity calculations. For calibrated Type S pitot tubes, the A side coefficient shall be used when the A side of the tube faces the flow, and the B side coefficient shall be used when the B side faces the flow; alternatively, the arithmetic average of the A and B side coefficient values may be used, irrespective of which side faces the flow.

4.1.6.1.2 When a probe assembly is used to sample a small duct (12 to 36 in. in diameter), the probe sheath sometimes blocks a significant part of the duct cross-section, causing a reduction in the effective value of $C_{p(s)}$. Consult Citation 9 in Section 6 for details. Conventional pitot-sampling probe assemblies are not recommended for use in ducts having inside diameters smaller than 12 inches (Citation 16 in Section 6).

4.1.6.2 Recalibration.

4.1.6.2.1 Isolated Pitot Tubes. After each field use, the pitot tube shall be carefully reexamined in top, side, and end views. If the pitot face openings are still aligned within the specifications illustrated in Figure 2-2 or 2-3, it can be assumed that the baseline coefficient of the pitot tube has not changed. If, however, the tube has been damaged to the extent that it no longer meets the specifications of Figure 2-2 or 2-3, the damage shall either be repaired to restore proper alignment of the face openings or the tube shall be discarded.

4.1.6.2.2 Pitot Tube Assemblies. After each field use, check the face opening alignment of the pitot tube, as in Section 4.1.6.2.1; also, remeasure the intercomponent spacings of the assembly. If the intercomponent spacings have not changed and the face opening alignment is acceptable, it can be assumed that the coefficient of the assembly has not changed. If the face opening alignment is no longer within the specifications of Figures 2-2 or 2-3, either repair the damage or replace the pitot tube (calibrating the new assembly, if necessary). If the intercomponent spacings have changed, restore the original spacings or recalibrate the assembly.

4.2 Standard pitot tube (if applicable). If a standard pitot tube is used for the velocity traverse, the tube shall be constructed according to the criteria of Section 2.7 and shall be assigned a baseline coefficient value of 0.99. If the standard pitot tube is used as part of an assembly, the tube shall be in an interference-free arrangement (subject to the approval of the Administrator).

4.3 Temperature Gauges. After each field use, calibrate dial thermometers, liquid-filled bulb thermometers, thermocouple-potentiometer systems, and other gauges at a temperature within 10 percent of the average absolute stack temperature. For temperatures up to 405° C (761° F), use an ASTM mercury-in-glass reference thermometer, or equivalent, as a reference; alternatively, either a reference thermocouple and potentiometer (calibrated by NBS) or thermometric fixed points, e.g., ice bath and boiling water (corrected for barometric pressure) may be used. For temperatures above 405° C (761° F), use an NBS-calibrated reference thermocouple-potentiometer system or an alternate reference, subject to the approval of the Administrator.

If, during calibration, the absolute temperatures measured with the gauge being calibrated and the reference gauge agree within 1.5 percent, the temperature data taken in the field shall be considered valid. Otherwise, the pollutant emission test shall either be considered invalid or adjustments (if appropriate) of the test results shall be made, subject to the approval of the Administrator.

4.4 Barometer. Calibrate the barometer used against a mercury barometer.

5. *Calculations*

Carry out calculations, retaining at least one extra decimal figure beyond that of the acquired data. Round off figures after final calculation.

5.1 Nomenclature.

A = Cross-sectional area of stack, m² (ft²).

B_{ws} = Water vapor in the gas stream (from Method 5 or Reference Method 4), proportion by volume.

C_p = Pitot tube coefficient, dimensionless.

K_p = Pitot tube constant,

$$34.97 \frac{\text{m}}{\text{sec}} \left[\frac{(g/g\text{-mole})(\text{mm Hg})}{(°\text{K})(\text{mm H}_2\text{O})}\right]^{1/2}$$

for the metric system and

$$85.49 \frac{\text{ft}}{\text{sec}} \left[\frac{(\text{lb/lb-mole})(\text{in. Hg})}{(°\text{R})(\text{in. H}_2\text{O})}\right]^{1/2}$$

for the English system.

M_d = Molecular weight of stack gas, dry basis (see Section 3.6) g/g-mole (lb/lb-mole).

M_s = Molecular weight of stack gas, wet basis, g/g-mole (lb/lb-mole).

$$= M_d(1-B_{ws}) + 18.0\,B_{ws} \qquad \text{Equation 2-5}$$

P_{bar} = Barometric pressure at measurement site, mm Hg (in. Hg).

P_g = Stack static pressure, mm Hg (in. Hg).

P_s = Absolute stack gas pressure, mm Hg (in. Hg).

$$= P_{bar} + P_g \qquad \text{Equation 2-6}$$

P_{std} = Standard absolute pressure, 760 mm Hg (29.92 in. Hg).

Q_{sd} = Dry volumetric stack gas flow rate corrected to standard conditions, dscm/hr (dscf/hr).

t_s = Stack temperature, °C (°F).

T_s = Absolute stack temperature, °K (°R).

$$= 273 + t_s \text{ for metric} \qquad \text{Equation 2-7}$$

$$= 460 + t_s \text{ for English} \qquad \text{Equation 2-8}$$

T_{std} = Standard absolute temperature, 293 °K (528° R)

v_s = Average stack gas velocity, m/sec (ft/sec).

Δp = Velocity head of stack gas, mm H_2O (in. H_2O).

3,600 = Conversion factor, sec/hr.

18.0 = Molecular weight of water, g/g-mole (lb-lb-mole).

5.2 Average stack gas velocity.

$$v_s = K_p C_p \left(\sqrt{\Delta p}\right)_{avg} \sqrt{\frac{T_{s(avg)}}{P_s M_s}} \qquad \text{Equation 2-9}$$

5.3 Average stack gas dry volumetric flow rate.

$$Q_{sd} = 3{,}600(1 - B_{ws}) v_s A \left(\frac{T_{std}}{T_{s(avg)}}\right)\left(\frac{P_s}{P_{std}}\right) \qquad \text{Equation 2-10}$$

6. *Bibliography*

1. Mark, L. S. Mechanical Engineers' Handbook. New York, McGraw-Hill Book Co., Inc. 1951.
2. Perry, J. H. Chemical Engineers' Handbook. New York. McGraw-Hill Book Co., Inc. 1960.

3. Shigehara, R. T., W. F. Todd, and W. S. Smith. Significance of Errors in Stack Sampling Measurements. U.S. Environmental Protection Agency, Research Triangle Park, N.C. (Presented at the Annual Meeting of the Air Pollution Control Association, St. Louis, Mo., June 14-19, 1970.)

4. Standard Method for Sampling Stacks for Particulate Matter. In: 1971 Book of ASTM Standards, Part 23. Philadelphia, Pa. 1971. ASTM Designation D-2928-71.

5. Vennard, J. K. Elementary Fluid Mechanics. New York. John Wiley and Sons, Inc. 1947.

6. Fluid Meters—Their Theory and Application. American Society of Mechanical Engineers, New York, N.Y. 1959.

7. ASHRAE Handbook of Fundamentals. 1972. p. 208.

8. Annual Book of ASTM Standards, Part 26. 1974. p. 648.

9. Vollaro, R. F. Guidelines for Type S Pitot Tube Calibration. U.S. Environmental Protection Agency, Research Triangle Park, N.C. (Presented at 1st Annual Meeting, Source Evaluation Society, Dayton, Ohio, September 18, 1975.)

10. Vollaro, R. F. A Type S Pitot Tube Calibration Study. U.S. Environmental Protection Agency, Emission Measurement Branch, Research Triangle Park, N.C. July 1974.

11. Vollaro, R. F. The Effects of Impact Opening Misalignment on the Value of the Type S Pitot Tube Coefficient. U.S. Environmental Protection Agency, Emission Measurement Branch, Research Triangle Park, N.C. October 1976.

12. Vollaro, R. F. Establishment of a Baseline Coefficient Value for Properly Constructed Type S Pitot Tubes. U.S. Environmental Protection Agency, Emission Measurement Branch, Research Triangle Park, N.C. November 1976.

13. Vollaro, R. F. An Evaluation of Single-Velocity Calibration Techniques as a Means of Determining Type S Pitot Tube Coefficients. U.S. Environmental Protection Agency, Emission Measurement Branch, Research Triangle Park, N.C. August 1975

14. Vollaro, R. F. The Use of Type S Pitot Tubes for the Measurement of Low Velocities. U.S. Environmental Protection Agency, Emission Measurement Branch, Research Triangle Park, N.C. November 1976.

15. Smith, Marvin L. Velocity Calibration of EPA Type Source Sampling Probe. United Technologies Corporation, Pratt and Whitney Aircraft Division, East Hartford, Conn. 1975.

16. Vollaro, R. F. Recommended Procedure for Sample Traverses in Ducts Smaller than 12 Inches in Diameter. U.S. Environmental Protection Agency, Emission Measurement Branch, Research Triangle Park, N.C. November 1976.

17. Ower, E. and R. C. Pankhurst. The Measurement of Air Flow, 4th Ed., London, Pergamon Press. 1966.

18. Vollaro, R. F. A survey of Commercially Available Instrumentation for the Measurement of Low-Range Gas Velocities. U.S. Environmental Protection Agency, Emission Measurement Branch, Research Triangle Park, N.C. November 1976. (Unpublished Paper)

19. Gnyp, A. W., C. C. St. Pierre, D. S. Smith, D. Mosson, and J. Steiner. An Experimental Investigation of the Effect of Pitot Tube-Sampling Probe Configurations on the Magnitude of the S Type Pitot Tube Coefficient for Commercially Available Source Sampling Probes. Prepared by the University of Windsor for the Ministry of the Environment, Toronto, Canada. February 1975.

METHOD 3—GAS ANALYSIS FOR CARBON DIOXIDE, OXYGEN, EXCESS AIR, AND DRY MOLECULAR WEIGHT

1. *Principle and Applicability*

1.1 Principle. A gas sample is extracted from a stack, by one of the following methods: (1) single-point, grab sampling; (2) single-point, integrated sampling; or (3) multi-point, integrated sampling. The gas sample is analyzed for percent carbon dioxide (CO_2), percent oxygen (O_2), and, if necessary, percent carbon monoxide (CO). If a dry molecular weight determination is to be made, either an Orsat or a Fyrite[1] analyzer may be used for the analysis; for excess air or emission rate correction factor determination, an Orsat analyzer must be used.

1.2 Applicability. This method is applicable for determining CO_2 and O_2 concentrations, excess air, and dry molecular weight of a sample from a gas stream of a fossil-fuel combustion process. The method may also be applicable to other processes where it has been determined that compounds other than CO_2, O_2, CO, and nitrogen (N_2) are not present in concentrations sufficient to affect the results.

Other methods, as well as modifications to the procedure described herein, are also applicable for some or all of the above determinations. Examples of specific methods and modifications include: (1) a multi-point sampling method using an Orsat analyzer to analyze individual grab samples obtained at each point; (2) a method using CO_2 or O_2 and stoichiometric calculations to determine dry molecular weight and excess air; (3) assigning a value of 30.0 for dry molecular weight, in lieu of actual measurements, for processes burning natural gas, coal, or oil. These methods and modifications may be used, but are subject to the approval of the Administrator.

2. *Apparatus*

As an alternative to the sampling apparatus and systems described herein, other sampling systems (e.g., liquid displacement) may be used provided such systems are capable of obtaining a representative sample and maintaining a constant sampling rate, and are otherwise capable of yielding acceptable results. Use of such systems is subject to the approval of the Administrator.

2.1 Grab Sampling (Figure 3-1).

2.1.1 Probe. The probe should be made of stainless steel or borosilicate glass tubing and should be equipped with an in-stack or out-stack filter to remove particulate matter (a plug of glass wool is satisfactory for this purpose). Any other material inert to O_2, CO_2, CO, and N_2 and resistant to temperature at sampling conditions may be used for the probe; examples of such material are aluminum, copper, quartz glass and Teflon.

2.1.2 Pump. A one-way squeeze bulb, or equivalent, is used to transport the gas sample to the analyzer.

2.2 Integrated Sampling (Figure 3-2).

2.2.1 Probe. A probe such as that described in Section 2.1.1 is suitable.

[1] Mention of trade names or specific products does not constitute endorsement by the Environmental Protection Agency.

2.2.2 Condenser. An air-cooled or water-cooled condenser, or other condenser that will not remove O_2, CO_2, CO, and N_2, may be used to remove excess moisture which would interfere with the operation of the pump and flow meter.

2.2.3 Valve. A needle valve is used to adjust sample gas flow rate.

2.2.4 Pump. A leak-free, diaphragm-type pump, or equivalent, is used to transport sample gas to the flexible bag. Install a small surge tank between the pump and rate meter to eliminate the pulsation effect of the diaphragm pump on the rotameter.

2.2.5 Rate Meter. The rotameter, or equivalent rate meter, used should be capable of measuring flow rate to within ±2 percent of the selected flow rate. A flow rate range of 500 to 1000 cm^3/min is suggested.

2.2.6 Flexible Bag. Any leak-free plastic (e.g., Tedlar, Mylar, Teflon) or plastic-coated aluminum (e.g., aluminized Mylar) bag, or equivalent, having a capacity consistent with the selected flow rate and time length of the test run, may be used. A capacity in the range of 55 to 90 liters is suggested.

To leak-check the bag, connect it to a water manometer and pressurize the bag to 5 to 10 cm H_2O (2 to 4 in. H_2O). Allow to stand for 10 minutes. Any displacement in the water manometer indicates a leak. An alternative leak-check method is to pressurize the bag to 5 to 10 cm H_2O (2 to 4 in. H_2O) and allow to stand overnight. A deflated bag indicates a leak.

2.2.7 Pressure Gauge. A water-filled U-tube manometer, or equivalent, of about 28 cm (12 in.) is used for the flexible bag leak-check.

2.2.8 Vacuum Gauge. A mercury manometer, or equivalent, of at least 760 mm Hg (30 in. Hg) is used for the sampling train leak-check.

2.3 Analysis. For Orsat and Fyrite analyzer maintenance and operation procedures, follow the instructions recommended by the manufacturer, unless otherwise specified herein.

2.3.1 Dry Molecular Weight Determination. An Orsat analyzer or Fyrite type combustion gas analyzer may be used.

2.3.2 Emission Rate Correction Factor or Excess Air Determination. An Orsat analyzer must be used. For low CO_2 (less than 4.0 percent) or high O_2 (greater than 15.0 percent) concentrations, the measuring burette of the Orsat must have at least 0.1 percent subdivisions.

3. *Dry Molecular Weight Determination*

Any of the three sampling and analytical procedures described below may be used for determining the dry molecular weight.

3.1 Single-Point, Grab Sampling and Analytical Procedure.

3.1.1 The sampling point in the duct shall either be at the centroid of the cross section or at a point no closer to the walls than 1.00 m (3.3 ft), unless otherwise specified by the Administrator.

3.1.2 Set up the equipment as shown in Figure 3-1, making sure all connections ahead of the analyzer are tight and leak-free. If an Orsat analyzer is used, it is recommended that the analyzer be leaked-checked by following the procedure in Section 5; however, the leak-check is optional.

3.1.3 Place the probe in the stack, with the tip of the probe positioned at the sampling point; purge the sampling line. Draw a sample into the analyzer and immediately analyze it for percent CO_2 and percent O_2. Determine the percentage of the gas that is N_2 and CO by subtracting the sum of the percent CO_2 and percent O_2 from 100 percent. Calculate the dry molecular weight as indicated in Section 6.3.

3.1.4 Repeat the sampling, analysis, and calculation procedures, until the dry molecular weights of any three grab samples differ from their mean by no more than 0.3 g/g-mole (0.3 lb/lb-mole). Average these three molecular weights, and report the results to the nearest 0.1 g/g-mole (lb/lb-mole).

3.2 Single-Point, Integrated Sampling and Analytical Procedure.

3.2.1 The sampling point in the duct shall be located as specified in Section 3.1.1.

3.2.2 Leak-check (optional) the flexible bag as in Section 2.2.6. Set up the equipment as shown in Figure 3-2. Just prior to sampling, leak-check (optional) the train by placing a vacuum gauge at the condenser inlet, pulling a vacuum of at least 250 mm Hg (10 in. Hg), plugging the outlet at the quick disconnect, and then turning off the pump. The vacuum should remain stable for at least 0.5 minute. Evacuate the flexible bag. Connect the probe and place it in the stack, with the tip of the probe positioned at the sampling point; purge the sampling line. Next, connect the bag and make sure that all connections are tight and leak free.

3.2.3 Sample at a constant rate. The sampling run should be simultaneous with, and for the same total length of time as, the pollutant emission rate determination. Collection of at least 30 liters (1.00 ft^3) of sample gas is recommended; however, smaller volumes may be collected, if desired.

3.2.4 Obtain one integrated flue gas sample during each pollutant emission rate determination. Within 8 hours after the sample is taken, analyze it for percent CO_2 and percent O_2 using either an Orsat analyzer or a Fyrite-type combustion gas analyzer. If an Orsat analyzer is used, it is recommended that the Orsat leak-check described in Section 5 be performed before this determination; however, the check is optional. Determine the percentage of the gas that is N_2 and CO by subtracting the sum of the percent CO and percent O_2 from 100 percent. Calculate the dry molecular weight as indicated in Section 6.3.

3.2.5 Repeat the analysis and calculation procedures until the individual dry molecular weights for any three analyses differ from their mean by no more than 0.3 g/g-mole (0.3 lb/lb-mole). Average these three molecular weights, and report the results to the nearest 0.1 g/g-mole (0.1 lb/lb-mole).

3.3 Multi-Point, Integrated Sampling and Analytical Procedure.

3.3.1 Unless otherwise specified by the Administrator, a minimum of eight traverse points shall be used for circular stacks having diameters less than 0.61 m (24 in.), a minimum of nine shall be used for rectangular stacks having equivalent diameters less than 0.61 m (24 in.), and a minimum of twelve traverse points shall be used for all other cases. The traverse points shall be located according to Method 1. The use of fewer points is subject to approval of the Administrator.

3.3.2 Follow the procedures outlined in Sections 3.2.2 through 3.2.5, except for the following: traverse all sampling points and sample at each point for an equal length of time. Record sampling data as shown in Figure 3-3.

4. *Emission Rate Correction Factor or Excess Air Determination*

NOTE.—A Fyrite-type combustion gas analyzer is not acceptable for excess air or emission rate correction factor determination, unless approved by the Administrator. If both percent CO_2 and percent O_2 are measured, the analytical results of any of the three procedures given below may also be used for calculating the dry molecular weight.

Each of the three procedures below shall be used only when specified in an applicable subpart of the standards. The use of these procedures for other purposes must have specific prior approval of the Administrator.

4.1 Single-Point, Grab Sampling and Analytical Procedure.

4.1.1 The sampling point in the duct shall either be at the centroid of the cross-section or at a point no closer to the walls than 1.00 m (3.3 ft), unless otherwise specified by the Administrator.

4.1.2 Set up the equipment as shown in Figure 3-1, making sure all connections ahead of the analyzer are tight and leak-free. Leak-check the Orsat analyzer according to the procedure described in Section 5. This leak-check is mandatory.

TIME	TRAVERSE PT.	Q 1pm	% DEV.[a]
	AVERAGE		

$$^{a}\% \text{ DEV} = \left(\frac{Q - Q\,avg}{Q\,avg}\right) 100 \qquad \text{(MUST BE} \leq 10\%)$$

Figure 3-3. Sampling rate data.

4.1.3 Place the probe in the stack, with the tip of the probe positioned at the sampling point; purge the sampling line. Draw a sample into the analyzer. For emission rate correction factor determination, immediately analyze the sample, as outlined in Sections 4.1.4 and 4.1.5, for percent CO_2 or percent O_2. If excess air is desired, proceed as follows: (1) immediately analyze the sample, as in Sections 4.1.4 and 4.1.5, for percent CO_2, O_2, and CO; (2) determine the percentage of the gas that is N_2 by subtracting the sum of the percent CO_2, percent O_2, and percent CO from 100 percent; and (3) calculate percent excess air as outlined in Section 6.2.

4.1.4 To ensure complete absorption of the CO_2, O_2, or if applicable, CO, make repeated passes through each absorbing solution until two consecutive readings are the same. Several passes (three or four) should be made between readings. (If constant readings cannot be obtained after three consecutive readings, replace the absorbing solution.)

4.1.5 After the analysis is completed, leak-check (mandatory) the Orsat analyzer once again, as described in Section 5. For the results of the analysis to be valid, the Orsat analyzer must pass this leak test before and after the analysis. NOTE.—Since this single-point, grab sampling and analytical procedure is normally conducted in conjunction with a single-point, grab sampling and analytical procedure for a pollutant, only one analysis is ordinarily conducted. Therefore, great care must be taken to obtain a valid sample and analysis. Although in most cases only CO_2 or O_2 is required, it is recommended that both CO_2 and O_2 be measured, and that Citation 5 in the Bibliography be used to validate the analytical data.

4.2 Single-Point, Integrated Sampling and Analytical Procedure.

4.2.1 The sampling point in the duct shall be located as specified in Section 4.1.1.

4.2.2 Leak-check (mandatory) the flexible bag as in Section 2.2.6. Set up the equipment as shown in Figure 3-2. Just prior to sampling, leak-check (mandatory) the train by placing a vacuum gauge at the condenser inlet, pulling a vacuum of at least 250 mm Hg (10 in. Hg), plugging the outlet at the quick disconnect, and then turning off the pump. The vacuum shall remain stable for at least 0.5 minute. Evacuate the flexible bag. Connect the probe and place it in the stack, with the tip of the probe positioned at the sampling point; purge the sampling line. Next, connect the bag and make sure that all connections are tight and leak free.

4.2.3 Sample at a constant rate, or as specified by the Administrator. The sampling run must be simultaneous with, and for the same total length of time as, the pollutant emission rate determination. Collect at least 30 liters (1.00 ft^3) of sample gas. Smaller volumes may be collected, subject to approval of the Administrator.

4.2.4 Obtain one integrated flue gas sample during each pollutant emission rate determination. For emission rate correction factor determination, analyze the sample within 4 hours after it is taken for percent CO_2 or percent O_2 (as outlined in Sections 4.2.5 through 4.2.7). The Orsat analyzer must be leak-checked (see Section 5) before the analysis. If excess air is desired, proceed as follows: (1) within 4 hours after the sample is taken, analyze it (as in Sections 4.2.5 through 4.2.7) for percent CO_2, O_2, and CO; (2) determine the percentage of the gas that is N_2 by subtracting the sum of the percent CO_2, percent O_2, and percent CO from 100 percent; (3) calculate percent excess air, as outlined in Section 6.2.

4.2.5 To ensure complete absorption of the CO_2, O_2, or if applicable, CO, make repeated passes through each absorbing solution until two consecutive readings are the same. Several passes (three or four) should be made between readings. (If constant readings cannot be obtained after three consecutive readings, replace the absorbing solution.)

4.2.6 Repeat the analysis until the following criteria are met:

4.2.6.1 For percent CO_2, repeat the analytical procedure until the results of any three analyses differ by no more than (a) 0.3 percent by volume when CO_2 is greater than 4.0 percent or (b) 0.2 percent by volume when CO_2 is less than or equal to 4.0 percent. Average the three acceptable values of percent CO_2 and report the results to the nearest 0.1 percent.

4.2.6.2 For percent O_2, repeat the analytical procedure until the results of any three analyses differ by no more

than (a) 0.3 percent by volume when O_2 is less than 15.0 percent or (b) 0.2 percent by volume when O_2 is greater than 15.0 percent. Average the three acceptable values of percent O_2 and report the results to the nearest 0.1 percent.

4.2.6.3 For percent CO, repeat the analytical procedure until the results of any three analyses differ by no more than 0.3 percent. Average the three acceptable values of percent CO and report the results to the nearest 0.1 percent.

4.2.7 After the analysis is completed, leak-check (mandatory) the Orsat analyzer once again, as described in Section 5. For the results of the analysis to be valid, the Orsat analyzer must pass this leak test before and after the analysis. Note: Although in most instances only CO_2 or O_2 is required, it is recommended that both CO_2 and O_2 be measured, and that Citation 5 in the Bibliography be used to validate the analytical data.

4.3 Multi-Point, Integrated Sampling and Analytical Procedure.

4.3.1 Both the minimum number of sampling points and the sampling point location shall be as specified in Section 3.3.1 of this method. The use of fewer points than specified is subject to the approval of the Administrator.

4.3.2 Follow the procedures outlined in Sections 4.2.2 through 4.2.7, except for the following: Traverse all sampling points and sample at each point for an equal length of time. Record sampling data as shown in Figure 3-3.

5. *Leak Check Procedure for Orsat Analyzers*

Moving an Orsat analyzer frequently causes it to leak. Therefore, an Orsat analyzer should be thoroughly leak-checked on site before the flue gas sample is introduced into it. The procedure on leak-checking an Orsat analyzer is:

5.1.1 Bring the liquid level in each pipette up to the reference mark on the capillary tubing and then close the pipette stopcock.

5.1.2 Raise the leveling bulb sufficiently to bring the confining liquid meniscus into the graduated portion of the burette and then close the manifold stopcock.

5.1.3 Record the meniscus position.

5.1.4 Observe the meniscus in the burette and the liquid level in the pipette for movement over the next 4 minutes.

5.1.5 For the Orsat analyzer to pass the leak-check, two conditions must be met.

5.1.5.1 The liquid level in each pipette must not fall below the bottom of the capillary tubing during this 4-minute interval.

5.1.5.2 The meniscus in the burette must not change by more than 0.2 ml during this 4-minute interval.

5.1.6 If the analyzer fails the leak-check procedure, all rubber connections and stopcocks should be checked until the cause of the leak is identified. Leaking stopcocks must be disassembled, cleaned, and regreased. Leaking rubber connections must be replaced. After the analyzer is reassembled, the leak-check procedure must be repeated.

6. *Calculations*

6.1 Nomenclature.

M_d = Dry molecular weight, g/g-mole (lb/lb-mole).
%EA = Percent excess air.
$\%CO_2$ = Percent CO_2 by volume (dry basis).
$\%O_2$ = Percent O_2 by volume (dry basis).
%CO = Percent CO by volume (dry basis).
$\%N_2$ = Percent N_2 by volume (dry basis).
0.264 = Ratio of O_2 to N_2 in air, v/v.
0.280 = Molecular weight of N_2 or CO, divided by 100.
0.320 = Molecular weight of O_2 divided by 100.
0.440 = Molecular weight of CO_2 divided by 100.

6.2 Percent Excess Air. Calculate the percent excess air (if applicable), by substituting the appropriate values of percent O_2, CO, and N_2 (obtained from Section 4.1.3 or 4.2.4) into Equation 3-1.

$$\%EA = \left[\frac{\%O_2 - 0.5\%CO}{0.264\,\%N_2 - \%O_2 + 0.5\,\%CO}\right]100$$

Equation 3-1

NOTE.—The equation above assumes that ambient air is used as the source of O_2 and that the fuel does not contain appreciable amounts of N_2 (as do coke oven or blast furnace gases). For those cases when appreciable amounts of N_2 are present (coal, oil, and natural gas do not contain appreciable amounts of N_2) or when oxygen enrichment is used, alternate methods, subject to approval of the Administrator, are required.

6.3 Dry Molecular Weight. Use Equation 3-2 to calculate the dry molecular weight of the stack gas.

$$M_d = 0.440(\%CO_2) + 0.320(\%O_2) + 0.280(\%N_2 + \%CO)$$

Equation 3-2

NOTE.—The above equation does not consider argon in air (about 0.9 percent, molecular weight of 37.7). A negative error of about 0.4 percent is introduced. The tester may opt to include argon in the analysis using procedures subject to approval of the Administrator.

7. *Bibliography*

1. Altshuller, A. P. Storage of Gases and Vapors in Plastic Bags. International Journal of Air and Water Pollution. 6:75-81. 1963.
2. Conner, William D. and J. S. Nader. Air Sampling Plastic Bags. Journal of the American Industrial Hygiene Association. 25:291-297. 1964.
3. Burrell Manual for Gas Analysts, Seventh edition. Burrell Corporation, 2223 Fifth Avenue, Pittsburgh, Pa. 15219. 1951.
4. Mitchell, W. J. and M. R. Midgett. Field Reliability of the Orsat Analyzer. Journal of Air Pollution Control Association 26:491-495. May 1976.
5. Shigehara, R. T., R. M. Neulicht, and W. S. Smith. Validating Orsat Analysis Data from Fossil Fuel-Fired Units. Stack Sampling News. 4(2):21-26. August, 1976.

METHOD 4—DETERMINATION OF MOISTURE CONTENT IN STACK GASES

1. *Principle and Applicability*

1.1 Principle. A gas sample is extracted at a constant rate from the source; moisture is removed from the sample stream and determined either volumetrically or gravimetrically.

1.2 Applicability. This method is applicable for determining the moisture content of stack gas.

Two procedures are given. The first is a reference method, for accurate determinations of moisture content (such as are needed to calculate emission data). The second is an approximation method, which provides estimates of percent moisture to aid in setting isokinetic sampling rates prior to a pollutant emission measurement run. The approximation method described herein is only a suggested approach; alternative means for approximating the moisture content, e.g., drying tubes, wet bulb-dry bulb techniques, condensation techniques, stoichiometric calculations, previous experience, etc., are also acceptable.

The reference method is often conducted simultaneously with a pollutant emission measurement run; when it is, calculation of percent isokinetic, pollutant emission rate, etc., for the run shall be based upon the results of the reference method or its equivalent; these calculations shall not be based upon the results of the approximation method, unless the approximation method is shown, to the satisfaction of the Administrator, U.S. Environmental Protection Agency, to be capable of yielding results within 1 percent H_2O of the reference method.

NOTE.—The reference method may yield questionable results when applied to saturated gas streams or to streams that contain water droplets. Therefore, when these conditions exist or are suspected, a second determination of the moisture content shall be made simultaneously with the reference method, as follows: Assume that the gas stream is saturated. Attach a temperature sensor [capable of measuring to ±1° C (2° F)] to the reference method probe. Measure the stack gas temperature at each traverse point (see Section 2.2.1) during the reference method traverse; calculate the average stack gas temperature. Next, determine the moisture percentage, either by: (1) using a psychrometric chart and making appropriate corrections if stack pressure is different from that of the chart, or (2) using saturation vapor pressure tables. In cases where the psychrometric chart or the saturation vapor pressure tables are not applicable (based on evaluation of the process), alternate methods, subject to the approval of the Administrator, shall be used.

2. *Reference Method*

The procedure described in Method 5 for determining moisture content is acceptable as a reference method.

2.1 Apparatus. A schematic of the sampling train used in this reference method is shown in Figure 4-1. All components shall be maintained and calibrated according to the procedure outlined in Method 5.

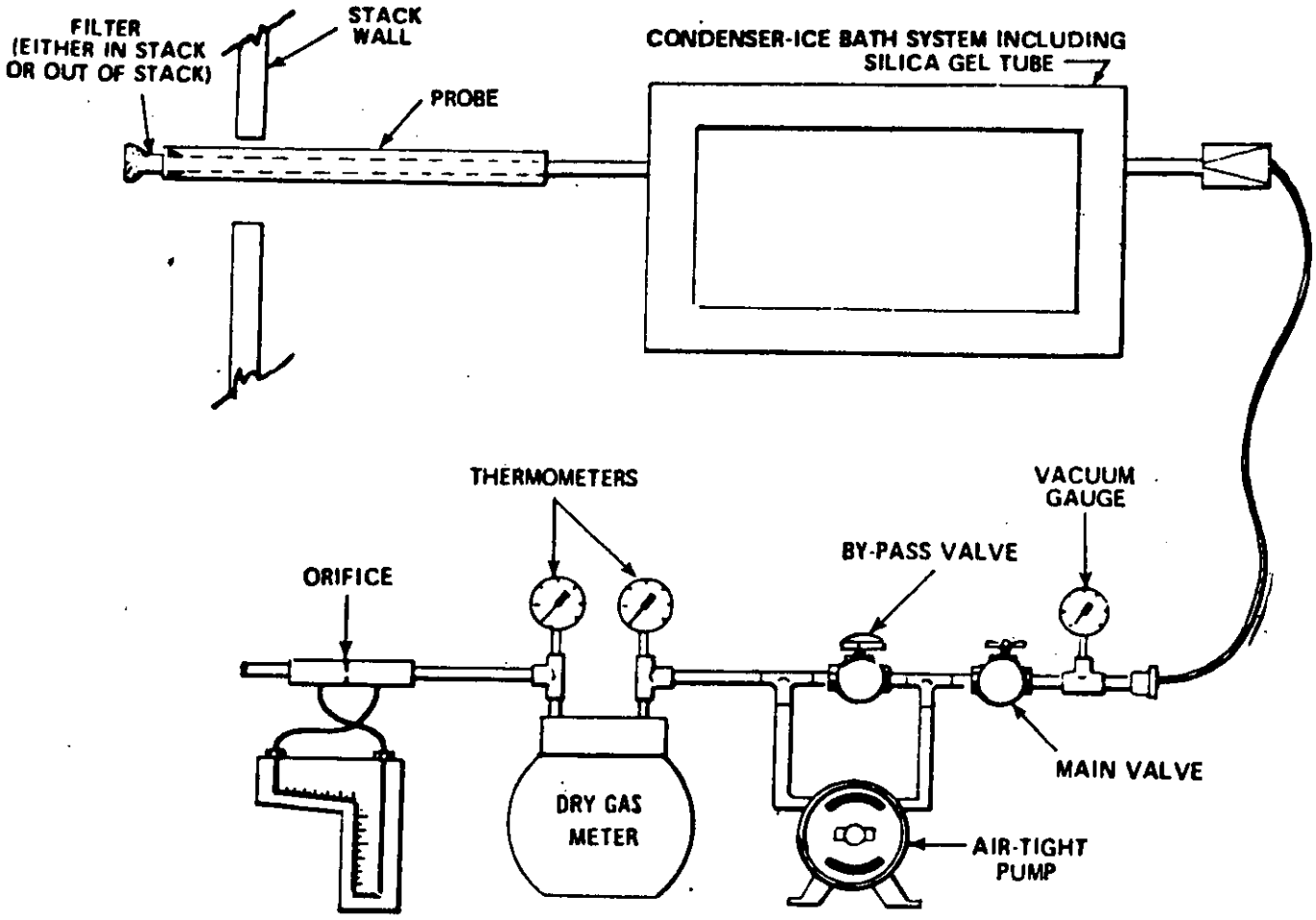

Figure 4-1. Moisture sampling train-reference method.

2.1.1 Probe. The probe is constructed of stainless steel or glass tubing, sufficiently heated to prevent water condensation, and is equipped with a filter, either in-stack (e.g., a plug of glass wool inserted into the end of the probe) or heated out-stack (e.g., as described in Method 5), to remove particulate matter.

When stack conditions permit, other metals or plastic tubing may be used for the probe, subject to the approval of the Administrator.

2.1.2 Condenser. The condenser consists of four impingers connected in series with ground glass, leak-free fittings or any similarly leak-free non-contaminating fittings. The first, third, and fourth impingers shall be of the Greenburg-Smith design, modified by replacing the tip with a 1.3 centimeter (½ inch) ID glass tube extending to about 1.3 cm (½ in.) from the bottom of the flask. The second impinger shall be of the Greenburg-Smith design with the standard tip. Modifications (e.g., using flexible connections between the impingers, using materials other than glass, or using flexible vacuum lines to connect the filter holder to the condenser) may be used, subject to the approval of the Administrator.

The first two impingers shall contain known volumes of water, the third shall be empty, and the fourth shall contain a known weight of 6- to 16-mesh indicating type silica gel, or equivalent desiccant. If the silica gel has been previously used, dry at 175° C (350° F) for 2 hours. New silica gel may be used as received. A thermometer, capable of measuring temperature to within 1° C (2° F), shall be placed at the outlet of the fourth impinger, for monitoring purposes.

Alternatively, any system may be used (subject to the approval of the Administrator) that cools the sample gas stream and allows measurement of both the water that has been condensed and the moisture leaving the condenser, each to within 1 ml or 1 g. Acceptable means are to measure the condensed water, either gravimetrically or volumetrically, and to measure the moisture leaving the condenser by: (1) monitoring the temperature and pressure at the exit of the condenser and using Dalton's law of partial pressures, or (2) passing the sample gas stream through a tared silica gel (or equivalent desiccant) trap, with exit gases kept below 20° C (68° F), and determining the weight gain.

If means other than silica gel are used to determine the amount of moisture leaving the condenser, it is recommended that silica gel (or equivalent) still be used between the condenser system and pump, to prevent moisture condensation in the pump and metering devices and to avoid the need to make corrections for moisture in the metered volume.

2.1.3 Cooling System. An ice bath container and crushed ice (or equivalent) are used to aid in condensing moisture.

2.1.4 Metering System. This system includes a vacuum gauge, leak-free pump, thermometers capable of measuring temperature to within 3° C (5.4° F), dry gas meter capable of measuring volume to within 2 percent, and related equipment as shown in Figure 4-1. Other metering systems, capable of maintaining a constant sampling rate and determining sample gas volume, may be used, subject to the approval of the Administrator.

2.1.5 Barometer. Mercury, aneroid, or other barometer capable of measuring atmospheric pressure to within 2.5 mm Hg (0.1 in. Hg) may be used. In many cases, the barometric reading may be obtained from a nearby national weather service station, in which case the station value (which is the absolute barometric pressure) shall be requested and an adjustment for elevation differences between the weather station and the sampling point shall be applied at a rate of minus 2.5 mm Hg (0.1 in. Hg) per 30 m (100 ft) elevation increase or vice versa for elevation decrease.

2.1.6 Graduated Cylinder and/or Balance. These items are used to measure condensed water and moisture caught in the silica gel to within 1 ml or 0.5 g. Graduated cylinders shall have subdivisions no greater than 2 ml. Most laboratory balances are capable of weighing to the nearest 0.5 g or less. These balances are suitable for use here.

2.2 Procedure. The following procedure is written for a condenser system (such as the impinger system described in Section 2.1.2) incorporating volumetric analysis to measure the condensed moisture, and silica gel and gravimetric analysis to measure the moisture leaving the condenser.

2.2.1 Unless otherwise specified by the Administrator, a minimum of eight traverse points shall be used for circular stacks having diameters less than 0.61 m (24 in.), a minimum of nine points shall be used for rectangular stacks having equivalent diameters less than 0.61 m (24 in.), and a minimum of twelve travers points shall be used in all other cases. The traverse points shall be located according to Method 1. The use of fewer points is subject to the approval of the Administrator. Select a suitable probe and probe length such that all traverse points can be sampled. Consider sampling from opposite sides of the stack (four total sampling ports) for large stacks, to permit use of shorter probe lengths. Mark the probe with heat resistant tape or by some other method to denote the proper distance into the stack or duct for each sampling point. Place known volumes of water in the first two impingers. Weigh and record the weight of the silica gel to the nearest 0.5 g, and transfer the silica gel to the fourth impinger; alternatively, the silica gel may first be transferred to the impinger, and the weight of the silica gel plus impinger recorded.

2.2.2 Select a total sampling time such that a minimum total gas volume of 0.60 scm (21 scf) will be collected, at a rate no greater than 0.021 m³/min (0.75 cfm). When both moisture content and pollutant emission rate are to be determined, the moisture determination shall be simultaneous with, and for the same total length of time as, the pollutant emission rate run, unless otherwise specified in an applicable subpart of the standards.

2.2.3 Set up the sampling train as shown in Figure 4-1. Turn on the probe heater and (if applicable) the filter heating system to temperatures of about 120° C (248° F), to prevent water condensation ahead of the condenser; allow time for the temperatures to stabilize. Place crushed ice in the ice bath container. It is recommended, but not required, that a leak check be done, as follows: Disconnect the probe from the first impinger or

(if applicable) from the filter holder. Plug the inlet to the first impinger (or filter holder) and pull a 380 mm (15 in.) Hg vacuum; a lower vacuum may be used, provided that it is not exceeded during the test. A leakage rate in excess of 4 percent of the average sampling rate or 0.00057 m³/min (0.02 cfm), whichever is less, is unacceptable. Following the leak check, reconnect the probe to the sampling train.

2.2.4 During the sampling run, maintain a sampling rate within 10 percent of constant rate, or as specified by the Administrator. For each run, record the data required on the example data sheet shown in Figure 4-2. Be sure to record the dry gas meter reading at the beginning and end of each sampling time increment and whenever sampling is halted. Take other appropriate readings at each sample point, at least once during each time increment.

2.2.5 To begin sampling, position the probe tip at the first traverse point. Immediately start the pump and adjust the flow to the desired rate. Traverse the cross section, sampling at each traverse point for an equal length of time. Add more ice and, if necessary, salt to maintain a temperature of less than 20° C (68° F) at the silica gel outlet.

2.2.6 After collecting the sample, disconnect the probe from the filter holder (or from the first impinger) and conduct a leak check (mandatory) as described in Section 2.2.3. Record the leak rate. If the leakage rate exceeds the allowable rate, the tester shall either reject the test results or shall correct the sample volume as in Section 6.3 of Method 5. Next, measure the volume of the moisture condensed to the nearest ml. Determine the increase in weight of the silica gel (or silica gel plus impinger) to the nearest 0.5 g. Record this information (see example data sheet, Figure 4-3) and calculate the moisture percentage, as described in 2.3 below.

2.3 Calculations. Carry out the following calculations, retaining at least one extra decimal figure beyond that of the acquired data. Round off figures after final calculation.

PLANT _____

LOCATION _____

OPERATOR _____

DATE _____

RUN NO. _____

AMBIENT TEMPERATURE _____

BAROMETRIC PRESSURE _____

PROBE LENGTH m(ft) _____

SCHEMATIC OF STACK CROSS SECTION

TRAVERSE POINT NUMBER	SAMPLING TIME (θ), min.	STACK TEMPERATURE °C (°F)	PRESSURE DIFFERENTIAL ACROSS ORIFICE METER (ΔH), mm(in.) H_2O	METER READING GAS SAMPLE VOLUME m^3 (ft^3)	ΔV_m m^3 (ft^3)	GAS SAMPLE TEMPERATURE AT DRY GAS METER		TEMPERATURE OF GAS LEAVING CONDENSER OR LAST IMPINGER, °C (°F)
						INLET ($T_{m_{in}}$), °C (°F)	OUTLET ($T_{m_{out}}$), °C (°F)	
TOTAL						Avg.	Avg.	
AVERAGE						Avg.		

Figure 4-2. Field moisture determination-reference method.

	IMPINGER VOLUME, ml	SILICA GEL WEIGHT, g
FINAL		
INITIAL		
DIFFERENCE		

Figure 4-3. Analytical data - reference method.

2.3.1 Nomenclature.

B_{ws} = Proportion of water vapor, by volume, in the gas stream.

M_w = Molecular weight of water, 18.0 g/g-mole (18.0 lb/lb-mole).

P_m = Absolute pressure (for this method, same as barometric pressure) at the dry gas meter, mm Hg (in. Hg).

P_{std} = Standard absolute pressure, 760 mm Hg (29.92 in. Hg).

R = Ideal gas constant, 0.06236 (mm Hg) (m^3)/(g-mole) (°K) for metric units and 21.85 (in. Hg) (ft^3)/(lb-mole) (°R) for English units.

T_m = Absolute temperature at meter, °K (°R).

T_{std} = Standard absolute temperature, 293° K (528° R).

V_m = Dry gas volume measured by dry gas meter, dcm (dcf).

ΔV_m = Incremental dry gas volume measured by dry gas meter at each traverse point, dcm (dcf).

$V_{m(std)}$ = Dry gas volume measured by the dry gas meter, corrected to standard conditions, dscm (dscf).

$V_{wc(std)}$ = Volume of water vapor condensed corrected to standard conditions, scm (scf).

$V_{wsg(std)}$ = Volume of water vapor collected in silica gel corrected to standard conditions, scm (scf).

V_f = Final volume of condenser water, ml.

V_i = Initial volume, if any, of condenser water, ml.

W_f = Final weight of silica gel or silica gel plus impinger, g.

W_i = Initial weight of silica gel or silica gel plus impinger, g.

Y = Dry gas meter calibration factor.

ρ_w = Density of water, 0.9982 g/ml (0.00220 lb/ml).

2.3.2 Volume of water vapor condensed.

$$V_{wc(std)} = \frac{(V_f - V_i)\rho_w R T_{std}}{P_{std} M_w} = K_1 (V_f - V_i)$$

Equation 4-1

where:

K_1 = 0.00133 m^3/ml for metric units
= 0.04707 ft^3/ml for English units

2.3.3 Volume of water vapor collected in silica gel.

$$V_{wsg(std)} = \frac{(W_f - W_i) R T_{std}}{P_{std} M_w} = K_2 (W_f - W_i)$$

Equation 4-2

where:

K_2 = 0.00236 m^3/g for metric units
= 0.0418 ft^3/g for English units

2.3.4 Sample gas volume.

$$V_{m(std)} = V_m Y \frac{(P_m)(T_{std})}{(P_{std})(T_m)} = K_3 Y \frac{V_m P_m}{T_m}$$

Equation 4-3

where:

K_3 = 0.3858 °K/mm Hg for metric units
= 17.64 °R/in. Hg for English units

NOTE.—If the post-test leak rate (Section 2.2.6) exceeds the allowable rate, correct the value of V_m in Equation 4-3, as described in Section 6.3 of Method 5.

2.3.5 Moisture Content.

$$B_{ws} = \frac{V_{wc(std)} + V_{wsg(std)}}{V_{wc(std)} + V_{wsg(std)} + V_{m(std)}}$$

Equation 4-4

NOTE.—In saturated or moisture droplet-laden gas streams, two calculations of the moisture content of the stack gas shall be made, one using a value based upon the saturated conditions (see Section 1.2), and another based upon the results of the impinger analysis. The lower of these two values of B_{ws} shall be considered correct.

2.3.6 Verification of constant sampling rate. For each time increment, determine the ΔV_m. Calculate the average. If the value for any time increment differs from the average by more than 10 percent, reject the results and repeat the run.

3. *Approximation Method*

The approximation method described below is presented only as a suggested method (see Section 1.2).

3.1 Apparatus.

3.1.1 Probe. Stainless steel or glass tubing, sufficiently heated to prevent water condensation and equipped with a filter (either in-stack or heated out-stack) to remove particulate matter. A plug of glass wool, inserted into the end of the probe, is a satisfactory filter.

3.1.2 Impingers. Two midget impingers, each with 30 ml capacity, or equivalent.

3.1.3 Ice Bath. Container and ice, to aid in condensing moisture in impingers.

3.1.4 Drying Tube. Tube packed with new or regenerated 6- to 16-mesh indicating-type silica gel (or equivalent desiccant), to dry the sample gas and to protect the meter and pump.

3.1.5 Valve. Needle valve, to regulate the sample gas flow rate.

3.1.6 Pump. Leak-free, diaphragm type, or equivalent, to pull the gas sample through the train.

3.1.7 Volume meter. Dry gas meter, sufficiently accurate to measure the sample volume within 2%, and calibrated over the range of flow rates and conditions actually encountered during sampling.

3.1.8 Rate Meter. Rotameter, to measure the flow range from 0 to 3 lpm (0 to 0.11 cfm).

3.1.9 Graduated Cylinder. 25 ml.

3.1.10 Barometer. Mercury, aneroid, or other barometer, as described in Section 2.1.5 above.

3.1.11 Vacuum Gauge. At least 760 mm Hg (30 in. Hg) gauge, to be used for the sampling leak check.

3.2 Procedure.

3.2.1 Place exactly 5 ml distilled water in each impinger. Assemble the apparatus without the probe as shown in Figure 4-4. Leak check the train by placing a vacuum gauge at the inlet to the first impinger and drawing a vacuum of at least 250 mm Hg (10 in. Hg), plugging the outlet of the rotameter, and then turning off the pump. The vacuum shall remain constant for at east one minute. Carefully release the vacuum gauge before unplugging the rotameter end.

3.2.2 Connect the probe, insert it into the stack, and sample at a constant rate of 2 lpm (0.071 cfm). Continue sampling until the dry gas meter registers about 30 liters (1.1 ft^3) or until visible liquid droplets are carried over from the first impinger to the second. Record temperature, pressure, and dry gas meter readings as required by Figure 4-5.

3.2.3 After collecting the sample, combine the contents of the two impingers and measure the volume to the nearest 0.5 ml.

3.3 Calculations. The calculation method presented is designed to estimate the moisture in the stack gas; therefore, other data, which are only necessary for accurate moisture determinations, are not collected. The following equations adequately estimate the moisture content, for the purpose of determining I-okinetic sampling rate settings.

3.3.1 Nomenclature.

B_{ws} = Approximate proportion, by volume, of water vapor in the gas stream leaving the second impinger, 0.025.

B_{wm} = Water vapor in the gas stream, proportion by volume.

M_w = Molecular weight of water, 18.0 g/g-mole (18.0 lb/lb-mole)

P_m = Absolute pressure (for this method, same as barometric pressure) at the dry gas meter.

P_{std} = Standard absolute pressure, 760 mm Hg (29.92 in. Hg).

R = Ideal gas constant, 0.06236 (mm Hg) (m^3)/(g-mole) (°K) for metric units and 21.85 (in. Hg) (ft^3)/(lb-mole) (°R) for English units.

T_m = Absolute temperature at meter, °K (°R)

T_{std} = Standard absolute temperature, 293° K (528° R)

V_f = Final volume of impinger contents, ml.

V_i = Initial volume of impinger contents, ml.

V_m = Dry gas volume measured by dry gas meter, dcm (dcf).

$V_{m(std)}$ = Dry gas volume measured by dry gas meter, corrected to standard conditions, dscm (dscf).

$V_{wc(std)}$ = Volume of water vapor condensed, corrected to standard conditions, scm (scf).

ρ_w = Density of water, 0.9982 g/ml (0.002201 lb/ml).

3.3.2 Volume of water vapor collected.

$$V_{wc} = \frac{(V_f - V_i)\rho_w R T_{std}}{P_{std} M_w} = K_1 (V_f - V_i)$$

Equation 4-5

where:

K_1 = 0.001333 m^3/ml for metric units
= 0.04707 ft^3/ml for English units.

3.3.3 Gas volume.

$$V_{m(std)} = V_m \left(\frac{P_m}{P_{std}}\right)\left(\frac{T_{std}}{T_m}\right) = K_2 \frac{V_m P_m}{T_m}$$

Equation 4-6

where:

K_2 = 0.3858 °K/mm Hg for metric units
= 17.64 °R/in. Hg for English units

3.3.4 Approximate moisture content.

$$B_{wm} = \frac{V_{wc}}{V_{wc} + V_{m(std)}} + B_{ws} = \frac{V_{wc}}{V_{wc} + V_{m(std)}} + (0.025)$$

Equation 4-7

4. *Calibration*

4.1 For the reference method, calibrate equipment as specified in the following sections of Method 5: Section 5.3 (metering system); Section 5.5 (temperature gauges); and Section 5.7 (barometer). The recommended leak check of the metering system (Section 5.6 of Method 5) also applies to the reference method. For the approximation method, use the procedures outlined in Section 5.1.1 of Method 6 to calibrate the metering system, and the procedure of Method 5, Section 5.7 to calibrate the barometer.

5. *Bibliography*

1. Air Pollution Engineering Manual (Second Edition). Danielson, J. A. (ed.). U.S. Environmental Protection Agency, Office of Air Quality Planning and Standards. Research Triangle Park, N.C. Publication No. AP-40. 1973.

2. Devorkin, Howard, et al. Air Pollution Source Testing Manual. Air Pollution Control District, Los Angeles, Calif. November, 1963.

3. Methods for Determination of Velocity, Volume, Dust and Mist Content of Gases. Western Precipitation Division of Joy Manufacturing Co., Los Angeles, Calif. Bulletin WP-50. 1968.

METHOD 5—DETERMINATION OF PARTICULATE EMISSIONS FROM STATIONARY SOURCES

1. *Principle and Applicability*

1.1 Principle. Particulate matter is withdrawn isokinetically from the source and collected on a glass fiber filter maintained at a temperature in the range of 120±14° C (248±25° F) or such other temperature as specified by an applicable subpart of the standards or approved by the Administrator, U.S. Environmental Protection Agency, for a particular application. The particulate mass, which includes any material that condenses at or above the filtration temperature, is determined gravimetrically after removal of uncombined water.

1.2 Applicability. This method is applicable for the determination of particulate emissions from stationary sources.

2. *Apparatus*

2.1 Sampling Train. A schematic of the sampling train used in this method is shown in Figure 5-1. Complete construction details are given in APTD-0581 (Citation 2 in Section 7); commercial models of this train are also available. For changes from APTD-0581 and for allowable modifications of the train shown in Figure 5-1, see the following subsections.

The operating and maintenance procedures for the sampling train are described in APTD-0576 (Citation 3 in Section 7). Since correct usage is important in obtaining valid results, all users should read APTD-0576 and adopt the operating and maintenance procedures outlined in it, unless otherwise specified herein. The sampling train consists of the following components:

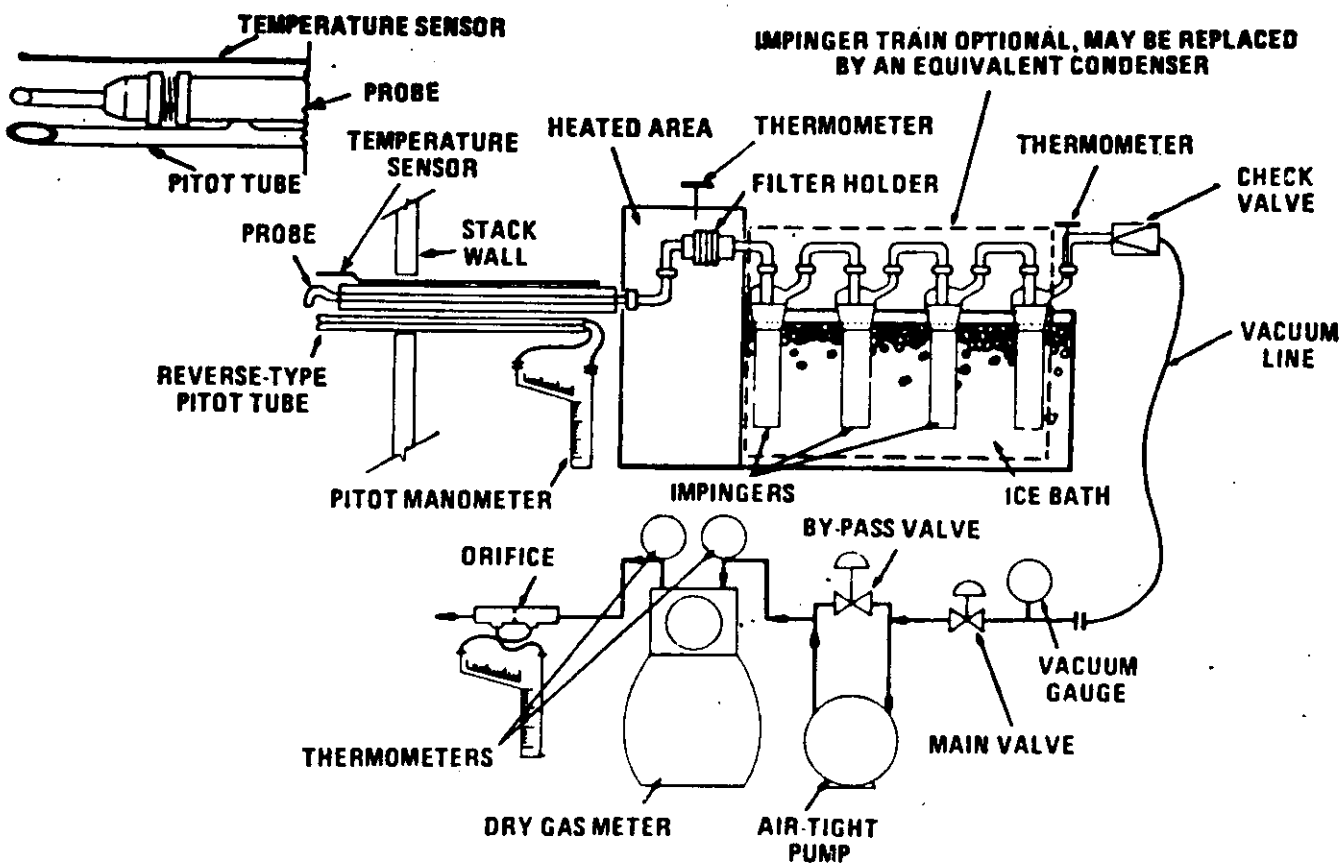

Figure 5 1. Particulate-sampling train.

2.1.1 Probe Nozzle. Stainless steel (316) or glass with sharp, tapered leading edge. The angle of taper shall be ≤30° and the taper shall be on the outside to preserve a constant internal diameter. The probe nozzle shall be of the button-hook or elbow design, unless otherwise specified by the Administrator. If made of stainless steel, the nozzle shall be constructed from seamless tubing; other materials of construction may be used, subject to the approval of the Administrator.

A range of nozzle sizes suitable for isokinetic sampling should be available, e.g., 0.32 to 1.27 cm (⅛ to ½ in.)—or larger if higher volume sampling trains are used—inside diameter (ID) nozzles in increments of 0.16 cm (1/16 in.). Each nozzle shall be calibrated according to the procedures outlined in Section 5.

2.1.2 Probe Liner. Borosilicate or quartz glass tubing with a heating system capable of maintaining a gas temperature at the exit end during sampling of 120±14° C (248±25° F), or such other temperature as specified by an applicable subpart of the standards or approved by the Administrator for a particular application. (The tester may opt to operate the equipment at a temperature lower than that specified.) Since the actual temperature at the outlet of the probe is not usually monitored during sampling, probes constructed according to APTD-0581 and utilizing the calibration curves of APTD-0576 (or calibrated according to the procedure outlined in APTD-0576) will be considered acceptable.

Either borosilicate or quartz glass probe liners may be used for stack temperatures up to about 480° C (900° F); quartz liners shall be used for temperatures between 480 and 900° C (900 and 1,650° F). Both types of liners may be used at higher temperatures than specified for short periods of time, subject to the approval of the Administrator. The softening temperature for borosilicate is 820° C (1,508° F), and for quartz it is 1,500° C (2,732° F).

Whenever practical, every effort should be made to use borosilicate or quartz glass probe liners. Alternatively, metal liners (e.g., 316 stainless steel, Incoloy 825,[2] or other corrosion resistant metals) made of seamless tubing may be used, subject to the approval of the Administrator.

2.1.3 Pitot Tube, Type S, as described in Section 2.1 of Method 2, or other device approved by the Administrator. The pitot tube shall be attached to the probe (as shown in Figure 5-1) to allow constant monitoring of the stack gas velocity. The impact (high pressure) opening plane of the pitot tube shall be even with or above the nozzle entry plane (see Method 2, Figure 2-6b) during sampling. The Type S pitot tube assembly shall have a known coefficient, determined as outlined in Section 4 of Method 2.

2.1.4 Differential Pressure Gauge. Inclined manometer or equivalent device (two), as described in Section 2.2 of Method 2. One manometer shall be used for velocity head (Δp) readings, and the other, for orifice differential pressure readings.

2.1.5 Filter Holder. Borosilicate glass, with a glass frit filter support and a silicone rubber gasket. Other materials of construction (e.g., stainless steel, Teflon, Viton) may be used, subject to approval of the Administrator. The holder design shall provide a positive seal against leakage from the outside or around the filter. The holder shall be attached immediately at the outlet of the probe (or cyclone, if used).

2.1.6 Filter Heating System. Any heating system capable of maintaining a temperature around the filter holder during sampling of 120±14° C (248±25° F), or such other temperature as specified by an applicable subpart of the standards or approved by the Administrator for a particular application. Alternatively, the tester may opt to operate the equipment at a temperature lower than that specified. A temperature gauge capable of measuring temperature to within 3° C (5.4° F) shall be installed so that the temperature around the filter holder can be regulated and monitored during sampling. Heating systems other than the one shown in APTD-0581 may be used.

2.1.7 Condenser. The following system shall be used to determine the stack gas moisture content: Four impingers connected in series with leak-free ground glass fittings or any similar leak-free non-contaminating fittings. The first, third, and fourth impingers shall be of the Greenburg-Smith design, modified by replacing the tip with 1.3 cm (½ in.) ID glass tube extending to about 1.3 cm (½ in.) from the bottom of the flask. The second impinger shall be of the Greenburg-Smith design with the standard tip. Modifications (e.g., using flexible connections between the impingers, using materials other than glass, or using flexible vacuum lines to connect the filter holder to the condenser) may be used, subject to the approval of the Administrator. The first and second impingers shall contain known quantities of water (Section 4.1.3), the third shall be empty, and the fourth shall contain a known weight of silica gel, or equivalent desiccant. A thermometer, capable of measuring temperature to within 1° C (2° F) shall be placed at the outlet of the fourth impinger for monitoring purposes.

Alternatively, any system that cools the sample gas stream and allows measurement of the water condensed and moisture leaving the condenser, each to within 1 ml or 1 g may be used, subject to the approval of the Administrator. Acceptable means are to measure the condensed water either gravimetrically or volumetrically and to measure the moisture leaving the condenser by: (1) monitoring the temperature and pressure at the exit of the condenser and using Dalton's law of partial pressures; or (2) passing the sample gas stream through a tared silica gel (or equivalent desiccant) trap with exit gases kept below 20° C (68° F) and determining the weight gain.

If means other than silica gel are used to determine the amount of moisture leaving the condenser, it is recommended that silica gel (or equivalent) still be used between the condenser system and pump to prevent moisture condensation in the pump and metering devices and to avoid the need to make corrections for moisture in the metered volume.

NOTE.—If a determination of the particulate matter collected in the impingers is desired in addition to moisture content, the impinger system described above shall be used, without modification. Individual States or control agencies requiring this information shall be contacted as to the sample recovery and analysis of the impinger contents.

2.1.8 Metering System. Vacuum gauge, leak-free pump, thermometers capable of measuring temperature to within 3° C (5.4° F), dry gas meter capable of measuring volume to within 2 percent, and related equipment, as shown in Figure 5-1. Other metering systems capable of maintaining sampling rates within 10 percent of isokinetic and of determining sample volumes to within 2 percent may be used, subject to the approval of the Administrator. When the metering system is used in conjunction with a pitot tube, the system shall enable checks of isokinetic rates.

Sampling trains utilizing metering systems designed for higher flow rates than that described in APTD-0581 or APTD-0576 may be used provided that the specifications of this method are met.

2.1.9 Barometer. Mercury, aneroid, or other barometer capable of measuring atmospheric pressure to within 2.5 mm Hg (0.1 in. Hg). In many cases, the barometric reading may be obtained from a nearby national weather service station, in which case the station value (which is

[2] Mention of trade names or specific product does not constitute endorsement by the Environmental Protection Agency.

the absolute barometric pressure) shall be requested and an adjustment for elevation differences between the weather station and sampling point shall be applied at a rate of minus 2.5 mm Hg (0.1 in. Hg) per 30 m (100 ft) elevation increase or vice versa for elevation decrease.

2.1.10 Gas Density Determination Equipment. Temperature sensor and pressure gauge, as described in Sections 2.3 and 2.4 of Method 2, and gas analyzer, if necessary, as described in Method 3. The temperature sensor shall, preferably, be permanently attached to the pitot tube or sampling probe in a fixed configuration, such that the tip of the sensor extends beyond the leading edge of the probe sheath and does not touch any metal. Alternatively, the sensor may be attached just prior to use in the field. Note, however, that if the temperature sensor is attached in the field, the sensor must be placed in an interference-free arrangement with respect to the Type S pitot tube openings (see Method 2, Figure 2-7). As a second alternative, if a difference of not more than 1 percent in the average velocity measurement is to be introduced, the temperature gauge need not be attached to the probe or pitot tube. (This alternative is subject to the approval of the Administrator.)

2.2 Sample Recovery. The following items are needed.

2.2.1 Probe-Liner and Probe-Nozzle Brushes. Nylon bristle brushes with stainless steel wire handles. The probe brush shall have extensions (at least as long as the probe) of stainless steel, Nylon, Teflon, or similarly inert material. The brushes shall be properly sized and shaped to brush out the probe liner and nozzle.

2.2.2 Wash Bottles—Two. Glass wash bottles are recommended; polyethylene wash bottles may be used at the option of the tester. It is recommended that acetone not be stored in polyethylene bottles for longer than a month.

2.2.3 Glass Sample Storage Containers. Chemically resistant, borosilicate glass bottles, for acetone washes, 500 ml or 1000 ml. Screw cap liners shall either be rubber-backed Teflon or shall be constructed so as to be leak-free and resistant to chemical attack by acetone. (Narrow mouth glass bottles have been found to be less prone to leakage.) Alternatively, polyethylene bottles may be used.

2.2.4 Petri Dishes. For filter samples, glass or polyethylene, unless otherwise specified by the Administrator.

2.2.5 Graduated Cylinder and/or Balance. To measure condensed water to within 1 ml or 1 g. Graduated cylinders shall have subdivisions no greater than 2 ml. Most laboratory balances are capable of weighing to the nearest 0.5 g or less. Any of these balances is suitable for use here and in Section 2.3.4.

2.2.6 Plastic Storage Containers. Air-tight containers to store silica gel.

2.2.7 Funnel and Rubber Policeman. To aid in transfer of silica gel to container; not necessary if silica gel is weighed in the field.

2.2.8 Funnel. Glass or polyethlene, to aid in sample recovery.

2.3 Analysis. For analysis, the following equipment is needed.

2.3.1 Glass Weighing Dishes.

2.3.2 Desiccator.

2.3.3 Analytical Balance. To measure to within 0.1 mg.

2.3.4 Balance. To measure to within 0.5 g.

2.3.5 Beakers 250 ml.

2.3.6 Hygrometer. To measure the relative humidity of the laboratory environment.

2.3.7 Temperature Gauge. To measure the temperature of the laboratory environment.

3. *Reagents*

3.1 Sampling. The reagents used in sampling are as follows:

3.1.1 Filters. Glass fiber filters, without organic binder, exhibiting at least 99.95 percent efficiency (≤0.05 percent penetration) on 0.3-micron dioctyl phthalate smoke particles. The filter efficiency test shall be conducted in accordance with ASTM standard method D 2986-71. Test data from the supplier's quality control program are sufficient for this purpose.

3.1.2 Silica Gel. Indicating type, 6 to 16 mesh. If previously used, dry at 175° C (350° F) for 2 hours. New silica gel may be used as received. Alternatively, other types of desiccants (equivalent or better) may be used, subject to the approval of the Administrator.

3.1.3 Water. When analysis of the material caught in the impingers is required, distilled water shall be used. Run blanks prior to field use to eliminate a high blank on test samples.

3.1.4 Crushed Ice.

3.1.5 Stopcock Grease. Acetone-insoluble, heat-stable silicone grease. This is not necessary if screw-on connectors with Teflon sleeves, or similar, are used. Alternatively, other types of stopcock grease may be used, subject to the approval of the Administrator.

3.2 Sample Recovery. Acetone—reagent grade, ≤0.001 percent residue, in glass bottles—is required. Acetone from metal containers generally has a high residue blank and should not be used. Sometimes, suppliers transfer acetone to glass bottles from metal containers; thus, acetone blanks shall be run prior to field use and only acetone with low blank values (≤0.001 percent) shall be used. In no case shall a blank value of greater than 0.001 percent of the weight of acetone used be subtracted from the sample weight.

3.3 Analysis. Two reagents are required for the analysis:

3.3.1 Acetone. Same as 3.2.

3.3.2 Desiccant. Anhydrous calcium sulfate, indicating type. Alternatively, other types of desiccants may be used, subject to the approval of the Administrator.

4. *Procedure*

4.1 Sampling. The complexity of this method is such that, in order to obtain reliable results, testers should be trained and experienced with the test procedures.

4.1.1 Pretest Preparation. All the components shall be maintained and calibrated according to the procedure described in APTD-0576, unless otherwise specified herein.

Weigh several 200 to 300 g portions of silica gel in air-tight containers to the nearest 0.5 g. Record the total weight of the silica gel plus container, on each container. As an alternative, the silica gel need not be preweighed, but may be weighed directly in its impinger or sampling holder just prior to train assembly.

Check filters visually against light for irregularities and flaws or pinhole leaks. Label filters of the proper diameter on the back side near the edge using numbering machine ink. As an alternative, label the shipping containers (glass or plastic petri dishes) and keep the filters in these containers at all times except during sampling and weighing.

Desiccate the filters at 20±5.6° C (68±10° F) and ambient pressure for at least 24 hours and weigh at intervals of at least 6 hours to a constant weight, i.e., <0.5 mg change from previous weighing; record results to the nearest 0.1 mg. During each weighing the filter must not be exposed to the laboratory atmosphere for a period greater than 2 minutes and a relative humidity above 50 percent. Alternatively (unless otherwise specified by the Administrator), the filters may be oven dried at 105° C (220° F) for 2 to 3 hours, desiccated for 2 hours, and weighed. Procedures other than those described, which account for relative humidity effects, may be used, subject to the approval of the Administrator.

4.1.2 Preliminary Determinations. Select the sampling site and the minimum number of sampling points according to Method 1 or as specified by the Administrator. Determine the stack pressure, temperature, and the range of velocity heads using Method 2; it is recommended that a leak-check of the pitot lines (see Method 2, Section 3.1) be performed. Determine the moisture content using Approximation Method 4 or its alternatives for the purpose of making isokinetic sampling rate settings. Determine the stack gas dry molecular weight, as described in Method 2, Section 3.6; if integrated Method 3 sampling is used for molecular weight determination, the integrated bag sample shall be taken simultaneously with, and for the same total length of time as, the particulate sample run.

Select a nozzle size based on the range of velocity heads, such that it is not necessary to change the nozzle size in order to maintain isokinetic sampling rates. During the run, do not change the nozzle size. Ensure that the proper differential pressure gauge is chosen for the range of velocity heads encountered (see Section 2.2 of Method 2).

Select a suitable probe liner and probe length such that all traverse points can be sampled. For large stacks, consider sampling from opposite sides of the stack to reduce the length of probes.

Select a total sampling time greater than or equal to the minimum total sampling time specified in the test procedures for the specific industry such that (1) the sampling time per point is not less than 2 min (or some greater time interval as specified by the Administrator), and (2) the sample volume taken (corrected to standard conditions) will exceed the required minimum total gas sample volume. The latter is based on an approximate average sampling rate.

It is recommended that the number of minutes sampled at each point be an integer or an integer plus one-half minute, in order to avoid timekeeping errors.

In some circumstances, e.g., batch cycles, it may be necessary to sample for shorter times at the traverse points and to obtain smaller gas sample volumes. In these cases, the Administrator's approval must first be obtained.

4.1.3 Preparation of Collection Train. During preparation and assembly of the sampling train, keep all openings where contamination can occur covered until just prior to assembly or until sampling is about to begin.

Place 100 ml of water in each of the first two impingers, leave the third impinger empty, and transfer approximately 200 to 300 g of preweighed silica gel from its container to the fourth impinger. More silica gel may be used, but care should be taken to ensure that it is not entrained and carried out from the impinger during sampling. Place the container in a clean place for later use in the sample recovery. Alternatively, the weight of the silica gel plus impinger may be determined to the nearest 0.5 g and recorded.

Using a tweezer or clean disposable surgical gloves, place a labeled (identified) and weighed filter in the filter holder. Be sure that the filter is properly centered and the gasket properly placed so as to prevent the sample gas stream from circumventing the filter. Check the filter for tears after assembly is completed.

When glass liners are used, install the selected nozzle using a Viton A O-ring when stack temperatures are less than 260° C (500° F) and an asbestos string gasket when temperatures are higher. See APTD-0576 for details. Other connecting systems using either 316 stainless steel or Teflon ferrules may be used. When metal liners are used, install the nozzle as above or by a leak-free direct mechanical connection. Mark the probe with heat resistant tape or by some other method to denote the proper distance into the stack or duct for each sampling point.

Set up the train as in Figure 5-1, using (if necessary) a very light coat of silicone grease on all ground glass joints, greasing only the outer portion (see APTD-0576) to avoid possibility of contamination by the silicone grease. Subject to the approval of the Administrator, a glass cyclone may be used between the probe and filter holder when the total particulate catch is expected to exceed 100 mg or when water droplets are present in the stack gas.

Place crushed ice around the impingers.

4.1.4 Leak-Check Procedures.

4.1.4.1 Pretest Leak-Check. A pretest leak-check is recommended, but not required. If the tester opts to conduct the pretest leak-check, the following procedure shall be used.

After the sampling train has been assembled, turn on and set the filter and probe heating systems at the desired operating temperatures. Allow time for the temperatures to stabilize. If a Viton A O-ring or other leak-free connection is used in assembling the probe nozzle to the probe liner, leak-check the train at the sampling site by plugging the nozzle and pulling a 380 mm Hg (15 in. Hg) vacuum.

NOTE.—A lower vacuum may be used, provided that it is not exceeded during the test.

If an asbestos string is used, do not connect the probe to the train during the leak-check. Instead, leak-check the train by first plugging the inlet to the filter holder (cyclone, if applicable) and pulling a 380 mm Hg (15 in. Hg) vacuum (see Note immediately above). Then connect the probe to the train and leak-check at about 25 mm Hg (1 in. Hg) vacuum; alternatively, the probe may be leak-checked with the rest of the sampling train, in one step, at 380 mm Hg (15 in. Hg) vacuum. Leakage rates in excess of 4 percent of the average sampling rate or 0.00057 m^3/min (0.02 cfm), whichever is less, are unacceptable.

The following leak-check instructions for the sampling train described in APTD-0576 and APTD-0581 may be helpful. Start the pump with bypass valve fully open and coarse adjust valve completely closed. Partially open the coarse adjust valve and slowly close the bypass valve until the desired vacuum is reached. Do not reverse direction of bypass valve, this will cause water to back up into the filter holder. If the desired vacuum is exceeded, either leak-check at this higher vacuum or end the leak check as shown below and start over.

When the leak-check is completed, first slowly remove the plug from the inlet to the probe, filter holder, or cyclone (if applicable) and immediately turn off the vacuum pump. This prevents the water in the impingers from being forced backward into the filter holder and silica gel from being entrained backward into the third impinger.

4.1.4.2 Leak-Checks During Sample Run. If, during the sampling run, a component (e.g., filter assembly or impinger) change becomes necessary, a leak-check shall be conducted immediately before the change is made. The leak-check shall be done according to the procedure outlined in Section 4.1.4.1 above, except that it shall be done at a vacuum equal to or greater than the maximum value recorded up to that point in the test. If the leakage rate is found to be no greater than 0.00057 m^3/min (0.02 cfm) or 4 percent of the average sampling rate (whichever is less), the results are acceptable, and no correction will need to be applied to the total volume of dry gas metered; if, however, a higher leakage rate is obtained, the tester shall either record the leakage rate and plan to correct the sample volume as shown in Section 6.3 of this method, or shall void the sampling run.

Immediately after component changes, leak-checks are optional; if such leak-checks are done, the procedure outlined in Section 4.1.4.1 above shall be used.

4.1.4.3 Post-test Leak-Check. A leak-check is mandatory at the conclusion of each sampling run. The leak-check shall be done in accordance with the procedures outlined in Section 4.1.4.1, except that it shall be conducted at a vacuum equal to or greater than the maximum value reached during the sampling run. If the leakage rate is found to be no greater than 0.00057 m^3/min (0.02 cfm) or 4 percent of the average sampling rate (whichever is less), the results are acceptable, and no correction need be applied to the total volume of dry gas metered. If, however, a higher leakage rate is obtained, the tester shall either record the leakage rate and correct the sample volume as shown in Section 6.3 of this method, or shall void the sampling run.

4.1.5 Particulate Train Operation. During the sampling run, maintain an isokinetic sampling rate (within 10 percent of true isokinetic unless otherwise specified by the Administrator) and a temperature around the filter of 120±14° C (248±25° F), or such other temperature as specified by an applicable subpart of the standards or approved by the Administrator.

For each run, record the data required on a data sheet such as the one shown in Figure 5-2. Be sure to record the initial dry gas meter reading. Record the dry gas meter readings at the beginning and end of each sampling time increment, when changes in flow rates are made, before and after each leak check, and when sampling is halted.

Take other readings required by Figure 5-2 at least once at each sample point during each time increment and additional readings when significant changes (20 percent variation in velocity head readings) necessitate additional adjustments in flow rate. Level and zero the manometer. Because the manometer level and zero may drift due to vibrations and temperature changes, make periodic checks during the traverse.

Clean the portholes prior to the test run to minimize the chance of sampling deposited material. To begin sampling, remove the nozzle cap, verify that the filter and probe heating systems are up to temperature, and that the pitot tube and probe are properly positioned. Position the nozzle at the first traverse point with the tip pointing directly into the gas stream. Immediately start the pump and adjust the flow to isokinetic conditions. Nomographs are available, which aid in the rapid adjustment of the isokinetic sampling rate without excessive computations. These nomographs are designed for use when the Type S pitot tube coefficient is 0.84±0.02, and the stack gas equivalent density (dry molecular weight) is equal to 29±4. APTD-0576 details the procedure for using the nomographs. If C_p and M_d are outside the above stated ranges do not use the nomographs unless appropriate steps (see Citation 7 in Section 7) are taken to compensate for the deviations.

PLANT _____

LOCATION _____

OPERATOR _____

DATE _____

RUN NO. _____

SAMPLE BOX NO. _____

METER BOX NO. _____

METER $\Delta H_@$ _____

C FACTOR _____

PITOT TUBE COEFFICIENT, C_p _____

SCHEMATIC OF STACK CROSS SECTION

AMBIENT TEMPERATURE _____

BAROMETRIC PRESSURE _____

ASSUMED MOISTURE, % _____

PROBE LENGTH, m (ft) _____

NOZZLE IDENTIFICATION NO. _____

AVERAGE CALIBRATED NOZZLE DIAMETER, cm (in.) _____

PROBE HEATER SETTING _____

LEAK RATE, m^3/min. (cfm) _____

PROBE LINER MATERIAL _____

STATIC PRESSURE, mm Hg (in. Hg) _____

FILTER NO. _____

TRAVERSE POINT NUMBER	SAMPLING TIME (θ), min.	VACUUM mm Hg (in. Hg)	STACK TEMPERATURE (T_s) °C (°F)	VELOCITY HEAD (ΔP_s), mm(in.)H_2O	PRESSURE DIFFERENTIAL ACROSS ORIFICE METER mm H_2O (in. H_2O)	GAS SAMPLE VOLUME m^3 (ft^3)	GAS SAMPLE TEMPERATURE AT DRY GAS METER		FILTER HOLDER TEMPERATURE, °C (°F)	TEMPERATURE OF GAS LEAVING CONDENSER OR LAST IMPINGER, °C (°F)
							INLET °C (°F)	OUTLET °C (°F)		
TOTAL							Avg.	Avg.		
AVERAGE							Avg.			

Figure 5-2. Particulate field data.

When the stack is under significant negative pressure (height of impinger stem), take care to close the coarse adjust valve before inserting the probe into the stack to prevent water from backing into the filter holder. If necessary, the pump may be turned on with the coarse adjust valve closed.

When the probe is in position, block off the openings around the probe and porthole to prevent unrepresentative dilution of the gas stream.

Traverse the stack cross-section, as required by Method 1 or as specified by the Administrator, being careful not to bump the probe nozzle into the stack walls when sampling near the walls or when removing or inserting the probe through the portholes; this minimizes the chance of extracting deposited material.

During the test run, make periodic adjustments to keep the temperature around the filter holder at the proper level; add more ice and, if necessary, salt to maintain a temperature of less than 20° C (68° F) at the condenser/silica gel outlet. Also, periodically check the level and zero of the manometer.

If the pressure drop across the filter becomes too high, making isokinetic sampling difficult to maintain, the filter may be replaced in the midst of a sample run. It is recommended that another complete filter assembly be used rather than attempting to change the filter itself. Before a new filter assembly is installed, conduct a leak-check (see Section 4.1.4.2). The total particulate weight shall include the summation of all filter assembly catches.

A single train shall be used for the entire sample run, except in cases where simultaneous sampling is required in two or more separate ducts or at two or more different locations within the same duct, or, in cases where equipment failure necessitates a change of trains. In all other situations, the use of two or more trains will be subject to the approval of the Administrator.

Note that when two or more trains are used, separate analyses of the front-half and (if applicable) impinger catches from each train shall be performed, unless identical nozzle sizes were used on all trains, in which case, the front-half catches from the individual trains may be combined (as may the impinger catches) and one analysis of front-half catch and one analysis of impinger catch may be performed. Consult with the Administrator for details concerning the calculation of results when two or more trains are used.

At the end of the sample run, turn off the coarse adjust valve, remove the probe and nozzle from the stack, turn off the pump, record the final dry gas meter reading, and conduct a post-test leak-check, as outlined in Section 4.1.4.3. Also, leak-check the pitot lines as described in Method 2, Section 3.1; the lines must pass this leak-check, in order to validate the velocity head data.

4.1.6 Calculation of Percent Isokinetic. Calculate percent isokinetic (see Calculations, Section 6) to determine whether the run was valid or another test run should be made. If there was difficulty in maintaining isokinetic rates due to source conditions, consult with the Administrator for possible variance on the isokinetic rates.

4.2 Sample Recovery. Proper cleanup procedure begins as soon as the probe is removed from the stack at the end of the sampling period. Allow the probe to cool.

When the probe can be safely handled, wipe off all external particulate matter near the tip of the probe nozzle and place a cap over it to prevent losing or gaining particulate matter. Do not cap off the probe tip tightly while the sampling train is cooling down as this would create a vacuum in the filter holder, thus drawing water from the impingers into the filter holder.

Before moving the sample train to the cleanup site, remove the probe from the sample train, wipe off the silicone grease, and cap the open outlet of the probe. Be careful not to lose any condensate that might be present. Wipe off the silicone grease from the filter inlet where the probe was fastened and cap it. Remove the umbilical cord from the last impinger and cap the impinger. If a flexible line is used between the first impinger or condenser and the filter holder, disconnect the line at the filter holder and let any condensed water or liquid drain into the impingers or condenser. After wiping off the silicone grease, cap off the filter holder outlet and impinger inlet. Either ground-glass stoppers, plastic caps, or serum caps may be used to close these openings.

Transfer the probe and filter-impinger assembly to the cleanup area. This area should be clean and protected from the wind so that the chances of contaminating or losing the sample will be minimized.

Save a portion of the acetone used for cleanup as a blank. Take 200 ml of this acetone directly from the wash bottle being used and place it in a glass sample container labeled "acetone blank."

Inspect the train prior to and during disassembly and note any abnormal conditions. Treat the samples as follows:

Container No. 1. Carefully remove the filter from the filter holder and place it in its identified petri dish container. Use a pair of tweezers and/or clean disposable surgical gloves to handle the filter. If it is necessary to fold the filter, do so such that the particulate cake is inside the fold. Carefully transfer to the petri dish any particulate matter and/or filter fibers which adhere to the filter holder gasket, by using a dry nylon bristle brush and/or a sharp-edged blade. Seal the container.

Container No. 2. Taking care to see that dust on the outside of the probe or other exterior surfaces does not get into the sample, quantitatively recover particulate matter or any condensate from the probe nozzle, probe

fitting, probe liner, and front half of the filter holder by washing these components with acetone and placing the wash in a glass container. Distilled water may be used instead of acetone when approved by the Administrator and shall be used when specified by the Administrator; in these cases, save a water blank and follow the Administrator's directions on analysis. Perform the acetone rinses as follows:

Carefully remove the probe nozzle and clean the inside surface by rinsing with acetone from a wash bottle and brushing with a nylon bristle brush. Brush until the acetone rinse shows no visible particles, after which make a final rinse of the inside surface with acetone.

Brush and rinse the inside parts of the Swagelok fitting with acetone in a similar way until no visible particles remain.

Rinse the probe liner with acetone by tilting and rotating the probe while squirting acetone into its upper end so that all inside surfaces will be wetted with acetone. Let the acetone drain from the lower end into the sample container. A funnel (glass or polyethylene) may be used to aid in transferring liquid washes to the container. Follow the acetone rinse with a probe brush. Hold the probe in an inclined position, squirt acetone into the upper end as the probe brush is being pushed with a twisting action through the probe; hold a sample container underneath the lower end of the probe, and catch any acetone and particulate matter which is brushed from the probe. Run the brush through the probe three times or more until no visible particulate matter is carried out with the acetone or until none remains in the probe liner on visual inspection. With stainless steel or other metal probes, run the brush through in the above prescribed manner at least six times since metal probes have small crevices in which particulate matter can be entrapped. Rinse the brush with acetone, and quantitatively collect these washings in the sample container. After the brushing, make a final acetone rinse of the probe as described above.

It is recommended that two people be used to clean the probe to minimize sample losses. Between sampling runs, keep brushes clean and protected from contamination.

After ensuring that all joints have been wiped clean of silicone grease, clean the inside of the front half of the filter holder by rubbing the surfaces with a nylon bristle brush and rinsing with acetone. Rinse each surface three times or more if needed to remove visible particulate. Make a final rinse of the brush and filter holder. Carefully rinse out the glass cyclone, (also if applicable). After all acetone washings and particulate matter have been collected in the sample container, tighten the lid on the sample container so that acetone will not leak out when it is shipped to the laboratory. Mark the height of the fluid level to determine whether or not leakage occurred during transport. Label the container to clearly identify its contents.

Container No. 9. Note the color of the indicating silica gel to determine if it has been completely spent and make a notation of its condition. Transfer the silica gel from the fourth impinger to its original container and seal. A funnel may make it easier to pour the silica gel without spilling. A rubber policeman may be used as an aid in removing the silica gel from the impinger. It is not necessary to remove the small amount of dust particles that may adhere to the impinger wall and are difficult to remove. Since the gain in weight is to be used for moisture calculations, do not use any water or other liquids to transfer the silica gel. If a balance is available in the field, follow the procedure for container No. 3 in Section 4.3.

Impinger Water. Treat the impinger as follows. Make a notation of any color or film in the liquid catch. Measure the liquid which is in the first three impingers to within ±1 ml by using a graduated cylinder or by weighing it to within ±0.5 g by using a balance (if one is available). Record the volume or weight of liquid present. This information is required to calculate the moisture content of the effluent gas.

Discard the liquid after measuring and recording the volume or weight, unless analysis of the impinger catch is required (see Note, Section 2.1.7).

If a different type of condenser is used, measure the amount of moisture condensed either volumetrically or gravimetrically.

Whenever possible, containers should be shipped in such a way that they remain upright at all times.

4.3 Analysis. Record the data required on a sheet such as the one shown in Figure 5-3. Handle each sample container as follows:

Container No. 1. Leave the contents in the shipping container or transfer the filter and any loose particulate from the sample container to a tared glass weighing dish. Desiccate for 24 hours in a desiccator containing anhydrous calcium sulfate. Weigh to a constant weight and report the results to the nearest 0.1 mg. For purposes of this Section, 4.3, the term "constant weight" means a difference of no more than 0.5 mg or 1 percent of total weight less tare weight, whichever is greater, between two consecutive weighings, with no less than 6 hours of desiccation time between weighings.

Plant _____

Date _____

Run No. _____

Filter No. _____

Amount liquid lost during transport _____

Acetone blank volume, ml _____

Acetone wash volume, ml _____

Acetone blank concentration, mg/mg (equation 5-4) _____

Acetone wash blank, mg (equation 5-5) _____

CONTAINER NUMBER	WEIGHT OF PARTICULATE COLLECTED, mg		
	FINAL WEIGHT	TARE WEIGHT	WEIGHT GAIN
1			
2			
TOTAL			
		Less acetone blank	
		Weight of particulate matter	

	VOLUME OF LIQUID WATER COLLECTED		
	IMPINGER VOLUME, ml.	SILICA GEL WEIGHT, g	
FINAL			
INITIAL			
LIQUID COLLECTED			
TOTAL VOLUME COLLECTED		g*	ml

* CONVERT WEIGHT OF WATER TO VOLUME BY DIVIDING TOTAL WEIGHT INCREASE BY DENSITY OF WATER (1g/ml).

$$\frac{\text{INCREASE, g}}{\text{1 g/ml}} = \text{VOLUME WATER, ml}$$

Figure 5-3. Analytical data.

Alternatively, the sample may be oven dried at 105° C (220° F) for 2 to 3 hours, cooled in the desiccator, and weighed to a constant weight, unless otherwise specified by the Administrator. The tester may also opt to oven dry the sample at 105° C (220° F) for 2 to 3 hours, weigh the sample, and use this weight as a final weight.

Container No. 8. Note the level of liquid in the container and confirm on the analysis sheet whether or not leakage occurred during transport. If a noticeable amount of leakage has occurred, either void the sample or use methods, subject to the approval of the Administrator, to correct the final results. Measure the liquid in this container either volumetrically to ±1 ml or gravimetrically to ±0.5 g. Transfer the contents to a tared 250-ml beaker and evaporate to dryness at ambient temperature and pressure. Desiccate for 24 hours and weigh to a constant weight. Report the results to the nearest 0.1 mg.

Container No. 9. Weigh the spent silica gel (or silica gel plus impinger) to the nearest 0.5 g using a balance. This step may be conducted in the field.

"Acetone Blank" Container. Measure acetone in this container either volumetrically or gravimetrically. Transfer the acetone to a tared 250-ml beaker and evaporate to dryness at ambient temperature and pressure. Desiccate for 24 hours and weigh to a constant weight. Report the results to the nearest 0.1 mg.

NOTE.—At the option of the tester, the contents of Container No. 2 as well as the acetone blank container may be evaporated at temperatures higher than ambient. If evaporation is done at an elevated temperature, the temperature must be below the boiling point of the solvent; also, to prevent "bumping," the evaporation process must be closely supervised, and the contents of the beaker must be swirled occasionally to maintain an even temperature. Use extreme care, as acetone is highly flammable and has a low flash point.

5. *Calibration*

Maintain a laboratory log of all calibrations.

5.1 Probe Nozzle. Probe nozzles shall be calibrated before their initial use in the field. Using a micrometer, measure the inside diameter of the nozzle to the nearest 0.025 mm (0.001 in.). Make three separate measurements using different diameters each time, and obtain the average of the measurements. The difference between the high and low numbers shall not exceed 0.1 mm (0.004 in.). When nozzles become nicked, dented, or corroded, they shall be reshaped, sharpened, and recalibrated before use. Each nozzle shall be permanently and uniquely identified.

5.2 Pitot Tube. The Type S pitot tube assembly shall be calibrated according to the procedure outlined in Section 4 of Method 2.

5.3 Metering System. Before its initial use in the field, the metering system shall be calibrated according to the procedure outlined in APTD-0576. Instead of physically adjusting the dry gas meter dial readings to correspond to the wet test meter readings, calibration factors may be used to mathematically correct the gas meter dial readings to the proper values. Before calibrating the metering system, it is suggested that a leak-check be conducted. For metering systems having diaphragm pumps, the normal leak-check procedure will not detect leakages within the pump. For these cases the following leak-check procedure is suggested: make a 10-minute calibration run at 0.00057 m^3/min (0.02 cfm); at the end of the run, take the difference of the measured wet test meter and dry gas meter volumes; divide the difference by 10, to get the leak rate. The leak rate should not exceed 0.00057 m^3/min (0.02 cfm).

After each field use, the calibration of the metering system shall be checked by performing three calibration runs at a single, intermediate orifice setting (based on the previous field test), with the vacuum set at the maximum value reached during the test series. To adjust the vacuum, insert a valve between the wet test meter and the inlet of the metering system. Calculate the average value of the calibration factor. If the calibration has changed by more than 5 percent, recalibrate the meter over the full range of orifice settings, as outlined in APTD-0576.

Alternative procedures, e.g. using the orifice meter coefficients, may be used, subject to the approval of the Administrator.

NOTE.—If the dry gas meter coefficient values obtained before and after a test series differ by more than 5 percent, the test series shall either be voided, or calculations for the test series shall be performed using whichever meter coefficient value (i.e., before or after) gives the lower value of total sample volume.

5.4 Probe Heater Calibration. The probe heating system shall be calibrated before its initial use in the field according to the procedure outlined in APTD-0576. Probes constructed according to APTD-0581 need not be calibrated if the calibration curves in APTD-0576 are used.

5.5 Temperature Gauges. Use the procedure in Section 4.3 of Method 2 to calibrate in-stack temperature gauges. Dial thermometers, such as are used for the dry gas meter and condenser outlet, shall be calibrated against mercury-in-glass thermometers.

5.6 Leak Check of Metering System Shown in Figure 5-1. That portion of the sampling train from the pump to the orifice meter should be leak checked prior to initial use and after each shipment. Leakage after the pump will result in less volume being recorded than is actually sampled. The following procedure is suggested (see Figure 5-4): Close the main valve on the meter box. Insert a one-hole rubber stopper with rubber tubing attached into the orifice exhaust pipe. Disconnect and vent the low side of the orifice manometer. Close off the low side orifice tap. Pressurize the system to 13 to 18 cm (5 to 7 in.) water column by blowing into the rubber tubing. Pinch off the tubing and observe the manometer for one minute. A loss of pressure on the manometer indicates a leak in the meter box; leaks, if present, must be corrected.

5.7 Barometer. Calibrate against a mercury barometer.

6. *Calculations*

Carry out calculations, retaining at least one extra decimal figure beyond that of the acquired data. Round off figures after the final calculation. Other forms of the equations may be used as long as they give equivalent results.

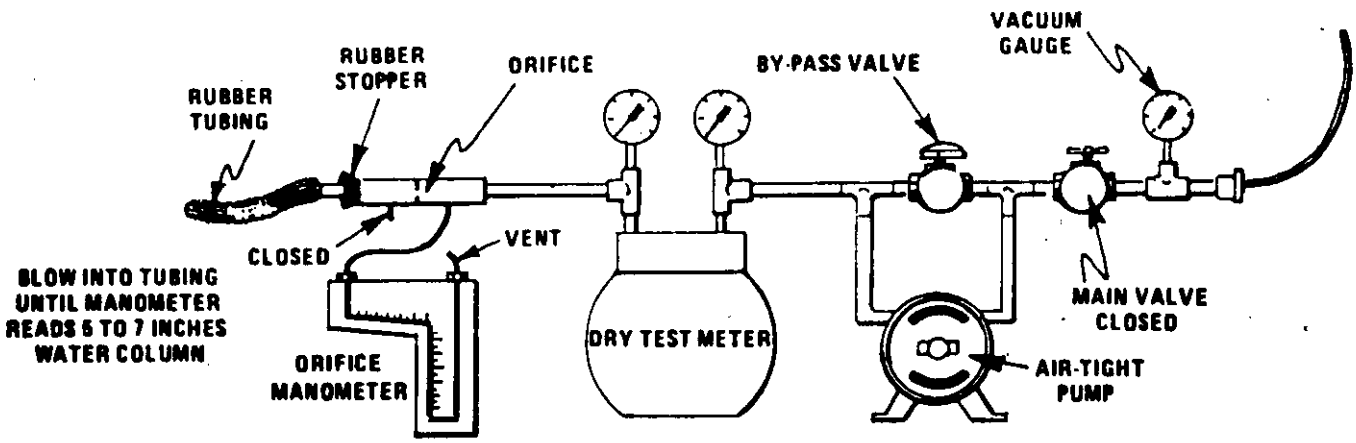

Figure 5-4. Leak check of meter box.

6.1 Nomenclature

A_n = Cross-sectional area of nozzle, m^2 (ft^2).
B_{ws} = Water vapor in the gas stream, proportion by volume.
C_a = Acetone blank residue concentrations, mg/g.
c_s = Concentration of particulate matter in stack gas, dry basis, corrected to standard conditions, g/dscm (g/dscf).
I = Percent of isokinetic sampling.
L_a = Maximum acceptable leakage rate for either a pretest leak check or for a leak check following a component change; equal to 0.00057 m^3/min (0.02 cfm) or 4 percent of the average sampling rate, whichever is less.
L_i = Individual leakage rate observed during the leak check conducted prior to the "i^{th}" component change (i=1, 2, 3 . . . n), m^3/min (cfm).
L_p = Leakage rate observed during the post-test leak check, m^3/min (cfm).
m_a = Total amount of particulate matter collected, mg.
M_w = Molecular weight of water, 18.0 g/g-mole (18.0 lb/lb-mole).
m_a = Mass of residue of acetone after evaporation, mg.
P_{bar} = Barometric pressure at the sampling site, mm Hg (in. Hg).
P_s = Absolute stack gas pressure, mm Hg (in. Hg).
P_{std} = Standard absolute pressure, 760 mm Hg (29.92 in. Hg).
R = Ideal gas constant, 0.06236 mm Hg-m^3/°K-g-mole (21.85 in. Hg-ft^3/°R-lb-mole).
T_m = Absolute average dry gas meter temperature (see Figure 5-2), °K (°R).
T_s = Absolute average stack gas temperature (see Figure 5-2), °K (°R).
T_{std} = Standard absolute temperature, 293° K (528° R).
V_a = Volume of acetone blank, ml.
V_{aw} = Volume of acetone used in wash, ml.
V_{lc} = Total volume of liquid collected in impingers and silica gel (see Figure 5-3), ml.
V_m = Volume of gas sample as measured by dry gas meter, dcm (dcf).
$V_{m(std)}$ = Volume of gas sample measured by the dry gas meter, corrected to standard conditions, dscm (dscf).
$V_{w(std)}$ = Volume of water vapor in the gas sample, corrected to standard conditions, scm (scf).
V_s = Stack gas velocity, calculated by Method 2, Equation 2-9, using data obtained from Method 5, m/sec (ft/sec).
W_a = Weight of residue in acetone wash, mg.
Y = Dry gas meter calibration factor.
ΔH = Average pressure differential across the orifice meter (see Figure 5-2), mm H_2O (in. H_2O).
ρ_a = Density of acetone, mg/ml (see label on bottle).
ρ_w = Density of water, 0.9982 g/ml (0.00220 lb/ml).
θ = Total sampling time, min.
θ_i = Sampling time interval, from the beginning of a run until the first component change, min.
θ_n = Sampling time interval, between two successive component changes, beginning with the interval between the first and second changes, min.
θ_p = Sampling time interval, from the final (n^{th}) component change until the end of the sampling run, min.
13.6 = Specific gravity of mercury.
60 = Sec/min.
100 = Conversion to percent.

6.2 Average dry gas meter temperature and average orifice pressure drop. See data sheet (Figure 5-2).

6.3 Dry Gas Volume. Correct the sample volume measured by the dry gas meter to standard conditions (20° C, 760 mm Hg or 68° F, 29.92 in. Hg) by using Equation 5-1.

$$V_{m(std)} = V_m Y \left(\frac{T_{std}}{T_m}\right)\left[\frac{P_{bar} + \frac{\Delta H}{13.6}}{P_{std}}\right]$$

$$= K_1 V_m Y \frac{P_{bar} + (\Delta H/13.6)}{T_m}$$

Equation 5-1

where:
m_1=0.3858 °K/mm Hg for metric units
=17.64 °R/in. Hg for English units

NOTE.—Equation 5-1 can be used as written unless the leakage rate observed during any of the mandatory leak checks (i.e., the post-test leak check or leak checks conducted prior to component changes) exceeds L_a. If L_p or L_i exceeds L_a, Equation 5-1 must be modified as follows:

(a) Case I. No component changes made during sampling run. In this case, replace V_m in Equation 5-1 with the expression:

$$V_m - (L_p - L_a)\theta]$$

(b) Case II. One or more component changes made during the sampling run. In this case, replace V_m in Equation 5-1 by the expression:

$$\left[V_m - (L_1 - L_a)\theta_1 - \sum_{i=2}^{n} (L_i - L_a)\theta_i - (L_p - L_a)\theta_p\right]$$

and substitute only for those leakage rates (L_i or L_p) which exceed L_a.

6.4 Volume of water vapor.

$$V_{w(std)} = V_{1c}\left(\frac{\rho_w}{M_w}\right)\left(\frac{RT_{std}}{P_{std}}\right) = K_2 V_{1c}$$

Equation 5-2

where:
K_2=0.001333 m³/ml for metric units
=0.04707 ft³/ml for English units.

6.5 Moisture Content.

$$B_{ws} = \frac{V_{w(std)}}{V_{m(std)} + V_{w(std)}}$$

Equation 5-3

NOTE.—In saturated or water droplet-laden gas streams, two calculations of the moisture content of the stack gas shall be made, one from the impinger analysis (Equation 5-3), and a second from the assumption of saturated conditions. The lower of the two values of B_{ws} shall be considered correct. The procedure for determining the moisture content based upon assumption of saturated conditions is given in the Note of Section 1.2 of Method 4. For the purposes of this method, the average stack gas temperature from Figure 5-2 may be used to make this determination, provided that the accuracy of the in-stack temperature sensor is ± 1° C (2° F).

6.6 Acetone Blank Concentration.

$$C_a = \frac{m_a}{V_a \rho_a}$$

Equation 5-4

6.7 Acetone Wash Blank.

$$W_a = C_a V_{aw} \rho_a$$

Equation 5-5

6.8 Total Particulate Weight. Determine the total particulate catch from the sum of the weights obtained from containers 1 and 2 less the acetone blank (see Figure 5-3). NOTE.—Refer to Section 4.1.5 to assist in calculation of results involving two or more filter assemblies or two or more sampling trains.

6.9 Particulate Concentration.

$$c_s = (0.001\ g/mg)\ (m_n/V_{m(std)})$$

Equation 5-6

6.10 Conversion Factors:

From	To	Multiply by
scf	m³	0.02832
gr/ft³	gr/ft³	15.43
g/ft³	lb/ft³	2.205×10^{-3}
g/ft³	g/m³	35.31

6.11 Isokinetic Variation.

6.11.1 Calculation From Raw Data.

$$I = \frac{100\, T_s[K_3 V_{1c} + (V_m/T_m)(P_{bar} + \Delta H/13.6)]}{60\,\theta v_s P_s A_n}$$

Equation 5-7

where:
K_3=0.003454 mm Hg-m³/ml-°K for metric units.
=0.002669 in. Hg-ft³/ml-°R for English units.

6.11.2 Calculation From Intermediate Values.

$$I = \frac{T_s V_{m(std)} P_{std}\, 100}{T_{std} v_s \theta A_n P_s\, 60(1 - B_{ws})}$$

$$= K_4 \frac{T_s V_{m(std)}}{P_s V_s A_n \theta (1 - B_{ws})}$$

Equation 5-8

where:
K_4=4.320 for metric units
=0.09450 for English units.

6.12 Acceptable Results. If 90 percent $\leq I \leq$ 110 percent, the results are acceptable. If the results are low in comparison to the standard and I is beyond the acceptable range, or, if I is less than 90 percent, the Administrator may opt to accept the results. Use Citation 4 to make judgments. Otherwise, reject the results and repeat the test.

7. *Bibliography*

1. Addendum to Specifications for Incinerator Testing at Federal Facilities. PHS, NCAPC, Dec. 6, 1967.
2. Martin, Robert M. Construction Details of Isokinetic Source-Sampling Equipment. Environmental Protection Agency. Research Triangle Park, N.C. APTD-0581. April, 1971.
3. Rom, Jerome J. Maintenance, Calibration, and Operation of Isokinetic Source Sampling Equipment. Environmental Protection Agency. Research Triangle Park, N.C. APTD-0576. March, 1972.
4. Smith, W. S., R. T. Shigehara, and W. F. Todd. A Method of Interpreting Stack Sampling Data. Paper Presented at the 63d Annual Meeting of the Air Pollution Control Association, St. Louis, Mo. June 14-19, 1970.
5. Smith, W. S., et al. Stack Gas Sampling Improved and Simplified With New Equipment. APCA Paper No. 67-119. 1967.
6. Specifications for Incinerator Testing at Federal Facilities. PHS, NCAPC. 1967.
7. Shigehara, R. T. Adjustments in the EPA Nomograph for Different Pitot Tube Coefficients and Dry Molecular Weights. Stack Sampling News 2:4-11. October, 1974.
8. Vollaro, R. F. A Survey of Commercially Available Instrumentation For the Measurement of Low-Range Gas Velocities. U.S. Environmental Protection Agency, Emission Measurement Branch. Research Triangle Park, N.C. November, 1976 (unpublished paper).
9. Annual Book of ASTM Standards, Part 26. Gaseous Fuels, Coal and Coke; Atmospheric Analysis. American Society for Testing and Materials. Philadelphia, Pa. 1974. pp. 617-622.

METHOD 6—DETERMINATION OF SULFUR DIOXIDE EMISSIONS FROM STATIONARY SOURCES

1. *Principle and Applicability*

1.1 Principle. A gas sample is extracted from the sampling point in the stack. The sulfuric acid mist (including sulfur trioxide) and the sulfur dioxide are separated. The sulfur dioxide fraction is measured by the barium-thorin titration method.

1.2 Applicability. This method is applicable for the determination of sulfur dioxide emissions from stationary sources. The minimum detectable limit of the method has been determined to be 3.4 milligrams (mg) of SO_2/m³ (2.12×10^{-7} lb/ft³). Although no upper limit has been established, tests have shown that concentrations as high as 80,000 mg/m³ of SO_2 can be collected efficiently in two midget impingers, each containing 15 milliliters of 3 percent hydrogen peroxide, at a rate of 1.0 lpm for 20 minutes. Based on theoretical calculations, the upper concentration limit in a 20-liter sample is about 93,300 mg/m³.

Possible interferents are free ammonia, water-soluble cations, and fluorides. The cations and fluorides are removed by glass wool filters and an isopropanol bubbler, and hence do not affect the SO_2 analysis. When samples are being taken from a gas stream with high concentrations of very fine metallic fumes (such as in inlets to control devices), a high-efficiency glass fiber filter must be used in place of the glass wool plug (i.e., the one in the probe) to remove the cation interferents.

Free ammonia interferes by reacting with SO_2 to form particulate sulfite and by reacting with the indicator. If free ammonia is present (this can be determined by knowledge of the process and noticing white particulate matter in the probe and isopropanol bubbler), alternative methods, subject to the approval of the Administrator, U.S. Environmental Protection Agency, are required.

2. *Apparatus*

CALIBRATION INFORMATION

NOZZLES

Each new set of nozzles purchased by Pace are first machined and calibrated before being put into field use. Thereafter, whenever it becomes apparent that a nozzle has been damaged, it is again machined and recalibrated. A set of three is matched to within 0.002 inches (Difference between high and low readings). Nozzles are checked prior to each source test.

PITOT TUBES

All pitot tubes used by Pace whether separate or attached to a sampling probe were made by Pace personnel. Prior to being put into field use, they are calibrated. In general, if a type "S" pitot tube is constructed properly, and not positioned too closely to the probe nozzle or any other obstruction, it will have a Cp of 0.83 - 0.87. As long as the pitot tube is not damaged its calibration should not change. All Pace pitot tubes are made to have a Cp of 0.84. If a pitot tube does not initially have a Cp of 0.84, it is altered until a reading of 0.84 is obtained. Pitot tubes are checked before each source test and receive a complete calibration once a year.

DRY GAS METER AND ORIFICE METER

Complete meter box calibrations are performed annually. One point calibrations at the average orifice meter and maximum vacuum readings encountered during the compliance test are performed after each source test. If the dry gas meter calibration factor differs from 1.00 by more than +\- 0.02 then the dry gas meter is repaired and given an annual calibration.

THERMOMETERS, FYRITES, ORSAT AND ORSAT BAGS

Each new thermometer, pyrometer and thermocouple purchased or manufactured by Pace is checked and calibrated before being put into field use. After each source test each temperature sensing device used on the test receives a one point calibration check according to U.S. EPA guidelines.

Fyrites, orsat and orsat bags are checked before and after each source test. If they do not function according to U.S. EPA protocol that piece of equipment is either repaired or replaced.

LABORATORY EQUIPMENT

Pace has a written quality assurance document that covers calibration and maintenance of laboratory equipment. This includes calibration of the analytical balance against Class S weights, and service contracts to maintain traceability to N.B.S. Calibration of thermometers, barometers, stopwatches and wet test meters are traceable to N.B.S. A copy of our quality assurance document may be obtained by written request.

pace laboratories, inc

METHOD 5 PRETEST - POSTEST CALIBRATION CHECKS

Plant Indusmin, Inc · Spruce Pine NC Calibrated by JAB
Meter box number 1348 Date 12-27-89 / 01/05/90

Dry Gas Meter

Pretest meter calibration factor, Y = 1.00 (within ± 2%)
Postest meter calibration factor, Y = 1.012 (within ± 5% of pretest)
Recalibration required? Circle one: yes or (no) If yes new Y = —
Lower cal. factor, Y = — for calculations (pretest or postest)

Dry Gas Meter Thermometers

Was a pretest temperature correction used? Circle one: yes or (no) If yes temperature correction — (within ± 5.4°F over range)
Postest comparison with mercury-in-glass thermometer? (within ±10.8°F at ambient temperature) Recalibration required? Circle one: yes or (no)
Recalibration temperature correction? — (within ±5.4°F over range
If yes, no correction necessary for calculations if meter thermometer temperature is higher; if calibration temperature is higher, add correction to average meter temperature for calculations

Stack Temperature Sensor

Was a pretest temperature correction used? Circle one: yes or (no) If yes temperature correction — °F (within ±1.5% in °R over range)
Average stack temperature of compliance test, 504.42 °R
Temperature of ref. thermometer for recalibration #1 525 #2 505 °R
(within ± 10% of the average stack temperature)
Temperature of stack thermometer for recalibration #1 501 #2 503 °R
Diff. between ref. and stack thermometer temps. #1 4 #2 2 °R
Do the ref. and stack values agree within ±1.5%? Circle one: (yes) or no
If yes, no correction is necessary for calculations
If no, calculations must be done twice—once with the recorded values and once with the average stack temperature corrected to correspond to the reference temperature differential; both final result values must be reported since there is no way to determine which is correct

Barometer

Was the pretest field barometer reading correct? Circle one: (yes) or no
Postest comparison? 0.001 in. Hg (±0.1 in. Hg) Recalibration required? Circle one: yes or (no) If yes, no correction necessary for calculations when the field barometer has a lower reading; if the mercury-in-glass reading is lower, subtract the difference from the field data readings for the calculations.

	Pretest	Postest
Hg in glass	29.344	29.049
Field	29.345	29.100
Difference	.001	0.001

Nozzle

Was the nozzle calibrated to the nearest .001 in.? Circle one: (yes) or no

Nozzle #1:	0.252	0.252	0.251	0.251	0.252	: Average 0.252
Nozzle #2:	0.253	0.252	0.254	0.253	0.253	: Average 0.253
Nozzle #3:	0.251	0.249	0.251	0.249	0.250	: Average 0.250

Impinger Thermometer

Was a pretest temperature correction used? Circle one: yes or (no) If yes temperature correction — (within ±5.4°F over range)

POSTEST DRY GAS METER CALIBRATION DATA FORM (English Units)

Test Number 1 Date 01/05/90 Meter Box No. 1348 Plant Industsmin, Inc. Spruce Pine N.C.

Barometric Pressure, P_b= 29.349 in. Hg Dry Gas Meter No. 1348 Pretest Y 1.00

Orifice manometer setting, inches H_2O ΔH	Gas Volume: Wet test meter, ft³ V_w	Gas Volume: Dry gas meter, ft³ V_d	Temperature: Wet test meter, °F t_w	Temperature: Dry Gas Meter Inlet °F t_{d_i}	Temperature: Dry Gas Meter Outlet °F t_{d_o}	Temperature: Dry Gas Meter Average °F t_d	Time min. θ	Vacuum setting in. Hg	Y_i	Y_i $\frac{V_w P_b (t_d + 460)}{V_d (P_b + \frac{\Delta H}{13.6})(t_w + 460)}$
2.43	10	10.65	70.1	129	99	114		9.0	1.011	$\frac{10(29.349)(114+460)}{10.65(29.349+0.1787)(70.1+460)}$
2.43	10	10.64	70.1	127.5	100.5	115	12:25	9.0	1.013	$\frac{10(29.349)(115+460)}{10.64(29.349+0.1787)(70.1+460)}$
2.43	10	10.66	70.1	130	100.5	115.25	12:25	9.0	1.012	$\frac{10(29.349)(115.25+460)}{10.66(29.349+0.1784)(70.1+460)}$
										1.012

V_w = Gas volume passing through the wet test meter, ft.³

V_d = Gas volume passing throught the dry gas meter, ft.³

t_w = Temperature of the gas in the wet test meter, °F

t_{d_i} = Temperature of the inlet gas of the dry gas meter, °F

t_{d_o} = Temperature of the outlet gas of the dry gas meter, °F

t_d = Average temperature of the gas in the dry gas meter, obtained by the average of t_{d_i} and t_{d_o}, °F

ΔH = Pressure differential across orifice, in. H_2O

Y_i = Ratio of accuracy of wet test meter to dry gas meter for each run

Y = Average ratio of accuracy of wet test meter to dry gas meter for all three runs; tolerance = pretest Y ± 0.05Y

P_b = Barometric pressure, in. Hg

θ = Time of calibration run, min.

PACE Laboratories, Inc.

pace. laboratories, inc.

PRETEST - POSTEST THERMOMETER CALIBRATION

Client INDUSMIN, INC. Spruce Pine NC Date 12-27-89 + 01/05/90

Location Dust Collector Stack Ref. Thermometer #5

Thermometer	Pretest		Postest	
	Temp., °F	Ref. Temp., °F	Temp., °F	Ref. Temp., °F
DGM # 1348	72/72	72	72/72	72
DGM # 1965	72/71	72	72/71	72
DGM # —	—	—	—	—
DGM # —	—	—	—	
Impinger #1	71	72	71	72
Impinger #2	72	72	72	72
Impinger #3	72	72	72	72
Impinger #4	72	72	72	72
Impinger #5	72	72	72	72
WB # 1 & 2	72/72	72	72/72	72
DB # 1 & 2	71/72	72	71/72	72
Box #1	72	72	71	72
Box #2	72	72	71	72
Box #3	72	72	71	72
Box #4	72	72	72	72
Box #5	72	72	72	72
Box #6	72	72	72	72
WB Omega 873	72	72	72	72
DB Omega 873	72	72	72	72
WB Omega #1	72	72	72	72
DB Omega #1	71	72	72	72
Probe 6' #1	71	72	72	72
Probe 6' #2	72	72	72	72
Probe 4' #1	72	72	72	72
Probe 4' #2	71	72	72	72
	—	—	—	—

pace laboratories, inc.

RAC STAKSAMPLR CALIBRATION SHEET

Meter Box Serial Number: 1348 Barometric Pressure (P_b): 29.054

Leak Check @ 6.2 in. H_2O: OK Date: 10-02-89 Calibrated by: JAB

Pump: OK Pump Oil: OK Clean Quick Connects: OK

Manometers: OK Dry Test Meter: OK Thermometers: OK

Lights: OK Electrical Check: OK Variac: OK

Vacuum Gauge: OK Leak Check @ 27" Hg.: <0.001 CFM

Man. Orifice	CF_m	CF_d	T_m	IT_d	OT_d	T_d avg.	Time t
0.5	5	5.23	70.0	101.0	87.5	94.25	12.36
1.0	5	5.33	70.0	114.5	96.5	105.50	9.00
1.5	10	10.77	70.0	120.0	100.0	110.00	15.91
2.0	10	10.77	70.0	122.5	102.0	112.00	13.10
3.0	10	10.80	70.0	126.5	104.5	115.50	10.86
4.0	10	10.80	70.5	128.0	106.0	117.00	9.50

Calculate Y and $\Delta H_@$ as follows:

$$Y = \frac{CF_m P_b (T_{d\,avg.} + 460)}{CF_d (P_b + \Delta H/13.6)(T_m + 460)} = 1.00 \qquad \Delta H_@ = \frac{0.0317 \quad \Delta H}{P_b (T_d + 460)} \left(\frac{(T_m + 460)\, t}{CF_m}\right)^2 = 1.81$$

Tolerances: Y = 0.90 - 1.00 - 1.10 Y +/- 0.02Y $\Delta H_@$ = 1.6 - 1.84 - 2.1 $\Delta H_@$ +/- 0.15 in.

CALIBRATION CALCULATIONS PUMP AND ORIFICE METER

Manometer Delta H 0.5 in. H_2O

$$Y = \frac{5 \times 29.054\ (94.25 + 460)}{5.23\ (29.054 + 0.0368)(70.0 + 460)} = 0.998 \qquad \Delta H_@ = \frac{0.01585}{29.054\ (94.25 + 460)} \left(\frac{(70.0 + 460)\ 12.36}{5}\right)^2 = 1.545$$

Manometer Delta H 1.0 in. H_2O

$$Y = \frac{5 \times 29.054\ (105.50 + 460)}{5.33\ (29.054 + 0.0737)(70.0 + 460)} = 0.998 \qquad \Delta H_@ = \frac{0.03170}{29.054\ (105.50 + 460)} \left(\frac{(70.0 + 460)\ 9.00}{5}\right)^2 = 1.729$$

Manometer Delta H 1.5 in. H_2O

$$Y = \frac{10 \times 29.054\ (110.00 + 460)}{10.77\ (29.054 + 0.1103)(70.0 + 460)} = 0.995 \qquad \Delta H_@ = \frac{0.04755}{29.054\ (110.00 + 460)} \left(\frac{(70.0 + 460)\ 15.91}{10}\right)^2 = 1.991$$

Manometer Delta H 2.0 in. H_2O

$$Y = \frac{10 \times 29.054\ (112.00 + 460)}{10.77\ (29.054 + 0.1471)(70.0 + 460)} = 0.995 \qquad \Delta H_@ = \frac{0.06340}{29.054\ (112.00 + 460)} \left(\frac{(70.0 + 460)\ 13.10}{10}\right)^2 = 1.831$$

Manometer Delta H 3.0 in. H_2O

$$Y = \frac{10 \times 29.054\ (115.50 + 460)}{10.80\ (29.054 + 0.2206)(70.0 + 460)} = 0.999 \qquad \Delta H_@ = \frac{0.09510}{29.054\ (115.50 + 460)} \left(\frac{(70.0 + 460)\ 10.86}{10}\right)^2 = 1.855$$

Manometer Delta H 4.0 in. H_2O

$$Y = \frac{10 \times 29.054\ (117.00 + 460)}{10.80\ (29.054 + 0.2941)(70.5 + 460)} = 0.997 \qquad \Delta H_@ = \frac{0.12680}{29.054\ (117.00 + 460)} \left(\frac{(70.5 + 460)\ 9.50}{10}\right)^2 = 1.904$$

pace, laboratories, inc

TYPE S PITOT TUBE INSPECTION DATA FORM

Date: 07-24-89
Calibrator: WQB

Specifications:
1.) Pitot tube assembly must be level.
2.) If pitot tube is damaged explain under comments section.
3.) $z = A \sin \tau$ (<0.125) and $w = A \sin \theta$ (<0.03125)
4.) α <10° and β <5°

I.D.	α_1°	α_2°	β_1°	β_2°	τ°	θ°	A, in.	z, in.	w, in.	P_A, in.	P_B, in.	D_t, in.
36''- 1	1.0	1.5	1.0	1.5	2.0	0.5	0.730	0.025	0.00640	0.365	0.365	0.376
36''- 2	2.0	2.0	2.0	1.5	0.0	0.5	1.152	0.000	0.01005	0.576	0.576	0.376
40''- 1	1.0	0.0	1.0	0.0	0.5	0.5	1.112	0.010	0.00970	0.556	0.556	0.385
54''- 1	1.0	0.5	0.5	1.0	1.0	1.5	0.960	0.017	0.02513	0.480	0.480	0.385
66''- 1	1.0	0.0	3.0	2.0	0.5	1.5	1.042	0.009	0.02728	0.521	0.521	0.375
96''- 1	0.0	2.0	2.0	1.5	2.0	1.5	0.902	0.032	0.02361	0.451	0.451	0.380
3' - 1	0.0	0.0	0.0	0.0	0.0	1.0	1.057	0.000	0.01845	0.528	0.529	0.376
3' - 2	0.5	0.5	0.0	0.5	0.5	0.0	1.044	0.009	0.00000	0.522	0.522	0.375
3' - 3	0.5	0.5	1.0	0.5	0.5	1.0	1.044	0.009	0.01822	0.522	0.522	0.378
4' - 1	0.5	0.5	0.5	2.0	0.5	1.0	0.950	0.008	0.01658	0.475	0.475	0.378
4' - 2	0.0	0.5	0.0	1.5	1.0	0.5	0.889	0.016	0.00776	0.444	0.445	0.376
4' - 3	3.5	2.5	1.0	1.5	0.5	1.5	0.875	0.008	0.02290	0.437	0.438	0.376
4' - 4	0.5	3.5	2.5	1.5	0.5	1.0	0.837	0.007	0.01461	0.419	0.418	0.375
4' - 5	0.5	1.0	1.5	0.0	0.0	1.5	0.861	0.000	0.02254	0.431	0.430	0.374
4' - 6	0.5	0.0	0.5	0.5	1.0	1.5	0.947	0.017	0.02479	0.474	0.473	0.379
5' - 1	1.0	1.0	1.0	2.0	2.0	0.5	1.044	0.036	0.00911	0.522	0.522	0.373
5' - 2	0.5	1.0	1.0	1.5	0.5	0.5	1.046	0.009	0.00913	0.523	0.523	0.373
5' - 3	0.5	1.0	0.5	0.5	0.5	1.5	1.045	0.009	0.02736	0.523	0.522	0.376
5' - 4	3.0	0.5	0.0	0.5	2.5	1.0	1.027	0.045	0.01792	0.513	0.514	0.376
6' - 1	0.0	1.0	0.0	0.5	1.0	1.0	0.993	0.017	0.01745	0.496	0.497	0.376
6' - 2	0.5	0.0	0.0	0.5	2.0	1.0	1.008	0.035	0.01759	0.504	0.504	0.376
6' - 3	0.5	0.5	1.5	0.5	1.0	1.5	1.004	0.018	0.02628	0.502	0.502	0.377
6' - 4	1.0	0.5	1.0	0.0	2.0	1.0	1.000	0.035	0.01745	0.500	0.500	0.375
8' - 1	1.0	0.0	1.5	2.0	3.0	0.5	0.841	0.044	0.00734	0.420	0.421	0.378
8' - 2	1.0	0.0	2.5	3.0	2.0	2.0	0.871	0.030	0.03039	0.435	0.436	0.373
8' - 3	1.0	0.0	4.0	1.0	0.0	1.5	0.905	0.000	0.02369	0.452	0.453	0.374
8' - 4	2.0	2.0	0.0	0.0	0.0	0.0	1.007	0.000	0.00000	0.504	0.503	0.378
8' - 5	0.0	2.0	0.0	0.0	2.0	1.0	0.965	0.034	0.01684	0.482	0.483	0.380
8' - 6	0.5	2.0	0.5	2.0	1.0	0.0	0.917	0.016	0.00000	0.458	0.459	0.383
8'9''	1.0	2.0	1.5	1.5	1.0	2.0	0.895	0.016	0.03124	0.447	0.448	0.380
9'7''-1	0.0	1.0	0.0	1.0	0.0	0.5	0.905	0.000	0.00790	0.452	0.453	0.377
9'7''-2	0.0	1.0	3.0	2.0	3.0	1.5	0.951	0.050	0.02489	0.475	0.476	0.377
12'6''	1.5	1.5	2.5	2.5	0.0	0.5	0.809	0.000	0.00705	0.404	0.404	0.377

Comments: Only minor filing and cleaning required.

Pitot tubes requiring further calibration: None.

pace, laboratories, inc.

IMPINGER
TEMPERATURE SENSOR CALIBRATION DATA FORM
TOLERANCE: +/- 2.0 F

DATE: 07/25/89
AMBIENT TEMPERATURE, F : 72
CALIBRATOR: WQB

BAROMETRIC PRESSURE: 29.419
REFERENCE THERMOMETER # 22 & #5

REFERENCE POINT #		SOURCE	REFERENCE THERMOMETER TEMPERATURE,F	THERMOCOUPLE POTENTIOMETER TEMPERATURE,F	TEMPERATURE DIFFERENCE, %
Impinger					
#1	A.	ice bath	32	32	0.00
	B.	water bath	70	70	0.00
	C.	water bath	95	95	0.00
	D.	water bath	130	130	0.00
#2	A.	ice bath	32	32	0.00
	B.	water bath	70	71	-.19
	C.	water bath	95	95	0.00
	D.	water bath	130	130	0.00
#3	A.	ice bath	32	33	-.20
	B.	water bath	70	70	0.00
	C.	water bath	95	95	0.00
	D.	water bath	130	130	0.00
#4	A.	ice bath	32	33	-.20
	B.	water bath	70	71	-.19
	C.	water bath	95	95	0.00
	D.	water bath	130	131	-.17
#5	A.	ice bath	32	33	-.20
	B.	water bath	71	70	0.19
	C.	water bath	95	95	0.00
	D.	water bath	130	130	0.00

$$\text{TEMPERATURE DIFFERENCE} = \frac{(\text{REF TEMP, F} + 460) - (\text{TEST TEMP, F} + 460)}{\text{REF TEMP, F} + 460} \times 100 <= 1.5\%$$

pace laboratories, inc.

SAMPLE BOX
TEMPERATURE SENSOR CALIBRATION DATA FORM
TOLERANCE: +/- 5.4 F

DATE: 07/25/89
AMBIENT TEMPERATURE, F : 72
CALIBRATOR: WQB

BAROMETRIC PRESSURE: 29.419
REFERENCE THERMOMETER # 22 & #5

REFERENCE POINT #		SOURCE	REFERENCE THERMOMETER TEMPERATURE, F	THERMOCOUPLE POTENTIOMETER TEMPERATURE, F	TEMPERATURE DIFFERENCE, %
Sample Box					
#1	A.	oil bath	122	121	0.17
	B.	oil bath	200	200	0.00
	C.	oil bath	220	220	0.00
	D.	oil bath	260	260	0.00
	E.	oil bath	287	288	-.13
#2	A.	oil bath	122	122	0.00
	B.	oil bath	200	202	-.30
	C.	oil bath	220	219	0.15
	D.	oil bath	260	260	0.00
	E.	oil bath	287	285	0.27
#3	A.	oil bath	122	121	0.17
	B.	oil bath	200	201	-.15
	C.	oil bath	220	220	0.00
	D.	oil bath	264	265	-.14
	E.	oil bath	289	289	0.00
#4	A.	oil bath	122	123	-.17
	B.	oil bath	200	201	-.15
	C.	oil bath	220	219	0.15
	D.	oil bath	264	264	0.00
	E.	oil bath	290	291	-.13
#5	A.	oil bath	123	123	0.00
	B.	oil bath	200	199	0.15
	C.	oil bath	220	221	-.15
	D.	oil bath	268	268	0.00
	E.	oil bath	291	291	0.00
#6	A.	oil bath	123	124	-.17
	B.	oil bath	200	199	0.15
	C.	oil bath	223	221	0.29
	D.	oil bath	268	266	0.27
	E.	oil bath	291	292	-.13
#7	A.	oil bath	123	124	-.17
	B.	oil bath	200	198	0.30
	C.	oil bath	234	232	0.29
	D.	oil bath	273	275	-.27
	E.	oil bath	294	295	-.13
#8	A.	oil bath	124	124	0.00
	B.	oil bath	200	201	-.15
	C.	oil bath	234	233	0.14
	D.	oil bath	274	275	-.14
	E.	oil bath	296	297	-.13

$$\text{TEMPERATURE DIFFERENCE} = \frac{(\text{REF TEMP, F} + 460) - (\text{TEST TEMP, F} + 460)}{\text{REF TEMP, F} + 460} \times 100 <= 1.5\%$$

pace laboratories, inc.

PROBE THERMOCOUPLE
TEMPERATURE SENSOR CALIBRATION DATA FORM
TOLERANCE: +/- 5.4 F

DATE: 07/25/89
AMBIENT TEMPERATURE, F : 72
CALIBRATOR: WQB

BAROMETRIC PRESSURE: 29.419
REFERENCE THERMOMETER #22 & #5

REFERENCE POINT #		SOURCE	REFERENCE THERMOMETER TEMPERATURE,F	THERMOCOUPLE POTENTIOMETER TEMPERATURE,F	TEMPERATURE DIFFERENCE, %
Probe - #					
4'-1	A.	oil bath	92	92	0.00
	B.	oil bath	242	242	0.00
	C.	oil bath	383	385	-.24
4'-2	A.	oil bath	92	92	0.00
	B.	oil bath	242	243	-.14
	C.	oil bath	384	385	-.12
5'-1	A.	oil bath	95	93	0.36
	B.	oil bath	242	243	-.14
	C.	oil bath	392	395	-.35
5'-2	A.	oil bath	97	96	0.18
	B.	oil bath	242	242	0.00
	C.	oil bath	384	385	-.12
6'-1	A.	oil bath	98	97	0.18
	B.	oil bath	242	243	-.14
	C.	oil bath	391	392	-.12
6'-2	A.	oil bath	98	96	0.36
	B.	oil bath	244	246	-.28
	C.	oil bath	385	386	-.12
8'-1	A.	oil bath	100	98	0.36
	B.	oil bath	246	248	-.28
	C.	oil bath	385	385	0.00
8'-2	A.	oil bath	100	99	0.18
	B.	oil bath	246	246	0.00
	C.	oil bath	385	385	0.00
8'-3	A.	oil bath	100	98	0.36
	B.	oil bath	246	248	-.28
	C.	oil bath	385	385	0.00
8' 9"	A.	oil bath	102	101	0.18
	B.	oil bath	247	249	-.28
	C.	oil bath	386	386	0.00
9' 7"	A.	oil bath	102	101	0.18
	B.	oil bath	248	249	-.14
	C.	oil bath	391	392	-.12

$$\text{TEMPERATURE DIFFERENCE} = \frac{(\text{REF TEMP, F} + 460) - (\text{TEST TEMP, F} + 460)}{\text{REF TEMP, F} + 460} \times 100 <= 1.5\%$$

pace. laboratories, inc

METER BOX
TEMPERATURE SENSOR CALIBRATION DATA FORM
TOLERANCE: +/- 5.4 F

DATE: 07/25/89
AMBIENT TEMPERATURE, F : 72
CALIBRATOR: WQB

BAROMETRIC PRESSURE: 29.419
REFERENCE THERMOMETER # 22 & #5

REFERENCE POINT #		SOURCE	REFERENCE THERMOMETER TEMPERATURE,F	THERMOCOUPLE POTENTIOMETER TEMPERATURE,F	TEMPERATURE DIFFERENCE, %
Meter Box					
1264A	A.	ice bath	35	36	-.20
	B.	water bath	70	69	0.19
	C.	oil bath	122	120	0.34
	D.	oil bath	170	169	0.16
1264B	A.	ice bath	35	36	-.20
	B.	water bath	70	70	0.00
	C.	oil bath	123	124	-.17
	D.	oil bath	171	172	-.16
1348A	A.	ice bath	35	33	0.40
	B.	water bath	70	70	0.00
	C.	oil bath	125	127	-.34
	D.	oil bath	171	171	0.00
1348B	A.	ice bath	35	36	-.20
	B.	water bath	70	70	0.00
	C.	oil bath	126	128	-.34
	D.	oil bath	171	170	0.16
1401A	A.	ice bath	35	36	-.20
	B.	water bath	70	70	0.00
	C.	oil bath	128	128	0.00
	D.	oil bath	172	174	-.32
1401B	A.	ice bath	35	34	0.20
	B.	water bath	70	71	-.19
	C.	oil bath	129	131	-.34
	D.	oil bath	172	172	0.00
1965A	A.	ice bath	35	34	0.20
	B.	water bath	70	69	0.19
	C.	oil bath	130	130	0.00
	D.	oil bath	172	174	-.32
1965B	A.	ice bath	35	35	0.00
	B.	water bath	70	70	0.00
	C.	oil bath	134	136	-.34
	D.	oil bath	172	173	-.16

$$\text{TEMPERATURE DIFFERENCE} = \frac{(\text{REF TEMP, F} + 460) - (\text{TEST TEMP, F} + 460)}{\text{REF TEMP, F} + 460} \times 100 <= 1.5\%$$

pace. laboratories, inc.

WET - BULB & DRY - BULB: OMEGA TEMP
TEMPERATURE SENSOR CALIBRATION DATA FORM
TOLERANCE: +/- 5.4 F

DATE: 07/25/89
AMBIENT TEMPERATURE, F : 72
CALIBRATOR: WQB

BAROMETRIC PRESSURE: 29.419
REFERENCE THERMOMETER # 22 & #5

REFERENCE POINT #		SOURCE	REFERENCE THERMOMETER TEMPERATURE, F	THERMOCOUPLE POTENTIOMETER TEMPERATURE, F	TEMPERATURE DIFFERENCE, %
Omega Temp HH-2 #1					
Db1	A.	water bath	70	71	-.19
	B.	oil bath	120	120	0.00
	C.	oil bath	170	171	-.16
	D.	oil bath	220	221	-.15
	E.	oil bath	260	259	0.14
Wb1	A.	water bath	70	70	0.00
	B.	oil bath	120	121	-.17
	C.	oil bath	170	171	-.16
	D.	oil bath	220	219	0.15
	E.	oil bath	260	261	-.14
Omega Temp HH-2 #2					
Db2	A.	water bath	70	71	-.19
	B.	oil bath	120	121	-.17
	C.	oil bath	171	172	-.16
	D.	oil bath	221	222	-.15
	E.	oil bath	262	262	0.00
Wb2	A.	water bath	70	69	0.19
	B.	oil bath	121	122	-.17
	C.	oil bath	171	170	0.16
	D.	oil bath	222	222	0.00
	E.	oil bath	262	261	0.14
Omega Temp 873-F					
Db1	A.	water bath	71	71	0.00
	B.	oil bath	121	122	-.17
	C.	oil bath	173	173	0.00
	D.	oil bath	222	223	-.15
	E.	oil bath	262	263	-.14
Wb1	A.	water bath	72	71	0.19
	B.	oil bath	122	121	0.17
	C.	oil bath	173	174	-.16
	D.	oil bath	222	222	0.00
	E.	oil bath	262	261	0.14
Omega Temp 873-F High Temp					
	A.	oil bath	384	385	-.12
	B.	m. furnace	450	452	-.22
	C.	m. furnace	575	573	0.19
	D.	m. furnace	800	803	-.24
	E.	m. furnace	1140	1143	-.19

$$\text{TEMPERATURE DIFFERENCE} = \frac{(\text{REF TEMP, F} + 460) - (\text{TEST TEMP, F} + 460)}{\text{REF TEMP, F} + 460} \times 100 <= 1.5\%$$

pace laboratories, inc. WET BULB - DRY BULB - NOx & HOT BOX: BIMETALLIC
TEMPERATURE SENSOR CALIBRATION DATA FORM
TOLERANCE: +/- 5.4 F

DATE: 07/25/89
AMBIENT TEMPERATURE, F : 72
CALIBRATOR: WQB

BAROMETRIC PRESSURE: 29.419
REFERENCE THERMOMETER # 22 & #5

REFERENCE POINT #		SOURCE	REFERENCE THERMOMETER TEMPERATURE, F	THERMOCOUPLE POTENTIOMETER TEMPERATURE, F	TEMPERATURE DIFFERENCE, %
Bimetallic					
Wb1	A.	water bath	72	72	0.00
	B.	oil bath	130	130	0.00
	C.	oil bath	185	184	0.16
	D.	oil bath	242	243	-.14
	E.	oil bath	270	272	-.27
Db1	A.	water bath	72	71	0.19
	B.	oil bath	131	130	0.17
	C.	oil bath	185	185	0.00
	D.	oil bath	243	244	-.14
	E.	oil bath	270	271	-.14
Wb2	A.	water bath	72	72	0.00
	B.	oil bath	131	130	0.17
	C.	oil bath	185	184	0.16
	D.	oil bath	243	243	0.00
	E.	oil bath	270	271	-.14
Db2	A.	water bath	72	70	0.38
	B.	oil bath	131	130	0.17
	C.	oil bath	185	186	-.16
	D.	oil bath	243	243	0.00
	E.	oil bath	270	271	-.14
NOx	A.	water bath	72	71	0.19
	B.	oil bath	131	131	0.00
	C.	oil bath	185	186	-.16
	D.	oil bath	243	244	-.14
	E.	oil bath	270	272	-.27
Hot Box	A.	water bath	72	70	0.38
	B.	oil bath	131	130	0.17
	C.	oil bath	185	184	0.16
	D.	oil bath	244	242	0.28
	E.	oil bath	270	269	0.14

$$\text{TEMPERATURE DIFFERENCE} = \frac{(\text{REF TEMP, F} + 460) - (\text{TEST TEMP, F} + 460)}{\text{REF TEMP, F} + 460} \times 100 \leq 1.5\%$$

GCA

GCA CORPORATION
Precision Scientific Group

3737 West Cortland Street
Chicago, Illinois 60647
Telephone: 312-227-2660
Telex: 254028

February 2, 1984

Environmental Testing
1700 University Commercial Place
Charlotte, N.C. 28213

Attn: Mr. Paul Jenkins

Subj: Certification Wet Test Meter

Dear Mr. Jenskins:

In lieu of any printed certification from our company, we offer as follows our statement on the referenced subject.

> "The Wet Test Meter catalog number 63123, has been tested at our plant facilities using a Meter Prover Bottle NBS registration No. 4897. The Meter was found to perform to our advertised specifications of plus or minus 1/2% error in flow rate and conforms to specifications of ASTM D-1071."

Respectfully,

Bob Husberg

Bob Husberg
Supervisor, Customer Service

BH/mg

Whatman Inc.

Whatman Inc. • 9 Bridewell Place, Clifton, New Jersey 07014 • Telephone: (201) 777-4825
Telex: 133426 • Cable: REEVEPAP

February 1, 1979

Mr. Paul R. Jenkins, Jr.
Vice-President
Environmental Testing Inc.
1700 University Commercial Place
Charlotte, North Carolina 28213

Dear Mr. Jenkins:

Further to our telephone conversation on January 15, 1979 Reeve Angel Grade 900AF is tested with a Q128 DOP Penetrometer manufactured by the Air Technology Association to measure DOP. This is a more sophisticated unit than that listed in the Federal Register, Part II, Thursday, August 18, 1977, Environmental Protection Agency, Standards of Performance for New Stationary Sources.

Grade 900AF will meet the EPA DOP requirements of 0.05 ≤ percent penetration on a 0.3 micron dioctyl phthalate smoke particles as listed on page 41778 of the Federal Register, Vol. 42, No. 160, Thursday, August 18, 1977 under 3. Reagent, 3.1.1 Filters.

I hope this will satisfy your inquiry. If we can be of any further service, please contact us at your convenience.

Very truly yours,

John Zacharias
Vice President
Business Manager, Paper Division, N. A.

JZ/mpm

CORNING

Science Products
Corning Glass Works
Corning, New York 14831 USA
Tel: 607-974-9000

a CORNING Laboratory Sciences Company

November 18, 1986

Mr. Paul Jenkins
Environmental Testing Inc.
1700 University Commercial Place
Charlotte, NC 28213

Dear Mr. Jenkins:

Confirming our telephone conversation, our volumetric apparatus is calibrated in conformance with ASTM Standard E 542.

Very truly yours,

Allen R. Fuller
Product Engineering Supervisor

b10012

METTLER

Weight Traceability Certificate

To: Environmental Testing, Inc
1700 University Commercial Dr.
Charlotte, NC 28213

The balances listed below have been serviced by our representative on
December 27, 1988

This is to certify that the test weights used are traceable to the National Bureau of Standards.

	Analytical	Precision
METTLER identification number of test weights used:	26	
METTLER calibration date of test weights used:	7-1-88	
National Bureau of Standards test number:	737/0670-Met49	

Model and serial number of balances serviced:

AE163-C57742
H54AR-677277

METTLER Service Representative

12-27-88
Date of Issue

WALTER H. KESSLER COMPANY, INC.

THERMOMETERS KESSLER HYDROMETERS

ONE-SIXTY HICKS STREET • WESTBURY, LONG ISLAND, NEW YORK • 516 EDGEWOOD 4-4064

MANUFACTURERS CERTIFICATE OF CALIBRATION

This is to certify that the instrument listed below has been tested in our temperature calibration laboratory in accordance with the latest procedures in the finest constant temperature equipment available, against National Bureau of Standards certified master standards.

Certified for: Fisher Scientific Company

Description: Thermometer #15-041D -1/201°C in 0.2° Div Total Immersion

Instrument Serial No. 811 007 **Date Certified:** January 30, 1981

Reading of This Instrument	Reading of N.B.S. Standard (True Temperature)
+0.02C	0.00C
20.00C	20.00C
40.00C	40.00C
59.96C	60.00C
79.98C	80.00C
100.02C	100.00C
119.92C	120.00C
139.98C	140.00C
160.00C	160.00C
180.00C	180.00C
199.86C	200.00C

The tabulated readings apply provided the ice-point reading taken after exposure for not less than 3 days to a temperature of about 25° C (77° F) is +0.02C . If the ice-point reading is found to be higher (or lower) than stated. all other readings will be higher (or lower) by the same amount.

Serial & Test numbers of National Bureau of Standards certified instruments referenced in certification of the thermometer listed above:

NBS Standard M44165,78A-227,M44451,78A-220,78A-601/602

NBS Test No 176240,219883,176240,219883,219606

WALTER H. KESSLER COMPANY, INC.

Irene Ciccilla

KIMBLE
Division of
Owens-Illinois

December 11, 1986

Mr. Paul R. Jenkins
Environmental Testing, Inc.
1700 University Commercial Place
Charlotte, North Carolina 28213

REF: Calibration of volumetric glassware
Mr. P. Jenkins letter 12-5-86

Dear Mr. Jenkins,

Volumetric standards, utilized by Kimble for calibration of class A and B laboratory glassware, are designed to meet applicable calibration requirements of ASTM Standard E 542.

Accuracy of balances, weights and thermometers employed for calibration of volumetric standards is traceable to National Bureau of Standards.

Sincerely,

Lew Horan
Standards Dept.

Mike Mollick
Quality Control

cc: Mr. N. DeBello - M.O.
Mr. E. Trasoras - Q.A.

the OMEGA Group

DATE: 12-10-85

CERTIFICATE OF CALIBRATION

CUSTOMER: ENVIRONMENTAL TESTING INC
1700 UNIV COMMERICAL PL
CHARLOTTE NC 28213

Customer Purchase Order: 2861RO
OMEGA Work Order No: SO 511268760
MODEL: HH-2
SERIAL NO: 14403

OMEGA ENGINEERING certifies that the above instrumentation has been calibrated and tested to meet or exceed the published specifications. This calibration and testing was performed using instrumentation and standards that are traceable to the U.S. National Bureau of Standards.

Reference: NATIONAL BUREAU OF STANDARDS TEST NO(s): 36320

Tony D'Inverno
Supervisor, Instrumentation

CAL-3

OMEGA ENGINEERING, INC.
OMEGA PRESS
OMEGA INTERNATIONAL CORP.
BIOMEGA
One Omega Drive, Box 4047, Stamford, CT 06907-0047 (203) 359-1660 Telex 996404 Cable OMEGA FAX (203) 359-7700

Whatman
AIR POLLUTION FILTERS

TECHNICAL DATA ON

EPM 2000 AIR SAMPLING FILTERS

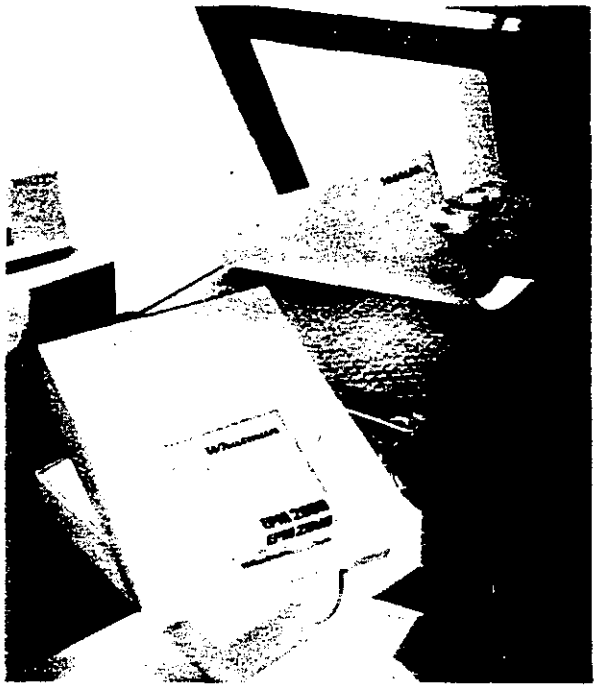

SELECTED AS THE EPA STANDARD

EPM 2000 is the new Whatman filter which has been specifically developed for use in high volume air samplers, and has been chosen by the EPA for its technical excellence and overall suitability for use in the nationwide network of Hi-Vol air samplers. The high air flow rate and excellent particle retention characteristics make EPM 2000 the filter of choice for high volume sampling.

- Specifically developed for use with high volume air samplers.
- Chosen by the EPA for their National Air Surveillence Network (Contract No. 68-02-3709).
- Manufactured from 100% borosilicate glass microfibres under strictly controlled conditions.
- Retention efficiency 99.999% for NaCl particles, mass median 0.6 microns.
- Heat-treated after manufacture to remove organic traces.
- No binder used in manufacture for maximum purity.
- Each sheet individually numbered for rapid identification and recording.

EPM 2000—THE STATE OF THE ART FILTER MEDIUM FOR HI-VOL AIR SAMPLING

Today, more than ever before, concern over the potential effects on human life of toxic particulates in the air, is running high. The sampling and analytical methods employed in the monitoring of air quality are becoming ever more sophisticated.

EPM 2000, as successor to the popular EPM 1000, has been developed to complement these methods as a technically advanced air filtration medium, suitable for both quantitative and qualitative measurements.

HIGH PURITY—HIGH PERFORMANCE

The EPA place specific requirements on the purity and performance of the glass microfibre filters which are used throughout their National Air Surveillence Network of pollution monitoring stations.

EPM 2000 is manufactured from 100% pure borosilicate glass microfibres, with no added binder, under strictly controlled conditions. Maximum purity is ensured by the use of heat treatment after manufacture to remove any traces of organic material which may interfere with subsequent analyses, and closely monitored quality assurance methods are employed. Detailed chemical analyses of trace pollutants can thus be carried out with utmost accuracy and minimum background interference.

EPM 2000 offers high flow rates while simultaneously providing exceptionally high particle retention efficiencies. Complete reliance can be placed on EPM 2000 to provide optimum results in airborne particulate collection.

Each 8" × 10" sheet of EPM 2000 is individually numbered for rapid identification and recording.

AVAILABILITY

Two sizes are available as standard

8" x 10" sheets (packs of 100)	Cat. No. 1882 866
4.7 cm circles (packs of 100)	Cat. No. 1882 047

PUBLICATION NO 888 EPM A