Note: This is a reference cited in *AP 42, Compilation of Air Pollutant Emission Factors, Volume I Stationary Point and Area Sources.* AP42 is located on the EPA web site at www.epa.gov/ttn/chief/ap42/

The file name refers to the reference number, the AP42 chapter and section. The file name "ref02_c01s02.pdf" would mean the reference is from AP42 chapter 1 section 2. The reference may be from a previous version of the section and no longer cited. The primary source should always be checked.

ROCK

TEST NUMBER 73-ROC-2

INTERNATIONAL MINERALS AND
CHEMICAL CORP.

NORALYN, FLORIDA

Prepared by

Normal Kulujian, P.E.
Richard W. Gerstle, P.E.

Contract No. 68-02-0237
Task No. 19

PEDCo-Environmental Specialists, Inc.
Cincinnati, Ohio

June 1973

I. TABLE OF CONTENTS

		Page
II.	INTRODUCTION	1
III.	SUMMARY OF RESULTS	3
IV.	PROCESS DESCRIPTION	7
V.	PROCESS OPERATION	10
VI.	LOCATION OF SAMPLING POINTS	11
VII.	SAMPLING AND ANALYTICAL PROCEDURES	14
	Set Up Procedure	14
	Preliminary Traverse and Moisture	14
	Gas Velocity and Temperature	15
	Molecular Weight and Gas Analysis	15
	Particulate Sampling	15
	Sample Storage	17
VIII.	APPENDIX	
	A. COMPLETE PARTICULATE RESULTS WITH EXAMPLE CALCULATIONS	
	B. PROCESS OPERATIONAL LOG	
	C. FIELD DATA	
	D. SAMPLING PROCEDURES	
	E. LABORATORY REPORT	
	F. SAMPLE NUMBER LOG	
	G. TEST LOG	
	H. SAMPLE HANDLING LOG	
	I. PROJECT PARTICIPANTS AND TITLES	
	J. PRESURVEY REPORT	

II. INTRODUCTION

Under the Clean Air Act of 1970, as amended, the Environmental Protection Agency is charged with the establishment of performance standards for stationary sources which may contribute significantly to air pollution. A performance standard is based on the best emission reduction systems which have been shown to be technically and economically feasible.

In order to set realistic performance standards, accurate data on pollutant emissions must be gathered from the stationary source category under consideration.

Atmospheric emissions of particulate and fluorides from the International Minerals and Chemical Corporation (IMC) rock grinding operation in Noralyn, Florida were sampled to establish a guide for New Source Performance Standards as authorized by the Clean Air Act of 1970. Triplicate tests were made to determine particulate concentrations at the inlet and outlet of the rock grinder. The three tests were made February, 1973.

Stored rock is transferred to a mill by a conveyor belt. Different ducts are used for the ground product and exhaust gases

from the mill. The exhaust gases are cleaned in a baghouse. The cleaned exhaust is pulled up through the stack by an induced draft fan. The material caught in the baghouse is recycled back to the milling operation.

III. SUMMARY OF RESULTS

Table 3.1 presents the overall test summary of the three particulate tests in U.S. and metric units. Results from the three tests were averaged to obtain values in Table 3.1. Results from each individual test are summarized in Table 3.2.

The rock grinding operation is enclosed in a building, so both inlet and outlet sampling sites were under cover. A clean up area was not available, so the samples from the test trains were transferred to containers in a mobile van.

The reagent in the Orsat apparatus produced questionable exhaust gas analyses, so values of ambient air were assumed for calculations. Since the air entering the milling operation experiences no change (i.e. combustion), the assumption of atmospheric properties is valid.

The inlet site consistently had a higher flow rate than the outlet site; values for the three tests ranged between 16 and 18 percent greater. A leak through the ducting, control device, or dampers may have accounted for the loss.

The high isokinetic value for the Run No. 8 inlet test resulted because the improper nozzle size was used. A comparison of the inlet and outlet catch reveals that while the maximum

dust from the three tests was caught at the outlet site (Table 3.2), the inlet sample was the smallest of the three catches. Therefore the data from the second test (Run No. 8) was not averaged in Table 3.1 values.

A minor process upset also occurred during Run No. 8, when a large wooden object jammed the mill. The wood was removed and the mill was back in operation within ten minutes.

The various types of feed are discussed in Section V. Raw materials and product samples were taken during the tests. It was impossible to get a baghouse catch sample because there was no access opening.

Table 3.1 OVERALL SUMMARY OF RESULTS FROM PHOSPHATE ROCK GRINDER

Pollutant Measurement System	Units		Particulate			
			U. S.		Metric	
	U. S.	Metric	Inlet[h]	Outlet	Inlet[h]	Outlet
Volume of Gas Sampled	DSCF[b]	DNm^3[e]	61.564	114.743	1.7433	3.2492
Percent Moisture by Volume	%	%	5.98	5.97	5.98	5.97
Average Stack Temperature	°F	°C	202	161	94.2	71.5
Dry Stack Volumetric Flow Rate	DSCFM[c]	DNm^3/sec[f]	2996	2708	1.414	1.278
Actual Stack Volumetric Flow Rate	ACFM[d]	M^3/sec[g]	3931	3312	1.855	1.563
Percent Isokinetic	%	%	104.2	98.4	104.2	98.4
Feed Rate	Ton/hr	Mton/hr	34.5	35.0	31.3	31.7
Partial Catch[a]						
Weight	mg	mg	12915	48.0	12915	48.0
Concentration/Dry Volume	gr/DSCF	mg/DN_m^3	3.246	0.00647	7427	14.8
Concentration/Actual Volume	gr/ACF	$mg/_m^3$	2.473	0.00529	5658	12.1
Concentration/Time	lb/hr	kg/hr	83.03	0.150	37.66	0.0679
Lb/ton, Feed Concentration/ Input Feed Rate	lb/ton	kg/Mton	2.399	0.0042	1.199	0.0021
Total Catch						
Weight	mg	mg	12949	100.6	12949	100.6
Concentration/Dry Volume	gr/DSCF	mg/DN_m^3	3.255	0.01358	7446	31.08
Concentration/Actual Volume	gr/ACF	mg/m^3	2.480	0.01110	5673	25.40
Concentration/Time	lb/hr	kg/hr	83.25	0.314	37.76	0.142
Lb/ton, Feed Concentration/ Input Feed Rate	lb/ton	kg/Mton	2.405	0.0089	1.203	0.0044
Percent Impinger Catch	%	%	0.25	50.6	0.25	50.6

a) Partial catch includes probe, cyclone and filter.
b) Dry standard cubic feet at 70°F, 29.92 in. Hg.
c) Dry standard cubic feet per minute at 70°F, 29.92 in. Hg.
d) Actual cubic feet per minute.
e) Dry normal cubic meters at 21.1°C, 760 mm Hg.
f) Dry normal cubic meters per second at 21.1°C, 760 mm Hg.
g) Actual cubic meters per second.
h) Second inlet test (Run No. 8) not included in averages.

Table 3.2 PARTICULATE EMISSION DATA SUMMARY

IMC Corp., Noralyn, Florida - Rock Grinder Operation

	Inlet			Outlet		
Run	7	8	9	7	8	9
Date	2-16-73	2-16-73	2-16-73	2-16-73	2-16-73	2-16-73
Volume of Gas Sampled-DSCF[a]	60.401	59.022	62.728	114.965	112.393	116.870
Percent Moisture by Volume	6.07	5.91	5.89	5.32	6.05	6.53
Average Stack Temperature-°F	203	205	200	161	161	160
Stack Volumetric Flow Rate-DSCFM[b]	2916	2903	3075	2720	2654	2751
Stack Volumetric Flow Rate-ACFM[c]	3835	3822	4026	3295	3256	3386
Percent Isokinetic	105.0	213.8	103.4	98.2	98.3	98.7
Feed Rate-ton/hr	36.0	36.0	33.0	36.0	36.0	33.0
Particulates-probe, cyclone, and filter catch						
mg	14513	10303	11316	63.3	47.8	33.0
gr/DSCF	3.708	2.694	2.784	0.00849	0.00656	0.00435
gr/ACF	2.820	2.048	2.126	0.00698	0.00535	0.00354
lb/hr	92.686	67.027	73.373	0.198	0.149	0.102
lb/ton feed	2.574	1.861	2.223	0.0055	0.0041	0.0031
Particulates, total catch						
mg	14556	10332	11342	111.0	130.0	60.7
gr/DSCF	3.719	2.702	2.790	0.01490	0.01784	0.00801
gr/ACF	2.828	2.052	2.131	0.01224	0.01455	0.00651
lb/hr	92.961	67.216	73.542	0.347	0.406	0.188
lb/ton feed	2.582	1.867	2.228	0.0096	0.0113	0.0057
Percent impinger catch	0.3	0.3	0.2	43.0	63.2	45.6

a) Dry standard cubic feet at 70°F, 29.92 in. Hg.
b) Dry standard cubic feet per minute at 70°F, 29.92 in. Hg.
c) Actual cubic feet per minute.

IV. PROCESS DESCRIPTION

A phosphate rock plant flow diagram, shown in Figure 4.1, illustrates the steps of the process in relation to the grinding operation. After the phosphate rock is mined and dried, it is ready to be ground.

The Noralyn, Florida IMC plant uses the swept air principle of grinding the phosphate rock. A picture of the grinding operation is shown in Figure 4.2. Each of three mills can process approximately 35 tons of rock per hour. The velocity of the air through the Raymond Mills governs the particle size of the ground rock. The ground product is fed to a rail car where it is shipped to fertilizer or elemental phosphorus plants. Exhaust gases pass through a baghouse and an induced draft fan before being emitted to the atmosphere. The baghouse collection hopper is ducted back to mills, recycling the caught particles.

Two different milling configurations were present at the Noralyn plant. These are discussed extensively in Appendix C.

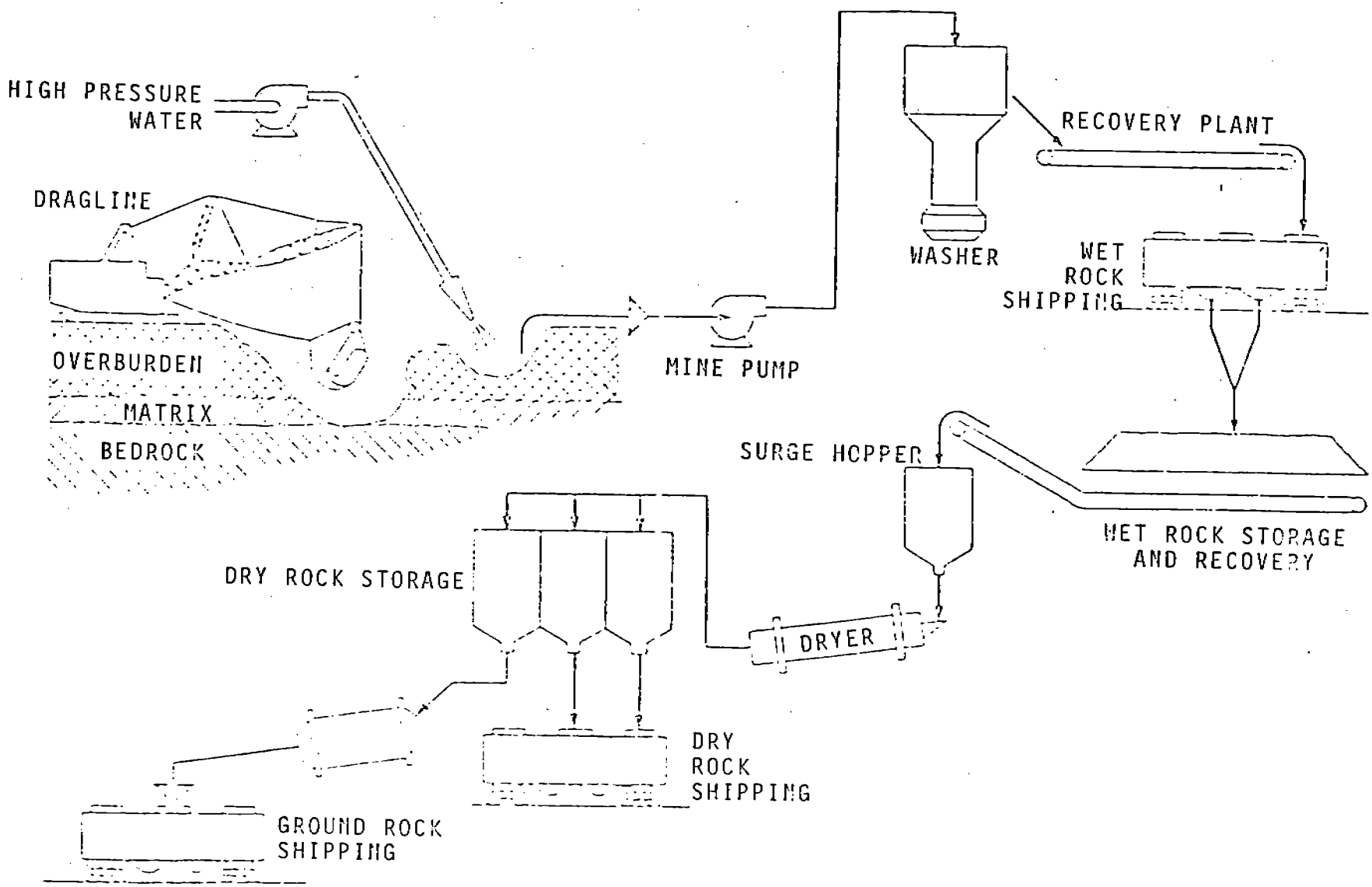

Figure 4.1 Phosphate rock flow sheet.

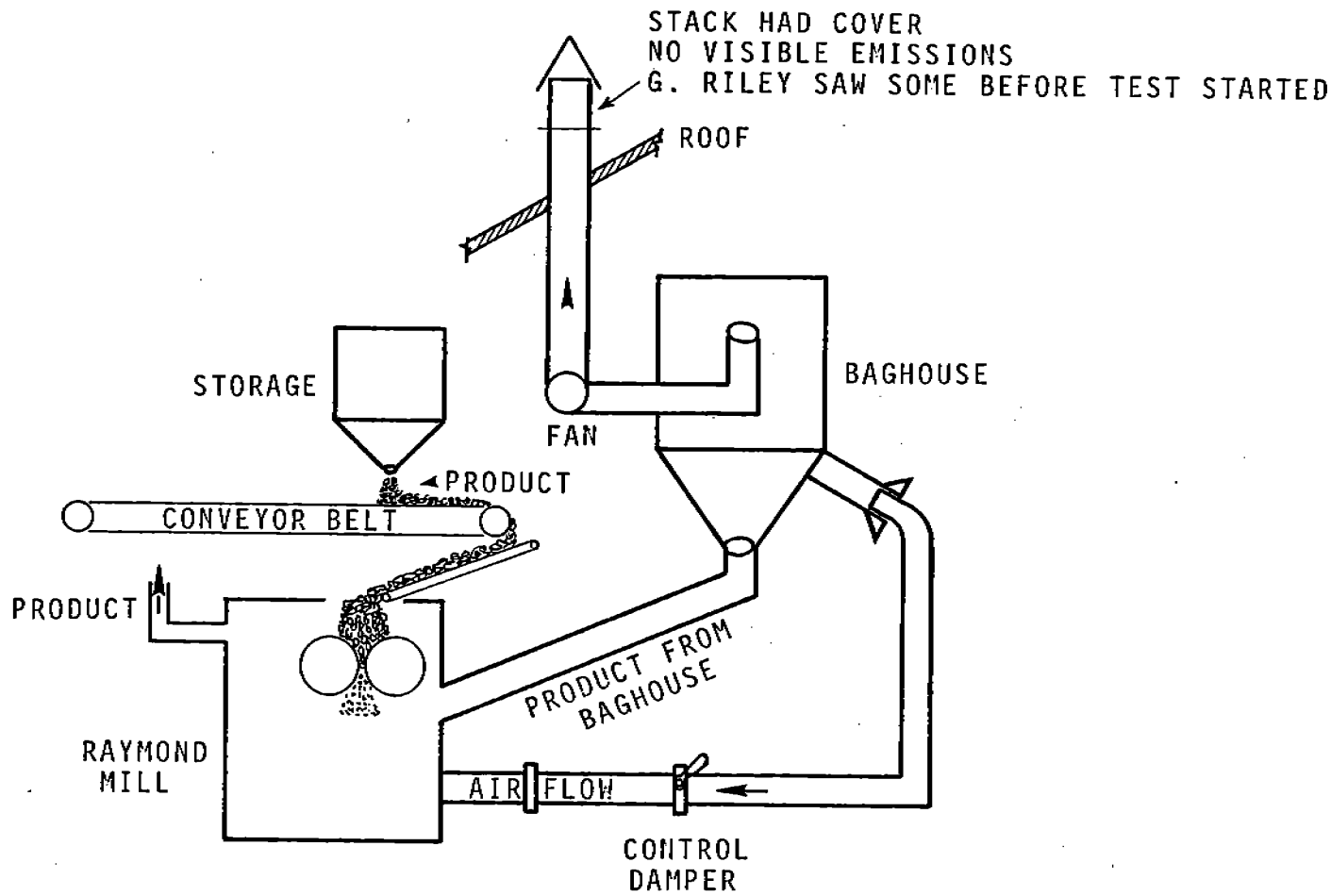

Figure 4.2 Diagram of phosphate rock grinder at IMC plant, Noralyn, Florida.

V. PROCESS OPERATION*

During the testing, process operations of the Noralyn rock grinding mill No. 4 were monitored by Mr. J. Peoples of EPA. Mr. Peoples collected process data and communicated to the testing crew any upsets or abnormalities during the testing periods.

Feed and grinding rates are based on estimates obtained from IMC plant personnel and observed loading rates of railroad cars (Appendix C contains detailed comments recorded during the testing periods).

Particulate tests were conducted on February 16, 1973 at the No. 4 rock grinder unit. The sampling began at 11:25 A.M. The material processed during the first and second run was a 65-200 grind (65% through a 200 mesh screen). A 90-100 grind was produced during the third run. The testing was completed at 7:45 P.M. Raw materials and product samples were obtained during all of these tests. No process upsets occurred during Runs 1 and 3. However during Run 2 testing had to be delayed twice due to operational difficulties. The opacity of the grinder stack was less than 10% opacity during the testing periods.

---

*Written and supplied by EPA.

VI. LOCATION OF SAMPLING POINTS

A section 24 inches upstream from the entrance to the baghouse was the best inlet sampling site. The 11.75 inch diameter duct had a 45 degree bend approximately 42 inches upstream of the sampling site. A diagram of the rock grinding inlet and sampling points is shown in Figure 6.1.

Since the inlet sampling location was only about 3.6 diameters downstream of the duct bend, 28 traverse points were chosen. The project officer approved the number of sampling points and a test duration of 84 minutes (3 minutes per point).

Two sample ports were installed on the west side and bottom of the horizontal duct. The sample box was placed on a variable set of jacks when sampling the vertical traverse points.

Two possible outlet sampling sites were considered, one inside the building and one on the roof. The inside site was chosen so both inlet and outlet sampling team could coordinate the tests. The chosen sampling site was less than one foot from the roof and approximately four feet below the top of the stack as shown in Figure 6.2. Sampling ports were cut from the narrow side of the 12 in. x 14 in. rectangular stack. Six sample points were chosen on four traverse locations; the 24 points were sampled for five minutes each, or 120 minutes per test. The draft fan was the nearest upstream obstruction, 64 inches from the sampling site.

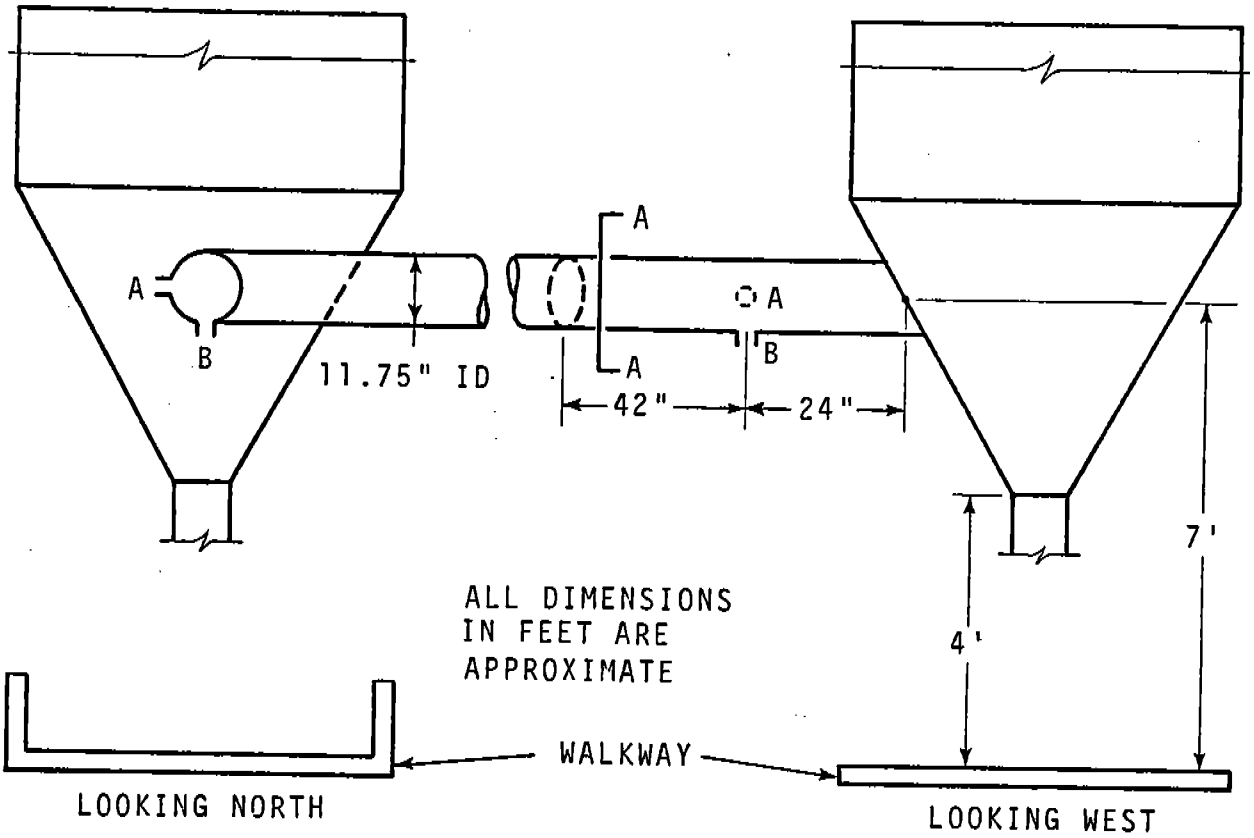

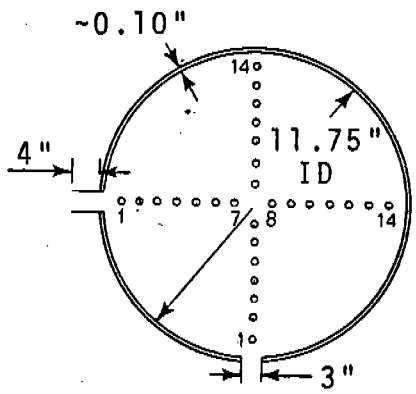

SECTION AA

POINT	TRAVERSE DISTANCE, INCHES
1	1.0
2	1.0
3	1.0
4	1.7
5	2.4
6	3.2
7	4.3
8	7.5
9	8.6
10	9.4
11	10.0
12	10.7
13	10.7
14	10.7

Figure 6.1 Diagram of rock grinder inlet and sampling points.

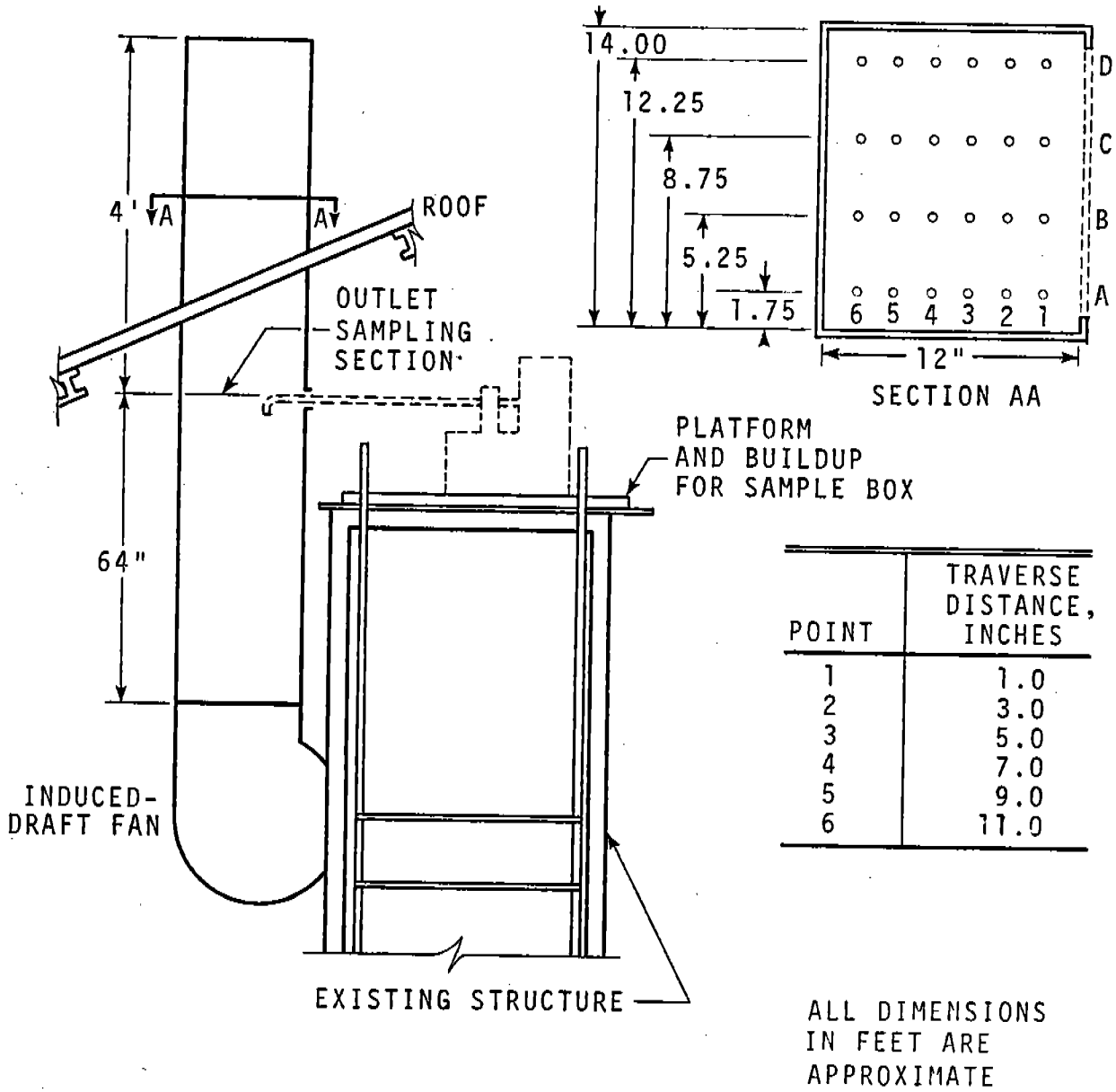

POINT	TRAVERSE DISTANCE, INCHES
1	1.0
2	3.0
3	5.0
4	7.0
5	9.0
6	11.0

Figure 6.2 Diagram of rock grinder outlet and sampling points.

VI. SAMPLING AND ANALYTICAL PROCEDURES

All particulate sampling procedures were similar to Method 5 as defined in the Federal Register. The contractor performed all testing and sample recovery operations; collected samples were analyzed by EPA personnel. The inlet and outlet sampling crew consisted of two man teams which included a probe and meter technician.

Set Up Procedure

The inlet and outlet trains were set up in a routine fashion. In both cases the sample box and meter box were within 15 feet of each other.

Preliminary Traverse and Moisture

A preliminary velocity traverse at the inlet and outlet location determined approximate nozzle sizes and isokinetic sampling conditions. A 0.180-inch I.D. nozzle was used for inlet testing while the outlet was sampled with a 0.277 inch I.D. nozzle. The wrong nozzle (0.125 I.D.) was inadvertently placed on the probe for the second inlet test (Run 8). This resulted in a high isokinetic sampling rate.

The inlet stack gas moisture was determined by a train similar to Figure 4.2, Federal Register, Volume 36, No. 247, page 24887. A wet and dry bulb thermometer was used to calculate outlet flue gas moisture.

Gas Velocity and Temperature

Velocities were measured at each sampling point across the stack diameter to determine an average value according to procedures described in the Federal Register. Gas flow temperatures were measured by long stem dial thermometers.

Molecular Weight and Gas Analysis

The flue gas was assumed to have a composition and molecular weight similar to atmospheric air. The values were used to determine isokinetic sampling rates.

Particulate Sampling

Particulate matter was isokinetically sampled from the drying operation with a train shown in Figure 7.1. The train consisted of a stainless steel nozzle, a heated glass probe, a heated glass fiber filter, and four impingers connected in series with glass ball joint fittings. The first two impingers contained 100 ml of water each, the third impinger was left empty and approximately 200 grams of preweighed silica gel were placed in the fourth impinger.

In all cases sampling was conducted under isokinetic conditions by continually monitoring the velocity with a pitot tube and adjusting the sampling rate accordingly.

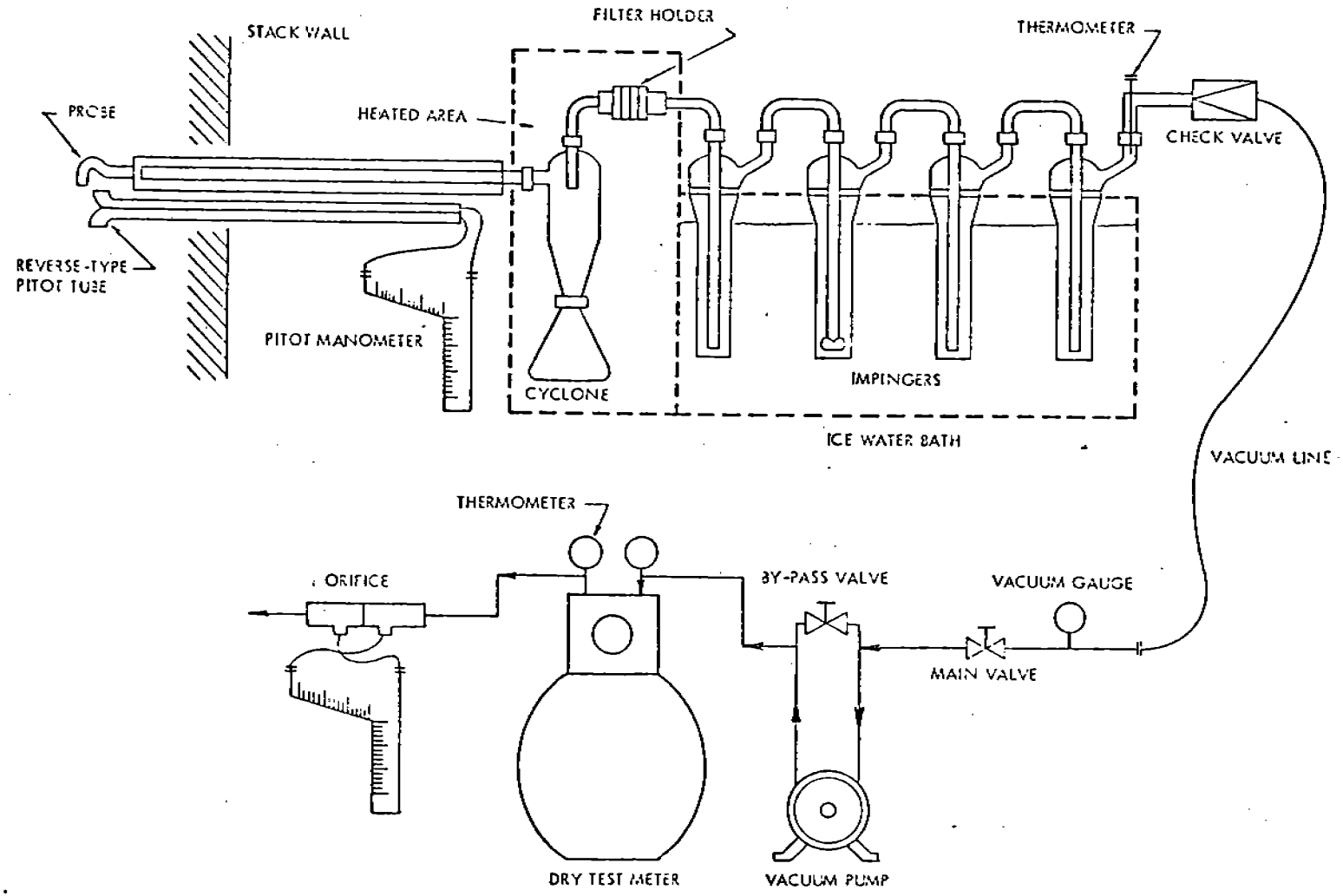

Figure 7.1. Particulate sampling train.

Inlet concentrations were so heavy that several filter changes were needed during each test to pull the proper amount of air through the train. During the last inlet test (Run 9), an impinger connector was broken while transferring the train between sampling ports. Contents from the broken impinger were included in the acetone wash.

The train cleanup procedure consisted of measuring the water collected and weighing the silica gel to determine moisture content. The water was then poured into a glass jar. The filter was removed and placed in a marked container. The probe and front half of the filter holder were then rinsed with analytical reagent grade acetone and the washings placed in a glass container. The rear half of the train consisting of filter holder, impingers, and connectors was rinsed with distilled water and this water added to the impinger contents. The rear half of the train was then rinsed with acetone and placed in a third sample jar. A portion of the acetone and distilled water used in the sample recovery were set aside and used as blanks for analysis.

Sample Storage

All samples were placed in 1000 ml glass and polyethylene containers and marked with EPA identification tags (see Appendix F). The bottles were then put in wooden boxes with styrofoam separators and hand delivered to EPA, North Carolina, after all tests were completed.

APPENDIX A

COMPLETE PARTICULATE RESULTS

WITH EXAMPLE CALCULATIONS

Run 7 is actually the first test run at the Noralyn Plant. Six previous tests were undertaken at another IMC location, but the numbering sequence chosen in the field did not start over at the NORALYN site.

Table A-1 PARTICULATE RESULTS

Run No.		IN	7	OUT
Test Date, 1973			2-16	
Sampling Time, 24 hour clock		1126-1315		1125-1328
Sampling Location				
D_n	Sampling Nozzle Diameter, in.	0.180		0.277
T_t	Net Time of Test, Min.	84		120
P_b	Barometric Pressure, in. Hg Absolute	30.40		30.40
P_m	Average Orifice Pressure Drop, in. H_2O	1.50		2.57
V_m	Volume of Dry Gas Sampled at Meter Conditions, DCF	60.138		117.355
T_m	Average Gas Meter Temperature, °F	78.5		93.0
$V_{m_{std}}$	Volume of Dry Gas Sampled at Standard Conditions[a], DSCF	60.401		114.965
V_w	Total H_2O Collected in Impingers and Silica Gel, ml	82.4		136.4
$V_{w_{gas}}$	Volume of Water Vapor Collected at Standard Conditions[b], SCF	3.906		6.465
%M	% Moisture in Stack Gas, by Volume	6.07		5.32
M_d	Mole Fraction of Dry Gas	0.9393		0.9468
% CO_2	Volume % Dry			
% O_2	Volume % Dry			
% CO	Volume % Dry			
% N_2	Volume % Dry			
% EA	Percent Excess Air			
MW_d	Molecular Weight of Stack Gas, Dry Basis (Assumed)	29.00		29.00

Run No.		IN	OUT
MW	Molecular Weight of Stack Gas, Wet Basis	28.33	28.41
C_p	Pitot Tube Coefficient	0.83	0.83
T_s	Average Stack Temperature, °F	203	161
N_p	Net Sampling Points	28	24
P_{st}	Static Pressure of Stack Gas, in H_2O	-1.35	+0.30
P_s	Stack Gas Pressure, in. Hg Absolute	30.30	30.42
V_s	Stack Gas Velocity at Stack Conditions, fpm	5094	2838
A_s	Stack Area, ft^2	0.753	1.167
Q_s	Dry Stack Gas Volumetric Flow Rate at Standard Conditions[c], DSCFM	2916	2720
Q_a	Stack Gas Volumetric Flow Rate at Stack Conditions, ACFM	3835	3295
%I	Percent Isokinetic	105.0	98.2
%O	Percent Opacity		
T_c	Production Rate - Tons/hr.	36.0	36.0
m_f	Particulate - Probe, Cyclone, and Filter, mg	14513	63.3
m_t	Particulate - Total, mg	14556	111.0
I_c	% Impinger Catch	0.3	43.0
C_{an}	Particulate - Probe, Cyclone, and Filter, gr/DSCF	3.708	0.00849
C_{ao}	Particulate - Total, gr/DSCF	3.719	0.01490

Run No.		IN	7	OUT
C_{at}	Particulate - Probe, Cyclone, and Filter, gr/ACF	2.820		0.00698
C_{au}	Particulate - Total, gr/ACF	2.828		0.01224
C_{aw}	Particulate - Probe, Cyclone, and Filter, lb/hr.	92.686		0.198
C_{ax}	Particulate - Total, lb/hr.	92.961		0.347
P_{tf}	Particulate - Probe, Cyclone and Filter, lb/ton	2.574		0.0055
P_{tt}	Particulate - Total, lb/ton	2.582		0.0096

[a] Dry standard cubic feet at 70°F, 29.92 in. Hg.

[b] Standard conditions at 70°F, 29.92 in. Hg.

[c] Dry standard cubic feet per minute at 70°F, 29.92 in. Hg.

Table A- 2 PARTICULATE RESULTS

Run No.		IN	8	OUT
Test Date, 1973			2-16	
Sampling Time, 24 hour clock		1404-1647		1444-1654
Sampling Location				
D_n	Sampling Nozzle Diameter, in.	0.1250		0.277
T_t	Net Time of Test, Min.	84		120
P_b	Barometric Pressure, in. Hg Absolute	30.40		30.40
P_m	Average Orifice Pressure Drop, in. H_2O	1.48		2.48
V_m	Volume of Dry Gas Sampled at Meter Conditions, DCF	59.095		115.999
T_m	Average Gas Meter Temperature, °F	81.0		99.0
$V_{m_{std}}$	Volume of Dry Gas Sampled at Standard Conditions[a], DSCF	59.022		112.393
V_w	Total H_2O Collected in Impingers and Silica Gel, ml	78.2		152.8
$V_{w_{gas}}$	Volume of Water Vapor Collected at Standard Conditions[b], SCF	3.707		7.243
%M	% Moisture in Stack Gas, by Volume	5.91		6.05
M_d	Mole Fraction of Dry Gas	0.9409		0.9395
% CO_2	Volume % Dry			
% O_2	Volume % Dry			
% CO	Volume % Dry			
% N_2	Volume % Dry			
% EA	Percent Excess Air			
MW_d	Molecular Weight of Stack Gas, Dry Basis (Assumed)	29.00		29.00

Run No.		IN	8	OUT
MW	Molecular Weight of Stack Gas, Wet Basis	28.35		28.33
C_p	Pitot Tube Coefficient	0.83		0.83
T_s	Average Stack Temperature, °F	205		161
N_p	Net Sampling Points	28		24
P_{st}	Static Pressure of Stack Gas, in H_2O	-1.35		+0.30
P_s	Stack Gas Pressure, in. Hg Absolute	30.30		30.42
V_s	Stack Gas Velocity at Stack Conditions, fpm	5076		2790
A_s	Stack Area, ft^2	0.753		1.167
Q_s	Dry Stack Gas Volumetric Flow Rate at Standard Conditions[c], DSCFM	2903		2654
Q_a	Stack Gas Volumetric Flow Rate at Stack Conditions, ACFM	3822		3256
%I	Percent Isokinetic	*213.8		98.3
%O	Percent Opacity			
T_c	Production Rate - Tons/hr.	36.0		36.0
m_f	Particulate - Probe, Cyclone, and Filter, mg	10303		47.8
m_t	Particulate - Total, mg	10332		130.0
I_c	% Impinger Catch	0.28		63.2
C_{an}	Particulate - Probe, Cyclone, and Filter, gr/DSCF	2.694		0.00656
C_{ao}	Particulate - Total, gr/DSCF	2.702		0.01784

* Wrong diameter nozzle inserted on probe (0.125 in. instead of 0.180 in. nozzle).

Run No.		IN	8	OUT
C_{at}	Particulate - Probe, Cyclone, and Filter, gr/ACF	2.0487		0.00535
C_{au}	Particulate - Total, gr/ACF	2.052		0.01455
C_{aw}	Particulate - Probe, Cyclone, and Filter, lb/hr.	67.027		0.149
C_{ax}	Particulate - Total, lb/hr.	67.216		0.406
P_{tf}	Particulate - Probe, Cyclone and Filter, lb/ton	1.861		0.0041
P_{tt}	Particulate - Total, lb/ton	1.867		0.0113

[a] Dry standard cubic feet at 70°F, 29.92 in. Hg.

[b] Standard conditions at 70°F, 29.92 in. Hg.

[c] Dry standard cubic feet per minute at 70°F, 29.92 in. Hg.

Table A- 3 PARTICULATE RESULTS

Run No.		IN	9	OUT
Test Date, 1973			2-16	
Sampling Time, 24 hour clock		1746-1939		1742-1945
Sampling Location				
D_n	Sampling Nozzle Diameter, in.	0.180		0.277
T_t	Net Time of Test, Min.	84		120
P_b	Barometric Pressure, in. Hg Absolute	30.34		30.40
P_m	Average Orifice Pressure Drop, in. H_2O	1.66		2.67
V_m	Volume of Dry Gas Sampled at Meter Conditions, DCF	62.555		119.701
T_m	Average Gas Meter Temperature, °F	78.5		95.0
$V_{m_{std}}$	Volume of Dry Gas Sampled at Standard Conditions[a], DSCF	62.728		116.870
V_w	Total H_2O Collected in Impingers and Silica Gel, ml	82.9		172.2
$V_{w_{gas}}$	Volume of Water Vapor Collected at Standard Conditions[b], SCF	3.929		8.162
%M	% Moisture in Stack Gas, by Volume	5.89		6.53
M_d	Mole Fraction of Dry Gas	0.9411		0.9347
% CO_2	Volume % Dry			
% O_2	Volume % Dry			
% CO	Volume % Dry			
% N_2	Volume % Dry			
% EA	Percent Excess Air			
MW_d	Molecular Weight of Stack Gas, Dry Basis (Assumed)	29.00		29.00

Run No.		IN	9	OUT
MW	Molecular Weight of Stack Gas, Wet Basis	28.35		28.28
C_p	Pitot Tube Coefficient	0.83		0.83
T_s	Average Stack Temperature, °F	200		160
N_p	Net Sampling Points	28		24
P_{st}	Static Pressure of Stack Gas, in H_2O	-1.35		+0.30
P_s	Stack Gas Pressure, in. Hg Absolute	30.24		30.42
V_s	Stack Gas Velocity at Stack Conditions, fpm	5346		2904
A_s	Stack Area, ft^2	0.753		1.167
Q_s	Dry Stack Gas Volumetric Flow Rate at Standard Conditions[c], DSCFM	3075		2751
Q_a	Stack Gas Volumetric Flow Rate at Stack Conditions, ACFM	4026		3386
%I	Percent Isokinetic	103.4		98.7
%O	Percent Opacity			
T_c	Production Rate - Tons/hr.	33.0		33.0
m_f	Particulate - Probe, Cyclone, and Filter, mg	11316		33.0
m_t	Particulate - Total, mg	11342		60.7
I_c	% Impinger Catch	0.23		45.6
C_{an}	Particulate - Probe, Cyclone, and Filter, gr/DSCF	2.784		0.00435
C_{ao}	Particulate - Total, gr/DSCF	2.790		0.00801

Run No.		IN	9	OUT
C_{at}	Particulate - Probe, Cyclone, and Filter, gr/ACF	2.126		0.00354
C_{au}	Particulate - Total, gr/ACF	2.131		0.00651
C_{aw}	Particulate - Probe, Cyclone, and Filter, lb/hr.	73.373		0.102
C_{ax}	Particulate - Total, lb/hr.	73.542		0.188
P_{tf}	Particulate - Probe, Cyclone and Filter, lb/ton	2.223		0.0031
P_{tt}	Particulate - Total, lb/ton	2.228		0.0057

[a] Dry standard cubic feet at 70°F, 29.92 in. Hg.

[b] Standard conditions at 70°F, 29.92 in. Hg.

[c] Dry standard cubic feet per minute at 70°F, 29.92 in. Hg.

EXAMPLE CALCULATION
USING DATA FROM RUN 7 OUTLET

1. Volume of dry gas sampled at standard conditions[a], DSCF

$$V_{m_{std}} = \frac{17.7 \times V_m \left[P_b + \frac{P_m}{13.6}\right]}{(T_m + 460)} = \frac{17.7 \times 117.355 \left[30.40 + \frac{2.57}{13.6}\right]}{(93.0 + 460)} = 114.90 \text{ DSCF}$$

2. Volume of water vapor at standard conditions[b], SCF

$$V_{w_{gas}} = 0.0474 \times V_w = 0.0474 \times 136.4 = 6.465 \text{ SCF}$$

3. Percent moisture in stack gas

$$\% M = \frac{100 \times V_{w_{gas}}}{V_{m_{std}} + V_{w_{gas}}} = \frac{100 \times 6.465}{114.90 + 6.465} = 5.32$$

4. Mole fraction of dry gas

$$M_d = \frac{100 - \% M}{100} = \frac{100 - 5.32}{100} = 0.9468$$

5. Molecular weight of dry stack gas was assumed to be 29.00

$$MW_d = 29.00 \text{ (assumed)}$$

6. Molecular weight of wet stack gas

$$MW = MW_d \times M_d + 18\ (1 - M_d) = 29.00 \times 0.9468 + 18\ (1 - 0.9468) = 28.41$$

7. Stack gas velocity at stack conditions, fpm[c]

$$V_s = 5128.8 \times Cp \times \sqrt{\Delta P_s \times (T_s + 460)}\ \left[\frac{1}{P_s \times MW}\right]^{1/2} = 5128.8 \times 0.83 \times 19.5 \left[\frac{1}{30.42 \times 28.41}\right]^{1/2} = 2824 \text{ fpm}$$

8. Stack gas volumetric flow rate at standard conditions[d], DSCFM

$$Q_s = \frac{0.123 \times V_s \times A_s \times M_d \times P_s}{(T_s + 460)} = \frac{0.123 \times 2824 \times 1.167 \times 144 \times 0.9468 \times 30.42}{(161 + 460)} = 2707 \text{ DSCFM}$$

9. Stack gas volumetric flow rate at stack conditions, ACFM

$$Q_a = \frac{.05645 \times Q_s \ (T_s + 460)}{P_s \times M_d} = \frac{.05645 \times 2707 \ (161 + 460)}{30.42 \times .9468} = 3295 \text{ ACFM}$$

10. Percent isokinetic

$$\%I = \frac{1{,}032 \times (T_s + 460) \times V_{m_{std}}}{V_s \times T_t \times P_s \times M_d \times (D_n)^2} = \frac{1{,}032 \times (161 + 460) \times 114.90}{2838 \times 120 \times 30.42 \times 0.9468 \times (.277)^2} = 97.9$$

11. Particulate - probe, cyclone, and filter, gr/DSCF

$$C_{an} = 0.0154 \times \frac{m_f}{V_{m_{std}}} = 0.0154 \times \frac{63.3}{114.90} = 0.00848 \text{ gr/DSCF}$$

12. Particulate - total, gr/DSCF

$$C_{ao} = 0.0154 \times \frac{m_t}{V_{m_{std}}} = 0.0154 \times \frac{111.0}{114.90} = 0.0149 \text{ gr/DSCF}$$

13. Particulate - probe, cyclone, and filter at stack conditions, gr/ACF

$$C_{at} = \frac{17.7 \times C_{an} \times P_s \times M_d}{(T_s + 460)} = \frac{17.7 \times 0.00848 \times 30.42 \times 0.9468}{(161 + 460)} = 0.00696 \text{ gr/ACF}$$

14. Particulate - total at stack conditions, gr/ACF

$$C_{aw} = \frac{17.7 \times C_{ao} \times P_s \times M_d}{(T_s + 460)} = \frac{17.7 \times 0.0149 \times 30.42 \times 0.9468}{(161 + 460)} = 0.01223 \text{ gr/ACF}$$

15. Particulate - probe, cyclone, and filter, lb/hr

$$C_{aw} = 0.00857 \times C_{an} \times Q_s = 0.00857 \times 0.00848 \times 2707 = 0.197 \text{ lb/hr}$$

16. Particulate - total, lb/hr

$$C_{ax} = 0.00857 \times C_{ao} \times Q_s = 0.00857 \times 0.0149 \times 2707 = 0.346 \text{ lb/hr}$$

17. Particulate - probe, cyclone, and filter, lb/ton feed

$$P_{tf} = \frac{C_{aw}}{T_c} = \frac{0.197}{36.0} = 0.00547 \text{ lb/ton feed}$$

18. Particulate - total, lb/ton feed

$$P_{tt} = \frac{C_{ax}}{T_c} = \frac{0.346}{36.0} = 0.00961 \text{ lb/ton feed}$$

---

a) Dry standard cubic feet at 70°F, 29.92 in. Hg.
b) Standard conditions at 70°F, 29.92 in. Hg.
c) $\sqrt{\Delta P_s \times (T_s + 460)}$ is determined by averaging the square root of the product of the velocity head (ΔPs) and the absolute stack temperature from each sampling point.
d) Dry standard cubic feet per minute at 70°F, 29.92 in. Hg.

APPENDIX B

PROCESS OPERATIONAL LOG

This Appendix presents explanations of the process operations during testing.

IMC Feb. 16, 1973
NORFOLK PLANT GRINDER

Experience has shown IMC that product processed by the Raymond Mill is about 35 to 37 tons per hour. The grind is controlled by a roller. Time of testing along with filter changes for the inlets are on the attached data sheets.

Product being processed was 65-200. Meaning 65% will pass a 200 mesh screen. They indicated to a 70-100 grind at 37. The mill operated 33 T/H

There were three mills operating and feeding the rail cars. One of the mills had an air classifier in place of the roller. This one mill also had a different sub-grinder. The two identical mills had large amounts of puff shot and considerable material without at least puff. The mill with the classifier did not puff back. The difference is illustrated below.

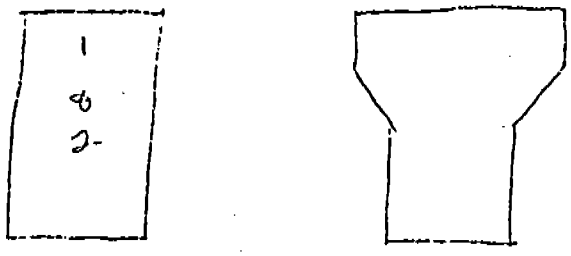

All three mills were fed the same. Plant personnel indicated that the reason [illegible] condition of the [illegible] was due to the [illegible] cleaned. However in my opinion the [illegible] mills not [illegible] [illegible]

is that it should not be considered but control. The highness on the mill at 7 seconds in the day. It did not have this problem.

The operation estimates it takes about 40 to 45 minutes for the mill to fill a 75 ton rail car. The following times are times needed to fill cars. But it doesn't include down time and personal use in a car.

Time 7:00 am	45 minutes
7:45	45
8:30	45
9:15	40
9:55	40
10:35	45
11:20	40
12:00	45
12:45	45
1:30 pm	45

(2) Grinder shut down 14:06 - 2-16-73
restarted 14:25

(3) Grinder shut down 16:33 - 2-16-73
restarted 16:38

APPENDIX C

FIELD DATA

This Appendix contains copies of the original field data sheets and the computer printouts used for volume, velocity, and isokinetic sampling calculations.

	PLANT & CITY	DATE	SAMPLING LOCATION	SAMPLE TYPE
1.	IMC, NORALYN, FLA	2/16/73	INLET - ROCK GRINDER	PARTICULATE

	RUN NO.	OPERATOR	AMB. TEMP (°F)	BAR. PRESS (IN.HG)	STATIC PRESS. (IN.H_2O)	FILTER NUMBER(S)	STACK INSIDE DIMEN. (INCHES)	PITOT TUBE
2.	7	N.K.	70	30.40	-13.5	73031, -29, -32, -33	1.175	.81

	PROBE LENGTH AND TYPE	NOZZLE I. D. INCHES	H_2O (%)	SAMPLE BOX NO.	METER BOX NO.	METER ΔH @	C FACTOR	PROBE HEAT SET	BOX HEAT SET.	REF. ΔP	RECORD DATA MINS.
3.	4' GLASS HEATED	0.180	10	3	4	1.67	0.85	260	280	2.30	3

SHEET 1 OF 2

EMISSION TESTING FIELD DATA

TRAVERSE POINT NUMBER	SAMPLING TIME, min	CLOCK TIME (24 hr CLOCK)	GAS METER READING (V_m), ft^3	VELOCITY HEAD (Δp_s), in.H_2O	ORIFICE PRESSURE DIFFERENTIAL (ΔH), in.H_2O DESIRED	ORIFICE PRESSURE DIFFERENTIAL (ΔH), in.H_2O ACTUAL	STACK TEMPERATURE (T_s), °F	DRY GAS METER TEMPERATURE INLET ($T_{m_{in}}$), °F	DRY GAS METER TEMPERATURE OUTLET ($T_{m_{out}}$), °F	PUMP VACUUM, in.Hg	SAMPLE BOX TEMPERATURE °F	IMPINGER TEMPERATURE °F
FILTER 73031	0	11:26	839.807									
B-1	3.	11:30	841.80	1.50	1.20	1.20	205	62	62	5.5	220	56
2	6.	11:33	843.70	1.50	1.20	1.20		66	62	5.5	230	55
3	9.	11:36	845.68	1.65	1.35	1.35		70	63	7.0	220	57
4	12.	11:39	847.73	1.70	1.38	1.38		74	63	8.0	220	59
5	15.	11:42	849.84	1.75	1.40	1.40		77	64	9.0	220	60
6	18.	11:45	851.88	1.85	1.50	1.50		81	65	10.0	250	62
7	21.	11:48	854.00	1.85	1.50	1.50		84	66	11.5	290	64
NEW FILTER 8	24.	11:51	856.12	1.90	1.55	1.55		86	67	14.5	230	64
9	27.	11:56	858.31	2.10	1.70	1.70		87	68	20.0	240	65
10	30.	11:59	860.93	2.30	1.85	1.85		90	70	6.0	250	66
73029 11	33.	12:02	863.30	2.30	1.85	1.85		91	70	7.0	280	66
12	36.	12:05	865.72	2.35	1.90	1.90		93	72	9.0	280	66
13	39.	12:08	867.97	2.20	1.75	1.75		95	72	10.5	275	66
NO FILTER 14	42.	12:11	870.30	2.20	1.75	1.75	205	95	73	12.0	275	66
A-1	45.	12:34	872.35	1.65	1.35	1.35	200	75	70	4.0	240	57
73032 2	48.	12:37	874.38	1.65	1.35	1.35		79	73	5.0	265	57
3	51.	12:40	876.49	1.70	1.38	1.38		82	73	7.0	235	57
4	54.	12:43	878.66	1.90	1.55	1.55		85	74	8.5	220	58
5	57.	12:46	880.86	1.85	1.50	1.50		87	74	11.0	270	58
6	60.	12:49	883.05	2.00	1.60	1.60		90	74	13.0	230	58
NO FILTER 73033 7	63.	12:52	885.27	1.85	1.50	1.50		92	75	18.0	250	59
8	66.	12:57	887.33	1.90	1.55	1.55		90	76	5.0	240	59
9	69.	13.00	889.47	1.75	1.40	1.40		92	76	5.5	280	60
10	72	13:03	891.55	1.70	1.38	1.38	200	94	77	6.0	250	60

LEAKAGE @ 15 "Hg = .008 CFM

GAS METER COR. 1.11

PEDCo - ENVIRONMENTAL
SUITE 8 • ATKINSON SQUARE
CINCINNATI, OHIO 45246

	PLANT & CITY	DATE	SAMPLING LOCATION	SAMPLE TYPE
1.	IMC, NORALYN, FLA	2/16/73	INLET - ROCK GRINDER	PARTICULATE

RUN NO.	OPERATOR	AMB. TEMP (°F)	BAR. PRESS (IN.HG)	STATIC PRESS. (IN.H_2O)	FILTER NUMBER(S)	STACK INSIDE DIMEN. (INCHES)	PITOT TUBE C
2. 7	NK	70	30.40	4		47.5 X	.83

PROBE LENGTH AND TYPE	NOZZLE I. D. INCHES	H_2O (%)	SAMPLE BOX NO.	METER BOX NO.	METER ΔH @	C FACTOR	PROBE HEAT SET	BOX HEAT SET.	REF. ΔP	RECORD DATA MINS.
3. 4' GLASS HEATED	.180	10	3	4	1.67			80		

SHEET 2 OF 2

EMISSION TESTING FIELD DATA

TRAVERSE POINT NUMBER	SAMPLING TIME, min	CLOCK TIME (24 hr CLOCK)	GAS METER READING (V_m), ft^3	VELOCITY HEAD (Δp_s), in.H_2O	ORIFICE PRESSURE DIFFERENTIAL (ΔH), in.H_2O DESIRED	ORIFICE PRESSURE DIFFERENTIAL (ΔH), in.H_2O ACTUAL	STACK TEMPERATURE (T_s), °F	DRY GAS METER TEMPERATURE INLET ($T_{m_{in}}$), °F	DRY GAS METER TEMPERATURE OUTLET ($T_{m_{out}}$), °F	PUMP VACUUM, in.Hg	SAMPLE BOX TEMPERATURE °F	IMPINGER TEMPERATURE °F
	0											
A 11	75.	13:06	893.65	1.75	1.40	1.40	200	94	77	7.0	250	58
A 12	78.	13:09	895.71	1.70	1.38	1.38	200	96	78	10.0	260	59
A 13	81.	13:12	897.84	1.80	1.45	1.45	200	97	79	11.5	250	59
A 14	84.	13.15	899.945	1.80	1.45	1.45	200	98	79	13.0	250	59

LEAKAGE @ _____ "Hg = _____ CFM

GAS METER COR. _____

PEDCo - ENVIRONMENTAL
SUITE 8 • ATKINSON SQUARE
CINCINNATI, OHIO 45246

ANALYTICAL DATA

PLANT IMC Moralyn

DATE 2-16-73

SAMPLING LOCATION Baghouse INLET

SAMPLE TYPE PARTICULATE

RUN NUMBER 1

SAMPLE BOX NUMBER

CLEAN-UP MAN J. Geiser

COMMENTS:

Impinger Tare = 460.3 ?

73003 - void Chloroform

477.7
460.3
17.4

FRONT HALF

S-73-002-

LABORATORY RESULTS

ACETONE WASH OF NOZZLE, PROBE, CYCLONE (BYPASS), FLASK, FRONT HALF OF FILTER HOLDER

CONTAINER 573 _____ mg

FILTER NUMBER 73031 ✓ _____

73029 ✓ _____

73032 ✓ _____

73033 ✓

CONTAINER 574 _____ mg

FRONT HALF SUBTOTAL _____ mg

BACK HALF

IMPINGER CONTENTS AND WATER WASH OF IMPINGERS, CONNECTORS, AND BACK HALF OF FILTER HOLDER

CONTAINER 575 _____ mg

ETHER-CHLOROFORM EXTRACTION 576 _____ mg

ACETONE WASH OF IMPINGERS, CONNECTORS, AND BACK HALF OF FILTER HOLDER

CONTAINER 577 _____ mg

BACK HALF SUBTOTAL _____ mg

TOTAL WEIGHT _____ mg

MOISTURE

IMPINGERS

FINAL VOLUME 263 ml

INITIAL VOLUME 200 ml

NET VOLUME 63 ml

SILICA GEL

FINAL WEIGHT 219.4 g _____ g _____ g

INITIAL WEIGHT 200.0 g _____ g _____ g

NET WEIGHT 19.4 g _____ g _____ g

B

63
19.4

TOTAL MOISTURE 82.4 g

PRELIMINARY VELOCITY TRAVERSE

PLANT IMC NORALYN FLA
DATE 2-15-73
LOCATION ROCK GRINDING INLET
STACK I.D.
BAROMETRIC PRESSURE, in. Hg 30.22
STACK GAUGE PRESSURE, in. H_2O
OPERATORS NK

P_s = -1.35 inches

TRAVERSE POINT NUMBER	VELOCITY HEAD (Δp_s), in. H_2O	STACK TEMPERATURE (T_s), °F
1,2 - B	1.65	(150) 207
3	1.60	(150)
4	1.60	(165)
5	1.60	(1.95)
6	1.70	(1.80)
7	1.85	(2.15)
8	1.85	(2.35)
9	1.85	(2.35)
10	1.85	(2.50)
11	1.90	(2.45)
12	1.85	(2.45)
13,14	1.70	(2.35)
1,2 - A	1.65	(150)
3	1.75	(150)
4	1.85	(165)
5	1.95	(1.95)
6	1.85	(2.10)
7	1.65	(2.15)
8	1.45	(2.35)
9	1.50	(2.35)
10	1.45	(2.50)
11	1.45	(2.45)
12	1.40	(2.45)
13,14	1.40	207
AVERAGE		

SCHEMATIC OF TRAVERSE POINT LAYOUT

TRAVERSE POINT NUMBER	VELOCITY HEAD (Δp_s), in. H_2O	STACK TEMPERATURE (T_s), °F
AVERAGE		

EPA (Dur) 233
4/72

PEDCo-ENVIRONMENTAL
SUITE 8 • ATKINSON SQUARE
CINCINNATI, OHIO 45246
513/771-4330

2.3

NOMOGRAPH DATA

PLANT IMC NORALYN

DATE 2-16-73

SAMPLING LOCATION ROCK GRINDING INLET

RUN # 7 PARTICULATE
8
9

CALIBRATED PRESSURE DIFFERENTIAL ACROSS ORIFICE, in. H_2O	$\Delta H_@$	1.67
AVERAGE METER TEMPERATURE (AMBIENT + 20 °F), °F	$T_{m_{avg.}}$	85
PERCENT MOISTURE IN GAS STREAM BY VOLUME	B_{wo}	10
BAROMETRIC PRESSURE AT METER, in. Hg	P_m	
STATIC PRESSURE IN STACK, in. Hg ($P_m \pm 0.073$ x STACK GAUGE PRESSURE in in. H_2O)	P_s	
RATIO OF STATIC PRESSURE TO METER PRESSURE	P_s/P_m	≈ 1.0
AVERAGE STACK TEMPERATURE, °F	$T_{s_{avg.}}$	175
AVERAGE VELOCITY HEAD, in. H_2O	$\Delta p_{avg.}$	
MAXIMUM VELOCITY HEAD, in. H_2O	$\Delta p_{max.}$	
C FACTOR	0.83	
CALCULATED NOZZLE DIAMETER, in.		
ACTUAL NOZZLE DIAMETER, in.	.180	
REFERENCE Δp, in. H_2O	2.30	

	PLANT & CITY	DATE	SAMPLING LOCATION	SAMPLE TYPE
1.	IMC NORALYN, FLA.	02/16/73	GRINDER BAGHOUSE - OUTLET	PARTICULATE

RUN NO.	OPERATOR	AMB. TEMP (°F)	BAR. PRESS (IN.HG)	STATIC PRESS. (IN.H_2O)	FILTER NUMBER(S)	STACK INSIDE DIMEN. (INCHES)	PITOT TUBE C
7	O'CONNOR - MEER	62	30.40	3.0	73-008	12.00 X 14.00	.83

PROBE LENGTH AND TYPE	NOZZLE I. D. INCHES	H_2O (%)	SAMPLE BOX NO.	METER BOX NO.	METER ΔH @	C FACTOR	PROBE HEAT SET	BOX HEAT SET.	REF. ΔP	RECORD DATA MINS.
4FT GLASS - HEATED	0.277	10	A	1	1.55	0.8	80	.8	.44	5

4FT IS OVERALL LENGTH
NOT EFFECTIVE LENGTH

EMISSION TESTING FIELD DATA

TRAVERSE POINT NUMBER	SAMPLING TIME, min	CLOCK TIME (24 hr CLOCK)	GAS METER READING (V_m), ft^3	VELOCITY HEAD (Δp_s), in.H_2O	ORIFICE PRESSURE DIFFERENTIAL (ΔH), in.H_2O DESIRED	ORIFICE PRESSURE DIFFERENTIAL (ΔH), in.H_2O ACTUAL	STACK TEMPERATURE (T_s), °F	DRY GAS METER TEMPERATURE INLET ($T_{m_{in}}$), °F	DRY GAS METER TEMPERATURE OUTLET ($T_{m_{out}}$), °F	PUMP VACUUM, in.Hg	SAMPLE BOX TEMPERATURE °F	IMPINGER TEMPERATURE °F
	0	1125	299.257									
A-1	05	1130	303.875	.62	2.50	2.50	160	70	66	9.5	235	70
2	10	1135	8.280	.52	2.18	2.18	160	76	66	7.8	235	72
3	15	1140	12.785	.54	2.22	2.22	160	83	67	8.2	240	75
4	20	1145	7.860	.58	2.41	2.41	160	93	70	8.8	225	78
5	25	1150	22.100	.59	2.45	2.45	160	97	71	9.0	235	78
6	30	1155	326.728	.55	2.28	2.28	165	99	72	8.2	240	80
B-1	35	1203	31.610	.62	2.59	2.59	160	101	75	9.5	240	80
2	40	08	6.130	.55	2.28	2.28	165	103	77	8.0	235	80
3	45	13	40.810	.57	2.38	2.38	165	105	78	8.5	240	82
4	50	18	5.625	.60	2.50	2.50	165	106	78	9.0	245	83
5	55	23	50.610	.62	2.59	2.59	160	107	79	9.5	240	83
6	60	1228	355.330	.57	2.38	2.38	160	109	80	8.5	240	82
C-1	65	1233	60.625	.72	3.0	3.0	160	110	82	13.0	240	84
2	70	38	5.675	.65	2.69	2.69	165	112	83	11.0	240	81
3	75	43	70.750	.66	2.72	2.72	160	113	84	11.5	240	78
4	80	48	5.960	.68	2.82	2.82	160	116	85	12.2	245	76
5	85	53	81.075	.66	2.72	2.72	160	117	87	11.8	240	78
6	90	1258	386.135	.65	2.69	2.69	160	117	87	11.5	245	78
D-1	95	1303	91.305	.72	3.0	3.0	160	117	88	13.8	245	79
2	100	08	6.540	.65	2.69	2.69	160	118	89	12.0	245	75
3	105	13	401.475	.65	2.69	2.69	160	118	89	12.0	240	73
4	110	18	6.565	.66	2.72	2.72	160	118	89	12.2	245	73
5	115	23	11.660	.64	2.65	2.65	160	119	90	12.0	240	75
6	120	1328	416.612	.61	2.52	2.52	160	120	91	11.2	240	76

LEAKAGE @ 15 "Hg = .01 CFM

GAS METER COR. _____ 7 8 9 10 11

(OVER)

PEDCo - ENVIRONMENTAL
SUITE 8 • ATKINSON SQUARE
CINCINNATI, OHIO 45246

There is another filter that goes with this. Joe Kruger should have the number. It wasn't used, but got wet during leak test.

PEDCo-ENVIRONMENTAL
SUITE 8 • ATKINSON SQUARE
CINCINNATI, OHIO 45246
513/771-4330

NOMOGRAPH DATA

PLANT IMC NORALYN FLA.

DATE 2-16-73

SAMPLING LOCATION GRINDING BAGHOUSE OUTLET

		TEST 7-8-9
CALIBRATED PRESSURE DIFFERENTIAL ACROSS ORIFICE, in. H_2O	$\Delta H_@$	1.55
AVERAGE METER TEMPERATURE (AMBIENT + 20 °F), °F	$T_{m_{avg.}}$	90
PERCENT MOISTURE IN GAS STREAM BY VOLUME	B_{wo}	10
BAROMETRIC PRESSURE AT METER, in. Hg	P_m	30.40
STATIC PRESSURE IN STACK, in. Hg ($P_m \pm 0.073$ x STACK GAUGE PRESSURE in in. H_2O)	P_s	.021
RATIO OF STATIC PRESSURE TO METER PRESSURE	P_s/P_m	1
AVERAGE STACK TEMPERATURE, °F	$T_{s_{avg.}}$	162
AVERAGE VELOCITY HEAD, in. H_2O	$\Delta p_{avg.}$	.585
MAXIMUM VELOCITY HEAD, in. H_2O	$\Delta p_{max.}$	.71
C FACTOR	0.8	
CALCULATED NOZZLE DIAMETER, in.	.258	
ACTUAL NOZZLE DIAMETER, in.	.277	
REFERENCE Δp, in. H_2O	.44	

TRAVERSE POINT LOCATION FOR CIRCULAR DUCTS

PLANT IMC Roralyn
DATE 2-15-73
SAMPLING LOCATION Grinder Baghouse outlet
SIDE OF FAR WALL TO
OUTSIDE OF NIPPLE, (DISTANCE A)
INSIDE OF NEAR WALL TO
OUTSIDE OF NIPPLE, (DISTANCE B)
STACK I.D., (DISTANCE A - DISTANCE B)
NEAREST UPSTREAM DISTURBANCE 1.0 Dia
NEAREST DOWNSTREAM DISTURBANCE 4.5 Dia
CALCULATOR C.E. Ruby

Sampling points - 36 x 0.67 = 24 @ 5 min 120 min Total

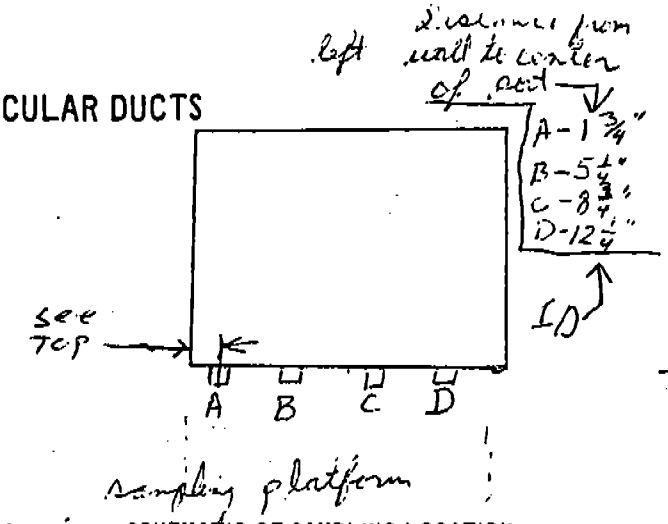

SCHEMATIC OF SAMPLING LOCATION

TRAVERSE POINT NUMBER	FRACTION OF STACK I.D.	STACK I.D.	PRODUCT OF COLUMNS 2 AND 3 (TO NEAREST 1/8 INCH)	DISTANCE B	TRAVERSE POINT LOCATION FROM OUTSIDE OF NIPPLE (SUM OF COLUMNS 4 & 5)
1			1"	1/4"	1 1/4"
2			3"		3 1/4"
3			5"		5 1/4"
4			7"		7 1/4"
5			9"		9 1/4"
6			11"	1/4"	11 1/4"

EPA Dur) 232
4/72

PRELIMINARY VELOCITY TRAVERSE

PLANT IMC MORALYN FLA
DATE 2/15/73
LOCATION ~~ROCK DRYER~~ OUTLET GRINDER BAGHOUSE
STACK I.D. 12 X 14
BAROMETRIC PRESSURE, in. Hg 30.22
STACK GAUGE PRESSURE, in. H_2O .30
OPERATORS O'CONNOR - MEER

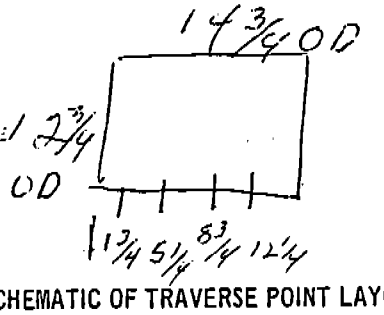

SCHEMATIC OF TRAVERSE POINT LAYOUT

2" 5 1/2 @ 12 1/2 OD

TRAVERSE POINT NUMBER	VELOCITY HEAD (Δp_s), in. H_2O	STACK TEMPERATURE (T_s), °F
A 1	.54 .52	
2	.51 .51	
3	.52 .52	165
4	.54 .57	
5	.55 .54	
6	.52	
B 1	.65	
2	.61	
3	.59	
4	.62	165
5	.60	
6	.53	
C 1	.69	
2	.64	
3	.63	
4	.61	160
5	.59	
6	.53	
D 1	.71	
2	.66	
3	.62	160
4	.59	
5	.57	
6	.47	
AVERAGE	.585	162.5

TRAVERSE POINT NUMBER	VELOCITY HEAD (Δp_s), in. H_2O	STACK TEMPERATURE (T_s), °F
AVERAGE		

EPA (Dur) 233
4/72

STATIC + .30

(OVER)

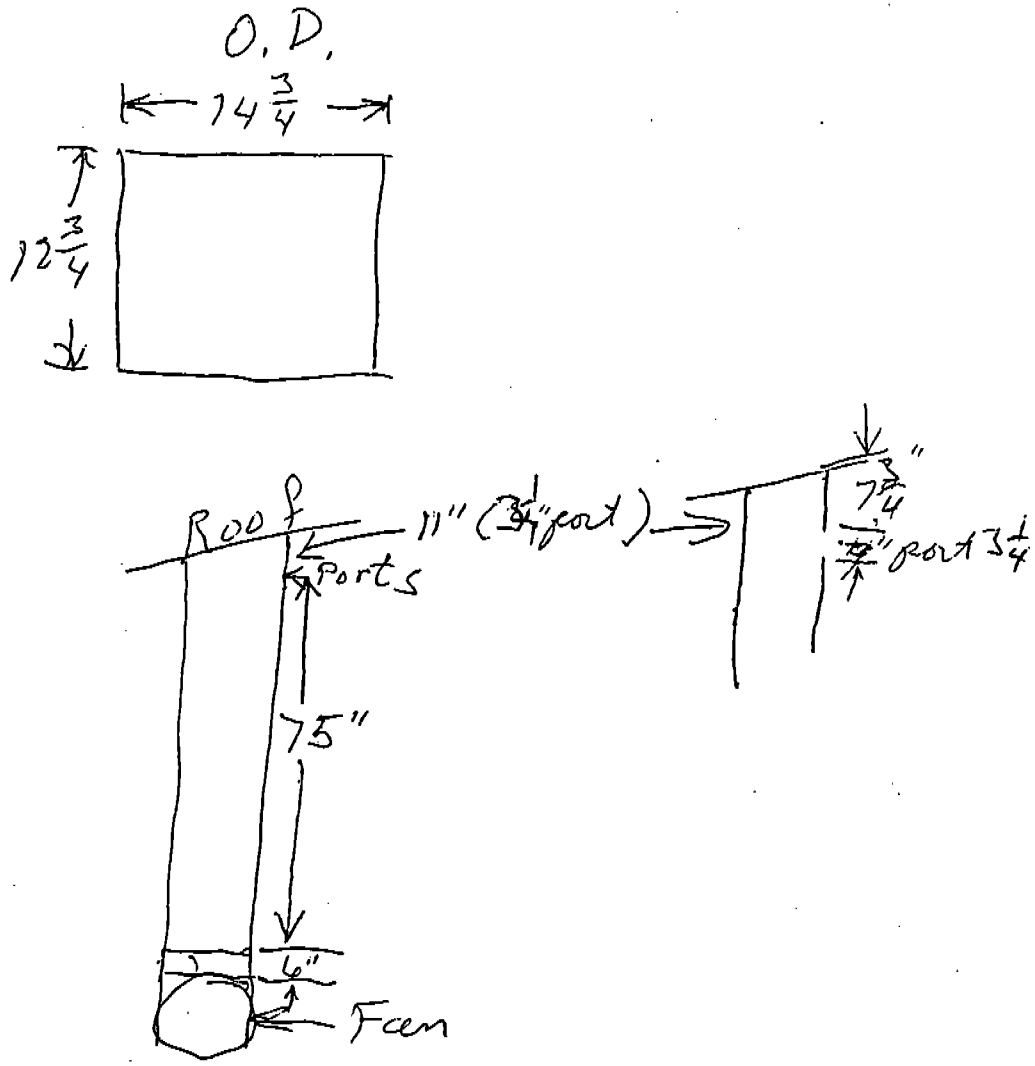
O.D.
14 3/4
12 3/4
Roof
11" (3 1/4" port)
7 3/4"
3 1/4" port
Ports
75"
6"
Fan

ANALYTICAL DATA

PLANT IMC - Noralyn

DATE 2-16-73

SAMPLING LOCATION BAGHOUSE OUTLET

SAMPLE TYPE PARTICULATE

RUN NUMBER 1

SAMPLE BOX NUMBER

CLEAN-UP MAN J. Geiger

COMMENTS:

BAGHOUSE TARE = 483.9 g.

528.3
483.9
44.4

FRONT HALF

S-73-002-

LABORATORY RESULTS

ACETONE WASH OF NOZZLE, PROBE, CYCLONE (BYPASS), FLASK, FRONT HALF OF FILTER HOLDER — CONTAINER 579 _____ mg

FILTER NUMBER 73008 ✓ — CONTAINER 578 _____ mg

FRONT HALF SUBTOTAL _____ mg

BACK HALF

IMPINGER CONTENTS AND WATER WASH OF IMPINGERS, CONNECTORS, AND BACK HALF OF FILTER HOLDER — CONTAINER 580 _____ mg

ETHER-CHLOROFORM EXTRACTION 581 _____ mg

ACETONE WASH OF IMPINGERS, CONNECTORS, AND BACK HALF OF FILTER HOLDER — CONTAINER 582 _____ mg

BACK HALF SUBTOTAL _____ mg

TOTAL WEIGHT _____ mg

MOISTURE

272
20 ml
292

IMPINGERS

FINAL VOLUME 292 ml

INITIAL VOLUME 200 ml

NET VOLUME 92 ml

SILICA GEL

FINAL WEIGHT	244.4 g	_____ g	_____ g
INITIAL WEIGHT	200.0 g	_____ g	_____ g
NET WEIGHT	44.4 g	_____ g	_____ g

44.4
92

TOTAL MOISTURE 136.4 g

	PLANT & CITY	DATE	SAMPLING LOCATION	SAMPLE TYPE
1.	IMC, NORALYN FLA.	2/16/73	INLET - ROCK GRINDER	PARTICULATE

	RUN NO.	OPERATOR	AMB. TEMP (°F)	BAR. PRESS (IN.HG)	STATIC PRESS. (IN.H_2O)	FILTER NUMBER(S)	STACK INSIDE DIMEN. (INCHES)	PITOT TUBE
2.	8	N.K.	75	30.40	-1.35	73010, -11, -13,	147.5 X	.8

	PROBE LENGTH AND TYPE	NOZZLE I. D. INCHES	H_2O (%)	SAMPLE BOX NO.	METER BOX NO.	METER ΔH @	C FACTOR	PROBE HEAT SET	BOX HEAT SET.	REF. ΔP	RECORD DATA MINS.
3.	4' GLASS HEATED	* 0.180	10	3	4	1.67	0.83	80	250	2.30	30

SHEET 1 OF 2

EMISSION TESTING FIELD DATA

TRAVERSE POINT NUMBER	SAMPLING TIME, min	CLOCK TIME (24 hr CLOCK)	GAS METER READING (V_m), ft^3	VELOCITY HEAD (Δp_s), in.H_2O	ORIFICE PRESSURE DIFFERENTIAL (ΔH), in.H_2O DESIRED	ORIFICE PRESSURE DIFFERENTIAL (ΔH), in.H_2O ACTUAL	STACK TEMPERATURE (T_s), °F	DRY GAS METER TEMPERATURE INLET ($T_{m_{in}}$), °F	DRY GAS METER TEMPERATURE OUTLET ($T_{m_{out}}$), °F	PUMP VACUUM, in.Hg	SAMPLE BOX TEMPERATURE °F	IMPINGER TEMPERATURE °F
FILT 73010	0	1404	900.276									
A-1	3	1406 down because of outlet problems 1441 back on line	902.20	1.65	1.35	1.35	200	74	73	7.0	260	62
2	6	1446	904.21	1.65	1.35	1.35		70	70	7.0	240	70
3	9	1449	906.24	1.55	1.25	1.25		75	71	7.0	250	56
4	12	1452	908.34	1.80	1.45	1.45		78	72	9.0	235	59
5	15	1455	missed	1.90	1.55	1.55		81	72	10.5	235	60
6	18	1458	912.80	2.00	1.60	1.60		86	72	11.5	250	60
7	21	1501	915.03	2.00	1.60	1.60	200	88	73	13.5	235	62
8	24	1504	917.19	1.90	1.55	1.55	205	90	73	14.5	235	64
9	27	1507	919.34	1.85	1.50	1.50		93	74	16.0	250	64
10	30	1510	921.45	1.70	1.38	1.38		95	75	16.0	250	65
11	33	1513	923.50	1.75	1.40	1.40		96	76	17.5	250	65
FILTER 73011 12	36	1516	925.57	1.75	1.40	1.40		97	77	19.5	220	63
13	39	1521	927.76	1.95	1.55	1.55		92	76	6.0	220	65
14	42	1524	929.91	1.95	1.55	1.55	205	96	78	6.5	230	60
B-1	45	1554	931.84	1.55	1.25	1.25	208	76	74	6.5	240	58
2	48	1557	933.73	1.45	1.15	1.15		79	75	7.0	260	59
3	51	1600	missed	1.55	1.25	1.25		82	76	8.0	260	61
4	54	1603	937.60	1.55	1.25	1.25		84	76	9.5	230	61
5	57	1606	939.61	1.70	1.38	1.38		87	76	12.0	230	61
FILTER 73013 6	60	1609	941.75	1.75	1.40	1.40		90	76	14.0	240	62
7	63	1612	943.68	2.00	1.60	1.60		91	77	12.0	240	62
8	66	1621	945.92	2.00	1.60	1.60		87	76	6.0	250	61
9	69	1624	948.20	2.15	1.75	1.75		92	77	7.0	240	60
10	72	1627	950.52	2.15	1.75	1.75	208	95	79	9.0	270	61

LEAKAGE @ 15 "Hg = .015 CFM

GAS METER COR. 1.11

* Smaller nozzle mistakenly inserted on probe.

PEDCo - ENVIRONMENTAL
SUITE 8 • ATKINSON SQUARE
CINCINNATI, OHIO 45246

	PLANT & CITY	DATE	SAMPLING LOCATION	SAMPLE TYPE
1.	IMC, NORALYN, FLA	2/16/73	INLET - ROCK GRINDER	

	RUN NO.	OPERATOR	AMB. TEMP (°F)	BAR. PRESS (IN.HG)	STATIC PRESS. (IN.H_2O)	FILTER NUMBER(S)	STACK INSIDE DIMEN. (INCHES)	PITOT TUBE
2.	B	N.K.	75	30.40				

	PROBE LENGTH AND TYPE	NOZZLE I. D. INCHES	H_2O (%)	SAMPLE BOX NO.	METER BOX NO.	METER ΔH @	C FACTOR	PROBE HEAT SET	BOX HEAT SET.	REF. ΔP	RECORD DATA MINS.
3.	4' GLASS HEATED			3	4						

SHEET 2 of 2

EMISSION TESTING FIELD DATA

TRAVERSE POINT NUMBER	SAMPLING TIME, min	CLOCK TIME (24 hr CLOCK)	GAS METER READING (V_m), ft^3	VELOCITY HEAD (Δp_s), in.H_2O	ORIFICE PRESSURE DIFFERENTIAL (ΔH), in.H_2O DESIRED	ORIFICE PRESSURE DIFFERENTIAL (ΔH), in.H_2O ACTUAL	STACK TEMPERATURE (T_s), °F	DRY GAS METER TEMPERATURE INLET ($T_{m_{in}}$), °F	DRY GAS METER TEMPERATURE OUTLET ($T_{m_{out}}$), °F	PUMP VACUUM, in.Hg	SAMPLE BOX TEMPERATURE °F	IMPINGER TEMPERATURE °F
	0											
A-11	75.	1630	952.83	2.15	1.75	1.75	208	96	79	10.0	270	61
A-12	78.	1641	955.14	2.15	1.75	1.75	208	97	80	12.0	270	63
A-13	81.	1644	957.22	1.95	1.55	1.55	208	86	77	14.5	260	66
A-14	84.	1647	959.371	2.10	1.65	1.65	208	90	80	17.5	260	66

@ 1635 process is down - grinder is grinding something and it isn't rock ... its a 2 & 4 !!!

@ 1644 we are going again

LEAKAGE @ _____ "Hg = _____ CFM

GAS METER COR. _____

PEDCo - ENVIRONMENTAL
SUITE 8 • ATKINSON SQUARE
CINCINNATI, OHIO 45246

ANALYTICAL DATA

PLANT IMC - Noralyn

DATE 2-16-73

SAMPLING LOCATION BAGHOUSE INLET

SAMPLE TYPE PARTICULATE

RUN NUMBER 2

SAMPLE BOX NUMBER

CLEAN-UP MAN J. [illegible]

COMMENTS:

464.0
Imp Tare - 443.8
20.2

FRONT HALF

LABORATORY RESULTS

ACETONE WASH OF NOZZLE, PROBE, CYCLONE (BYPASS), FLASK, FRONT HALF OF FILTER HOLDER — CONTAINER S-73-002-585 _____ mg

FILTER NUMBER 73010 ✓ _____
73011 ✓ _____
73013 ✓ _____

CONTAINER 586 _____ mg

FRONT HALF SUBTOTAL _____ mg

BACK HALF

IMPINGER CONTENTS AND WATER WASH OF IMPINGERS, CONNECTORS, AND BACK HALF OF FILTER HOLDER — CONTAINER 587 _____ mg

ETHER-CHLOROFORM EXTRACTION 588 _____ mg

ACETONE WASH OF IMPINGERS, CONNECTORS, AND BACK HALF OF FILTER HOLDER — CONTAINER 589 _____ mg

BACK HALF SUBTOTAL _____ mg

TOTAL WEIGHT _____ mg

MOISTURE

IMPINGERS

FINAL VOLUME	258	ml
INITIAL VOLUME	200	ml
NET VOLUME	58	ml

SILICA GEL

FINAL WEIGHT	220.2	g		g		g
INITIAL WEIGHT	200.0	g		g		g
NET WEIGHT	20.2	g		g		g

58
20.2

TOTAL MOISTURE 78.2 g

E

	PLANT & CITY	DATE	SAMPLING LOCATION	SAMPLE TYPE
1.	IMC NORALYN, FLA.	02/16/73	GRINDER BAGHOUSE - OUTLET	PARTICULATE

RUN NO.	OPERATOR	AMB. TEMP (°F)	BAR. PRESS (IN.HG)	STATIC PRESS. (IN.H_2O)	FILTER NUMBER(S)	STACK INSIDE DIMEN. (INCHES)	PITOT TUBE
2. B	O'CONNOR - MEER	70	30.40	-.30	73047, 73030	1.21 x 1.21	.8

PROBE LENGTH AND TYPE	NOZZLE I. D. INCHES	H_2O (%)	SAMPLE BOX NO.	METER BOX NO.	METER ΔH @	C FACTOR	PROBE HEAT SET	BOX HEAT SET.	REF. ΔP	RECORD DATA MINS.
3. 4 FT GLASS - HEATED	0.277	10	1	X1	~~1.49~~ 1.55	0.8	80	250	.44	5

EMISSION TESTING FIELD DATA

TRAVERSE POINT NUMBER	SAMPLING TIME, min	CLOCK TIME (24 hr CLOCK)	GAS METER READING (V_m), ft^3	VELOCITY HEAD (Δp_s), in.H_2O	ORIFICE PRESSURE DIFFERENTIAL (ΔH), in.H_2O DESIRED	ORIFICE PRESSURE DIFFERENTIAL (ΔH), in.H_2O ACTUAL	STACK TEMPERATURE (T_s), °F	DRY GAS METER TEMPERATURE INLET ($T_{m_{in}}$), °F	DRY GAS METER TEMPERATURE OUTLET ($T_{m_{out}}$), °F	PUMP VACUUM, in.Hg	SAMPLE BOX TEMPERATURE °F	IMPINGER TEMPERATURE °F
	0	1444	417.544									
A 1	5.	49	21.635	.50	2.05	2.05	160	86	80	6.5	265	67
2	10.	50	25.920	.49	2.03	2.03	160	91	80	6.5	260	72
3	15.	59	30.415	.52	2.15	2.15	165	98	81	7.0	260	82
4	20.	1504	35.130	.57	2.38	2.38	160	104	82	8.0	270	80
5	25.	09	40.170	.64	2.65	2.65	160	109	83	9.0	265	81
6	30.	14	45.084	.60	2.50	2.50	165	111	85	8.5	265	81
B-1	35.	1522	50.005	.64	2.65	2.65	160	109	86	9.0	245	75
2	40.	27	54.860	.59	2.45	2.45	160	111	87	8.0	260	75
3	45.	32	59.685	.60	2.50	2.50	160	112	87	7.5	280	70
4	50.	37	64.690	.64	2.65	2.65	160	114	88	8.8	275	76
5	55.	42	69.685	.63	2.61	2.61	160	115	89	8.8	270	77
6	60.	1547	474.560	.59	2.45	2.45	160	116	90	8.5	260	77
C-1	65.	1553	79.510	.64	2.65	2.65	160	114	90	9.0	270	76
2	70.	58	84.390	.60	2.50	2.50	160	115	90	8.5	250	74
3	75.	1603	89.235	.60	2.50	2.50	165	116	91	8.5	280	72
4	80.	08	94.180	.63	2.61	2.61	160	117	91	8.9	260	72
5	85.	13	499.075	.61	2.52	2.52	160	117	92	8.8	275	76
6	90.	1618	503.940	.59	2.45	2.45	165	117	92	8.5	300	81
D-1	95.	23	09.280	.75	3.10	3.10	160	112	91	11.0	275	71
2	100.	28	14.270	.62	2.59	2.59	160	115	91	9.0	275	70
3	105.	33	19.185	.61	2.52	2.52	165	116	91	8.9	275	68
4	110.	1644	23.985	.57	2.38	2.38	160	116	91	8.5	275	67
5	115.	1649	28.760	.57	2.38	2.38	160	107	89	8.5	275	67
6	120.	1654	533.543	.55	2.28	2.28	160	110	89	8.5	275	68

LEAKAGE @ 15 "Hg = 0 CFM

GAS METER COR. ___

(OVER)

PEDCo - ENVIRONMENTAL
SUITE 8 • ATKINSON SQUARE
CINCINNATI, OHIO 45246

(1) didnt take top off of nozzle. Blew water back to filter and silica gel over into next impinger. Poured water back, changed filters and the silica gel impinger and also the 3rd impinger. Saved everything to be included in the test. Took 0.7 minutes. Started time over and new ~~starting~~ initial gas meter ~~reading~~ reading.

(7) - at 1635 or 3.2 minutes into 04 we cut off test, Trouble with process, Orders of Gene Riley Started again at 1642

ANALYTICAL DATA

PLANT IMC Marilyn

DATE 2-16-77

SAMPLING LOCATION BAGHOUSE OUTLET

SAMPLE TYPE PARTICULATE

RUN NUMBER 2

SAMPLE BOX NUMBER

CLEAN-UP MAN J. Geiger

COMMENTS: 498.4
Imp. Tare = 444.6
53.8

Filter 73007 void
73007
73003

FRONT HALF

ACETONE WASH OF NOZZLE, PROBE, CYCLONE (BYPASS), FLASK, FRONT HALF OF FILTER HOLDER

FILTER NUMBER 73030 ✓
73012

LABORATORY RESULTS

S-73-002-
CONTAINER 590 _____ mg

CONTAINER 591 _____ mg

FRONT HALF SUBTOTAL _____ mg

BACK HALF

IMPINGER CONTENTS AND WATER WASH OF IMPINGERS, CONNECTORS, AND BACK HALF OF FILTER HOLDER

CONTAINER 592 _____ mg

ETHER-CHLOROFORM EXTRACTION 593 _____ mg

ACETONE WASH OF IMPINGERS, CONNECTORS, AND BACK HALF OF FILTER HOLDER

CONTAINER 594 _____ mg

BACK HALF SUBTOTAL _____ mg

TOTAL WEIGHT _____ mg

MOISTURE

IMPINGERS

FINAL VOLUME	299 ml		
INITIAL VOLUME	200 ml		
NET VOLUME	99 ml		

SILICA GEL

FINAL WEIGHT	253.8 g	_____ g	_____ g
INITIAL WEIGHT	200.0 g	_____ g	_____ g
NET WEIGHT	53.8 g	_____ g	_____ g

53.8
99

TOTAL MOISTURE 152.8 g

G

PLANT & CITY	DATE	SAMPLING LOCATION	SAMPLE TYPE
1. IMC NORALYN, FLA	2/16/73	INLET - ROCK GRINDER	PARTICULATE

RUN NO.	OPERATOR	AMB. TEMP (°F)	BAR. PRESS (IN.HG)	STATIC PRESS. (IN.H_2O)	FILTER NUMBER(S)	STACK INSIDE DIMEN. (INCHES)	PITOT TUBE
2. 9	N.K.	75	30.34	-13.5	73036, -14, -15	17.5	.8

PROBE LENGTH AND TYPE	NOZZLE I. D. INCHES	H_2O (%)	SAMPLE BOX NO.	METER BOX NO.	METER ΔH @	C FACTOR	PROBE HEAT SET	BOX HEAT SET.	REF. ΔP	RECORD DATA MINS.
3. 4' GLASS HEATED	0.180	10	3	4	1.67	0.83	80	250	2.30	3

SHEET 1 OF 2

EMISSION TESTING FIELD DATA

TRAVERSE POINT NUMBER	SAMPLING TIME, min	CLOCK TIME (24 hr CLOCK)	GAS METER READING (V_m), ft^3	VELOCITY HEAD (Δp_s), in.H_2O	ORIFICE PRESSURE DIFFERENTIAL (ΔH), in.H_2O DESIRED	ORIFICE PRESSURE DIFFERENTIAL (ΔH), in.H_2O ACTUAL	STACK TEMPERATURE (T_s), °F	DRY GAS METER TEMPERATURE INLET ($T_{m_{in}}$), °F	DRY GAS METER TEMPERATURE OUTLET ($T_{m_{out}}$), °F	PUMP VACUUM, in.Hg	SAMPLE BOX TEMPERATURE °F	IMPINGER TEMPERATURE °F
FILTER 73036	0	1746	959.559									
B-1	3.	1749	961.62	1.85	1.50	1.50	200	70	70	5.0	240	48
2	6.	1752	963.77	1.85	1.50	1.50		72	70	6.0	240	50
3	9.	1755	966.55	1.90	1.55	1.55		75	70	6.5	250	53
4	12.	1758	968.16	2.00	1.60	1.60		79	70	7.0	250	54
5	15.	1801	970.34	1.95	1.55	1.55		81	70	7.0	235	54
6	18.	1804	972.55	1.90	1.55	1.55		84	70	8.0	290	55
7	21.	1807	974.66	1.90	1.55	1.55		86	71	9.0	240	54
8	24.	1810	976.80	1.95	1.55	1.55		88	72	11.0	290	55
9	27.	1813	979.05	2.10	1.70	1.70		90	73	13.0	250	57
FILTER 73014 10	30.	1816	missed	2.35	1.90	1.90		92	73	16.0	240	58
11	33.	1819	983.87	2.40	1.95	1.95		94	74	18.5	240	60
12	36.	1826	986.24	2.40	1.95	1.95		88	73	5.5	250	62
13	39.	1829	988.69	2.40	1.95	1.95		92	74	7.0	245	56
14	42.	1832	991.06	2.30	1.85	1.85		93	74	8.0	230	56
A-1	45.	1857	993.12	1.80	1.45	1.45		74	70	6.0	230	52
2	48.	1900	995.17	1.80	1.45	1.45		76	72	6.5	225	52
3	51.	1903	997.38	2.00	1.60	1.60		78	72	8.5	240	51
4	54.	1906	999.66	2.10	1.70	1.70		81	72	10.5	245	50
5	57.	1909	1001.05	2.10	1.70	1.70		84	72	12.5	220	53
6	60.	1912	1004.14	2.00	1.60	1.60		87	72	13.5	225	54
FILTER 73015 7	63.	1915	1006.37	2.00	1.60	1.60		78	72	15.5	220	55
8	66.	1918	1008.58	2.00	1.60	1.60		90	73	16.5	280	56
9	69.	1924	1010.80	2.00	1.60	1.60		86	72	5.0	230	57
10	72.	1927	1012.97	2.05	1.65	1.65	2.00	88	73	6.5	230	56

LEAKAGE @ 15 "Hg = .015 CFM

GAS METER COR. 1.1

* Broke an impinger connection while moving parts
← 2nd impinger

PEDCo - ENVIRONMENTAL
SUITE 8 • ATKINSON SQUARE
CINCINNATI, OHIO 45246

PLANT & CITY	DATE	SAMPLING LOCATION	SAMPLE TYPE
1. IMC, NORALYN, FLORIDA	2/16/73	INLET - ROCK GRINDER	PARTICULATE

RUN NO.	OPERATOR	AMB. TEMP (°F)	BAR. PRESS (IN.HG)	STATIC PRESS. (IN.H_2O)	FILTER NUMBER(S)	STACK INSIDE DIMEN. (INCHES)	PITOT TUBE
2. 9	N.K.	75	30.34				

PROBE LENGTH AND TYPE	NOZZLE I. D. INCHES	H_2O (%)	SAMPLE BOX NO.	METER BOX NO.	METER ΔH @	C FACTOR	PROBE HEAT SET	BOX HEAT SET.	REF. ΔP	RECORD DATA MINS.
3.	.180	10								

SHEET 2 of 2

EMISSION TESTING FIELD DATA

TRAVERSE POINT NUMBER	SAMPLING TIME, min	CLOCK TIME (24 hr CLOCK)	GAS METER READING (V_m), ft^3	VELOCITY HEAD (Δp_s), in.H_2O	ORIFICE PRESSURE DIFFERENTIAL (ΔH), in.H_2O DESIRED	ORIFICE PRESSURE DIFFERENTIAL (ΔH), in.H_2O ACTUAL	STACK TEMPERATURE (T_s), °F	DRY GAS METER TEMPERATURE INLET ($T_{m_{in}}$), °F	DRY GAS METER TEMPERATURE OUTLET ($T_{m_{out}}$), °F	PUMP VACUUM, in.Hg	SAMPLE BOX TEMPERATURE °F	IMPINGER TEMPERATURE °F
	0											
A-11	75.	1930	1015.24	2.10	1.70	1.70	200	89	73	7.5	240	55
A-12	78.	1933	1017.58	2.10	1.70	1.70	200	90	74	9.0	245	58
A-13	81.	1936	1019.85	2.10	1.70	1.70	200	93	74	10.5	250	58
A-14	84.	1939	1022.114	2.10	1.70	1.70	200	95	74	13.0	250	58

LEAKAGE @ _____ "Hg = _____ CFM

GAS METER COR. _____

PEDCo - ENVIRONMENTAL
SUITE 8 • ATKINSON SQUARE
CINCINNATI, OHIO 45246

ANALYTICAL DATA

PLANT IMC - Noralyn

DATE 2-16-73

SAMPLING LOCATION BAGHOUSE INLET

SAMPLE TYPE PARTICULATE

RUN NUMBER 3

SAMPLE BOX NUMBER

CLEAN-UP MAN J. Geiger

COMMENTS:

Impinger Tare = 463.9
444.0
19.9

FRONT HALF

S-73-002-

LABORATORY RESULTS

ACETONE WASH OF NOZZLE, PROBE, CYCLONE (BYPASS), FLASK, FRONT HALF OF FILTER HOLDER — CONTAINER 597 _____ mg

FILTER NUMBER 73035 _____

73014 _____

73015 _____

CONTAINER 598 _____ mg

FRONT HALF SUBTOTAL _____ mg

BACK HALF

IMPINGER CONTENTS AND WATER WASH OF IMPINGERS, CONNECTORS, AND BACK HALF OF FILTER HOLDER — CONTAINER 599 _____ mg

ETHER-CHLOROFORM EXTRACTION 600 _____ mg

ACETONE WASH OF IMPINGERS, CONNECTORS, AND BACK HALF OF FILTER HOLDER — CONTAINER 601 _____ mg

BACK HALF SUBTOTAL _____ mg

TOTAL WEIGHT _____ mg

MOISTURE

IMPINGERS

FINAL VOLUME 263 ml

INITIAL VOLUME 200 ml

NET VOLUME 63 ml

SILICA GEL

FINAL WEIGHT	219.9 g	_____ g	_____ g
INITIAL WEIGHT	200.0 g	_____ g	_____ g
NET WEIGHT	19.9 g	_____ g	_____ g

D

19.9
63

TOTAL MOISTURE 82.9 g

	PLANT & CITY	DATE	SAMPLING LOCATION	SAMPLE TYPE
1.	INC NORALYN, FLA.	02/16/73	GRINDER BAGHOUSE - OUTLET	PARTICULATE

RUN NO.	OPERATOR	AMB. TEMP (°F)	BAR. PRESS (IN.HG)	STATIC PRESS. (IN.H_2O)	FILTER NUMBER(S)	STACK INSIDE DIMEN. (INCHES)	PITOT TUBE
9	O'CONNOR - MEER	61.5	30.40	-3.0	73034	12.00 x 14.00	.85

PROBE LENGTH AND TYPE	NOZZLE I. D. INCHES	H_2O (%)	SAMPLE BOX NO.	METER BOX NO.	METER ΔH @	C FACTOR	PROBE HEAT SET	BOX HEAT SET.	REF. ΔP	RECORD DATA MINS.
4 FT	.277	10	A	1	~~1.49~~ 1.55	0.8	80	8	.44	5

EMISSION TESTING FIELD DATA

TRAVERSE POINT NUMBER	SAMPLING TIME, min	CLOCK TIME (24 hr CLOCK)	GAS METER READING (V_m), ft^3	VELOCITY HEAD (Δp_s), in.H_2O	ORIFICE PRESSURE DIFFERENTIAL (ΔH), in.H_2O DESIRED	ORIFICE PRESSURE DIFFERENTIAL (ΔH), in.H_2O ACTUAL	STACK TEMPERATURE (T_s), °F	DRY GAS METER TEMPERATURE INLET ($T_{m_{in}}$), °F	DRY GAS METER TEMPERATURE OUTLET ($T_{m_{out}}$), °F	PUMP VACUUM, in.Hg	SAMPLE BOX TEMPERATURE °F	IMPINGER TEMPERATURE °F
	0	1742	533.649									
A-1	05.	47	38.760	.68	2.82	2.82	160	83	79	10.5	230	68
2	10.	52	43.590	.61	2.52	2.52	160	90	79	9.0	235	75
3	15.	57	48.465	.63	2.61	2.61	165	97	79	9.5	235	78
4	20.	1802	53.475	.66	2.72	2.72	160	102	79	10.0	235	78
5	25.	1807	58.520	.67	2.78	2.72	160	105	80	10.3	240	78
6	30.	1812	563.493	.63	2.61	2.61	160	107	80	9.5	245	77
B-1	35.	1818	68.720	.72	3.0	3.0	160	107	81	10.9	240	78
2	40.	23	73.520	.59	2.45	2.45	160	109	82	8.8	240	74
3	45.	28	78.480	.61	2.52	2.52	160	109	83	9.0	245	78
4	50.	33	83.295	.63	2.61	2.61	165	110	84	9.3	235	76
5	55.	38	88.270	.64	2.65	2.65	160	111	84	9.5	235	76
6	60.	1843	593.280	.65	2.69	2.69	160	111	84	9.5	230	74
C-1	65.	1849	98.620	.79	3.25	3.25	160	108	85	11.5	230	68
2	70.	54	603.746	.67	2.78	2.78	160	111	85	10.0	230	70
3	75.	59	08.815	.66	2.72	2.72	160	111	85	10.0	230	70
4	80.	1904	13.830	.65	2.69	2.69	160	111	85	9.8	230	70
5	85.	09	18.835	.64	2.65	2.65	160	111	85	9.5	230	72
6	90.	1914	623.779	.62	2.59	2.59	160	111	85	9.2	230	72
D-1	95.	1920	29.180	.77	3.20	3.20	160	110	85	11.7	230	70
2	100.	25	34.175	.62	2.59	2.59	160	111	85	9.5	235	68
3	105.	30	39.030	.61	2.52	2.52	160	110	85	9.0	235	70
4	110.	35	43.825	.59	2.45	2.45	160	110	85	8.9	235	72
5	115.	40	48.600	.59	2.45	2.45	160	109	84	8.9	235	72
6	120.	1945	653.350	.57	2.38	2.38	160	109	84	8.7	235	72

LEAKAGE @ 15 "Hg = .002 CFM

GAS METER COR. _.__

PEDCo - ENVIRONMENTAL
SUITE 8 • ATKINSON SQUARE
CINCINNATI, OHIO 45246

ANALYTICAL DATA

PLANT IMC Nanaho

DATE 2-16-73

SAMPLING LOCATION BAGHOUSE OUTLET

SAMPLE TYPE PARTICULATE

RUN NUMBER 3

SAMPLE BOX NUMBER

CLEAN-UP MAN J. Geiger

COMMENTS: 480.8
Imp. Tare = 444.6
36.2

FRONT HALF

LABORATORY RESULTS

ACETONE WASH OF NOZZLE, PROBE, CYCLONE (BYPASS), FLASK, FRONT HALF OF FILTER HOLDER — CONTAINER S-73-002-602 _____ mg

FILTER NUMBER 73031 ✓ _____ — CONTAINER 603 _____ mg

FRONT HALF SUBTOTAL _____ mg

BACK HALF

IMPINGER CONTENTS AND WATER WASH OF IMPINGERS, CONNECTORS, AND BACK HALF OF FILTER HOLDER — CONTAINER 604 _____ mg

ETHER-CHLOROFORM EXTRACTION 605 _____ mg

ACETONE WASH OF IMPINGERS, CONNECTORS, AND BACK HALF OF FILTER HOLDER — CONTAINER 606 _____ mg

BACK HALF SUBTOTAL _____ mg

TOTAL WEIGHT _____ mg

MOISTURE

IMPINGERS

FINAL VOLUME 236 ml

INITIAL VOLUME 200 ml

NET VOLUME 36 ml

SILICA GEL

FINAL WEIGHT	236.2 g	_____ g	_____ g
INITIAL WEIGHT	200.0 g	_____ g	_____ g
NET WEIGHT	36.2 g	_____ g	_____ g

36.2
36

TOTAL MOISTURE 172.2 g

PLANT	I.M.C. NORALYN, FLA.	DATE	02/16/73
SAMPLING LOCATION	INLET-ROCK GRINDER	RUN NUMBER	7
SAMPLE TYPE	PARTICULATE	PROBE LENGTH AND TYPE	4FT GLASS-HEATED
OPERATOR	N.K.	NOZZLE I.D.	.1800
AMBIENT TEMP.(DEG.F)	70	ASSUMED MOISTURE	10
BAR.PRESS.(IN.HG)	30.40	SAMPLE BOX NUMBER	3
STATIC PRESS(IN.H2O)	-1.35	METER BOX NUMBER	4
FILTER NUMBER(S)	73-031-029-032-033	METER HEAD DIFF.	1.67
STACK INSIDE DIM(IN)	11.750	C FACTOR	0.83
PITOT TUBE COEFF	.83	PROBE HEATER SETTING	80
		HEATER BOX SETTING	250
READ AND RECORD DATA EVERY 3.0 MINUTES		REFERENCE PRESS DIFF.	2.30

TRAVERSE POINT NO.	SAMPLE TIME (MIN.)	CLOCK TIME (24-HR CLOCK)	GAS METER READING (CU.FT.)	VELOCITY HEAD (IN.H2O)	ORIFICE PRESSURE DIFFERENTIAL (IN.H2O) DESIRED	ACTUAL	STACK TEMP (DEG.F)	DRY GAS METER TEMP (DEG.F) INLET	OUTLET	PUMP VACUUM (IN.HG)	SAMPLE BOX TEMP (DEG.F)	IMPINGER TEMP (DEG.F)
INIT	0	1126	839.807									
B-1	3.0	1130	841.800	1.500	1.20	1.20	205	62	62	5.5	220	55
B-2	6.0	1133	843.700	1.500	1.20	1.20	205	66	62	5.5	230	55
B-3	9.0	1136	845.680	1.650	1.35	1.35	205	70	63	7.0	220	57
B-4	12.0	1139	847.730	1.700	1.38	1.38	205	74	63	8.0	220	59
B-5	15.0	1142	849.840	1.750	1.40	1.40	205	77	64	9.0	220	60
B-6	18.0	1145	851.880	1.850	1.50	1.50	205	81	65	10.0	250	62
B-7	21.0	1148	854.000	1.850	1.50	1.50	205	84	66	11.5	290	64
B-8	24.0	1151	856.120	1.900	1.55	1.55	205	86	67	14.5	230	64
B-9	27.0	1156	858.310	2.100	1.70	1.70	205	87	68	20.0	240	65
B-10	30.0	1159	860.930	2.300	1.85	1.85	205	90	70	6.0	250	66
B-11	33.0	1202	863.300	2.300	1.85	1.85	205	91	70	7.0	280	65
B-12	36.0	1205	865.720	2.350	1.90	1.90	205	93	72	9.0	280	65
B-13	39.0	1208	867.970	2.200	1.75	1.75	205	95	72	10.5	275	65
B-14	42.0	1211	870.300	2.200	1.75	1.75	205	95	73	12.0	275	66
A-1	45.0	1234	872.350	1.650	1.35	1.35	200	75	70	4.0	240	57
A-2	48.0	1237	874.380	1.650	1.35	1.35	200	79	73	5.0	265	57
A-3	51.0	1240	876.490	1.700	1.38	1.38	200	82	73	7.0	235	57
A-4	54.0	1243	878.660	1.900	1.55	1.55	200	85	74	8.5	220	58
A-5	57.0	1246	880.850	1.850	1.50	1.50	200	87	74	11.0	270	58
A-6	60.0	1249	883.050	2.000	1.60	1.60	200	90	74	13.0	230	58
A-7	63.0	1252	885.270	1.850	1.50	1.50	200	92	75	18.0	250	59
A-8	66.0	1257	887.330	1.900	1.55	1.55	200	90	76	5.0	240	59
A-9	69.0	1300	889.470	1.750	1.40	1.40	200	92	76	5.5	230	60
A-10	72.0	1303	891.550	1.700	1.38	1.38	200	94	77	6.0	250	60
A-11	75.0	1306	893.650	1.750	1.40	1.40	200	94	77	7.0	250	58
A-12	78.0	1309	895.710	1.700	1.38	1.38	200	96	79	10.0	260	59
A-13	81.0	1312	897.840	1.900	1.45	1.45	200	97	79	11.5	250	59

PLANT I.M.C. NORALYN, FLA.
SAMPLING LOCATION INLET-ROCK GRINDER

DATE 02/16/73
RUN NUMBER 7

TRAVERSE POINT NO.	SAMPLE TIME (MIN.)	CLOCK TIME (24-HR CLOCK)	GAS METER READING (CU.FT.)	VELOCITY HEAD (IN.H2O)	ORIFICE PRESSURE DIFFERENTIAL (IN.H2O) DESIRED	ORIFICE PRESSURE DIFFERENTIAL (IN.H2O) ACTUAL	STACK TEMP (DEG.F)	DRY GAS METER TEMP (DEG.F) INLET	DRY GAS METER TEMP (DEG.F) OUTLET	PUMP VACUUM (IN.HG)	SAMPLE BOX TEMP (DEG.F)	IMPINGER TEMP (DEG.F)
A-14	84.0	1315	899.945	1.900	1.45	1.45	200	98	79	13.0	250	59
TOTALS	84.0		60.138									
AVERAGE					1.50	1.50	203	86	71	9.3	249	60

PLANT	I.M.C. NORALYN, FLA.	DATE	02/16/73
SAMPLING LOCATION	INLET-ROCK GRINDER	RUN NUMBER	7

DRY MOLECULAR WEIGHT DETERMINATION

GAS	VOL. PERCENT DRY BASIS
CO2	
O2	
CO	
N2	
TOTAL	

DRY MOLECULAR WEIGHT, LB/LB-MOLE: 29.00

MOISTURE CONTENT DETERMINATION

IMPINGER MOISTURE, ML	63.0
SILICA MOISTURE, ML	19.4
TOTAL MOISTURE, ML	82.4
WATER VAPOR COLLECTED, STD. CU. FT.	3.906
GAS METER VOL., CU.FT.	
GROSS TOTAL	60.138
LESS LEAKAGE CORR	.000
NET TOTAL	60.138
DRY GAS VOL. THROUGH METER, STD. CU. FT	60.401
MOISTURE CONTENT, VOL. FRACTION	.0607

STACK GAS VELOCITY AND VOLUME DETERMINATION

STACK AREA, SQ. FT.	.753
PITOT TUBE COEFFICIENT	.83
STACK ABS.PRESS., IN.HG	30.30
STACK GAS TEMPERATURE, DEG.F	203
STACK GAS MOL. WT., WET BASIS	28.33
SQRT(VEL HD X STACK TEMP ABS)	35.1
STACK GAS VELOCITY, ACT. FPS	84.9
STACK GAS VOLUME, STD CFM, WET BASIS	3104.8
DRY BASIS	2916.2

ISOKINETIC VARIATION

PERCENT OF ISOKINETIC SAMPLING: 105.0

EMISSION DATA

SAMPLE	PROBE, CYCLONE, FILTER	TOTAL
WEIGHT, MG	14513.0000	14556.0000
STD CONC, GR/SCF	3.70804	3.71903
ACT CONC, GR/ACF	2.81959	2.82794
EMISSION RATE, LB/HR	92.636	92.961
THROUGHPUT, TON/HR	36.0000	
EMISSION FACTOR, LB/TON	2.574	2.582

PLANT	I.M.C. NORALYN, FLA.	DATE	02/16/73
SAMPLING LOCATION	GRINDER BAGHOUSE-OUTLET	RUN NUMBER	7
SAMPLE TYPE	PARTICULATE	PROBE LENGTH AND TYPE	4FT GLASS-HEATED
OPERATOR	O'CONNOR-MEER	NOZZLE I.D.	.2770
AMBIENT TEMP.(DEG.F)	62	ASSUMED MOISTURE	10
BAR.PRESS.(IN.HG)	30.40	SAMPLE BOX NUMBER	A
STATIC PRESS(IN.H2O)	.30	METER BOX NUMBER	1
FILTER NUMBER(S)	73-009	METER HEAD DIFF.	1.55
STACK INSIDE DIM(IN)	12.000 X 14.000	C FACTOR	0.8
PITOT TUBE COEFF	.83	PROBE HEATER SETTING	80
		HEATER BOX SETTING	250
READ AND RECORD DATA EVERY 5.0 MINUTES		REFERENCE PRESS DIFF.	.44

TRAVERSE POINT NO.	SAMPLE TIME (MIN.)	CLOCK TIME (24-HR CLOCK)	GAS METER READING (CU.FT.)	VELOCITY HEAD (IN.H2O)	ORIFICE PRESSURE DIFFERENTIAL (IN.H2O) DESIRED	ORIFICE PRESSURE DIFFERENTIAL (IN.H2O) ACTUAL	STACK TEMP (DEG.F)	DRY GAS METER TEMP (DEG.F) INLET	DRY GAS METER TEMP (DEG.F) OUTLET	PUMP VACUUM (IN.HG)	SAMPLE BOX TEMP (DEG.F)	IMPINGER TEMP (DEG.F)
INIT	0	1125	299.257									
A-1	5.0	1130	303.975	.620	2.50	2.50	160	70	66	9.5	235	70
A-2	10.0	1135	308.280	.520	2.18	2.18	160	76	66	7.8	235	72
A-3	15.0	1140	312.735	.540	2.22	2.22	160	83	67	8.2	240	75
A-4	20.0	1145	317.860	.580	2.41	2.41	160	93	70	8.8	225	78
A-5	25.0	1150	322.120	.590	2.45	2.45	160	97	71	9.0	235	78
A-6	30.0	1155	326.728	.550	2.28	2.28	165	99	72	8.2	240	80
B-1	35.0	1203	331.610	.620	2.59	2.59	160	101	75	9.5	240	80
B-2	40.0	1208	336.130	.550	2.28	2.28	165	103	77	8.0	235	80
B-3	45.0	1213	340.810	.570	2.38	2.38	165	105	78	8.5	240	82
B-4	50.0	1218	345.625	.600	2.50	2.50	165	106	78	9.0	245	83
B-5	55.0	1223	350.610	.620	2.59	2.59	160	107	79	9.5	240	83
B-6	60.0	1228	355.330	.570	2.38	2.38	160	109	80	8.5	240	82
C-1	65.0	1233	360.625	.720	3.00	3.00	160	110	82	13.0	240	84
C-2	70.0	1238	365.675	.650	2.69	2.69	165	112	83	11.0	240	81
C-3	75.0	1243	370.750	.660	2.72	2.72	160	113	84	11.5	240	78
C-4	80.0	1248	375.960	.680	2.82	2.82	160	116	85	12.2	245	76
C-5	85.0	1253	381.075	.660	2.72	2.72	160	117	87	11.8	240	78
C-6	90.0	1258	386.135	.650	2.69	2.69	160	117	87	11.5	245	78
D-1	95.0	1303	391.305	.720	3.00	3.00	160	117	88	13.8	245	79
D-2	100.0	1308	396.540	.650	2.69	2.69	160	118	89	12.0	245	75
D-3	105.0	1313	401.475	.650	2.69	2.69	160	118	89	12.0	240	73
D-4	110.0	1318	406.565	.660	2.72	2.72	160	118	89	12.2	245	73
D-5	115.0	1323	411.660	.640	2.65	2.65	160	119	90	12.0	240	75
D-6	120.0	1328	416.612	.610	2.52	2.52	160	120	91	11.2	240	76
TOTALS	120.0		117.355									
AVERAGE					2.57	2.57	161	106	80	10.4	240	78

SAMPLING LOCATION GRINDER BAGHOUSE-OUTLET

RUN NUMBER 7

DRY MOLECULAR WEIGHT DETERMINATION

GAS	VOL. PERCENT DRY BASIS
CO2	
O2	
CO	
N2	
TOTAL	
DRY MOLECULAR WEIGHT, LB/LB-MOLE	29.00

MOISTURE CONTENT DETERMINATION

IMPINGER MOISTURE, ML	92.0
SILICA MOISTURE, ML	44.4
TOTAL MOISTURE, ML	136.4
WATER VAPOR COLLECTED, STD. CU. FT.	6.465
GAS METER VOL., CU.FT.	
GROSS TOTAL	117.355
LESS LEAKAGE CORR	.000
NET TOTAL	117.355
DRY GAS VOL. THROUGH METER, STD. CU. FT	114.965
MOISTURE CONTENT, VOL. FRACTION	.0532

STACK GAS VELOCITY AND VOLUME DETERMINATION

STACK AREA, SQ. FT.	1.167
PITOT TUBE COEFFICIENT	.83
STACK ABS.PRESS., IN.HG	30.42
STACK GAS TEMPERATURE, DEG.F	161
STACK GAS MOL. WT., WET BASIS	25.41
SQRT(VEL HD X STACK TEMP ABS)	19.6
STACK GAS VELOCITY, ACT. FPS	47.3
STACK GAS VOLUME, STD CFM,	
WET BASIS	2873.1
DRY BASIS	2720.1

ISOKINETIC VARIATION

PERCENT OF ISOKINETIC SAMPLING	98.2

EMISSION DATA

SAMPLE	PROBE,CYCLONE,FILTER	TOTAL
WEIGHT, MG	63.3000	111.0000
STD CONC, GR/SCF	.00849	.01490
ACT CONC, GR/ACF	.00698	.01224
EMISSION RATE, LB/HR	.198	.347
THROUGHPUT, TON/HR	36.0000	
EMISSION FACTOR, LB/TON	.005	.009

PLANT	I.M.C. NORALYN, FLA.	DATE	02/16/73
SAMPLING LOCATION	INLET-ROCK GRINDER	RUN NUMBER	8
SAMPLE TYPE	PARTICULATE		
OPERATOR	N.K.	PROBE LENGTH AND TYPE	4FT GLASS-HEATED
AMBIENT TEMP.(DEG.F)	75	NOZZLE I.D.	.1800
BAR.PRESS.(IN.HG)	30.40	ASSUMED MOISTURE	10
STATIC PRESS(IN.H2O)	-1.25	SAMPLE BOX NUMBER	3
FILTER NUMBER(S)	73010,-11,-13,	METER BOX NUMBER	4
STACK INSIDE DIM(IN)	11.750	METER HEAD DIFF.	1.67
PITOT TUBE COEFF	.83	C FACTOR	0.83
		PROBE HEATER SETTING	80
READ AND RECORD DATA EVERY 3.0 MINUTES		HEATER BOX SETTING	250
		REFERENCE PRESS DIFF.	2.30

TRAVERSE POINT NO.	SAMPLE TIME (MIN.)	CLOCK TIME (24-HR CLOCK)	GAS METER READING (CU.FT.)	VELOCITY HEAD (IN.H2O)	ORIFICE PRESSURE DIFFERENTIAL (IN.H2O) DESIRED	ORIFICE PRESSURE DIFFERENTIAL (IN.H2O) ACTUAL	STACK TEMP (DEG.F)	DRY GAS METER TEMP (DEG.F) INLET	DRY GAS METER TEMP (DEG.F) OUTLET	PUMP VACUUM (IN.HG)	SAMPLE BOX TEMP (DEG.F)	IMPINGER TEMP (DEG.F)
INIT	0	1404	900.276									
A-1	3.0	1406	902.200	1.650	1.35	1.35	200	74	73	7.0	260	62
A-2	6.0	1446	904.210	1.650	1.35	1.35	200	70	70	7.0	240	70
A-3	9.0	1449	906.240	1.550	1.25	1.25	200	75	71	7.0	250	56
A-4	12.0	1452	908.340	1.800	1.45	1.45	200	78	72	9.0	235	59
A-5	15.0	1455		1.900	1.55	1.55	200	81	72	10.5	235	60
A-6	18.0	1458	912.300	2.000	1.60	1.60	200	86	72	11.5	250	60
A-7	21.0	1501	915.030	2.000	1.60	1.60	200	88	73	13.5	235	62
A-8	24.0	1504	917.190	1.900	1.55	1.55	205	90	73	14.5	235	64
A-9	27.0	1507	919.340	1.850	1.50	1.50	205	93	74	16.0	250	64
A-10	30.0	1510	921.450	1.700	1.38	1.38	205	95	75	16.0	250	65
A-11	33.0	1513	923.500	1.750	1.40	1.40	205	96	76	17.5	250	65
A-12	36.0	1516	925.570	1.750	1.40	1.40	205	97	77	19.5	220	63
A-13	39.0	1521	927.760	1.950	1.55	1.55	205	92	76	6.0	220	65
A-14	42.0	1524	929.910	1.950	1.55	1.55	205	96	78	6.5	230	60
B-1	45.0	1554	931.840	1.550	1.25	1.25	208	76	74	6.5	240	58
B-2	48.0	1557	933.730	1.450	1.15	1.15	208	79	75	7.0	260	59
B-3	51.0	1600		1.550	1.25	1.25	208	82	76	8.0	260	61
B-4	54.0	1603	937.600	1.550	1.25	1.25	208	84	76	9.5	230	61
B-5	57.0	1606	939.610	1.700	1.38	1.38	208	87	76	12.0	230	61
B-6	60.0	1609	941.750	1.750	1.40	1.40	208	90	76	14.0	240	62
B-7	63.0	1612	943.680	2.000	1.60	1.60	208	91	77	19.0	240	62
B-8	66.0	1621	945.920	2.000	1.60	1.60	208	87	76	5.0	250	61
B-9	69.0	1624	948.200	2.150	1.75	1.75	208	92	77	7.0	240	60
B-10	72.0	1627	950.520	2.150	1.75	1.75	208	96	79	9.0	270	61
A-11	75.0	1630	952.830	2.150	1.75	1.75	208	96	79	10.0	270	61
A-12	78.0	1641	955.140	2.150	1.75	1.75	208	97	80	12.0	270	63
A-13	81.0	1644	957.220	1.950	1.55	1.55	208	86	77	14.5	260	66

LAN ... ORA... FLA.

SAMPLING LOCATION INLET-ROCK GRINDER

DATE 02/16/73

RUN NUMBER 8

TRAVERSE POINT NO.	SAMPLE TIME (MIN.)	CLOCK TIME (24-HR CLOCK)	GAS METER READING (CU.FT.)	VELOCITY HEAD (IN.H2O)	ORIFICE PRESSURE DIFFERENTIAL (IN.H2O) DESIRED	ORIFICE PRESSURE DIFFERENTIAL (IN.H2O) ACTUAL	STACK TEMP (DEG.F)	DRY GAS METER TEMP (DEG.F) INLET	DRY GAS METER TEMP (DEG.F) OUTLET	PUMP VACUUM (IN.HG)	SAMPLE BOX TEMP (DEG.F)	IMPINGER TEMP (DEG.F)
A-14	84.0	1647	959.371	2.100	1.65	1.65	208	90	80	17.5	260	66
TOTALS	84.0		59.095									
AVERAGE					1.48	1.48	205	87	75	11.2	246	62

PLANT I.M.C. NORALYN, FLA.
SAMPLING LOCATION INLET-ROCK GRINDER

DATE 02/16/73
RUN NUMBER B

DRY MOLECULAR WEIGHT DETERMINATION

GAS	VOL. PERCENT DRY BASIS
CO2	
O2	
CO	
N2	
TOTAL	
DRY MOLECULAR WEIGHT, LB/LB-MOLE	29.00

MOISTURE CONTENT DETERMINATION

IMPINGER MOISTURE, ML	58.0
SILICA MOISTURE, ML	20.2
TOTAL MOISTURE, ML	78.2
WATER VAPOR COLLECTED, STD. CU. FT.	3.707
GAS METER VOL., CU.FT.	
GROSS TOTAL	59.095
LESS LEAKAGE CORR	.000
NET TOTAL	59.095
DRY GAS VOL. THROUGH METER, STD. CU. FT	59.022
MOISTURE CONTENT, VOL. FRACTION	.0591

STACK GAS VELOCITY AND VOLUME DETERMINATION

STACK AREA, SQ. FT.	.753
PITOT TUBE COEFFICIENT	.83
STACK ABS.PRESS., IN.HG	30.30
STACK GAS TEMPERATURE, DEG.F	205
STACK GAS MOL. WT., WET BASIS	28.35
SQRT(VEL HD X STACK TEMP ABS)	35.0
STACK GAS VELOCITY, ACT. FPS	34.6
STACK GAS VOLUME, STD CFM,	
WET BASIS	3085.1
DRY BASIS	2902.8

ISOKINETIC VARIATION

PERCENT OF ISOKINETIC SAMPLING	103.1

EMISSION DATA

SAMPLE	PROBE, CYCLONE, FILTER	TOTAL
WEIGHT, MG	10303.0000	10332.0000
STD CONC, GR/SCF	2.69392	2.70150
ACT CONC, GR/ACF	2.04597	2.05163
EMISSION RATE, LB/HR	67.027	67.216
THROUGHPUT, TON/HR	36.0000	
EMISSION FACTOR, LB/TON	1.861	1.867

FIELD DATA

PLANT	I.M.C. NORALYN, FLA.	DATE	02/16/73
SAMPLING LOCATION	INLET-ROCK GRINDER	RUN NUMBER	8-A
SAMPLE TYPE	PARTICULATE	PROBE LENGTH AND TYPE	4FT GLASS-HEATED
OPERATOR	N.K.	NOZZLE I.D.	.1250
AMBIENT TEMP.(DEG.F)	75	ASSUMED MOISTURE	10
BAR.PRESS.(IN.HG)	30.40	SAMPLE BOX NUMBER	3
STATIC PRESS(IN.H2O)	-1.35	METER BOX NUMBER	4
FILTER NUMBER(S)	73010,-11,-13	METER HEAD DIFF.	1.67
STACK INSIDE DIM(IN)	11.750	C FACTOR	0.83
PITOT TUBE COEFF	.83	PROBE HEATER SETTING	80
		HEATER BOX SETTING	250
READ AND RECORD DATA EVERY 3.0 MINUTES		REFERENCE PRESS DIFF.	2.30

TRAVERSE POINT NO.	SAMPLE TIME (MIN.)	CLOCK TIME (24-HR CLOCK)	GAS METER READING (CU.FT.)	VELOCITY HEAD (IN.H2O)	ORIFICE PRESSURE DIFFERENTIAL (IN.H2O) DESIRED	ORIFICE PRESSURE DIFFERENTIAL (IN.H2O) ACTUAL	STACK TEMP (DEG.F)	DRY GAS METER TEMP (DEG.F) INLET	DRY GAS METER TEMP (DEG.F) OUTLET	PUMP VACUUM (IN.HG)	SAMPLE BOX TEMP (DEG.F)	IMPINGER TEMP (DEG.F)
INIT	0	1404	900.276									
A-1	3.0	1406	902.200	1.650	1.35	1.35	200	74	73	7.0	260	62
A-2	6.0	1446	904.210	1.650	1.35	1.35	200	70	70	7.0	240	70
A-3	9.0	1449	906.240	1.550	1.25	1.25	200	75	71	7.0	250	56
A-4	12.0	1452	908.340	1.800	1.45	1.45	200	78	72	9.0	235	59
A-5	15.0	1455		1.900	1.55	1.55	200	81	72	10.5	235	60
A-6	18.0	1458	912.800	2.000	1.60	1.60	200	86	72	11.5	250	60
A-7	21.0	1501	915.030	2.000	1.60	1.60	200	88	79	13.5	235	62
A-8	24.0	1504	917.190	1.900	1.55	1.55	205	90	73	14.5	235	64
A-9	27.0	1507	919.340	1.850	1.50	1.50	205	93	74	16.0	250	64
A-10	30.0	1510	921.450	1.700	1.38	1.38	205	95	75	16.0	250	65
A-11	33.0	1513	923.500	1.750	1.40	1.40	205	96	76	17.5	250	65
A-12	36.0	1516	925.570	1.750	1.40	1.40	205	97	77	19.5	220	63
A-13	39.0	1521	927.760	1.950	1.55	1.55	205	92	76	6.0	220	65
A-14	42.0	1524	929.910	1.950	1.55	1.55	205	96	78	6.5	230	60
B-1	45.0	1554	931.840	1.550	1.25	1.25	208	76	74	6.5	240	58
B-2	48.0	1557	933.730	1.450	1.15	1.15	208	79	75	7.0	260	59
B-3	51.0	1600		1.550	1.25	1.25	208	82	76	8.0	260	51
B-4	54.0	1603	937.600	1.550	1.25	1.25	208	84	76	9.5	230	6.
B-5	57.0	1606	939.610	1.700	1.38	1.38	208	87	76	12.0	230	61
B-6	60.0	1609	941.750	1.750	1.40	1.40	208	90	76	14.0	240	62
B-7	63.0	1612	943.650	2.000	1.60	1.60	208	91	77	19.0	240	62
B-8	66.0	1621	945.920	2.000	1.60	1.60	208	87	76	6.0	250	61
B-9	69.0	1624	948.200	2.150	1.75	1.75	208	92	77	7.0	240	60
B-10	72.0	1627	950.520	2.150	1.75	1.75	208	96	79	9.0	270	61
A-11	75.0	1630	952.830	2.150	1.75	1.75	208	96	79	10.0	270	61
A-12	78.0	1641	955.140	2.150	1.75	1.75	208	97	80	12.0	270	63
A-13	81.0	1644	957.220	1.950	1.55	1.55	208	86	77	14.5	260	66

PLA[illegible] I.M[illegible] NOR[illegible] FLA.
SAMPLING LOCATION INLET-ROCK GRINDER

DATE 02/16/73
RUN NUMBER 8-A

TRAVERSE POINT NO.	SAMPLE TIME (MIN.)	CLOCK TIME (24-HR CLOCK)	GAS METER READING (CU.FT.)	VELOCITY HEAD (IN.H2O)	ORIFICE PRESSURE DIFFERENTIAL (IN.H2O) DESIRED	ORIFICE PRESSURE DIFFERENTIAL (IN.H2O) ACTUAL	STACK TEMP (DEG.F)	DRY GAS METER TEMP (DEG.F) INLET	DRY GAS METER TEMP (DEG.F) OUTLET	PUMP VACUUM (IN.HG)	SAMPLE BOX TEMP (DEG.F)	IMPINGER TEMP (DEG.F)
A-14	84.0	1647	959.371	2.100	1.65	1.65	208	90	80	17.5	260	66
TOTALS	84.0		59.095									
AVERAGE					1.48	1.48	205	87	75	11.2	246	62

PLANT I.M.C. MORALTA, FLA. DATE 02/16/75
SAMPLING LOCATION INLET-ROCK GRINDER RUN NUMBER 8-A

DRY MOLECULAR WEIGHT DETERMINATION		MOISTURE CONTENT DETERMINATION		STACK GAS VELOCITY AND VOLUME DETERMINATION	
GAS	VOL. PERCENT DRY BASIS	IMPINGER MOISTURE,ML	58.0	STACK AREA,SQ. FT.	.753
---	---	SILICA MOISTURE,ML	20.2	PITOT TUBE COEFFICIENT	.83
			---	STACK ABS.PRESS.,IN.HG	30.30
CO2		TOTAL MOISTURE,ML	78.2	STACK GAS TEMPERATURE,DEG.F	205
O2				STACK GAS MOL. WT.,WET BASIS	28.35
CO		WATER VAPOR COLLECTED, STD. CU. FT.	3.707		
N2					
	---			SQRT(VEL HD X STACK TEMP ABS)	35.0
TOTAL		GAS METER VOL.,CU.FT.			
		GROSS TOTAL	59.095	STACK GAS VELOCITY, ACT. FPS	84.6
		LESS LEAKAGE CORR	.000	STACK GAS VOLUME,STD CFM,	
DRY MOLECULAR WEIGHT,LB/LB-MOLE	29.00		---	WET BASIS	3085.1
		NET TOTAL	59.095	DRY BASIS	2902.8
		DRY GAS VOL. THROUGH METER,STD. CU. FT	59.022	ISOKINETIC VARIATION	
				PERCENT OF ISOKINETIC SAMPLING	213.8
		MOISTURE CONTENT, VOL. FRACTION	.0591		

PLANT	I.M.C. NORALYN, FLA.	DATE	02/16/73
SAMPLING LOCATION	GRINDER BAGHOUSE-OUTLET	RUN NUMBER	8
SAMPLE TYPE	PARTICULATE	PROBE LENGTH AND TYPE	4FT GLASS-HEATED
OPERATOR	O'CONNOR-MEER	NOZZLE I.D.	.2770
AMBIENT TEMP.(DEG.F)	70	ASSUMED MOISTURE	10
BAR.PRESS.(IN.HG)	30.40	SAMPLE BOX NUMBER	1
STATIC PRESS(IN.H2O)	.30	METER BOX NUMBER	1
FILTER NUMBER(S)	73-012,73030	METER HEAD DIFF.	1.55
STACK INSIDE DIM(IN)	12.000 X 14.000	C FACTOR	0.8
PITOT TUBE COEFF	.83	PROBE HEATER SETTING	80
		HEATER BOX SETTING	250
READ AND RECORD DATA EVERY 5.0 MINUTES		REFERENCE PRESS DIFF.	.44

TRAVERSE POINT NO.	SAMPLE TIME (MIN.)	CLOCK TIME (24-HR CLOCK)	GAS METER READING (CU.FT.)	VELOCITY HEAD (IN.H2O)	ORIFICE PRESSURE DIFFERENTIAL (IN.H2O) DESIRED	ORIFICE PRESSURE DIFFERENTIAL (IN.H2O) ACTUAL	STACK TEMP (DEG.F)	DRY GAS METER TEMP (DEG.F) INLET	DRY GAS METER TEMP (DEG.F) OUTLET	PUMP VACUUM (IN.HG)	SAMPLE BOX TEMP (DEG.F)	IMPINGER TEMP (DEG.F)
INIT	0	1444	417.544									
A-1	5.0	1449	421.635	.500	2.05	2.05	160	86	80	6.5	265	67
A-2	10.0	1454	425.920	.490	2.03	2.03	160	91	80	6.5	260	72
A-3	15.0	1459	430.415	.520	2.15	2.15	165	98	81	7.0	260	82
A-4	20.0	1504	435.130	.570	2.38	2.38	160	104	82	8.0	270	80
A-5	25.0	1509	440.170	.640	2.65	2.65	160	109	83	9.0	265	81
A-6	30.0	1514	445.084	.600	2.50	2.50	165	111	85	8.5	265	81
B-1	35.0	1522	450.005	.640	2.65	2.65	160	109	86	9.0	245	75
B-2	40.0	1527	454.860	.590	2.45	2.45	160	111	87	8.0	260	75
B-3	45.0	1532	459.685	.600	2.50	2.50	160	112	87	7.5	280	70
B-4	50.0	1537	464.690	.640	2.65	2.65	160	114	88	8.8	275	76
B-5	55.0	1542	469.685	.630	2.61	2.61	160	114	89	8.8	270	77
B-6	60.0	1547	474.560	.590	2.45	2.45	160	116	90	8.5	260	77
C-1	65.0	1553	479.510	.640	2.65	2.65	160	114	90	9.0	220	76
C-2	70.0	1558	484.390	.600	2.50	2.50	160	115	90	8.5	250	74
C-3	75.0	1603	489.235	.600	2.50	2.50	165	116	91	8.5	280	72
C-4	80.0	1608	494.180	.630	2.61	2.61	160	117	91	8.9	260	72
C-5	85.0	1613	499.075	.610	2.52	2.52	160	117	92	8.5	275	76
C-6	90.0	1618	503.940	.590	2.45	2.45	165	117	92	8.5	300	81
D-1	95.0	1623	509.280	.750	3.10	3.10	160	112	91	11.0	275	71
D-2	100.0	1628	514.270	.620	2.59	2.59	160	115	91	9.0	275	70
D-3	105.0	1633	519.185	.610	2.52	2.52	165	116	91	8.9	275	68
D-4	110.0	1644	523.985	.570	2.38	2.38	160	116	91	8.5	275	67
D-5	115.0	1649	528.760	.570	2.38	2.38	160	107	89	8.5	275	67
D-6	120.0	1654	533.543	.550	2.28	2.28	160	110	89	8.5	275	68
TOTALS	120.0		115.999									
AVERAGE					2.48	2.48	161	110	89	8.4	267	74

PLANT I.M.C. NORALYN, FLA.
SAMPLING LOCATION GRINDER BAGHOUSE-OUTLET

DATE 02/16/75
RUN NUMBER 9

DRY MOLECULAR WEIGHT DETERMINATION

GAS	VOL. PERCENT DRY BASIS
CO2	
O2	
CO	
N2	
TOTAL	

DRY MOLECULAR WEIGHT, LB/LB-MOLE 29.00

MOISTURE CONTENT DETERMINATION

IMPINGER MOISTURE, ML	99.0
SILICA MOISTURE, ML	53.8
TOTAL MOISTURE, ML	152.8
WATER VAPOR COLLECTED, STD. CU. FT.	7.243
GAS METER VOL., CU.FT.	
GROSS TOTAL	115.999
LESS LEAKAGE CORR	.000
NET TOTAL	115.999
DRY GAS VOL. THROUGH METER, STD. CU. FT	112.393
MOISTURE CONTENT, VOL. FRACTION	.0605

STACK GAS VELOCITY AND VOLUME DETERMINATION

STACK AREA, SQ. FT.	1.167
PITOT TUBE COEFFICIENT	.83
STACK ABS.PRESS., IN.HG	30.42
STACK GAS TEMPERATURE, DEG.F	161
STACK GAS MOL. WT., WET BASIS	28.33
SQRT(VEL HD X STACK TEMP ABS)	19.3
STACK GAS VELOCITY, ACT. FPS	46.5
STACK GAS VOLUME, STD CFM,	
WET BASIS	2825.3
DRY BASIS	2654.3

ISOKINETIC VARIATION

PERCENT OF ISOKINETIC SAMPLING	98.3

EMISSION DATA

SAMPLE	PROBE,CYCLONE,FILTER	TOTAL
WEIGHT, MG	47.8000	130.0000
STD CONC, GR/SCF	.00656	.01784
ACT CONC, GR/ACF	.00535	.01455
EMISSION RATE, LB/HR	.149	.406
THROUGHPUT, TON/HR	36.0000	
EMISSION FACTOR, LB/TON	.004	.011

PLANT	I.M.C. NORALYN, FLA.	DATE	02/16/73
SAMPLING LOCATION	INLET-ROCK GRINDER	RUN NUMBER	9
SAMPLE TYPE	PARTICULATE	PROBE LENGTH AND TYPE	4FT GLASS HEATED
OPERATOR	N.K.	NOZZLE I.D.	.1800
AMBIENT TEMP.(DEG.F)	75	ASSUMED MOISTURE	10
BAR.PRESS.(IN.HG)	30.34	SAMPLE BOX NUMBER	3
STATIC PRESS(IN.H2O)	-1.35	METER BOX NUMBER	4
FILTER NUMBER(S)	73035,-14,-15	METER HEAD DIFF.	1.67
STACK INSIDE DIM(IN)	11.750	C FACTOR	0.93
PITOT TUBE COEFF	.83	PROBE HEATER SETTING	90
		HEATER BOX SETTING	250
READ AND RECORD DATA EVERY 3.0 MINUTES		REFERENCE PRESS DIFF.	2.30

TRAVERSE POINT NO.	SAMPLE TIME (MIN.)	CLOCK TIME (24-HR CLOCK)	GAS METER READING (CU.FT.)	VELOCITY HEAD (IN.H2O)	ORIFICE PRESSURE DIFFERENTIAL (IN.H2O) DESIRED	ACTUAL	STACK TEMP (DEG.F)	DRY GAS METER TEMP (DEG.F) INLET	OUTLET	PUMP VACUUM (IN.HG)	SAMPLE BOX TEMP (DEG.F)	IMPINGER TEMP (DEG.F)
INIT	0	1746	959.559									
B-1	3.0	1749	961.620	1.850	1.50	1.50	200	70	70	5.0	240	48
B-2	6.0	1752	963.770	1.850	1.50	1.50	200	72	70	6.0	240	50
B-3	9.0	1755	966.550	1.900	1.55	1.55	200	75	70	6.5	250	53
B-4	12.0	1758	968.160	2.000	1.60	1.60	200	79	70	7.0	250	54
B-5	15.0	1801	970.340	1.950	1.55	1.55	200	81	70	7.0	235	54
B-6	18.0	1804	972.550	1.900	1.55	1.55	200	84	70	8.0	290	55
B-7	21.0	1807	974.660	1.900	1.55	1.55	200	86	71	9.0	240	54
B-8	24.0	1810	976.800	1.950	1.55	1.55	200	88	72	11.0	290	55
B-9	27.0	1813	979.050	2.100	1.70	1.70	200	90	73	13.0	250	57
B-10	30.0	1816		2.350	1.90	1.90	200	92	73	16.0	240	58
B-11	33.0	1819	983.870	2.400	1.95	1.95	200	94	74	18.5	240	60
B-12	36.0	1826	986.240	2.400	1.95	1.95	200	88	73	5.5	250	62
B-13	39.0	1829	988.690	2.400	1.95	1.95	200	92	74	7.0	245	56
B-14	42.0	1832	991.050	2.300	1.95	1.85	200	93	74	8.0	230	56
A-1	45.0	1857	993.120	1.800	1.45	1.45	200	74	70	6.0	230	52
A-2	48.0	1900	995.170	1.800	1.45	1.45	200	76	72	6.5	225	52
A-3	51.0	1903	997.380	2.000	1.60	1.60	200	78	72	8.5	240	51
A-4	54.0	1906	999.660	2.100	1.70	1.70	200	81	72	10.5	245	50
A-5	57.0	1909	1.050	2.100	1.70	1.70	200	84	72	12.5	220	53
A-6	60.0	1912	4.140	2.000	1.60	1.60	200	87	72	13.5	225	54
A-7	63.0	1915	6.370	2.000	1.60	1.60	200	78	72	15.5	220	55
A-8	66.0	1918	8.580	2.000	1.60	1.60	200	90	73	16.5	280	56
A-9	69.0	1924	10.800	2.000	1.60	1.60	200	86	72	5.0	230	57
A-10	72.0	1927	12.970	2.050	1.65	1.65	200	88	73	6.5	230	56
A-11	75.0	1930	15.240	2.100	1.70	1.70	200	89	73	7.5	240	55
A-12	78.0	1933	17.580	2.100	1.70	1.70	200	90	74	9.0	245	58
A-13	81.0	1936	19.850	2.100	1.70	1.70	200	93	74	10.5	250	58

PLANT I.M.C. NORALYN, FLA. DATE 02/16/73
SAMPLING LOCATION INLET-ROCK GRINDER RUN NUMBER 9

TRAVERSE POINT NO.	SAMPLE TIME (MIN.)	CLOCK TIME (24-HR CLOCK)	GAS METER READING (CU.FT.)	VELOCITY HEAD (IN.H2O)	ORIFICE PRESSURE DIFFERENTIAL (IN.H2O) DESIRED	ORIFICE PRESSURE DIFFERENTIAL (IN.H2O) ACTUAL	STACK TEMP (DEG.F)	DRY GAS METER TEMP (DEG.F) INLET	DRY GAS METER TEMP (DEG.F) OUTLET	PUMP VACUUM (IN.HG)	SAMPLE BOX TEMP (DEG.F)	IMPINGER TEMP (DEG.F)
A-14	84.0	1939	22.114	2.100	1.70	1.70	200	95	74	13.0	250	58
TOTALS	84.0		62.555									
AVERAGE					1.66	1.66	200	85	72	9.6	244	55

PLANT	I.M.C. NORALYN, FLA.	DATE	02/16/73
SAMPLING LOCATION	INLET-ROCK GRINDER	RUN NUMBER	9

DRY MOLECULAR WEIGHT DETERMINATION

GAS	VOL. PERCENT DRY BASIS
CO2	
O2	
CO	
N2	
TOTAL	

DRY MOLECULAR WEIGHT,LB/LB-MOLE: 29.00

MOISTURE CONTENT DETERMINATION

IMPINGER MOISTURE,ML	63.0
SILICA MOISTURE,ML	19.9
TOTAL MOISTURE,ML	82.9
WATER VAPOR COLLECTED, STD. CU. FT.	3.929
GAS METER VOL.,CU.FT.	
GROSS TOTAL	62.555
LESS LEAKAGE CORR	.000
NET TOTAL	62.555
DRY GAS VOL. THROUGH METER,STD. CU. FT	62.728
MOISTURE CONTENT, VOL. FRACTION	.0589

STACK GAS VELOCITY AND VOLUME DETERMINATION

STACK AREA,SQ. FT.	.753
PITOT TUBE COEFFICIENT	.83
STACK ABS.PRESS.,IN.HG	30.24
STACK GAS TEMPERATURE,DEG.F	200
STACK GAS MOL. WT.,WET BASIS	28.35
SQRT(VEL HD X STACK TEMP ABS)	36.8
STACK GAS VELOCITY, ACT. FPS	89.1
STACK GAS VOLUME,STD CFM, WET BASIS	3267.5
DRY BASIS	3074.9

ISOKINETIC VARIATION

PERCENT OF ISOKINETIC SAMPLING: 103.4

EMISSION DATA

SAMPLE	PROBE,CYCLONE,FILTER	TOTAL
WEIGHT,MG	11316.0000	11342.0000
STD CONC,GR/SCF	2.78395	2.79035
ACT CONC,GR/ACF	2.12636	2.13125
EMISSION RATE,LB/HR	73.373	73.542
THROUGHPUT, TON/HR	33.0000	
EMISSION FACTOR,LB/TON	2.223	2.228

FIELD DATA

PLANT	I.M.C. NORALYN, FLA.	DATE	02/16/73
SAMPLING LOCATION	GRINDER BAGHOUSE-OUTLET	RUN NUMBER	9
SAMPLE TYPE	PARTICULATE	PROBE LENGTH AND TYPE	4FT
OPERATOR	O'CONNOR-MEER	NOZZLE I.D.	.2770
AMBIENT TEMP.(DEG.F)	65	ASSUMED MOISTURE	10
BAR.PRESS.(IN.HG)	30.40	SAMPLE BOX NUMBER	A
STATIC PRESS(IN.H2O)	.30	METER BOX NUMBER	1
FILTER NUMBER(S)	73034	METER HEAD DIFF.	1.55
STACK INSIDE DIM(IN)	12.000 X 14.000	C FACTOR	0.8
PITOT TUBE COEFF	.33	PROBE HEATER SETTING	80
		HEATER BOX SETTING	8
READ AND RECORD DATA EVERY 5.0 MINUTES		REFERENCE PRESS DIFF.	.44

TRAVERSE POINT NO.	SAMPLE TIME (MIN.)	CLOCK TIME (24-HR CLOCK)	GAS METER READING (CU.FT.)	VELOCITY HEAD (IN.H2O)	ORIFICE PRESSURE DIFFERENTIAL (IN.H2O) DESIRED	ORIFICE PRESSURE DIFFERENTIAL (IN.H2O) ACTUAL	STACK TEMP (DEG.F)	DRY GAS METER TEMP (DEG.F) INLET	DRY GAS METER TEMP (DEG.F) OUTLET	PUMP VACUUM (IN.HG)	SAMPLE BOX TEMP (DEG.F)	IMPINGER TEMP (DEG.F)
INIT	0	1742	533.649									
A-1	5.0	1747	538.760	.680	2.82	2.82	160	83	79	10.5	250	68
A-2	10.0	1752	543.590	.610	2.52	2.52	160	90	79	9.0	235	78
A-3	15.0	1757	548.465	.630	2.61	2.61	165	97	79	9.5	235	78
A-4	20.0	1802	553.475	.660	2.72	2.72	160	102	79	10.0	235	78
A-5	25.0	1807	558.520	.670	2.78	2.72	160	105	80	10.3	240	78
A-6	30.0	1812	563.493	.630	2.61	2.61	160	107	80	9.5	245	77
B-1	35.0	1818	568.720	.720	3.00	3.00	160	107	81	10.9	240	78
B-2	40.0	1823	573.520	.590	2.45	2.45	160	109	82	8.8	240	74
B-3	45.0	1828	578.430	.610	2.52	2.52	160	109	83	9.0	245	78
B-4	50.0	1833	583.295	.630	2.61	2.61	165	110	84	9.3	235	76
B-5	55.0	1838	588.270	.640	2.65	2.65	160	111	84	9.5	235	76
B-6	60.0	1843	593.280	.650	2.69	2.69	160	111	84	9.5	230	74
C-1	65.0	1849	598.620	.790	3.25	3.25	160	108	85	11.5	230	68
C-2	70.0	1854	603.740	.670	2.78	2.78	160	111	85	10.0	230	70
C-3	75.0	1859	608.815	.660	2.72	2.72	160	111	85	10.0	230	70
C-4	80.0	1904	613.830	.650	2.69	2.69	160	111	85	9.8	230	70
C-5	85.0	1909	618.835	.640	2.65	2.65	160	111	85	9.5	230	72
C-6	90.0	1914	623.779	.620	2.59	2.59	160	111	85	9.2	230	72
D-1	95.0	1920	629.180	.770	3.20	3.20	160	110	85	11.7	230	70
D-2	100.0	1925	634.175	.620	2.59	2.59	160	111	85	9.5	235	68
D-3	105.0	1930	639.030	.610	2.52	2.52	160	110	85	9.0	235	70
D-4	110.0	1935	643.825	.590	2.45	2.45	160	110	85	8.9	235	72
D-5	115.0	1940	648.600	.590	2.45	2.45	160	109	84	8.9	235	72
D-6	120.0	1945	653.350	.570	2.38	2.38	160	109	84	8.7	235	72
TOTALS	120.0		119.701									
AVERAGE					2.68	2.67	160	107	83	9.7	235	73

PLANT	I.M.C. NORALYN, FLA.	DATE	02/16/73
SAMPLING LOCATION	GRINDER BAGHOUSE-OUTLET	RUN NUMBER	9

DRY MOLECULAR WEIGHT DETERMINATION

GAS	VOL. PERCENT DRY BASIS
CO2	
O2	
CO	
N2	
TOTAL	
DRY MOLECULAR WEIGHT,LB/LB-MOLE	29.00

MOISTURE CONTENT DETERMINATION

IMPINGER MOISTURE,ML	136.0
SILICA MOISTURE,ML	36.2
TOTAL MOISTURE,ML	172.2
WATER VAPOR COLLECTED, STD. CU. FT.	8.162
GAS METER VOL.,CU.FT.	
GROSS TOTAL	119.701
LESS LEAKAGE CORR	.000
NET TOTAL	119.701
DRY GAS VOL. THROUGH METER,STD. CU. FT	116.870
MOISTURE CONTENT, VOL. FRACTION	.0653

STACK GAS VELOCITY AND VOLUME DETERMINATION

STACK AREA,SQ. FT.	1.167
PITOT TUBE COEFFICIENT	.83
STACK ABS.PRESS.,IN.HG	30.42
STACK GAS TEMPERATURE,DEG.F	160
STACK GAS MOL. WT.,WET BASIS	28.28
SQRT(VEL HD X STACK TEMP ABS)	20.0
STACK GAS VELOCITY, ACT. FPS	48.4
STACK GAS VOLUME,STD CFM,	
WET BASIS	2942.8
DRY BASIS	2750.7

ISOKINETIC VARIATION

PERCENT OF ISOKINETIC SAMPLING	98.7

EMISSION DATA

SAMPLE	PROBE,CYCLONE,FILTER	TOTAL
WEIGHT,MG	33.0000	60.7000
STD CONC,GR/SCF	.00435	.00801
ACT CONC,GR/ACF	.00354	.00651
EMISSION RATE,LB/HR	.102	.188
THROUGHPUT, TON/HR	33.0000	
EMISSION FACTOR,LB/TON	.003	.005

APPENDIX D

SAMPLING PROCEDURES

The general test procedure is described in Section VII. Individual test comments are presented here.

Inlet tests lasted for 84 minutes, whereas outlet tests ran for a 120 minute duration. The gross sampling time was approximately equal for inlet and outlet tests, because of the time needed to transfer the inlet sample box between the horizontal and vertical ports.

A discussion of pertinent items from each test follows.

Run 7. Outlet crew had trouble with sampling train. An adequate vacuum could not be pulled during the leak check. The leak could not be found; when the meter box was replaced, the leak check was satisfactory.

Run 8. The inlet crew inserted the wrong diameter nozzle on the probe. This was noticed midway during the test when changing sampling ports. The process went down as a piece of lumber entered the grinder, which took about ten minutes to remove.

Run 9. The inlet crew broke an impinger connector upon transferring sample box to the vertical port. The connector was replaced, and the remains of the broken impinger were placed in a container to later be acetone washed in the clean up area.

APPENDIX E

LABORATORY REPORT

SOURCE SAMPLE REQUEST & REPORT
(MUST BE FILLED OUT FOR EACH TEST RUN)

SAMPLING DATE: 73 (YR) 2 (MO) 16 (DAY)

FIRST IDENT. NO. USED: 5-73-002-573

LAST IDENT. NO. USED: 5-73-002-577

TEST NO: 73-RCC-2

RUN NO: 1

RECD. / HCRD.: 2-26-73

INDUSTRY: Rock Drying & Grinding (USE TABLE A)

COMPANY: IMC

ADDRESS: Noralyn, Fla.

SAMPLING METHOD: EPA 5

UNIT PROCESS OPERATION: Raymond Grinding Mill

AIR POLLUTION CONTROL: Baghouse

FUEL USED: N/A

☒ INLET ☐ OUTLET

GAS VOLUME SAMPLED (METER VOL IN FT³): 60.133

COPIES TO

P. O.

LAB.

FILED

IDENT NO	DESCRIPTION OF SAMPLE OR SAMPLE FRACTION	SAMPLE WT (SOLID) MG	SAMPLE VOL (LIQUID) ML	ANALYSIS REQUESTED · GENERAL COMMENTS (APPROX CONCENTRATIONS · POSSIBLE INTERFERENCES ETC) (INDICATE SPECIFIC ANALYSIS ON BACKSIDE)
5-73-002-573	FRONT ACETONE WASH	9,645.3	1,005	Part. Mass
-574	FILTER # 73031, 73029, 73032, 73033	4,868.0	—	" "
-575	IMP CONTENT	26.9	500	" "
-576	IMP ORGANIC EXTRACT	1.5	150	" "
-577	BACK ACETONE WASH	14.6	280	" "
H₂O volumes				
Initial — 210				
Final — 213				
[illegible] — 425				

COMMENTS: [illegible] blanks! [illegible] samples! 575 - contains small amount of silica gel & [illegible] 577 " " " " "

SAMPLING CONTRACTOR: PEDCO (IF APPLICABLE)

PROJECT OFFICER: Clyde E. Riley

REQUEST REVIEWED BY: [signature] 2/23/73

DATE OF REQUEST: 2-23-73

DATE ANALYSIS REQUESTED

DATE OF REQUEST (TO BE FILLED IN BY SSFAB)

EPA-DUR 245

REPORT OF ANALYSIS
TRACE ELEMENTS
ppm - for solid samples
ug/ml - for liquid samples

Mark (x) for specific analysis
Mark (x) in block to left of Ident. No. when requesting all analysis on that line

Ident No.	Hg	Be	Cd	As	V	Mn	Ni	Sb	Cr	Zn	Cu	Pb	Se	B	F	Li	Ag	Sn	Fe	Sr	Na	K	Ca	Si	Mg	Ba						

Analysis Method: 1-NAA, 2-SSMS, 3-OES, 4-AA, 5-ASV, 6-XRF, and 7-other

Comments:

Other Analysis - Use Table B to fill analysis requested above each column

Mark (x) for specific analysis requested

Ident No.	Mass	Org. Mass								
5-73-008-573	X 9,645.3 mg									
574	X 4,863.0 mg									
575	X 26.8 mg									
576	X	X 1.5 mg.								
577	X 14.6 mg									
Analyst	J.T.K.	J.T.K.								
Method	#5	#5								

Comments: #575 was extracted in the usual manner than expected at 70°C to prevent the boiling liquid.

SOURCE SAMPLE REQUEST & REPORT
(MUST BE FILLED OUT FOR EACH TEST RUN)

SAMPLING DATE 73 | 2 | 16 (YR | MO | DAY)

FIRST IDENT. NO. USED S-73-002-578

LAST IDENT. NO. USED S-73-002-582

TEST NO 73-RCC-2

RUN NO 1

INDUSTRY Rock Drying + Grinding (USE TABLE A)

UNIT PROCESS OPERATION Raymond Grinding Mill } 2-26-73

COMPANY TMC

AIR POLLUTION CONTROL Baghouse

ADDRESS Noralyn, Fla.

FUEL USED N/A

☐ INLET ☒ OUTLET

SAMPLING METHOD EPA 5

GAS VOLUME SAMPLED (METER VOL IN FT³) 117.3.5.5

IDENT NO	DESCRIPTION OF SAMPLE OR SAMPLE FRACTION	SAMPLE WT (SOLID) MG	SAMPLE VOL (LIQUID) ML	ANALYSIS REQUESTED - GENERAL COMMENTS (APPROX CONCENTRATIONS - POSSIBLE INTERFERENCES ETC) (INDICATE SPECIFIC ANALYSIS ON BACKSIDE)
S-73-002-578	FRONT ACETONE WASH	52.6	270	Part. Metals + Trace Metals
579	FILTER # 73009	10.7	—	" " " " "
*580	IMP CONTENTS & WASH	15.2	760	" " " " "
581	IMP ORGANIC EXTRACT	2.3	210	" " " " "
582	DICH ACETONE WASH	30.6	430	" " " " "
Hel [illegible]				
Initial - 200				
Final - 292				
[illegible] - 710				

COMMENTS: Clean extract blanks!

SAMPLING CONTRACTOR PEDCO (IF APPLICABLE)

PROJECT OFFICER Clyde E Riley

REQUEST REVIEWED BY [illegible] 2/23/73

DATE OF REQUEST 2-23-73

DATE ANALYSIS REQUESTED

DATE OF REQUEST

EPA/DURHAM *580 - Contains small amounts of silica gel.

(TO BE FILLED IN BY SSFAB)

[illegible]RT [illegible]ALYS[illegible]
TRA[illegible] [illegible]LEMEN[illegible]
ppm - for solid samples
ug/ml - for liquid samples

[illegible]ork [illegible] spec [illegible]lysis
Mark (x) in block to left of Ident. No. when requesting all analysis on that line

Ident No.	Hg	Be	Cd	As	V	Mn	Ni	Sb	Cr	Zn	Cu	Pb	Se	B	F	Li	Ag	Sn	Fe	Sr	Na	K	Ca	Si	Mg	Ba				
X 578																														
X 579																														
X 580																														
X 581																														
X 582																														

Analysis Method: 1-NAA, 2-SSMS, 3-OES, 4-AA, 5-ASV, 6-XRF, and 7-other

Comments:

Other Analysis - Use Table B to fill analysis requested (above each column)

Mark (x) for specific analysis requested

Ident No.	Mass	Org. Micr.								
5-23-002-575	X 52.6 mg									
579	X 10.7 mg									
580	X 15.[illegible] mg									
581	[illegible]	X 2.3 mg								
582	X 30.6 mg									
Analyst	J.T.K.	J.T.K.								
Method	#5	#5								

Comments: 580 - see comments for #5-23-002-575. (Contains small amounts of silica gel).

SOURCE SAMPLE REQUEST & REPORT
(MUST BE FILLED OUT FOR EACH TEST RUN)

SAMPLING DATE 73 | 2 | 16 (YR | MO | DAY)

FIRST IDENT. NO. USED 5-73-002-585

LAST IDENT. NO. USED 5-73-002-589

TEST NO 73-RCC-2

RUN NO 2

RECD. / RD. 2-26-73

INDUSTRY Rock Engine & Grinding (USE TABLE A)

UNIT PROCESS OPERATION Raymond Grinding Mill

COMPANY IMC

AIR POLLUTION CONTROL Baghouse

ADDRESS Noralyn, Fla.

FUEL USED N/A

COPIES TO

P. O.

LAB.

FILE

SAMPLING METHOD EPA 5

☒ INLET ☐ OUTLET

GAS VOLUME SAMPLED (METER VOL IN FT³) 59.095

IDENT NO	DESCRIPTION OF SAMPLE OR SAMPLE FRACTION	SAMPLE WT (SOLID) MG	SAMPLE VOL (LIQUID) ML	ANALYSIS REQUESTED - GENERAL COMMENTS (APPROX CONCENTRATIONS - POSSIBLE INTERFERENCES ETC) (INDICATE SPECIFIC ANALYSIS ON BACKSIDE)
5-73-002-585	FRONT ACETONE WASH	6,836.9	835	Part. Mass
-586	FILTER # 73010, 73011, 73013	3,416.0	—	" "
-587	IMP CONTENTS & WASH	8.5	645	" "
-588	IMP ORGANIC EXTRACT	6.5	180	" "
-589	BACK ACETONE WASH	14.4	265	" "
H2O volumes				
Initial — 200				
Final — 258				
a/acet — 595				

COMMENTS: Clean extract blanks! 587- contains traces of silica gel
Filter stuck in ziplock

SAMPLING CONTRACTOR PEDCO (IF APPLICABLE)

PROJECT OFFICER Clyde E. Riley

REQUEST REVIEWED BY [illegible] 2/23/73

DATE OF REQUEST 2-23-73

DATE ANALYSIS REQUESTED

DATE OF REQUEST (TO BE FILLED IN BY SSFAB)

EPA1DUR1245

REPORT OF ANALYSIS
TRACE ELEMENTS
ppm - for solid samples
ug/ml - for liquid samples

Mark (x) for specific analysis
Mark (x) in block to left of Ident. No. when requesting all analysis on that line

Ident No.	Hg	Be	Cd	As	V	Mn	Ni	Sb	Cr	Zn	Cu	Pb	Se	B	F	Li	Ag	Sn	Fe	Sr	Na	K	Ca	Si	Mg	Ba					

Analysis Method: 1-NAA, 2-SSMS, 3-OES, 4-AA, 5-ASV, 6-XRF, and 7-other

Comments:

Other Analysis - Use Table B to fill analysis requested (above each column)

Mark (x) for specific analysis requested

Ident No.		Mass		Org. Mass								
5-73-002-585	X	6,856.9mg										
586	X	3,416.0mg										
587	X	3.5mg										
588	X		X	6.5mg								
589	X	14.4mg										
Analyst		J.T.X.		J.T.X.								
Method		#5		#5								

Comments: #587 - see comments for #5-73-002-575

SOURCE SAMPLE REQUEST & REPORT
(MUST BE FILLED OUT FOR EACH TEST RUN)

SAMPLING DATE 73 | 2 | 16 (YR | MO | DAY)

FIRST IDENT. NO. USED S-73-002-590

LAST IDENT. NO. USED S-73-002-594

TEST NO 73-RLC-2

RUN NO 2

RECD. / RCRD. 2-26-73

INDUSTRY Rock Drying + Grinding (USE TABLE A)

UNIT PROCESS OPERATION Raymond Grinding Mill

COMPANY IMC

AIR POLLUTION CONTROL Baghouse

COPIES TO

ADDRESS Nodaway, Fla.

FUEL USED N/A

P. O.

SAMPLING METHOD EPA 5

☐ INLET ☒ OUTLET

GAS VOLUME SAMPLED (METER VOL IN FT³) 115.999

LAB.

FILED

IDENT NO	DESCRIPTION OF SAMPLE OR SAMPLE FRACTION (use only for back check)	SAMPLE WT (SOLID) MG	SAMPLE VOL (LIQUID) ML	ANALYSIS REQUESTED - GENERAL COMMENTS (APPROX CONCENTRATIONS - POSSIBLE INTERFERENCES ETC) (INDICATE SPECIFIC ANALYSIS ON BACKSIDE)
S-73-002-590	FRONT ACETONE WASH	38.1	340	Part. Mass
591	FILTER # 73030	9.7	—	" "
592	IMP CONTENTS & WASH	58.7*	560	" "
593	IMP ORGANIC EXTRACT	3.2	160	" "
594	BACK ACETONE WASH	20.5	390	" "
H_2O volume				
Initial - 200				
Final - 299				
w/wash - 510				

COMMENTS: Please subtract blanks! Please store samples

*592 - contains small amount of silica gel - Silica gel crystals were removed but there appears to be some silica gel dust in the residue which cannot be removed from the residue. J.T.K.

SAMPLING CONTRACTOR PEDCO (IF APPLICABLE)

PROJECT OFFICER Elyde E. Riley

REQUEST REVIEWED BY [illegible] 2/23/73

DATE OF REQUEST 2-23-73

DATE ANALYSIS REQUESTED

DATE OF REQUEST (TO BE FILLED IN BY SSFAB)

EPA(DUR)245

REPORT OF ANALYSIS
TRACE ELEMENTS
ppm - for solid samples
ug/ml - for liquid samples

Mark (x) for specific analysis
Mark (x) in block to left of Ident. No. when requesting all analysis on that line

Ident No.	Hg	Be	Cd	As	V	Mn	Ni	Sb	Cr	Zn	Cu	Pb	Se	B	F	Li	Ag	Sn	Fe	Sr	Na	K	Ca	Si	Mg	Ba						

Analysis Method: 1-NAA, 2-SSMS, 3-OES, 4-AA, 5-ASV, 6-XRF, and 7-other

Comments:

Other Analysis - Use Table B to fill analysis requested above each column

Mark (x) for specific analysis requested

Ident No.		Mercury	Org. Mercury								
3-73-002-590	X	38.1 mg.									
591	X	9.7 mg.									
592	X	*58.7 mg.									
593			X 3.2 mg.								
594	X	20.5 mg.									
Analyst		J.T.X.	J.T.X.								
Method		#5	#5								

Comments: 592 - no comments for #3-73-002-575. * See comment on back side of this sheet.

SOURCE SAMPLE REQUEST & REPORT
(MUST BE FILLED OUT FOR EACH TEST RUN)

SAMPLING DATE 73 (YR) 2 (MO) 16 (DAY)

FIRST IDENT. NO. USED S-73-002-597

LAST IDENT. NO. USED S-73-002-601

TEST NO 73-RCC-1

RUN NO 3

RECD.

RCRD. 2-26-73

INDUSTRY Rock Drying + Grinding (USE TABLE A)

UNIT PROCESS OPERATION Raymond Grinding Mill

COMPANY IMC

AIR POLLUTION CONTROL Baghouse

COPIES TO

ADDRESS Noralyn, Fla.

FUEL USED N/A

P. O.

SAMPLING METHOD EPA-5

☒ INLET ☐ OUTLET

GAS VOLUME SAMPLED 62.555 (METER VOL IN FT³)

LAB.

FILED

IDENT NO	DESCRIPTION OF SAMPLE OR SAMPLE FRACTION	SAMPLE WT (SOLID) MG	SAMPLE VOL (LIQUID) ML	ANALYSIS REQUESTED - GENERAL COMMENTS (APPROX CONCENTRATIONS - POSSIBLE INTERFERENCES ETC) (INDICATE SPECIFIC ANALYSIS ON BACKSIDE)
S-73-002-597	FRONT ACETONE WASH	7,369.5	775	Part. Mass & Trace Metals
598	FILTER # 73014, 73015, 73035	3,946.7	—	" " " & " "
*599	IMP CONTENTS & WASH	7.8	600	" " " & " "
600	IMP COOLING EXTRACT	2.4	180	" " " & " "
601	BACK ACETONE WASH	15.5	355	" " " & " "
H_2O volume				
Initial - 200				
Final - 263				
w/wash - 550				

COMMENTS: Please subtract blanks! * Glass removed from sample before final weighing - JTK

SAMPLING CONTRACTOR PEDCO (IF APPLICABLE)

PROJECT OFFICER Clyde E. Riley

REQUEST REVIEWED BY 2/24/73

DATE OF REQUEST 2-13-73

DATE ANALYSIS REQUESTED

DATE OF REQUEST (TO BE FILLED IN BY SSFAB)

EPA/DUR/245

REPORT OF ANALYSIS
TRACE ELEMENTS
ppm - for solid samples
ug/ml - for liquid samples

Mark (x) for specific analysis
Mark (x) in block to left of Ident. No. when requesting all analysis on that line

	Ident No.	Hg	Be	Cd	As	V	Mn	Ni	Sb	Cr	Zn	Cu	Pb	Se	B	F	Li	Ag	Sn	Fe	Sr	Na	K	Ca	Si	Mg	Ba
X	597																										
X	598																										
X	599																										
X	600																										
X	601																										

Analysis Method: 1-NAA, 2-SSMS, 3-OES, 4-AA, 5-ASV, 6-XRF, and 7-other

Comments:

Other Analysis - Use Table B to fill analysis requested (above each column)

Mark (x) for specific analysis requested

Ident No.		Mn	Org. Mass								
3-73-002-597	X	7,369.5mg									
598	X	3,946.7g									
599	X	7.5mg									
600	X	g	X	2.4mg							
601	X	15.5mg									
Analyst		J.T.K.	J.T.K.								
Method		#5	#5								

Comments: #599 - see comments for #3-73-002-595

SOURCE SAMPLE REQUEST & REPORT
(MUST BE FILLED OUT FOR EACH TEST RUN)

SAMPLING DATE 73 | 2 | 16 (YR | MO | DAY)

FIRST IDENT. NO. USED S-73-002-602

LAST IDENT. NO. USED S-73-202-606

TEST NO. 73-RCC-2

RUN NO. 3

RECD. / MIXED 2-26-73

INDUSTRY Rock Drying & Grinding (USE TABLE A)

UNIT PROCESS OPERATION Raymond Grinding

COMPANY IMC

AIR POLLUTION CONTROL Baghouse

ADDRESS Nodlyn, Fla.

FUEL USED N/A

☐ INLET ☒ OUTLET

SAMPLING METHOD EPA 5

GAS VOLUME SAMPLED 119.701 (METER VOL IN FT³)

COPIES TO

P. O.

LAB.

FILE

IDENT NO	DESCRIPTION OF SAMPLE OR SAMPLE FRACTION	SAMPLE WT (SOLID) MG	SAMPLE VOL (LIQUID) ML	ANALYSIS REQUESTED - GENERAL COMMENTS (APPROX CONCENTRATIONS - POSSIBLE INTERFERENCES ETC) (INDICATE SPECIFIC ANALYSIS ON BACKSIDE)
S-73-002-602	FRONT ACETONE WASH	28.8	575	Part. Mass
603	FILTER # 73034	4.2	—	" "
*604	IMP CONTENTS & WASH (piece of glass in sampl)	8.2	835	" "
605	IMP CRYSTAL EXTRACT	5.4	275	" "
606	BACK ACETONE WASH	14.1	350	" "
H2O volumes				
Initial –	200			
Final –	336			
Impinger –	835			

COMMENTS: Please extract blanks! * Glass removed from sample before final weighings - J.T.X
Please save sample

SAMPLING CONTRACTOR PEDCo (IF APPLICABLE)

PROJECT OFFICER Clyde E. Riley

REQUEST REVIEWED BY JTX 2/23/73

DATE OF REQUEST 2-23-73

DATE ANALYSIS REQUESTED

DATE OF REQUEST (TO BE FILLED IN BY SSFAB)

EPA/DUR/245

REPORT OF ANALYSIS
TRACE ELEMENTS
ppm - for solid samples
ug/ml - for liquid samples

Mark (x) for specific analysis
Mark (x) in block to left of Ident. No. when requesting all analysis on that line

Ident No.	Hg	Be	Cd	As	V	Mn	Ni	Sb	Cr	Zn	Cu	Pb	Se	B	F	Li	Ag	Sn	Fe	Sr	Na	K	Ca	Si	Mg	Ba					

Analysis Method: 1-NAA, 2-SSMS, 3-OES, 4-AA, 5-ASV, 6-XRF, and 7-other

Comments:

Other Analysis - Use Table B to fill analysis requested above each column

Mark (x) for specific analysis requested

Ident No.		Mass	Org. Mass								
2-23-002-002	X	28.3 mg.									
603	X	4.2 mg									
604	X	3.3 mg.									
605	X		X	5.4 mg.							
606	X	14.1 mg.									
Analyst		J.T.K.	J.T.X								
Method		#5	#5								

Comments: #604 - see comments for #5-23-002-575.

SOURCE SAMPLE REQUEST & REPORT
(MUST BE FILLED OUT FOR EACH TEST RUN)

SAMPLING DATE 73 | 2 | 16 (YR | MO | DAY)

FIRST IDENT. NO. USED S-73-002-609

LAST IDENT. NO. USED S-73-002-612

TEST NO 73-RCC-2

RUN NO Blank

RECD. / RCRD. 2-26-73

INDUSTRY Rock Drying & Grinding (USE TABLE A)

UNIT PROCESS OPERATION Raymond Mill

COMPANY IMC

AIR POLLUTION CONTROL Baghouse

ADDRESS Nodyn, Fla.

FUEL USED N/A

☐ INLET ☐ OUTLET

SAMPLING METHOD N/A

GAS VOLUME SAMPLED N/A (METER VOL IN FT³)

COPIES TO

P. O.

LAB.

FILED

IDENT NO	DESCRIPTION OF SAMPLE OR SAMPLE FRACTION	SAMPLE WT (SOLID) MG	SAMPLE VOL (LIQUID) ML	ANALYSIS REQUESTED - GENERAL COMMENTS (APPROX CONCENTRATIONS - POSSIBLE INTERFERENCES ETC) (INDICATE SPECIFIC ANALYSIS ON BACKSIDE)
S-73-002-609	Water Blank	1.4	650	Part. Mass + Trace Metals
610	Acetone Blank	2.9	695	" " + " "
611	Ether - Chloroform Blank	0.1	150	" " + " "
612	3-Trace metal filter blanks	—	—	— — + " "
	Filter Nos. - 73-016			
	73-017			
	73-018			

COMMENTS: ~~Include # S-73-002-612 for trace only! Trace metal analysis not required for blank!~~

SAMPLING CONTRACTOR PEDCo (IF APPLICABLE)

PROJECT OFFICER Clyde E. Riley

REQUEST REVIEWED BY [signature] 2/23/73

DATE OF REQUEST 2-23-73

DATE ANALYSIS REQUESTED

DATE OF REQUEST (TO BE FILLED IN BY SSFAB)

EPA(OUR)245

REPORT OF ANALYSIS
TRACE ELEMENTS
ppm - for solid samples
ug/ml - for liquid samples

Mark (x) for specific analysis
Mark (x) in block to left of Ident. No. when requesting all analysis on that line

Ident No.	Hg	Be	Cd	As	V	Mn	Ni	Sb	Cr	Zn	Cu	Pb	Sc	B	F	Li	Ag	Sn	Fe	Sr	Na	K	Ca	Si	Mg	Ba						
X 609																																
X 610																																
X 611																																
X 612																																

Analysis Method: 1-NAA, 2-GCMS, 3-OES, 4-AA, 5-ASV, 6-XRF, and 7-other

Comments:

Other Analysis - Use Table B to fill analysis requested (above each column)

Mark (x) for specific analysis requested

Ident No.	Mercury	Org. Mercury									
571-000-609	X 1.4 mg.										
610	X 2.9 mg.										
611	X	X 0.1 mg.									
Analyst	J.T.K.	J.T.K.									
Method	#5	#5									

Comments: #609 - was extracted and then concentrated at 20°C to be consistent with the samples.

APPENDIX F

SAMPLE NUMBER LOG

The EPA Contract Officer designated sample numbers and labeled polyethelene and glass (Wheaton) bottles. There was no difficulty in keeping samples straight since all clean up immediately followed test runs. All filters were numbered and logged in the emission testing data sheets to eliminate any possibility of mixup. Table 1 identifies the number assigned to the pollutant fraction from each area and run.

TABLE F1

IMC

Noralyn, Florida

Sample Identification Log

Run No. Part 1 — Date February 16, 1973

Sample No.	Sampled Area	Fraction
S-73-002-573	Baghouse Inlet	Probe acetone wash
574	" "	Filter
575	" "	Impinger H_2O + wash
576	" "	Ether-chloroform ext.
577	" "	Impinger acetone wash
S-73-002-578	Baghouse Outlet	Probe acetone wash
579	" "	Filter
580	" "	Impinger H_2O + wash
581	" "	Ether-chloroform ext.
582	" "	Impinger acetone wash
S-73-002-583	Raymond Mill Inlet	Raw material in [redacted]
584	" " "	rock out

Run No. Part 2

Sample No.		
S-73-002-585	Baghouse Inlet	Probe acetone wash
586	" "	Filter
587	" "	Impinger H_2O + wash
588	" "	Ether-chloroform ext.
589	" "	Impinger acetone wash
S-73-002-590	Baghouse Outlet	Probe acetone wash
591	" "	Filter
592	" "	Impinger H_2O + wash
593	" "	Ether-chloroform ext.
594	" "	Impinger acetone wash
S-73-002-595	Raymond Mill Inlet	Raw material in [redacted]
596	" " "	rock out

Run No. Part 3 — Date February 16, 1973

Sample No.	Sampled Area	Fraction
S-73-002-597	Baghouse Inlet	Probe acetone wash
598	" "	Filter
599	" "	Impinger H_2O + wash
600	" "	Ether-chloroform ext.
601	" "	Impinger acetone wash

TABLE F1 (Cont'd.)

Run No. Part 3

Date February 16, 1973

Sample No.	Sampled Area	Fraction
S-73-002-602	Baghouse Outlet	Probe acetone wash
603	" "	Filter
604	" "	Impinger H_2O + wash
605	" "	Ether-chloroform ext.
606	" "	Impinger acetone wash
S-73-002-607	Raymond Mill Inlet	Raw material in [redacted]
608	" " "	rock out

APPENDIX G

TEST LOG

The field crew chief kept a log of the daily activities during the test duration. Equipment preparation, transportation time, and report preparation was not logged in this manner.

The overall log is shown in Figure G1 in its original format. The crew chief numbered the log sheet "3" because the log continued from a previous test run at another site. A more precise log defining sampling time is shown in Figure G2.

SHEET 3

Figure G1. Overall Test Log

CHRONOLOGICAL LIST OF NOTES THROUGHOUT PROJECT _____ (NOT COVERED BY DAILY PERSONNEL AND LOG SHEET)

DATE	TIME	EVENT
2-15-73 CONT	1445	Go to lunch in BARTOW
	1545	Back on site - begin set up. Run preliminary traverse on inlet and outlet, orsat is done on outlet
	1900	Crew leaves Rock Grinding site [10.0 hours test time]
2-16-73	715	Leave for Noralyn Rock Grinding Site
	800	Arrive at Noralyn Site - Proceed to set up equipment
	1125	Inlet and Outlet start on Test #7 Particulate
	1315	Inlet finishes Test #7 Particulate
	1330	Outlet finishes Test #7 Particulate
	1405	Inlet and Outlet starts Test #8 Particulate; short delay on outlet.
	1647	Inlet finishes Test #8 Particulate
	1655	Outlet finishes Test #8 Particulate
	1705	Process is down
	1715	Process is running again - Crew waits for warm-up
	1745	Inlet and Outlet start on Test #9 Particulate
	1940	Inlet finishes Test #9 Particulate
	1945	Outlet finishes Test #9 Particulate
	2200	Crew packs up and leaves Rock Grinding site [14.0 hours test time]

IMC Testing-Noralyn Plant

Rock Grinding Operation

Date	Location	Port	Run	Pollutant	Clock Time Began	Clock Time Ended	Elapsed Time	Comments
2/16/73	Inlet	B	7	Part.	1126	1150	24	
		B			1153	1211	18	changed filters
		A			1231	1252	21	
		A			1254	1315	21	changed filters
							84	Total Min.
2/16/73	Outlet	A	7	Part.	1125	1155	30	
		B			1200	1230	30	
		C			1230	1300	30	
		D			1300	1330	30	
							120	Total Min.
2/16/73	Inlet	A	8	Part.	1404	1406	2	process problem
		A			1442	1516	34	changed filter
		A			1518	1524	6	
		B			1551	1612	21	
		B			1618	1633	15	filter change
		B			1641	1647	6	process down
							84	Total Min.
2/16/73	Outlet	A	8	Part.	1444	1514	30	
		B			1517	1547	30	
		C			1548	1618	30	
		D			1618	1635	17	
		D			1641	1654	13	process down
							120	Total Min.
2/16/73	Inlet	B	9	Part.	1746	1819	33	
		B			1823	1832	9	changed filter
		A			1854	1918	24	
		A			1921	1939	18	changed filter
							84	Total Min.

Figure G2. (Cont'd.)

IMC Testing-Noralyn Plant

Rock Grinding Operation

Date	Location	Port	Run	Pollutant	Clock Time Began	Clock Time Ended	Elapsed Time	Comments
2/16/73	Outlet	A	9	Part.	1742	1812	30	
		B			1813	1843	30	
		C			1844	1914	30	
		D			1915	1945	30	
							120	Total Min.

APPENDIX H

SAMPLE HANDLING LOG

The sample handling log identifies the individuals associated with the sample during each phase of the test. The data sheet originated with the meter technicians, and was passed along until the sample was ultimately transferred into the shipment bottles.

SAMPLE HANDLING LOG

Task or Contract Number 3082-L

Source Identification IMC Rock Grinder Inlet

Test Run Number 7

Pollutant(s) in Sample Particulate

Task	Date	Time	Personnel	Remarks
Sampling				
Probe Technician	2/16/73	1126-1315	Parnell	
Meter Technician		1126-1315	Kulujian	
Other			-	
Transport of Train to Cleanup Site		1320	Parnell, Kulujian	
Train Disassembly		1410	Geiger	
Train Cleanout		1415	Geiger	
Packing and Storage		1450	Geiger	
Shipment to Analysis Site	2/18/73		Parnell	
Lab Analysis			EPA	
Write Up			Kulujian	

SAMPLE HANDLING LOG

Task or Contract Number 3082-L

Source Identification IMC Rock Grinder Outlet

Test Run Number 7

Pollutant(s) in Sample Particulate

Task	Date	Time	Personnel	Remarks
Sampling				
Probe Technician	2/16/73	1125-1330	Meer	
Meter Technician		1125-1330	O'Connor	
Other			-	
Transport of Train to Cleanup Site		1340	Meer	
Train Disassembly		1420	Geiger	
Train Cleanout		1515	Geiger	
Packing and Storage		1600	Geiger	
Shipment to Analysis Site	2/18/73		Parnell	
Lab Analysis			EPA	
Write Up			Kulujian	

SAMPLE HANDLING LOG

Task or Contract Number 3082-L

Source Identification IMC Rock Grinder Inlet

Test Run Number 8

Pollutant(s) in Sample Particulate

Task	Date	Time	Personnel	Remarks
Sampling				
Probe Technician	2/16/73	1404-1647	Parnell	
Meter Technician		1404-1647	Kulujian	
Other			-	
Transport of Train to Cleanup Site		1650	Riley	
Train Disassembly		1705	Riley, Geiger	
Train Cleanout		1710	Geiger	
Packing and Storage		1755	Riley, Geiger	
Shipment to Analysis Site	2/18/73		Parnell	
Lab Analysis			EPA	
Write Up			Kulujian	

SAMPLE HANDLING LOG

Task or Contract Number 3082-L

Source Identification IMC Rock Grinder Outlet

Test Run Number 8

Pollutant(s) in Sample Particulate

Task	Date	Time	Personnel	Remarks
Sampling				
Probe Technician	2/16/73	1444-1654	Meer	
Meter Technician		1444-1654	O'Connor	
Other			-	
Transport of Train to Cleanup Site		1700	Meer, Riley	
Train Disassembly		1725	Geiger	
Train Cleanout		1810	Riley	
Packing and Storage		1900	Riley, Geiger	
Shipment to Analysis Site	2/18/73		Parnell	
Lab Analysis			EPA	
Write Up			Kulujian	

SAMPLE HANDLING LOG

Task or Contract Number 3082-L

Source Identification IMC Rock Grinder Inlet

Test Run Number 9

Pollutant(s) in Sample Particulate

Task	Date	Time	Personnel	Remarks
Sampling				
Probe Technician	2/16/73	1746-1939	Parnell	
Meter Technician		1746-1939	Kulujian	
Other			-	
Transport of Train to Cleanup Site		1940	Kulujian	
Train Disassembly		1945	Riley	
Train Cleanout		1950	Riley, Geiger	
Packing and Storage		2040	Riley, Geiger	
Shipment to Analysis Site	2/18/73		Parnell	
Lab Analysis			EPA	
Write Up			Kulujian	

Personnel who were involved with the emission testing at the IMC Rock Grinding Operation in Norayln, Florida, are listed below.

Participant	Affiliation	Title
C. Riley	EPA	Contract Officer
J. Peoples	EPA	Process Engineer
R. Hearon	IMC	Chemical Engineer
B. Harwood	IMC	Plant Engineer
N. Kulujian	PEDCo	Field Supervisor
A. O'Connor	PEDCo	Senior Technician
E. Meer	PEDCo	Technician
G. Parnell	PEDCo	Technician
J. Geiger	PEDCo	Lab Analyst

APPENDIX J

PRESURVEY REPORT

PEDCo-ENVIRONMENTAL
SUITE 8 · ATKINSON SQUARE
CINCINNATI, OHIO 45246
513/771-4330

PRE-SURVEY REPORT AND ESTIMATE OF MAN-HOURS REQUIRED TO PERFORM SPECIFIED TESTS AT IMC CORPORATION AT KINGSFORD, FLORIDA AND NORALYN, FLORIDA

Submitted to: C. E. Riley
Office of Air Programs
Emission Testing Branch, ATD
Environmental Protection Agency
Research Triangle Park,
North Carolina 27711

Contract No. 68-02-0237, Task #12

By: Norman J. Kulujian

January 29, 1973

1.0 INTRODUCTION

Pre-surveys of the IMC Corporation phosphorus rock drying operation at Kingsford, Florida, and phosphorus rock grinding operation at Noralyn, Florida, were conducted on January 15, 16, and 17, 1973. The pre-survey was conducted in order to obtain: 1) the level of effort, 2) knowledge of the specific equipment needed, and 3) plant additions and alterations required to conduct specific emission tests at the two plants. In addition to the "level of effort" required, a brief description of the proposed testing procedure is presented.

2.0 SOURCE INFORMATION

2.1 Location

The two IMC plants mine pebble phosphate rock and refine it for use in a wide variety of products for agriculture and industry. The two sites, located in Polk County, Florida, are approximately fifteen miles apart and twenty minutes away from the motel at which the stack sampling crew will reside.

2.2 Process Description

The process will be described in the final report. A general flow diagram is shown in Figure 1. The grinding operation at the Noralyn plant is under roof and is equipped with a baghouse. Particulate matter caught by the fabric

Figure 1.

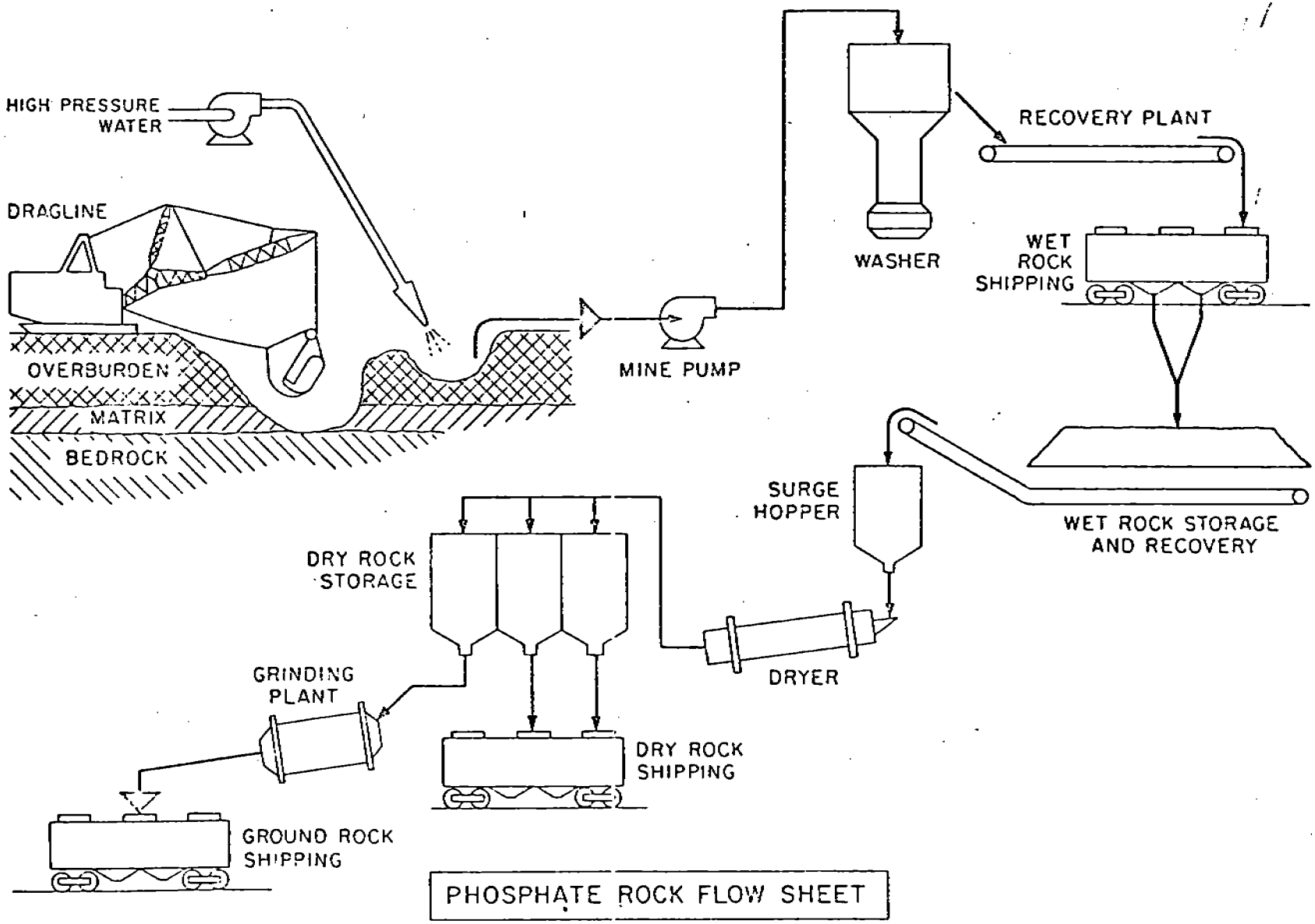
HIGH PRESSURE WATER
DRAGLINE
OVERBURDEN
MATRIX
BEDROCK
MINE PUMP
WASHER
RECOVERY PLANT
WET ROCK SHIPPING
WET ROCK STORAGE AND RECOVERY
SURGE HOPPER
DRYER
DRY ROCK STORAGE
DRY ROCK SHIPPING
GRINDING PLANT
GROUND ROCK SHIPPING
PHOSPHATE ROCK FLOW SHEET

filters is not periodically emptied; they are recirculated through the rock grinding process.

The rock drying site is located outdoors. Access to the inlet of the rock drier will be difficult, due to the configuration and the short distance between the fans and scrubber water sprays.

2.2.1 Operations To Be Sampled

Rock Grinding - Noralyn

Three tests will be conducted to determine particulate concentrations at the inlet and outlet of the process. Sampling locations are defined in Figures 2 and 3.

Preliminary runs similar to method 4 of the Federal Register will be performed to determine the moisture content in the stack gases. Samples of the raw and final products will be taken as the tests are being performed.

Rock Drying - Kingsford

Three fluoride and three particulate tests will be made upstream and downstream of the scrubber. The inlet duct is a rectangular, horizontal duct and the outlet is a vertical circular orifice. Figures 4 and 5 illustrate the sampling location. A moisture run is needed prior to testing on the inlet to determine moisture concentration. The outlet will be assumed to be saturated. Quantities of raw and

Figure 2. Rock Grinding Inlet

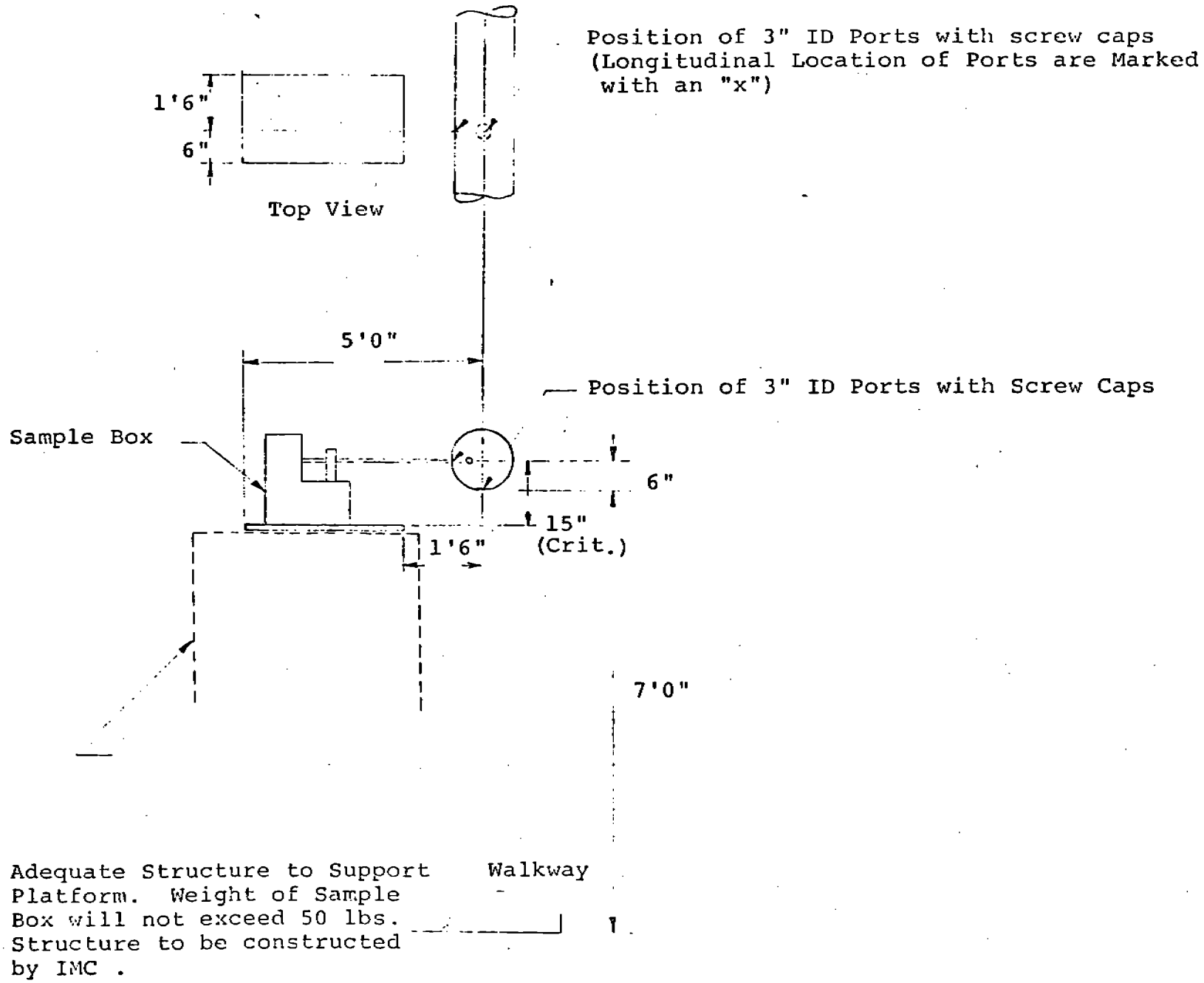

Figure 3. Rock Grinding Outlet

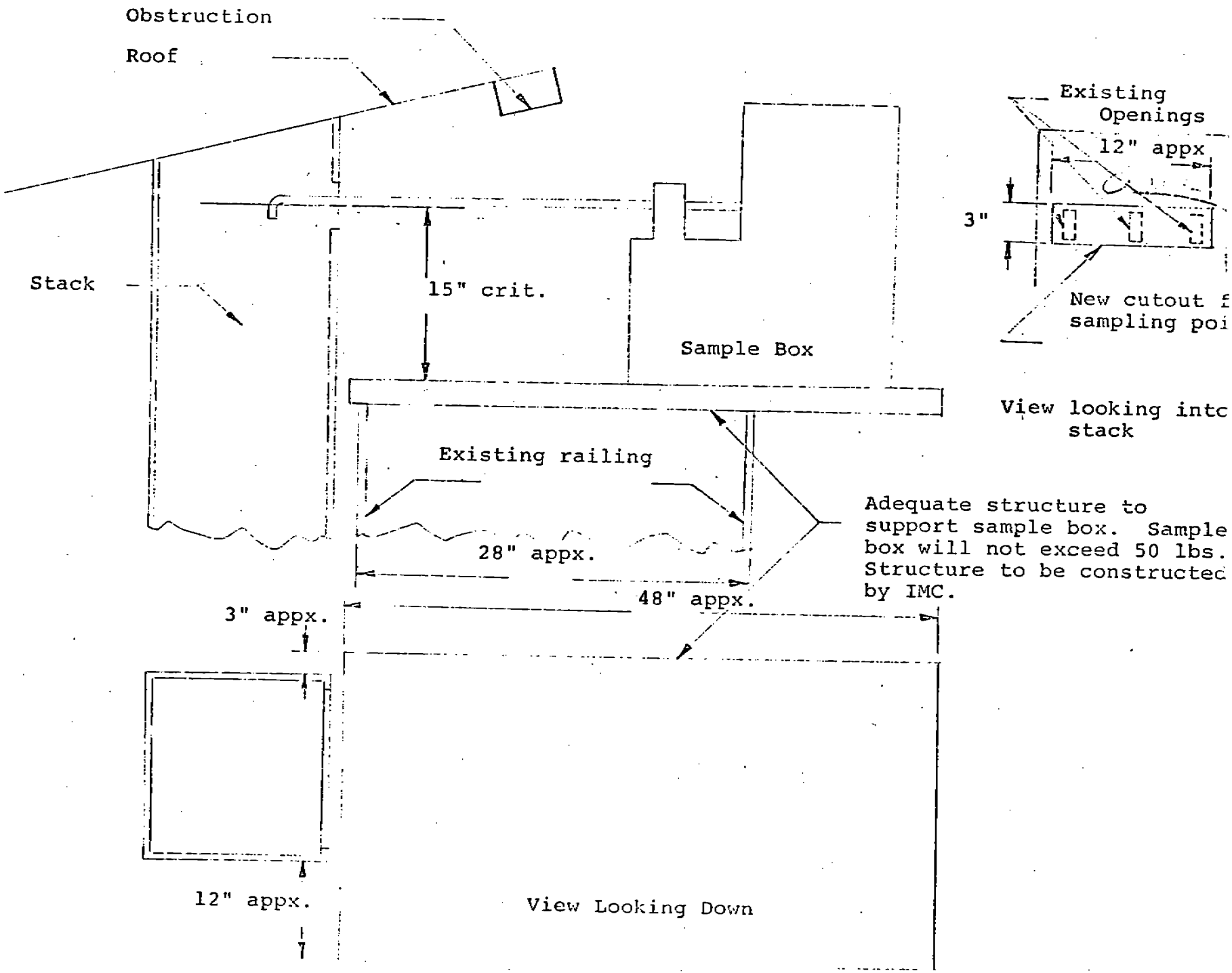

Figure 4. Rock Drying Inlet

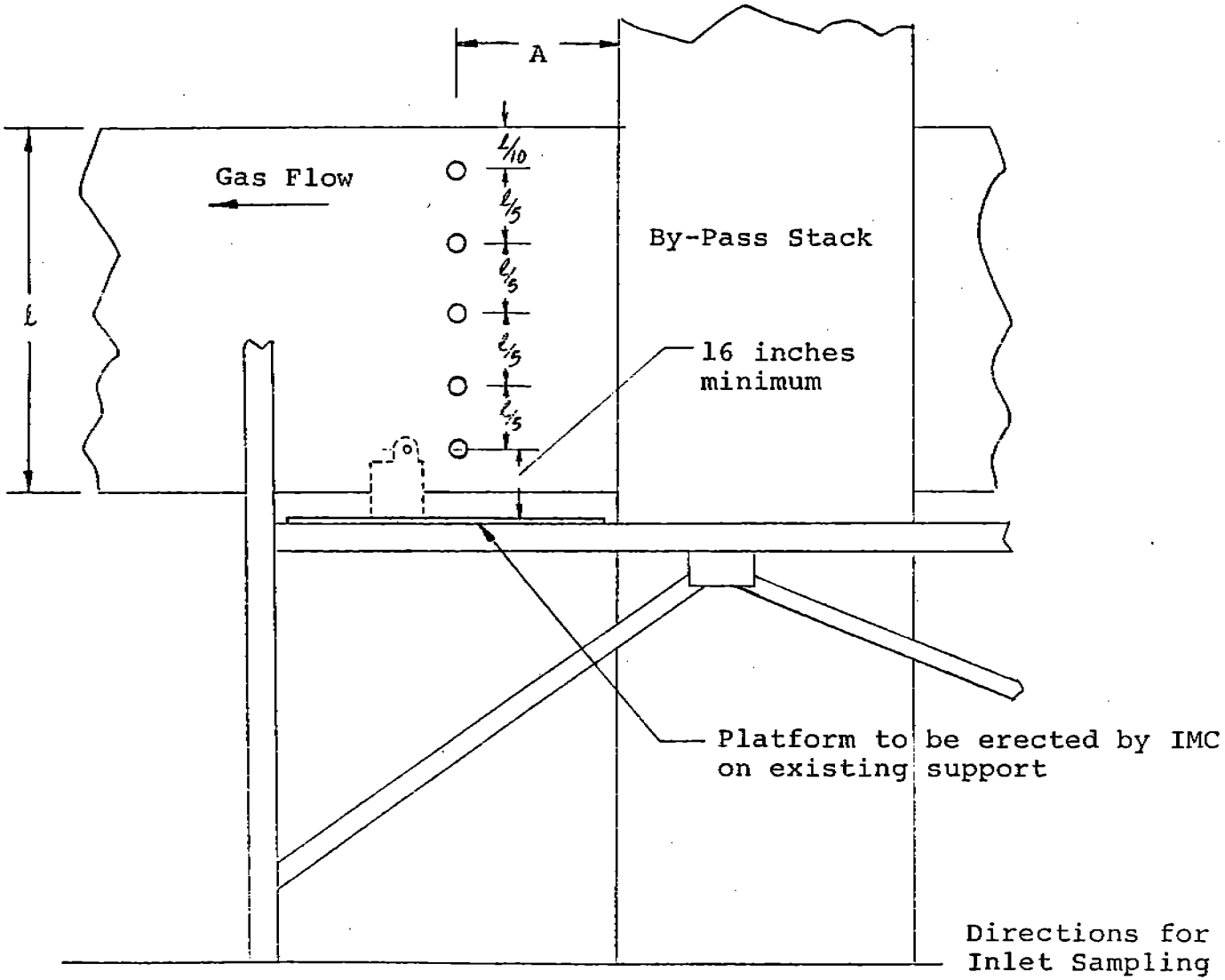

Directions for Locating Ports for Inlet Sampling

1. Pick a length A that can be easily sampled from a scaffolding placed between the by pass and existing stacks.
2. Measure the height of the duct l.
3. Place six 3" ID ports with screw c in vertical line with the spacings shown. Ports will be on the side o the by-pass stack.

Figure 5. Rock Drying Outlet

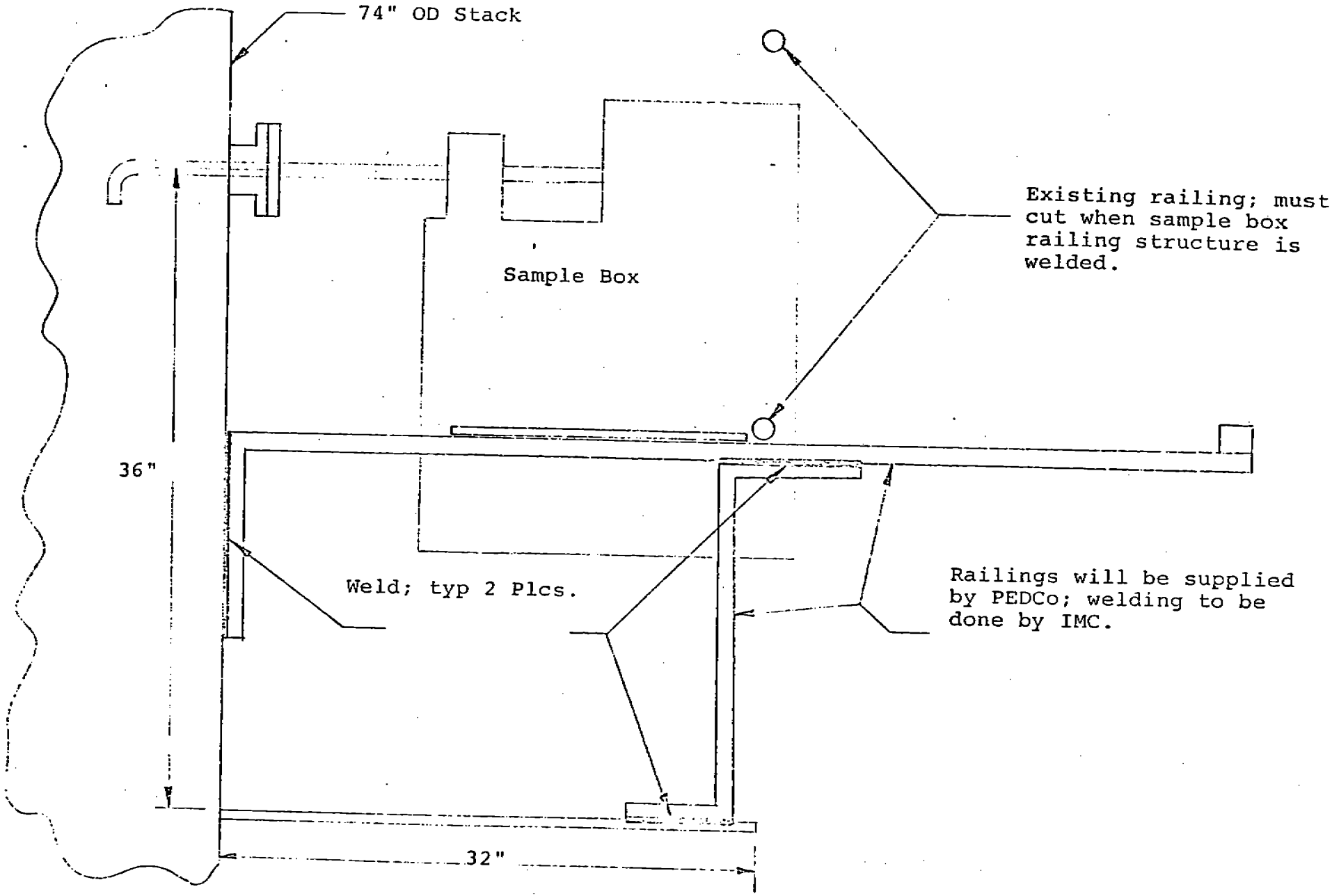

Picture typical at both ports

finished material as well as scrubber water samples will be taken when sampling. An opening will be provided to gain access to scrubber water.

3.0 EMISSION TESTING PROGRAM

Specific information on testing is shown in Table 1. Both a long and a short probe will be used per test on the drier outlet due to the size and height of the sampling locations.

4.0 SAMPLING SCHEDULE AND MANPOWER REQUIREMENTS

Sampling of the grinding and drying operations at IMC are scheduled for the week of February 12, 1973. The sampling program is tentatively a one week operation.

Table 2 presents an estimate of the hours required for conducting this work by category and by task with a six (6) man field team. The 6 man team is justified due to the unavailability of a clean up area close to the sampling site. One man is needed for the transportation of items between the testing site and the laboratory facilities set up in the motel area. The estimate of man hours is based on continual operation of the process and good weather. Particulate and fluoride analysis will not be performed by PEDCo.

The sampling schedule is shown in Table 3. Any complications or unforeseen delays will result in the test crew remaining in Florida until the task is completed.

Table 1. SAMPLING PORT DATA

Sampling Point	Dimensions	No. of Points	Points Per Port	Total Points	Sample Time Per Ports (minutes)	Total Time (minutes)
Grind Inlet	12" Round	2	14	28	3	84
Grind Outlet	12" x 14"	4	6	24	5	120
Dry Inlet	56" x 82"	5	10	50	2	100
Dry Outlet	74" Round	2	24	48	2.5	120

Table 2. MANPOWER REQUIREMENTS FOR IMC CORPORATION

Task	Manhours by Category				
	Senior	Intermediate	Technician	Clerical	Total
1. Equipment Preparation and Cleanup					
Mechanical			64		64
Chemical			16		16
2. Travel					
Truck[a]			40		40
Air			24		24
3. Field Set Up and Testing[b]		189	189		378
4. Calculations and Report Preparation	10	16	30	8	64
5. Planning and Administration	10			4	14
TOTALS	20	205	363	12	600

a) Includes trip to Raleigh, North Carolina to deliver samples.

b) Includes 3 intermediate and 3 technician personnel.

Table 3. SAMPLING SCHEDULE FOR IMC CORPORATION

DATE	ACTIVITY
Feb. 7	Technician starts to Florida with sampling apparatus.
Feb. 8	Technician arrives in Florida.
Feb. 9	Technician visits IMC sampling sites, notes if pre-test work is acceptable, and gives IMC testing rig (needed for drier outlet) to weld to existing catwalk.
Feb. 11	Crew arrives in Florida.
Feb. 12	Equipment is set up at rock drying site. Moisture train is run at inlet.
Feb. 13	Particulate runs 1 and 2 are completed.
Feb. 14	Particulate run 3 and fluoride run 1 are completed.
Feb. 15	Fluoride runs 2 and 3 are completed.
Feb. 16	Equipment is set up at rock grinding site. Moisture train is run. Particulate tests 1 and 2 are completed.
Feb. 17	Particulate tests 2 and 3 are completed. Equipment is packed up and crew leaves Florida.
Feb. 18	Technician starts to North Carolina with samples.
Feb. 19	Technician arrives at North Carolina and delivers samples.
Feb. 21	Technician arrives in Cincinnati.

5.0 SPECIAL REQUIREMENTS

Sampling site modifications are required as shown in Figures 2 through 5. PEDCo will send a technician to the test site prior to the arrival of the crew to ensure that scaffolding, boarding, sampling ports, and catwalk modifications have been properly added or reworked.

Ref. 3

Emission Test Report
Review Checklist

Reviewer: Michelle Ramsey
Review Date: 27 April 1992

A. Background Information

1. Facility name: International Minerals And Chemical Corp.

   Location: Noralyn, Florida

2. Source category: Phosphate Rock

3. Test date: February, 1973

4. Test sponsor: US EPA

5. Testing contractor: PEDCo - Environmental Specialists, Inc.

6. Purpose of test: establish guide for NSPS as authorized by CAA of 1970

7. Pollutants measured

   (PM) PM-10 CO SO_2 NO_x VOC Pb CO_2

   Others (list): ~~fluorides~~

8. Process overview: On an attached page provide a block diagram of the unit operations and associated air pollution control systems at the facility. Identify process tested with letters from the beginning of the alphabet (A, B, C, etc.) and APC systems with letters from end of alphabet (V, W, X, etc.). Also identify test locations with Arabic numerals (1,2,3, ...). Using the ID symbols from that sketch complete the table below that identifies processes or unit operations tested.

Test ID	Process	Process ID	Emissions tested		APCD (controlled emissions only)
			Uncontrolled	Controlled	
1,2	Grinding	A	✓	✓	baghouse

B. Process Information

1. Provide a brief narrative description of the process. With as much detail as possible, (e.g., if a furnace or conveyor system is used, identify the type of unit) describe the equipment used for those operations tested. (Note: If process description provided in test report is adequate, attach copy or reproduce here.)

Stored rock is transferred to a mill by a conveyer belt. Different ducks are used for the ground product and exhaust gases from the mill. The exhaust gases are cleaned in a baghouse. The cleaned exhaust is pulled up through the stack by an induced draft fan. The material caught in the baghouse is recycled back to the milling operation.

Attached:

process description
diagram of phosphate rock grinder
phosphate rock flow sheet

IV. PROCESS DESCRIPTION

A phosphate rock plant flow diagram, shown in Figure 4.1, illustrates the steps of the process in relation to the grinding operation. After the phosphate rock is mined and dried, it is ready to be ground.

The Noralyn, Florida IMC plant uses the swept air principle of grinding the phosphate rock. A picture of the grinding operation is shown in Figure 4.2. Each of three mills can process approximately 35 tons of rock per hour. The velocity of the air through the Raymond Mills governs the particle size of the ground rock. The ground product is fed to a rail car where it is shipped to fertilizer or elemental phosphorus plants. Exhaust gases pass through a baghouse and an induced draft fan before being emitted to the atmosphere. The baghouse collection hopper is ducted back to mills, recycling the caught particles.

Two different milling configurations were present at the Noralyn plant. These are discussed extensively in Appendix C.

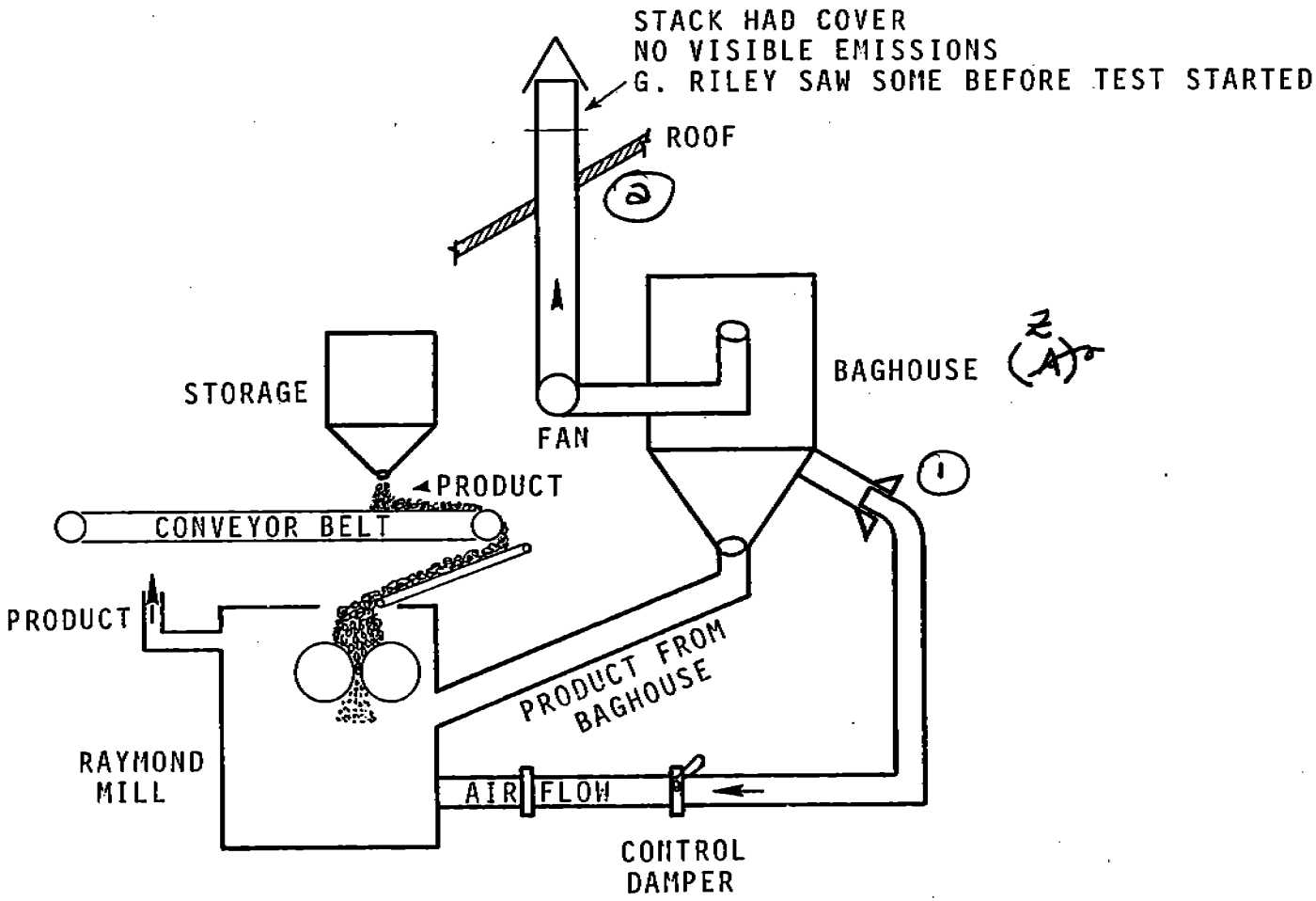

Figure 4.2 Diagram of phosphate rock grinder at IMC plant, Noralyn, Florida.

Figure 1.

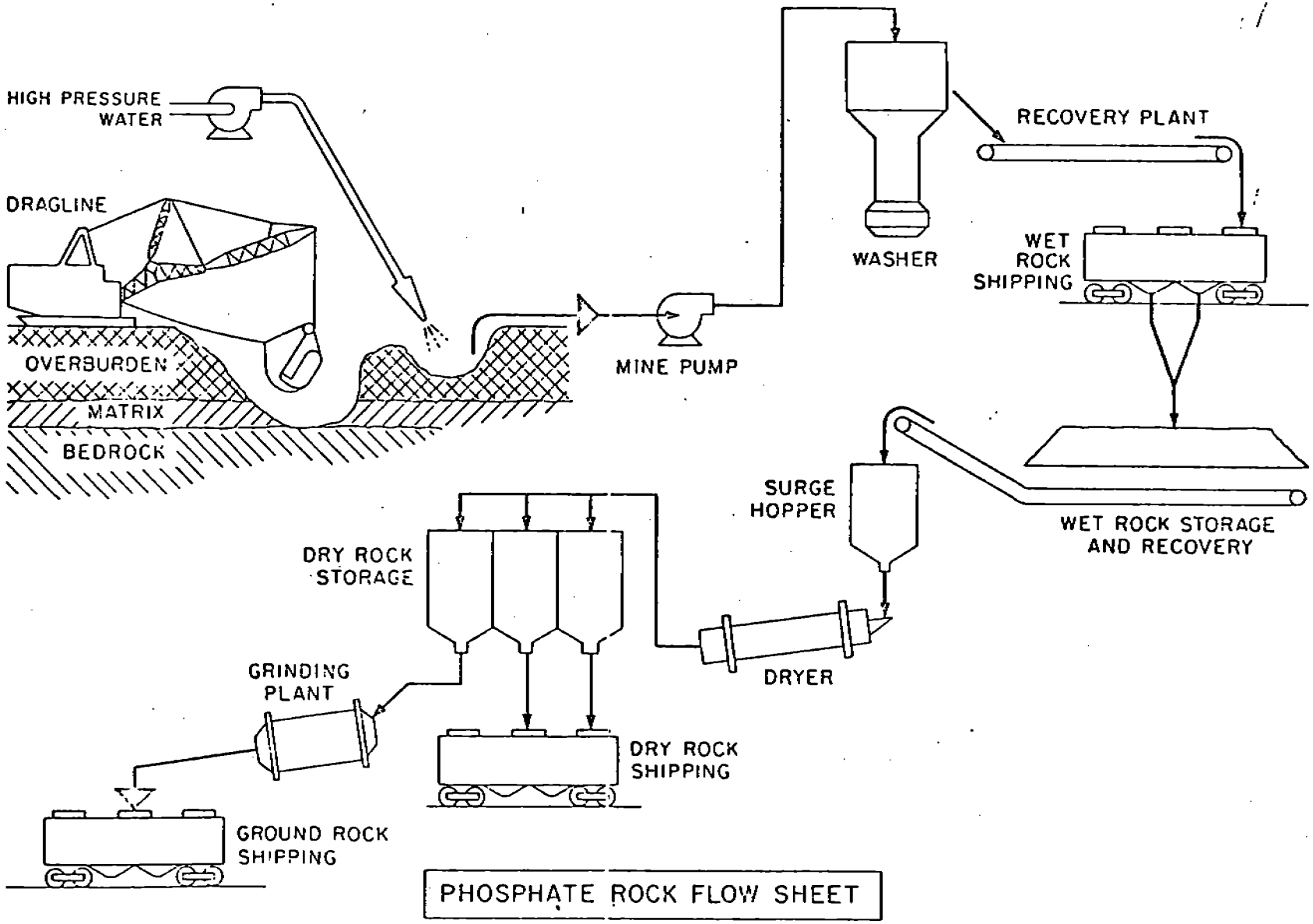
HIGH PRESSURE WATER
DRAGLINE
OVERBURDEN
MATRIX
BEDROCK
MINE PUMP
WASHER
RECOVERY PLANT
WET ROCK SHIPPING
WET ROCK STORAGE AND RECOVERY
SURGE HOPPER
DRYER
DRY ROCK STORAGE
DRY ROCK SHIPPING
GRINDING PLANT
GROUND ROCK SHIPPING
PHOSPHATE ROCK FLOW SHEET

2. For each process tested list feedstock materials and products. Indicate if activity factors are for feed (F) rate or product (P) rate.

?

Process ID	Feedstock materials	Products	Basis for activity factor	F/P
A	1 65-200 grind (65% through 200 mesh screen)	phosphate rock	feed	F
	2 65-200 grind	"	"	F
	3 90-100 grind	"	"	F

Basis for data: page 10
(Indicate page/table Nos. in test report)

3. For each process or operation tested and each test run note process capacity and operating rate during test.

production rates

Process ID	Capacity	Units	Test run	Process rate	Units
A	35	tons/hr	~~1~~ 7	36	tons/hr
			~~2~~ 8	36	tons/hr
			~~3~~ 9	33	tons/hr
			4		
			1		
			2		
			3		
			4		
			1		
			2		
			3		
			4		
			1		
			2		
			3		
			4		

Basis for data: Appendix A, Tables A-1, A-2 & A-3

C. Air Pollution Control Systems Tested

1. For each air pollution control system pollution control system identified in A.8, note the following

ID	Type of APCD	Manufacturer	Model No.
Z	baghouse		

Note: Be as specific as possible in identifying APCD. For example, indicate "pulse jet fabric filter" rather than simply "fabric filter."

2. For each system identified above, provide a narrative description. For fugitive systems describe capture techniques as well as the removal techniques (use a separate page if necessary)

3. Using the attached parameter list for guidance complete the table below. (Use additional pages as needed.)

APCD ID	Parameter	Units	Readings			
			Run ~~1~~ 7	Run ~~2~~ 8	Run ~~3~~ 9	~~Run 4~~
Z						
Type of APCD: baghouse						
Type of APCD:						
Type of APCD:						

D. Sampling and Analysis Methods

1. Complete the following table

Test location	Pollutant	S & A method	Reference/ conditional method	Deviations noted
			Y/N	Y/N
Prior to entering baghouse of rock grinder No. 4	PM	Method 5	Y/N	Y/N
			Y/N	Y/N
			Y/N	Y/N
			Y/N	Y/N
			Y/N	Y/N
After baghouse of rock grinder No. 4	PM	Method 5	Y/N	Y/N
			Y/N	Y/N
			Y/N	Y/N
			Y/N	Y/N
			Y/N	Y/N
			Y/N	Y/N
			Y/N	Y/N
			Y/N	Y/N
			Y/N	Y/N
			Y/N	Y/N
			Y/N	Y/N
			Y/N	Y/N
			Y/N	Y/N
			Y/N	Y/N
			Y/N	Y/N
			Y/N	Y/N
			Y/N	Y/N
			Y/N	Y/N
			Y/N	Y/N
			Y/N	Y/N

2. If a method used was not a reference or conditional method, provide a narrative discussion including any data manipulation needed to make results correspond to reference or conditional method results.

3. Describe any deviations ~~identified above.~~

see attached Ⓐ.

NOTE: Q loss from inlet to outlet due to loss through ducting, control device or dampers.

Reagent in Orsat apparatus produced questionable exhaust gas analysis, so values of ambient air assumed for calculations

DSCF + DSCFM @ 70°F, 29.92 in. Hg.

Inlet concentrations heavy and several filter changes needed.

E. Emission Data Documentation Appendix A

1. Tabulate the following stack gas data from the test report. (Use additional pages as needed.)

Test ID	Parameter	Units	Values reported			
			Run ~~1~~ 7	Run ~~2~~ 8	Run ~~3~~ 9	~~Run 4~~
1	Stack temperature	°F	203	205	200	
	Moisture	%	6.07	5.91	5.89	
	Oxygen					
	Volumetric flow, actual	acfm	3835	3822	4026	
	Volumetric flow, standard	dscfm	2916	2903	3075	
	Percent isokinetic	%	105.0	*213.8	103.4	
	Pollutant concentration:					
	PM	gr/dscf	0.011	0.008	0.006	
	PM, front	gr/dscf	3.708	2.694	2.784	
	PM, total	gr/dscf	3.719	2.702	2.790	
2	Stack temperature	°F	161	161	160	
	Moisture	%	5.32	6.05	6.53	
	Oxygen					
	Volumetric flow, actual	acfm	3295	3256	3386	
	Volumetric flow, standard	dscfm	2720	2654	2751	
	Percent isokinetic	%	98.2	98.3	98.7	
	Pollutant concentration:					
	PM	gr/dscf	0.00641	0.01128	0.00366	
	PM, front	gr/dscf	0.00849	0.00656	0.00435	
	PM, total	gr/dscf	0.01490	0.01784	0.00801	
	Stack temperature					
	Moisture					
	Oxygen					
	Volumetric flow, actual					
	Volumetric flow, standard					
	Percent isokinetic					
	Pollutant concentration:					

Run 8 not valid (2/4/92) (Meter malfunction)

[Total - front = inorganic condensibles
$C_{AO} - C_{AN}$ = above PM value in gr/dscf]

* wrong diameter nozzle inserted on probe (0.125 in. instead of 0.180 in. nozzle)

(A)

Run 7. Outlet crew had trouble with sampling train. An adequate vacuum could not be pulled during the leak check. The leak could not be found; when the meter box was replaced, the leak check was satisfactory.

Run 8. The inlet crew inserted the wrong diameter nozzle on the probe. This was noticed midway during the test when changing sampling ports. The process went down as a piece of lumber entered the grinder, which took about ten minutes to remove.

Run 9. The inlet crew broke an impinger connector upon transferring sample box to the vertical port. The connector was replaced, and the remains of the broken impinger were placed in a container to later be acetone washed in the clean up area.

2. Tabulate pollutant mass flux rates

Test ID	Pollutant	Units	Mass flux rates			
			Run ~~1~~ 7	Run ~~2~~ 8	Run ~~3~~ 9	~~Run 4~~
1	PM	lb/hr	0.275	0.189	0.169	→ condensable partic
	PM, front	lb/hr	92.686	67.027	73.373	→ filterable partic.
	PM, total	lb/hr	92.961	67.216	73.542	→ total particulate
						Run 8 is not valid (inlet)
2	PM	lb/hr	0.149	0.257	0.086	
	PM, front	lb/hr	0.198	0.149	0.102	
	PM, total	lb/hr	0.347	0.406	0.188	

3. Present example emission factor calculations below.

$$P_{tt} = \frac{C_{Ax}}{T_c} = EF$$

$$P_{tt} - P_{ts} = EF$$

in: $0.008 + 0.006 + 0.005 = 0.019$

$0.019/3 = 0.0063$

out: $0.0041 + 0.0072 + 0.0026 = 0.0139$

$0.0139/3 = 0.0046\overline{3}$

Run 8 (inlet)
not valid. Should
use only Runs
7 & 9 for inlet
Emission factors

4. Tabulate emission factors

Process	Pollutant	Units	Average emission factor	
			Uncontrolled	Controlled
A	PM	lb/ton	0.006$\bar{3}$	0.00463
	PM, front	lb/ton	2.219$\bar{3}$	0.0042333
	PM, total	lb/ton	2.2256667	0.0088666

condensable part
filterable part
total part

ATTACHMENT A
APCD PARAMETERS

Type of APCD	Parameters
Fabric filter	Cleaning mechanism Bag type Cleaning frequency Air to cloth ratio (A/C) Pressure drop Inlet temperature
ESP	Type (wet or dry) Number of fields Rapping cycle (if dry) Specific Collection Area (SCA) Particulate resistivity (if known) Spark rate Current and power levels
Venturi (or other high energy) scrubber	Pressure drop Liquid/gas (L/G) ratio Mist eliminator type
Packed-bed scrubber	Packing depth L/G ratio Caustic use (Y/N) pH Mist eliminator type
Carbon absorber	Bed depth Superficial gas velocity Bed temperature Desorption mechanism (media) Flue-gas moisture Cycle length Time-on-line after breakthrough

Emission Factors (lb/ton of feed)

A1	7	8	9
$PM_{filterable}$	2.574	~~1.861~~	2.223
PM_{total}	2.582	~~1.867~~	2.228
$PM_{condensible}$	8×10^{-3}	~~6×10^{-3}~~	5×10^{-3}
		VOID RUN 8 ON INLET	

A2			
$PM_{filterable}$	0.0055	0.0041	0.0031
PM_{total}	0.0096	0.0113	0.0057
$PM_{condensable}$	4.1×10^{-3}	7.2×10^{-3}	2.6×10^{-3}