PEDCo-ENVIRONMENTAL
SUITE 8 · ATKINSON SQUARE
CINCINNATI, OHIO 45246
513/771-4330

Note: This is a reference cited in *AP 42, Compilation of Air Pollutant Emission Factors, Volume I Stationary Point and Area Sources.* AP42 is located on the EPA web site at www.epa.gov/ttn/chief/ap42/

The file name refers to the reference number, the AP42 chapter and section. The file name "ref02_c01s02.pdf" would mean the reference is from AP42 chapter 1 section 2. The reference may be from a previous version of the section and no longer cited. The primary source should always be checked.

TEST NUMBER 73-ROC-1
INTERNATIONAL MINERALS AND CHEMICAL CORP. KINGSFORD, FLORIDA

FINAL

February, 1973

Prepared By

Norman Kulujian, P.E.
Richard W. Gerstle, P.E.

Contract No. 68-02-0237
Task No. 12

I. TABLE OF CONTENTS

	Subject	Page
II.	INTRODUCTION	1
III.	SUMMARY OF RESULTS	3
IV.	PROCESS DESCRIPTION	10
V.	PROCESS OPERATION	12
VI.	LOCATION OF SAMPLING POINTS	14
VII.	SAMPLING AND ANALYTICAL PROCEDURES	20
VIII.	APPENDIX	27

A. Complete Particulate Results with Example Calculations.

B. Complete Fluoride Results with Example Calculations.

C. Process Operational Log.

D. Field Data.

E. Standard Sampling Procedures.

F. Laboratory Report.

G. Sample Number Log.

H. Test Log.

I. Sampling Handling Log.

J. Project Participants and Titles.

K. Presurvey Report.

II. INTRODUCTION

Under the Clean Air Act of 1970, as amended, the Environmental Protection Agency is charged with the establishment of performance standards for stationary sources which may contribute significantly to air pollution. A performance standard is based on the best emission reduction systems which have been shown to be technically and economically feasible.

In order to set realistic performance standards, accurate data on pollutant emissions must be gathered from the stationary source category under consideration.

Atmospheric emissions of particulate and flucrides from the International Minerals and Chemical Corporation (IMC) phosphorus plant dryer in Kingsford, Florida were sampled to establish a guide for New Source Performance Standards as authorized by the Clean Air Act of 1970. Triplicate tests were made to determine particulate and fluoride concentrations at the inlet and outlet of the dryer scrubber. The six tests were made February 12-15, 1973.

Wet phosphate rock enters the IMC dryer where the particles are dried by hot furnace gases. Dust entrainment in the exit flue gases are scrubbed in a vertical spray chamber scrubber. Fluoride emissions in the phosphate rock are driven off to the exit gases by the heat in the dryer.

III. SUMMARY OF RESULTS

Table 3.1 presents the overall test summary of particulate and fluoride concentrations in U.S. and metric units. Three particulate and three fluoride tests were averaged to obtain values in Table 3.1. Individual test results are shown as follows in subsequent Tables:

Table	Description
3.2	Particulate Analysis Summary
3.3	Fluoride Analysis Summary
3.4	Scrubber Water Analysis Summary
3.5	Rock Material Analysis Summary

In all cases, except particulate Test 3, outlet flow rates were slightly higher than volumes sampled at the inlet. This may have been caused by a cyclonic flow distribution, but since the maximum difference is only three percent, other factors may have contributed to the variation.

Individual particulate test data (Table 3.2) do not vary appreciably for this type of process. Outlet loadings from Run 1 are approximately twice the values from the last two runs, but this could be due to the particle size distribution in the type of feed. Types of feed are discussed in Section V.

The inlet combustion gas analysis for the particulate runs indicates a rise in CO_2 and a decrease in O_2 for the three tests.

Table 3.1 OVERALL SUMMARY OF RESULTS FROM PHOSPHATE ROCK DRYER

Pollutant Measurement System	Units		PARTICULATE				FLUORIDE			
			U.S.		Metric		U.S.		Metric	
	U.S.	Metric	Inlet	Outlet	Inlet	Outlet	Inlet	Outlet	Inlet	Outlet
Volume of Gas Sampled	DSCF[b]	DNm^3[e]	51.608	108.212	1.4614	3.0642	65.795	106.414	1.8609	3.0133
Percent Moisture by Volume	%	%	31.63	27.19	31.63	27.19	31.89	26.00	31.89	26.00
Average Stack Temperature	°F	°C	164	151	73.3	66.1	164	151	73.3	66.1
Dry Stack Volumetric Flow Rate	DSCFM[c]	DNm^3/sec[f]	65597	65040	30.958	30.696	65011	66754	30.682	31.505
Actual Stack Volumetric Flow Rate	ACFM[d]	M^3/sec[g]	110262	101562	52.038	47.932	109554	102868	51.704	48.549
Percent Isokinetic	%	%	107.6	105.0	107.6	105.0	107.8	100.5	107.6	105.0
Feed Rate	Ton/hr	Mton/hr	333	333	302	302	295	295	268	268
Partial Catch[a]										
Weight	mg	mg	5621	302	5621	302	3.8	4.7	3.8	4.7
Concentration/Dry Volume	gr/DSCF	mg/DN_m^3	1.639	0.04275	3751	97.83	0.00089	0.00068	2.0	1.6
Concentration/Actual Volume	gr/ACF	$mg/_m^3$	0.9783	0.02741	2239	62.72	0.00053	0.00044	1.2	1.0
Concentration/Time	lb/hr	kg/hr	923.8	23.80	419.0	10.80	0.50	0.39	0.23	0.18
Lb/ton, Feed Concentration/ Input Feed Rate	lb/ton	kg/Mton	2.741	0.076	1.371	0.0380	0.0017	0.0014	0.00085	0.00070
Total Catch										
Weight	mg	mg	5746	411	5746	411	166.2	27	166.2	27
Concentration/Dry Volume	gr/DSCF	mg/DN_m^3	1.677	0.05832	3837	133.4	0.03902	0.0040	89.28	9.2
Concentration/Actual Volume	gr/ACF	mg/m^3	0.9922	0.03740	226.2	85.57	0.02319	0.0026	53.06	5.9
Concentration/Time	lb/hr	kg/hr	945.5	32.51	428.9	14.75	21.76	2.3	9.870	1.0
Lb/ton, Feed Concentration/ Input Feed Rate	lb/ton	kg/Mton	2.810	0.102	1.405	0.0510	0.0732	0.0076	0.0366	0.0038
Percent Impinger Catch	%	%	2.55	27.6	2.55	27.6				
Percent Insoluable Fluoride	%	%					97.7	63	97.7	63

a) For particulate, catch includes probe, cyclone and filter. For fluoride, catch includes the water soluble portion.

b) Dry standard cubic feet at 70°F, 29.92 in. Hg.

c) Dry standard cubic feet per minute at 70°F, 29.92 in. Hg.

d) Actual cubic feet per minute

e) Dry normal cubic meters at 21.1°C, 760 mm Hg.

f) Dry normal cubic meters per second at 21.1°C, 760 mm Hg.

g) Actual cubic meters per second

Table 3.2 PARTICULATE EMISSION DATA SUMMARY
IMC Corp., Kingsford, Florida - Rock Dryer Scrubber

	Inlet			Outlet		
	1	2	3	1	2	3
Date	2-12-73	2-13-73	2-13-73	2-12-73	2-13-73	2-13-73
Volume of Gas Sampled-DSCF[a]	43.182	56.089	55.553	111.796	106.232	106.817
Percent Moisture by Volume	31.06	32.43	31.41	26.94	27.15	27.48
Average Stack Temperature-°F	164	164	164	151	150	152
Stack Volumetric Flow Rate-DSCFM[b]	64,172	65,578	67,040	64,707	66,569	63,843
Stack Volumetric Flow Rate-ACFM[c]	106,284	110,850	113,652	100,604	103,573	100,508
Percent Isckinetic	107.5	109.3	105.9	108.9	100.6	105.5
Percent CO_2	2.93	3.20	5.00	5.00	4.03	5.47
Percent O_2	17.93	17.50	15.70	15.43	15.13	15.57
Percent CO	0.00	0.03	0.07	0.03	0.00	0.03
Feed Rate-ton/hr	270	350	380	270	350	380
Particulates-probe, cyclone, and filter catch						
mg	3170	7566	6128	438	229	239
gr/DSCF	1.133	2.082	1.702	0.06046	0.03326	0.03452
gr/ACF	0.6840	1.231	1.020	0.03892	0.02138	0.02193
lb/hr	623.2	1170	978.2	33.53	18.98	18.90
lb/ton feed	2.307	3.343	2.574	0.124	0.054	0.049
Particulates-total catch						
mg	3315	7698	6226	537	376	320
gr/DSCF	1.185	2.118	1.729	0.07412	0.05462	0.04623
gr/ACF	0.7153	1.253	1.036	0.04772	0.03511	0.02936
lb/hr	651.7	1191	993.8	41.11	31.12	25.30
lb/ton feed	2.413	3.401	2.615	0.152	0.089	0.066
Percent impinger catch	4.37	1.71	1.57	18.4	39.1	25.3

a) Dry standard cubic feet at 70°F, 29.92 in. Hg.
b) Dry standard cubic feet per minute at 70°F, 29.92 in. Hg.
c) Actual cubic feet per minute.

The Orsat apparatus did not have a water jacket around the gas tube which may have varied the gas temperature and, in turn, the gas analysis.

The insoluble portion of the outlet fluoride catch (Run 5, Table 3.3) is approximately an order of magnitude greater than values from the other two tests. Duplicate laboratory analysis produced the same results. A 60% pebble - 40% concentrate was being fed to the dryer during this test. The fluoride analysis of the feed (Table 3.5) confirms the rock was similar to other runs. Therefore it appears that the scrubber efficiency was lower during this run.

After each of the three fluoride runs, 100 ml of inlet and outlet sample was removed and given to IMC personnel for their analysis. This was considered when EPA analyzed the samples for fluoride concentration.

No major testing problems occurred during sampling at the Kingsford site. A pump in one of the outlet meter boxes acted up at times, so another meter box was used to complete the tests. A cyclone bypass connector on the outlet train broke after one test was complete, so the sample stayed intact. During the last fluoride test, the probe contacted the mud on the inside of the duct creating a vacuum in the sample train. The impinger water

Table 3.3 FLUORIDE EMISSION DATA SUMMARY
IMC Corp., Kingsford, Florida - Rock Dryer Scrubber

	Inlet			Outlet		
	4	5	6	4	5	6
Date	2-14-73	2-14-73	2-15-73	2-14-73	2-14-73	2-15-73
Volume of Gas Sampled-DSCF[a]	66.354	65.280	65.751	105.672	105.913	107.658
Percent Moisture by Volume	33.19	32.27	30.22	25.45	24.92	27.64
Average Stack Temperature-°F	164	164	164	151	150	151
Stack Volumetric Flow Rate-DSCFM[b]	64,884	65,641	64,528	66,251	67,700	66,312
Stack Volumetric Flow Rate-ACFM[c]	111,213	111,127	106,321	101,226	102,610	104,767
Percent Isokinetic	108.9	105.9	108.5	100.6	98.6	102.4
Feed Rate-ton/hr	270	300	315	270	300	315
Fluoride-water soluble						
mg	3.1	5.7	2.6	5.6	6.3	2.2
gr/DSCF	0.00072	0.00134	0.00061	0.00082	0.00091	0.00031
gr/ACF	0.00042	0.00079	0.00037	0.00053	0.00060	0.00019
lb/hr	0.400	0.758	0.337	0.464	0.532	0.179
lb/ton feed	0.0015	0.0025	0.0011	0.0017	0.0018	0.0006
Fluoride-total						
mg	137.2	189.6	171.9	7.9	67.4	6.9
gr/DSCF	0.03190	0.04482	0.04034	0.00115	0.00982	0.00098
gr/ACF	0.01861	0.02647	0.02448	0.00075	0.00648	0.00062
lb/hr	17.75	25.22	22.30	0.655	5.698	0.562
lb/ton feed	0.0654	0.0838	0.0705	0.0024	0.0187	0.0018
Percent insoluble fluoride	97.7	97.0	98.5	29.1	90.7	68.1

a) Dry standard cubic feet at 70°F, 29.92 in. Hg.
b) Dry standard cubic feet per minute at 70°F, 29.92 in. Hg.
c) Actual cubic feet per minute

Table 3.4. SCRUBBER WATER ANALYSIS SUMMARY

Item	Test Number							
	Scrubber Inlet				Scrubber Outlet			
	4	5	6	Avg.	4	5	6	Avg.
Total Fluorides, mg/l	0.4	0.4	0.4	0.4	1.3	1.2	1.1	1.2
P_2O_5, mg/l	0.1	0.1	0.1	0.1	1.4	1.2	1.4	1.3
pH	7.77	7.93	7.81	7.84	7.60	7.89	7.66	7.72

Table 3.5. ROCK MATERIAL ANALYSIS SUMMARY

Test	Total Fluoride, mg/gm		Total P_2O_5, %	
	Raw Feed	Dry Product	Raw Feed	Dry Product
1	38.9	36.2	31.1	31.8
2	37.8	39.9	30.5	32.4
3	38.5	39.2	33.0	33.1
4	38.6	38.5	31.8	30.9
5	36.9	37.1	31.5	30.7
6	38.5	39.4	32.4	33.8

Sample collection times can be found in Appendix H.

backed up and wet the filter. The sampling team replaced the filter without losing any of the sample water.

IV. PROCESS DESCRIPTION

A phosphate rock plant flow diagram, shown in Figure 4.1, illustrates the steps of the process in relation to the drying operation. After the phosphate rock is mined, a flotation process separates the impurities by chemically separating the impurities from the phosphate sand. The washed rock is then conveyed to storage bins.

The wet rock contains between 7 and 20 percent moisture while being transported to the drying site. All grades of rock are normally dried to 3 percent or less in the drying operation.

The IMC rock dryer at Kingsford, Florida is a 270 TPH fluid bed unit. The rock is dried by heat supplied by natural gas, with No. 5 residual fuel oil as a standby.

From the drier, combustion gases enter a cyclone separator where the majority of the particulate is removed and recycled back to the product conveyor belt. The gases then flow to a cyclonic scrubber using fresh water as the scrubbing media. The clean gas flow leaves the scrubber and exits through a ninety foot stack.

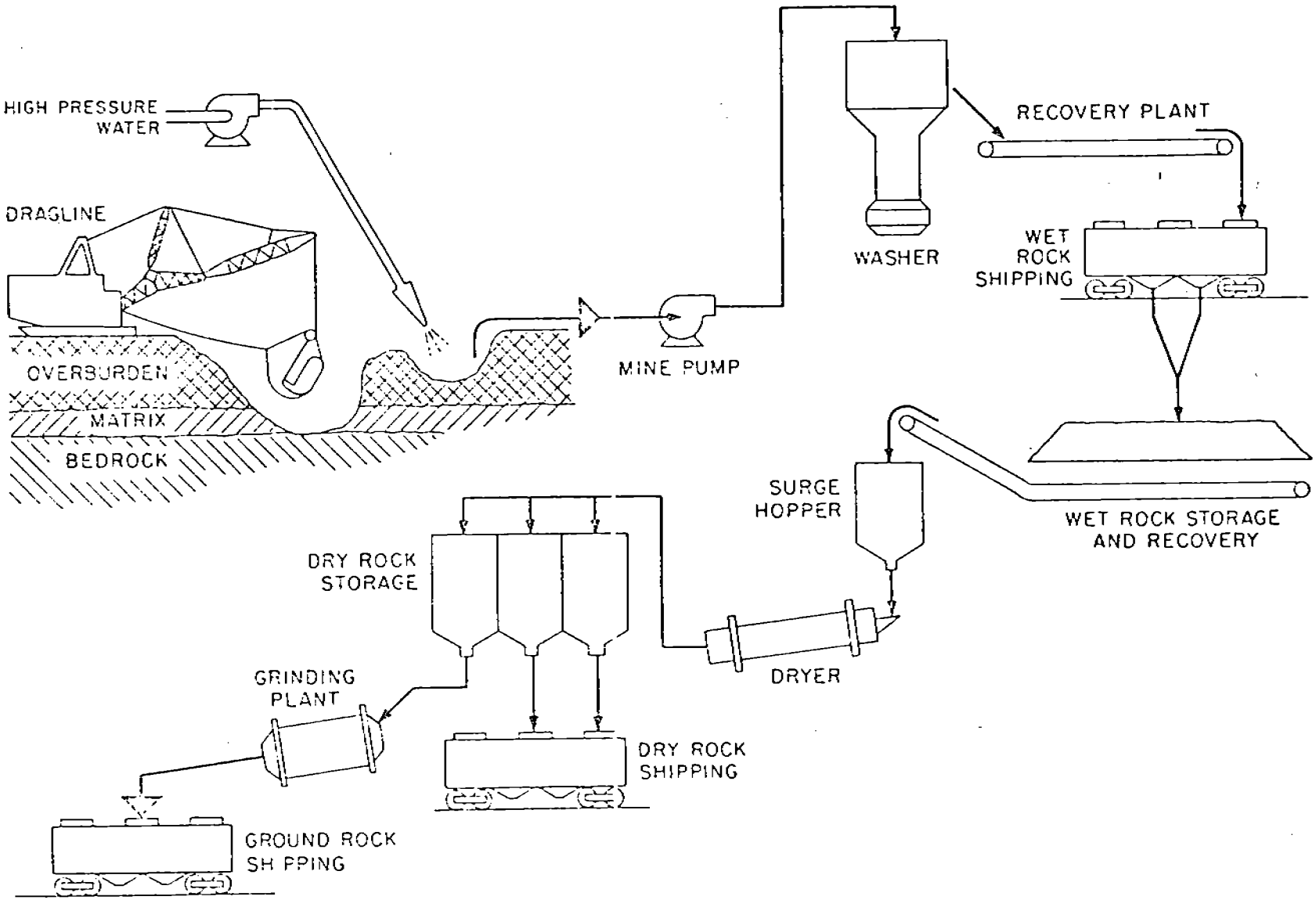

Figure 4.1. Phosphate rock flow sheet.

V. PROCESS OPERATION*

The operations at the Kingsford rock drying plant were monitored from the systems control room by Mr. J. Peoples of EPA. From this vantage point, Mr. Peoples was able to collect data and communicate any upsets or abnormalities during the testing periods to the test crew. Data recorded included recording times, feed and production rates, and other additional information related to the fluid bed dryer and scrubber cleaning operation (Appendix C tabulates this information along with related comments).

Particulate and fluoride tests were conducted at the rock drying plant during the week of February 12, 1973. On the first day, Feb. 12, 1973, no process or sampling problems were encountered while conducting Run 1. However, fuel oil to furnish heat for the dryer was substituted for natural gas due to the fuel shortage.

The raw materials fed to the dryer consisted of a mixture of 60% pebble - 40% concentrate. For the second particulate feed-in materials consisted of 70% pebble - 30% concentrate. One process shutdown occurred during the second run and delayed testing from 11:00 A.M. until 12:50 P.M. due to conveyor belt trouble. The dryer feed for the third run was 100% concentrate.

---

*Written and supplied by EPA.

On Wednesday, Feb. 14, at 9:10 A.M. the fluoride tests were begun at Kingsford. A mixture of 60% pebble - 40% concentrate was being processed during runs one (1) and two (2). Test three (3) was completed on Thursday with 100% concentrate being processed under normal conditions. No process upsets interfered with these tests.

The opacity of the Kingsford dryer effluent was difficult to estimate because of the high moisture content.

VI LOCATION OF SAMPLING POINTS

A. Inlet Location

The configuration of the ductwork downstream of the drier as shown in Figure 6.1 made it impossible to choose a section completely free of turbulent effects. The best possible sampling location was chosen at a point nine inches upstream from two vertical water sprays and approximately twelve feet downstream of an induced draft fan.

Since this chosen sampling location was less than 0.5 diameters from the water sprays, the maximum number of traverse points was chosen as required by the Federal Register, Vol. 36, No. 247. Figure 1.1, Dimensions of the duct are 79 inches high by 56.5 inches wide. Five ports were decided upon with ten traverse points per port for a total of fifty (50) points as illustrated in Figure 6.2. Each sampling area would then theoretically be 15.8 inches long by 5.65 inches wide, resulting in an aspect ratio of 2.66. Increasing the sampling ports would reduce the aspect ratio but the existing framework around the bypass stack made this impossible, since a minimum of 14 inches was needed from the existing framework to the sampling port.

Actual sampling areas in Figure 6.2 are somewhat smaller than theoretical areas due to a 6 to 7 inch layer of mud on the bottom of the duct. This reduction in area was considered in

Figure 6.1 Dryer Inlet Location

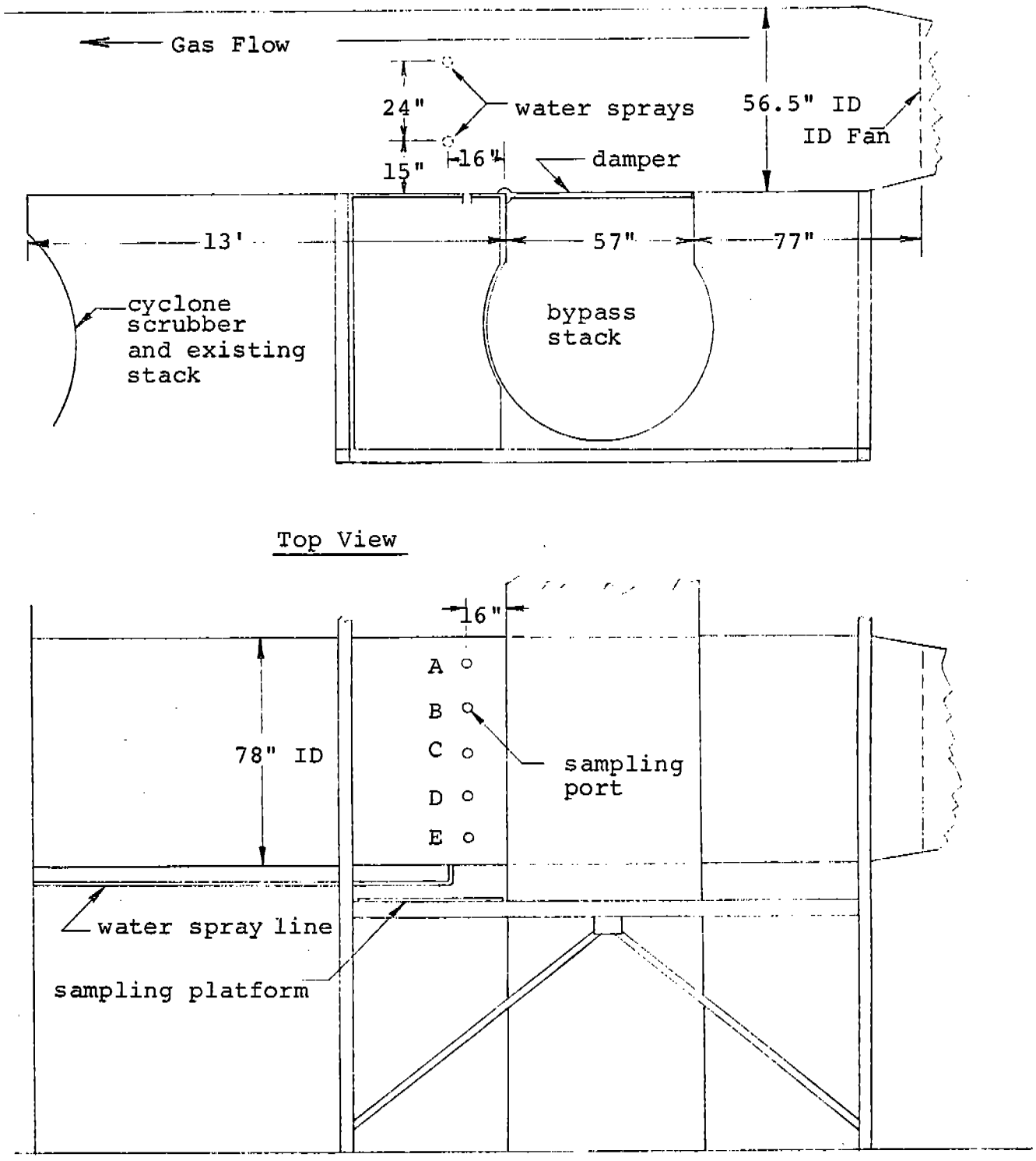

Figure 6.2 Inlet Traverse Points

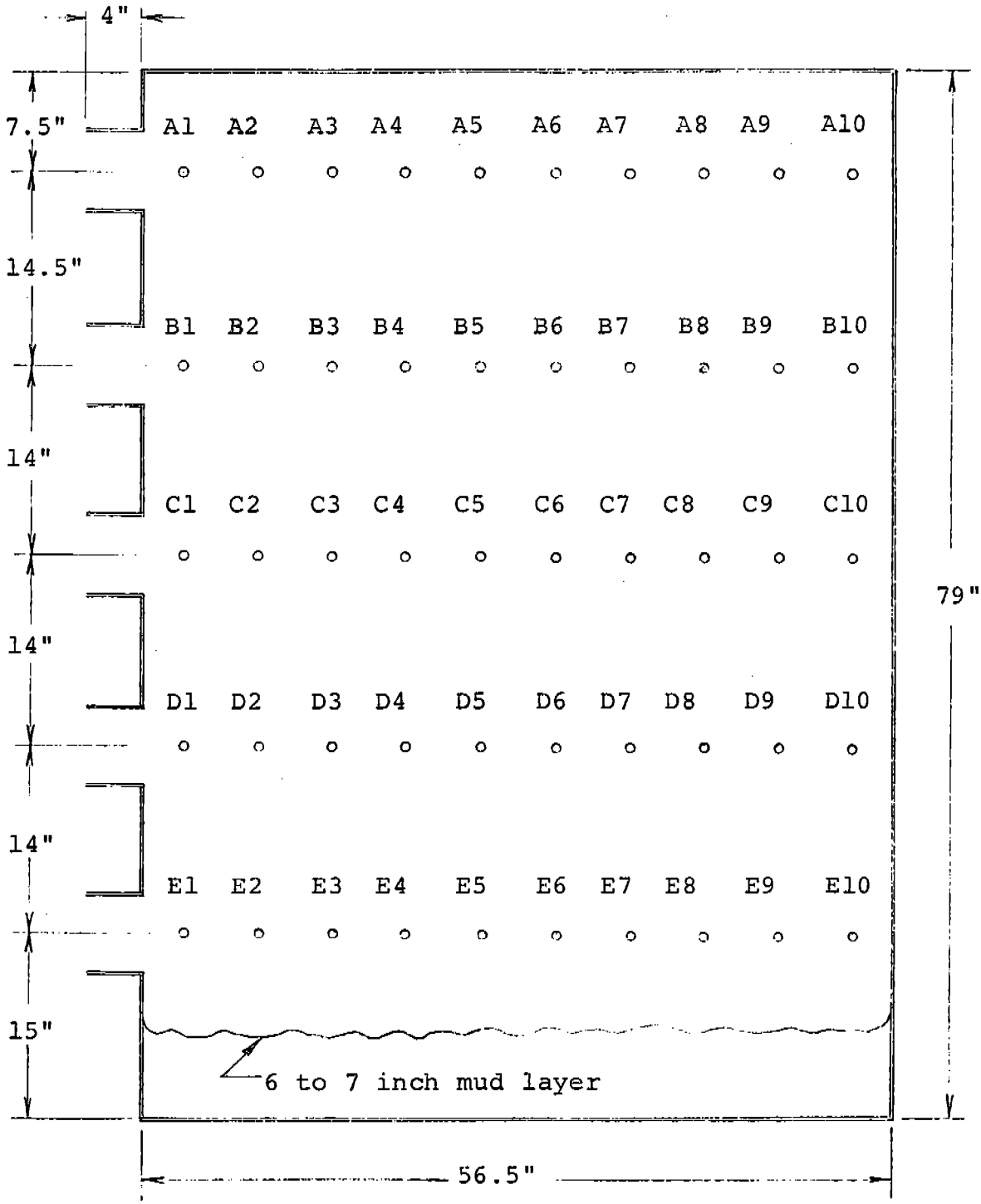

Looking Down Stream

determining air flow rates. A bypass stack without control equipment is less than one duct diameter upstream from the chosen sampling location and was blocked off by a damper which eliminated air stream turbulence.

B. Outlet Location

The rock drying operation is equipped with a stack approximately 90 feet high. Two existing ports were found to be satisfactory for emission testing. A diagram of the stack is shown in Figure 6.3 with sampling port and water spray locations. Two sampling locations, 90 degrees apart are needed for vertical stack sampling (Federal Register, Vol. 36, No. 247, Page 24882). When dimensions of the stack were taken, it was noticed the ports were only 80 to 85 degrees apart, which was assumed to be satisfactory.

The stack is 83 inches in diameter at the sampling location. Ports are located 6 ft. below the top of the stack, and 10 ft. above the closest obstruction. Forty-eight sampling points (24 along each diameter) were chosen to satisfy traverse point requirements as specified by the Federal Register. A cross section of the stack is shown in Figure 6.4 with the chosen sampling points.

A portion of the existing railing had to be removed to allow for the sample box traverse. A support platform was designed so the sample box could be overhung over the walk, since the needed sampling width was much greater than the catwalk width of 30 inches.

Figure 6.3 Dryer Outlet Location

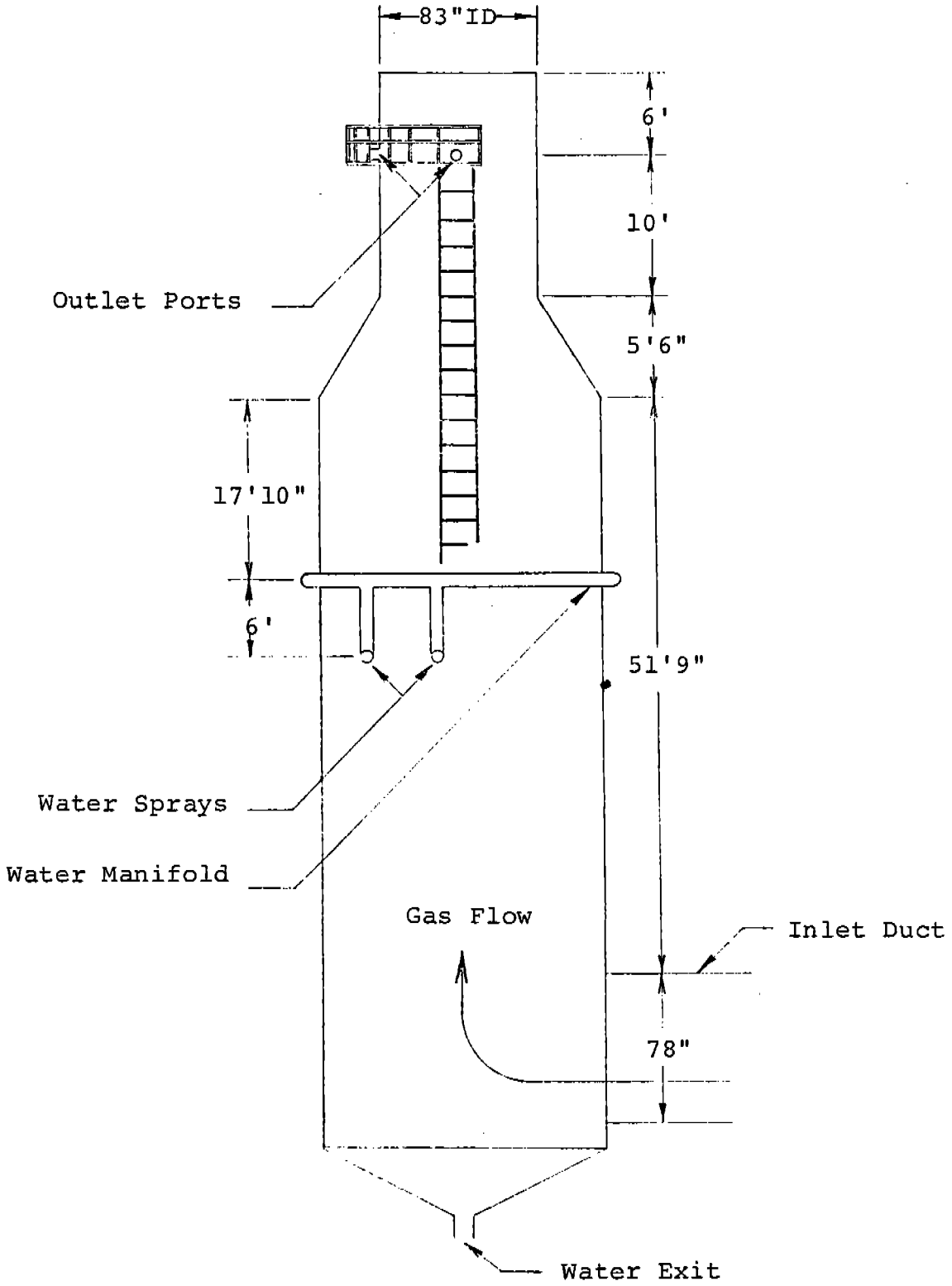

Elevation

Figure 6.4 Outlet Traverse Points

Traverse Point Locations are Tabulated in Appendix D

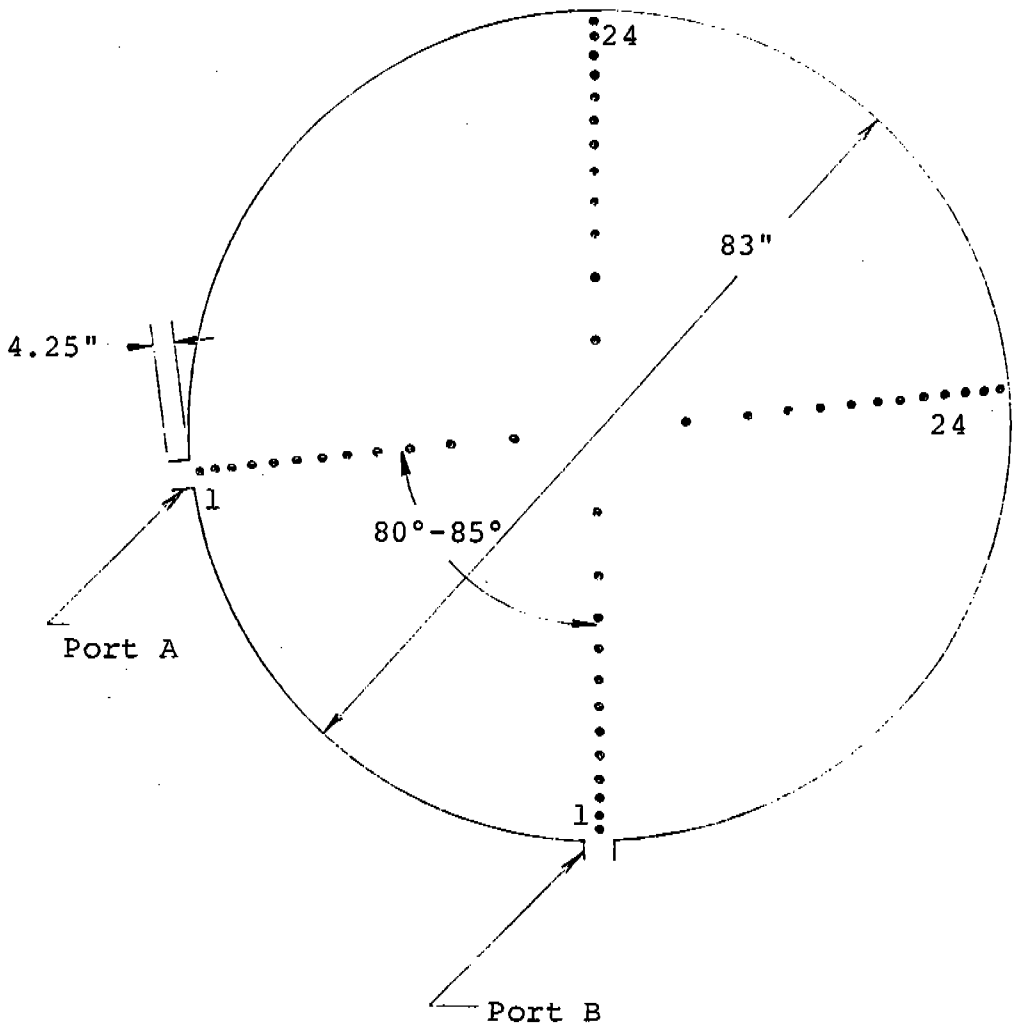

Looking Down

VII. SAMPLING PROCEDURES

All particulate and fluoride sampling procedures were selected and approved by EPA prior to field sampling. The contractor performed all testing and sample recovery operations; collected samples were analyzed by EPA personnel. The inlet and outlet sampling crew consisted of two man teams which included a meter and probe technician.

At the inlet site, there was a relatively high positive pressure combined with high humidity air at approximately 165°F. Water condensed in the first two impingers which had to be replaced midway through the test. After each inlet test the total water volume was determined and properly stored for analysis.

The outlet meter box was positioned approximately fifty feet below the sampling site. Since the diameter of the stack was much greater than the width of the catwalk, two different probe lengths reduced the sample box overhang.

Preliminary Traverse and Moisture

A preliminary velocity traverse at the inlet and outlet location determined approximate nozzle sizes and isokinetic sampling conditions. A 0.180 inch I.D. nozzle was used for subsequent inlet testing while the outlet was sampled with a 0.277 inch I.D. nozzle.

The inlet stack gas moisture was determined by a train similar to Figure 4.2, Federal Register, Vol. 36, No. 247, Page 24887. Tests on inlet flue gas indicated values were close to saturation; the outlet gas was assumed to be saturated.

Gas Velocity and Temperature

Velocities were measured at each sampling point across the stack diameter to determine an average value according to procedures described in the Federal Register. Flow rates were calculated from velocities at inlet and outlet stations from which flow continuity was checked. Gas flow temperatures were measured by long stem dial thermometers.

Molecular Weight and Gas Analysis

An integrated sample of the stack gases was collected at the inlet and outlet during each particulate run by pumping flue gas into a Mylar bag at the rate of approximately 0.5 liter per minute. This bag sample was then analyzed on-site with an Orsat apparatus for CO_2, O_2, and CO. Prior to the first test all chemical reagents were changed to assure accurate readings. The molecular weights of the particulate combustion gas ranged from 29.19 to 29.50. A molecular weight of 29.00 was assumed for all fluoride test calculations.

Particulate Sampling

Particulate matter was isokinetically sampled from the drying operation with a train shown in Figure 7.1 Although the Federal Register stipulates a minimum sampling time of 5 minutes for each sampling point, shorter times were used due to the number of traverse points selected.

The train consisted of a stainless steel nozzle, a heated glass probe (a 6 ft. probe was used at the inlet while testing at the outlet was done with 4 ft. and 8 ft. lengths), a heated glass fiber filter, and four impingers connected in series with glass ball joint fittings. The first two impingers contained 100 ml of water each, the third impinger was left empty and approximately 200 grams of preweighed silica gel were placed in the fourth impinger.

In all cases sampling was conducted under isokinetic conditions by continually monitoring the velocity with a pitot tube and adjusting the sampling rate accordingly.

At the inlet site, the first impinger initially containing 100 ml. of water had to be replaced midway during the tests due to the large volume of water which condensed in the impinger. The stack team was very careful so as not to contact the nozzle with the muddy ports and stack walls when changing ports.

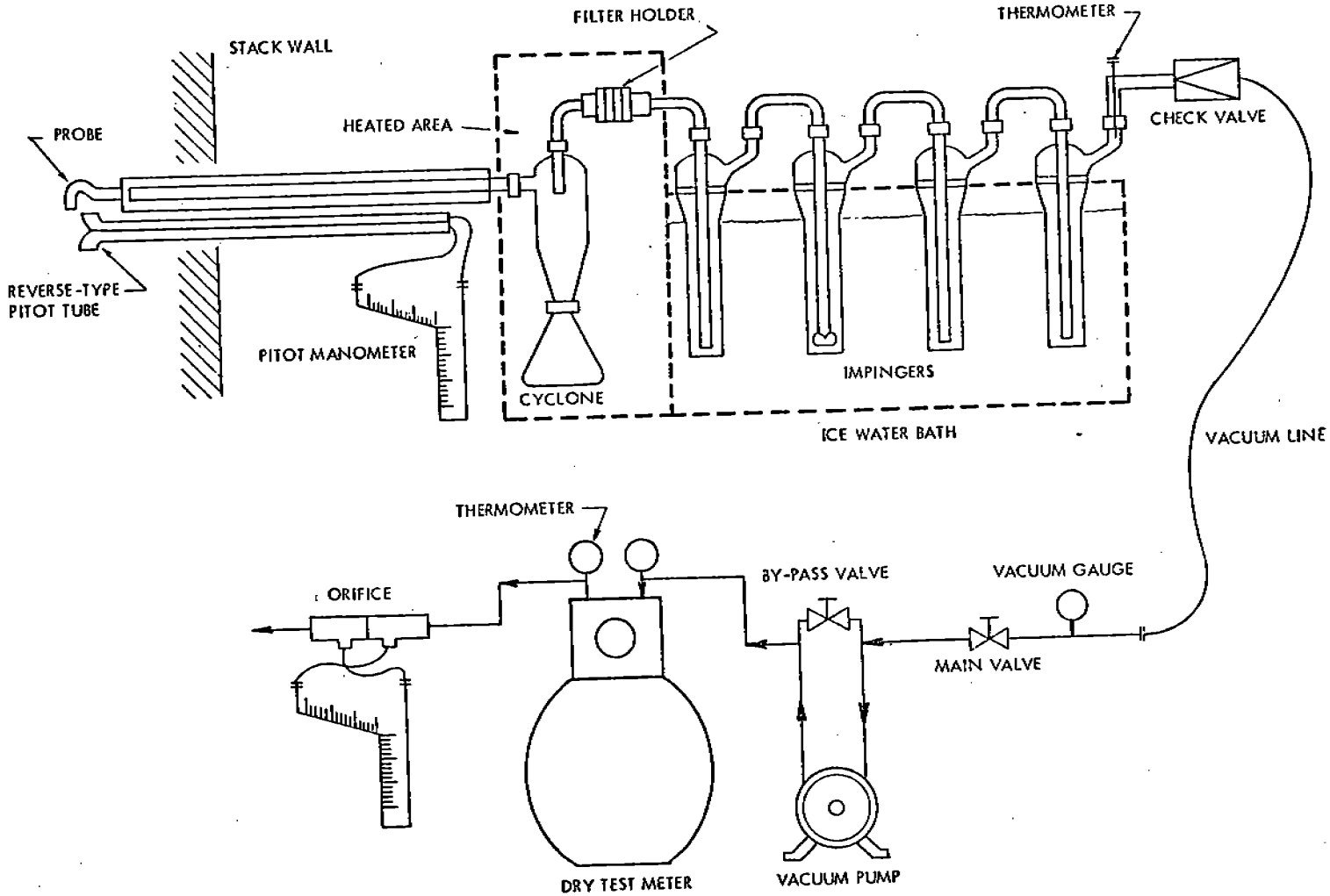

Figure 7.1. Particulate sampling train.

The train cleanup procedure consisted of measuring the water collected and weighing the silica gel to determine moisture content. The water was then poured into a glass jar. The filter was removed and placed in a marked container. The probe and front half of the filter holder were then rinsed with analytical reagent grade acetone and the washings placed in a glass container. The rear half of the train consisting of filter holder, impingers, and connectors was rinsed with distilled water and this water added to the impinger contents. The rear half of the train was then rinsed with acetone and placed in a third sample jar. A portion of the acetone and distilled water used in the sample recovery were set aside and used as blanks for analysis.

Fluoride Sampling

Particulate and gaseous fluorides were withdrawn isokinetically from the phosphate drying operation with the train shown in Figure 7.2.

The design and contents of the four impingers are identical to the particulate train. An unheated filter holder containing a Whatman No. 41 paper filter was placed between the third and fourth impingers to trap particulate fluorides. Contents of the first three impingers, water wash of probe, nozzle, and filter holder were placed in the same container. No acetone wash was required for the fluoride clean up.

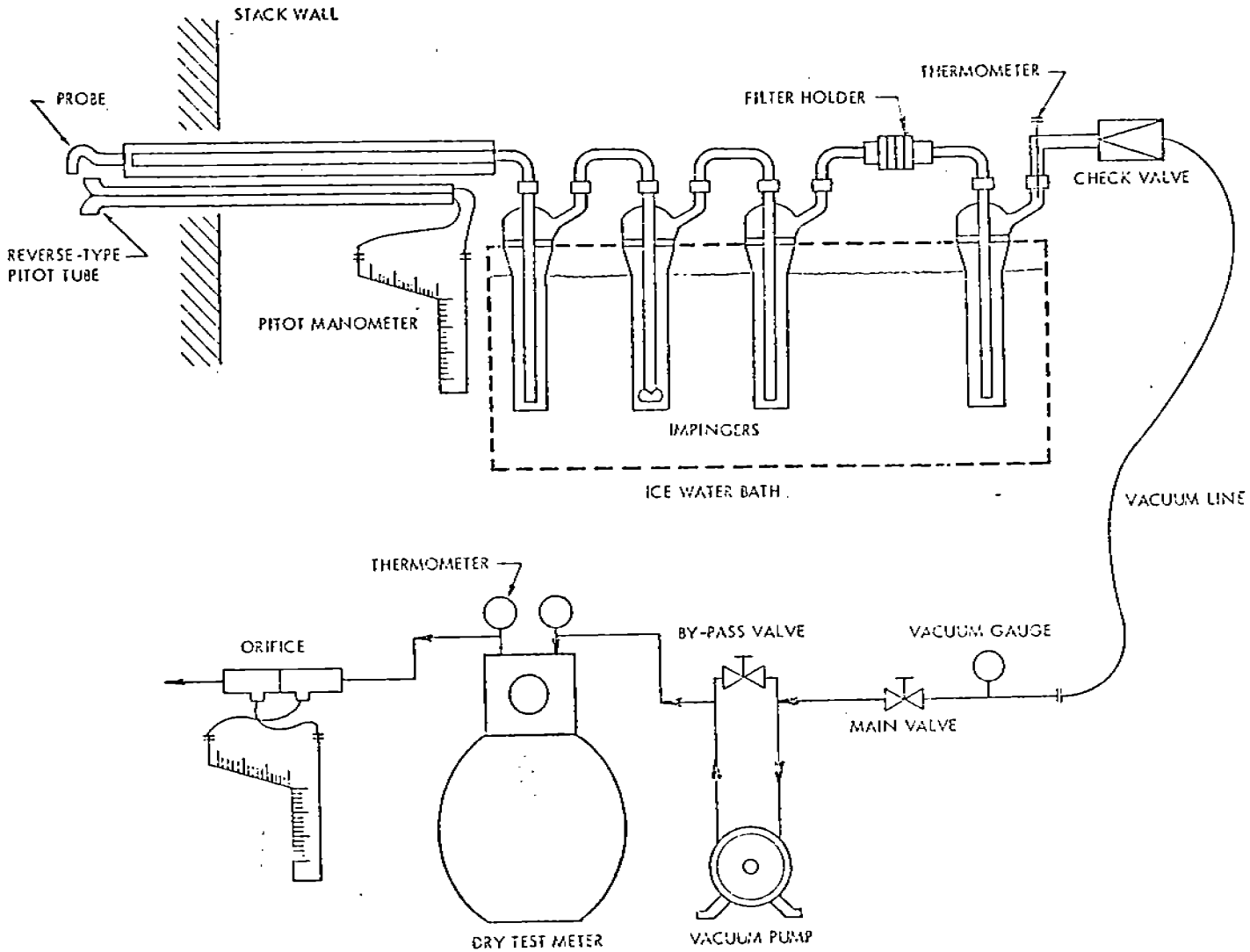

Figure 7.2 Fluoride Sampling Train

During the first fluoride test, the filter exhibited a darkish brown color. Since the Whatman filter was unheated, the exhaust gas constituents must have accounted for the color change. As explained earlier in Section 3, the original pump used at the outlet site sounded as if the vanes were sticking. On the first outlet fluoride test, the flow rate was difficult to maintain for isokinetic sampling (see Appendix D). At high velocities either the filter was starting to plug up or the pump connections could have been loose. In either case, another pump was used for subsequent outlet testing.

Scrubber water along with raw and finished product rock samples were taken during each test. Three scrubber water samples during each test were measured for pH and temperature and identified on the individual bottles.

Sample Storage

All samples were placed in 1000 ml glass and polyethylene containers and marked with EPA identification tags (see Appendix G). The bottles were then put in wooden boxes with styrofoam separators and hand delivered to EPA, North Carolina, after all tests were completed.

APPENDIX A
COMPLETE PARTICULATE RESULTS

EXAMPLE CALCULATION
USING DATA FROM RUN 1 OUTLET

1. Volume of dry gas sampled at standard conditions[a], DSCF

$$V_{m_{std}} = \frac{17.7 \times V_m \left[P_b + \frac{P_m}{13.6}\right]}{(T_m + 460)} = \frac{17.7 \times 114.926 \left[30.41 + \frac{1.76}{13.6}\right]}{(96.5 + 460)} = 111.63 \text{ DSCF}$$

2. Volume of water vapor at standard conditions[b], SCF

$$V_{w_{gas}} = 0.0474 \times V_w = 0.0474 \times 869.5 = 41.21 \text{ SCF}$$

3. Percent moisture in stack gas

$$\% M = \frac{100 \times V_{w_{gas}}}{V_{m_{std}} + V_{w_{gas}}} = \frac{100 \times 41.214}{111.796 + 41.214} = 26.94$$

4. Mole fraction of dry gas

$$M_d = \frac{100 - \% M}{100} = \frac{100 - 26.94}{100} = .7306$$

5. Molecular weight of dry stack gas

$$MW_d = (\%CO_2 \times \frac{44}{100}) + (\%O_2 \times \frac{32}{100}) + [(\%CO + \%N_2) \times \frac{28}{100}] = (5.00 \times \frac{44}{100}) + (15.43 \times \frac{32}{100}) + 79.57 \times \frac{28}{100}) = 29.42$$

6. Molecular weight of wet stack gas

$$MW = MW_d \times M_d + 18\ (1 - M_d) = 29.42 \times .7306 + 18\ (1 - .7306) = 26.343$$

7. Stack gas velocity at stack conditions, fpm[c]

$$V_s = 5128.8 \times Cp \times \sqrt{\Delta P_s \times (T_s + 460)\left(\frac{1}{[P_s \times MW]}\right)}^{1/2} = 5128.8 \times 0.83 \times 17.6 \left[\frac{1}{30.39 \times 26.343}\right]^{1/2} = 2646 \text{ fpm}$$

8. Stack gas volumetric flow rate at standard conditions[d], DSCFM

$$Q_s = \frac{0.123 \times V_s \times A_s \times M_d \times P_s}{(T_s + 460)} = \frac{0.123 \times 2646 \times 38.027 \times 144 \times .7306 \times 30.39}{(151 + 460)} = 64762 \text{ DSCFM}$$

9. Stack gas volumetric flow rate at stack conditions, ACFM

$$Q_a = \frac{.05645 \times Q_s \ (T_s + 460)}{P_s \times M_d} = \frac{.05645 \times 64762 \ (151 + 460)}{30.39 \times .7306} = 100604 \text{ ACFM}$$

10. Percent isokinetic

$$\%I = \frac{1{,}032 \times (T_s + 460) \times V_{m_{std}}}{V_s \times T_t \times P_s \times M_d \times (D_n)^2} = \frac{1{,}032 \times (151 + 460) \times 111.63}{2646 \times 144 \times 30.39 \times .7306 \times (.277)^2} = 108.43$$

11. Particulate - probe, cyclone, and filter, gr/DSCF

$$C_{an} = 0.0154 \times \frac{m_f}{V_{m_{std}}} = 0.0154 \times \frac{438}{111.63} = 0.0604 \text{ gr/DSCF}$$

12. Particulate - total, gr/DSCF

$$C_{ao} = 0.0154 \times \frac{m_t}{V_{m_{std}}} = 0.0154 \times \frac{537}{111.63} = 0.0741 \text{ gr/DSCF}$$

13. Particulate - probe, cyclone, and filter at stack conditions, gr/ACF

$$C_{at} = \frac{17.7 \times C_{an} \times P_s \times M_d}{(T_s + 460)} = \frac{17.7 \times 0.0604 \times 30.39 \times .7306}{(151 + 460)} = .0389 \text{ gr/ACF}$$

14. Particulate - total at stack conditions, gr/ACF

$$C_{aw} = \frac{17.7 \times C_{ao} \times P_s \times M_d}{(T_s + 460)} = \frac{17.7 \times .0741 \times 30.39 \times .7306}{(151 + 460)} = .0477 \text{ gr/ACF}$$

15. Particulate - probe, cyclone, and filter, lb/hr

$$C_{aw} = 0.00857 \times C_{an} \times Q_s = 0.00857 \times 0.0604 \times 64762 = 33.52 \text{ lb/hr}$$

16. Particulate - total, lb/hr

$$C_{ax} = 0.00857 \times C_{ao} \times Q_s = 0.00857 \times .0741 \times 64762 = 41.13 \text{ lb/hr}$$

17. Particulate - probe, cyclone, and filter, lb/ton feed

$$P_{tf} = \frac{C_{aw}}{T_c} = \frac{33.52}{270} = 0.124 \text{ lb/ton feed}$$

18. Particulate - total, lb/ton feed

$$P_{tt} = \frac{C_{ax}}{T_c} = \frac{41.13}{270} = 0.152 \text{ lb/ton feed}$$

---

a) Dry standard cubic feet at 70°F, 29.92 in. Hg.
b) Standard conditions at 70°F, 29.92 in. Hg.
c) $\sqrt{\Delta P_s \times (T_s + 460)}$ is determined by averaging the square root of the product of the velocity head (ΔP_s) and the absolute stack temperature from each sampling point.
d) Dry standard cubic feet per minute at 70°F, 29.92 in. Hg.

Table A-1 PARTICULATE RESULTS

Run No.		IN	1 OUT
Test Date, 1973		2-12	
Sampling Time, 24 hour clock		1441-1645	1435-1746
Sampling Location			
D_n	Sampling Nozzle Diameter, in.	0.180	0.277
T_t	Net Time of Test, Min.	100	144
P_b	Barometric Pressure, in. Hg Absolute	30.41	30.41
P_m	Average Orifice Pressure Drop, in. H_2O	0.61	1.76
V_m	Volume of Dry Gas Sampled at Meter Conditions, DCF	42.592	114.926
T_m	Average Gas Meter Temperature, °F	72.5	96.5
$V_{m_{std}}$	Volume of Dry Gas Sampled at Standard Conditions[a], DSCF	43.182	111.796
V_w	Total H_2O Collected in Impingers and Silica Gel, ml	410.5	869.5
$V_{w_{gas}}$	Volume of Water Vapor Collected at Standard Conditions[b], SCF	19.458	41.214
% M	% Moisture in Stack Gas, by Volume	31.06	26.94
M_d	Mole Fraction of Dry Gas	.6894	.7306
% CO_2	Volume % Dry	2.93	5.00
% O_2	Volume % Dry	17.93	15.43
% CO	Volume % Dry	0.00	0.03
% N_2	Volume % Dry	79.14	79.54
% EA	Percent Excess Air	-	-
MW_d	Molecular Weight of Stack Gas, Dry Basis	29.19	29.42

Run No.		IN	OUT
MW	Molecular Weight of Stack Gas, Wet Basis	25.71	26.34
C_p	Pitot Tube Coefficient	0.83	0.83
T_s	Average Stack Temperature, °F	164	151
N_p	Net Sampling Points	50	48
P_{st}	Static Pressure of Stack Gas, in. H_2O	+6.00	-0.21
P_s	Stack Gas Pressure, in. Hg Absolute	30.85	30.39
V_s	Stack Gas Velocity at Stack Conditions, fpm	3762	2646
A_s	Stack Area, ft^2	28.250	38.027
Q_s	Dry Stack Gas Volumetric Flow Rate at Standard Conditions,[c] DSCFM	64172	64707
Q_a	Stack Gas Volumetric Flow Rate at Stack Conditions, ACFM	106284	100604
% I	Percent Isokinetic	107.5	108.9
% O	Percent Opacity		
T_c	Production Rate - Tons/hr.	270	270
m_f	Particulate - Probe, Cyclone, and Filter, mg	3170	438
m_t	Particulate - Total, mg	3315	537
I_c	% Impinger Catch	4.37	18.4
C_{an}	Particulate - Probe, Cyclone, and Filter, gr/SCF	1.133	0.03892

Run No.		1 IN	OUT
C_{at}	Particulate - Probe, Cyclone, and Filter, gr/ACF	0.6840	0.03892
C_{au}	Particulate - Total, gr/ACF	0.7153	0.04772
C_{aw}	Particulate - Probe, Cyclone, and Filter, lb/hr.	623.2	33.53
P_{tf}	Particulate - Probe, Cyclone and Filter, lb/ton	2.307	0.124
P_{tt}	Particulate - Total, lb/ton	2.413	0.152

[a] Dry standard cubic feet at 70°F, 29.92 in. Hg.

[b] Standard conditions at 70°F, 29.92 in. Hg.

[c] Dry standard cubic feet per minute at 70°F, 29.92 in. Hg.

Table A-2 PARTICULATE RESULTS

Run No.		IN	2 OUT
Test Date, 1973		2-13	
Sampling Time, 24 hour clock		0916-1335	0915-1411
Sampling Location			
D_n	Sampling Nozzle Diameter, in.	0.180	0.277
T_t	Net Time of Test, Min.	125	144
P_b	Barometric Pressure, in. Hg Absolute	30.40	30.40
P_m	Average Orifice Pressure Drop, in. H_2O	0.62	1.65
V_m	Volume of Dry Gas Sampled at Meter Conditions, DCF	55.860	107.502
T_m	Average Gas Meter Temperature, °F	77.5	87.0
$V_{m_{std}}$	Volume of Dry Gas Sampled at Standard Conditions[a], DSCF	56.089	106.232
V_w	Total H_2O Collected in Impingers and Silica Gel, ml	568.0	835.2
$V_{w_{gas}}$	Volume of Water Vapor Collected at Standard Conditions[b], SCF	26.923	39.588
% M	% Moisture in Stack Gas, by Volume	32.43	27.15
M_d	Mole Fraction of Dry Gas	.6757	.7285
% CO_2	Volume % Dry	3.20	4.03
% O_2	Volume % Dry	17.50	15.13
% CO	Volume % Dry	0.03	0.00
% N_2	Volume % Dry	79.27	80.834
% EA	Percent Excess Air	___	___
MW_d	Molecular Weight of Stack Gas, Dry Basis	29.21	29.25

Run No.			
MW	Molecular Weight of Stack Gas, Wet Basis	25.58	26.20
C_p	Pitot Tube Coefficient	0.83	0.83
T_s	Average Stack Temperature, °F	164	150
N_p	Net Sampling Points	50	48
P_{st}	Static Pressure of Stack Gas, in. H_2O	+6.00	-0.21
P_s	Stack Gas Pressure, in. Hg Absolute	30.84	30.38
V_s	Stack Gas Velocity at Stack Conditions, fpm	3924	2724
A_s	Stack Area, ft^2	28.250	38.027
Q_s	Dry Stack Gas Volumetric Flow Rate at Standard Conditions, DSCFM	65578	66569
Q_a	Stack Gas Volumetric Flow Rate at Stack Conditions, ACFM	110850	103573
% I	Percent Isokinetic	109.3	100.6
% O	Percent Opacity		
T_c	Production Rate - Tons/hr.	350	350
m_f	Particulate - Probe, Cyclone, and Filter, mg	7566	229
m_t	Particulate - Total, mg	7698	376
I_c	% Impinger Catch	1.71	39.1
C_{an}	Particulate - Probe, Cyclone, and Filter, gr/SCF	2.082	.02138

Run No.			
C_{at}	Particulate - Probe, Cyclone, and Filter, gr/ACF	1.231	0.02138
C_{au}	Particulate - Total, gr/ACF	1.253	0.03511
C_{aw}	Particulate - Probe, Cyclone, and Filter, lb/hr.	1170	18.98
P_{tf}	Particulate - Probe, Cyclone and Filter, lb/ton	3.343	0.054
P_{tt}	Particulate - Total, lb/ton	3.401	0.089

[a] Dry standard cubic feet at 70°F, 29.92 in. Hg.

[b] Standard conditions at 70°F, 29.92 in. Hg.

[c] Dry standard cubic feet per minute at 70°F, 29.92 in. Hg.

TABLE A-3 PARTICULATE RESULTS

Run No.		IN 3	OUT
Test Date, 1973		2-13	
Sampling Time, 24 hour clock		1443- 1710	1440 - 1801
Sampling Location			
D_n	Sampling Nozzle Diameter, in.	0.180	0.277
T_t	Net Time of Test, Min.	125	144
P_b	Barometric Pressure, in. Hg Absolute	30.32	30.28
P_m	Average Orifice Pressure Drop, in. H_2O	0.64	1.65
V_m	Volume of Dry Gas Sampled at Meter Conditions, DCF	55.676	108.916
T_m	Average Gas Meter Temperature, °F	79.5	89.5
$V_{m_{std}}$	Volume of Dry Gas Sampled at Standard Conditions[a], DSCF	55.553	106.817
V_w	Total H_2O Collected in Impingers and Silica Gel, ml	536.8	854.1
$V_{w_{gas}}$	Volume of Water Vapor Collected at Standard Conditions[b], SCF	25.444	40.484
% M	% Moisture in Stack Gas, by Volume	31.41	27.48
M_d	Mole Fraction of Dry Gas	.6859	.7252
% CO_2	Volume % Dry	5.00	5.47
% O_2	Volume % Dry	15.70	15.57
% CO	Volume % Dry	0.07	0.03
% N_2	Volume % Dry	79.23	78.93
% EA	Percent Excess Air	____	____
MW_d	Molecular Weight of Stack Gas, Dry Basis	29.43	29.50

Run No.			
MW	Molecular Weight of Stack Gas, Wet Basis	25.84	26.34
C_p	Pitot Tube Coefficient	0.83	0.83
T_s	Average Stack Temperature, °F	164	152
N_p	Net Sampling Points	50	48
P_{st}	Static Pressure of Stack Gas, in. H_2O	+6.00	-0.21
P_s	Stack Gas Pressure, in. Hg Absolute	30.76	30.26
V_s	Stack Gas Velocity at Stack Conditions, fpm	3966	2646
A_s	Stack Area, ft^2	28.250	38.027
Q_s	Dry Stack Gas Volumetric Flow Rate at Standard Conditions,[c] DSCFM	67040	63843
Q_a	Stack Gas Volumetric Flow Rate at Stack Conditions, ACFM	113652	100508
% I	Percent Isokinetic	105.9	105.5
% O	Percent Opacity		
T_c	Production Rate - Tons/hr.	380	380
m_f	Particulate - Probe, Cyclone, and Filter, mg	6128	239
m_t	Particulate - Total, mg	6226	320
I_c	% Impinger Catch	1.57	25.3
C_{an}	Particulate - Probe, Cyclone, and Filter, gr/SCF	1.702	0.02193

Run No.			
C_{at}	Particulate - Probe, Cyclone, and Filter, gr/ACF	1.020	0.02193
C_{au}	Particulate - Total, gr/ACF	1.036	0.02936
C_{aw}	Particulate - Probe, Cyclone, and Filter, lb/hr.	978.2	18.90
P_{tf}	Particulate - Probe, Cyclone and Filter, lb/ton	2.574	0.049
P_{tt}	Particulate - Total, lb/ton	2.615	0.066

[a] Dry standard cubic feet at 70°F, 29.92 in. Hg.

[b] Standard conditions at 70°F, 29.92 in. Hg.

[c] Dry standard cubic feet per minute at 70°F, 29.92 in. Hg.

APPENDIX B

COMPLETE FLUORIDE RESULTS

TABLE-4 FLUORIDE TEST RESULTS

Run No.		IN	OUT
Test Date, 1973		2-14	2-14
Sampling Time, 24 hour clock		0912-1210	0910-1216
Sampling Location			
D_n	Sampling Nozzle Diameter, in.	0.180	0.277
T_t	Net Time of Test, Min.	150	144
P_b	Barometric Pressure, in. Hg Absolute	30.32	30;30
P_m	Average Orifice Pressure Drop, in. H_2O	0.64	1.50
V_m	Volume of Dry Gas Sampled at Meter Conditions, DCF	66.501	106.735
T_m	Average Gas Meter Temperature, °F	79.5	84.5
$V_{m_{std}}$	Volume of Dry Gas Sampled at Standard Conditions[a], DSCF	66.354	105.672
V_w	Total H_2O Collected in Impingers and Silica Gel, ml	695.5	761.0
$V_{w_{gas}}$	Volume of Water Vapor Collected at Standard Conditions[b], SCF	32.967	36.071
% M	% Moisture in Stack Gas, by Volume	33.19	25.45
M_d	Mole Fraction of Dry Gas	.6681	.7455
% CO_2	Volume % Dry	——	——
% O_2	Volume % Dry	——	——
% CO	Volume % Dry	——	——
% N_2	Volume % Dry	——	——
% EA	Percent Excess Air	——	——
MW_d	Molecular Weight of Stack Gas, Dry Basis	29.00	29.00

Run No.			
MW	Molecular Weight of Stack Gas, Wet Basis	25.35	26.20
C_p	Pitot Tube Coefficient	0.83	0.83
T_s	Average Stack Temperature, °F	164	151
N_p	Net Sampling Points	50	48
P_{st}	Static Pressure of Stack Gas, in. H_2O	+6.00	-0.21
P_s	Stack Gas Pressure, in. Hg Absolute	30.76	30.28
V_s	Stack Gas Velocity at Stack Conditions, fpm	3936	2664
A_s	Stack Area, $ft.^2$	28.250	38.027
O_s	Dry Stack Gas Volumetric Flow Rate at Standard Conditions,[c] DSCFM	64884	66251
Q_a	Stack Gas Volumetric Flow Rate at Stack Conditions, ACFM	111213	101226
% I	Percent Isokinetic	108.9	100.6

T_c	Production Rate-Tons/hr	270	270
m_f	Water Soluble Fluoride, mg	3.1	5.6
m_t	Total Fluoride, mg	137.2	7.9
%	Insoluble Fluoride	97.7	29.1
C_{an}	Water Soluble Fluoride, gr/SCF	0.00072	0.00082
C_{ao}	Total Fluoride, gr/SCF	0.03190	0.00115
C_{at}	Water Soluble Fluoride, gr/ACF	0.00042	0.00053
C_{au}	Total Fluoride, gr/ACF	0.01861	0.00075
C_{aw}	Water Soluble Fluoride, lb/hr	0.400	0.464
C_{ax}	Total Fluoride, lb/hr	17.75	0.655
P_{tf}	Water Soluble Fluoride, lb/ton	0.0015	0.0017
P_{tt}	Total Fluoride, lb/ton	0.0654	0.0024

---

[a] Dry standard cubic feet at 70°F, 29.92 in. Hg.

[b] Standard Conditions at 70°F, 29.92 in. Hg.

[c] Dry standard cubic feet per minute at 70°F, 29.92 in. Hg.

TABLE A-5 FLUORIDE TEST RESULTS

Run No.		IN	OUT
Test Date, 1973		2-14	2-14
Sampling Time, 24 hour clock		1343-1633	1330-1650
Sampling Location			
D_n	Sampling Nozzle Diameter, in.	0.180	0.277
T_t	Net Time of Test, Min.	150	144
P_b	Barometric Pressure, in. Hg Absolute	30.28	30.28
P_m	Average Orifice Pressure Drop, in. H_2O	0.64	1.57
V_m	Volume of Dry Gas Sampled at Meter Conditions, DCF	65.997	108.410
T_m	Average Gas Meter Temperature, °F	83.5	91.0
$V_{m_{std}}$	Volume of Dry Gas Sampled at Standard Conditions[a], DSCF	65.280	105.913
V_w	Total H_2O Collected in Impingers and Silica Gel, ml	656.2	741.7
$V_{w_{gas}}$	Volume of Water Vapor Collected at Standard Conditions[b], SCF	31.104	35.157
% M	% Moisture in Stack Gas, by Volume	32.27	24.92
M_d	Mole Fraction of Dry Gas	.6773	.7508
% CO_2	Volume % Dry	—	—
% O_2	Volume % Dry	—	—
% CO	Volume % Dry	—	—
% N_2	Volume % Dry	—	—
% EA	Percent Excess Air	—	—
MW_d	Molecular Weight of Stack Gas, Dry Basis	29.00	29.00

Run No.			
MW	Molecular Weight of Stack Gas, Wet Basis	25.45	26.26
C_p	Pitot Tube Coefficient	0.83	0.83
T_s	Average Stack Temperature, °F	164	150
N_p	Net Sampling Points	50	48
P_{st}	Static Pressure of Stack Gas, in. H_2O	+6.00	-0.21
P_s	Stack Gas Pressure, in. Hg Absolute	30.72	30.26
V_s	Stack Gas Velocity at Stack Conditions, fpm	3936	2700
A_s	Stack Area, ft^2	28.250	38.027
Q_s	Dry Stack Gas Volumetric Flow Rate at Standard Conditions,[c] DSCFM	65641	67700
Q_a	Stack Gas Volumetric Flow Rate at Stack Conditions, ACFM	111127	102610
% I	Percent Isokinetic	105.9	98.6

T_c	Production Rate-Tons/hr	300	300
m_f	Water Soluble Fluoride, mg	5.7	6.3
m_t	Total Fluoride, mg	189.6	67.4
%	Insoluble Fluoride	97.0	90.7
C_{an}	Water Soluble Fluoride, gr/SCF	0.00134	0.00091
C_{ao}	Total Fluoride, gr/SCF	0.04482	0.00982
C_{at}	Water Soluble Fluoride, gr/ACF	0.00079	0.00060
C_{au}	Total Fluoride, gr/ACF	0.02647	0.00648
C_{aw}	Water Soluble Fluoride, lb/hr	0.758	0.532
C_{ax}	Total Fluoride, lb/hr	25.22	5.698
P_{tf}	Water Soluble Fluoride, lb/ton	0.0025	0.0018
P_{tt}	Total Fluoride, lb/ton	0.0838	0.0187

---

[a] Dry standard cubic feet at 70°F, 29.92 in. Hg.

[b] Standard Conditions at 70°F, 29.92 in. Hg.

[c] Dry standard cubic feet per minute at 70°F, 29.92 in. Hg.

TABLE A-6 FLUORIDE TEST RESULTS

Run No.		IN	OUT
Test Date, 1973		2-15	2-15
Sampling Time, 24 hour clock		0905-1225	0850-1147
Sampling Location			
D_n	Sampling Nozzle Diameter, in.	0.180	0.277
T_t	Net Time of Test, Min.	150	144
P_b	Barometric Pressure, in. Hg Absolute	30.19	30.19
P_m	Average Orifice Pressure Drop, in. H_2O	0.62	1.56
V_m	Volume of Dry Gas Sampled at Meter Conditions, DCF	65.937	109.121
T_m	Average Gas Meter Temperature, °F	77.0	84.5
$V_{m_{std}}$	Volume of Dry Gas Sampled at Standard Conditions[a], DSCF	65.751	107.658
V_w	Total H_2O Collected in Impingers and Silica Gel, ml	600.8	867.7
$V_{w_{gas}}$	Volume of Water Vapor Collected at Standard Conditions[b], SCF	28.478	41.129
% M	% Moisture in Stack Gas, by Volume	30.22	27.64
M_d	Mole Fraction of Dry Gas	.6978	.7236
% CO_2	Volume % Dry	———	———
% O_2	Volume % Dry	———	———
% CO	Volume % Dry	———	———
% N_2	Volume % Dry	———	———
% EA	Percent Excess Air	———	———
MW_d	Molecular Weight of Stack Gas, Dry Basis	29.00	29.00

Run No.			
MW	Molecular Weight of Stack Gas, Wet Basis	25.68	25.96
C_p	Pitot Tube Coefficient	0.83	0.83
T_s	Average Stack Temperature, °F	164	151
N_p	Net Sampling Points	50	48
P_{st}	Static Pressure of Stack Gas, in. H_2O	+6.00	-0.21
P_s	Stack Gas Pressure, in. Hg Absolute	30.63	30.17
V_s	Stack Gas Velocity at Stack Conditions, fpm	3763	2754
A_s	Stack Area, ft^2	28.250	38.027
Q_s	Dry Stack Gas Volumetric Flow Rate at Standard Conditions, DSCFM	64508	66312
Q_a	Stack Gas Volumetric Flow Rate at Stack Conditions, ACFM	106312	104767
% I	Percent Isokinetic	108.5	102.4

T_c	Production Rate-Tons/hr	315	315
m_f	Water Soluble Fluoride, mg	2.6	2.2
m_t	Total Fluoride, mg	171.9	6.9
%	Insoluble Fluoride	98.5	68.1
C_{an}	Water Soluble Fluoride, gr/SCF	0.00061	0.00031
C_{ao}	Total Fluoride, gr/SCF	0.04034	0.00098
C_{at}	Water Soluble Fluoride, gr/ACF	0.00037	0.00019
C_{au}	Total Fluoride, gr/ACF	0.02448	0.00062
C_{aw}	Water Soluble Fluoride, lb/hr	0.337	0.179
C_{ax}	Total Fluoride, lb/hr	22.30	0.562
P_{tf}	Water Soluble Fluoride, lb/ton	0.0011	0.0006
P_{tt}	Total Fluoride, lb/ton	0.0705	0.0018

---

[a] Dry standard cubic feet at 70°F, 29.92 in. Hg.

[b] Standard Conditions at 70°F, 29.92 in. Hg.

[c] Dry standard cubic feet per minute at 70°F, 29.92 in. Hg.

Appendix C.[a]

This Appendix presents explanations of the process operations during testing. A detailed log of control room readings is also included along with related comments.

---

a) This entire Appendix was supplied by EPA.

1

IMC BARTOW FLA.

MONDAY FEB. 12, 1973 RUN 1 Particulate

Time	2:38pm	3:15	3:56	4:20	4:45	5:15 pm
Feed rate (TPH)	270	270	270	255	250	270
Temp Windbox °F	1820°F	1820°F	1820°F	1820°F	1825	1820
Temp Dryer outlet	170°F	170°F	175°	170	180	170
Cyclone Pressure outlet "H_2O	4.3	4.3	4.2	4.2	4.2	4.3
Scrubber Inlet Pressure	6.3	6.3	5.3	6.3	6.0	6.0
Totalizer (Tons)	44854.1	45017.5	45213.5	45317.8	45426.4	45566.3

General 1. Visible emissions are difficult to obtain because of the steam in the plume. See pictures 1 & 2.

General 2. Heat source is [illegible] 5 fuel oil. [illegible] when possible but none was used during [illegible] test.

Run 1 3. Feed & products samples were taken at 3, 4 and 5 o'clock p.m.

4. Run 1 started at 2:38 and ended at 5:45 pm [illegible] See data sheets for actual time of [illegible].

General If the probe was out of the stack this will be indicated. Inlet started at 2:41 and ended at 4:45

5. This operation is computer controlled therefore there are few variations. Visual observations [illegible] suggest the flow may be cyclonic [illegible]

Run 1.

six feet below the stack exit.

The dryer outlet temperature is actually the temperature of cyclone outlet which is the first place the temperature is [illegible] after the dryer. The cyclones are well insulated and this is effectively the dryer outlet temperature.

During run 1 a 90% concentrate the rest being pebble was the material being processed.

cont. Run 1

Time	5:46 pm
Feedrate	260
temp windbox	1815°F
temp dryer outlet	170°F
cyclone press. drop.	4.3
scrubber inlet press.	6
[illegible] (tons)	45697.7

(3)

IMC Feb. 13, 1973.
Run 2 Particulate Dryer

Time	9:15am	10:00	10:30	11:00	1:05	1:35pm	2:11
Feedrate	390	375	375	350	280	300	325
T. windbox	1820	1820	1820	1820	1820	1820	1815
T. dryer outlet	170°F	170	170	170	180	150	180
Cyclone P outlet "H2O	5.0	5.0	5.0	5.0	4.3	4.3	5.0
scrubber inlet P	6.3	6.3	6.3	6.3	6.2	6.2	6.0
Tons (total dryer)	50876.7	51170.6	51336.8	51513.5	51716.3	51[illegible]5	52055.6

outlet started at 9:15am
outlet stopped 1:35am
inlet start 9:16am
inlet stop 10:20am

see data sheets

Material being processed 70% pebble [illegible] concentrate.
Product & feed sample taken at 9, 10, 11 clock am.

The operation shut down at 11:00am due to conveyor belt trouble. Probes were plugged and the sampling will continue when plant restarts. Testing restart at 12:50pm

(ii) IMC Run 3 Particulate:
Feb. 13, 1973

Time	2:42pm	3:00	3:45	4:55	5:20	6:00
feedrate	280	325	380	390	390	390
T. windbox	1810°	1810°	1820°	1820°	1815	1815°
T. dryer outlet	180°	180	175°	175°	175	175
cyclone P outlet	4.4	4.4	4.4	5.0	5.0	5.0
scrubber inlet	6.0	6.0	6.2	6.0	6.0	5.0
Holding t, (tons)	52219.5	52302.5	52560.3	53057.4	53165.7	426.8

Outlet start 2:14
Outlet end 6:01
inlet start 2:45
inlet stop 5:10
] see data sheet

product & feed sample taken

100% concentrate was being processed during this run. According to plant people the emissions should decrease and the loading at the inlet should decrease. They were a little concerned that we might write a standard based on data used when only concentrate was being processed. They would like a standard to consider the product being processed.

(5) IMC RUN 1 Fluoride (4)
WED. Feb. 19, 1973

Time	9:12am	9:24	10.00	10:25	11:00	11:44	12:10pm	12:20
Feedrate TPH	260	270	260	270	250	325	270	260
T windbox °F	1825	1830°F	1830°F	1830°F	1830°F	1830°F	1830°	1830°
T dryer outlet	175°F	175°F	175°F	175°F	175°F	175°F	175°F	175°F
cyclone outlet	5.0	5.0	5.0	5.0	5.0	5.0	4.4	4.4
scrubber inlet P	6.2	6.3	6.3	6.3	6.3	6.3	6.4	6.4
totaly ch (tons)	58853.6	58902.6	59073.9	59180.8	59342.3	59563.6	59696.4	59751.6

1. Heat source fuel oil No 5.
   Sample taken
2. test start 9:10am inlet
   test stop 12:20
   test start 9:10 am outlet
   test stop 12:30 p.m.

3. Product & feed sample taken

4. Product being processed [illegible] pebble
   [illegible] concentrate

IMC

(6) Run 2 Fluoride (5)
Wed Feb 14, 1973
Dryer

Time	1:35	1:43	2:20	2:45	3:30	4:05	4:35	4:55
Feedrate TPH	300	300	295	260	270	300	340	350
T windbox	1830°F	1830°F	1830°F	1835°F	1830°F	1830°F	1830°F	1830°F
T dryer outlet	175°	175°F	175°F	170°F	170°F	175°F	170°F	170°F
Cyclone Outlet	4.8	5.0	4.8	4.8	4.6	4.6	4.8	5
scrubber inlet P	6.4	6.4	6.4	6.4	6.2	6.2	6.2	6.4
tons (total dryer)	60134.6	60176.4	60[illegible]7.8	60496.3	60722.3	60[illegible]0.2	61057.1	62059.1

inlet Test start 1:45pm stop 4:36pm
outlet start 1:35 pm stop 4:50pm

As you can see testing started five minutes before I took the first reading (see the [illegible]) because I constantly [illegible] and [illegible] the test would start or stop. Samples were taken on the outlet for longer periods of time than the inlet. G. Riley said that was O'K' with you.

Feed sample, product sample and scrubber sample taken during test.

NOTE Run 1 Feb 17, 1973 → Redco was told that we would not start sampling until 9:30 on Feb. 17 due to some phone calls G. Riley had to make. They were to be on site ready to go at the time. When I got to the site at 9:25am testing was underway. They started on their own at 9:10am.

- Bob Herron of IMC recorded the starting date as that [illegible] is O'K'.

[illegible] [illegible] of the product [illegible]

Run 3 Fluoride (6)
Dryer Feb. 15, 1973

Time	8:50am	9:15	10:32	10:20	11:46	12:25
Feedrate	330	380	350	255	250	250
Twindbox	1830°F	1835°F	1835°F	1825°F	1830°F	1835°F
Tdryer outlet	175°F	175°F	175°F	170°F	175°F	175°F
Cyclone P outlet	5.0	5.0	5.0	5.0	5.0	5.0
scrubber inlet P	6.4	6.4	6.4	6.4	6.4	6.4
totdryer (tons)	[illegible]	[illegible]	[illegible]	67609.1	67717.3	[illegible]

Product & Feed sample taken
Inlet Start 9:05am Outlet Start 8:50am
Stop 12:25pm Stop 11:47pm

Product being processed is 100% concentrate

General: See picture NO 3 for location of sample pod (inlet). There was about six inches of mud in the duct work at the bottom. Water sprays were near by.

Appendix D. Field Data

This Appendix contains copies of the original field data sheets and the computer printouts used for volume, velocity, and isokinetic sampling calculations.

At the inlet and outlet locations the meter (or control) box was too far away from the sampling points to directly record stack, sample box, and impinger temperature. The probe technician kept this information and it was later transferred to the field data sheets.

PLANT & CITY	DATE	SAMPLING LOCATION	SAMPLE TYPE
1. I.M.C. KINGSFORD	2/12/[illegible]	INLET - ROCK DRYER	MOISTURE

RUN NO.	OPERATOR	AMB. TEMP (°F)	BAR. PRESS (IN.HG)	STATIC PRESS. (IN.H_2O)	FILTER NUMBER(S)	STACK INSIDE DIMEN. (INCHES)	PITOT TUBE C
2. 0	R.G.	60	30.7	6	—	72.0 x 56.5	18

PROBE LENGTH AND TYPE	NOZZLE I. D. INCHES	H_2O (%)	SAMPLE BOX NO.	METER BOX NO.	METER ΔH @	C FACTOR	PROBE HEAT SET	BOX HEAT SET.	REF. ΔP	RECORD DATA MINS.
3. 4' [illegible]	0.5	—		4	1.67	—	80	—	—	5

EMISSION TESTING FIELD DATA

TRAVERSE POINT NUMBER	SAMPLING TIME, min	CLOCK TIME (24 hr CLOCK)	GAS METER READING (V_m), ft^3	VELOCITY HEAD (Δp_s), in.H_2O	ORIFICE PRESSURE DIFFERENTIAL (ΔH), in.H_2O DESIRED	ORIFICE PRESSURE DIFFERENTIAL (ΔH), in.H_2O ACTUAL	STACK TEMPERATURE (T_s), °F	DRY GAS METER TEMPERATURE INLET ($T_{m_{in}}$), °F	DRY GAS METER TEMPERATURE OUTLET ($T_{m_{out}}$), °F	PUMP VACUUM, in.Hg	SAMPLE BOX TEMPERATURE °F	IMPINGER TEMPERATURE °F
	0	10 40	465.878									
G-3	5		[illegible]	—	—	.75	165	62	60	5	—	[illegible]
	[illegible]		470.50	—				64	60	[illegible]	—	[illegible]
	15		473.0	—				6[illegible]	60	[illegible]		
	[illegible]		476.0	—				70	[illegible]	[illegible]		✓
			478.[illegible]					70	62	5		
	[illegible]	11 10	481.230									
		TOTAL	16.352				AVG =	67	61	64°F		

LEAKAGE @ 12 °Hg = [illegible] CFM

METER COR. 1 . 1 1
7 8 9 10 11

PEDCo - ENVIRONMENTAL
SUITE 8 • ATKINSON SQUARE
CINCINNATI, OHIO 45246

PRELIMINARY VELOCITY TRAVERSE

PLANT I.M.C. KINGSFORD, FLA.
DATE FEB 12 1973
LOCATION ROCK DRYER SCRUBBER INLET
STACK I.D. [illegible]
BAROMETRIC PRESSURE, in. Hg [illegible]
STACK GAUGE PRESSURE, in. H_2O + 5"
OPERATORS R GERSTLE

TRAVERSE POINT NUMBER	VELOCITY HEAD (Δp_s), in. H_2O	STACK TEMPERATURE (T_s), °F
A-1	-0.[illegible]	165
2	1.4	
3	1.5	
4	[illegible]	
5	1.1	
6	[illegible]	
7	0.[illegible]0	
8	[illegible]	
9	[illegible]	
10	[illegible]	
B-1	[illegible]	
2	1.5	
3	1.4	
4	1.2	
5	1.2	
6	1.3	
7	1.4	
8	1.7	
9	1.6	
10	1.0[illegible]	
C-1	[illegible]	170
2	1.8	
3	1.5	
4	1.2	
AVERAGE		

SCHEMATIC OF TRAVERSE POINT LAYOUT

TRAVERSE POINT NUMBER	VELOCITY HEAD (Δp_s), in. H_2O	STACK TEMPERATURE (T_s), °F
AVERAGE		

EPA (Dur) 233
4/72

100 60 min difference between inlet

15 min between ports on inlet

144	2.5
16	50
160	1250

50	144
3	125
150	19
20	
170	

PLANT & CITY	DATE	SAMPLING LOCATION	SAMPLE TYPE
I.M.C. KINGSFORD, FLA.	2/12/23	INLET - ROCK DRYER	PARTICULATE

RUN NO.	OPERATOR	AMB. TEMP (°F)	BAR. PRESS (IN.HG)	STATIC PRESS. ($IN.H_2O$)	FILTER NUMBER(S)	STACK INSIDE DIMEN. (INCHES)	PITOT TUBE
1	R. GRACE & G. PLATT	65	30.41	-1.0	73-225	12 x 56.5	0.85

PROBE LENGTH AND TYPE	NOZZLE I. D. INCHES	H_2O (%)	SAMPLE BOX NO.	METER BOX NO.	METER ΔH @	C FACTOR	PROBE HEAT SET	BOX HEAT SET.	REF. ΔP	RECORD DATA MINS
5' GLASS HEATED	0.350	32		-1	1.57	0.85	300	250	2.65	240

EMISSION TESTING FIELD DATA

Pg - 1 OF 2

TRAVERSE POINT NUMBER	SAMPLING TIME, min	CLOCK TIME (24 hr CLOCK)	GAS METER READING (V_m), ft^3	VELOCITY HEAD (Δp_s), $in.H_2O$	ORIFICE PRESSURE DIFFERENTIAL (ΔH), $in.H_2O$ DESIRED	ORIFICE PRESSURE DIFFERENTIAL (ΔH), $in.H_2O$ ACTUAL	STACK TEMPERATURE (T_s), °F	DRY GAS METER TEMPERATURE INLET ($T_{m_{in}}$), °F	DRY GAS METER TEMPERATURE OUTLET ($T_{m_{out}}$), °F	PUMP VACUUM, in.Hg	SAMPLE BOX TEMPERATURE °F	IMPINGER TEMPERATURE °F
	0	12:47	43.558									
1	2	0455EC		0.28	0.15	0.10	164	69	68	5	240	61
2	4		483.240	1.75	.93	.43						
3	6		84.260	1.40	.73	.35	164					
4	8		93.280	1.20	.64	.54		70	56		155	59
5	10		503.300	1.20	.64	.54	159	70	60			57
6	12		513.320	1.25	.67	.57					240	
7	14		523.340	1.25	.67	.57						
8	16		533.360	.95	.51	.41	162				230	57
9	18		40.100	1.75	.93	.93		74	57			57
10	20		41.240	1.80	.96	.83		74	55			
11	22	15:07		2.00	1.07	.93		76	68			
12	24			.95	.51	.41	164					57
13	26			1.60	.85	.73			58			59
14	28			.80	.43	.37						
15	30		16	.91	.49	.42	160	71	57		240	
16	32			.85	.45	.39		75	59			
17	34			.96	.51	.41	164					
18	36			.85	.45	.39					240	
19	38			1.05	.56	.48						57
20	40		91.45	.75	.40	.34		80	61			
21	42			.70	.37	.32	160	72	59		240	
22	44			.80	.43	.37		73	60			59
23	46		5.2	.70	.37	.32					250	57
24	48		5.1	.70	.37	.32		73	60			
	48.0		2	1.30	.70	.60	162	79	73		232	

CASE @ 5 "Hg = 2.01 CFM

METER COR. 1.11

PEDCo - ENVIRONMENTAL
SUITE 8 • ATKINSON SQUARE
CINCINNATI, OHIO 45246

LOCATION	SAMPLE TYPE
N6 OUTLET	PARTICULATE

ER NUMBER(S)	STACK INSIDE DIMEN. (INCHES)	PITOT TUBE
002	8.3 5	.8

PROBE HEAT SET	BOX HEAT SET.	REF. ΔP	RECORD DATA MINS.
80	250	.55	3

45	46	47	48	49	50	51	52	53	54	55	56	57

S METER RATURE OUTLET ($T_{m_{out}}$), °F	PUMP VACUUM, in.Hg	SAMPLE BOX TEMPERATURE °F	IMPINGER TEMPERATURE °F
86	5.5	240	60
87	5.5	245	56
88	5.0	245	56
88	5.	255	58
88	5.	245	58
89	5.5	240	58
90	6.	240	58
90	6.	255	58
91	6.	245	57
92	6.	255	57
93	6.5	245	57
94	6.0	250	57

PEDCo - ENVIRONMENTAL
SUITE 8 • ATKINSON SQUARE
CINCINNATI, OHIO 45246

PLANT & CITY	DATE	SAMPLING LOCATION	SAMPLE TYPE
I.M.C. KINGSFORD, FLA.	2/12/23	INLET - ROCK DRYER	PARTICULATE

RUN NO.	OPERATOR	AMB. TEMP (°F)	BAR. PRESS (IN.HG)	STATIC PRESS. (IN.H_2O)	FILTER NUMBER(S)	STACK INSIDE DIMEN. (INCHES)	PITO TUBE
1	ROBERTS & G PLANT	65	30.41	-6.0	73-225	20 X 56.5	0.84

PROBE LENGTH AND TYPE	NOZZLE I. D. INCHES	H_2O (%)	SAMPLE BOX NO.	METER BOX NO.	METER ΔH @	C FACTOR	PROBE HEAT SET	BOX HEAT SET.	REF. ΔP	RECORD DATA MINS.
6' GLASS HEATED	0.30	32		-1	1.57	0.83	320	250	3.65	240

Pg - 1 of 2

EMISSION TESTING FIELD DATA

TRAVERSE POINT NUMBER	SAMPLING TIME, min	CLOCK TIME (24 hr CLOCK)	GAS METER READING (V_m), ft^3	VELOCITY HEAD (ΔP_s), in.H_2O	ORIFICE PRESSURE DIFFERENTIAL (ΔH), in.H_2O DESIRED	ORIFICE PRESSURE DIFFERENTIAL (ΔH), in.H_2O ACTUAL	STACK TEMPERATURE (T_s), °F	DRY GAS METER TEMPERATURE INLET ($T_{m_{in}}$), °F	DRY GAS METER TEMPERATURE OUTLET ($T_{m_{out}}$), °F	PUMP VACUUM, in.Hg	SAMPLE BOX TEMPERATURE °F	IMPINGER TEMPERATURE °F
	0	14:11	483.558									
5-1	2	14:15	488.0	0.28	0.16	0.10	164	69	68	5	250	61
-2	4		493.200	1.75	.93	.13						
-3	6		499.260	1.90	.75	.75	164				255	59
-4	8		505.200	1.20	.64	.64		72	56			57
5	10		510.440	1.20	.52	.64	163	70	60		240	
-4	12		516.150	1.25	.52	.57						
-3	14		521.900	1.25	.57	.57					250	55
-2	16		527.650	.57	.31	.31	163	71	57			54
-1	18		533.400	.57	.31	.23		74	58			
9	20		540.150	1.75	.78	.93		73	59			
-2	22		547.240	1.90	.78	.78		75	68		260	
-3	24	15:11	554.240	2.00	.78	.78	164	—	—			56
-4	26		561.240	.95	.31	.31			57			54
5	28		568.240	1.60	.78	.83			58			55
-4	30		575.240	.57	.31	.31	164	76	59		260	
-3	32		582.240	.91	.78	.78		75	59			56
-2	34		589.240	.95	.31	.31						
-1	36		596.240	.96	.51	.31	164				260	
1	38		603.240	.95	.31	.31						56
2	40		610.240	1.05	.78	.78		80				
3	42		617.240	.95	.31	.31			59		260	
4	44		624.240	.79	.31	.31	164	72	59			56
C-1	46		631.240	.70	.31	.31			59		260	
-2	48		638.240	.70	.31	.31						
-3	50		645.240	.70	.31	.31						
-4	52		652.240	.70	.31	.31	164	79	59	4	260	56

LEAKAGE @ 5 "Hg = .201 CFM

GAS METER COR. ___ 7 8 9 10 11

PEDCo - ENVIRONMENTAL
SUITE 8 • ATKINSON SQUARE
CINCINNATI, OHIO 45246

PLANT & CITY	DATE	SAMPLING LOCATION	SAMPLE TYPE
I.M.C. KINGSFORD	2/12/73	INLET - ROCK DRYER	PARTICULATE

RUN NO.	OPERATOR	AMB. TEMP (°F)	BAR. PRESS (IN.HG)	STATIC PRESS. (IN.H_2O)	FILTER NUMBER(S)	STACK INSIDE DIMEN. (INCHES)	PITO TUBE
1	R.G.	70	30.41	6		72 x 56.5	.83

PROBE LENGTH AND TYPE	NOZZLE I. D. INCHES	H_2O (%)	SAMPLE BOX NO.	METER BOX NO.	METER ΔH @	C FACTOR	PROBE HEAT SET	BOX HEAT SET.	REF. ΔP	RECORD DATA MINS.
6' GLASS HEATED	0.180	32		4	1.67	0.53	[illegible]	[illegible]	3.65	2.0

EMISSION TESTING FIELD DATA

Pg 2 of 2

TRAVERSE POINT NUMBER	SAMPLING TIME, min	CLOCK TIME (24 hr CLOCK)	GAS METER READING (V_m), ft^3	VELOCITY HEAD (Δp_s), in.H_2O	ORIFICE PRESSURE DIFFERENTIAL (ΔH), in.H_2O DESIRED	ORIFICE PRESSURE DIFFERENTIAL (ΔH), in.H_2O ACTUAL	STACK TEMPERATURE (T_s), °F	DRY GAS METER TEMPERATURE INLET ($T_{m_{in}}$), °F	DRY GAS METER TEMPERATURE OUTLET ($T_{m_{out}}$), °F	PUMP VACUUM, in.Hg	SAMPLE BOX TEMPERATURE °F	IMPINGER TEMPERATURE °F
	0		.									
C-5	48.		503.800	1.15	.62	.62	164	80	70	5.		
6	50.		4.640	1.00	.53	.53		80	70	.	250	59
7	52.		5.61	1.20	.64	.64	165			.		
8	54.		6.63	1.45	[illegible]	.77				.	225	60
9	56.		7.74	1.80	.95	.95				.	[illegible]	
10	58.		8.225	2.22	.12	.12	165	↓	↓	.		60
B-1	0.	1601	[illegible]	.0	.0	.0		—	—	.	220	61
B-2	60.		9.36	2.00	1.40	1.40	164	74	70	.	220	59
3	62.		10.28	1.65	[illegible]	[illegible]						
4	64.		11.22	1.50	.76	.76		76		.		[illegible]
5	66.		12.45	[illegible]	.75	.75		78		.	[illegible]	
6	68.		13.42	1.38	[illegible]	[illegible]		[illegible]		.		[illegible]
7	72.		15.[illegible]	1.45	[illegible]	[illegible]				.		
8	74.		16.[illegible]	[illegible]	[illegible]	[illegible]				.	250	
9	76.		17.055	.30	[illegible]	[illegible]	[illegible]	80	↓	.		62
A-1	0.	1626	17.[illegible]	-.10	.0	.0		—	—	.	250	
2	78.		18.03	1.60	.86	.86		74	70	.		62
3	80.		19.10	1.50	.78	.78	[illegible]	76	70	.	220	
4	82.		20.11	1.45	.77	.77		78		.		[illegible]
5	84.		21.12	1.40	.74	.74		80		.	250	
6	86.		22.20	1.30	.70	.70		80		.		[illegible]
7	88.		23.02	1.1	.58	.58				.	[illegible]	
8	90.		23.72	.65	.36	.36	[illegible]	↓		.		
9	92.		24.07	.26	.14	.14		76		.	[illegible]	[illegible]
10	94.	1645	524.15	.05	.	.				.		
	100.0		.	.	.	.				.	225	

LEAKAGE @ 15 "Hg = 0.01 CFM

GAS METER COR. 1 . 1 1 (7 8 9 10 11)

PEDCo - ENVIRONMENTAL
SUITE 8 • ATKINSON SQUARE
CINCINNATI, OHIO 45246

DRY MOLECULAR WEIGHT DETERMINATION

17.6
18.0
18.2
53.8

PLANT IMC - KINGSFORD
DATE 2-12-73
SAMPLING TIME (24-hr CLOCK) 1527
SAMPLING LOCATION INLET INLET
SAMPLE TYPE (BAG, INTEGRATED, CONTINUOUS) BAG
ANALYTICAL METHOD ORSAT
AMBIENT TEMPERATURE 74°F
OPERATOR J. GEIGER

COMMENTS: PEDCo Bag #2

RUN / GAS	1		2		3		AVERAGE NET VOLUME	MULTIPLIER	MOLECULAR WEIGHT OF STACK GAS (DRY BASIS) M_d, lb/lb-mole
	ACTUAL READING	NET	ACTUAL READING	NET	ACTUAL READING	NET			
CO_2	2.9	2.9	3.0	3.0	3.0	3.0	2.93	44/100	
O_2 (NET IS ACTUAL O_2 READING MINUS ACTUAL CO_2 READING)	20.5	17.6	21.0	18.0	21.2	18.2	17.93	32/100	
CO (NET IS ACTUAL CO READING MINUS ACTUAL O_2 READING)	20.5	0	21.0	0	21.2	0	0	28/100	
N_2 (NET IS 100 MINUS ACTUAL CO READING)		79.5		79.0		78.8	79.14	28/100	
							TOTAL		

PEDCo-ENVIRONMENTAL
SUITE 8 • ATKINSON SQUARE
CINCINNATI, OHIO 45246
513/771-4330

ANALYTICAL DATA

PLANT IMC - Kingsford

DATE 7 [illegible]

SAMPLING LOCATION [illegible] INLET

SAMPLE TYPE PARTICULATE

RUN NUMBER I-1

SAMPLE BOX NUMBER

CLEAN-UP MAN J. SLICER

COMMENTS: [illegible]

[illegible] INLET [illegible]

46 ml [illegible]

Filter [illegible]

FRONT HALF

ACETONE WASH OF NOZZLE, PROBE, CYCLONE (BYPASS), FLASK, FRONT HALF OF FILTER HOLDER

FILTER NUMBER 73-025

LABORATORY RESULTS

CONTAINER 73-[illegible]-501 _____ mg

CONTAINER 73-[illegible]-502 _____ mg

FRONT HALF SUBTOTAL _____ mg

BACK HALF

IMPINGER CONTENTS AND WATER WASH OF IMPINGERS, CONNECTORS, AND BACK HALF OF FILTER HOLDER

CONTAINER 73-[illegible]-503 _____ mg

ETHER-CHLOROFORM EXTRACTION 73-[illegible]-504 _____ mg

ACETONE WASH OF IMPINGERS, CONNECTORS, AND BACK HALF OF FILTER HOLDER

CONTAINER 73-[illegible]-505 _____ mg

BACK HALF SUBTOTAL _____ mg

TOTAL WEIGHT _____ mg

MOISTURE

IMPINGERS

FINAL VOLUME 600 ml

INITIAL VOLUME [illegible] ml

NET VOLUME 400 ml

486 1st imp

46

[illegible]

SILICA GEL

FINAL WEIGHT 210.5 g _____ g _____ g

INITIAL WEIGHT [illegible] g _____ g _____ g

NET WEIGHT [illegible] g _____ g _____ g

TOTAL MOISTURE 410.5 g

PEDCo-ENVIRONMENTAL
SUITE 8 • ATKINSON SQUARE
CINCINNATI, OHIO 45246
513/771-4330

NOMOGRAPH DATA

PLANT IMC

DATE 2/12/

SAMPLING LOCATION

CALIBRATED PRESSURE DIFFERENTIAL ACROSS ORIFICE, in. H_2O	$\Delta H_@$	
AVERAGE METER TEMPERATURE (AMBIENT + 20 °F), °F	$T_{m_{avg.}}$	80
PERCENT MOISTURE IN GAS STREAM BY VOLUME	B_{wo}	
BAROMETRIC PRESSURE AT METER, in. Hg	P_m	
STATIC PRESSURE IN STACK, in. Hg ($P_m \pm 0.073$ x STACK GAUGE PRESSURE in in. H_2O)	P_s	
RATIO OF STATIC PRESSURE TO METER PRESSURE	P_s/P_m	
AVERAGE STACK TEMPERATURE, °F	$T_{s_{avg.}}$	
AVERAGE VELOCITY HEAD, in. H_2O	$\Delta p_{avg.}$	
MAXIMUM VELOCITY HEAD, in. H_2O	$\Delta p_{max.}$	
C FACTOR		
CALCULATED NOZZLE DIAMETER, in.		
ACTUAL NOZZLE DIAMETER, in.		
REFERENCE Δp, in. H_2O		

1. PLANT & CITY	DATE	SAMPLING LOCATION	SAMPLE TYPE
IMC KINGSFORD FLA.	02/12/73	ROCK DRYING OUTLET	PARTICULATE

2. RUN NO.	OPERATOR	AMB. TEMP (°F)	BAR. PRESS (IN.HG)	STATIC PRESS. (IN.H_2O)	FILTER NUMBER(S)	STACK INSIDE DIMEN. (INCHES)	PITOT TUBE
#1	O'CONNOR - MEER	60	30.41	-2.1	73-002	8.35	.84

3. PROBE LENGTH AND TYPE	NOZZLE I. D. INCHES	H_2O (%)	SAMPLE BOX NO.	METER BOX NO.	METER ΔH @	C FACTOR	PROBE HEAT SET	BOX HEAT SET.	REF. ΔP	RECORD DATA MINS.
6 & 8FT. GLASS HEATED	0.277	22	A	5	1.49	0.62	80	250	.55	3

EMISSION TESTING FIELD DATA

TRAVERSE POINT NUMBER	SAMPLING TIME, min	CLOCK TIME (24 hr CLOCK)	GAS METER READING (V_m), ft^3	VELOCITY HEAD (Δp_s), in.H_2O	ORIFICE PRESSURE DIFFERENTIAL (ΔH), in.H_2O DESIRED	ORIFICE PRESSURE DIFFERENTIAL (ΔH), in.H_2O ACTUAL	STACK TEMPERATURE (T_s), °F	DRY GAS METER TEMPERATURE INLET ($T_{m_{in}}$), °F	DRY GAS METER TEMPERATURE OUTLET ($T_{m_{out}}$), °F	PUMP VACUUM, in.Hg	SAMPLE BOX TEMPERATURE °F	IMPINGER TEMPERATURE °F
	0	1435	846.608									
A 24	3		8.510	.25	.88	.72	150	74	72	03.	225	62
A 23	6		850.120	.22	.74	.76	150	76	74	3.	270	61
22	9		52.220	.48	1.06	1.05	150	80	75	4.	260	61
21	12		4.680	.52	1.75	1.75	150	85	76	5.	235	61
20	15		6.930	.53	1.78	1.75	150	90	77	5.	270	65
19	18		9.080	.38	1.28	1.3	150	94	79	4.	250	66
18	21		61.520	.58	1.95	1.95	150	96	80	6.	255	66
17	24		4.050	.57	1.70	1.90	150	98	82	5.5	255	66
16	27		6.410	.48	1.62	1.65	151	101	83	5.	255	66
15	30		8.850	.50	1.70	1.70	151	102	84	5.	260	67
14	33		70.040	.47	1.58	1.60	151	103	85	5.	260	67
13	36		2.760	.21	.72	.75	151	104	87	3.	275	68
12	39	1514	874.390	.25	.86	.88	151	102	88	3.	270	68
	END	1514										

LEAKAGE @ 15 "Hg = 0 CFM

GAS METER COR. _ _ . _ _ (7 8 9 10 11)

PEDCo - ENVIRONMENTAL
SUITE 8 • ATKINSON SQUARE
CINCINNATI, OHIO 45246

1.	PLANT & CITY	DATE	SAMPLING LOCATION	SAMPLE TYPE
	IMC KINGSFORD FLA	03/12/73	ROCK DRYING OUTLET	PARTICULATE

2.	RUN NO.	OPERATOR	AMB. TEMP (°F)	BAR. PRESS (IN.HG)	STATIC PRESS. ($IN.H_2O$)	FILTER NUMBER(S)	STACK INSIDE DIMEN. (INCHES)	PITOT TUBE
	1	O'CONNER - MEEK	61	30.41	-2.1	73-002	83.5	.8

3.	PROBE LENGTH AND TYPE	NOZZLE I. D. INCHES	H_2O (%)	SAMPLE BOX NO.	METER BOX NO.	METER ΔH @	C FACTOR	PROBE HEAT SET	BOX HEAT SET.	REF. ΔP	RECORD DATA MINS.
	4FT GLASS HEATED	.277	22	A	5	1.49	0.62	80	250	.55	3

EMISSION TESTING FIELD DATA

TRAVERSE POINT NUMBER	SAMPLING TIME, min	CLOCK TIME (24 hr CLOCK)	GAS METER READING (V_m), ft^3	VELOCITY HEAD (Δp_s), $in.H_2O$	ORIFICE PRESSURE DIFFERENTIAL (ΔH), $in.H_2O$ DESIRED	ORIFICE PRESSURE DIFFERENTIAL (ΔH), $in.H_2O$ ACTUAL	STACK TEMPERATURE (T_s), °F	DRY GAS METER TEMPERATURE INLET ($T_{m_{in}}$), °F	DRY GAS METER TEMPERATURE OUTLET ($T_{m_{out}}$), °F	PUMP VACUUM, in.Hg	SAMPLE BOX TEMPERATURE °F	IMPINGER TEMPERATURE °F
	0	[illegible]	•									
A-11	42.	1530	876.660	.42	1.40	1.42	151	88	84	4.	245	70
A 10	45.		9.025	.58	1.94	1.90	151	92	86	5.5	255	65
9	48.		81.850	.73	2.45	2.45	151	98	86	7.	260	62
8	51.		4.710	.77	2.60	2.60	151	104	88	8.	255	64
7	54.		7.670	.77	2.60	2.60	154	108	89	8.	265	66
6	57.		90.635	.78	2.62	2.60	154	112	90	8.2	275	70
5	60.		3.615	.78	2.62	2.62	154	115	91	8.5	280	76
4	63.		6.520	.72	2.40	2.40	154	116	92	8.	250	73
3	66.		9.290	.62	2.09	2.10	153	118	93	7.5	260	74
2	69.		901.935	.61	2.07	2.07	153	118	94	7.5	260	73
1	72.	1603	904.398	.50	1.70	1.70	153	118	95	6.5	260	73
	.		•	•	•	•				•		
	END.	1603	•	•	•	•				•		
	.		•	•	•	•				•		
	.		•	•	•	•				•		
	.		•	•	•	•				•		
	.		•	•	•	•				•		
	.		•	•	•	•				•		
	.		•	•	•	•				•		
	.		•	•	•	•				•		
	.		•	•	•	•				•		
	.		•	•	•	•				•		
	.		•	•	•	•				•		
	.		•	•	•	•				•		

LEAKAGE @ ____ "Hg = ____ CFM

GAS METER COR. _.__ (7 8 9 10 11)

* SEE REVERSE SIDE

PEDCo - ENVIRONMENTAL
SUITE 8 • ATKINSON SQUARE
CINCINNATI, OHIO 45246

* - Meter box pump acted odd at start of second half of port A. Sounded like vanes of pump were sticking. It didn't effect test any and only lasted a minute or two. It caused ~~a~~ orifice pressure differential & fall. Readjusted by turning valves on pump. After pump freed itself and started running smooth again the opposite was true and another readjustment

1 - Changed Silica Gel Impinger at end of testing port A

PLANT & CITY	DATE	SAMPLING LOCATION	SAMPLE TYPE
IMC, KINGSFORD FLA.	02/12/73	ROCK DRYING OUTLET	PARTICULATE

RUN NO.	OPERATOR	AMB. TEMP (°F)	BAR. PRESS (IN.HG)	STATIC PRESS. ($IN.H_2O$)	FILTER NUMBER(S)	STACK INSIDE DIMEN. (INCHES)	PITOT TUBE
1	O'CONNER - MEER	65	30.41	-2.1	73-002	8.3 X	S

PROBE LENGTH AND TYPE	NOZZLE I. D. INCHES	H_2O (%)	SAMPLE BOX NO.	METER BOX NO.	METER ΔH @	C FACTOR	PROBE HEAT SET	BOX HEAT SET.	REF. ΔP	RECORD DATA MINS.
8 FT GLASS - HEATED	0.277	22	A	5	1.49	0.62	80	250	.55	3

EMISSION TESTING FIELD DATA

TRAVERSE POINT NUMBER	SAMPLING TIME, min	CLOCK TIME (24 hr CLOCK)	GAS METER READING (V_m), ft^3	VELOCITY HEAD (Δp_s), $in.H_2O$	ORIFICE PRESSURE DIFFERENTIAL (ΔH), $in.H_2O$		STACK TEMPERATURE (T_s), °F	DRY GAS METER TEMPERATURE		PUMP VACUUM, in.Hg	SAMPLE BOX TEMPERATURE °F	IMPINGER TEMPERATURE °F
	0	[redacted]	904.398		DESIRED	ACTUAL		INLET ($T_{m_{in}}$), °F	OUTLET ($T_{m_{out}}$), °F			
B-24	~~2.75~~ W.	1621	6.410	.33	1.12	1.10	150	90	86	5.5	240	60
23	178.		8.550	.35	1.19	1.20	150	92	87	5.5	245	56
22	81.		10.340	.28	.95	.98	150	95	88	5.0	245	56
21	84.		12.225	.30	1.01	.99	150	98	88	5.	255	58
20	87.		4.075	.31	1.05	1.05	150	100	88	5.	245	58
19	90.		6.075	.37	1.26	1.25	152	102	89	5.5	240	58
18	93.		8.180	.39	1.31	1.32	152	104	90	6.	240	58
17	96.		20.270	.37	1.26	1.26	150	105	90	6.	255	58
16	99.		2.225	.40	1.35	1.35	150	106	91	6.	245	57
15	102.		4.340	.36	1.22	1.25	151	109	92	6.	255	57
14	105.		6.510	.43	1.45	1.45	149	110	93	6.5	245	57
13	108.	1657	928.448	.37	1.26	1.25	150	113	94	6.0	250	57
		END	1657									

LEAKAGE @ ____ °Hg = ____ CFM

GAS METER COR. ____

PEDCo - ENVIRONMENTAL
SUITE 8 • ATKINSON SQUARE
CINCINNATI, OHIO 45246

[redacted]

1. PLANT & CITY	DATE	SAMPLING LOCATION	SAMPLE TYPE
	02/12/73		

2. RUN NO.	OPERATOR	AMB. TEMP (°F)	BAR. PRESS (IN.HG)	STATIC PRESS. ($IN.H_2O$)	FILTER NUMBER(S)	STACK INSIDE DIMEN. (INCHES)	PITOT TUBE
1							

3. PROBE LENGTH AND TYPE	NOZZLE I. D. INCHES	H_2O (%)	SAMPLE BOX NO.	METER BOX NO.	METER ΔH @	C FACTOR	PROBE HEAT SET	BOX HEAT SET.	REF. ΔP	RECORD DATA MINS.
4 FT GLASS - HEATED										

EMISSION TESTING FIELD DATA

TRAVERSE POINT NUMBER	SAMPLING TIME, min	CLOCK TIME (24 hr CLOCK)	GAS METER READING (V_m), ft^3	VELOCITY HEAD (Δp_s), $in.H_2O$	ORIFICE PRESSURE DIFFERENTIAL (ΔH), $in.H_2O$		STACK TEMPERATURE (T_s), °F	DRY GAS METER TEMPERATURE		PUMP VACUUM, in.Hg	SAMPLE BOX TEMPERATURE °F	IMPINGER TEMPERATURE °F
					DESIRED	ACTUAL		INLET ($T_{m_{in}}$), °F	OUTLET ($T_{m_{out}}$), °F			
	0	[redacted]	928.448									
B-12	[redacted]	1710	930.205	.23	.78	.79	150	95	89	4.5	235	56
11	1114.		2.225	.38	1.29	1.30	151	98	90	6.	220	56
10	117.		3.485	.52	1.75	1.80	151	102	91	8.5	240	55
9	120.		7.270	.68	2.30	2.30	151	108	92	11.0	250	55
8	123.		940.200	.78	2.60	2.60	151	112	92	13.5	270	56
7	126.		3.375	.86	2.90	2.90	151	117	93	14.5	275	56
6	129.		6.430	.87	2.92	2.92	151	122	94	15.0	275	60
5	132.		9.530	.84	2.90	2.85	150	125	95	15.5	280	65
4	135.		952.690	.84	2.75	2.75	150	129	96	15.2	275	65
3	138.		5.750	.81	2.70	2.70	151	132	98	15.0	280	70
2	141.		8.875	.78	2.60	2.60	150	133	100	11.0	275	73
1	144.	1746	961.534	.60	2.00	2.00	150	133	101	8.0	270	83
	EOT.	1746										

LEAKAGE @ ____ "Hg = ____ CFM

GAS METER COR. ___.___

PEDCo - ENVIRONMENTAL
SUITE 8 • ATKINSON SQUARE
CINCINNATI, OHIO 45246

PRELIMINARY VELOCITY TRAVERSE

PLANT IMC
DATE 2/12/73
LOCATION DRYER OUTLET
STACK I.D. 83"
BAROMETRIC PRESSURE, in. Hg 30.38
STACK GAUGE PRESSURE, in. H_2O
OPERATORS O'CONNOR - MEEK

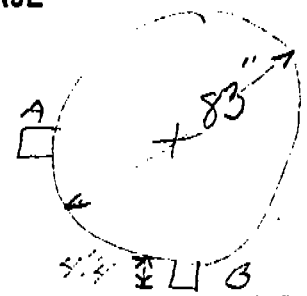

SCHEMATIC OF TRAVERSE POINT LAYOUT

TIME 10:50 - 11:10

TRAVERSE POINT NUMBER	VELOCITY HEAD (Δp_s), in. H_2O	STACK TEMPERATURE (T_s), °F
A-1	.57	142
2	.75	
3	.87	
4	.88	
5	.88	
6	.85	
7	.84	
8	.75	
9	.67	
10	.53	
11	.37	
12	.22	
13	.14	
14	.20	
15	.26	
16	.33	
17	.46	
18	.46	
19	.50	
20	.53	
21	.57	
22	.67	
23	.72	
24	.68	142
AVERAGE	.569	

TRAVERSE POINT NUMBER	VELOCITY HEAD (Δp_s), in. H_2O	STACK TEMPERATURE (T_s), °F
B-1	.75	142
2	.76	
3	.98	
4	.97	
5	.97	
6	.93	
7	.91	
8	.83	
9	.69	
10	.53	
11	.37	
12	.16	
13	.18	
14	.26	
15	.32	
16	.33	
17	.41	
18	.41	
19	.42	
20	.43	
21	.46	
22	.47	
23	.55	
24	.57	142
AVERAGE	.569	

EPA (Dur) 233
4/72

TRAVERSE POINT LOCATION FOR CIRCULAR DUCTS

PLANT IMC
DATE 2-12-73
SAMPLING LOCATION Dryer Outlet
INSIDE OF FAR WALL TO OUTSIDE OF NIPPLE, (DISTANCE A)
INSIDE OF NEAR WALL TO OUTSIDE OF NIPPLE, (DISTANCE B)
STACK I.D., (DISTANCE A - DISTANCE B)
NEAREST UPSTREAM DISTURBANCE 10+ (2.0 dia)
NEAREST DOWNSTREAM DISTURBANCE 6ft (0.5 dia)
CALCULATOR C.E. Ruby
Sampling points – 48 (3 min each) (144)

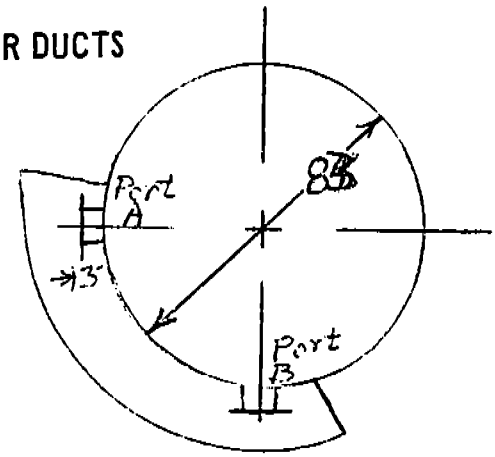

SCHEMATIC OF SAMPLING LOCATION

TRAVERSE POINT NUMBER	FRACTION OF STACK I.D.	STACK I.D.	PRODUCT OF COLUMNS 2 AND 3 (TO NEAREST 1/8 INCH)	DISTANCE B	TRAVERSE POINT LOCATION FROM OUTSIDE OF NIPPLE (SUM OF COLUMNS 4 & 5)
1	1.1	83"	1.0	3"	4" 5 1/4
2	3.2	↑	2 5/8	↑	5 2/3 6 7/8
3	5.5		4 3/4		7 7/8 8 7/8
4	7.9		6 5/8		9 5/8 10 7/8
5	10.5		8 7/8		11 1/8 13 1/2
6	13.2		11.0		14 15 1/4
7	16.1		13 1/2		16 1/2 17 3/4
8	19.4		16 1/4		19 1/4 20 1/2
9	23.0		19 3/8		22 3/8 23 5/8
10	27.2		22 7/8		25 7/8 27 1/8
11	32.3		27		30 31 1/4
12	39.8		33 1/2		36 1/2 37 3/4
13	60.2		50 1/2		53 1/2 54 3/4
14	67.7		~~57~~ 57		60 61 1/4
15	72.8		61 1/8		64 1/3 65 3/8
16	77.0		64 5/8		67 3/8 68 3/4
17	80.6		67 3/4		70 3/4 72
18	83.9		70 1/2		73 1/2 74 3/4
19	86.8		73		76 77 1/4
20	89.5		75 1/8		78 1/8 79 3/8
21	92.1		77 3/8		80 3/8 81 5/8
22	94.5		79 3/8		82 3/8 83 5/8
23	96.8	↓	81 3/8	↓	84 3/8 85 5/8
24	98.9	83"	83	3"	86 87 1/4

EP (Dur) 232
4/72

ANALYTICAL DATA

PLANT IMC

DATE 2-17-76

SAMPLING LOCATION DRYER OUTLET

SAMPLE TYPE Particulate

RUN NUMBER O-I

SAMPLE BOX NUMBER A

CLEAN-UP MAN J. [illegible]

COMMENTS:

1) [illegible]

2)

FRONT HALF

LABORATORY RESULTS

ACETONE WASH OF NOZZLE, PROBE, CYCLONE (BYPASS), FLASK, FRONT HALF OF FILTER HOLDER — CONTAINER [illegible] _____ mg

FILTER NUMBER 73-002 — CONTAINER [illegible] _____ mg

FRONT HALF SUBTOTAL _____ mg

BACK HALF

2 containers

IMPINGER CONTENTS AND WATER WASH OF IMPINGERS, CONNECTORS, AND BACK HALF OF FILTER HOLDER — CONTAINER [illegible] _____ mg

ETHER-CHLOROFORM EXTRACTION 73-002-509 _____ mg

ACETONE WASH OF IMPINGERS, CONNECTORS, AND BACK HALF OF FILTER HOLDER — CONTAINER [illegible] _____ mg

BACK HALF SUBTOTAL _____ mg

TOTAL WEIGHT _____ mg

MOISTURE

IMPINGERS

FINAL VOLUME	[illegible]	ml
INITIAL VOLUME	[illegible]	ml
NET VOLUME	[illegible]	ml

SILICA GEL

FINAL WEIGHT	[illegible] g	[illegible] g	_____ g
INITIAL WEIGHT	[illegible] g	[illegible] g	_____ g
NET WEIGHT	[illegible] g	[illegible] g	_____ g

TOTAL MOISTURE 861.5 g

DRY MOLECULAR WEIGHT DETERMINATION

PLANT IMC - Kingsport

DATE 2-12-73

SAMPLING TIME (24-hr CLOCK)

SAMPLING LOCATION DRYER - OUTLET

SAMPLE TYPE (BAG, INTEGRATED, CONTINUOUS) BAG

ANALYTICAL METHOD ORSAT

AMBIENT TEMPERATURE 68°F

OPERATOR J. GEIGER, R. G.

COMMENTS: Pedco Bag #3

GAS \ RUN	1		2		3		AVERAGE NET VOLUME	MULTIPLIER	MOLECULAR WEIGHT OF STACK GAS (DRY BASIS) M_d, lb/lb-mole
	ACTUAL READING	NET	ACTUAL READING	NET	ACTUAL READING	NET			
CO_2	5.0	5.0	5.0	5.0	5.0	5	5.0	44/100	2.20
O_2 (NET IS ACTUAL O_2 READING MINUS ACTUAL CO_2 READING)	20.6	15.6	20.3	15.3	20.4	15.4	15.43	32/100	4.94
CO (NET IS ACTUAL CO READING MINUS ACTUAL O_2 READING)	23.1	—	20.4	0.1	20.4	0	0.03	28/100	0.01
N_2 (NET IS 100 MINUS ACTUAL CO READING)	X		79.6		79.6		79.54	28/100	22.27
								TOTAL	29.42

PEDCo-ENVIRONMENTAL
SUITE 8 • ATKINSON SQUARE
CINCINNATI, OHIO 45246
513/771-4330

	PLANT & CITY	DATE	SAMPLING LOCATION	SAMPLE TYPE
1.	I.M.C. KINGSFORD FLA	2/13/73	INLET - ROCK DRYER	PARTICULATE

	RUN NO.	OPERATOR	AMB. TEMP (°F)	BAR. PRESS (IN.HG)	STATIC PRESS (IN.H_2O)	FILTER NUMBER(S)	STACK INSIDE DIMEN. (INCHES)	PITOT TUBE
2.	2	R. GERSTLE & G. PARNELL	70	30.40	+6.0	73-027	72 x 56.5	0.83

	PROBE LENGTH AND TYPE	NOZZLE I. D. INCHES	H_2O (%)	SAMPLE BOX NO.	METER BOX NO.	METER ΔH @	C FACTOR	PROBE HEAT SET	BOX HEAT SET.	REF. ΔP	RECORD DATA MINS.
3.	6' GLASS	0.180	32	1	4	1.67	0.53	80	250	3.65	2.5

EMISSION TESTING FIELD DATA

Pg. 1

TRAVERSE POINT NUMBER	SAMPLING TIME, min	CLOCK TIME (24 hr CLOCK)	GAS METER READING (V_m), ft^3	VELOCITY HEAD (Δp_s), in.H_2O	ORIFICE PRESSURE DIFFERENTIAL (ΔH), in.H_2O DESIRED	ORIFICE PRESSURE DIFFERENTIAL (ΔH), in.H_2O ACTUAL	STACK TEMPERATURE (T_s), °F	DRY GAS METER TEMPERATURE INLET ($T_{m_{in}}$), °F	DRY GAS METER TEMPERATURE OUTLET ($T_{m_{out}}$), °F	PUMP VACUUM, in.Hg	SAMPLE BOX TEMPERATURE °F	IMPINGER TEMPERATURE °F
	0	9:16	525.260									
A-1	2.5		25.77	0.18	.10	.10	164	68	68	5.	240	58
2	5.		26.90	1.20	.64	.64		68	68		245	58
3	7.5		28.14	1.25	.67	.67		70	70		255	56
4	10.		29.30	1.20	.64	.64		70	70		220	56
5	12.5		30.53	1.10	.59	.59		70			245	56
6	15.		31.51	0.96	.52	.52		72			245	57
7	17.5		32.57	0.92	.49	.49		74			240	57
8	20.		33.45	0.65	.35	.35		74			255	58
9	22.5		33.95	0.13	.08	.08					230	59
10	0 ~~25.~~		34.00	0.0	.0	.0					210	60
B-1	25.	945	34.35	.20	.10	.10		70	70		235	67
2	27.5		35.42	1.90	1.00	1.00		76	72		230	62
3	30.		36.80	1.65	.87	.87		78	72		245	59
4	32.5		38.10	1.40	.74	.74		80	72		245	60
5	35.		39.38	1.30	.70	.70		80	74		245	60
6	37.5		40.60	1.35	.71	.71		81	74		210	61
7	40.		41.90	1.50	.79	.79		82	74		245	63
8	42.5		43.26	1.50	.79	.79		83	74		230	66
9	45.		44.32	0.85	.46	.46		81	74		250	64
10	47.5		44.80	0.13	.09	.09	164	80	75		235	64
C-1	50.	1015	45.30	0.15	.095	.09	165	80	74		210	67
2	52.5		46.60	1.5	.79	.79	165	82	76		235	62
3	55.		47.95	1.6	.85	.85	165	82	78		210	62
4	57.5		549.23	1.25	.67	.67	165	82	78		225	62

LEAKAGE @ 11 "Hg = 0 CFM

55.86

.62

GAS METER COR. 1.11

PEDCo - ENVIRONMENTAL
SUITE 8 • ATKINSON SQUARE
CINCINNATI, OHIO 45246

	PLANT & CITY	DATE	SAMPLING LOCATION	SAMPLE TYPE
1.	F.M.C. KINGSFORD, FLA.	2/1/73 / 1/73	INLET - ROCK DRYER	PARTICULATE

	RUN NO.	OPERATOR	AMB. TEMP (°F)	BAR. PRESS (IN.HG)	STATIC PPESS. ($IN.H_2O$)	FILTER NUMBER(S)	STACK INSIDE DIMEN. (INCHES)	PITOT TUBE C
2.	2	R. GERSTLE AND G. PARNELL	75	30.40	+6.0	73-027	7.25 x 5.65	0.83

	PROBE LENGTH AND TYPE	NOZZLE I. D. INCHES	H_2O (%)	SAMPLE BOX NO.	METER BOX NO.	METER Δ H @	C FACTOR	PROBE HEAT SET	BOX HEAT SET.	REF. ΔP	RECORD DATA MINS.
3.	6' GLASS	0.180	32	1	4	1.67	0.53	80	250	3.65	215

EMISSION TESTING FIELD DATA

Pg 2

TRAVERSE POINT NUMBER	SAMPLING TIME, min (0 = —)	CLOCK TIME (24 hr CLOCK)	GAS METER READING (V_m), ft^3	VELOCITY HEAD (Δp_s), $in.H_2O$	ORIFICE PRESSURE DIFFERENTIAL (ΔH), $in.H_2O$ DESIRED	ORIFICE PRESSURE DIFFERENTIAL (ΔH), $in.H_2O$ ACTUAL	STACK TEMPERATURE (T_s), °F	DRY GAS METER TEMPERATURE INLET ($T_{m_{in}}$), °F	DRY GAS METER TEMPERATURE OUTLET ($T_{m_{out}}$), °F	PUMP VACUUM, in.Hg	SAMPLE BOX TEMPERATURE °F	IMPINGER TEMPERATURE °F
C-5	60.	*	550.420	1.20	.69	.69	165	82	78		250	63
6	62.5		51.38	1.05	.59	.59	165	84	79	5	240	64
7	65.		52.74	1.10	.59	.59	165	86	80	"	230	65
8	67.5		54.035	1.40	.73	.73	165	86	80	"	235	65
9	70.		55.35	1.70	1.10	1.10	165	87	80	"	215	67
↓10	72.5		56.800	2.0	.55	.55	165	87	80	"	245	68
0-1	75.	10:52	57.57	.35	.19	.19	165	80	80	"	240	75
2	77.5		58.73	1.10	.59	.59		81		"	240	69
3	80.		59.98	1.35	.72	.72		81		"	240	70
4	82.5	11:00*	61.285	1.20	.63	.63		82		"	250	64
5	85.	12:51	62.31	1.15	.61	.61		76	76	"	255	67
6	87.5		63.46	1.15	.61	.61		78	76	"	240	63
7	90.		64.62	1.22	.66	.66		78	76	"	240	60
8	92.5		65.85	1.30	.70	.70		80	76	↓	240	60
9	95.		67.15	1.60	.86	.86		80	76	6	225	61
↓10	97.5		562.43	1.40	.75	.75	165	80	78	6	240	62
E-1	100.	1310	69.46	1.0	.56	.56	164	80	76	5	245	65
2	102.5		70.74	1.40	.75	.75		81	76	"	230	66
3	105.		71.92	1.30	.70	.70		82	78	"	220	65
4	107.5		73.17	1.30	.70	.70		83	78	"	250	67
5	110.		74.34	1.25	.67	.67		84	78	"	250	66
6	112.5		75.60	1.45	.76	.76		84	78	"	240	69
7	115.		76.89	1.5	.80	.80		86	79	"	255	73
8	117.5		78.26	1.6	.86	.86		86	80	"	240	73
9	120.		79.67	2.0	1.05	1.05		87	80	"	240	75
10	122.5	1335	81.120	1.9	1.00	1.00	164	88	80	↓	245	74
	125.											

LEAKAGE @ ____ "Hg = ____ CFM

GAS METER COR. ____ (7 8 9 10 11)

* STOP - PLANT SHUT DOWN

3.07

PEDCo - ENVIRONMENTAL
SUITE 8 • ATKINSON SQUARE
CINCINNATI, OHIO 45246

ANALYTICAL DATA

PLANT IMC Kingsford

DATE 2-13-73

SAMPLING LOCATION DRYER INLET

SAMPLE TYPE Particulate

RUN NUMBER 2-I

SAMPLE BOX NUMBER

CLEAN-UP MAN J. Geiger

COMMENTS:

486.0
230

FRONT HALF

ACETONE WASH OF NOZZLE, PROBE, CYCLONE (BYPASS), FLASK, FRONT HALF OF FILTER HOLDER

FILTER NUMBER 73-007

LABORATORY RESULTS

CONTAINER 73-007-513 _____ mg

CONTAINER 73-007-514 _____ mg

FRONT HALF SUBTOTAL _____ mg

BACK HALF

IMPINGER CONTENTS AND WATER WASH OF IMPINGERS, CONNECTORS, AND BACK HALF OF FILTER HOLDER

ACETONE WASH OF IMPINGERS, CONNECTORS, AND BACK HALF OF FILTER HOLDER

(2) CONTAINERS (2 cont.) 515 _____ mg

ETHER-CHLOROFORM EXTRACTION 516 _____ mg

CONTAINER 73-007-517 _____ mg

BACK HALF SUBTOTAL _____ mg

TOTAL WEIGHT _____ mg

MOISTURE

IMPINGERS

FINAL VOLUME	745.0 ml	200+ 500 45 745
INITIAL VOLUME	200.0 ml	23
NET VOLUME	545.0 ml	706.9

SILICA GEL

FINAL WEIGHT	223.0 g	_____ g	_____ g
INITIAL WEIGHT	200.0 g	200.0 g	_____ g
NET WEIGHT	23.0 g	_____ g	_____ g

TOTAL MOISTURE 500.0 g

DRY MOLECULAR WEIGHT DETERMINATION

PLANT IMC - Kingsford
DATE 2-13-93
SAMPLING TIME (24-hr CLOCK) 0920 - 1020
SAMPLING LOCATION DRYER INLET PART TEST #2
SAMPLE TYPE (BAG, INTEGRATED, CONTINUOUS) BAG
ANALYTICAL METHOD CRSAT
AMBIENT TEMPERATURE 73°F
OPERATOR NORMAN KULOJIAN

COMMENTS:

RUN / GAS	1		2		3		AVERAGE NET VOLUME	MULTIPLIER	MOLECULAR WEIGHT OF STACK GAS (DRY BASIS) M_d, lb/lb-mole
	ACTUAL READING	NET	ACTUAL READING	NET	ACTUAL READING	NET			
CO_2	3.0	3.0	3.3	3.3	3.3	3.3	3.2	44/100	1.408
O_2 (NET IS ACTUAL O_2 READING MINUS ACTUAL CO_2 READING)	20.4	17.4	20.9	17.6	20.8	17.5	17.5	32/100	5.600
CO (NET IS ACTUAL CO READING MINUS ACTUAL O_2 READING)	20.5	0.1	20.9	0.0	20.8	0.0	0.03	28/100	0.009
N_2 (NET IS 100 MINUS ACTUAL CO READING)	79.5	79.5	79.1	79.1	79.2	79.2	79.3	28/100	22.204
								TOTAL	29.221

PEDCo-ENVIRONMENTAL
SUITE 8 · ATKINSON SQUARE
CINCINNATI, OHIO 45246
513/771-4330

	PLANT & CITY	DATE	SAMPLING LOCATION	SAMPLE TYPE
1.	IMC KINGSFORD FLA	02/13/73	ROCK DRYING OUTLET	PARTICULATE

RUN NO.	OPERATOR	AMB. TEMP (°F)	BAR. PRESS (IN.HG)	STATIC PRESS. ($IN.H_2O$)	FILTER NUMBER(S)	STACK INSIDE DIMEN. (INCHES)	PITOT TUBE
2. 2	O'CONNOR - MEER	75	30.40	-.21	73-004	8.35 X	.8

PROBE LENGTH AND TYPE	NOZZLE I. D. INCHES	H_2O (%)	SAMPLE BOX NO.	METER BOX NO.	METER ΔH @	C FACTOR	PROBE HEAT SET	BOX HEAT SET	REF. ΔP	RECORD DATA MINS.
3. 8 FT GLASS-HEATED	.277	28	A	5 (3)	1.49 (1.55)	.56	80	(250)	.62	3

4'x8', IN USE FOR TEST

EMISSION TESTING FIELD DATA

TRAVERSE POINT NUMBER	SAMPLING TIME, min	CLOCK TIME (24 hr CLOCK)	GAS METER READING (V_m), ft^3	VELOCITY HEAD (Δp_s), $in.H_2O$	ORIFICE PRESSURE DIFFERENTIAL (ΔH), $in.H_2O$ DESIRED	ORIFICE PRESSURE DIFFERENTIAL (ΔH), $in.H_2O$ ACTUAL	STACK TEMPERATURE (T_s), °F	DRY GAS METER TEMPERATURE INLET ($T_{m_{in}}$), °F	DRY GAS METER TEMPERATURE OUTLET ($T_{m_{out}}$), °F	PUMP VACUUM, in.Hg	SAMPLE BOX TEMPERATURE °F	IMPINGER TEMPERATURE °F
	0	0915	961.812									
A-24	03.	18	4.390	0.65	1.98	2.0	148	69	64	6.	235	58
23	06.	21	9.950	.64	1.90	1.95	148	74	65	5.	240	58
22	09.	24	9.380	.62	1.85	1.85	148	79	66	5.	255	60
21	12.	27	71.610	.47	1.43	1.45	148	83	68	4.	260	62
20	15.	30	3.660	.38	1.16	1.20	149	85	69	3.5	245	64
19	18.	33	5.710	.40	1.20	1.20	149	87	71	3.5	255	63
18	21.	36	7.840	.48	1.45	1.45	149	88	74	4.	250	63
17	24.	39	8.005	.42	1.28	1.30	149	89	76	4.	255	63
16	27.	42	82.010	.40	1.21	1.20	149	90	76	4.	250	64
15	30.	45	4.020	.41	1.25	1.22	148	91	77	4.	255	65
14	33.	48	5.840	.32	.97	.95	148	92	78	3.	250	66
13	36.	51	987.524	.28	.84	.86	148	91	79	3.	250	68
	.		.	.	.	.				.		
	.		.	.	.	.				.		
	.	END 0951	.	.	.	.				.		
	.		.	.	.	.				.		
	.		.	.	.	.				.		
	.		.	.	.	.				.		
	.		.	.	.	.				.		
	.		.	.	.	.				.		
	.		.	.	.	.				.		
	.		.	.	.	.				.		
	.		.	.	.	.				.		

LEAKAGE @ 15 "Hg = ~~25~~ CFM 0

GAS METER COR. 1.11

PEDCo - ENVIRONMENTAL
SUITE 8 • ATKINSON SQUARE
CINCINNATI, OHIO 45246

	PLANT & CITY	DATE	SAMPLING LOCATION	SAMPLE TYPE
1.	IMC, KINGSFORD FLA	02/13/73	ROCK DRYING OUTLET	PARTICULATE

	RUN NO.	OPERATOR	AMB. TEMP (°F)	BAR. PRESS (IN.HG)	STATIC PRESS. ($IN.H_2O$)	FILTER NUMBER(S)	STACK INSIDE DIMEN. (INCHES)	PITOT TUBE C
2.	2	O CONNER-MEER	75	30.40	-2.1	73-004	8.35	.85

	PROBE LENGTH AND TYPE	NOZZLE I. D. INCHES	H_2O (%)	SAMPLE BOX NO.	METER BOX NO.	METER ΔH @	C FACTOR	PROBE HEAT SET	BOX HEAT SET.	REF. ΔP	RECORD DATA MINS.
3.	4 FT GLASS HEATED	.277	28	A			.56	80	250	.62	3

EMISSION TESTING FIELD DATA

TRAVERSE POINT NUMBER	SAMPLING TIME, min	CLOCK TIME (24 hr CLOCK)	GAS METER READING (V_m), ft^3	VELOCITY HEAD (Δp_s), $in.H_2O$	ORIFICE PRESSURE DIFFERENTIAL (ΔH), $in.H_2O$ DESIRED	ORIFICE PRESSURE DIFFERENTIAL (ΔH), $in.H_2O$ ACTUAL	STACK TEMPERATURE (T_s), °F	DRY GAS METER TEMPERATURE INLET ($T_{m_{in}}$), °F	DRY GAS METER TEMPERATURE OUTLET ($T_{m_{out}}$), °F	PUMP VACUUM, in.Hg	SAMPLE BOX TEMPERATURE °F	IMPINGER TEMPERATURE °F
	0	0958	987.524									
A 12	39.	1001	9.975	.25	.76	.77	148	81	77	3.	235	65
11	42.	04	91.010	.43	1.30	1.30	148	85	80	5.	225	63
10	45.	07	3.350	.58	1.70	1.70	148	88	80	5.5	245	63
9	48.	10	5.980	.75	2.25	2.25	148	92	80	7.	250	63
8	51.	13	8.840	.83	2.45	2.45	148	97	82	7.5	245	64
7	54.	16	001.660	.85	2.50	2.48	148	100	82	7.5	260	68
6	57.	19	4.635	.90	2.65	2.65	148	104	84	8.5	270	73
5	60.	22	7.515	.86	2.58	2.53	148	108	85	8.	260	74
4	63.	25	10.425	.82	2.44	2.45	148	110	86	8.	255	72
3	66.	28	3.290	.78	2.30	2.30	148	111	87	8.	255	71
2	69.	31	6.010	.70	2.10	2.10	148	111	89	7.5	260	72
1	72.	34	018.439	.55	1.65	1.65	148	110	90	6.	270	74
	.		.	.	.	.				.		
	.	END 1ST HALF	.	.	.	.				.		
	.	1034	.	.	.	.				.		
	.		.	.	.	.				.		
	.		.	.	.	.				.		
	.		.	.	.	.				.		
	.		.	.	.	.				.		
	.		.	.	.	.				.		
	.		.	.	.	.				.		
	.		.	.	.	.				.		
	.		.	.	.	.				.		
	.		.	.	.	.				.		

LEAKAGE @ 15 "Hg = 0 CFM

GAS METER COR. 1.11

OVER

PEDCo - ENVIRONMENTAL
SUITE 8 • ATKINSON SQUARE
CINCINNATI, OHIO 45246

① pump acting up again - like yesterday, but smoothed out

② Changed Silica gel Impingers

[redacted] 33.816 for [illegible] per reading

	PLANT & CITY	DATE	SAMPLING LOCATION	SAMPLE TYPE
1.	IMC KINGSFORD FLA	02/13/73	ROCK DRYING OUTLET	PARTICULATE

	RUN NO.	OPERATOR	AMB. TEMP (°F)	BAR. PRESS (IN.HG)	STATIC PRESS. (IN.H_2O)	FILTER NUMBER(S)	STACK INSIDE DIMEN. (INCHES)	PITOT TUBE (
2.	2	O'CONNER-MEER	75	30.40	-.21	73-004	83.5	.83

	PROBE LENGTH AND TYPE	NOZZLE I. D. INCHES	H_2O (%)	SAMPLE BOX NO.	METER BOX NO.	METER ΔH @	C FACTOR	PROBE HEAT SET	BOX HEAT SET.	REF. ΔP	RECORD DATA MINS.
3.	4 FT. GLASS HEATED	0.277	28	A			.56	80	250	.62	3

EMISSION TESTING FIELD DATA

TRAVERSE POINT NUMBER	SAMPLING TIME, min	CLOCK TIME (24 hr CLOCK)	GAS METER READING (V_m), ft^3	VELOCITY HEAD (Δp_s), in.H_2O	ORIFICE PRESSURE DIFFERENTIAL (ΔH), in.H_2O DESIRED	ORIFICE PRESSURE DIFFERENTIAL (ΔH), in.H_2O ACTUAL	STACK TEMPERATURE (T_s), °F	DRY GAS METER TEMPERATURE INLET ($T_{m_{in}}$), °F	DRY GAS METER TEMPERATURE OUTLET ($T_{m_{out}}$), °F	PUMP VACUUM, in.Hg	SAMPLE BOX TEMPERATURE °F	IMPINGER TEMPERATURE °F
	0	1045	018.439									
B-1	75.	48	20.835	.70	2.10	2.10	148	88	84	6.	200	66
2	78.	51	3.550	.78	2.30	2.30	148	94	85	8.	200	66
3	81.	54	6.320	.78	2.30	2.30	148	99	87	8.	200	66
4	84.	* 57	029.194	.85	2.50	2.50	148	103	87	10.	220	72
5	87.	1253 1100	31.020	.87	2.58	1.0	152	79	76	5.	235	64
6	90.	1310	153.510	.90	2.70	2.70	152	80	80	13.	225	63
7	93.	13	5.070	.90	2.65	2.60	151	81	80	12.7	220	57
8	96.	16	8.480	.83	2.50	2.50	151	86	80	12.7	230	63
9	99.	19	161.290	.92	2.70	2.6	151	91	81	15.0	225	68
10	102.	22	3.950	.75	2.20	2.25	151	96	82	14.0	260	70
11	105.	25	6.090	.43	1.32	1.5	150	99	84	9.0	210	75
12	108.	28	167.928	.34	1.02	1.0	151	100	86	8.	230	73
	.	1331	.	.	.	.				.		
5 2/3	89.	1255	031.816	FINAL READING ON METER BOX #5						.		
5 2/3	89.	1309	152.172	INITAL READING ON METER BOX #3						.		

LEAKAGE @ ____ "Hg = ____ CFM

GAS METER COR. 1.11 11:00 * Process down 1255 down over

PEDCo - ENVIRONMENTAL
SUITE 8 • ATKINSON SQUARE
CINCINNATI, OHIO 45246

① - Shut down at 1057 - Plant Trouble
Gene Reilly & close process at 1100
Conveyor belt breaking up
Started again at Pt 5 at 1250

2. Started test again at 1250 - Pump acting up again and I couldnt pull the vol. needed Pump vac guage only read 5" but thats as high as I could make it go. Went thru point 35 like that hoping it would correct itsely like before, but it didnit. Brought another meter box and set it up.

③ Final reading on meter box # 5 - 031.816
Initial reading on meter box # 3 - 152.172

④ ~~350~~ Sample box thermostat set on ~~450~~ 10 (or maximum) believe it was shorting out at times.

⑤ Since meter ΔH were close 1.49 vs 1.55 I used same nomograph settings.

PLANT & CITY	DATE	SAMPLING LOCATION	SAMPLE TYPE
IMC KINGSFORD FLA.	02/13/13	ROCK DRYING OUTLET	PARTICULATE

RUN NO.	OPERATOR	AMB. TEMP (°F)	BAR. PRESS (IN.HG)	STATIC PPESS. ($IN.H_2O$)	FILTER NUMBER(S)	STACK INSIDE DIMEN. (INCHES)	PITOT TUBE C
2							

PROBE LENGTH AND TYPE	NOZZLE I. D. INCHES	H_2O (%)	SAMPLE BOX NO.	METER BOX NO.	METER Δ H @	C FACTOR	PROBE HEAT SET	BOX HEAT SET.	REF. ΔP	RECORD DATA MINS.

EMISSION TESTING FIELD DATA

TRAVERSE POINT NUMBER	SAMPLING TIME, min	CLOCK TIME (24 hr CLOCK)	GAS METER READING (V_m), ft^3	VELOCITY HEAD (Δp_s), $in.H_2O$	ORIFICE PRESSURE DIFFERENTIAL (ΔH), $in.H_2O$		STACK TEMPERATURE (T_s), °F	DRY GAS METER TEMPERATURE		PUMP VACUUM, in.Hg	SAMPLE BOX TEMPERATURE °F	IMPINGER TEMPERATURE °F
					DESIRED	ACTUAL		INLET ($T_{m_{in}}$), °F	OUTLET ($T_{m_{out}}$), °F			
	0	1335	167.928									
B-23	111.	38	4.935	.40	1.20	1.20	151	93	87	8.	240	63
23 14	114.	41	172.190	.60	1.80	1.80	151	97	87	10.	195	67
22 15	117.	44	4.535	.58	1.75	1.75	151	97	88	10.2	195	68
21 16	120.	47	6.775	.48	1.45	1.50	154	98	85	9.5	245	69
20 17	123.	50	8.725	.38	1.15	1.15	153	99	86	7.8	240	69
19 18	126.	53	180.550	.34	1.04	1.05	153	99	86	7.5	260	69
18 19	129.	56	2.285	.28	.85	.85	153	100	86	7.0	260	70
17 20	132.	59	3.975	.28	.85	.85	153	100	86	7.	275	69
16 21	135.	1402	5.470	.17	.53	.50	153	100	87	5.5	245	69
15 22	138.	05	6.560	.13	.40	.40	153	98	87	5.0	220	68
14 23	141.	08	8.075	.24	.73	.73	153	97	87	7.0	210	68
13 24	144.	1411	189.670	.24	.73	.73	153	97	87	7.0	195	68
	END OF TEST 2											
		141 HRS										

LEAKAGE @_____ °Hg = _____ CFM

GAS METER COR. 1.11 (7 8 9 10 11)

PEDCo - ENVIRONMENTAL
SUITE 8 • ATKINSON SQUARE
CINCINNATI, OHIO 45246

(1) Sample box thermostat set on max. Must be shorting out.

ANALYTICAL DATA

PLANT 14C Kingsford

DATE 2-13-73

SAMPLING LOCATION DRYER OUTLET

SAMPLE TYPE Particulate

RUN NUMBER 2-0

SAMPLE BOX NUMBER A

CLEAN-UP MAN J Geiger

COMMENTS:

481.1 − 455.2 = 25.9 Imp Tare 1-A

483.2 − 460.9 = 22.3 " " 1-B

FRONT HALF

ACETONE WASH OF NOZZLE, PROBE, CYCLONE (BYPASS), FLASK, FRONT HALF OF FILTER HOLDER

FILTER NUMBER 73-004

LABORATORY RESULTS

CONTAINER 73-002-518 _____ mg

CONTAINER 73-002-519 _____ mg

FRONT HALF SUBTOTAL _____ mg

BACK HALF

IMPINGER CONTENTS AND WATER WASH OF IMPINGERS, CONNECTORS, AND BACK HALF OF FILTER HOLDER

ACETONE WASH OF IMPINGERS, CONNECTORS, AND BACK HALF OF FILTER HOLDER

(2) CONTAINERS 73-520 _____ mg

ETHER-CHLOROFORM EXTRACTION 521 _____ mg

CONTAINER 522 _____ mg

BACK HALF SUBTOTAL _____ mg

TOTAL WEIGHT _____ mg

MOISTURE

445 ml
412 " 2.0
130 " 3.0
987

IMPINGERS

FINAL VOLUME	987.0	ml
INITIAL VOLUME	200.0	ml
NET VOLUME	787.0	ml

25.9 + 22.3 } S.G. 1
48.2

SILICA GEL

	1-A		1-B			
FINAL WEIGHT	225.9	g	222.3	g	_____	g
INITIAL WEIGHT	200.0	g	200.0	g	_____	g
NET WEIGHT	25.9	g	22.3	g	_____	g

48.2
787.0

TOTAL MOISTURE 835.2 g

PEDCo-ENVIRONMENTAL
SUITE 8 · ATKINSON SQUARE
CINCINNATI, OHIO 45246
513/771-4330

NOMOGRAPH DATA

PLANT IMC KINGSFORD FLA.

DATE 2-13-73

SAMPLING LOCATION ROCK DRYING OUTLET

~~Test 3~~ Test 2

CALIBRATED PRESSURE DIFFERENTIAL ACROSS ORIFICE, in. H_2O	$\Delta H_@$	1.49
AVERAGE METER TEMPERATURE (AMBIENT + 20°F), °F	$T_{m_{avg.}}$	110
PERCENT MOISTURE IN GAS STREAM BY VOLUME	B_{wo}	28
BAROMETRIC PRESSURE AT METER, in. Hg	P_m	30.40
STATIC PRESSURE IN STACK, in. Hg ($P_m \pm 0.073$ x STACK GAUGE PRESSURE in in. H_2O)	P_s	.014
RATIO OF STATIC PRESSURE TO METER PRESSURE	P_s/P_m	1.0
AVERAGE STACK TEMPERATURE, °F	$T_{s_{avg.}}$	151
AVERAGE VELOCITY HEAD, in. H_2O	$\Delta p_{avg.}$	.569
MAXIMUM VELOCITY HEAD, in. H_2O	$\Delta p_{max.}$	.98
C FACTOR		.56
CALCULATED NOZZLE DIAMETER, in.		.281
ACTUAL NOZZLE DIAMETER, in.		.277
REFERENCE Δp, in. H_2O		.67

Box 3

DRY MOLECULAR WEIGHT DETERMINATION

PLANT IMC - Kings ford
DATE 2-13-73
SAMPLING TIME (24-hr CLOCK)
SAMPLING LOCATION DRYER OUTLET Plant Test #2
SAMPLE TYPE (BAG, INTEGRATED, CONTINUOUS) BAG
ANALYTICAL METHOD ORSAT
AMBIENT TEMPERATURE 73°F
OPERATOR RG, NK

COMMENTS:

GAS \ RUN	1		2		3		AVERAGE NET VOLUME	MULTIPLIER	MOLECULAR WEIGHT OF STACK GAS (DRY BASIS) M_d, lb/lb-mole
	ACTUAL READING	NET	ACTUAL READING	NET	ACTUAL READING	NET			
CO_2	4.0	4.0	4.1	4.1	4.0	4.0	4.033	44/100	1.775
O_2 (NET IS ACTUAL O_2 READING MINUS ACTUAL CO_2 READING)	19.4	15.4	19.0	14.9	19.1	15.1	15.133	32/100	4.842
CO (NET IS ACTUAL CO READING MINUS ACTUAL O_2 READING)	19.4	0.0	19.0	0.0	19.1	0.0	0.000	28/100	0.000
N_2 (NET IS 100 MINUS ACTUAL CO READING)	80.6		81.0		80.9		80.833	28/100	22.633
								TOTAL	29.250

PEDCo-ENVIRONMENTAL
SUITE 8 • ATKINSON SQUARE
CINCINNATI, OHIO 45246
513/771-4330

PLANT & CITY	DATE	SAMPLING LOCATION	SAMPLE TYPE
1. E.M.C. KINGSFORD, FLA.	2/13/73	INLET - ROCK DRYER	PARTICULATE

RUN NO.	OPERATOR	AMB. TEMP (°F)	BAR. PRESS (IN.HG)	STATIC PPESS. ($IN.H_2O$)	FILTER NUMBER(S)	STACK INSIDE DIMEN. (INCHES)	PITOT TUBE C
2. 3	R GERSTLE & G PARNELL	70	30.32	+.6	73-005	7.20 x 5.65	0.85

PROBE LENGTH AND TYPE	NOZZLE I. D. INCHES	H_2O (%)	SAMPLE BOX NO.	METER BOX NO.	METER ΔH @	C FACTOR	PROBE HEAT SET	BOX HEAT SET.	REF. ΔP	RECORD DATA MINS.
3. 6' GLASS	0.180	32	1	4	1.67	0.53	80	250	3.65	2.5

PG. 1

EMISSION TESTING FIELD DATA

TRAVERSE POINT NUMBER	SAMPLING TIME, min	CLOCK TIME (24 hr CLOCK)	GAS METER READING (V_m), ft^3	VELOCITY HEAD (Δp_s), $in.H_2O$	ORIFICE PRESSURE DIFFERENTIAL (ΔH), $in.H_2O$ DESIRED	ORIFICE PRESSURE DIFFERENTIAL (ΔH), $in.H_2O$ ACTUAL	STACK TEMPERATURE (T_s), °F	DRY GAS METER TEMPERATURE INLET ($T_{m_{in}}$), °F	DRY GAS METER TEMPERATURE OUTLET ($T_{m_{out}}$), °F	PUMP VACUUM, in.Hg	SAMPLE BOX TEMPERATURE °F	IMPINGER TEMPEPATURE °F
	0	1443	581.181									
E-1	2.5		582.38	1.1	0.59	0.59	165	78	76	5	230	60
2	5.		83.69	1.6	.85	.85		78	76	5	270	60
3	7.5		84.98	1.3	.69	.69		80	76		220	62
4	10.		86.10	1.2	.64	.64		80	76		220	64
5	12.5		87.32	1.3	.69	.69		80	76		270	65
6	15.		88.51	1.4	.74	.74		81	76		230	
7	17.5		89.79	1.6	.85	.85		83	76		265	
8	20.		91.19	1.85	.97	.97		84	77		250	
9	22.5		92.57	~~1.85~~	~~1.05~~	~~1.05~~		84	78			
10	25.		94.04	2.0	1.05	1.05		84	78	6	260	
D-1	0.	1514	94.04	.0	.0	.0	164	-	-		270	66
2	27.5		95.14	0.78	.42	.42		80	78	5	260	66
3	30.		96.27	1.45	.76	.76		82	78		-	67
4	32.5		97.49	1.2	.64	.64		83	79		230	68
5	35.		98.58	1.05	.56	.56		84	79		240	70
6	37.5		99.68	1.05	.56	.56		84	79		280	72
7	40.		600.77	1.10	.58	.58		84	80		250	72
8	42.5		602.00	1.3	.69	.69		84	80			74
9	45.		3.30	1.5	.80	.80		85	80	6		
10	47.5		4.681	1.7	.90	.90		85	80	7		
C-1	50.	1542	5.40	.45	.24	.24		81	80	6	280	65
2	52.5		6.73	1.60	.85	.85		81	80	8	240	
3	55.		8.00	1.45	.76	.76		82	78	7		
4	57.5		9.27	1.30	.69	.69	V	83	79	6		

LEAKAGE @ 11 "Hg = 0 CFM

GAS METER COR. _____

PEDCo - ENVIRONMENTAL
SUITE 8 • ATKINSON SQUARE
CINCINNATI, OHIO 45246

	PLANT & CITY	DATE	SAMPLING LOCATION	SAMPLE TYPE
1.	I. M. C. KINGSFORD FLA	2/13/73	INLET - ROCK DRYER	PARTICULATE

	RUN NO.	OPERATOR	AMB. TEMP (°F)	BAR. PRESS (IN.HG)	STATIC PRESS. (IN.H_2O)	FILTER NUMBER(S)	STACK INSIDE DIMEN. (INCHES)	PITOT TUBE
2.	3	R. GERSTLE	70	30.32	+6		72 x 56.5	0.8

	PROBE LENGTH AND TYPE	NOZZLE I. D. INCHES	H_2O (%)	SAMPLE BOX NO.	METER BOX NO.	METER ΔH @	C FACTOR	PROBE HEAT SET	BOX HEAT SET.	REF. ΔP	RECORD DATA MINS.
3.	6' GLASS	0.180	32	1	4	1.67	0.53	80	250	3.65	2.5

PG. 2

EMISSION TESTING FIELD DATA

TRAVERSE POINT NUMBER	SAMPLING TIME, min	CLOCK TIME (24 hr CLOCK)	GAS METER READING (V_m), ft^3	VELOCITY HEAD (Δp_s), in.H_2O	ORIFICE PRESSURE DIFFERENTIAL (ΔH), in.H_2O DESIRED	ORIFICE PRESSURE DIFFERENTIAL (ΔH), in.H_2O ACTUAL	STACK TEMPERATURE (T_s), °F	DRY GAS METER TEMPERATURE INLET ($T_{m_{in}}$), °F	DRY GAS METER TEMPERATURE OUTLET ($T_{m_{out}}$), °F	PUMP VACUUM, in.Hg	SAMPLE BOX TEMPERATURE °F	IMPINGER TEMPERATURE °F
	0		0					84	78			
C-5	60		610.45	1.30	0.69	0.69	165	84	78	6.	250	65
6	62.5		11.68	1.30	.69	.69		84	78	7.		
7	65		13.00	1.40	.74	.74		85	76			
8	67.5		14.22	1.60	.85	.85		85	79			
9	70.0		15.70	2.00	1.05	1.05		85	79	9		
10	72.5		16.545	0.50	.27	.27		85	78	5		
B-1	75.	1615	617.02	.22	.12	.12	164	78	76	5.	210	65
2	77.5		18.42	2.00	1.05	1.05		80	78	9.	280	
3	80.		19.75	1.60	.85	.85		81	78	8.	275	
4	82.5		21.10	1.60	.85	.85		82	78	8.	260	
5	85.		22.45	1.65	.88	.88		83	78	9.	290	
6	87.5		23.81	1.65	.88	.88		83	76	9.	245	
7	90.		25.175	1.75	.93	.93		83	76	10.	280	70
8	92.5		26.57	1.70	.90	.90		84	76	10.		68
9	95.		27.60	0.85	.46	.46		83	76	7.		67
10	97.5		28.03	.18	.10	.10		82	76	5.		79
A-1	100.	1645	628.40	.12	.07	.07		80	74	5.	230	77
2	102.5		29.58	1.45	.76	.76		80	76	8.	255	72
3	105.		30.59	1.30	.69	.69		80	76	8.	290	69
4	107.5		31.79	1.30	.69	.69		81	76	8.	240	70
5	110.		32.97	1.40	.74	.74		82	76	8.	290	72
6	112.5		34.20	1.30	.69	.69		82	76	89.	235	74
7	115.		35.34	1.15	.62	.62		83	76	9.	235	
8	117.5		36.35	.85	.46	.46		83	76	7.	275	75
9	120.		36.83	.18	.10	.10		83	76	5.	240	76
10	122.5	1710	636.857	-.05	.0	.0		-	-	.	-	78
	125.0		[illegible]									

LEAKAGE @ ____ "Hg = ____ CFM

GAS METER COR. 7 8 9 10 11

PEDCo - ENVIRONMENTAL
SUITE 8 • ATKINSON SQUARE
CINCINNATI, OHIO 45246

ANALYTICAL DATA

PLANT IMC Kingsford

DATE 2-13-73

SAMPLING LOCATION DRYER INLET

SAMPLE TYPE Particulate

RUN NUMBER 3-I

SAMPLE BOX NUMBER _____

CLEAN-UP MAN J. Geiger

COMMENTS:

Impinger Tare = $\frac{466.0}{444.21\text{-F}}$ / 21.8

70 ml impinger H_2O in Front ½ filter

FRONT HALF

ACETONE WASH OF NOZZLE, PROBE, CYCLONE (BYPASS), FLASK, FRONT HALF OF FILTER HOLDER

FILTER NUMBER 73-005

LABORATORY RESULTS

CONTAINER 73-002-525 _____ mg

CONTAINER 526 _____ mg

FRONT HALF SUBTOTAL _____ mg

BACK HALF

IMPINGER CONTENTS AND WATER WASH OF IMPINGERS, CONNECTORS, AND BACK HALF OF FILTER HOLDER

ACETONE WASH OF IMPINGERS, CONNECTORS, AND BACK HALF OF FILTER HOLDER

2-CONTAINERS 527 _____ mg

ETHER-CHLOROFORM EXTRACTION 528 _____ mg

CONTAINER 529 _____ mg

BACK HALF SUBTOTAL _____ mg

TOTAL WEIGHT _____ mg

MOISTURE

IMPINGERS

FINAL VOLUME	715.0	ml
INITIAL VOLUME	200.0	ml
NET VOLUME	515.0	ml

515.0 / 21.8 / 536.8

SILICA GEL 1-F

FINAL WEIGHT	221.8 g	_____ g	_____ g
INITIAL WEIGHT	200.0 g	200.0 g	_____ g
NET WEIGHT	21.8 g	_____ g	_____ g

TOTAL MOISTURE 536.8 g

PEDCo-ENVIRONMENTAL
SUITE 8 · ATKINSON SQUARE
CINCINNATI, OHIO 45246
513/771-4330

NOMOGRAPH DATA

PLANT I.M.C. KINGSPORT

DATE 2-13-73 TEST 2 & 3

SAMPLING LOCATION [illegible]

CALIBRATED PRESSURE DIFFERENTIAL ACROSS ORIFICE, in. H_2O	$\Delta H_@$	[illegible]
AVERAGE METER TEMPERATURE (AMBIENT + 20 °F), °F	$T_{m_{avg.}}$	80
PERCENT MOISTURE IN GAS STREAM BY VOLUME	B_{wo}	[illegible]
BAROMETRIC PRESSURE AT METER, in. Hg	P_m	[illegible]
STATIC PRESSURE IN STACK, in. Hg ($P_m \pm 0.073$ x STACK GAUGE PRESSURE in in. H_2O)	P_s	[illegible]
RATIO OF STATIC PRESSURE TO METER PRESSURE	P_s/P_m	[illegible]
AVERAGE STACK TEMPERATURE, °F	$T_{s_{avg.}}$	[illegible]
AVERAGE VELOCITY HEAD, in. H_2O	$\Delta p_{avg.}$	[illegible]
MAXIMUM VELOCITY HEAD, in. H_2O	$\Delta p_{max.}$	
C FACTOR		
CALCULATED NOZZLE DIAMETER, in.		
ACTUAL NOZZLE DIAMETER, in.		[illegible]
REFERENCE Δp, in. H_2O		

DRY MOLECULAR WEIGHT DETERMINATION

PLANT IMC - Kingsford

DATE 2-13-73

SAMPLING TIME (24-hr CLOCK) 1505 - 1600

SAMPLING LOCATION INLET DRYER UNIT #3

SAMPLE TYPE (BAG, INTEGRATED, CONTINUOUS) BAG

ANALYTICAL METHOD ORSAT

AMBIENT TEMPERATURE

OPERATOR J Geiger

COMMENTS: PEDCo Bag #3

GAS \ RUN	1		2		3		AVERAGE NET VOLUME	MULTIPLIER	MOLECULAR WEIGHT OF STACK GAS (DRY BASIS) M_d, lb/lb-mole
	ACTUAL READING	NET	ACTUAL READING	NET	ACTUAL READING	NET			
CO_2	4.8	4.8	5.2	5.2	5.0	5.0		44/100	
O_2 (NET IS ACTUAL O_2 READING MINUS ACTUAL CO_2 READING)	20.6	15.8	21.0	15.8	20.5	15.5		32/100	
CO (NET IS ACTUAL CO READING MINUS ACTUAL O_2 READING)	20.6	0.0	21.2	0.2	20.5	0.0		28/100	
N_2 (NET IS 100 MINUS ACTUAL CO READING)								28/100	
								TOTAL	

PEDCo-ENVIRONMENTAL
SUITE 8 • ATKINSON SQUARE
CINCINNATI, OHIO 45246
513/771-4330

	PLANT & CITY	DATE	SAMPLING LOCATION	SAMPLE TYPE
1.	IMC KINGSFORD FLA.	02/13/73	ROCK DRYING OUTLET	PARTICULATE

	RUN NO.	OPERATOR	AMB. TEMP (°F)	BAR. PRESS (IN.HG)	STATIC PRESS. ($IN.H_2O$)	FILTER NUMBER(S)	STACK INSIDE DIMEN. (INCHES)	PITOT TUBE C
2.	3	O'CONNER - MEER	75	30.28	-1.21	73-028	8.35 X	.83

	PROBE LENGTH AND TYPE	NOZZLE I. D. INCHES	H_2O (%)	SAMPLE BOX NO.	METER BOX NO.	METER ΔH @	C FACTOR	PROBE HEAT SET	BOX HEAT SET.	REF. ΔP	RECORD DATA MINS.
3.	8 FT GLASS HEATED	0.270	28		3	1.55	.595	80 ON RHEOSTAT	.8	.59	3

4'+8' BEING USED FOR TEST

EMISSION TESTING FIELD DATA

TRAVERSE POINT NUMBER	SAMPLING TIME, min / CLOCK TIME (24 hr CLOCK)	GAS METER READING (V_m), ft^3	VELOCITY HEAD (Δp_s), $in.H_2O$	ORIFICE PRESSURE DIFFERENTIAL (ΔH), $in.H_2O$ DESIRED	ORIFICE PRESSURE DIFFERENTIAL (ΔH), $in.H_2O$ ACTUAL	STACK TEMPERATURE (T_s), °F	DRY GAS METER TEMPERATURE INLET ($T_{m_{in}}$), °F	DRY GAS METER TEMPERATURE OUTLET ($T_{m_{out}}$), °F	PUMP VACUUM, in.Hg	SAMPLE BOX TEMPERATURE °F	IMPINGER TEMPERATURE °F
	0 / 1440	190.053									
A-1	03.	2.120	.55	1.75	1.75	153	87	85	6.	250	58
2	06.	4.530	.65	2.05	2.05	153	89	85	7.5	275	58
3	09.	7.215	.70	2.25	2.25	153	92	85	10.0	275	60
4	12.	9.960	.78	2.40	2.40	153	97	85	11.0	300	68
5	15.	202.765	.82	2.58	2.55	153	101	85	11.	300	79
6	18.	5.635	.82	2.58	2.55	153	103	85	11.	250	82
7	21. / 1501	8.535	.83	2.60	2.60	153	107	86	11.5	300	82
8	24. / 04	11.375	.78	2.40	2.40	153	109	86	10.5	250	81
9	27. / 07	4.010	.65	2.05	2.05	153	109	87	8.0	260	80
10	30. / 10	6.365	.52	1.65	1.65	153	109	88	6.5	275	78
11	33. / 13	8.360	.36	1.15	1.15	153	107	89	5.0	260	77
12	36. / 1516	220.008	.22	.71	.71	153	106	89	3.5	240	74
~~13~~	.	.	.	.	.				.		
	. / END	1516 .	.	.	.				.		
	.	.	.	.	.				.		
	.	.	.	.	.				.		
	.	.	.	.	.				.		
	.	.	.	.	.				.		
	.	.	.	.	.				.		
	.	.	.	.	.				.		
	.	.	.	.	.				.		
	.	.	.	.	.				.		
	.	.	.	.	.				.		
	.	.	.	.	.				.		

LEAKAGE @ 15 "Hg = 0 CFM

GAS METER COR. 1.11

① over

PEDCo - ENVIRONMENTAL
SUITE 8 • ATKINSON SQUARE
CINCINNATI, OHIO 45246

① Cyclone (glass) by pass broke - Believed to have happened upon probe removal from stack prior to changing probes. If so, it shouldn't effect results

2 4 7

	PLANT & CITY	DATE	SAMPLING LOCATION	SAMPLE TYPE
1.	IMC, KINGSFORD FLA.	2/13/13	ROCK DRYING OUTLET	

	RUN NO.	OPERATOR	AMB. TEMP (°F)	BAR. PRESS (IN.HG)	STATIC PRESS. ($IN.H_2O$)	FILTER NUMBER(S)	STACK INSIDE DIMEN. (INCHES)	PITOT TUBE
2.	3							

	PROBE LENGTH AND TYPE	NOZZLE I. D. INCHES	H_2O (%)	SAMPLE BOX NO.	METER BOX NO.	METER ΔH @	C FACTOR	PROBE HEAT SET	BOX HEAT SET.	REF. ΔP	RECORD DATA MINS.
3.	4 FT				3						

EMISSION TESTING FIELD DATA

TRAVERSE POINT NUMBER	SAMPLING TIME, min	CLOCK TIME (24 hr CLOCK)	GAS METER READING (V_m), ft^3	VELOCITY HEAD (Δp_s), $in.H_2O$	ORIFICE PRESSURE DIFFERENTIAL (ΔH), $in.H_2O$ DESIRED	ORIFICE PRESSURE DIFFERENTIAL (ΔH), $in.H_2O$ ACTUAL	STACK TEMPERATURE (T_s), °F	DRY GAS METER TEMPERATURE INLET ($T_{m_{in}}$), °F	DRY GAS METER TEMPERATURE OUTLET ($T_{m_{out}}$), °F	PUMP VACUUM, in.Hg	SAMPLE BOX TEMPERATURE °F	IMPINGER TEMPERATURE °F
	0	1550	270.008									
A 24	39.	53	2.390	.62	1.90	1.90	151	84	83	8.	260	66
23	42.	56	4.775	.55	1.73	1.73	151	88	84	7.7	277	74
22	45.	59	7.060	.53	1.70	1.70	151	91	84	8.	275	72
21	48.	1602	9.450	.58	1.85	1.85	151	92	83	9.	255	79
20	51.	05	31.935	.58	1.85	1.85	151	94	82	9.2	225	81
19	54.	08	4.650	.55	1.73	1.75	151	95	82	8.8	225	80
18	57.	11	6.770	.54	1.71	1.71	151	96	82	8.8	230	80
17	60.	14	9.020	.48	1.55	1.55	151	97	82	8.2	280	78
16	63.	17	41.185	.42	1.35	1.35	151	97	82	7.5	300	76
15	66.	20	3.255	.35	1.12	1.15	151	97	81	7.0	300	75
14	69.	23	5.050	.28	.90	.90	151	96	81	5.7	300	75
13	72.	26	246.617	.21	.67	.67	151	95	81	4.8	310	73
	.		.	.	.	.				.		
	.		.	.	.	.				.		
	.	END	.	.	.	.				.		
	.		.	.	.	.				.		
	.	1627	.	.	.	.				.		
	.		.	.	.	.				.		
	.		.	.	.	.				.		
	.		.	.	.	.				.		
	.		.	.	.	.				.		
	.		.	.	.	.				.		
	.		.	.	.	.				.		
	.		.	.	.	.				.		

LEAKAGE @ ____ "Hg = ____ CFM

GAS METER COR. 1.11 (7 8 9 10 11)

PEDCo - ENVIRONMENTAL
SUITE B • ATKINSON SQUARE
CINCINNATI, OHIO 45246

3 of 7

PLANT & CITY	DATE	SAMPLING LOCATION	SAMPLE TYPE
IMC KINGSFORD FLA.	02/13/73	ROCK DRYING OUTLET	

RUN NO.	OPERATOR	AMB. TEMP (°F)	BAR. PRESS (IN.HG)	STATIC PRESS. ($IN.H_2O$)	FILTER NUMBER(S)	STACK INSIDE DIMEN. (INCHES)	PITOT TUBE C
3							

PROBE LENGTH AND TYPE	NOZZLE I. D. INCHES	H_2O (%)	SAMPLE BOX NO.	METER BOX NO.	METER ΔH @	C FACTOR	PROBE HEAT SET	BOX HEAT SET.	REF. ΔP	RECORD DATA MINS.
8 FT										

EMISSION TESTING FIELD DATA

TRAVERSE POINT NUMBER	SAMPLING TIME, min / CLOCK TIME (24 hr CLOCK)	GAS METER READING (V_m), ft^3	VELOCITY HEAD (Δp_s), $in.H_2O$	ORIFICE PRESSURE DIFFERENTIAL (ΔH), $in.H_2O$		STACK TEMPERATURE (T_s), °F	DRY GAS METER TEMPERATURE		PUMP VACUUM, in.Hg	SAMPLE BOX TEMPERATURE °F	IMPINGER TEMPERATURE °F
				DESIRED	ACTUAL		INLET ($T_{m_{in}}$), °F	OUTLET ($T_{m_{out}}$), °F			
	0 / 1640	246.617									
B-24	75. / 43	8.495	.44	1.40	1.40	150	83	80	8.	67	300
23	78. / 46	50.430	.30	.98	1.01	151	85	80	7.	67	325
22	81. / 49	2.095	.25	.82	.82	151	87	80	6.	67	300
21	84. / 52	3.925	.23	.74	.74	150	87	80	5.5	67	300
20	87. / 55	5.675	.32	1.05	1.05	151	90	80	7.	67	300
19	90. / 58	7.355	.31	1.0	1.0	151	91	80	7.	67	275
18	93. / 1701	9.270	.38	1.22	1.20	151	92	80	7.5	67	300
17	96. / 04	61.385	.46	1.49	1.50	153	94	81	9.8	69	290
16	99. / 07	3.580	.48	1.53	1.53	153	95	81	10.0	70	270
15	102. / 10	5.740	.42	1.35	1.35	153	96	81	9.5	74	270
14	105. / 13	7.775	.38	1.22	1.22	153	96	81	8.8	76	260
13	108. / 16	264.661	.31	1.0	1.0	151	96	81	7.8	76	280

LEAKAGE @ ____ "Hg = ____ CFM

GAS METER COR. ____

PEDCo - ENVIRONMENTAL
SUITE 8 • ATKINSON SQUARE
CINCINNATI, OHIO 45246

	PLANT & CITY	DATE	SAMPLING LOCATION	SAMPLE TYPE
1.	IMC KINGSFORD FLA	02/13/73	ROCK DRYING OUTLET	

	RUN NO.	OPERATOR	AMB. TEMP (°F)	BAR. PRESS (IN.HG)	STATIC PRESS. ($IN.H_2O$)	FILTER NUMBER(S)	STACK INSIDE DIMEN. (INCHES)	PITOT TUBE
2.	3							

	PROBE LENGTH AND TYPE	NOZZLE I. D. INCHES	H_2O (%)	SAMPLE BOX NO.	METER BOX NO.	METER ΔH @	C FACTOR	PROBE HEAT SET	BOX HEAT SET.	REF. ΔP	RECORD DATA MINS.
3.	4 FT										

EMISSION TESTING FIELD DATA

TRAVERSE POINT NUMBER	SAMPLING TIME, min	CLOCK TIME (24 hr CLOCK)	GAS METER READING (V_m), ft^3	VELOCITY HEAD (Δp_s), $in.H_2O$	ORIFICE PRESSURE DIFFERENTIAL (ΔH), $in.H_2O$ DESIRED	ORIFICE PRESSURE DIFFERENTIAL (ΔH), $in.H_2O$ ACTUAL	STACK TEMPERATURE (T_s), °F	DRY GAS METER TEMPERATURE INLET ($T_{m_{in}}$), °F	DRY GAS METER TEMPERATURE OUTLET ($T_{m_{out}}$), °F	PUMP VACUUM, in.Hg	SAMPLE BOX TEMPERATURE °F	IMPINGER TEMPERATURE °F
	0	1725	269.661									
B-12	111.	28	71.190	.20	.66	.66	153	84	79	6.	290	72
11	114.	31	3.040	.35	1.13	1.15	153	87	79	8.	300	65
10	117.	34	5.450	.38	1.21	1.20	153	92	80	10.	280	79
9	120.	37	7.850	.68	2.0	2.0	153	98	80	14.	280	77
8	123.	40	80.230	.78	2.28	2.25	153	101	80	14.5	275	75
7	126.	43	2.670	.84	2.40	2.40	153	102	80	15.5	300	80
6	129.	46	5.425	.35	2.50	2.50	153	104	81	16.	300	80
5	132.	49	8.170	.84	2.40	2.40	153	107	81	16.5	300	80
4	135.	52	90.960	.80	2.30	2.30	153	109	82	16.5	255	77
3	138.	55	3.630	.75	2.18	2.18	153	111	82	16.	280	76
2	141.	58	6.310	.72	2.10	2.10	153	112	83	16.	300	75
1	144.	1801	298.969	.72	2.10	2.10	153	113	84	16.	275	76
	.	.	.	.	.	.				.		
	.	.	.	.	.	.				.		
	END OF	.	.	.	.	.				.		
	TEST 3-	.	.	.	.	.				.		
	.	1801	.	.	.	.				.		
	.	.	.	.	.	.				.		
	.	.	.	.	.	.				.		
	.	.	.	.	.	.				.		
	.	.	.	.	.	.				.		
	.	.	.	.	.	.				.		
	.	.	1.0.0.110	.	.	.				.		

LEAKAGE @ _____ "Hg = _____ CFM

PEDCo - ENVIRONMENTAL
SUITE 8 • ATKINSON SQUARE
CINCINNATI, OHIO 45246

ANALYTICAL DATA

PLANT IMC Kingsford

DATE 2-13-73

SAMPLING LOCATION DRYER OUTLET

SAMPLE TYPE Particulate

RUN NUMBER 3-a

SAMPLE BOX NUMBER a

CLEAN-UP MAN J. Geiger

COMMENTS:

Impinger Tare = 470.6 1-D

" " = 484.5 1-E

FRONT HALF

LABORATORY RESULTS

ACETONE WASH OF NOZZLE, PROBE, CYCLONE (BYPASS), FLASK, FRONT HALF OF FILTER HOLDER — CONTAINER 72-002-530 _____ mg

FILTER NUMBER 73-028 — CONTAINER 531 _____ mg

FRONT HALF SUBTOTAL _____ mg

BACK HALF

IMPINGER CONTENTS AND WATER WASH OF IMPINGERS, CONNECTORS, AND BACK HALF OF FILTER HOLDER — CONTAINER 532 _____ mg

ETHER-CHLOROFORM EXTRACTION 533 _____ mg

ACETONE WASH OF IMPINGERS, CONNECTORS, AND BACK HALF OF FILTER HOLDER — CONTAINER 534 _____ mg

BACK HALF SUBTOTAL _____ mg

TOTAL WEIGHT _____ mg

359 - First
325 - Second
312 - Third
996 ml total

710.8
484.5
226.3

MOISTURE

IMPINGERS

FINAL VOLUME	996.0	ml
INITIAL VOLUME	200.0	ml
NET VOLUME	796.0	ml

SILICA GEL

	1-D		1-E			
FINAL WEIGHT	231.8	g	226.3	g	_____	g
INITIAL WEIGHT	200.0	g	200.0	g	_____	g
NET WEIGHT	31.8	g	26.3	g	_____	g

702.4
470.6
231.8

996.0
26.3
31.8
1054.1

TOTAL MOISTURE 1054.1 g

PEDCo-ENVIRONMENTAL
SUITE 8 • ATKINSON SQUARE
CINCINNATI, OHIO 45246
513/771-4330

NOMOGRAPH DATA

PLANT IMC KINGSFORD FCA

DATE 2-13-73

Test 3

SAMPLING LOCATION ROCK DRYING OUTLET

CALIBRATED PRESSURE DIFFERENTIAL ACROSS ORIFICE, in. H_2O Box 3	$\Delta H_@$	1.55
AVERAGE METER TEMPERATURE (AMBIENT + 20 °F), °F	$T_{m_{avg.}}$	110
PERCENT MOISTURE IN GAS STREAM BY VOLUME	B_{wo}	28
BAROMETRIC PRESSURE AT METER, in. Hg	P_m	30.40
STATIC PRESSURE IN STACK, in. Hg ($P_m \pm 0.073$ x STACK GAUGE PRESSURE in in. H_2O)	P_s	.014
RATIO OF STATIC PRESSURE TO METER PRESSURE	P_s/P_m	1
AVERAGE STACK TEMPERATURE, °F	$T_{s_{avg.}}$	151
AVERAGE VELOCITY HEAD, in. H_2O	$\Delta p_{avg.}$	.569
MAXIMUM VELOCITY HEAD, in. H_2O	$\Delta p_{max.}$	.98
C FACTOR		.58
CALCULATED NOZZLE DIAMETER, in.		.179
ACTUAL NOZZLE DIAMETER, in.		.177
REFERENCE Δp, in. H_2O		.59

DRY MOLECULAR WEIGHT DETERMINATION

PLANT IMC Kingsford
DATE 2-13-73
SAMPLING TIME (24-hr CLOCK) 17:00
SAMPLING LOCATION Outlet Dryer Part #3
SAMPLE TYPE (BAG, INTEGRATED, CONTINUOUS) _____
ANALYTICAL METHOD Orsat
AMBIENT TEMPERATURE _____
OPERATOR Norm Kuljian

COMMENTS: Pedco Bag # 8

RUN / GAS	1		2		3		AVERAGE NET VOLUME	MULTIPLIER	MOLECULAR WEIGHT OF STACK GAS (DRY BASIS) M_d, lb/lb-mole
	ACTUAL READING	NET	ACTUAL READING	NET	ACTUAL READING	NET			
CO_2	5.4	5.4	~~5.5~~	5.5	5.5	5.5		44/100	
O_2 (NET IS ACTUAL O_2 READING MINUS ACTUAL CO_2 READING)	21.0	15.6	21.0	15.5	21.0	15.5		32/100	
CO (NET IS ACTUAL CO READING MINUS ACTUAL O_2 READING)	21.0	0.0	21.1	0.1	21.0	0.0		28/100	
N_2 (NET IS 100 MINUS ACTUAL CO READING)	79.0	79.0	78.9	78.9	79.0	79.0		28/100	
								TOTAL	

PEDCo-ENVIRONMENTAL
SUITE 8 • ATKINSON SQUARE
CINCINNATI, OHIO 45246
513/771-4330

PLANT & CITY	DATE	SAMPLING LOCATION	SAMPLE TYPE
1. I.M.C. KINGSFORD FLA	2/14/73	INLET - ROCK DRYER	FLUORIDES

RUN NO.	OPERATOR	AMB. TEMP (°F)	BAR. PRESS (IN.HG)	STATIC PRESS. ($IN.H_2O$)	FILTER NUMBER(S)	STACK INSIDE DIMEN. (INCHES)	PITOT TUBE
2. 4	R. GERSTLE & G. PARNELL	70	30.32	+6	273003	66.0 x 56.5	.8

PROBE LENGTH AND TYPE	NOZZLE I. D. INCHES	H_2O (%)	SAMPLE BOX NO.	METER BOX NO.	METER ΔH @	C FACTOR	PROBE HEAT SET	BOX HEAT SET.	REF. ΔP	RECORD DATA MINS.
3. 6' GLASS	.180	32	-	4	1.67	0.53	80	-	3.65	3

EMISSION TESTING FIELD DATA Pg. 1

TRAVERSE POINT NUMBER	SAMPLING TIME, min	CLOCK TIME (24 hr CLOCK)	GAS METER READING (V_m), ft^3	VELOCITY HEAD (Δp_s), $in.H_2O$	ORIFICE PRESSURE DIFFERENTIAL (ΔH), $in.H_2O$ DESIRED	ORIFICE PRESSURE DIFFERENTIAL (ΔH), $in.H_2O$ ACTUAL	STACK TEMPERATURE (T_s), °F	DRY GAS METER TEMPERATURE INLET ($T_{m_{in}}$), °F	DRY GAS METER TEMPERATURE OUTLET ($T_{m_{out}}$), °F	PUMP VACUUM, in.Hg	SAMPLE BOX TEMPERATURE °F	IMPINGER TEMPERATURE °F
	0	9:12	636.941									
A-1	0.		636.941	-0.05	.0	.0	164	-	-	.	N.A.	66
2	3.		638.620	1.65	0.87	0.87		70	70	5.		58
3	6.		640.10	1.30	.70	.70		70	70	.		58
4	9.		641.48	1.20	.63	.63		72	70	.		58
5	12.		642.88	1.2	.63	.63		72	70	.		60
6	15.		644.15	0.98	.53	.53		74	71	.		61
7	18.		645.43	.98	.53	.53		76	72	.		63
8	21.		646.56	.74	.41	.41		76	72	.		68
9	24.		646.80	.10	.05	.05		76	70	.		60
10	0.		646.80	-.07	.0	.0		74	70	5.		
B-1	27.	9:42	647.38	.23	.12	.12		74	72	5.		60
2	30.		649.00	1.80	.95	.95		76	74	7.		
3	33.		650.70	1.7	.90	.90		80	74	7.		59
4	36.		652.28	1.5	.79	.79		80	74	6.		61
5	39.		653.84	1.5	.79	.79		80	74	6.		61
6	42.		655.41	1.55	.82	.82		80	75	.		61
7	45.		657.05	1.6	.84	.84		81	75	.		
8	48.		658.68	1.6	.84	.84		82	76	.		60
9	51.		659.75	0.65	.35	.35		82	76	5.		
10	54.		660.03	0.06	.04	.04		80	76	5.		58
C-1	57.	10:16	660.55	0.15	.09	.09		80	76	.		
2	60.		662.22	1.80	.95	.95		81	76	6.		61
3	63.		663.85	1.60	.84	.84		81	78	6.		
4	66.		665.39	1.40	.74	.74		82	78	6.		61

LEAKAGE @ 14 "Hg = .002 CFM

GAS METER COR. ___

PEDCo - ENVIRONMENTAL
SUITE 8 • ATKINSON SQUARE
CINCINNATI, OHIO 45246

PLANT & CITY	DATE	SAMPLING LOCATION	SAMPLE TYPE
1. I.M.C. KINGSFORD, FLA.	2/14/73	INLET	FLUORIDES

RUN NO.	OPERATOR	AMB. TEMP (°F)	BAR. PRESS (IN.HG)	STATIC PPESS. ($IN.H_2O$)	FILTER NUMBER(S)	STACK INSIDE DIMEN. (INCHES)	PITO TUBE
2. 4	R.G.						

PROBE LENGTH AND TYPE	NOZZLE I. D. INCHES	H_2O (%)	SAMPLE BOX NO.	METER BOX NO.	METER ΔH @	C FACTOR	PROBE HEAT SET	BOX HEAT SET.	REF. ΔP	RECORD DATA MINS.
3.	0.180									

PG 2

EMISSION TESTING FIELD DATA

TRAVERSE POINT NUMBER	SAMPLING TIME, min	CLOCK TIME (24 hr CLOCK)	GAS METER READING (V_m), ft^3	VELOCITY HEAD (Δp_s), $in.H_2O$	ORIFICE PRESSURE DIFFERENTIAL (ΔH), $in.H_2O$ DESIRED	ORIFICE PRESSURE DIFFERENTIAL (ΔH), $in.H_2O$ ACTUAL	STACK TEMPERATURE (T_s), °F	DRY GAS METER TEMPERATURE INLET ($T_{m_{in}}$), °F	DRY GAS METER TEMPERATURE OUTLET ($T_{m_{out}}$), °F	PUMP VACUUM, in.Hg	SAMPLE BOX TEMPERATURE °F	IMPINGER TEMPERATURE °F
C-5	0		666.86	1.3	0.70	.70	164	82	78	5	N.A.	61
6	72.		68.35	1.3	.73	.73		82	78	5.0		
7	75.		69.80	1.4	.73	.73		84	80	6.5		60
8	78.		71.41	1.6	.85	.85		86	80	6.5		
C-8	81.		73.36	2.4	1.34	1.34		87	80	8.		
	84.		75.32	2.5	1.3	1.3		88	80	8.		60
D-1 a]	0.	10:58	675.32 a	-0.03	.0	.0		82	80	0.		64
2	87.		76.52	0.83	.44	.44		82	80	5.		68
3	90.		78.06	1.45	.76	.76		82	80	5.5		63
4	93.		79.68	1.25	.66	.66		84	80	5.		61
5	96.		80.91	1.1	.58	.56		85	80	5.		62
6	99.		82.26	1.05	.55	.55		86	80	5.		63
7	102.		83.68	1.2	.64	.64		86	81	5.		62
8	105.		85.25	1.5	.78	.78		88	80	6.		63
9	108.		87.05	2.0	1.08	1.08		90	82	7.		63
10	111.		88.325	0.80	.43	.43		90	81	5.		70
E-1	114.	11:30	689.48	0.78	.41	.41		86	81	5.		71
2	117.	11:37 b]	91.10	1.40	.74	.74		86	82	5.5		70
3	120.		92.42	1.2	.63	.63		84	80	5.5		71
4	123.		93.88	1.2	.63	.63		84	80	5.5		71
5	126.		95.33	1.2	.63	.63		85	82	5.5		
6	129.		96.78	1.25	.67	.67		86	82	6.		
7	132.		98.29	1.3	.69	.69		86	82	6.		
8	135.		700.00	1.8	.94	.94		89	82	7.5		
9	138.		1.76	1.8	.94	.94		89	82	7.5		
10	141.	12:10	703.442	1.6	.85	.85		90	82	7.		
	150.0						169					

LEAKAGE @ ____ °Hg = ____ CFM

GAS METER COR. ____

a) Replaced first impinger since it was full of water

b) Stop for 15' so outlet can catch up - 11:45

PEDCo - ENVIRONMENTAL
SUITE 8 • ATKINSON SQUARE
CINCINNATI, OHIO 45246

PEDCo-ENVIRONMENTAL
SUITE 8 • ATKINSON SQUARE
CINCINNATI, OHIO 45246
513/771-4330

$A_{.180} = .000176\ ft^2$

$A_{.277} = .000418\ ft^2$

NOMOGRAPH DATA

PLANT I. M. C. KINGSFORD FLA

DATE 2-14-73 ♡ RUN 4 & 5

SAMPLING LOCATION INLET

CALIBRATED PRESSURE DIFFERENTIAL ACROSS ORIFICE, in. H_2O	$\Delta H_@$	1.67
AVERAGE METER TEMPERATURE (AMBIENT + 20 °F), °F	$T_{m_{avg.}}$	80
PERCENT MOISTURE IN GAS STREAM BY VOLUME	B_{wo}	32
BAROMETRIC PRESSURE AT METER, in. Hg	P_m	30.3
STATIC PRESSURE IN STACK, in. Hg ($P_m \pm 0.073$ x STACK GAUGE PRESSURE in in. H_2O)	P_s	30.7
RATIO OF STATIC PRESSURE TO METER PRESSURE	P_s/P_m	~1
AVERAGE STACK TEMPERATURE, °F	$T_{s_{avg.}}$	165
AVERAGE VELOCITY HEAD, in. H_2O	$\Delta p_{avg.}$	~1.5
MAXIMUM VELOCITY HEAD, in. H_2O	$\Delta p_{max.}$	~2.1
C FACTOR	0.53	
CALCULATED NOZZLE DIAMETER, in.	~.22	
ACTUAL NOZZLE DIAMETER, in.	0.180	
REFERENCE Δp, in. H_2O	0.365	

ANALYTICAL DATA

PLANT IMC Kingsford

DATE 2-14-73

SAMPLING LOCATION DRYER INLET

SAMPLE TYPE FLUORIDE

RUN NUMBER 1

SAMPLE BOX NUMBER _____

CLEAN-UP MAN J. Geiger

COMMENTS:

1-C 464.3
Impinger Tare = 444.8 g
19.5

Contains 5 ml
(2 cont. used)

FRONT HALF

LABORATORY RESULTS

ACETONE WASH OF NOZZLE, PROBE, CYCLONE (BYPASS), FLASK, FRONT HALF OF FILTER HOLDER — CONTAINER _____ _____ mg

FILTER NUMBER 273003 — CONTAINER _____ _____ mg

FRONT HALF SUBTOTAL _____ mg

BACK HALF

IMPINGER CONTENTS AND WATER WASH OF IMPINGERS, CONNECTORS, AND BACK HALF OF FILTER HOLDER — CONTAINER _____ _____ mg

ETHER-CHLOROFORM EXTRACTION _____ mg

ACETONE WASH OF IMPINGERS, CONNECTORS, AND BACK HALF OF FILTER HOLDER — CONTAINER _____ _____ mg

BACK HALF SUBTOTAL _____ mg

TOTAL WEIGHT _____ mg

MOISTURE

395 ml
493
88
976

IMPINGERS

FINAL VOLUME	976	ml
INITIAL VOLUME	300	ml
NET VOLUME	676	ml

SILICA GEL

FINAL WEIGHT	219.5	g	_____	g	_____ g
INITIAL WEIGHT	200.0	g	_____	g	_____ g
NET WEIGHT	19.5	g	_____	g	_____ g

1-C

676
+ 19.5
695.5

TOTAL MOISTURE 695.5 g

	PLANT & CITY	DATE	SAMPLING LOCATION	SAMPLE TYPE
1.	IMC KINGSFORD FLA	02/14/73	ROCK DRYING OUTLET	FLUORIDES

	RUN NO.	OPERATOR	AMB. TEMP (°F)	BAR. PRESS (IN.HG)	STATIC PRESS. ($IN.H_2O$)	FILTER NUMBER(S)	STACK INSIDE DIMEN. (INCHES)	PITOT TUBE C
2.	4	O'CONNOR - MEER	60	30.0	-2.1	273-002	8.35 x	.83

	PROBE LENGTH AND TYPE	NOZZLE I. D. INCHES	H_2O (%)	SAMPLE BOX NO.	METER BOX NO.	METER ΔH @	C FACTOR	PROBE HEAT SET	BOX HEAT SET.	REF. ΔP	RECORD DATA MINS.
3.	8 FT GLASS-HEATED	0.277	30	3	5	1.49	.54	80 ON RHEOSTAT	—	.64	3

4 & 8 FT USED FOR TEST

EMISSION TESTING FIELD DATA

TRAVERSE POINT NUMBER	SAMPLING TIME, min	CLOCK TIME (24 hr CLOCK)	GAS METER READING (V_m), ft^3	VELOCITY HEAD (Δp_s), $in.H_2O$	ORIFICE PRESSURE DIFFERENTIAL (ΔH), $in.H_2O$ DESIRED	ORIFICE PRESSURE DIFFERENTIAL (ΔH), $in.H_2O$ ACTUAL	STACK TEMPERATURE (T_s), °F	DRY GAS METER TEMPERATURE INLET ($T_{m_{in}}$), °F	DRY GAS METER TEMPERATURE OUTLET ($T_{m_{out}}$), °F	PUMP VACUUM, in.Hg	SAMPLE BOX TEMPERATURE °F	IMPINGER TEMPERATURE °F
	0	0910	032.477									
A 24	03.	13	5.020	.65	1.88	1.88	150	70	66	6.2		55
23	06.	16	7.490	.62	1.80	1.80	150	72	67	7.0		55
22	09.	19	40.010	.62	1.80	1.80	151	76	68	7.2		56
21	12.	22	2.750	.60	1.74	1.75	151	78	68	7.5		58
20	15.	25	4.810	.52	1.50	1.50	150	80	69	7.0		60
19	18.	28	6.940	.46	1.35	1.35	150	82	70	7.0		62
18	21.	31	9.110	.48	1.39	1.40	150	82	70	7.0		62
17	24.	34	51.370	.46	1.35	1.35	150	83	71	7.0		63
16	27.	37	3.360	.38	1.10	1.10	150	84	72	6.0		63
15	30.	40	4.925	.25	.73	.73	150	84	72	4.5		63
14	33.	43	6.490	.26	.75	.75	150	84	73	4.5		63
13	36.	0946	057.912	.20	.59	.59	150	84	74	4.0		63
	.	.	.	.	.	.				.		
	.	.	.	.	.	.				.		
	.	.	.	.	.	.				.		
	.	.	.	.	.	.				.		
	.	.	.	.	.	.				.		
	.	.	.	.	.	.				.		
	.	.	.	.	.	.				.		
	.	.	.	.	.	.				.		
	.	.	.	.	.	.				.		
	.	.	.	.	.	.				.		
	.	.	.	.	.	.				.		
	.	.	.	.	.	.				.		

LEAKAGE @ 15 "Hg = 0 CFM

GAS METER COR. 1.11

PEDCo - ENVIRONMENTAL
SUITE 8 • ATKINSON SQUARE
CINCINNATI, OHIO 45246

PLANT & CITY	DATE	SAMPLING LOCATION	SAMPLE TYPE
IMC KINGSFORD FLA	02/14/73	ROCK DRYING OUTLET	FLUORIDES

RUN NO.	OPERATOR	AMB. TEMP (°F)	BAR. PRESS (IN.HG)	STATIC PRESS. ($IN.H_2O$)	FILTER NUMBER(S)	STACK INSIDE DIMEN. (INCHES)	PITOT TUBE C
4							

PROBE LENGTH AND TYPE	NOZZLE I. D. INCHES	H_2O (%)	SAMPLE BOX NO.	METER BOX NO.	METER ΔH @	C FACTOR	PROBE HEAT SET	BOX HEAT SET.	REF. ΔP	RECORD DATA MINS.
4 FT										

EMISSION TESTING FIELD DATA

TRAVERSE POINT NUMBER	SAMPLING TIME, min / CLOCK TIME (24 hr CLOCK)	GAS METER READING (V_m), ft^3	VELOCITY HEAD (Δp_s), $in.H_2O$	ORIFICE PRESSURE DIFFERENTIAL (ΔH), $in.H_2O$		STACK TEMPERATURE (T_s), °F	DRY GAS METER TEMPERATURE		PUMP VACUUM, in.Hg	SAMPLE BOX TEMPERATURE °F	IMPINGER TEMPERATURE °F
				DESIRED	ACTUAL		INLET ($T_{m_{in}}$), °F	OUTLET ($T_{m_{out}}$), °F			
	0 / 1000	057.912									
A-12	39. / 03	9.425	.27	.78	.78	150	75	73	5.		60
11	42. / 06	61.060	.27	.78	.78	150	77	74	5.		62
10	45. / 09	2.930	.38	1.10	1.10	150	80	75	6.		62
9	48. / 12	5.105	.53	1.55	1.55	150	84	75	8.		62
8	51. / 15	7.580	.65	1.88	1.90	150	86	76	9.2		63
7	54. / 18	70.310	.78	2.22	2.20	151	89	76	10.5		65
6	57. / 21	3.140	.81	2.31	2.30	151	91	77	12.0		67
5	60. / 24	5.860	.82	2.36	2.30	151	91	77	12.0		67
4	63. / 27	8.615	.80	2.28	2.28	151	92	78	11.8		67
3	66. / 30	81.320	.75	2.13	2.13	151	92	78	11.5		68
2	69. / 33	3.930	.69	1.98	2.00	150	93	79	10.8		~~70~~ 70
1	72. / 1036	086.385	.67	1.92	1.90	150	95	80	10.0		~~70~~ 70

LEAKAGE @ ____ "Hg = ____ CFM

GAS METER COR. ____

PEDCo - ENVIRONMENTAL
SUITE 8 • ATKINSON SQUARE
CINCINNATI, OHIO 45246

① Maximum that I can pull. Something wrong with pump. Can't maintain the flow rate and psi gauge on pump only shows 12". Since we changed pumps on the meter at the motel without proper tool we may not have gotten all fitting tight. Since flow rate was close to desired rate, Continued test

② Changed Silica Gel Impinger at end of 1st port Sil. Gel. Imp. 1-G

1. PLANT & CITY	DATE	SAMPLING LOCATION	SAMPLE TYPE
	02/17/73		FLUORIDES

2. RUN NO.	OPERATOR	AMB. TEMP (°F)	BAR. PRESS (IN.HG)	STATIC PRESS. ($IN.H_2O$)	FILTER NUMBER(S)	STACK INSIDE DIMEN. (INCHES)	PITOT TUBE
4							

3. PROBE LENGTH AND TYPE	NOZZLE I. D. INCHES	H_2O (%)	SAMPLE BOX NO.	METER BOX NO.	METER ΔH @	C FACTOR	PROBE HEAT SET	BOX HEAT SET.	REF. ΔP	RECORD DATA MINS.
4FT										

EMISSION TESTING FIELD DATA

TRAVERSE POINT NUMBER	SAMPLING TIME, min	CLOCK TIME (24 hr CLOCK)	GAS METER READING (V_m), ft^3	VELOCITY HEAD (Δp_s), $in.H_2O$	ORIFICE PRESSURE DIFFERENTIAL (ΔH), $in.H_2O$		STACK TEMPERATURE (T_s), °F	DRY GAS METER TEMPERATURE		PUMP VACUUM, in.Hg	SAMPLE BOX TEMPERATURE °F	IMPINGER TEMPERATURE °F
					DESIRED	ACTUAL		INLET ($T_{m_{in}}$), °F	OUTLET ($T_{m_{out}}$), °F			
B-12	75.	59	8.150	.27	.78	.78	152	80	79	5.		65
11	78.	1102	9.805	.38	1.10	1.10	152	82	79	5.5		65
10	81.	05	92.075	.56	1.62	1.62	152	86	80	8.		62
9	84.	08	4.625	.70	2.00	2.00	152	91	80	9.		64
8	87.	11	7.370	.80	2.28	2.25	152	95	82	10.8		66
7	90.	14	100.130	.83	2.37	2.20	151	96	82	11.0		68
6	93.	17	2.875	.85	2.42	2.18	151	98	83	10.5		70
5	96.	20	5.590	.81	2.32	2.15	151	100	84	10.5		70
4	99.	23	8.310	.83	2.37	2.15	150	101	84	10.3		70
3	102.	26	11.030	.78	2.25	2.13	150	102	85	10.3		70
2	105.	29	3.670	.76	2.20	2.10	150	104	86	10.2		70
1	108.	1132	116.254	.62	1.80	1.80	150	104	87	9.0		70
	.		.	.	.	.				.		
	.		.	.	.	.				.		
	.		.	.	.	.				.		
	.		.	.	.	.				.		
	.		.	.	.	.				.		
	.		.	.	.	.				.		
	.		.	.	.	.				.		
	.		.	.	.	.				.		
	.		.	.	.	.				.		
	.		.	.	.	.				.		
	.		.	.	.	.				.		
	.		.	.	.	.				.		

LEAKAGE @ _____ "Hg = _____ CFM

GAS METER COR. _ . _ _

PEDCo - ENVIRONMENTAL
SUITE 8 • ATKINSON SQUARE
CINCINNATI, OHIO 45246

① May - See note ① on page 2

PLANT & CITY	DATE	SAMPLING LOCATION	SAMPLE TYPE
1.	02/14/73		FLUORIDES

RUN NO.	OPERATOR	AMB. TEMP (°F)	BAR. PRESS (IN.HG)	STATIC PRESS. (IN.H_2O)	FILTER NUMBER(S)	STACK INSIDE DIMEN. (INCHES)	PITOT TUBE C
2. 4							

PROBE LENGTH AND TYPE	NOZZLE I. D. INCHES	H_2O (%)	SAMPLE BOX NO.	METER BOX NO.	METER Δ H @	C FACTOR	PROBE HEAT SET	BOX HEAT SET.	REF. ΔP	RECORD DATA MINS.
3. 8 FT										

EMISSION TESTING FIELD DATA

TRAVERSE POINT NUMBER	SAMPLING TIME, min	CLOCK TIME (24 hr CLOCK)	GAS METER READING (V_m), ft^3	VELOCITY HEAD (Δp_s), in.H_2O	ORIFICE PRESSURE DIFFERENTIAL (ΔH), in.H_2O		STACK TEMPERATURE (T_s), °F	DRY GAS METER TEMPERATURE		PUMP VACUUM, in.Hg	SAMPLE BOX TEMPERATURE °F	IMPINGER TEMPERATURE °F
					DESIRED	ACTUAL		INLET ($T_{m_{in}}$), °F	OUTLET ($T_{m_{out}}$), °F			
	0	1140	116.254									
B-24	111.	43	8.470	.45	1.30	1.30	152	90	83	7.		66
23	114.	46	20.590	.45	1.30	1.30	152	92	85	7.		69
22	117.	49	2.680	.45	1.30	1.30	152	95	85	7.		67
21	120.	52	4.740	.42	1.22	1.22	150	97	86	7.		68
20	123.	55	6.850	.41	1.20	1.20	150	99	86	7.		68
19	126.	58	8.870	.40	1.15	1.15	150	100	87	7.		68
18	129.	1201	30.835	.38	1.10	1.10	150	100	88	6.8		68
17	132.	04	2.760	.36	1.05	1.05	150	100	88	6.5		68
16	135.	07	4.625	.34	.99	.99	150	101	89	6.		69
15	138.	10	6.320	.27	.78	.78	150	101	90	5.		68
14	141.	13	7.885	.23	.67	.67	149	100	90	5.		68
13	144.	1216	139.212	.16	.48	.48	149	98	90	4.		68
	.		.	.	.	.				.		
	.		.	.	.	.				.		
	.		.	.	.	.				.		
	.	END	.	.	.	.				.		
	.	OF	.	.	.	.				.		
	.	TEST	.	.	.	.				.		
	.		.	.	.	.				.		
	.	4	.	.	.	.				.		
	.		.	.	.	.				.		
	.		.	.	.	.				.		
	.		.	.	.	.				.		
	.		.	.	.	.				.		

LEAKAGE @ _____ "Hg = _____ CFM

GAS METER COR. _ _ . _ _ _

PEDCo - ENVIRONMENTAL
SUITE 8 • ATKINSON SQUARE
CINCINNATI, OHIO 45246

D- Believe pump is acting OK now but never was in the high range to find out for sure

PEDCo-ENVIRONMENTAL
SUITE 8 · ATKINSON SQUARE
CINCINNATI, OHIO 45246
513/771-4330

RUN #4

NOMOGRAPH DATA

PLANT IMC KINGSFORD FCA

DATE 2/14/73

SAMPLING LOCATION ROCK DRYER OUTLET

		RUN 4	~~RUN 5~~
CALIBRATED PRESSURE DIFFERENTIAL ACROSS ORIFICE, in. H_2O	$\Delta H_@$	1.49	
AVERAGE METER TEMPERATURE (AMBIENT + 20 °F), °F	$T_{m_{avg.}}$	110	~~95~~
PERCENT MOISTURE IN GAS STREAM BY VOLUME	B_{wo}	30	~~30~~
BAROMETRIC PRESSURE AT METER, in. Hg	P_m	30.30	
STATIC PRESSURE IN STACK, in. Hg ($P_m \pm 0.073$ x STACK GAUGE PRESSURE in in. H_2O)	P_s	.014	
RATIO OF STATIC PRESSURE TO METER PRESSURE	P_s/P_m	1	
AVERAGE STACK TEMPERATURE, °F	$T_{s_{avg.}}$	150	
AVERAGE VELOCITY HEAD, in. H_2O	$\Delta p_{avg.}$	.569	
MAXIMUM VELOCITY HEAD, in. H_2O	$\Delta p_{max.}$	.98	
C FACTOR		54	~~57~~
CALCULATED NOZZLE DIAMETER, in.		.284	~~.285~~
ACTUAL NOZZLE DIAMETER, in.		.277	~~.297~~
REFERENCE Δp, in. H_2O		.64	~~.65~~

ANALYTICAL DATA

PLANT IMC Kingsford

DATE 2-14-73

SAMPLING LOCATION DRYER OUTLET

SAMPLE TYPE FLUORIDE

RUN NUMBER 1

SAMPLE BOX NUMBER _____

CLEAN-UP MAN J. Geiger

COMMENTS:

492.1
Impinger Tare = 473.9 1-G
18.2
480.2
462.4 F-1
17.8

3 - #542 containers each

FRONT HALF

LABORATORY RESULTS

ACETONE WASH OF NOZZLE, PROBE, CYCLONE (BYPASS), FLASK, FRONT HALF OF FILTER HOLDER

CONTAINER _____ _____ mg

FILTER NUMBER 273002 _____

CONTAINER _____ _____ mg

_____ _____

_____ _____

FRONT HALF SUBTOTAL _____ mg

BACK HALF

IMPINGER CONTENTS AND WATER WASH OF IMPINGERS, CONNECTORS, AND BACK HALF OF FILTER HOLDER

CONTAINER _____ _____ mg

ETHER-CHLOROFORM EXTRACTION _____ mg

ACETONE WASH OF IMPINGERS, CONNECTORS, AND BACK HALF OF FILTER HOLDER

CONTAINER _____ _____ mg

BACK HALF SUBTOTAL _____ mg

TOTAL WEIGHT _____ mg

415
65
445
925

MOISTURE

IMPINGERS

FINAL VOLUME	925	ml
INITIAL VOLUME	[illegible]	ml
NET VOLUME	725	ml

725
18.2
17.8

SILICA GEL

FINAL WEIGHT	218.2 g	217.8 g	_____	g
INITIAL WEIGHT	[illegible] g	[illegible] g	_____	g
NET WEIGHT	18.2 g	17.8 g	_____	g

1-G

TOTAL MOISTURE 761.0 g

PLANT & CITY	DATE	SAMPLING LOCATION	SAMPLE TYPE
1. I.M.C. KINGSFORD FLA	2/14/72	INLET - ROCK DRYER	FLUORIDES

RUN NO.	OPERATOR	AMB. TEMP (°F)	BAR. PRESS (IN.HG)	STATIC PRESS. ($IN.H_2O$)	FILTER NUMBER(S)	STACK INSIDE DIMEN. (INCHES)	PITOT TUBE
2. 5	R. GERSTLE	70	30.28	+.61	273004	66 X 56.5	.85

PROBE LENGTH AND TYPE	NOZZLE I. D. INCHES	H_2O (%)	SAMPLE BOX NO.	METER BOX NO.	METER ΔH @	C FACTOR	PROBE HEAT SET	BOX HEAT SET.	REF. ΔP	RECORD DATA MINS.
3. 6' GLASS	0.180	32	—	4X	1.67	.53	80	—	3.65	3:10

EMISSION TESTING FIELD DATA

PG. 1

TRAVERSE POINT NUMBER	SAMPLING TIME, min	CLOCK TIME (24 hr CLOCK)	GAS METER READING (V_m), ft^3	VELOCITY HEAD (Δp_s), $in.H_2O$	ORIFICE PRESSURE DIFFERENTIAL (ΔH), $in.H_2O$		STACK TEMPERATURE (T_s), °F	DRY GAS METER TEMPERATURE		PUMP VACUUM, in.Hg	SAMPLE BOX TEMPERATURE °F	IMPINGER TEMPERATURE °F
					DESIRED	ACTUAL		INLET ($T_{m_{in}}$), °F	OUTLET ($T_{m_{out}}$), °F			
	0	1343	703.513									
E-1	3.		4.85	1.10	0.58	0.58		80	78	5.	N.A.	60
2	6.		6.32	1.45	.76	.76	164	80	80	5.		60
3	9.		7.80	1.30	.69	.69		82	79	5.		59
4	12.		9.21	1.25	.66	.66		82	79	5.		59
5	15.		10.62	1.25	.66	.66		82	79	5.		59
6	18.		12.05	1.30	.69	.69		82	80	5.		59
7	21.		13.56	1.40	.73	.73		84	80	5.		61
8	24.		15.16	1.65	.87	.87		86	80	5.5		61
9	27.		16.93	2.0	1.05	1.05		88	80	6.5		60
10	30.		18.780	2.25	1.20	1.20		88	80	7.0		63
D-1	0.	1416	18.780	0.0	.0	.0		88	80	0.		-
2	33.		19.045	.65	.35	.35		84	80	5.		63
3	36.		21.38	1.50	.78	.78				5.		63
4	39.		22.84	1.3	.69	.69				5.		62
5	42.		24.18	1.05	.55	.55		85	80	5.		63
6	45.		25.46	1.0	.52	.52		85	80	5.		64
7	48.		26.87	1.2	.64	.64		86	80	5.		65
8	51.		28.41	1.5	.78	.78		87	80	5.		64
9	54.		30.24	2.20	1.15	1.15		90	80	7.		65
10	57.		31.42	0.75	.40	.40		90	81	5.		
C-1	60.	1447	32.275	0.46	.25	.25		84	80	5.		
2	63.		33.85	1.60	.85	.85		86	82	6.		
3	66.		35.42	1.50	.79	.79		88	82	6.		
4	69.		36.91	1.30	.69	.69		88	82	5.		

LEAKAGE @ ____ "Hg = ____ CFM

GAS METER COR. ____

PEDCo - ENVIRONMENTAL
SUITE 8 • ATKINSON SQUARE
CINCINNATI, OHIO 45246

PLANT & CITY	DATE	SAMPLING LOCATION	SAMPLE TYPE
I.M.C. KINGSFORD, FLA.	2/19/73	INLET	FLUORIDES

RUN NO.	OPERATOR	AMB. TEMP (°F)	BAR. PRESS (IN.HG)	STATIC PRESS. ($IN.H_2O$)	FILTER NUMBER(S)	STACK INSIDE DIMEN. (INCHES)	PITOT TUBE Cp
5	R.G.	75					

PROBE LENGTH AND TYPE	NOZZLE I. D. INCHES	H_2O (%)	SAMPLE BOX NO.	METER BOX NO.	METER ΔH @	C FACTOR	PROBE HEAT SET	BOX HEAT SET.	REF. ΔP	RECORD DATA MINS.

PG. 2

EMISSION TESTING FIELD DATA

TRAVERSE POINT NUMBER	SAMPLING TIME, min / CLOCK TIME (24 hr CLOCK)	GAS METER READING (V_m), ft^3	VELOCITY HEAD (Δp_s), $in.H_2O$	ORIFICE PRESSURE DIFFERENTIAL (ΔH), $in.H_2O$ DESIRED	ORIFICE PRESSURE DIFFERENTIAL (ΔH), $in.H_2O$ ACTUAL	STACK TEMPERATURE (T_s), °F	DRY GAS METER TEMPERATURE INLET ($T_{m_{in}}$), °F	DRY GAS METER TEMPERATURE OUTLET ($T_{m_{out}}$), °F	PUMP VACUUM, in.Hg	SAMPLE BOX TEMPERATURE °F	IMPINGER TEMPERATURE °F
C-5	0	738.36	1.2	0.63	0.63	164	78	82	5.5	N.A.	66
6	75.	39.75	1.2	.63	.63						
7	78.	41.11	1.1	.58	.58						
8	81.	42.64	1.45	.76	.76		90	82	5.		65
9	84.	43.93	2.5	1.05	1.65						
10	87.	45.23	.23	.12	.12		90	82	5.2		66
B-1a)	0.	45.23	0	0	0		-	-	0.		66
B-2	90.	46.90	1.80	.95	.95		84	82	5.5		-
3	93.	48.57	1.60	.87	.87		84	82	6.		71
4	96.	50.60	1.40	.74	.74		86	82	5.5		67
5	99.	52.12	1.40	.74	.74		87	82	5.5		63
6	102.	53.15	1.50	.79	.79		88	82	5.5		66
7	105.	54.73	1.5	.79	.79		88		5.5		65
8	108.	56.34	1.65	.88	.88		89		6.		63
9	111.	58.00	1.60	.85	.85		90		6.		64
10	114.	758.495	0.10	.06	.06		88	82	5.		69
A-1	117. 1606	58.56	0.08	.04	.04		82	81	5.		66
2	120.	59.96	1.35	.71	.71		83	81	6.		74
3	123.	61.54	1.50	.79	.79		86	82	6.		62
4	126.	63.10	1.50	.79	.79		87	82	6.		59
5	129.	64.65	1.40	.74	.74		88	82	6.		60
6	132.	66.12	1.3	.69	.69		88	82	6.		63
7	135.	67.58	1.3	.69	.69				6.		64
8	138.	68.82	0.88	.47	.47				5.		65
9	141. 1633	69.49	.25	.13	.13		84	82	5.		66
10	0.	769.510	-.02	0	0				0		68
	150.										

LEAKAGE @ ____ "Hg = ____ CFM

a) Changed first impinger

GAS METER COR. 1.1

PEDCo - ENVIRONMENTAL
SUITE 8 • ATKINSON SQUARE
CINCINNATI, OHIO 45246

ANALYTICAL DATA

PLANT IMC - Kingsford

DATE 2-14-73

SAMPLING LOCATION DRYER INLET

SAMPLE TYPE FLUORIDE

RUN NUMBER 2

SAMPLE BOX NUMBER _____

CLEAN-UP MAN J. Geiger

COMMENTS:

Impinger Tare 502.3 / 484.1 / 18.2

2-Containers = 550

FRONT HALF

LABORATORY RESULTS

ACETONE WASH OF NOZZLE, PROBE, CYCLONE (BYPASS), FLASK, FRONT HALF OF FILTER HOLDER — CONTAINER _____ _____ mg

FILTER NUMBER 273004 _____ — CONTAINER _____ _____ mg

_____ _____

_____ _____

FRONT HALF SUBTOTAL _____ mg

BACK HALF

IMPINGER CONTENTS AND WATER WASH OF IMPINGERS, CONNECTORS, AND BACK HALF OF FILTER HOLDER — CONTAINER _____ _____ mg

ETHER-CHLOROFORM EXTRACTION _____ mg

ACETONE WASH OF IMPINGERS, CONNECTORS, AND BACK HALF OF FILTER HOLDER — CONTAINER _____ _____ mg

BACK HALF SUBTOTAL _____ mg

TOTAL WEIGHT _____ mg

423
+ 485
30
938

MOISTURE

IMPINGERS

FINAL VOLUME	939 ml		
INITIAL VOLUME	300 ml		
NET VOLUME	638 ml		

638
18.2

SILICA GEL

FINAL WEIGHT	218.2 g	_____ g	_____ g
INITIAL WEIGHT	200.0 g	_____ g	_____ g
NET WEIGHT	18.2 g	_____ g	_____ g

4-F

TOTAL MOISTURE 656.2 g

	PLANT & CITY	DATE	SAMPLING LOCATION	SAMPLE TYPE
1.	IMF KINGSFORD, FLA	02/14/73	ROCK DRYER OUTLET	FLUORIDES

RUN NO.	OPERATOR	AMB. TEMP (°F)	BAR. PRESS (IN.HG)	STATIC PRESS. ($IN.H_2O$)	FILTER NUMBER(S)	STACK INSIDE DIMEN. (INCHES)	PITOT TUBE C
2. 5	O'CONNOR-MEER	60	30.28	-2.1	273005 & 606	8.35	8.3

	PROBE LENGTH AND TYPE	NOZZLE I. D. INCHES	H_2O (%)	SAMPLE BOX NO.	METER BOX NO.	METER ΔH @	C FACTOR	PROBE HEAT SET	BOX HEAT SET.	REF. ΔP	RECORD DATA MINS.
3.	4 FT	0.277	30	3	#5	1.49	.52	80	—	.65	3

4 & 8' USED FOR TEST

EMISSION TESTING FIELD DATA

TRAVERSE POINT NUMBER	SAMPLING TIME, min	CLOCK TIME (24 hr CLOCK)	GAS METER READING (V_m), ft^3	VELOCITY HEAD (Δp_s), $in.H_2O$	ORIFICE PRESSURE DIFFERENTIAL (ΔH), $in.H_2O$ DESIRED	ORIFICE PRESSURE DIFFERENTIAL (ΔH), $in.H_2O$ ACTUAL	STACK TEMPERATURE (T_s), °F	DRY GAS METER TEMPERATURE INLET ($T_{m_{in}}$), °F	DRY GAS METER TEMPERATURE OUTLET ($T_{m_{out}}$), °F	PUMP VACUUM, in.Hg	SAMPLE BOX TEMPERATURE °F	IMPINGER TEMPERATURE °F
	0	1330	139.378									
A-12	03.	33	41.125	.26	.74	.74	150	78	78	2.		71
11	06.	36	2.970	.38	1.09	1.10	150	80	79	3.		64
10	09.	39	5.070	.53	1.50	1.50	150	84	79	3.		64
9	12.	42	7.575	.68	1.92	1.92	150	88	80	6.		64
8	15.	45	50.265	.80	2.20	2.20	150	93	80	7.		66
7	18.	48	3.100	.87	2.45	2.45	150	98	81	8.		66
6	21.	51	5.980	.90	2.50	2.50	150	100	82	8.		74
5	24.	54	8.870	.85	2.39	2.40	150	102	83	8.5		76
4	27.	57	61.690	.83	2.33	2.35	150	104	84	9.		76
3	30.	1400	4.425	.77	2.18	2.18	150	106	85	9.		77
2	33.	03	7.060	.70	1.99	2.00	150	106	86	8.5		78
1	36.	1406	169.439	.55	1.55	1.55	150	106	87	7.5		78

LEAKAGE @ 15 "Hg = 0 CFM

GAS METER COR. ___.___

PEDCo - ENVIRONMENTAL
SUITE 8 • ATKINSON SQUARE
CINCINNATI, OHIO 45246

	PLANT & CITY	DATE	SAMPLING LOCATION	SAMPLE TYPE
1.		02/14/73		FLUORIDES

	RUN NO.	OPERATOR	AMB. TEMP (°F)	BAR. PRESS (IN.HG)	STATIC PRESS. (IN.H_2O)	FILTER NUMBER(S)	STACK INSIDE DIMEN. (INCHES)	PITOT TUBE C
2.	5							

	PROBE LENGTH AND TYPE	NOZZLE I. D. INCHES	H_2O (%)	SAMPLE BOX NO.	METER BOX NO.	METER ΔH @	C FACTOR	PROBE HEAT SET	BOX HEAT SET.	REF. ΔP	RECORD DATA MINS.
3.	8 FT										

EMISSION TESTING FIELD DATA

TRAVERSE POINT NUMBER	SAMPLING TIME, min	CLOCK TIME (24 hr CLOCK)	GAS METER READING (V_m), ft^3	VELOCITY HEAD (Δp_s), in.H_2O	ORIFICE PRESSURE DIFFERENTIAL (ΔH), in.H_2O DESIRED	ORIFICE PRESSURE DIFFERENTIAL (ΔH), in.H_2O ACTUAL	STACK TEMPERATURE (T_s), °F	DRY GAS METER TEMPERATURE INLET ($T_{m_{in}}$), °F	DRY GAS METER TEMPERATURE OUTLET ($T_{m_{out}}$), °F	PUMP VACUUM, in.Hg	SAMPLE BOX TEMPERATURE °F	IMPINGER TEMPERATURE °F
	0	1418	169.439									
A-24	39.	21	71.870	.62	1.75	1.75	150	91	85	8.		66
23	42.	24	4.615	.60	1.71	1.70	150	94	86	8.		68
22	45.	27	6.675	.59	1.68	1.68	150	96	86	8.		70
21	48.	30	9.025	.56	1.60	1.60	150	100	87	8.		71
20	51.	33	81.300	.50	1.45	1.45	150	101	87	7.5		73
19	54.	36	3.525	.48	1.38	1.40	150	101	88	7.5		74
18	57.	39	5.680	.42	1.22	1.22	150	100	88	7.		74
17	60.	42	7.645	.35	1.00	1.00	150	101	89	6.		74
16	63.	45	9.480	.32	.93	.93	150	101	89	4.		74
15	66.	48	91.120	.25	.73	.73	150	102	90	4.		74
14	69.	51	2.610	.20	.59	.59	150	102	91	3.		74
13	72.	1454	193.868	.13	.40	.40	150	101	91	3.		74

LEAKAGE @ ____ "Hg = ____ CFM

GAS METER COR. ___ . ___ (7 8 9 10 11)

over

PEDCo - ENVIRONMENTAL
SUITE 8 • ATKINSON SQUARE
CINCINNATI, OHIO 45246

0 - Changed filter and Silica Gel Dryer
at end of this part of test Sil Gel Dryer # 2-F
& # 3-F

PLANT & CITY	DATE	SAMPLING LOCATION	SAMPLE TYPE
1	02/14/73		FLUORIDE

RUN NO.	OPERATOR	AMB. TEMP (°F)	BAR. PRESS (IN.HG)	STATIC PRESS. ($IN.H_2O$)	FILTER NUMBER(S)	STACK INSIDE DIMEN. (INCHES)	PITOT TUBE
5							

PROBE LENGTH AND TYPE	NOZZLE I. D. INCHES	H_2O (%)	SAMPLE BOX NO.	METER BOX NO.	METER Δ H @	C FACTOR	PROBE HEAT SET	BOX HEAT SET.	REF. ΔP	RECORD DATA MINS.
8 ET										

EMISSION TESTING FIELD DATA

TRAVERSE POINT NUMBER	SAMPLING TIME, min	CLOCK TIME (24 hr CLOCK)	GAS METER READING (V_m), ft^3	VELOCITY HEAD (Δp_s), $in.H_2O$	ORIFICE PRESSURE DIFFERENTIAL (ΔH), $in.H_2O$ DESIRED	ORIFICE PRESSURE DIFFERENTIAL (ΔH), $in.H_2O$ ACTUAL	STACK TEMPERATURE (T_s), °F	DRY GAS METER TEMPERATURE INLET ($T_{m_{in}}$), °F	DRY GAS METER TEMPERATURE OUTLET ($T_{m_{out}}$), °F	PUMP VACUUM, in.Hg	SAMPLE BOX TEMPERATURE °F	IMPINGER TEMPERATURE °F
	0	1505	193.868									
13-24	75.	12	5.750	.42	1.20	1.20	150	88	87	3.5		62
23	78.	15	7.770	.42	1.20	1.20	150	89	88	3.5		62
22	81.	18	9.830	.44	1.25	1.28	150	91	88	4.		65
21	84.	21	201.905	.44	1.25	1.28	150	92	88	4.		66
20	87.	24	3.930	.42	1.20	1.20	150	93	87	4.		67
19	90.	27	5.890	.40	1.16	1.16	150	94	87	4.		67
18	93.	30	7.830	.40	1.16	1.16	150	94	87	4.		68
17	96.	33	9.705	.38	1.10	1.10	150	94	87	4.		70
16	99.	36	11.540	.34	.98	.98	150	94	87	4.		70
15	102.	39	3.240	.29	.84	.84	150	96	87	3.5		70
14	105.	42	4.750	.24	.70	.70	150	97	88	3.5		70
13	108.	1545	216.341	.17	.50	.50	150	98	88	3.5		70
	.		.	.	.	.				.		
	.		.	.	.	.				.		
	.		.	.	.	.				.		
	.		.	.	.	.				.		
	.		.	.	.	.				.		
	.		.	.	.	.				.		
	.		.	.	.	.				.		
	.		.	.	.	.				.		
	.		.	.	.	.				.		
	.		.	.	.	.				.		
	.		.	.	.	.				.		
	.		.	.	.	.				.		

LEAKAGE @ ____ "Hg = ____ CFM

GAS METER COR. _1.11_

PEDCo - ENVIRONMENTAL
SUITE 8 • ATKINSON SQUARE
CINCINNATI, OHIO 45246

(1) Ritos clogged? Because of low velocities we thought something was wrong - See note (1) page 4

1. PLANT & CITY	DATE	SAMPLING LOCATION	SAMPLE TYPE
	02/14/23		FLUORIDES

2. RUN NO.	OPERATOR	AMB. TEMP (°F)	BAR. PRESS (IN.HG)	STATIC PRESS. ($IN.H_2O$)	FILTER NUMBER(S)	STACK INSIDE DIMEN. (INCHES)	PITOT TUBE C
5							

3. PROBE LENGTH AND TYPE	NOZZLE I. D. INCHES	H_2O (%)	SAMPLE BOX NO.	METER BOX NO.	METER ΔH @	C FACTOR	PROBE HEAT SET	BOX HEAT SET.	REF. ΔP	RECORD DATA MINS.
4 FT										

EMISSION TESTING FIELD DATA

TRAVERSE POINT NUMBER	SAMPLING TIME, min	CLOCK TIME (24 hr CLOCK)	GAS METER READING (V_m), ft^3	VELOCITY HEAD (Δp_s), $in.H_2O$	ORIFICE PRESSURE DIFFERENTIAL (ΔH), $in.H_2O$		STACK TEMPERATURE (T_s), °F	DRY GAS METER TEMPERATURE		PUMP VACUUM, in.Hg	SAMPLE BOX TEMPERATURE °F	IMPINGER TEMPERATURE °F
					DESIRED	ACTUAL		INLET ($T_{m_{in}}$), °F	OUTLET ($T_{m_{out}}$), °F			
	0	1555	216.341									
A-12	111.	58	7.985	.28	.80	.80	150	91	87	4.		70
11	114.	1601	20.995	.28	.80	.80	150	91	88	4.		70
10	117.	1623	2.240	.78	2.20	2.20	150	84	84	7.5		70
9	120.	26	4.670	.75	2.12	2.12	150	87	84	7.5		60
8	123.	29	7.540	.88	2.48	2.49	150	91	84	8.8		65
7	126.	32	30.630	.92	2.60	2.60	150	94	84	9.0		67
6	129.	35	3.390	.90	2.52	2.52	150	98	84	9.		69
5	132.	38	6.350	.92	2.60	2.60	150	100	84	9.5		70
4	135.	41	9.310	.88	2.48	2.48	150	103	85	9.		71
3	138.	44	42.185	.83	2.35	2.35	150	104	86	9.		71
2	141.	47	5.020	.80	2.25	2.25	150	106	86	9.		71
1	144.1	1650	247.788	.75	2.10	2.10	150	105	87	8.5		71
		END OF TESTS										

LEAKAGE @ ____ "Hg = ____ CFM

GAS METER COR. ____

PEDCo - ENVIRONMENTAL
SUITE 8 • ATKINSON SQUARE
CINCINNATI, OHIO 45246

1- Shut down at 1601- Pitot clogged up - not getting the velocity. Started again at 1620 Blew out tygon pitot lines - removed pitot from probe, cleaned it out and put it back - tried again and it worked perfectly only - when we put it back and moved to the next point it worked perfectly but after checking back to test 4 everything was exactly the same - the velocities (Gene Reilly) we thought were low were the same as test 4

PEDCo-ENVIRONMENTAL
SUITE 8 · ATKINSON SQUARE
CINCINNATI, OHIO 45246
513/771-4330

RUN # 5

NOMOGRAPH DATA

PLANT IMC KINGSFORD ECA

DATE 2/14/73

SAMPLING LOCATION ROCK DRYER OUTLET

CALIBRATED PRESSURE DIFFERENTIAL ACROSS ORIFICE, in. H_2O	$\Delta H_@$	1.49
AVERAGE METER TEMPERATURE (AMBIENT + 20 °F), °F	$T_{m\,avg.}$	95
PERCENT MOISTURE IN GAS STREAM BY VOLUME	B_{wo}	30
BAROMETRIC PRESSURE AT METER, in. Hg	P_m	30.30
STATIC PRESSURE IN STACK, in. Hg ($P_m \pm 0.073$ x STACK GAUGE PRESSURE in in. H_2O)	P_s	.014
RATIO OF STATIC PRESSURE TO METER PRESSURE	P_s/P_m	1
AVERAGE STACK TEMPERATURE, °F	$T_{s\,avg.}$	150
AVERAGE VELOCITY HEAD, in. H_2O	$\Delta p_{avg.}$	.569
MAXIMUM VELOCITY HEAD, in. H_2O	$\Delta p_{max.}$	.98
C FACTOR		52
CALCULATED NOZZLE DIAMETER, in.		.285
ACTUAL NOZZLE DIAMETER, in.		.277
REFERENCE Δp, in. H_2O		.165

ANALYTICAL DATA

PLANT IMC - Kingsford
DATE 2-14-73
SAMPLING LOCATION DRYER OUTLET
SAMPLE TYPE FLUORIDE
RUN NUMBER 2
SAMPLE BOX NUMBER
CLEAN-UP MAN J. Geiger

COMMENTS:

Impinger Tare : 460.5 2-F
" " = 443.8 3-F

2-Containers #551
2 filters used for test

FRONT HALF

LABORATORY RESULTS

ACETONE WASH OF NOZZLE, PROBE, CYCLONE (BYPASS), FLASK, FRONT HALF OF FILTER HOLDER — CONTAINER _____ _____ mg

FILTER NUMBER 273005 _____ — CONTAINER _____ _____ mg
273006 _____
_____ _____

FRONT HALF SUBTOTAL _____ mg

BACK HALF

IMPINGER CONTENTS AND WATER WASH OF IMPINGERS, CONNECTORS, AND BACK HALF OF FILTER HOLDER — CONTAINER _____ _____ mg
ETHER-CHLOROFORM EXTRACTION _____ mg

ACETONE WASH OF IMPINGERS, CONNECTORS, AND BACK HALF OF FILTER HOLDER — CONTAINER _____ _____ mg

BACK HALF SUBTOTAL _____ mg

460.8 — 483.2
443.8 — 460.5
17.0 — 22.7

TOTAL WEIGHT _____ mg

MOISTURE

IMPINGERS
FINAL VOLUME 902 ml
INITIAL VOLUME 200 ml
NET VOLUME 702 ml

365 ml
362
175
902

22.7
17.0
702

SILICA GEL

FINAL WEIGHT	217.0 g	222.7 g	_____ g
INITIAL WEIGHT	200.0 g	200.0 g	_____ g
NET WEIGHT	17.0 g	22.7 g	_____ g
	3-F	2-F	

TOTAL MOISTURE 741.7 g

PLANT & CITY	DATE	SAMPLING LOCATION	SAMPLE TYPE
IMC KINGSFORD, FLA	2/15/73	INLET - ROCK DRYER	FLUORIDES

RUN NO.	OPERATOR	AMB. TEMP (°F)	BAR. PRESS (IN.HG)	STATIC PPESS. ($IN.H_2O$)	FILTER NUMBER(S)	STACK INSIDE DIMEN. (INCHES)	PITO TUBE
6	N.K & G.P	75	30.19	+.6	273009 ; 273040	72 x 56.5	.85

PROBE LENGTH AND TYPE	NOZZLE I. D. INCHES	H_2O (%)	SAMPLE BOX NO.	METER BOX NO.	METER ΔH @	C FACTOR	PROBE HEAT SET	BOX HEAT SET.	REF. ΔP	RECORD DATA MINS.
6' GLASS HEATED	0.180	32	-	4	1.67	0.52	80	—	.365	30

EMISSION TESTING FIELD DATA

1 of 2

TRAVERSE POINT NUMBER	SAMPLING TIME, min	CLOCK TIME (24 hr CLOCK)	GAS METER READING (V_m), ft^3 END of T.P.N.	VELOCITY HEAD (Δp_s), $in.H_2O$	ORIFICE PRESSURE DIFFERENTIAL (ΔH), $in.H_2O$ DESIRED	ORIFICE PRESSURE DIFFERENTIAL (ΔH), $in.H_2O$ ACTUAL	STACK TEMPERATURE (T_s), °F	DRY GAS METER TEMPERATURE INLET ($T_{m_{in}}$), °F	DRY GAS METER TEMPERATURE OUTLET ($T_{m_{out}}$), °F	PUMP VACUUM, in.Hg	SAMPLE BOX TEMPERATURE °F	IMPINGER TEMPERATURE °F
	0	0905	769.580									
A-1	* 3.		missed	.0	.0	.0	164	80	80	5.5		69
2	6.		missed	1.75	1.60	.60		80	80	5.5		69
3	9.		776.13	1.80	.96	.96		80	80	5.0		70
4	12.	-	778.73	1.60	.85	.85		80	80	5.0		70
5	15.		779.26	1.50	.78	.78		79	78	5.0		70
6	18.	930	780.65	1.10	.59	.59		79	76	5.0		69
7	21.		781.51	0.99	.53	.53		79	75	5.0		69
8	24.		782.79	0.43	.23	.23		78	74	5.0		70
9	27.		783.10	0.25	.04	.04		77	74	5.0		67
10	30.		783.10	0.0	.0	.0	164	77	74	5.0		66
B-1	27.	950	783.10	0.0	.0	.0	164	77	74	5.0		74
2	30.		785.01	2.10	1.10	1.10		75	73	6.0		73
3	33.		786.68	1.65	.87	.87		77	73	5.0		59
4	36.		788.21	1.45	.76	.76		78	73	5.0		59
5	39.		789.68	1.30	.69	.69		79	73	5.0		58
6	42.		791.20	1.45	.76	.76		80	73	5.0		59
7	45.		792.77	1.55	.80	.80		80	73	5.0		59
8	48.		794.51	1.95	1.00	1.00		81	73	5.5		59
9	51.		795.89	1.10	.58	.58		81	73	5.0		62
10	54.		796.23	0.12	.07	.07	164	81	73	5.0		68
C-1	54.	1030	793.23	.0	.0	.0	164	75	72	8.0		—
2	57.		797.95	1.85	.97	.97	164	75	72	8.0		63
3	60.		799.47	1.45	.75	.75	164	78	73	6.5		64
4	63.		800.87	1.29	.63	.63	164	80	74	6.0		63

LEAKAGE @ 15 "Hg - 0 CFM

GAS METER COR. 1.11

* left at this point because we moved the box under shelter while running

PEDCo - ENVIRONMENTAL
SUITE 8 • ATKINSON SQUARE
CINCINNATI, OHIO 45246

1.	PLANT & CITY	DATE	SAMPLING LOCATION	SAMPLE TYPE
	IMC KINGSFORD, FLA.	2/15/73	INLET - ROCK DRIER	FLUORIDES

2.	RUN NO.	OPERATOR	AMB. TEMP (°F)	BAR. PRESS (IN.HG)	STATIC PRESS. ($IN.H_2O$)	FILTER NUMBER(S)	STACK INSIDE DIMEN. (INCHES)	PITOT TUBE C.
	6	N.K. & G.P.	75	30.19	-.4		X	.83

3.	PROBE LENGTH AND TYPE	NOZZLE I. D. INCHES	H_2O (%)	SAMPLE BOX NO.	METER BOX NO.	METER ΔH @	C FACTOR	PROBE HEAT SET	BOX HEAT SET.	REF. ΔP	RECORD DATA MINS.
	6' GLASS	0.180									

EMISSION TESTING FIELD DATA

2 of 2

TRAVERSE POINT NUMBER	SAMPLING TIME, min	CLOCK TIME (24 hr CLOCK)	GAS METER READING (V_m), ft^3	VELOCITY HEAD (Δp_s), $in.H_2O$	ORIFICE PRESSURE DIFFERENTIAL (ΔH), $in.H_2O$ DESIRED	ORIFICE PRESSURE DIFFERENTIAL (ΔH), $in.H_2O$ ACTUAL	STACK TEMPERATURE (T_s), °F	DRY GAS METER TEMPERATURE INLET ($T_{m_{in}}$), °F	DRY GAS METER TEMPERATURE OUTLET ($T_{m_{out}}$), °F	PUMP VACUUM, in.Hg	SAMPLE BOX TEMPERATURE °F	IMPINGER TEMPERATURE °F
E-3	66.		802.24	1.15	.61	.61						
6	69.		803.63	1.20	.63	.63		80	74	6.0		62
7	72.		805.10	1.35	.71	.71		81	74	6.5		61
8	75.		806.38	1.80	.93	.93		83	75	6.5		64
9	78.		808.23	1.30	.67	.67		75	74	.		70
10	78.		808.23	.0	.0	.0		75	74	5.0		65
D-1	78.	1110	808.23	.0	.0	.0		75	74	5.0		65
2	81.		809.59	.91	.49	.49		75	74	5.0		65
3	84.		811.10	1.50	.79	.79		77	75	5.5		64
4	87.		812.54	1.30	.69	.69		79	75	5.0		64
5	90.		813.93	1.15	.62	.62		80	75	5.0		65
6	93.		815.20	1.00	.53	.53		80	75	5.0		65
7	96.		816.60	1.20	.63	.63		80	75	5.0		64
8	99.		818.11	1.45	.75	.75		80	75	5.0		64
9	102.		819.90	2.15	1.13	1.13		81	75	6.5		65
10	105.	1140	821.62	1.85	0.96	0.96		82	75	6.5		64
E-1	105.	1150	821.62	.0	.0	.0		75	74	.		65
★2	108.	1158	822.78	1.50	.78	.78		75	74	5.0		64
3	111.		824.22	1.25	.66	.66		76	74	5.0		63
4	114.		825.64	1.25	.66	.66		77	74	5.0		63
5	117.		827.10	1.30	.69	.69		78	74	5.0		64
6	120.		828.57	1.35	.71	.71		80	74	5.0		64
7	123.		830.20	1.50	.88	.88		80	75	5.0		63
8	126.		831.91	1.80	.93	.93		81	75	5.0		64
9	129.		833.78	2.20	1.14	1.14		82	75	6.5		63
10	132.	1225	835.517	2.00	1.05	1.05		83	75	6.5		65

LEAKAGE @ 15 "Hg = 0 CFM

GAS METER COR. .

★ had to change filters. We let the nozzle going in, pulled 30" of Hg, and backed the train up. After replacing filter, Everything was okay!

PEDCo - ENVIRONMENTAL
SUITE 8 • ATKINSON SQUARE
CINCINNATI, OHIO 45246

PEDCo-ENVIRONMENTAL
SUITE 8 · ATKINSON SQUARE
CINCINNATI, OHIO 45246
513/771-4330

NOMOGRAPH DATA

PLANT IMC Rock Drying

DATE 2-15-73

SAMPLING LOCATION Inlet

CALIBRATED PRESSURE DIFFERENTIAL ACROSS ORIFICE, in. H_2O	$\Delta H_@$	1.67
AVERAGE METER TEMPERATURE (AMBIENT + 20 °F), °F	$T_{m_{avg.}}$	90
PERCENT MOISTURE IN GAS STREAM BY VOLUME	B_{wo}	32
BAROMETRIC PRESSURE AT METER, in. Hg	P_m	30.19
STATIC PRESSURE IN STACK, in. Hg ($P_m \pm 0.073$ x STACK GAUGE PRESSURE in in. H_2O)	P_s	
RATIO OF STATIC PRESSURE TO METER PRESSURE	P_s/P_m	≈ 1
AVERAGE STACK TEMPERATURE, °F	$T_{s_{avg.}}$	165° F
AVERAGE VELOCITY HEAD, in. H_2O	$\Delta p_{avg.}$	
MAXIMUM VELOCITY HEAD, in. H_2O	$\Delta p_{max.}$	
C FACTOR		0.52
CALCULATED NOZZLE DIAMETER, in.		
ACTUAL NOZZLE DIAMETER, in.		.180
REFERENCE Δp, in. H_2O		.365

ANALYTICAL DATA

PLANT IMC Kingsford
DATE 2-15-73
SAMPLING LOCATION DRYER INLET
SAMPLE TYPE FLUORIDE
RUN NUMBER 3
SAMPLE BOX NUMBER
CLEAN-UP MAN J. Gaiser

COMMENTS:

Imp. Temp. 444.7 g 7 F

Contain. # 559

FRONT HALF

ACETONE WASH OF NOZZLE, PROBE, CYCLONE (BYPASS), FLASK, FRONT HALF OF FILTER HOLDER

FILTER NUMBER 273009
273040

LABORATORY RESULTS

CONTAINER _____ _____ mg

CONTAINER _____ _____ mg

FRONT HALF SUBTOTAL _____ mg

BACK HALF

IMPINGER CONTENTS AND WATER WASH OF IMPINGERS, CONNECTORS, AND BACK HALF OF FILTER HOLDER

ACETONE WASH OF IMPINGERS, CONNECTORS, AND BACK HALF OF FILTER HOLDER

468.5
444.7
23.8

CONTAINER _____ _____ mg
ETHER-CHLOROFORM EXTRACTION _____ mg
CONTAINER _____ _____ mg

BACK HALF SUBTOTAL _____ mg

TOTAL WEIGHT _____ mg

MOISTURE

IMPINGERS
FINAL VOLUME 877 ml
INITIAL VOLUME 300 ml
NET VOLUME 577 ml

95
422
+ 360
877

577
23.8

SILICA GEL
FINAL WEIGHT 223.8 g _____ g _____ g
INITIAL WEIGHT 200.0 g _____ g _____ g
NET WEIGHT 23.8 g _____ g _____ g
7.2

TOTAL MOISTURE 600.8 g

① Noticed condensation ~~on~~ in filter holder
Only ice in sample box to start - no water

1.	PLANT & CITY	DATE	SAMPLING LOCATION	SAMPLE TYPE
		02/15/73		FLUORIDES

2.	RUN NO.	OPERATOR	AMB. TEMP (°F)	BAR. PRESS (IN.HG)	STATIC PRESS. ($IN.H_2O$)	FILTER NUMBER(S)	STACK INSIDE DIMEN. (INCHES)	PITOT TUBE C
	6				-.21			

3.	PROBE LENGTH AND TYPE	NOZZLE I. D. INCHES	H_2O (%)	SAMPLE BOX NO.	METER BOX NO.	METER ΔH @	C FACTOR	PROBE HEAT SET	BOX HEAT SET.	REF. ΔP	RECORD DATA MINS.
	4FT										

EMISSION TESTING FIELD DATA

TRAVERSE POINT NUMBER	SAMPLING TIME, min	CLOCK TIME (24 hr CLOCK)	GAS METER READING (V_m), ft^3	VELOCITY HEAD (Δp_s), $in.H_2O$	ORIFICE PRESSURE DIFFERENTIAL (ΔH), $in.H_2O$		STACK TEMPERATURE (T_s), °F	DRY GAS METER TEMPERATURE		PUMP VACUUM, in.Hg	SAMPLE BOX TEMPERATURE °F	IMPINGER TEMPERATURE °F
					DESIRED	ACTUAL		INLET ($T_{m_{in}}$), °F	OUTLET ($T_{m_{out}}$), °F			
	0	0935	273.178									
A-12	39.	38	4.785	.28	.79	.79	150	76	75	5.5		58
11	42.	41	6.635	.39	1.10	1.10	150	78	76	7.		56
10	45.	44	8.975	.53	1.49	1.49	150	82	76	9.		55
9	48.	47	81.340	.68	1.88	1.88	150	87	76	10.		57
8	51.	50	4.065	.80	2.20	2.20	150	91	77	11.		58
7	54.	53	6.890	.85	2.37	2.37	150	95	77	12.		58
6	57.	56	9.760	.88	2.40	2.40	150	97	78	12.5		58
5	60.	59	92.550	.84	2.30	2.30	150	99	79	12.3		58
4	63.	1002	5.330	.82	2.25	2.25	150	100	80	12.5		58
3	66.	05	8.055	.75	2.10	2.10	150	101	80	12.8		58
2	69.	08	300.710	.70	1.91	1.91	150	102	81	12.0		60
1	72.	1011	303.043	.60	1.68	1.68	150	102	82	10.5		60
	.		.	.	.	.				.		
	.		.	.	.	.				.		
	.		.	.	.	.				.		
	.		.	.	.	.				.		
	.		.	.	.	.				.		
	.		.	.	.	.				.		
	.		.	.	.	.				.		
	.		.	.	.	.				.		
	.		.	.	.	.				.		
	.		.	.	.	.				.		
	.		.	.	.	.				.		
	.		.	.	.	.				.		

LEAKAGE @ _____ "Hg = _____ CFM

GAS METER COR. _____

PEDCo - ENVIRONMENTAL
SUITE 8 • ATKINSON SQUARE
CINCINNATI, OHIO 45246

4 of 7

	PLANT & CITY	DATE	SAMPLING LOCATION	SAMPLE TYPE
1.		02/15/73		FLUORIDES

	RUN NO.	OPERATOR	AMB. TEMP (°F)	BAR. PRESS (IN.HG)	STATIC PRESS. ($IN.H_2O$)	FILTER NUMBER(S)	STACK INSIDE DIMEN. (INCHES)	PITOT TUBE C.
2.	6							

	PROBE LENGTH AND TYPE	NOZZLE I. D. INCHES	H_2O (%)	SAMPLE BOX NO.	METER BOX NO.	METER Δ H @	C FACTOR	PROBE HEAT SET	BOX HEAT SET.	REF. ΔP	RECORD DATA MINS.
3.	8 FT										

EMISSION TESTING FIELD DATA

TRAVERSE POINT NUMBER	SAMPLING TIME, min	CLOCK TIME (24 hr CLOCK)	GAS METER READING (V_m), ft^3	VELOCITY HEAD (Δp_s), $in.H_2O$	ORIFICE PRESSURE DIFFERENTIAL (ΔH), $in.H_2O$ DESIRED	ORIFICE PRESSURE DIFFERENTIAL (ΔH), $in.H_2O$ ACTUAL	STACK TEMPERATURE (T_s), °F	DRY GAS METER TEMPERATURE INLET ($T_{m_{in}}$), °F	DRY GAS METER TEMPERATURE OUTLET ($T_{m_{out}}$), °F	PUMP VACUUM, in.Hg	SAMPLE BOX TEMPERATURE °F	IMPINGER TEMPERATURE °F
	0	1114	334.208									
B-24	111.	14	6.390	.45	1.25	1.25	150	83	81	5.5		58
23	114.	17	8.545	.47	1.30	1.30	150	85	82	6.		58
22	117.	20	0.685	.45	1.25	1.25	150	86	82	6.		59
21	120.	23	42.800	.42	1.18	1.18	150	88	81	6.		60
20	123.	26	4.870	.44	1.23	1.23	150	90	81	6.		63
19	126.	29	6.935	.42	1.18	1.18	150	92	82	6.		62
18	129.	32	8.870	.38	1.06	1.06	150	92	82	5.5		62
17	132.	35	50.810	.36	1.01	1.01	154	92	82	5.		62
16	135.	38	2.590	.34	.96	.96	154	94	83	5.		62
15	138.	41	4.285	.29	.82	.82	154	95	84	5.		62
14	141.	44	5.845	.23	.64	.64	154	94	85	4.5		62
13	144.	1147	357.159	.16	.46	.46	154	93	85	4.		62
	.		.	.	.	.				.		
	.		.	.	.	.				.		
	.		.	.	.	.				.		
	.		.	.	.	.				.		
	.	END OF	.	.	.	.				.		
	.	TEST 6	.	.	.	.				.		
	.		.	.	.	.				.		
	.		.	.	.	.				.		
	.		.	.	.	.				.		
	.		.	.	.	.				.		
	.		.	.	.	.				.		
	.		.	.	.	.				.		

(1) OVER

LEAKAGE @ ____ "Hg = ____ CFM

GAS METER COR. ___.___

PEDCo - ENVIRONMENTAL
SUITE 8 • ATKINSON SQUARE
CINCINNATI, OHIO 45246

① Same flows as runs 4 + 5 yesterday - so runs 4 + 5 were OK - just a normal condition - There was nothing wrong with pets or lines

PEDCo-ENVIRONMENTAL
SUITE 8 • ATKINSON SQUARE
CINCINNATI, OHIO 45246
513/771-4330

NOMOGRAPH DATA

PLANT IMC KINGSFORD FCA

DATE 02/15/73

SAMPLING LOCATION Rock Drying Cutter Run #6

CALIBRATED PRESSURE DIFFERENTIAL ACROSS ORIFICE, in. H_2O	$\Delta H_@$	1.49
AVERAGE METER TEMPERATURE (AMBIENT + 20°F), °F	$T_{m_{avg.}}$	95
PERCENT MOISTURE IN GAS STREAM BY VOLUME	B_{wo}	30
BAROMETRIC PRESSURE AT METER, in. Hg	P_m	30.19
STATIC PRESSURE IN STACK, in. Hg ($P_m \pm 0.073$ x STACK GAUGE PRESSURE in in. H_2O)	P_s	.014
RATIO OF STATIC PRESSURE TO METER PRESSURE	P_s/P_m	1
AVERAGE STACK TEMPERATURE, °F	$T_{s_{avg.}}$	150
AVERAGE VELOCITY HEAD, in. H_2O	$\Delta p_{avg.}$	.569
MAXIMUM VELOCITY HEAD, in. H_2O	$\Delta p_{max.}$	.93
C FACTOR		51
CALCULATED NOZZLE DIAMETER, in.		.289
ACTUAL NOZZLE DIAMETER, in.		.277
REFERENCE Δp, in. H_2O		.66

ANALYTICAL DATA

PLANT IMC - Kingsford

DATE 2-15-73

SAMPLING LOCATION DRYER OUTLET

SAMPLE TYPE FLUORIDE

RUN NUMBER 3

SAMPLE BOX NUMBER

CLEAN-UP MAN J. Geiger

COMMENTS:

Impinger Tare = 473.4 5F
" " 462.6 6F

S-73-[illegible]-560

FRONT HALF

LABORATORY RESULTS

ACETONE WASH OF NOZZLE, PROBE, CYCLONE (BYPASS), FLASK, FRONT HALF OF FILTER HOLDER — CONTAINER _____ _____ mg

FILTER NUMBER 273007 _____ — CONTAINER _____ _____ mg
273008 _____
_____ _____

FRONT HALF SUBTOTAL _____ mg

BACK HALF

IMPINGER CONTENTS AND WATER WASH OF IMPINGERS, CONNECTORS, AND BACK HALF OF FILTER HOLDER — CONTAINER _____ _____ mg

ETHER-CHLOROFORM EXTRACTION _____ mg

ACETONE WASH OF IMPINGERS, CONNECTORS, AND BACK HALF OF FILTER HOLDER — CONTAINER _____ _____ mg

500.3 − 478.4 = 175
473.4 − 462.6 = 415
26.9 15.8 435
1025

BACK HALF SUBTOTAL _____ mg

TOTAL WEIGHT _____ mg

MOISTURE

IMPINGERS

FINAL VOLUME	1025	ml
INITIAL VOLUME	200	ml
NET VOLUME	[illegible]	ml

SILICA GEL

FINAL WEIGHT	236.9	g	215.8	g			g
INITIAL WEIGHT	200.0	g	200.0	g			g
NET WEIGHT	36.9	g	15.8	g			g
	5-F		6-F				

TOTAL MOISTURE 867.7 g

PEDCo-ENVIRONMENTAL
SUITE 8 · ATKINSON SQUARE
CINCINNATI, OHIO 45246
513/771-4330

NOMOGRAPH DATA

PLANT IMC KINGSFORD FCA

DATE 2/14/73

SAMPLING LOCATION ROCK DRYER OUTLET

RUN #6

CALIBRATED PRESSURE DIFFERENTIAL ACROSS ORIFICE, in. H_2O	$\Delta H_@$	1.49
AVERAGE METER TEMPERATURE (AMBIENT + 20 °F), °F	$T_{m\,avg.}$	90
PERCENT MOISTURE IN GAS STREAM BY VOLUME	B_{wo}	
BAROMETRIC PRESSURE AT METER, in. Hg	P_m	
STATIC PRESSURE IN STACK, in. Hg ($P_m \pm 0.073$ x STACK GAUGE PRESSURE in in. H_2O)	P_s	.014
RATIO OF STATIC PRESSURE TO METER PRESSURE	P_s/P_m	1
AVERAGE STACK TEMPERATURE, °F	$T_{s\,avg.}$	150
AVERAGE VELOCITY HEAD, in. H_2O	$\Delta p_{avg.}$	.569
MAXIMUM VELOCITY HEAD, in. H_2O	$\Delta p_{max.}$	.98
C FACTOR		
CALCULATED NOZZLE DIAMETER, in.		
ACTUAL NOZZLE DIAMETER, in.		.277
REFERENCE Δp, in. H_2O		

COMPUTER PRINTOUT DATA

FIELD DATA

PLANT	I.M.C. KINGSFORD, FLA.	DATE	02/12/73
SAMPLING LOCATION	INLET-ROCK DRYER	RUN NUMBER	1
SAMPLE TYPE	PARTICULATE	PROBE LENGTH AND TYPE	6FT GLASS HEATED
OPERATOR	R.GERSTLE,G.PARNELL	NOZZLE I.D.	.1500
AMBIENT TEMP.(DEG.F)	65	ASSUMED MOISTURE	32
BAR.PRESS.(IN.HG)	30.41	SAMPLE BOX NUMBER	
STATIC PRESS(IN.H2O)	6.00	METER BOX NUMBER	4
FILTER NUMBER(S)	73-025	METER HEAD DIFF.	1.67
STACK INSIDE DIM(IN)	72.000 X 56.500	C FACTOR	0.53
PITOT TUBE COEFF	.83	PROBE HEATER SETTING	80
		HEATER BOX SETTING	250
READ AND RECORD DATA EVERY 2.0 MINUTES		REFERENCE PRESS DIFF.	3.65

TRAVERSE POINT NO.	SAMPLE TIME (MIN.)	CLOCK TIME (24-HR CLOCK)	GAS METER READING (CU.FT.)	VELOCITY HEAD (IN.H2O)	ORIFICE PRESSURE DIFFERENTIAL (IN.H2O) DESIRED	ORIFICE PRESSURE DIFFERENTIAL (IN.H2O) ACTUAL	STACK TEMP (DEG.F)	DRY GAS METER TEMP (DEG.F) INLET	DRY GAS METER TEMP (DEG.F) OUTLET	PUMP VACUUM (IN.HG)	SAMPLE BOX TEMP (DEG.F)	IMPINGER TEMP (DEG.F)
INIT	0	1441	481.558									
E-1	2.0			.280	.16	.16	164	68	68	5.0	248	61
E-2	4.0		483.200	1.750	.93	.93	164	68	68	5.0	248	61
E-3	6.0		484.260	1.400	.75	.75	164	68	68	5.0	255	59
E-4	8.0		485.200	1.200	.64	.64	164	70	66	5.0	250	58
E-5	10.0		486.000	1.200	.64	.64	164	70	66	5.0	240	58
E-6	12.0		486.960	1.250	.67	.67	164	70	66	5.0	240	58
E-7	14.0		487.900	1.250	.67	.67	164	70	66	5.0	260	58
E-8	16.0		488.350	1.500	.81	.81	164	71	67	5.0	260	58
E-9	18.0		490.100	1.750	.93	.93	164	74	68	5.0	260	56
E-10	20.0		491.240	1.800	.95	.95	164	76	68	5.0	260	59
D-1	22.0	1507	491.240	.000	.00	.00	164			5.0	260	63
D-2	24.0		492.100	.950	.51	.51	164	72	68	5.0	255	64
D-3	26.0		493.200	1.600	.85	.85	164	72	68	5.0	255	65
D-4	28.0		494.150	1.250	.67	.67	164	74	68	5.0	235	65
D-5	30.0		494.960	.910	.49	.49	164	75	70	5.0	235	65
D-6	32.0		495.140	.850	.46	.46	164	75	70	5.0	230	66
D-7	34.0		496.570	.960	.51	.51	164	76	70	5.0	245	68
D-8	36.0		497.520	1.250	.67	.67	164	76	70	5.0	245	68
D-9	38.0		498.760	1.650.	.88	.88	164	80	70	5.0	245	66
D-10	40.0		499.450	.750	.40	.40	164	80	70	5.0	245	66
C-1	42.0	1530	499.752	.170	.09	.09	164	72	70	5.0	245	67
C-2	44.0		500.800	1.800	.95	.95	164	78	70	5.0	250	61
C-3	46.0		501.850	1.500	.79	.79	164	78	70	5.0	250	59
C-4	48.0		502.850	1.300	.70	.70	164	79	70	5.0	220	59
C-5	50.0		503.800	1.150	.62	.62	164	80	70	5.0	230	59
C-6	52.0		504.640	1.000	.53	.53	164	80	70	5.0	230	59
C-7	54.0		505.610	1.200	.64	.64	165	80	70	5.0	250	59

PLANT: I.M.C. KINGSFORD, FLA.
SAMPLING LOCATION: INLET-ROCK DRYER
DATE: 02/12/73
RUN NUMBER: 1

TRAVERSE POINT NO.	SAMPLE TIME (MIN.)	CLOCK TIME (24-HR CLOCK)	GAS METER READING (CU.FT.)	VELOCITY HEAD (IN.H2O)	ORIFICE PRESSURE DIFFERENTIAL (IN.H2O) DESIRED	ORIFICE PRESSURE DIFFERENTIAL (IN.H2O) ACTUAL	STACK TEMP (DEG.F)	DRY GAS METER TEMP (DEG.F) INLET	DRY GAS METER TEMP (DEG.F) OUTLET	PUMP VACUUM (IN.HG)	SAMPLE BOX TEMP (DEG.F)	IMPINGER TEMP (DEG.F)
C-8	56.0		506.630	1.450	.77	.77	165	80	70	5.0	235	60
C-9	58.0		507.740	1.800	.95	.95	165	80	70	5.0	245	60
C-10	60.0		508.225	.220	.12	.12	165	80	70	5.0	245	60
B-1	62.0	1601	508.235	.000	.00	.00	165			5.0	220	61
B-2	64.0		509.360	2.050	1.10	1.10	164	74	70	5.0	220	59
B-3	66.0		510.480	1.650	.88	.88	164	74	70	5.0	220	59
B-4	68.0		511.420	1.500	.79	.79	164	76	70	5.0	220	58
B-5	70.0		512.450	1.450	.76	.76	164	76	70	5.0	220	58
B-6	72.0		513.460	1.400	.75	.75	164	78	70	5.0	245	58
B-7	74.0		514.450	1.400	.75	.75	164	78	70	5.0	245	58
B-8	76.0		515.000	1.450	.79	.79	164	80	70	5.0	245	60
B-9	78.0		516.520	1.300	.70	.70	164	80	70	5.0	230	60
B-10	80.0		517.055	.300	.16	.16	164	80	70	5.0	230	62
A-1	82.0	1626	517.055	-.100	.00	.00	164			5.0	250	62
A-2	84.0		518.030	1.600	.86	.86	164	74	70	5.0	250	62
A-3	86.0		519.100	1.500	.78	.78	165	76	70	5.0	220	62
A-4	88.0		520.110	1.450	.77	.77	165	78	70	5.0	220	60
A-5	90.0		521.120	1.400	.74	.74	165	80	70	5.0	250	60
A-6	92.0		522.200	1.300	.70	.70	165	80	70	5.0	250	62
A-7	94.0		523.020	1.100	.58	.58	165	80	70	5.0	250	62
A-8	96.0		523.720	.650	.36	.36	165	80	70	5.0	250	62
A-9	98.0		524.070	.260	.14	.14	165	76	70	5.0	255	62
A-10	100.0	1645	524.150	.050	.00	.00	165	76	70	5.0	255	62
TOTALS	100.0		42.592									
AVERAGE					.61	.61	164	76	69	5.0	243	61

PLANT	I.M.C. KINGSFORD, FLA.	DATE	02/12/73
SAMPLING LOCATION	INLET-ROCK DRYER	RUN NUMBER	1

DRY MOLECULAR WEIGHT DETERMINATION

GAS	VOL. PERCENT DRY BASIS
CO2	2.930
O2	17.930
CO	.000
N2	79.140
TOTAL	100.000
DRY MOLECULAR WEIGHT,LB/LB-MOLE	29.19

MOISTURE CONTENT DETERMINATION

IMPINGER MOISTURE,ML	400.0
SILICA MOISTURE,ML	10.5
TOTAL MOISTURE,ML	410.5
WATER VAPOR COLLECTED, STD. CU. FT.	19.458
GAS METER VOL.,CU.FT.	
GROSS TOTAL	42.592
LESS LEAKAGE CORR	.000
NET TOTAL	42.592
DRY GAS VOL. THROUGH METER,STD. CU. FT	43.182
MOISTURE CONTENT, VOL. FRACTION	.3106

STACK GAS VELOCITY AND VOLUME DETERMINATION

STACK AREA,SQ. FT.	28.293
PITOT TUBE COEFFICIENT	.83
STACK ABS.PRESS.,IN.HG	30.65
STACK GAS TEMPERATURE,DEG.F	164
STACK GAS MOL. WT.,WET BASIS	25.71
SQRT(VEL HD X STACK TEMP ABS)	24.9
STACK GAS VELOCITY, ACT. FPS	62.7
STACK GAS VOLUME,STD CFM,	
WET BASIS	93086.3
DRY BASIS	64172.2

ISOKINETIC VARIATION

PERCENT OF ISOKINETIC SAMPLING	107.5

EMISSION DATA

SAMPLE	PROBE,CYCLONE FILTER	TOTAL
WEIGHT,MG	3170.0000	3315.0000
STD CONC,GR/SCF	1.13290	1.18472
ACT CONC,GR/ACF	.68398	.71527
EMISSION RATE,LB/HR	623.150	651.654
THROUGHPUT, TON/HR	270.0000	
EMISSION FACTOR,LB/TON	2.307	2.413

FIELD DATA

PLANT	I.M.C. KINGSFORD, FLA.	DATE	02/12/73
SAMPLING LOCATION	ROCK DRYING-OUTLET	RUN NUMBER	1
SAMPLE TYPE	PARTICULATE	PROBE LENGTH AND TYPE	8FT GLASS HEATED
OPERATOR	O'CONNOR - MEER	NOZZLE I.D.	.2770
AMBIENT TEMP.(DEG.F)	65	ASSUMED MOISTURE	22
BAR.PRESS.(IN.HG)	30.41	SAMPLE BOX NUMBER	A
STATIC PRESS(IN.H2O)	-.21	METER BOX NUMBER	5
FILTER NUMBER(S)	73-002	METER HEAD DIFF.	1.49
STACK INSIDE DIM(IN)	83.500	C FACTOR	0.62
PITOT TUBE COEFF	.83	PROBE HEATER SETTING	80
		HEATER BOX SETTING	250
READ AND RECORD DATA EVERY 3.0 MINUTES		REFERENCE PRESS DIFF.	.55

TRAVERSE POINT NO.	SAMPLE TIME (MIN.)	CLOCK TIME (24-HR CLOCK)	GAS METER READING (CU.FT.)	VELOCITY HEAD (IN.H2O)	ORIFICE PRESSURE DIFFERENTIAL (IN.H2O)		STACK TEMP (DEG.F)	DRY GAS METER TEMP (DEG.F)		PUMP VACUUM (IN.HG)	SAMPLE BOX TEMP (DEG.F)	IMPINGER TEMP (DEG.F)
					DESIRED	ACTUAL		INLET	OUTLET			
INIT	0	1435	846.608									
A-24	3.0		848.510	.250	.88	.92	150	74	72	3.0	225	62
A-23	6.0		850.120	.220	.74	.76	150	76	74	3.0	270	61
A-22	9.0		852.220	.480	1.06	1.05	150	80	75	4.0	260	61
A-21	12.0		854.680	.520	1.75	1.75	150	85	76	5.0	235	61
A-20	15.0		856.930	.530	1.78	1.75	150	90	77	5.0	270	65
A-19	18.0		859.080	.380	1.28	1.30	150	94	79	4.0	250	66
A-18	21.0		861.520	.580	1.95	1.95	150	96	80	6.0	255	66
A-17	24.0		864.050	.570	1.90	1.90	150	98	82	5.5	255	66
A-16	27.0		866.410	.480	1.62	1.65	151	101	83	5.0	255	66
A-15	30.0		868.850	.500	1.70	1.70	151	102	84	5.0	260	67
A-14	33.0		870.040	.470	1.58	1.60	151	103	85	5.0	260	67
A-13	36.0		872.760	.210	.72	.75	151	104	87	3.0	275	68
A-12	39.0	1514	874.390	.250	.86	.88	151	102	88	3.0	270	68
A-11	42.0	1530	876.660	.420	1.40	1.42	151	88	84	4.0	245	70
A-10	45.0		879.025	.580	1.94	1.90	151	92	86	5.5	255	65
A-9	48.0		881.850	.730	2.45	2.45	151	98	86	7.0	260	62
A-8	51.0		884.710	.770	2.60	2.60	151	104	88	8.0	255	64
A-7	54.0		887.670	.770	2.60	2.60	154	108	89	8.0	265	66
A-6	57.0		890.635	.780	2.62	2.60	154	112	90	8.2	275	70
A-5	60.0		893.615	.780	2.62	2.62	154	115	91	8.5	280	76
A-4	63.0		896.520	.720	2.40	2.40	154	116	92	8.0	250	73
A-3	66.0		899.290	.620	2.09	2.10	153	118	93	7.5	260	74
A-2	69.0		901.935	.610	2.07	2.07	153	119	94	7.5	260	73
A-1	72.0	1603	904.398	.500	1.70	1.70	153	118	95	6.5	260	73
B-24	75.0	1621	906.410	.330	1.12	1.10	150	90	86	5.5	240	60
B-23	78.0		908.550	.350	1.19	1.20	150	92	87	5.5	245	56
B-22	81.0		910.340	.290	.95	.98	150	95	88	5.0	245	56

PLANT I.M.C. KINGSFORD, FLA. DATE 02/12/73

SAMPLING LOCATION ROCK DRYING-OUTLET RUN NUMBER 1

TRAVERSE POINT NO.	SAMPLE TIME (MIN.)	CLOCK TIME (24-HR CLOCK)	GAS METER READING (CU.FT.)	VELOCITY HEAD (IN.H2O)	ORIFICE PRESSURE DIFFERENTIAL (IN.H2O)		STACK TEMP (DEG.F)	DRY GAS METER TEMP (DEG.F)		PUMP VACUUM (IN.HG)	SAMPLE BOX TEMP (DEG.F)	IMPINGER TEMP (DEG.F)
					DESIRED	ACTUAL		INLET	OUTLET			
B-21	84.0		912.225	.300	1.01	.99	150	98	89	5.0	255	58
B-20	87.0		914.075	.310	1.05	1.05	150	100	88	5.0	245	58
B-19	90.0		916.075	.370	1.26	1.25	152	102	89	5.5	240	58
B-18	93.0		918.180	.390	1.31	1.32	152	104	90	6.0	240	58
B-17	96.0		920.270	.370	1.26	1.26	150	105	90	6.0	255	58
B-16	99.0		922.225	.400	1.35	1.35	150	106	91	6.0	245	57
B-15	102.0		924.340	.360	1.22	1.25	151	109	92	6.0	255	57
B-14	105.0		926.510	.430	1.45	1.45	149	110	93	6.5	245	57
B-13	108.0	1657	928.448	.370	1.26	1.25	150	113	94	6.0	250	57
B-12	111.0	1710	930.205	.230	.78	.79	150	95	89	4.5	235	56
B-11	114.0		932.225	.380	1.29	1.30	151	98	90	6.0	220	56
B-10	117.0		933.465	.520	1.75	1.80	151	102	91	8.5	240	55
B-9	120.0		937.270	.680	2.30	2.30	151	108	92	11.0	250	55
B-8	123.0		940.200	.780	2.60	2.60	151	112	92	13.5	270	56
B-7	126.0		943.375	.860	2.90	2.90	151	117	93	14.5	275	56
B-6	129.0		946.430	.870	2.92	2.92	151	122	94	15.0	275	60
B-5	132.0		949.530	.860	2.90	2.85	150	125	95	15.5	280	65
B-4	135.0		952.690	.840	2.75	2.75	150	129	96	15.2	275	65
B-3	138.0		955.750	.810	2.70	2.70	151	132	98	15.0	280	70
B-2	141.0		958.875	.780	2.60	2.60	150	133	100	11.0	275	73
B-1	144.0	1746	961.534	.600	2.00	2.00	150	133	101	8.0	270	83
TOTALS	144.0		114.926									
AVERAGE					1.75	1.76	151	105	88	7.1	256	64

PLANT: I.M.C. KINGSFORD, FLA.
SAMPLING LOCATION: ROCK DRYING-OUTLET
DATE: 02/12/73
RUN NUMBER: 1

DRY MOLECULAR WEIGHT DETERMINATION

GAS	VOL. PERCENT DRY BASIS
CO2	5.000
O2	15.430
CO	.030
N2	79.540
TOTAL	100.000
DRY MOLECULAR WEIGHT,LB/LB-MOLE	29.42

MOISTURE CONTENT DETERMINATION

IMPINGER MOISTURE,ML	780.0
SILICA MOISTURE,ML	89.5
TOTAL MOISTURE,ML	869.5
WATER VAPOR COLLECTED, STD. CU. FT.	41.214
GAS METER VOL.,CU.FT.	
GROSS TOTAL	114.926
LESS LEAKAGE CORR	.000
NET TOTAL	114.926
DRY GAS VOL. THROUGH METER,STD. CU. FT	111.796
MOISTURE CONTENT, VOL. FRACTION	.2694

STACK GAS VELOCITY AND VOLUME DETERMINATION

STACK AREA,SQ. FT.	38.027
PITOT TUBE COEFFICIENT	.83
STACK ABS.PRESS.,IN.HG	30.39
STACK GAS TEMPERATURE,DEG.F	151
STACK GAS MOL. WT.,WET BASIS	26.34
SQRT(VEL HD X STACK TEMP ABS)	17.6
STACK GAS VELOCITY, ACT. FPS	44.1
STACK GAS VOLUME,STD CFM,	
WET BASIS	88561.5
DRY BASIS	64707.0

ISOKINETIC VARIATION

PERCENT OF ISOKINETIC SAMPLING	108.9

EMISSION DATA

SAMPLE	PROBE,CYCLONE,FILTER	TOTAL
WEIGHT,MG	469.0000	537.0000
STD CONC,GR/SCF	.06046	.07412
ACT CONC,GR/ACF	.03892	.04772
EMISSION RATE,LB/HR	33.533	41.113
THROUGHPUT, TON/HR	270.0000	
EMISSION FACTOR,LB/TON	.124	.152

PLANT	I.M.C. KINGSFORD, FLA.	DATE	02/13/73
SAMPLING LOCATION	INLET-ROCK DRYER	RUN NUMBER	2
SAMPLE TYPE	PARTICULATE		
OPERATOR	R.GERSTLE,G. PARNELL	PROBE LENGTH AND TYPE	6FT GLASS
AMBIENT TEMP.(DEG.F)	70	NOZZLE I.D.	.1800
BAR.PRESS.(IN.HG)	30.40	ASSUMED MOISTURE	32
STATIC PRESS(IN.H2O)	6.00	SAMPLE BOX NUMBER	1
FILTER NUMBER(S)	73-027	METER BOX NUMBER	4
STACK INSIDE DIM(IN)	72.000 X 56.500	METER HEAD DIFF.	1.67
PITOT TUBE COEFF	.83	C FACTOR	0.53
		PROBE HEATER SETTING	80
READ AND RECORD DATA EVERY 2.5 MINUTES		HEATER BOX SETTING	250
		REFERENCE PRESS DIFF.	3.65

TRAVERSE POINT NO.	SAMPLE TIME (MIN.)	CLOCK TIME (24-HR CLOCK)	GAS METER READING (CU.FT.)	VELOCITY HEAD (IN.H2O)	ORIFICE PRESSURE DIFFERENTIAL (IN.H2O)		STACK TEMP (DEG.F)	DRY GAS METER TEMP (DEG.F)		PUMP VACUUM (IN.HG)	SAMPLE BOX TEMP (DEG.F)	IMPINGER TEMP (DEG.F)
					DESIRED	ACTUAL		INLET	OUTLET			
INIT	0	0916	525.260									
A-1	2.5		525.770	.180	.10	.10	164	68	68	5.0	240	58
A-2	5.0		526.900	1.200	.64	.64	164	68	68	5.0	245	58
A-3	7.5		528.140	1.250	.67	.67	164	70	70	5.0	255	56
A-4	10.0		529.300	1.200	.64	.64	164	70	70	5.0	220	56
A-5	12.5		530.530	1.100	.59	.59	164	70	70	5.0	245	56
A-6	15.0		531.510	.960	.52	.52	164	72	70	5.0	245	57
A-7	17.5		532.570	.920	.49	.49	164	74	70	5.0	240	57
A-8	20.0		533.450	.650	.35	.35	164	74	70	5.0	255	58
A-9	22.5		533.950	.130	.08	.08	164	74	70	5.0	230	59
A-10	25.0		534.000	.000	.00	.00	164	74	70	5.0	210	60
B-1	27.5	0945	534.350	.200	.10	.10	164	70	70	5.0	235	67
B-2	30.0		535.420	1.900	1.00	1.00	164	76	72	5.0	230	62
B-3	32.5		536.800	1.650	.87	.87	164	78	72	5.0	245	59
B-4	35.0		538.100	1.400	.74	.74	164	80	72	5.0	245	60
B-5	37.5		539.380	1.300	.70	.70	164	80	74	5.0	245	60
B-6	40.0		540.600	1.350	.71	.71	164	81	74	5.0	210	61
B-7	42.5		541.900	1.500	.79	.79	164	82	74	5.0	245	63
B-8	45.0		543.260	1.500	.79	.79	164	83	74	5.0	230	66
B-9	47.5		544.320	.850	.46	.46	164	81	74	5.0	250	64
B-10	50.0		544.500	.130	.09	.09	164	80	75	5.0	235	64
C-1	52.5	1015	545.300	.150	.09	.09	165	80	74	5.0	210	67
C-2	55.0		546.600	1.500	.79	.79	165	82	76	5.0	235	62
C-3	57.5		547.950	1.600	.85	.85	165	82	78	5.0	210	62
C-4	60.0		549.230	1.250	.67	.67	165	82	78	5.0	225	62
C-5	62.5		550.420	1.200	.64	.64	165	82	78	5.0	250	63
C-6	65.0		551.530	1.050	.56	.56	165	84	79	5.0	240	64
C-7	67.5		552.740	1.100	.59	.59	165	86	80	5.0	230	65

PLANT: I.M.C. KINGSFORD, FLA.
SAMPLING LOCATION: INLET-ROCK DRYER
DATE: 02/13/73
RUN NUMBER: 2

TRAVERSE POINT NO.	SAMPLE TIME (MIN.)	CLOCK TIME (24-HR CLOCK)	GAS METER READING (CU.FT.)	VELOCITY HEAD (IN.H2O)	ORIFICE PRESSURE DIFFERENTIAL (IN.H2O)		STACK TEMP (DEG.F)	DRY GAS METER TEMP (DEG.F)		PUMP VACUUM (IN.HG)	SAMPLE BOX TEMP (DEG.F)	IMPINGER TEMP (DEG.F)
					DESIRED	ACTUAL		INLET	OUTLET			
C-8	70.0		554.035	1.400	.73	.73	165	86	80	5.0	235	65
C-9	72.5		555.500	2.100	1.10	1.10	165	87	80	5.0	215	67
C-10	75.0		556.800	1.000	.55	.55	165	87	80	5.0	245	68
D-1	77.5	1052	557.570	.350	.19	.19	165	80	80	5.0	240	75
D-2	80.0		558.730	1.100	.59	.59	165	81	80	5.0	240	69
D-3	82.5		559.980	1.350	.72	.72	165	81	80	5.0	240	70
D-4	85.0	1100	561.285	1.200	.63	.63	165	82	80	5.0	250	64
D-5	87.5	1251	562.310	1.150	.61	.61	165	76	76	5.0	255	67
D-6	90.0		563.460	1.150	.61	.61	165	78	76	5.0	240	63
D-7	92.5		564.620	1.220	.66	.66	165	78	76	5.0	240	60
D-8	95.0		565.850	1.300	.70	.70	165	80	76	5.0	240	60
D-9	97.5		567.150	1.600	.86	.86	165	80	76	6.0	225	61
D-10	100.0		568.430	1.400	.75	.75	165	80	78	5.0	240	62
E-1	102.5	1310	569.460	1.000	.56	.56	164	80	76	5.0	245	65
E-2	105.0		570.740	1.400	.75	.75	164	81	76	5.0	230	66
E-3	107.5		571.920	1.300	.70	.70	164	82	78	5.0	220	65
E-4	110.0		573.170	1.300	.70	.70	164	83	78	5.0	250	67
E-5	112.5		574.340	1.250	.67	.67	164	84	78	5.0	250	66
E-6	115.0		575.600	1.450	.76	.76	164	84	78	5.0	240	69
E-7	117.5		576.890	1.500	.80	.80	164	86	79	5.0	255	73
E-8	120.0		578.260	1.600	.86	.86	164	86	80	5.0	240	73
E-9	122.5		579.670	2.000	1.05	1.05	164	87	80	5.0	240	75
E-10	125.0	1335	581.120	1.900	1.00	1.00	164	88	80	5.0	245	74
TOTALS	125.0		55.960									
AVERAGE					.62	.62	164	80	75	5.0	238	64

PLANT I.M.C. KINGSFORD, FLA.
SAMPLING LOCATION INLET-ROCK DRYER

DATE 02/13/73
RUN NUMBER 2

DRY MOLECULAR WEIGHT DETERMINATION

GAS	VOL. PERCENT DRY BASIS
CO2	3.200
O2	17.500
CO	.030
N2	79.270
TOTAL	100.000

DRY MOLECULAR WEIGHT,LB/LB-MOLE 29.21

MOISTURE CONTENT DETERMINATION

IMPINGER MOISTURE,ML	545.0
SILICA MOISTURE,ML	23.0
TOTAL MOISTURE,ML	568.0
WATER VAPOR COLLECTED, STD. CU. FT.	26.923
GAS METER VOL.,CU.FT.	
GROSS TOTAL	55.860
LESS LEAKAGE CORR	.000
NET TOTAL	55.860
DRY GAS VOL. THROUGH METER,STD. CU. FT	56.089
MOISTURE CONTENT, VOL. FRACTION	.3243

STACK GAS VELOCITY AND VOLUME DETERMINATION

STACK AREA,SQ. FT.	28.250
PITOT TUBE COEFFICIENT	.83
STACK ABS.PRESS.,IN.HG	30.84
STACK GAS TEMPERATURE,DEG.F	164
STACK GAS MOL. WT.,WET BASIS	25.58
SQRT(VEL HD X STACK TEMP ABS)	25.9
STACK GAS VELOCITY, ACT. FPS	65.4
STACK GAS VOLUME,STD CFM,	
WET BASIS	97055.0
DRY BASIS	65577.5

ISOKINETIC VARIATION

PERCENT OF ISOKINETIC SAMPLING 109.3

EMISSION DATA

SAMPLE	PROBE,CYCLONE,FILTER	TOTAL
WEIGHT,MG	7566.0000	7698.0000
STD CONC,GR/SCF	2.08170	2.11802
ACT CONC,GR/ACF	1.23144	1.25293
EMISSION RATE,LB/HR	1170.105	1190.520
THROUGHPUT, TON/HR	350.0000	
EMISSION FACTOR,LB/TON	3.343	3.401

FIELD DATA

PLANT	I.M.C. KINGSFORD, FLA.	DATE	02/13/73
SAMPLING LOCATION	ROCK DRYING OUTLET	RUN NUMBER	2
SAMPLE TYPE	PARTICULATE	PROBE LENGTH AND TYPE	8FT GLASS-HEATED
OPERATOR	O'CONNOR-MEER	NOZZLE I.D.	.2770
AMBIENT TEMP.(DEG.F)	75	ASSUMED MOISTURE	28
BAR.PRESS.(IN.HG)	30.40	SAMPLE BOX NUMBER	A
STATIC PRESS(IN.H2O)	-.21	METER BOX NUMBER	5
FILTER NUMBER(S)	73-004	METER HEAD DIFF.	1.49
STACK INSIDE DIM(IN)	83.500	C FACTOR	.56
PITOT TUBE COEFF	.83	PROBE HEATER SETTING	80
		HEATER BOX SETTING	250
READ AND RECORD DATA EVERY 3.0 MINUTES		REFERENCE PRESS DIFF.	.62

TRAVERSE POINT NO.	SAMPLE TIME (MIN.)	CLOCK TIME (24-HR CLOCK)	GAS METER READING (CU.FT.)	VELOCITY HEAD (IN.H2O)	ORIFICE PRESSURE DIFFERENTIAL (IN.H2O)		STACK TEMP (DEG.F)	DRY GAS METER TEMP (DEG.F)		PUMP VACUUM (IN.HG)	SAMPLE BOX TEMP (DEG.F)	IMPINGER TEMP (DEG.F)
					DESIRED	ACTUAL		INLET	OUTLET			
INIT	0	0915	961.812									
A-24	03.0	0918	964.390	.650	1.98	2.00	148	69	64	6.0	235	58
A-23	06.0	0921	969.950	.640	1.90	1.95	148	74	65	5.0	240	58
A-22	09.0	0924	969.380	.620	1.85	1.85	148	79	66	5.0	255	60
A-21	12.0	0927	971.610	.470	1.43	1.45	148	83	68	4.0	260	62
A-20	15.0	0930	973.660	.380	1.16	1.20	149	85	69	3.5	245	64
A-19	18.0	0933	975.710	.400	1.20	1.20	149	87	71	3.5	255	63
A-18	21.0	0936	977.840	.480	1.45	1.45	149	88	74	4.0	250	63
A-17	24.0	0939	978.005	.420	1.28	1.30	149	89	76	4.0	255	63
A-16	27.0	0942	982.010	.400	1.21	1.20	149	90	76	4.0	250	64
A-15	30.0	0945	984.020	.410	1.25	1.22	148	91	77	4.0	255	65
A-14	33.0	0948	985.840	.320	.97	.95	148	92	78	3.0	250	66
A-13	36.0	0951	987.524	.280	.84	.86	148	91	79	3.0	250	68
A-12	39.0	1001	989.975	.250	.76	.77	148	81	77	3.0	235	65
A-11	42.0	1004	991.010	.430	1.30	1.30	148	85	80	5.0	225	63
A-10	45.0	1007	993.350	.530	1.70	1.70	148	88	80	5.5	245	63
A-9	48.0	1010	995.980	.750	2.25	2.25	148	92	80	7.0	250	63
A-8	51.0	1013	998.840	.830	2.45	2.45	148	97	82	7.5	245	64
A-7	54.0	1016	1.660	.850	2.50	2.48	148	100	82	7.5	260	68
A-6	57.0	1019	4.635	.900	2.65	2.65	148	104	84	8.5	270	73
A-5	60.0	1022	7.515	.860	2.58	2.53	148	108	85	8.0	260	74
A-4	63.0	1025	10.425	.820	2.44	2.45	148	110	86	8.0	255	72
A-3	66.0	1028	13.290	.790	2.30	2.30	148	111	87	8.0	255	71
A-2	69.0	1031	15.010	.700	2.10	2.10	148	111	99	7.5	260	72
A-1	72.0	1034	18.439	.550	1.65	1.65	148	110	90	6.0	270	74
B-1	75.0	1048	20.835	.700	2.10	2.10	148	88	84	6.0	200	66
B-2	78.0	1051	23.550	.790	2.30	2.30	148	94	85	8.0	200	66
B-3	81.0	1054	26.320	.780	2.30	2.30	148	99	87	8.0	200	66

PLANT: I.M.C. KINGSFORD, FLA.
SAMPLING LOCATION: ROCK DRYING OUTLET
DATE: 02/13/73
RUN NUMBER: 2

TRAVERSE POINT NO.	SAMPLE TIME (MIN.)	CLOCK TIME (24-HR CLOCK)	GAS METER READING (CU.FT.)	VELOCITY HEAD (IN.H2O)	ORIFICE PRESSURE DIFFERENTIAL (IN.H2O)		STACK TEMP (DEG.F)	DRY GAS METER TEMP (DEG.F)		PUMP VACUUM (IN.HG)	SAMPLE BOX TEMP (DEG.F)	IMPINGER TEMP (DEG.F)
					DESIRED	ACTUAL		INLET	OUTLET			
B-4	84.0	1057	29.194	.850	2.50	2.50	148	103	87	10.0	220	72
B-5	87.0	1253	31.020	.870	2.58	1.00	152	79	76	5.0	235	64
B-6	90.0	1310	153.510	.900	2.70	2.70	152	80	80	13.0	225	63
B-7	93.0	1313	155.070	.900	2.65	2.60	151	81	80	12.7	220	57
B-8	96.0	1316	158.480	.830	2.50	2.50	151	86	80	12.7	230	63
B-9	99.0	1319	161.290	.920	2.70	2.60	151	91	91	15.0	225	68
B-10	102.0	1322	163.950	.750	2.20	2.25	151	96	82	14.0	260	70
B-11	105.0	1325	166.090	.430	1.32	1.50	150	99	84	9.0	210	75
B-12	108.0	1328	167.928	.340	1.02	1.00	151	100	86	8.0	230	73
B-24	111.0	1338	169.935	.400	1.20	1.20	151	93	87	8.0	240	53
B-23	114.0	1341	172.190	.600	1.80	1.80	151	97	87	10.0	195	67
B-22	117.0	1344	174.535	.580	1.75	1.75	151	97	88	10.2	195	68
B-21	120.0	1347	176.775	.490	1.45	1.50	154	98	85	9.5	245	69
B-20	123.0	1350	178.725	.390	1.15	1.15	153	99	86	7.8	240	69
B-19	126.0	1353	180.550	.340	1.04	1.05	153	99	86	7.5	260	69
B-18	129.0	1356	182.285	.280	.85	.85	153	100	86	7.0	260	70
B-17	132.0	1359	183.975	.280	.85	.85	153	100	86	7.0	275	69
B-16	135.0	1402	185.420	.170	.53	.50	153	100	87	5.5	245	69
B-15	138.0	1405	186.560	.130	.40	.40	153	98	87	5.0	220	68
B-14	141.0	1408	188.075	.240	.73	.73	153	97	87	7.0	210	68
B-13	144.0	1411	69.314	.240	.73	.73	153	97	87	7.0	195	68
TOTALS	144.0		107.502									
AVERAGE					1.68	1.65	150	93	81	7.2	239	67

PLANT: I.M.C. KINGSFORD, FLA.
SAMPLING LOCATION: ROCK DRYING OUTLET
DATE: 02/13/73
RUN NUMBER: 2

DRY MOLECULAR WEIGHT DETERMINATION

GAS	VOL. PERCENT DRY BASIS
CO2	4.033
O2	15.133
CO	.000
N2	80.834
TOTAL	100.000
DRY MOLECULAR WEIGHT, LB/LB-MOLE	29.25

MOISTURE CONTENT DETERMINATION

IMPINGER MOISTURE, ML	787.0
SILICA MOISTURE, ML	48.2
TOTAL MOISTURE, ML	835.2
WATER VAPOR COLLECTED, STD. CU. FT.	39.588
GAS METER VOL., CU.FT.	
GROSS TOTAL	107.502
LESS LEAKAGE CORR	.000
NET TOTAL	107.502
DRY GAS VOL. THROUGH METER, STD. CU. FT	106.232
MOISTURE CONTENT, VOL. FRACTION	.2715

STACK GAS VELOCITY AND VOLUME DETERMINATION

STACK AREA, SQ. FT.	38.027
PITOT TUBE COEFFICIENT	.83
STACK ABS. PRESS., IN.HG	30.38
STACK GAS TEMPERATURE, DEG.F	150
STACK GAS MOL. WT., WET BASIS	26.20
SQRT(VEL HD X STACK TEMP ABS)	18.1
STACK GAS VELOCITY, ACT. FPS	45.4
STACK GAS VOLUME, STD CFM,	
WET BASIS	91376.3
DRY BASIS	66568.9

ISOKINETIC VARIATION

PERCENT OF ISOKINETIC SAMPLING	100.6

EMISSION DATA

SAMPLE	PROBE, CYCLONE, FILTER	TOTAL
WEIGHT, MG	376.0000	229.0000
STD CONC, GR/SCF	.05462	.03326
ACT CONC, GR/ACF	.03511	.02138
EMISSION RATE, LB/HR	31.166	18.981
THROUGHPUT, TON/HR	350.0000	
EMISSION FACTOR, LB/TON	.089	.054

FIELD DATA

PLANT	I.M.C. KINGSFORD, FLORIDA	DATE	02/13/73
SAMPLING LOCATION	INLET ROCK DRYER	RUN NUMBER	3
SAMPLE TYPE	PARTICULATE	PROBE LENGTH AND TYPE	6' GLASS
OPERATOR	R GERSTLE / G PARNELL	NOZZLE I.D.	.1800
AMBIENT TEMP.(DEG.F)	70	ASSUMED MOISTURE	32
BAR.PRESS.(IN.HG)	30.32	SAMPLE BOX NUMBER	1
STATIC PRESS(IN.H2O)	6.00	METER BOX NUMBER	4
FILTER NUMBER(S)	73-005	METER HEAD DIFF.	1.67
STACK INSIDE DIM(IN)	72.000 X 56.500	C FACTOR	0.53
PITOT TUBE COEFF	.83	PROBE HEATER SETTING	80
		HEATER BOX SETTING	250
READ AND RECORD DATA EVERY 2.5 MINUTES		REFERENCE PRESS DIFF.	3.65

TRAVERSE POINT NO.	SAMPLE TIME (MIN.)	CLOCK TIME (24-HR CLOCK)	GAS METER READING (CU.FT.)	VELOCITY HEAD (IN.H2O)	ORIFICE PRESSURE DIFFERENTIAL (IN.H2O)		STACK TEMP (DEG.F)	DRY GAS METER TEMP (DEG.F)		PUMP VACUUM (IN.HG)	SAMPLE BOX TEMP (DEG.F)	IMPINGER TEMP (DEG.F)
					DESIRED	ACTUAL		INLET	OUTLET			
INIT	0	1443	581.181									
E1	2.5		582.380	1.100	.59	.59	165	78	76	5.0	230	60
E2	5.0		583.690	1.600	.85	.85	165	78	76	5.0	270	60
E3	7.5		584.980	1.300	.69	.69	165	80	76	5.0	220	62
E4	10.0		586.100	1.200	.64	.64	165	80	70	5.0	220	64
E5	12.5		587.320	1.300	.69	.69	165	80	76	5.0	270	65
E6	15.0		588.510	1.400	.74	.74	165	81	76	5.0	230	65
E7	17.5		589.790	1.600	.85	.85	165	83	76	5.0	265	65
E8	20.0		591.190	1.850	.97	.97	165	84	77	5.0	250	65
E9	22.5		592.570	1.850	.97	.97	165	84	78	5.0		65
E10	25.0		594.040	2.000	1.05	1.05		84	78	6.0	260	65
D-1	27.5	1514	594.040	.000	.00	.00	164				270	66
D-2	30.0		595.140	.780	.42	.42	164	80	78	5.0	260	66
D-3	32.5		596.270	1.450	.76	.76	164	82	78	5.0		67
D-4	35.0		597.490	1.200	.64	.64	164	83	79	5.0	230	68
D-5	37.5		598.580	1.050	.56	.56	164	84	79	5.0	240	70
D-6	40.0		599.680	1.050	.56	.56	164	84	79	5.0	280	72
D-7	42.5		600.770	1.100	.58	.58	164	84	80	5.0	250	72
D-8	45.0		602.000	1.300	.69	.69	164	84	80	5.0	250	74
D-9	47.5		603.300	1.500	.80	.80	164	85	80	6.0	250	74
D-10	50.0		604.681	1.700	.90	.90	164	85	70	7.0	250	74
C-1	52.5	1542	605.400	.450	.24	.24	164	81	80	6.0	280	65
C-2	55.0		606.730	1.600	.85	.85	164	81	80	8.0	240	65
C-3	57.5		608.000	1.450	.75	.76	164	82	78	7.0	240	65
C-4	60.0		609.270	1.300	.69	.69	164	83	79	6.0	240	65
C-5	62.5		610.450	1.300	.69	.69	165	84	78	6.0	250	65
C-6	65.0		611.680	1.300	.69	.69	165	84	78	6.0	250	65
C-7	67.5		613.000	1.400	.74	.74	165	85	78	7.0	250	65

PLANT I.M.C. KINGSFORD, FLORIDA — DATE 02/13/73
SAMPLING LOCATION INLET ROCK DRYER — RUN NUMBER 3

TRAVERSE POINT NO.	SAMPLE TIME (MIN.)	CLOCK TIME (24-HR CLOCK)	GAS METER READING (CU.FT.)	VELOCITY HEAD (IN.H2O)	ORIFICE PRESSURE DIFFERENTIAL (IN.H2O)		STACK TEMP (DEG.F)	DRY GAS METER TEMP (DEG.F)		PUMP VACUUM (IN.HG)	SAMPLE BOX TEMP (DEG.F)	IMPINGER TEMP (DEG.F)
					DESIRED	ACTUAL		INLET	OUTLET			
C-8	70.0		614.220	1.600	.85	.85	165	85	79	7.0	250	65
C-9	72.5		615.700	2.000	1.05	1.05	165	85	79	9.0	250	65
C-10	75.0		616.545	.500	.27	.27	165	85	78	5.0	250	65
B-1	77.5	1615	617.020	.220	.12	.12	164	78	76	5.0	210	65
B-2	80.0		618.420	2.000	1.05	1.05	164	80	78	9.0	280	65
B-3	82.5		619.750	1.600	.85	.85	164	81	78	8.0	275	65
B-4	85.0		621.100	1.600	.85	.85	164	82	78	8.0	260	65
B-5	87.5		622.450	1.650	.88	.88	164	83	78	9.0	290	65
B-6	90.0		623.810	1.650	.88	.88	164	83	76	9.0	245	65
B-7	92.5		625.175	1.750	.93	.93	164	83	76	10.0	280	70
B-8	95.0		626.570	1.700	.90	.90	164	84	76	10.0	280	68
B-9	97.5		627.600	.850	.46	.46	164	83	76	7.0	280	67
B-10	100.0		628.030	.180	.10	.10	164	82	76	5.0	280	79
A-1	102.5	1645	628.400	.120	.07	.07	164	80	74	5.0	230	77
A-2	105.0		629.580	1.450	.76	.76	164	80	76	8.0	255	72
A-3	107.5		630.590	1.300	.69	.69	164	80	76	8.0	290	69
A-4	110.0		631.790	1.300	.69	.69	164	81	76	8.0	240	70
A-5	112.5		632.970	1.400	.74	.74	164	82	76	8.0	290	72
A-6	115.0		634.200	1.300	.69	.69	164	82	76	9.0	235	74
A-7	117.5		635.340	1.150	.62	.62	164	83	76	9.0	235	74
A-8	120.0		636.350	.850	.46	.46	164	83	76	7.0	275	75
A-9	122.5		636.830	.180	.10	.10	164	83	76	5.0	240	76
A-10	125.0	1710	636.857	.000	.00	.00	164					
TOTALS	125.0		55.676									
AVERAGE					.65	.65	164	82	77	6.5	255	68

PLANT I.M.C. KINGSFORD, FLORIDA
SAMPLING LOCATION INLET ROCK DRYER

DATE 02/13/73
RUN NUMBER 3

DRY MOLECULAR WEIGHT DETERMINATION

GAS	VOL. PERCENT DRY BASIS
CO2	5.000
O2	15.500
CO	.000
N2	79.500
TOTAL	100.000
DRY MOLECULAR WEIGHT,LB/LB-MOLE	29.42

MOISTURE CONTENT DETERMINATION

IMPINGER MOISTURE,ML	515.0
SILICA MOISTURE,ML	21.8
TOTAL MOISTURE,ML	536.8
WATER VAPOR COLLECTED, STD. CU. FT.	25.444
GAS METER VOL.,CU.FT.	
GROSS TOTAL	55.676
LESS LEAKAGE CORR	.000
NET TOTAL	55.676
DRY GAS VOL. THROUGH METER,STD. CU. FT	55.555
MOISTURE CONTENT, VOL. FRACTION	.3141

STACK GAS VELOCITY AND VOLUME DETERMINATION

STACK AREA,SQ. FT.	28.250
PITOT TUBE COEFFICIENT	.83
STACK ABS.PRESS.,IN.HG	30.76
STACK GAS TEMPERATURE,DEG.F	164
STACK GAS MOL. WT.,WET BASIS	25.83
SQRT(VEL HD X STACK TEMP ABS)	26.2
STACK GAS VELOCITY, ACT. FPS	66.1
STACK GAS VOLUME,STD CFM,	
WET BASIS	97744.8
DRY BASIS	67040.2

ISOKINETIC VARIATION

PERCENT OF ISOKINETIC SAMPLING	105.9

EMISSION DATA

SAMPLE	PROBE,CYCLONE,FILTER	TOTAL
WEIGHT,MG	6128.0000	6226.0000
STD CONC,GR/SCF	1.70227	1.72949
ACT CONC,GR/ACF	1.01953	1.03584
EMISSION RATE,LB/HR	978.174	993.817
THROUGHPUT, TON/HR	380.0000	
EMISSION FACTOR,LB/TON	2.574	2.615

FIELD DATA

PLANT	I.M.C. KINGSFORD, FLA.	DATE	02/13/73
SAMPLING LOCATION	ROCK DRYING - OUTLET	RUN NUMBER	3
SAMPLE TYPE	PARTICULATE	PROBE LENGTH AND TYPE	8FT GLASS HEATED
OPERATOR	O'CONNOR - MEER	NOZZLE I.D.	.2770
AMBIENT TEMP.(DEG.F)	75	ASSUMED MOISTURE	28
BAR.PRESS.(IN.HG)	30.28	SAMPLE BOX NUMBER	
STATIC PRESS(IN.H2O)	-.21	METER BOX NUMBER	3
FILTER NUMBER(S)	73-028	METER HEAD DIFF.	1.55
STACK INSIDE DIM(IN)	83.500	C FACTOR	.595
PITOT TUBE COEFF	.83	PROBE HEATER SETTING	80
		HEATER BOX SETTING	.8
READ AND RECORD DATA EVERY 3.0 MINUTES		REFERENCE PRESS DIFF.	.59

TRAVERSE POINT NO.	SAMPLE TIME (MIN.)	CLOCK TIME (24-HR CLOCK)	GAS METER READING (CU.FT.)	VELOCITY HEAD (IN.H2O)	ORIFICE PRESSURE DIFFERENTIAL (IN.H2O)		STACK TEMP (DEG.F)	DRY GAS METER TEMP (DEG.F)		PUMP VACUUM (IN.HG)	SAMPLE BOX TEMP (DEG.F)	IMPINGER TEMP (DEG.F)
					DESIRED	ACTUAL		INLET	OUTLET			
INIT	0	1440	190.053									
A-1	3.0	1443	192.120	.550	1.75	1.75	153	87	85	6.0	250	58
A-2	6.0	1446	194.530	.650	2.05	2.05	153	89	85	7.5	275	58
A-3	9.0	1449	197.215	.700	2.25	2.25	153	92	85	10.0	275	60
A-4	12.0	1452	199.960	.790	2.40	2.40	153	97	85	11.0	300	68
A-5	15.0	1455	202.765	.820	2.58	2.55	153	101	85	11.0	300	79
A-6	18.0	1458	205.635	.820	2.58	2.55	153	103	85	11.0	250	82
A-7	21.0	1501	208.535	.830	2.60	2.60	153	107	86	11.5	300	82
A-8	24.0	1504	211.375	.780	2.40	2.40	153	109	86	10.5	250	81
A-9	27.0	1507	214.010	.650	2.05	2.05	153	109	87	8.0	260	80
A-10	30.0	1510	216.365	.520	1.65	1.65	153	109	88	6.5	275	78
A-11	33.0	1513	218.360	.360	1.15	1.15	153	107	89	5.0	260	77
A-12	36.0	1516	220.008	.220	.71	.71	153	106	89	3.5	240	74
A-24	39.0	1553	222.390	.620	1.90	1.90	151	84	83	8.0	260	66
A-23	42.0	1556	224.775	.550	1.73	1.73	151	88	84	7.7	277	74
A-22	45.0	1559	227.060	.530	1.70	1.70	151	91	84	8.0	275	72
A-21	48.0	1602	229.450	.580	1.85	1.85	151	92	83	9.0	255	79
A-20	51.0	1605	231.935	.580	1.85	1.85	151	94	82	9.2	225	81
A-19	54.0	1608	234.650	.550	1.73	1.75	151	95	82	8.8	225	80
A-18	57.0	1611	236.770	.540	1.71	1.71	151	96	82	8.8	230	80
A-17	60.0	1614	239.020	.480	1.55	1.55	151	97	82	8.2	280	78
A-16	63.0	1617	241.185	.420	1.35	1.35	151	97	82	7.5	300	76
A-15	66.0	1620	243.255	.350	1.12	1.15	151	97	81	7.0	300	75
A-14	69.0	1623	245.050	.280	.90	.90	151	96	81	5.7	300	75
A-13	72.0	1626	246.617	.210	.67	.67	151	95	81	4.8	310	73
B-24	75.0	1643	248.495	.440	1.40	1.40	150	83	80	8.0	300	67
B-23	78.0	1646	250.430	.300	.98	1.01	151	85	80	7.0	325	67
B-22	81.0	1649	252.095	.250	.82	.82	151	87	80	6.0	300	67

PLANT
SAMPLING LOCATION I.M.C. KINGSFORD, FLA.
ROCK DRYING - OUTLET

DATE 02/13/73
RUN NUMBER 3

TRAVERSE POINT NO.	SAMPLE TIME (MIN.)	CLOCK TIME (24-HR CLOCK)	GAS METER READING (CU.FT.)	VELOCITY HEAD (IN.H2O)	ORIFICE PRESSURE DIFFERENTIAL (IN.H2O)		STACK TEMP (DEG.F)	DRY GAS METER TEMP (DEG.F)		PUMP VACUUM (IN.HG)	SAMPLE BOX TEMP (DEG.F)	IMPINGER TEMP (DEG.F)
					DESIRED	ACTUAL		INLET	OUTLET			
B-21	84.0	1652	253.925	.230	.74	.74	150	87	80	5.5	300	67
B-20	87.0	1655	255.675	.320	1.05	1.05	151	90	80	7.0	300	67
B-19	90.0	1658	257.355	.310	1.00	1.00	151	91	80	7.0	275	67
B-18	93.0	1701	259.270	.380	1.22	1.20	151	92	80	7.5	300	67
B-17	96.0	1704	261.385	.460	1.49	1.50	153	94	81	9.8	290	69
B-16	99.0	1707	263.580	.480	1.53	1.53	153	95	81	10.0	270	70
B-15	102.0	1710	265.740	.420	1.35	1.35	153	96	81	9.5	270	74
B-14	105.0	1713	267.775	.380	1.22	1.22	153	96	81	8.8	260	76
B-13	108.0	1716	269.661	.310	1.00	1.00	151	96	81	7.8	280	76
B-12	111.0	1728	271.190	.200	.66	.66	153	84	79	6.0	290	72
B-11	114.0	1731	272.040	.350	1.13	1.15	153	87	79	8.0	300	65
B-10	117.0	1734	275.450	.350	1.21	1.20	153	92	80	10.0	280	79
B-9	120.0	1737	277.550	.680	2.00	2.00	153	98	80	14.0	280	77
B-8	123.0	1740	280.230	.730	2.28	2.25	153	101	80	14.5	275	75
B-7	126.0	1743	282.670	.840	2.40	2.40	153	102	80	15.5	300	80
B-6	129.0	1746	285.425	.350	2.50	2.50	153	104	81	16.0	300	80
B-5	132.0	1750	288.170	.840	2.40	2.40	153	107	81	16.5	300	80
B-4	135.0	1752	290.960	.800	2.30	2.30	153	109	82	16.5	255	77
B-3	139.0	1755	293.630	.750	2.18	2.18	153	111	82	16.0	280	76
B-2	141.0	1758	295.310	.720	2.10	2.10	153	112	83	16.0	300	75
B-1	144.0	1801	298.969	.720	2.10	2.10	153	113	84	16.0	275	76
TOTALS	144.0		108.916									
AVERAGE					1.65	1.65	152	97	82	9.4	279	74

PLANT: I.M.C. KINGSFORD, FLA.
SAMPLING LOCATION: ROCK DRYING - OUTLET
DATE: 02/13/73
RUN NUMBER: 3

DRY MOLECULAR WEIGHT DETERMINATION

GAS	VOL. PERCENT DRY BASIS
CO2	5.470
O2	15.570
CO	.030
N2	78.930
TOTAL	100.000

DRY MOLECULAR WEIGHT, LB/LB-MOLE: 29.50

MOISTURE CONTENT DETERMINATION

IMPINGER MOISTURE, ML	796.0
SILICA MOISTURE, ML	58.1
TOTAL MOISTURE, ML	854.1
WATER VAPOR COLLECTED, STD. CU. FT.	40.484
GAS METER VOL., CU.FT.	
GROSS TOTAL	108.916
LESS LEAKAGE CORR	.000
NET TOTAL	108.916
DRY GAS VOL. THROUGH METER, STD. CU. FT	106.817
MOISTURE CONTENT, VOL. FRACTION	.2748

STACK GAS VELOCITY AND VOLUME DETERMINATION

STACK AREA, SQ. FT.	38.027
PITOT TUBE COEFFICIENT	.83
STACK ABS.PRESS., IN.HG	30.26
STACK GAS TEMPERATURE, DEG.F	152
STACK GAS MOL. WT., WET BASIS	26.34
SQRT(VEL HD X STACK TEMP ABS)	17.5
STACK GAS VELOCITY, ACT. FPS	44.1
STACK GAS VOLUME, STD CFM,	
WET BASIS	88040.4
DRY BASIS	63843.3

ISOKINETIC VARIATION

PERCENT OF ISOKINETIC SAMPLING: 105.5

EMISSION DATA

SAMPLE	PROBE, CYCLONE, FILTER	TOTAL
WEIGHT, MG	239.0000	320.0000
STD CONC, GR/SCF	.03452	.04623
ACT CONC, GR/ACF	.02193	.02936
EMISSION RATE, LB/HR	18.895	25.299
THROUGHPUT, TON/HR	380.0000	
EMISSION FACTOR, LB/TON	.049	.066

PLANT	I.M.C. KINGSFORD, FLA.	DATE	02/14/73
SAMPLING LOCATION	INLET-ROCK DRYER	RUN NUMBER	4
SAMPLE TYPE	FLUORIDES	PROBE LENGTH AND TYPE	6FT GLASS
OPERATOR	R.GERSTLE,G. PARNELL	NOZZLE I.D.	.1800
AMBIENT TEMP.(DEG.F)	70	ASSUMED MOISTURE	32
BAR.PRESS.(IN.HG)	30.32	SAMPLE BOX NUMBER	
STATIC PRESS(IN.H2O)	6.00	METER BOX NUMBER	4
FILTER NUMBER(S)	273003	METER HEAD DIFF.	1.67
STACK INSIDE DIM(IN)	72.000 X 56.500	C FACTOR	0.53
PITOT TUBE COEFF	.83	PROBE HEATER SETTING	80
		HEATER BOX SETTING	
READ AND RECORD DATA EVERY 3.0 MINUTES		REFERENCE PRESS DIFF.	3.65

TRAVERSE POINT NO.	SAMPLE TIME (MIN.)	CLOCK TIME (24-HR CLOCK)	GAS METER READING (CU.FT.)	VELOCITY HEAD (IN.H2O)	ORIFICE PRESSURE DIFFERENTIAL (IN.H2O)		STACK TEMP (DEG.F)	DRY GAS METER TEMP (DEG.F)		PUMP VACUUM (IN.HG)	SAMPLE BOX TEMP (DEG.F)	IMPINGER TEMP (DEG.F)
					DESIRED	ACTUAL		INLET	OUTLET			
INIT	0	0912	636.941									
A-1	3.0		636.941	.000	.00	.00	164					66
A-2	6.0		638.620	1.650	.87	.87	164	70	70	5.0		58
A-3	9.0		640.100	1.300	.70	.70	164	70	70	5.0		58
A-4	12.0		641.480	1.200	.63	.63	164	72	70	5.0		58
A-5	15.0		642.860	1.200	.63	.63	164	72	70	5.0		60
A-6	18.0		644.150	.980	.53	.53	164	74	71	5.0		61
A-7	21.0		645.430	.980	.53	.53	164	76	72	5.0		63
A-8	24.0		646.560	.740	.41	.41	164	76	72	5.0		68
A-9	27.0		646.800	.100	.05	.05	164	76	70	5.0		60
A-10	30.0		646.800	.000	.00	.00	164	74	70	5.0		60
B-1	33.0	0942	647.380	.230	.12	.12	164	74	72	5.0		60
B-2	36.0		649.000	1.800	.95	.95	164	76	74	7.0		60
B-3	39.0		650.700	1.700	.90	.90	164	80	74	7.0		59
B-4	42.0		652.280	1.500	.79	.79	164	80	74	6.0		61
B-5	45.0		653.840	1.500	.79	.79	164	80	74	6.0		61
B-6	48.0		655.410	1.550	.82	.82	164	80	75	6.0		61
B-7	51.0		657.050	1.600	.84	.84	164	81	75	6.0		61
B-8	54.0		658.680	1.600	.84	.84	164	82	76	5.0		60
B-9	57.0		659.750	.650	.35	.35	164	82	76	5.0		60
B-10	60.0		660.030	.050	.04	.04	164	80	76	5.0		58
C-1	63.0	1016	660.550	.150	.09	.09	164	80	76	5.0		58
C-2	66.0		662.220	1.800	.95	.95	164	81	76	6.0		61
C-3	69.0		663.850	1.600	.84	.84	164	81	78	6.0		61
C-4	72.0		665.390	1.400	.74	.74	164	82	78	6.0		61
C-5	75.0		666.860	1.300	.70	.70	164	82	78	5.0		61
C-6	78.0		668.350	1.300	.70	.70	164	82	78	5.0		61
C-7	81.0		669.800	1.400	.73	.73	164	84	80	6.0		60

PLANT: I.M.C. KINGSFORD, FLA. | DATE: 02/14/73

SAMPLING LOCATION: INLET-ROCK DRYER | RUN NUMBER: 4

TRAVERSE POINT NO.	SAMPLE TIME (MIN.)	CLOCK TIME (24-HR CLOCK)	GAS METER READING (CU.FT.)	VELOCITY HEAD (IN.H2O)	ORIFICE PRESSURE DIFFERENTIAL (IN.H2O)		STACK TEMP (DEG.F)	DRY GAS METER TEMP (DEG.F)		PUMP VACUUM (IN.HG)	SAMPLE BOX TEMP (DEG.F)	IMPINGER TEMP (DEG.F)
					DESIRED	ACTUAL		INLET	OUTLET			
C-8	84.0		671.480	1.600	.85	.85	164	86	80	6.5		60
C-9	87.0		673.300	2.400	1.25	1.25	164	87	80	8.0		60
C-10	90.0		675.320	2.500	1.30	1.30	164	88	80	8.0		60
D-1	93.0	1058	675.320	.000	.00	.00	164	82	80	.0		64
D-2	96.0		676.520	.830	.44	.44	164	82	80	5.0		68
D-3	99.0		678.060	1.450	.76	.76	164	82	80	5.5		63
D-4	102.0		679.680	1.250	.66	.66	164	84	80	5.0		61
D-5	105.0		680.910	1.100	.58	.58	164	85	80	5.0		62
D-6	108.0		682.260	1.050	.55	.55	164	86	80	5.0		63
D-7	111.0		683.680	1.200	.64	.64	164	86	81	5.0		62
D-8	114.0		685.250	1.500	.78	.78	164	88	80	6.0		63
D-9	117.0		687.050	2.000	1.08	1.08	164	90	82	7.0		63
D-10	120.0		688.325	.800	.43	.43	164	90	81	5.0		70
E-1	123.0	1130	689.480	.780	.41	.41	164	86	81	5.0		71
E-2	126.0	1137	691.100	1.400	.74	.74	164	86	82	5.5		70
E-3	129.0		692.420	1.200	.63	.63	164	84	80	5.5		71
E-4	132.0		693.830	1.200	.63	.63	164	84	80	5.5		71
E-5	135.0		695.330	1.200	.63	.63	164	85	82	5.5		71
E-6	138.0		696.780	1.250	.67	.67	164	86	82	6.0		71
E-7	141.0		698.290	1.300	.69	.69	164	86	82	6.0		71
E-8	144.0		700.000	1.800	.94	.94	164	86	82	7.5		71
E-9	147.0		701.760	1.800	.94	.94	164	89	82	7.5		71
E-10	150.0	1210	703.442	1.600	.85	.85	164	90	82	7.0		71
TOTALS	150.0		66.501									
AVERAGE					.64	.64	164	82	77	5.6		63

PLANT I.M.C. KINGSFORD, FLA.
SAMPLING LOCATION INLET-ROCK DRYER

DATE 02/14/73
RUN NUMBER 4

DRY MOLECULAR WEIGHT DETERMINATION

GAS	VOL. PERCENT DRY BASIS
CO2	
O2	
CO	
N2	
TOTAL	
DRY MOLECULAR WEIGHT, LB/LB-MOLE	29.00

MOISTURE CONTENT DETERMINATION

IMPINGER MOISTURE, ML	676.0
SILICA MOISTURE, ML	19.5
TOTAL MOISTURE, ML	695.5
WATER VAPOR COLLECTED, STD. CU. FT.	32.967
GAS METER VOL., CU.FT.	
GROSS TOTAL	66.501
LESS LEAKAGE CORR	.000
NET TOTAL	66.501
DRY GAS VOL. THROUGH METER, STD. CU. FT	66.354
MOISTURE CONTENT, VOL. FRACTION	.3319

STACK GAS VELOCITY AND VOLUME DETERMINATION

STACK AREA, SQ. FT.	28.250
PITOT TUBE COEFFICIENT	.83
STACK ABS. PRESS., IN.HG	30.76
STACK GAS TEMPERATURE, DEG.F	164
STACK GAS MOL. WT., WET BASIS	25.35
SQRT(VEL HD X STACK TEMP ABS)	25.8
STACK GAS VELOCITY, ACT. FPS	65.6
STACK GAS VOLUME, STD CFM,	
WET BASIS	97119.4
DRY BASIS	64883.5

ISOKINETIC VARIATION

PERCENT OF ISOKINETIC SAMPLING	108.9

EMISSION DATA

SAMPLE	WATER SOL. FLUORIDE	TOTAL
WEIGHT, MG	3.1000	137.2000
STD CONC, GR/SCF	.00072	.03190
ACT CONC, GR/ACF	.00042	.01861
EMISSION RATE, LB/HR	.400	17.746
THROUGHPUT, TON/HR	270.0000	
EMISSION FACTOR, LB/TON	.001	.065

FIELD DATA

PLANT	I.M.C. KINGSFORD, FLA.	DATE	02/14/73
SAMPLING LOCATION	ROCK DRYING-OUTLET	RUN NUMBER	4
SAMPLE TYPE	FLUORIDES		
OPERATOR	O'CONNOR-MEER	PROBE LENGTH AND TYPE	8FT GLASS-HEATED
AMBIENT TEMP.(DEG.F)	60	NOZZLE I.D.	.2770
BAR.PRESS.(IN.HG)	30.30	ASSUMED MOISTURE	30
STATIC PRESS(IN.H2O)	-.21	SAMPLE BOX NUMBER	3
FILTER NUMBER(S)	273-002	METER BOX NUMBER	5
STACK INSIDE DIM(IN)	83.500	METER HEAD DIFF.	1.49
PITOT TUBE COEFF	.83	C FACTOR	.54
		PROBE HEATER SETTING	80
READ AND RECORD DATA EVERY 3.0 MINUTES		HEATER BOX SETTING	
		REFERENCE PRESS DIFF.	.64

TRAVERSE POINT NO.	SAMPLE TIME (MIN.)	CLOCK TIME (24-HR CLOCK)	GAS METER READING (CU.FT.)	VELOCITY HEAD (IN.H2O)	ORIFICE PRESSURE DIFFERENTIAL (IN.H2O)		STACK TEMP (DEG.F)	DRY GAS METER TEMP (DEG.F)		PUMP VACUUM (IN.HG)	SAMPLE BOX TEMP (DEG.F)	IMPINGER TEMP (DEG.F)
					DESIRED	ACTUAL		INLET	OUTLET			
INIT	0	0910	32.477									
A-24	3.0	0913	35.020	.650	1.88	1.88	150	70	66	6.2		55
A-23	6.0	0916	37.490	.620	1.80	1.80	150	72	67	7.0		55
A-22	9.0	0919	40.010	.620	1.80	1.80	151	76	68	7.2		56
A-21	12.0	0922	42.750	.600	1.74	1.75	151	78	68	7.5		58
A-20	15.0	0925	44.810	.520	1.50	1.50	150	80	69	7.0		60
A-19	18.0	0928	46.940	.460	1.35	1.35	150	82	70	7.0		62
A-18	21.0	0931	49.110	.480	1.39	1.40	150	82	70	7.0		62
A-17	24.0	0934	51.270	.460	1.35	1.35	150	83	71	7.0		63
A-16	27.0	0937	53.360	.380	1.10	1.10	150	84	72	6.0		63
A-15	30.0	0940	54.925	.250	.73	.73	150	84	72	4.5		63
A-14	33.0	0943	56.490	.260	.75	.75	150	84	73	4.5		63
A-13	36.0	0946	57.912	.200	.59	.59	150	84	74	4.0		63
A-12	39.0	1003	59.425	.270	.78	.78	150	75	73	5.0		60
A-11	42.0	1006	61.060	.270	.78	.78	150	77	74	5.0		62
A-10	45.0	1009	62.930	.380	1.10	1.10	150	80	75	6.0		62
A-9	48.0	1012	65.105	.530	1.55	1.55	150	84	75	8.0		62
A-8	51.0	1015	67.580	.650	1.88	1.90	150	86	75	9.2		63
A-7	54.0	1018	70.310	.780	2.22	2.20	151	89	76	10.5		65
A-6	57.0	1021	73.140	.810	2.31	2.30	151	91	77	12.0		67
A-5	60.0	1024	75.860	.820	2.36	2.30	151	91	77	12.0		67
A-4	63.0	1027	78.615	.800	2.28	2.28	151	92	78	11.8		67
A-3	66.0	1030	81.320	.750	2.13	2.13	151	92	78	11.5		68
A-2	69.0	1033	83.930	.690	1.98	2.00	150	93	79	10.8		70
A-1	72.0	1036	86.385	.670	1.92	1.90	150	95	80	10.0		70
B-12	75.0	1059	88.190	.270	.78	.78	152	80	79	5.0		65
B-11	78.0	1102	89.805	.380	1.10	1.10	152	82	79	5.5		65
B-10	81.0	1105	92.075	.560	1.62	1.62	152	86	80	8.0		62

PLANT: I.M.C. KINGSFORD, FLA.
SAMPLING LOCATION: ROCK DRYING-OUTLET
DATE: 02/14/73
RUN NUMBER: 4

TRAVERSE POINT NO.	SAMPLE TIME (MIN.)	CLOCK TIME (24-HR CLOCK)	GAS METER READING (CU.FT.)	VELOCITY HEAD (IN.H2O)	ORIFICE PRESSURE DIFFERENTIAL (IN.H2O)		STACK TEMP (DEG.F)	DRY GAS METER TEMP (DEG.F)		PUMP VACUUM (IN.HG)	SAMPLE BOX TEMP (DEG.F)	IMPINGER TEMP (DEG.F)
					DESIRED	ACTUAL		INLET	OUTLET			
B-9	84.0	1108	94.625	.700	2.00	2.00	152	91	80	9.0		64
B-8	87.0	1111	97.370	.800	2.29	2.25	152	95	82	10.8		66
B-7	90.0	1114	100.130	.830	2.37	2.20	151	96	82	11.0		68
B-6	93.0	1117	102.875	.550	2.42	2.18	151	98	83	10.5		70
B-5	96.0	1120	105.590	.810	2.32	2.15	151	100	84	10.5		70
B-4	99.0	1123	108.310	.830	2.37	2.15	150	101	84	10.3		70
B-3	102.0	1126	111.030	.780	2.25	2.13	150	102	85	10.3		70
B-2	105.0	1129	113.670	.760	2.20	2.10	150	104	86	10.2		70
B-1	108.0	1132	116.254	.620	1.80	1.80	150	104	87	9.0		70
B-24	111.0	1143	118.470	.450	1.30	1.30	152	90	83	7.0		66
B-23	114.0	1146	120.590	.450	1.30	1.30	152	92	85	7.0		69
B-22	117.0	1149	122.680	.450	1.30	1.30	152	95	85	7.0		67
B-21	120.0	1152	124.740	.420	1.22	1.22	150	97	86	7.0		68
B-20	123.0	1155	126.850	.410	1.20	1.20	150	99	86	7.0		68
B-19	126.0	1158	128.870	.400	1.15	1.15	150	100	87	7.0		68
B-18	129.0	1201	130.835	.380	1.10	1.10	150	100	88	6.8		68
B-17	132.0	1204	132.760	.360	1.05	1.05	150	100	88	6.5		68
B-16	135.0	1207	134.525	.340	.99	.99	150	101	89	6.0		69
B-15	138.0	1210	136.320	.270	.78	.78	150	101	90	5.0		68
B-14	141.0	1213	137.885	.230	.67	.67	149	100	90	5.0		68
B-13	144.0	1216	139.212	.160	.48	.48	149	98	90	4.0		68
TOTALS	144.0		106.735									
AVERAGE					1.53	1.50	151	90	79	7.8		65

PLANT I.M.C. KINGSFORD, FLA.
SAMPLING LOCATION ROCK DRYING-OUTLET

DATE 02/14/73
RUN NUMBER 4

DRY MOLECULAR WEIGHT DETERMINATION

GAS	VOL. PERCENT DRY BASIS
CO2	
O2	
CO	
N2	
TOTAL	
DRY MOLECULAR WEIGHT,LB/LB-MOLE	29.00

MOISTURE CONTENT DETERMINATION

IMPINGER MOISTURE,ML	725.0
SILICA MOISTURE,ML	36.0
TOTAL MOISTURE,ML	761.0
WATER VAPOR COLLECTED, STD. CU. FT.	36.071
GAS METER VOL.,CU.FT.	
GROSS TOTAL	106.735
LESS LEAKAGE CORR	.000
NET TOTAL	106.735
DRY GAS VOL. THROUGH METER,STD. CU. FT	105.672
MOISTURE CONTENT, VOL. FRACTION	.2545

STACK GAS VELOCITY AND VOLUME DETERMINATION

STACK AREA,SQ. FT.	38.027
PITOT TUBE COEFFICIENT	.83
STACK ABS.PRESS.,IN.HG	30.28
STACK GAS TEMPERATURE,DEG.F	151
STACK GAS MOL. WT.,WET BASIS	26.20
SQRT(VEL HD X STACK TEMP ABS)	17.6
STACK GAS VELOCITY, ACT. FPS	44.4
STACK GAS VOLUME,STD CFM,	
WET BASIS	98966.3
DRY BASIS	66251.2

ISOKINETIC VARIATION

PERCENT OF ISOKINETIC SAMPLING	100.6

EMISSION DATA

SAMPLE	WATER SOL. FLUORIDE	TOTAL
WEIGHT,MG	5.6000	7.9000
STD CONC,GR/SCF	.00081	.00115
ACT CONC,GR/ACF	.00053	.00075
EMISSION RATE,LB/HR	.464	.655
THROUGHPUT, TON/HR	270.0000	
EMISSION FACTOR,LB/TON	.001	.002

FIELD DATA

PLANT	I.M.C. KINGSFORD, FLA.	DATE	02/14/73
SAMPLING LOCATION	INLET-ROCK DRYER	RUN NUMBER	5
SAMPLE TYPE	FLUORIDES	PROBE LENGTH AND TYPE	6FT GLASS
OPERATOR	R. GERSTLE	NOZZLE I.D.	.1800
AMBIENT TEMP.(DEG.F)	70	ASSUMED MOISTURE	32
BAR.PRESS.(IN.HG)	30.28	SAMPLE BOX NUMBER	
STATIC PRESS(IN.H2O)	6.00	METER BOX NUMBER	4
FILTER NUMBER(S)	273004	METER HEAD DIFF.	1.67
STACK INSIDE DIM(IN)	72.000 X 56.500	C FACTOR	.53
PITOT TUBE COEFF	.83	PROBE HEATER SETTING	80
		HEATER BOX SETTING	
READ AND RECORD DATA EVERY 3.0 MINUTES		REFERENCE PRESS DIFF.	3.65

TRAVERSE POINT NO.	SAMPLE TIME (MIN.)	CLOCK TIME (24-HR CLOCK)	GAS METER READING (CU.FT.)	VELOCITY HEAD (IN.H2O)	ORIFICE PRESSURE DIFFERENTIAL (IN.H2O)		STACK TEMP (DEG.F)	DRY GAS METER TEMP (DEG.F)		PUMP VACUUM (IN.HG)	SAMPLE BOX TEMP (DEG.F)	IMPINGER TEMP (DEG.F)
					DESIRED	ACTUAL		INLET	OUTLET			
INIT	0	1343	703.513									
E-1	3.0		704.850	1.100	.58	.58		80	78	5.0		60
E-2	6.0		706.320	1.450	.76	.76	164	80	80	5.0		60
E-3	9.0		707.800	1.300	.69	.69	164	82	79	5.0		59
E-4	12.0		709.210	1.250	.66	.66	164	82	79	5.0		59
E-5	15.0		710.620	1.250	.66	.66	164	82	79	5.0		59
E-6	18.0		712.050	1.300	.69	.69	164	82	80	5.0		59
E-7	21.0		713.560	1.400	.73	.73	164	84	80	5.0		61
E-8	24.0		715.160	1.650	.87	.87	164	86	80	5.5		61
E-9	27.0		716.930	2.000	1.05	1.05	164	88	80	6.5		60
E-10	30.0		718.780	2.250	1.20	1.20	164	88	80	7.0		63
D-1	33.0	1416	718.780	.000	.00	.00	164	88	80	.0		
D-2	36.0		719.045	.650	.35	.35	164	84	80	5.0		63
D-3	39.0		721.380	1.500	.78	.78	164	84	80	5.0		63
D-4	42.0		722.840	1.300	.69	.69	164	84	80	5.0		62
D-5	45.0		724.180	1.050	.55	.55	164	85	80	5.0		63
D-6	48.0		725.460	1.000	.52	.52	164	85	80	5.0		64
D-7	51.0		726.870	1.200	.64	.64	164	86	80	5.0		65
D-8	54.0		728.410	1.500	.78	.78	164	87	80	5.0		64
D-9	57.0		730.240	2.200	1.15	1.15	164	90	80	7.0		65
D-10	60.0		731.420	.750	.40	.40	164	90	81	5.0		65
C-1	63.0	1447	732.275	.460	.25	.25	164	84	80	5.0		65
C-2	66.0		733.850	1.600	.85	.85	164	86	82	6.0		65
C-3	69.0		735.420	1.500	.79	.79	164	88	82	6.0		65
C-4	72.0		736.910	1.300	.69	.69	164	88	82	5.0		65
C-5	75.0		738.360	1.200	.63	.63	164	88	82	5.5		66
C-6	78.0		739.750	1.200	.63	.63	164	88	82	5.5		66
C-7	81.0		741.110	1.100	.58	.58	164	90	82	5.0		65

PLANT: I.M.C. KINGSFORD, FLA. | DATE: 02/14/73

SAMPLING LOCATION: INLET-ROCK DRYER | RUN NUMBER: 5

TRAVERSE POINT NO.	SAMPLE TIME (MIN.)	CLOCK TIME (24-HR CLOCK)	GAS METER READING (CU.FT.)	VELOCITY HEAD (IN.H2O)	ORIFICE PRESSURE DIFFERENTIAL (IN.H2O)		STACK TEMP (DEG.F)	DRY GAS METER TEMP (DEG.F)		PUMP VACUUM (IN.HG)	SAMPLE BOX TEMP (DEG.F)	IMPINGER TEMP (DEG.F)
					DESIRED	ACTUAL		INLET	OUTLET			
C-8	84.0		742.640	1.450	.76	.76	164	90	82	5.0		65
C-9	87.0		744.450	2.000	1.05	1.05	164	90	82	7.2		66
C-10	90.0		745.230	.230	.12	.12	164	90	82	5.0		66
B-1	93.0	1532	745.230	.000	.00	.00	164					66
B-2	96.0		746.900	1.800	.95	.95	164	84	82	5.5		
B-3	99.0		748.570	1.600	.87	.87	164	84	82	6.0		71
B-4	102.0		750.600	1.400	.74	.74	164	86	82	5.5		67
B-5	105.0		752.120	1.400	.74	.74	164	87	82	5.5		63
B-6	108.0		753.150	1.500	.79	.79	164	88	82	5.5		66
B-7	111.0		754.730	1.500	.79	.79	164	88	82	5.5		65
B-8	114.0		756.340	1.650	.88	.88	164	89	82	6.0		63
B-9	117.0		758.000	1.600	.85	.85	164	90	82	6.0		64
B-10	120.0		758.495	.100	.06	.06	164	88	82	5.0		64
A-1	123.0	1606	758.560	.080	.04	.04	164	82	81	5.0		66
A-2	126.0		759.960	1.350	.71	.71	164	83	81	6.0		74
A-3	129.0		761.540	1.500	.79	.79	164	86	82	6.0		62
A-4	132.0		763.100	1.500	.79	.79	164	87	82	6.0		59
A-5	135.0		764.650	1.400	.74	.74	164	88	82	6.0		60
A-6	138.0		766.120	1.300	.69	.69	164	88	82	6.0		63
A-7	141.0		767.580	1.300	.69	.69	164	89	82	6.0		64
A-8	144.0		768.820	.890	.47	.47	164	88	82	5.0		65
A-9	147.0	1633	769.490	.250	.13	.13	164	84	82	5.0		66
A-10	150.0		769.510	.000	.00	.00	164			.0		68
TOTALS	150.0		65.997									
AVERAGE					.64	.64	164	86	81	5.3		64

PLANT: I.M.C. KINGSFORD, FLA.
SAMPLING LOCATION: INLET-ROCK DRYER
DATE: 02/14/73
RUN NUMBER: 5

DRY MOLECULAR WEIGHT DETERMINATION

GAS	VOL. PERCENT DRY BASIS
CO2	
O2	
CO	
N2	
TOTAL	
DRY MOLECULAR WEIGHT, LB/LB-MOLE	29.00

MOISTURE CONTENT DETERMINATION

IMPINGER MOISTURE, ML	638.0
SILICA MOISTURE, ML	18.2
TOTAL MOISTURE, ML	656.2
WATER VAPOR COLLECTED, STD. CU. FT.	31.104
GAS METER VOL., CU.FT.	
GROSS TOTAL	65.997
LESS LEAKAGE CORR	.000
NET TOTAL	65.997
DRY GAS VOL. THROUGH METER, STD. CU. FT	65.280
MOISTURE CONTENT, VOL. FRACTION	.3227

STACK GAS VELOCITY AND VOLUME DETERMINATION

STACK AREA, SQ. FT.	28.250
PITOT TUBE COEFFICIENT	.83
STACK ABS. PRESS., IN.HG	30.72
STACK GAS TEMPERATURE, DEG.F	164
STACK GAS MOL. WT., WET BASIS	25.45
SQRT(VEL HD X STACK TEMP ABS)	25.8
STACK GAS VELOCITY, ACT. FPS	65.6
STACK GAS VOLUME, STD CFM,	
WET BASIS	96917.4
DRY BASIS	65641.2

ISOKINETIC VARIATION

PERCENT OF ISOKINETIC SAMPLING	105.9

EMISSION DATA

SAMPLE	WATER SOL. FLUORIDE	TOTAL
WEIGHT, MG	5.7000	189.6000
STD CONC, GR/SCF	.00134	.04482
ACT CONC, GR/ACF	.00079	.02647
EMISSION RATE, LB/HR	.758	25.218
THROUGHPUT, TON/HR	300.0000	
EMISSION FACTOR, LB/TON	.002	.084

FIELD DATA

PLANT	I.M.F. KINGSFORD, FLA.	DATE	02/14/73
SAMPLING LOCATION	ROCK DRYER-OUTLET	RUN NUMBER	5
SAMPLE TYPE	FLUORIDES	PROBE LENGTH AND TYPE	4FT
OPERATOR	O'CONNOR-MEER	NOZZLE I.D.	.2770
AMBIENT TEMP.(DEG.F)	60	ASSUMED MOISTURE	30
BAR.PRESS.(IN.HG)	30.28	SAMPLE BOX NUMBER	3
STATIC PRESS(IN.H2O)	-.21	METER BOX NUMBER	5
FILTER NUMBER(S)	273005,273006	METER HEAD DIFF.	1.49
STACK INSIDE DIM(IN)	83.500	C FACTOR	52
PITOT TUBE COEFF	.83	PROBE HEATER SETTING	80
		HEATER BOX SETTING	
READ AND RECORD DATA EVERY 3.0 MINUTES		REFERENCE PRESS DIFF.	.65

TRAVERSE POINT NO.	SAMPLE TIME (MIN.)	CLOCK TIME (24-HR CLOCK)	GAS METER READING (CU.FT.)	VELOCITY HEAD (IN.H2O)	ORIFICE PRESSURE DIFFERENTIAL (IN.H2O)		STACK TEMP (DEG.F)	DRY GAS METER TEMP (DEG.F)		PUMP VACUUM (IN.HG)	SAMPLE BOX TEMP (DEG.F)	IMPINGER TEMP (DEG.F)
					DESIRED	ACTUAL		INLET	OUTLET			
INIT	0	1330	139.378									
A-12	3.0	1333	141.125	.260	.74	.74	150	78	78	2.0		71
A-11	6.0	1336	142.970	.380	1.09	1.10	150	80	79	3.0		64
A-10	9.0	1339	145.070	.530	1.50	1.50	150	84	79	3.0		64
A-9	12.0	1342	147.575	.680	1.92	1.92	150	88	80	6.0		64
A-8	15.0	1345	150.265	.800	2.20	2.20	150	93	80	7.0		66
A-7	18.0	1348	153.100	.870	2.45	2.45	150	98	81	8.0		66
A-6	21.0	1351	155.980	.900	2.50	2.50	150	100	82	8.0		74
A-5	24.0	1354	158.870	.850	2.39	2.40	150	102	83	8.5		76
A-4	27.0	1357	161.690	.830	2.33	2.35	150	104	84	9.0		76
A-3	30.0	1400	164.425	.770	2.18	2.18	150	106	85	9.0		77
A-2	33.0	1403	167.060	.700	1.99	2.00	150	106	86	8.5		78
A-1	36.0	1406	169.439	.550	1.55	1.55	150	106	87	7.5		78
A-24	39.0	1421	171.870	.620	1.75	1.75	150	91	85	8.0		66
A-23	42.0	1424	174.615	.600	1.71	1.70	150	94	86	9.0		68
A-22	45.0	1427	176.675	.590	1.68	1.68	150	96	86	8.0		70
A-21	48.0	1430	179.025	.560	1.60	1.60	150	100	87	8.0		71
A-20	51.0	1433	181.300	.500	1.45	1.45	150	101	87	7.5		73
A-19	54.0	1436	183.525	.480	1.38	1.40	150	101	88	7.5		74
A-18	57.0	1439	185.680	.420	1.22	1.22	150	100	88	7.0		74
A-17	60.0	1442	187.645	.350	1.00	1.00	150	101	89	6.0		74
A-16	63.0	1445	189.480	.320	.93	.93	150	101	89	4.0		74
A-15	66.0	1448	191.120	.250	.73	.73	150	102	90	4.0		74
A-14	69.0	1451	192.610	.200	.59	.59	150	102	91	3.0		74
A-13	72.0	1454	193.868	.130	.40	.40	150	101	91	3.0		74
B-24	75.0	1512	195.750	.420	1.20	1.20	150	88	87	3.5		62
B-23	78.0	1515	197.770	.420	1.20	1.20	150	89	88	3.5		62
B-22	81.0	1518	199.830	.440	1.28	1.28	150	91	88	4.0		65

PLANT: I.M.F. KINGSFORD, FLA.
SAMPLING LOCATION: ROCK DRYER-OUTLET
DATE: 02/14/73
RUN NUMBER: 5

TRAVERSE POINT NO.	SAMPLE TIME (MIN.)	CLOCK TIME (24-HR CLOCK)	GAS METER READING (CU.FT.)	VELOCITY HEAD (IN.H2O)	ORIFICE PRESSURE DIFFERENTIAL (IN.H2O)		STACK TEMP (DEG.F)	DRY GAS METER TEMP (DEG.F)		PUMP VACUUM (IN.HG)	SAMPLE BOX TEMP (DEG.F)	IMPINGER TEMP (DEG.F)
					DESIRED	ACTUAL		INLET	OUTLET			
B-21	84.0	1521	201.905	.440	1.28	1.28	150	92	88	4.0		66
B-20	87.0	1524	203.930	.420	1.20	1.20	150	93	87	4.0		67
B-19	90.0	1527	205.890	.400	1.16	1.16	150	94	87	4.0		67
B-18	93.0	1530	207.830	.400	1.16	1.16	150	94	87	4.0		68
B-17	96.0	1533	209.705	.380	1.10	1.10	150	94	87	4.0		70
B-16	99.0	1536	211.540	.340	.98	.98	150	94	87	4.0		70
B-15	102.0	1539	213.240	.290	.84	.84	150	96	87	3.5		70
B-14	105.0	1542	214.750	.240	.70	.70	150	97	88	3.5		70
B-13	108.0	1545	216.341	.170	.50	.50	150	98	88	3.5		70
B-12	111.0	1558	217.985	.280	.80	.80	150	91	87	4.0		70
B-11	114.0	1601	220.995	.280	.80	.80	150	91	88	4.0		70
B-10	117.0	1623	222.240	.780	2.20	2.20	150	84	84	7.5		70
B-9	120.0	1626	224.670	.750	2.12	2.12	150	87	84	7.5		60
B-8	123.0	1629	227.540	.880	2.48	2.48	150	91	84	8.8		65
B-7	126.0	1632	230.630	.920	2.60	2.60	150	94	84	9.0		67
B-6	129.0	1635	233.390	.900	2.52	2.52	150	98	84	9.0		69
B-5	132.0	1638	236.350	.920	2.60	2.60	150	100	84	9.5		70
B-4	135.0	1641	239.310	.880	2.48	2.48	150	103	85	9.0		71
B-3	138.0	1644	242.185	.830	2.35	2.35	150	104	86	9.0		71
B-2	141.0	1647	245.020	.800	2.25	2.25	150	106	86	9.0		71
B-1	144.1	1650	247.788	.750	2.10	2.10	150	105	87	8.5		71
TOTALS	144.1		108.410									
AVERAGE					1.57	1.57	150	96	86	6.1		70

PLANT I.M.P. KINGSFORD, FLA.
SAMPLING LOCATION ROCK DRYER-OUTLET

DATE 02/14/73
RUN NUMBER 5

DRY MOLECULAR WEIGHT DETERMINATION

GAS	VOL. PERCENT DRY BASIS
CO2	
O2	
CO	
N2	
TOTAL	
DRY MOLECULAR WEIGHT,LB/LB-MOLE	29.00

MOISTURE CONTENT DETERMINATION

IMPINGER MOISTURE,ML	702.0
SILICA MOISTURE,ML	39.7
TOTAL MOISTURE,ML	741.7
WATER VAPOR COLLECTED, STD. CU. FT.	35.157
GAS METER VOL.,CU.FT.	
GROSS TOTAL	108.410
LESS LEAKAGE CORR	.000
NET TOTAL	108.410
DRY GAS VOL. THROUGH METER,STD. CU. FT	105.913
MOISTURE CONTENT, VOL. FRACTION	.2492

STACK GAS VELOCITY AND VOLUME DETERMINATION

STACK AREA,SQ. FT.	38.027
PITOT TUBE COEFFICIENT	.83
STACK ABS.PRESS.,IN.HG	30.26
STACK GAS TEMPERATURE,DEG.F	150
STACK GAS MOL. WT.,WET BASIS	26.26
SQRT(VEL HD X STACK TEMP ABS)	17.9
STACK GAS VELOCITY, ACT. FPS	45.0
STACK GAS VOLUME,STD CFM,	
WET BASIS	90171.8
DRY BASIS	67699.7

ISOKINETIC VARIATION

PERCENT OF ISOKINETIC SAMPLING	98.6

EMISSION DATA

SAMPLE	WATER SOL. FLUORIDE	TOTAL
WEIGHT,MG	6.3000	57.4000
STD CONC,GR/SCF	.00091	.00982
ACT CONC,GR/ACF	.00060	.00648
EMISSION RATE,LB/HR	.532	5.698
THROUGHPUT, TON/HR	300.0000	
EMISSION FACTOR,LB/TON	.001	.018

FIELD DATA

PLANT	I.M.C. KINGSFORD, FLA.	DATE	02/15/73
SAMPLING LOCATION	INLET-ROCK DRYER	RUN NUMBER	6
SAMPLE TYPE	FLUORIDES	PROBE LENGTH AND TYPE	6FT GLASS-HEATED
OPERATOR	N.K. & G.P.	NOZZLE I.D.	.1800
AMBIENT TEMP.(DEG.F)	75	ASSUMED MOISTURE	32
BAR.PRESS.(IN.HG)	30.19	SAMPLE BOX NUMBER	
STATIC PRESS(IN.H2O)	6.00	METER BOX NUMBER	4
FILTER NUMBER(S)	273009,273040	METER HEAD DIFF.	1.67
STACK INSIDE DIM(IN)	72.000 X 56.500	C FACTOR	0.52
PITOT TUBE COEFF	.83	PROBE HEATER SETTING	80
		HEATER BOX SETTING	
READ AND RECORD DATA EVERY 3.0 MINUTES		REFERENCE PRESS DIFF.	3.65

TRAVERSE POINT NO.	SAMPLE TIME (MIN.)	CLOCK TIME (24-HR CLOCK)	GAS METER READING (CU.FT.)	VELOCITY HEAD (IN.H2O)	ORIFICE PRESSURE DIFFERENTIAL (IN.H2O)		STACK TEMP (DEG.F)	DRY GAS METER TEMP (DEG.F)		PUMP VACUUM (IN.HG)	SAMPLE BOX TEMP (DEG.F)	IMPINGER TEMP (DEG.F)
					DESIRED	ACTUAL		INLET	OUTLET			
INIT	0	0905	769.580									
A-1	3.0			.000	.00	.00	164	80	80	5.5		69
A-2	6.0			1.150	.60	.60	164	80	80	5.5		69
A-3	9.0		776.130	1.900	.96	.96	164	80	80	5.0		70
A-4	12.0		777.730	1.600	.85	.85	164	80	80	5.0		70
A-5	15.0		779.260	1.500	.78	.78	164	79	78	5.0		70
A-6	18.0	0930	780.650	1.100	.59	.59	164	79	76	5.0		69
A-7	21.0		781.510	.990	.53	.53	164	79	75	5.0		69
A-8	24.0		782.790	.430	.23	.23	164	78	74	5.0		70
A-9	27.0		783.100	.250	.04	.04	164	77	74	5.0		67
A-10	30.0		783.100	.000	.00	.00	164	77	74	5.0		66
B-1	33.0	0950	783.100	.000	.00	.00	164	77	74	5.0		74
B-2	36.0		785.010	2.100	1.10	1.10	164	75	73	6.0		73
B-3	39.0		786.680	1.650	.87	.87	164	77	73	5.0		69
B-4	42.0		788.210	1.450	.76	.76	164	79	73	5.0		69
B-5	45.0		789.680	1.300	.69	.69	164	79	73	5.0		68
B-6	48.0		791.200	1.450	.76	.76	164	80	73	5.0		69
B-7	51.0		792.770	1.550	.80	.80	164	80	73	5.0		69
B-8	54.0		794.510	1.950	1.00	1.00	164	81	73	5.5		69
B-9	57.0		795.890	1.100	.58	.58	164	81	73	5.0		62
B-10	60.0		796.230	.120	.07	.07	164	81	73	5.0		68
C-1	63.0	1030	793.230	.000	.00	.00	164	75	72	8.0		
C-2	66.0		797.950	1.850	.97	.97	164	75	72	8.0		63
C-3	69.0		799.470	1.450	.75	.75	164	78	73	6.5		64
C-4	72.0		800.870	1.200	.63	.63	164	80	74	6.0		63
C-5	75.0		802.240	1.150	.61	.61	164	80	74	6.0		62
C-6	78.0		803.630	1.200	.63	.63	164	80	74	6.0		62
C-7	81.0		805.100	1.350	.71	.71	164	81	74	6.5		61

PRINTED IN U.S.A.

PLANT I.M.C. KINGSFORD, FLA. DATE 02/15/73
SAMPLING LOCATION INLET-ROCK DRYER RUN NUMBER 6

TRAVERSE POINT NO.	SAMPLE TIME (MIN.)	CLOCK TIME (24-HR CLOCK)	GAS METER READING (CU.FT.)	VELOCITY HEAD (IN.H2O)	ORIFICE PRESSURE DIFFERENTIAL (IN.H2O)		STACK TEMP (DEG.F)	DRY GAS METER TEMP (DEG.F)		PUMP VACUUM (IN.HG)	SAMPLE BOX TEMP (DEG.F)	IMPINGER TEMP (DEG.F)
					DESIRED	ACTUAL		INLET	OUTLET			
C-8	84.0		806.800	1.800	.93	.93	164	81	74	6.5		61
C-9	87.0		808.230	1.300	.69	.69	164	83	75	6.5		64
C-10	90.0		808.230	.000	.00	.00	164	83	75	6.5		64
D-1	93.0	1110	808.230	.000	.00	.00	164	75	74			70
D-2	96.0		809.590	.910	.49	.49	164	75	74	5.0		65
D-3	99.0		811.100	1.500	.79	.79	164	77	75	5.5		64
D-4	102.0		812.540	1.300	.69	.69	164	79	75	5.0		64
D-5	105.0		813.930	1.150	.62	.62	164	80	75	5.0		65
D-6	108.0		815.200	1.000	.53	.53	164	80	75	5.0		65
D-7	111.0		816.600	1.200	.63	.63	164	80	75	5.0		64
D-8	114.0		818.110	1.450	.75	.75	164	80	75	5.0		64
D-9	117.0		819.900	2.150	1.13	1.13	164	81	75	6.5		65
D-10	120.0	1140	821.620	1.850	.96	.96	164	82	75	6.5		64
E-1	123.0	1150	821.620	.000	.00	.00	164	75	74			65
E-2	126.0	1158	822.780	1.500	.78	.78	164	75	74	5.0		64
E-3	129.0		824.220	1.250	.66	.66	164	76	74	5.0		63
E-4	132.0		825.640	1.250	.66	.66	164	77	74	5.0		63
E-5	135.0		827.100	1.300	.69	.69	164	78	74	5.0		64
E-6	138.0		828.570	1.350	.71	.71	164	80	74	5.0		64
E-7	141.0		830.200	1.500	.88	.88	164	80	75	5.0		63
E-8	144.0		831.910	1.800	.93	.93	164	81	75	5.0		64
E-9	147.0		833.780	2.200	1.14	1.14	164	82	75	6.5		63
E-10	150.0	1225	835.517	2.000	1.05	1.05	164	83	75	6.5		65
TOTALS	150.0		65.937									
AVERAGE					.62	.62	164	79	75	5.5		65

PLANT	I.M.C. KINGSFORD, FLA.	DATE	02/15/73
SAMPLING LOCATION	INLET-ROCK DRYER	RUN NUMBER	6

DRY MOLECULAR WEIGHT DETERMINATION

GAS	VOL. PERCENT DRY BASIS
CO2	
O2	
CO	
N2	
TOTAL	
DRY MOLECULAR WEIGHT,LB/LB-MOLE	29.00

MOISTURE CONTENT DETERMINATION

IMPINGER MOISTURE,ML	577.0
SILICA MOISTURE,ML	23.8
TOTAL MOISTURE,ML	600.8
WATER VAPOR COLLECTED, STD. CU. FT.	28.478
GAS METER VOL.,CU.FT.	
GROSS TOTAL	65.937
LESS LEAKAGE CORR	.000
NET TOTAL	65.937
DRY GAS VOL. THROUGH METER,STD. CU. FT	65.751
MOISTURE CONTENT, VOL. FRACTION	.3022

STACK GAS VELOCITY AND VOLUME DETERMINATION

STACK AREA,SQ. FT.	28.250
PITOT TUBE COEFFICIENT	.83
STACK ABS.PRESS.,IN.HG	30.53
STACK GAS TEMPERATURE,DEG.F	164
STACK GAS MOL. WT.,WET BASIS	25.68
SQRT(VEL HD X STACK TEMP ABS)	24.8
STACK GAS VELOCITY, ACT. FPS	62.7
STACK GAS VOLUME,STD CFM,	
WET BASIS	92448.0
DRY BASIS	64508.4

ISOKINETIC VARIATION

PERCENT OF ISOKINETIC SAMPLING	108.5

EMISSION DATA

SAMPLE	WATER SOL. FLUORIDE	TOTAL
WEIGHT,MG	2.6000	171.9000
STD CONC,GR/SCF	.00061	.04034
ACT CONC,GR/ACF	.00037	.02448
EMISSION RATE,LB/HR	.337	22.308
THROUGHPUT, TON/HR	315.0000	
EMISSION FACTOR,LB/TON	.001	.070

PLANT	I.M.C. KINGSFORD, FLA.	DATE	02/15/73
SAMPLING LOCATION	ROCK DRYER-OUTLET	RUN NUMBER	6
SAMPLE TYPE	FLUORIDES	PROBE LENGTH AND TYPE	8FT GLASS-HEATED
OPERATOR	O'CONNOR-MEER	NOZZLE I.D.	.2770
AMBIENT TEMP.(DEG.F)	72	ASSUMED MOISTURE	30
BAR.PRESS.(IN.HG)	30.19	SAMPLE BOX NUMBER	3
STATIC PRESS(IN.H2O)	-.21	METER BOX NUMBER	5
FILTER NUMBER(S)	73007,73008	METER HEAD DIFF.	1.49
STACK INSIDE DIM(IN)	83.500	C FACTOR	.51
PITOT TUBE COEFF	.83	PROBE HEATER SETTING	80
		HEATER BOX SETTING	
READ AND RECORD DATA EVERY 3.0 MINUTES		REFERENCE PRESS DIFF.	.66

TRAVERSE POINT NO.	SAMPLE TIME (MIN.)	CLOCK TIME (24-HR CLOCK)	GAS METER READING (CU.FT.)	VELOCITY HEAD (IN.H2O)	ORIFICE PRESSURE DIFFERENTIAL (IN.H2O)		STACK TEMP (DEG.F)	DRY GAS METER TEMP (DEG.F)		PUMP VACUUM (IN.HG)	SAMPLE BOX TEMP (DEG.F)	IMPINGER TEMP (DEG.F)
					DESIRED	ACTUAL		INLET	OUTLET			
INIT	0	0850	248.038									
A-24	3.0	0853	250.530	.650	1.80	1.80	151	71	69	5.0		64
A-23	6.0	0856	252.935	.630	1.75	1.75	151	74	60	6.0		60
A-22	9.0	0859	255.375	.630	1.75	1.75	151	78	70	6.5		62
A-21	12.0	0902	257.820	.590	1.65	1.65	151	82	71	6.5		71
A-20	15.0	0905	260.040	.560	1.55	1.55	151	85	72	6.0		88
A-19	18.0	0908	262.290	.530	1.49	1.49	151	86	73	6.0		87
A-18	21.0	0911	264.450	.500	1.40	1.40	151	87	74	9.0		84
A-17	24.0	0914	266.585	.450	1.27	1.27	151	87	75	8.5		79
A-16	27.0	0917	268.650	.390	1.10	1.10	150	88	75	7.0		75
A-15	30.0	0920	270.395	.300	.85	.85	150	87	76	6.0		70
A-14	33.0	0923	271.920	.230	.65	.65	150	87	76	5.5		66
A-13	36.0	0926	273.178	.150	.44	.44	150	86	76	5.0		63
A-12	39.0	0938	274.785	.280	.79	.79	150	76	75	5.5		58
A-11	42.0	0941	276.635	.390	1.10	1.10	150	78	76	7.0		56
A-10	45.0	0944	278.975	.530	1.49	1.49	150	82	76	9.0		55
A-9	48.0	0947	281.340	.680	1.88	1.88	150	87	76	10.0		57
A-8	51.0	0950	284.065	.800	2.20	2.20	150	91	77	11.0		58
A-7	54.0	0953	286.890	.850	2.37	2.37	150	95	77	12.0		58
A-6	57.0	0956	289.760	.880	2.40	2.40	150	97	78	12.5		58
A-5	60.0	0959	292.550	.840	2.30	2.30	150	99	79	12.3		58
A-4	63.0	1002	295.330	.820	2.25	2.25	150	100	80	12.5		58
A-3	66.0	1005	298.055	.750	2.10	2.10	150	101	80	12.8		58
A-2	69.0	1008	300.710	.700	1.91	1.91	150	102	81	12.0		60
A-1	72.0	1011	303.043	.600	1.68	1.68	150	102	82	10.5		60
B-12	75.0	1028	304.835	.300	.85	.85	150	77	77	3.0		60
B-11	78.0	1031	306.715	.400	1.12	1.12	150	79	78	4.0		55
B-10	81.0	1034	308.940	.540	1.51	1.51	150	84	79	5.0		55

PLANT: I.M.C. KINGSFORD, FLA.
SAMPLING LOCATION: ROCK DRYER-OUTLET
DATE: 02/15/73
RUN NUMBER: 6

TRAVERSE POINT NO.	SAMPLE TIME (MIN.)	CLOCK TIME (24-HR CLOCK)	GAS METER READING (CU.FT.)	VELOCITY HEAD (IN.H2O)	ORIFICE PRESSURE DIFFERENTIAL (IN.H2O)		STACK TEMP (DEG.F)	DRY GAS METER TEMP (DEG.F)		PUMP VACUUM (IN.HG)	SAMPLE BOX TEMP (DEG.F)	IMPINGER TEMP (DEG.F)
					DESIRED	ACTUAL		INLET	OUTLET			
B-9	84.0	1037	311.420	.720	2.00	2.00	150	88	80	7.0		56
B-8	87.0	1040	314.150	.820	2.25	2.25	150	92	80	7.0		57
B-7	90.0	1043	316.980	.880	2.40	2.40	150	94	80	8.0		58
B-6	93.0	1046	319.905	.910	2.50	2.50	150	99	81	8.0		60
B-5	96.0	1050	322.840	.920	2.52	2.52	150	102	83	8.5		62
B-4	99.0	1052	325.780	.920	2.52	2.52	150	102	83	8.7		63
B-3	102.0	1055	328.675	.880	2.40	2.40	150	103	84	8.7		64
B-2	105.0	1058	331.545	.850	2.35	2.35	150	103	85	8.5		64
B-1	108.0	1101	334.208	.700	1.94	1.94	150	102	85	7.5		64
B-24	111.0	1114	336.390	.450	1.25	1.25	150	83	81	5.5		58
B-23	114.0	1117	338.545	.470	1.30	1.30	150	85	82	6.0		58
B-22	117.0	1120	340.695	.450	1.25	1.25	150	86	82	6.0		59
B-21	120.0	1123	342.800	.420	1.18	1.18	150	88	81	6.0		60
B-20	123.0	1126	344.870	.440	1.23	1.23	150	90	81	6.0		63
B-19	126.0	1129	346.935	.420	1.18	1.18	150	92	82	6.0		62
B-18	129.0	1132	348.870	.380	1.06	1.06	150	92	82	5.5		62
B-17	132.0	1135	350.810	.360	1.01	1.01	154	92	82	5.0		62
B-16	135.0	1138	352.590	.340	.96	.96	154	94	83	5.0		62
B-15	138.0	1141	354.285	.290	.82	.82	154	95	84	5.0		62
B-14	141.0	1144	355.845	.230	.64	.64	154	94	85	4.5		62
B-13	144.0	1147	357.159	.160	.46	.46	154	93	85	4.0		62
TOTALS	144.0		109.121									
AVERAGE					1.56	1.56	151	90	79	7.3		63

PLANT	I.M.C. KINGSFORD, FLA.	DATE	02/15/73
SAMPLING LOCATION	ROCK DRYER-OUTLET	RUN NUMBER	6

DRY MOLECULAR WEIGHT DETERMINATION

GAS	VOL. PERCENT DRY BASIS
CO2	
O2	
CO	
N2	
TOTAL	
DRY MOLECULAR WEIGHT,LB/LB-MOLE	29.00

MOISTURE CONTENT DETERMINATION

IMPINGER MOISTURE,ML	825.0
SILICA MOISTURE,ML	42.7
TOTAL MOISTURE,ML	867.7
WATER VAPOR COLLECTED, STD. CU. FT.	41.129
GAS METER VOL.,CU.FT.	
GROSS TOTAL	109.121
LESS LEAKAGE CORR	.000
NET TOTAL	109.121
DRY GAS VOL. THROUGH METER,STD. CU. FT	107.658
MOISTURE CONTENT, VOL. FRACTION	.2764

STACK GAS VELOCITY AND VOLUME DETERMINATION

STACK AREA,SQ. FT.	38.027
PITOT TUBE COEFFICIENT	.83
STACK ABS.PRESS.,IN.HG	30.17
STACK GAS TEMPERATURE,DEG.F	151
STACK GAS MOL. WT.,WET BASIS	25.96
SQRT(VEL HD X STACK TEMP ABS)	18.1
STACK GAS VELOCITY, ACT. FPS	45.9
STACK GAS VOLUME,STD CFM,	
WET BASIS	91645.5
DRY BASIS	66312.0

ISOKINETIC VARIATION

PERCENT OF ISOKINETIC SAMPLING	102.4

EMISSION DATA

SAMPLE	WATER SOL. FLUORIDE	TOTAL
WEIGHT,MG	2.2000	6.9000
STD CONC,GR/SCF	.00031	.00098
ACT CONC,GR/ACF	.00019	.00062
EMISSION RATE,LB/HR	.179	.562
THROUGHPUT, TON/HR	315.0000	
EMISSION FACTOR,LB/TON	.000	.001

Appendix E. Sampling Procedures

The general test procedure is described in Section VII. Each individual test is presented here in more detail.

A 30 minute moisture run was ran on February 12, 1973, at the rock drying inlet site. Orifice pressure differential was held constant at 0.75 inches of water for 30 minutes, or approximately 0.5 cubic feet per minute. Approximately 165 ml. of water was collected; this represented a moisture content of about 32 percent at the inlet to the scrubber.

Table E1 presents the sampling times for each run. Prior to sampling it was anticipated that since four changes were needed at the inlet versus one for the outlet, the inlet test would run longer unless actual sampling times were decreased. As the tests were run it became evident that outlet sampling took longer than originally planned. The sample time per port was increased so that inlet and outlet sampling teams finished at approximately the same time.

Pertinent items or problems that arose are discussed below. In general, there was no major trouble with the process or sampling techniques.

TABLE E1. SAMPLING TIMES FOR ROCK DRYING OPERATION

Test	Pollutant	Sampling Points	Time Per Point (minutes)	Total Duration (minutes)
1I	Particulate	50	2	100
10		48	3	144
2I		50	2.5	125
20		48	3	144
3I		50	2.5	125
30		48	3	144
4I	Fluorides	50	3	150
40		48	3	144
5I		50	3	150
50		48	3	144
6I		50	3	150
60		48	3	144

Run 1 - Inlet and outlet tests completed without problems. The outlet sample box was taken back to the motel after the test and modified to make easier access into sampling ports.

Run 2 - Approximately midway through test the conveyor belt carrying finished rock product broke causing a down time of about 90 minutes. The belt was repaired and after process stabilization, the outlet meter box flow was irregular. Outlet testing was stopped to replace the meter box.

Run 3 - No problems arose with the process or testing of the dryer. The motor was replaced in the outlet sample box used for Run 2.

Run 4 - The first impinger on the inlet train was replaced after it was completely full. The inlet train was shut off for 15 minutes to let the outlet sampling "catch up" and ultimately result in both trains to finish at approximately the same time.

Run 5 - Testing was performed without complications.

Run 6 - The probe nozzle contacted the mud surrounding the duct walls upon traversing the final port. A 30 inch vacuum was created consequently backing up impinger water and wetting the filter. Testing resumed after replacing the filter.

APPENDIX F. LABORATORY REPORT

Particulate Results (Runs 1, 2, 3)

REPORT OF ANALYSIS
TRACE ELEMENTS
ppm - for solid samples
ug/ml - for liquid samples

Mark (x) for specific analysis
Mark (x) in block to left of Ident. No. when requesting all analysis on that line

Ident No.	Hg	Be	Cd	As	Mo	Ni	Sb	Cr	Zn	Cu	Pb	Se	B	F	Li	Ag	Sn	Fe	Sr	Na	K	Ca	Si	Mg	Ba					Particle Count

Analysis Method: 1-NAA, 2-SSMS, 3-OES, 4-AA, 5-ASV, 6-XRF, and 7-other

Comments:

Other Analysis - Use Table B to fill analysis requested above each column

Mark (x) for specific analysis requested

Ident No.	Mercury	Org. Mercury																												
5-73-002 501	X	2,539.4 mg																												
502	X	330.6 mg																												
503	X	117.7 mg																												
504		J	X	4.3 mg J																										
505	X	22.8 mg J																												
Analyst	J.T.X.	J.T.X.																												
Method	#5	#5																												

Comments: For [illegible]

SOURCE SAMPLE REQUEST & REPORT
(MUST BE FILLED OUT FOR EACH TEST RUN)

SAMPLING DATE 73 (YR) 2 (MO) 12 (DAY)

FIRST IDENT. NO. USED S-73-002-501

LAST IDENT. NO. USED S-73-002-505

TEST NO 73-ROC-1

RUN NO 1

RECD. / RCRD. 2-26-73

INDUSTRY Rock Drying + Grinding (USE TABLE A)

COMPANY IMC

ADDRESS Kingsford, Fla.

SAMPLING METHOD EPA 5

UNIT PROCESS OPERATION Fluid Bed Dryer

AIR POLLUTION CONTROL Spray Scrubber

FUEL USED No. 5 Fuel Oil

☒ INLET ☐ OUTLET

GAS VOLUME SAMPLED (METER VOL IN FT³) 42.592

COPIES TO

P. O.

LAB.

FILED

IDENT NO	DESCRIPTION OF SAMPLE OR SAMPLE FRACTION	SAMPLE WT (SOLID) MG	SAMPLE VOL (LIQUID) ML	ANALYSIS REQUESTED - GENERAL COMMENTS (APPROX CONCENTRATIONS - POSSIBLE INTERFERENCES ETC) (INDICATE SPECIFIC ANALYSIS ON BACKSIDE)
S-73-002-501	FRONT [illegible]	2,839.4	615	Part. Mass
502	FILTER # 73-025	330.6	—	" "
503	[illegible]	117.7	1,125	" "
504	[illegible]	4.3	180	" "
505	[illegible]	22.8	465	" "
H2O volumes				
Initial — 200				
Final — 400				
w/ work — 1075				

COMMENTS: Please subtract blanks! Please store samples

SAMPLING CONTRACTOR PEDCO (IF APPLICABLE)

PROJECT OFFICER Clyde E. Riley

REQUEST REVIEWED BY [signature] 2/23/73

DATE OF REQUEST 2-22-73

DATE ANALYSIS REQUESTED

DATE OF REQUEST (TO BE FILLED IN BY SSFAB)

EPA(DUR)245

REPORT OF ANALYSIS
TRACE ELEMENTS
ppm - for solid samples
ug/ml - for liquid samples

Mark (x) for specific analysis
Mark (x) in block to left of Ident. No. when requesting all analysis on that line

Ident No.	Hg	Be	Cd	As	V	Mn	Ni	Sb	Cr	Zn	Cu	Pb	Se	B	F	Li	Ag	Sn	Fe	Sr	Na	K	Ca	Si	Mg	Ba					Analysis Method

Analysis Method: 1-NAA, 2-SSMS, 3-OES, 4-AA, 5-ASV, 6-XRF, and 7-other

Comments:

Other Analysis - Use Table B to fill analysis requested (above each column)

Mark (x) for specific analysis requested

Ident No.		Mass		Org. Mass																											
S-73-002-506	X	288.5 mg.																													
507	X	149.0 mg.																													
508	X	78.8 mg.																													
509		0		X		9.7 mg.																									
510	X	~~11.1~~ mg.																													
Analyst		G.T.K.		G.T.K.																											
Method		#5		#5																											

Comments: #508 - no comments for #S-73-002-508

SOURCE SAMPLE REQUEST & REPORT
(MUST BE FILLED OUT FOR EACH TEST RUN)

SAMPLING DATE: 73 (YR) | 2 (MO) | 12 (DAY)

FIRST IDENT. NO. USED: S-73-002-506

LAST IDENT. NO. USED: S-73-002-510

TEST NO: 73-ROC-1

RUN NO: 1

INDUSTRY: Rock Drying & Grinding (USE TABLE A)

UNIT PROCESS OPERATION: Fluid Bed Dryer

COMPANY: IMC

AIR POLLUTION CONTROL: Spray Scrubber

ADDRESS: Kingsford, Fla.

FUEL USED: No. 5 Fuel Oil

SAMPLING METHOD: EPA 5

☐ INLET ☒ OUTLET

GAS VOLUME SAMPLED (METER VOL IN FT³): 114.926

RECD.

RCRD. 2-26-73

COPIES TO

P. O.

LAB.

FILED

IDENT NO	DESCRIPTION OF SAMPLE OR SAMPLE FRACTION	SAMPLE WT (SOLID) MG	SAMPLE VOL (LIQUID) ML	ANALYSIS REQUESTED - GENERAL COMMENTS (APPROX CONCENTRATIONS - POSSIBLE INTERFERENCES ETC) (INDICATE SPECIFIC ANALYSIS ON BACKSIDE)
S-73-002-506	PROBE WASH	288.5	545	Part. Mass
507	FILTER # 73-002	149.0	—	" "
508	IMP CONTENTS & WASH (2 containers)	78.2	1,640	" "
509	IMP CONTENTS & RINSE	9.7	420	" "
510	BACK HALF WASH	11.1	525	" "
H.C. blanks				
Initial — 200				
Final — 750				
w/wash — 1,580				

COMMENTS: 3 clean extract blanks
3 clean stat rangler

SAMPLING CONTRACTOR: PEDCO (IF APPLICABLE)

PROJECT OFFICER: Clyde E. Riley

REQUEST REVIEWED BY: JEM 2/23/73

DATE OF REQUEST: 2-22-73

DATE ANALYSIS REQUESTED:

DATE OF REQUEST (TO BE FILLED IN BY SSFAB)

EPA:DURHAM

REPORT OF ANALYSIS
TRACE ELEMENTS
ppm - for solid samples
ug/ml - for liquid samples

Mark (x) for specific analysis
Mark (x) in block to left of Ident. No. when requesting all analysis on that line

Ident No.	Hg	Be	Cd	As	V	Mn	Ni	Sb	Cr	Zn	Cu	Pb	Se	B	F	Li	Ag	Sn	Fe	Sr	Na	K	Ca	Si	Mg	Ba
X 513																										
X 514																										
X 515																										
X 516																										
X 517																										

Analysis Method: 1-NAA, 2-SSMS, 3-OES, 4-AA, 5-ASV, 6-XRF, and 7-other

Comments:

Other Analysis - Use Table B to fill analysis requested (above each column)

Mark (x) for specific analysis requested

Ident No.		Mercury		Org. Mercury
5-73-002-513	X	7,533.0 mg		
514	X	32.7 mg		
515	X	90.9 mg		
516	X	0	X	15.7 mg
517	X	25.5 mg		
Analyst		J.T.X.		J.T.X.
Method		#5		#5

Comments: #515. see comments for 5-73-002-503

SOURCE SAMPLE REQUEST & REPORT
(MUST BE FILLED OUT FOR EACH TEST RUN)

SAMPLING DATE 73 (YR) 2 (MO) 13 (DAY)

FIRST IDENT. NO. USED 5-73-002-513

LAST IDENT. NO. USED 5-73-002-517

TEST NO 73-RCC-1

RUN NO 2

INDUSTRY Rock Drying & Grinding (USE TABLE A)

UNIT PROCESS OPERATION Fluid Bed Dryer

AIR POLLUTION CONTROL Spray Scrubber

FUEL USED No. 5 Fuel Oil

☒ INLET ☐ OUTLET

GAS VOLUME SAMPLED (METER VOL IN FT³) 55.86

RECD. / RCRD. 2-26-73

COPIES TO

P. O.

LAB.

FILED

COMPANY IMC

ADDRESS Kingsford, Fla

SAMPLING METHOD EPA 5

IDENT NO	DESCRIPTION OF SAMPLE OR SAMPLE FRACTION	SAMPLE WT (SOLID) MG	SAMPLE VOL (LIQUID) ML	ANALYSIS REQUESTED - GENERAL COMMENTS (APPROX CONCENTRATIONS - POSSIBLE INTERFERENCES ETC) (INDICATE SPECIFIC ANALYSIS ON BACKSIDE)
5-73-002-513	FRONT ACETONE WASH	7,503.0	535	Part. Mass + Trace Metals
514	FILTER # 73-027	32.7	—	" " + Trace Metals
515	IMP CONTENTS & WASH (2 containers)	90.9	1385	" " + " "
516	IMP OF DAVIS EXTRACT	15.7	360	" " + " "
517	BACK ACETONE WASH	23.5	535	" " + " "
Hi moisture:				
Initial — 200				
Final — 545				
w/wash — 1,310				

COMMENTS: Clean without Blanks!

SAMPLING CONTRACTOR PEDCO (IF APPLICABLE)

PROJECT OFFICER Clyde E. Riley

REQUEST REVIEWED BY [signature] 2/23/73

DATE OF REQUEST 2-22-73

DATE ANALYSIS REQUESTED

DATE OF REQUEST (TO BE FILLED IN BY SSFAB)

EPA/DUP/245

REPORT OF ANALYSIS
TRACE ELEMENTS
ppm - for solid samples
ug/ml - for liquid samples

Mark (x) for specific analysis
Mark (x) in block to left of Ident. No. when requesting all analysis on that line

Ident No.	Hg	Be	Cd	As	V	Mn	Ni	Sb	Cr	Zn	Cu	Pb	Se	B	F	Li	Ag	Sn	Fe	Sr	Na	K	Ca	Si	Mg	Ba					
X 518																															
X 519																															
X 520																															
X 521																															
X 522																															

Analysis Method: 1-NAA, 2-SSMS, 3-OES, 4-AA, 5-ASV, 6-XRF, and 7-other

Comments:

Other Analysis - Use Table B to fill analysis requested (above each column)

Mark (x) for specific analysis requested

Ident No.		Mass	Org. Mass								
S-73-002-518	X	58.7 mg.									
519	X	170.5 mg.									
520	X	64.5 mg.									
521	X		X	20.1 mg.							
522	X	37.3 mg.									
Analyst		J.T.K.	J.T.K.								
Method		#5	#5								

Comments: #522 see comments for #S-73-002-503

SOURCE SAMPLE REQUEST & REPORT
(MUST BE FILLED OUT FOR EACH TEST RUN)

SAMPLING DATE 73 (YR) | 2 (MO) | 13 (DAY)

FIRST IDENT. NO. USED S-73-002-518

LAST IDENT. NO. USED S-73-002-523

TEST NO 73-ROC-1

RUN NO 2

INDUSTRY Rock Drying & Grinding (USE TABLE A)

COMPANY IMC

ADDRESS Kingsford, Fla.

SAMPLING METHOD EPA 5

UNIT PROCESS OPERATION Fluid Bed Dryer

AIR POLLUTION CONTROL Spray Scrubber

FUEL USED No. 5 Fuel Oil

☐ INLET ☒ OUTLET

GAS VOLUME SAMPLED (METER VOL IN FT³) 107,502

RECD.

RCRD 2-26-73

COPIES TO

P. O.

LAB.

FILED

IDENT NO	DESCRIPTION OF SAMPLE OR SAMPLE FRACTION	SAMPLE WT (SOLID) MG	SAMPLE VOL (LIQUID) ML	ANALYSIS REQUESTED - GENERAL COMMENTS (APPROX CONCENTRATIONS - POSSIBLE INTERFERENCES ETC) (INDICATE SPECIFIC ANALYSIS ON BACKSIDE)
S-73-002-518	FRONT ACETONE WASH	~~58.7~~	510	Part. Mass + Trace Metals
519	FILTER # 73-004	170.5	—	" " " + " "
520	IMP CONTENTS & H2O (2 containers)	~~69.5~~	1,445	" " " + " "
521	IMP ORGANIC EXTRACT	20.1	360	" " " + " "
522	BACK ACETONE WASH	~~57.3~~	420	" " " + " "
Hexane rinse				
Initial = 200				
Final = 737				
w/work = 1,385				

COMMENTS: Please subtract blanks!

SAMPLING CONTRACTOR PEDCO (IF APPLICABLE)

PROJECT OFFICER Clyde E. Riley

REQUEST REVIEWED BY [signature] 2/23/73

DATE OF REQUEST 2-22-73

DATE ANALYSIS REQUESTED

DATE OF REQUEST (TO BE FILLED IN BY SSFAB)

EPA(DUR)245

REPORT OF ANALYSIS
TRACE ELEMENTS
ppm - for solid samples
ug/ml - for liquid samples

Mark (x) for specific analysis
Mark (x) in block to left of Ident. No. when requesting all analysis on that line

Ident No.	Hg	Be	Cd	As	V	Mn	Ni	Sb	Cr	Zn	Cu	Pb	Se	B	F	Li	Ag	Sn	Fe	Sr	Mo	K	Co	Cl	Mg	Pa					

Analysis Method: 1-NAA, 2-SSMS, 3-OES, 4-AA, 5-ASV, 6-XRF, and 7-other

Comments:

Other Analysis - Use Table B to fill analysis requested (above each column)

Mark (x) for specific analysis requested

Ident No.		Mercury		Org. Mercury											
S-73-002-525	X	5.5 ~~3.8~~ mg													
526	X	58.9 mg													
527	X	64.4 mg													
528	X	1	X	10.6 mg											
529	X	~~26.8~~ mg													
Analyst		J.T.K.		J.T.K.											
Method		#5		#5											

Comments: #527 - see comments for S-73-002-503

SOURCE SAMPLE REQUEST & REPORT
(MUST BE FILLED OUT FOR EACH TEST RUN)

SAMPLING DATE 73 (YR) 2 (MO) 13 (DAY)

FIRST IDENT. NO. USED S-73-002-525

LAST IDENT. NO. USED S-73-002-529

TEST NO 73-RCC-1

RUN NO 3

RECD. / RCRD. 2-26-73

INDUSTRY Rock Drying + Grinding (USE TABLE A)

COMPANY IMC

ADDRESS Kingsford, Fla.

SAMPLING METHOD EPA 5

UNIT PROCESS OPERATION Fluid Bed Dryer

AIR POLLUTION CONTROL Spray Scrubber

FUEL USED No. 5 Fuel Oil

☒ INLET ☐ OUTLET

GAS VOLUME SAMPLED (METER VOL IN FT³) 55.676

COPIES TO

P. O.

LAB.

FILED

IDENT NO	DESCRIPTION OF SAMPLE OR SAMPLE FRACTION	SAMPLE WT (SOLID) MG	SAMPLE VOL (LIQUID) ML	ANALYSIS REQUESTED - GENERAL COMMENTS (APPROX CONCENTRATIONS - POSSIBLE INTERFERENCES ETC) (INDICATE SPECIFIC ANALYSIS ON BACKSIDE)
S-73-002-525	FRONT ACETONE WASH	5,5 ~~[illegible]~~ 39.5	930	~~M~~ Part. Mass
~~S-T~~ -526	FILTER # 73-005	587.9	—	" "
527	IMP CONTENTS & WASH	60.4	1,195	" "
528	IMP ORGANIC EXTRACT	10.6	360	" "
529	BACK ACETONE WASH	26.8 ~~[illegible]~~	390	" "
H_2O volumes				
Initial — 200				
Final — ~~[illegible]~~ 515				
w/wash — 1,145				

COMMENTS: Please subtract blanks! Please store samples

SAMPLING CONTRACTOR PEDCO (IF APPLICABLE)

PROJECT OFFICER Clyde E Riley

REQUEST REVIEWED BY [signature] 2/23/73

DATE OF REQUEST 2-22-73

DATE ANALYSIS REQUESTED

DATE OF REQUEST (TO BE FILLED IN BY SSFAB)

EPA(DUR)245

REPORT OF ANALYSIS
TRACE ELEMENTS
ppm - for solid samples
ug/ml - for liquic samples

Mark (x) for specific analysis
Mark (x) in block to left of Ident. No. when requesting all analysis on that line

Ident No.	Hg	Be	Cd	As	V	Mn	Ni	Sb	Cr	Zn	Cu	Pb	Se	B	F	Li	Ag	Sn	Fe	Sr	Na	K	Co	Si	Mg	Ba

Analysis Method: 1-NAA, 2-SSMS, 3-OES, 4-AA, 5-ASV, 6-XRF, and 7-other

Comments:

Other Analysis - Use Table B to fill analysis requested above each column

Mark (x) for specific analysis requested

Ident No.		Mass		Org Mass										
373-003-530	X	73.9 mg.												
531	X	165.2 mg.												
532	X	39.3 mg.												
533			X	15.2 mg.										
534	X	22.5 mg.												
Analyst		J.T.X.		J.T.X.										
Method		#5		#5										

Comments: #532 - see comments for #373-003-503

SOURCE SAMPLE REQUEST & REPORT
(MUST BE FILLED OUT FOR EACH TEST RUN)

SAMPLING DATE 73 (YR) 2 (MO) 13 (DAY)

FIRST IDENT. NO. USED S-73-002-530

LAST IDENT. NO. USED S-73-002-534

TEST NO 73-ROC-1

RUN NO 3

RECD. / RCRD. 2-26-73

INDUSTRY Rock Drying + Grinding (USE TABLE A)

COMPANY IMC

ADDRESS Kingsford, Fla.

SAMPLING METHOD EPA 5

UNIT PROCESS OPERATION Fluid Bed Dryer

AIR POLLUTION CONTROL Spray Scrubber

FUEL USED No. 5 Fuel Oil

☐ INLET ☒ OUTLET

GAS VOLUME SAMPLED (METER VOL IN FT³) 108.916

COPIES TO

P. O.

LAB.

FILED

IDENT NO	DESCRIPTION OF SAMPLE OR SAMPLE FRACTION	SAMPLE WT (SOLID) MG	SAMPLE VOL (LIQUID) ML	ANALYSIS REQUESTED - GENERAL COMMENTS (APPROX CONCENTRATIONS - POSSIBLE INTERFERENCES ETC) (INDICATE SPECIFIC ANALYSIS ON BACKSIDE)
S-73-002-530	FRONT ACETONE WASH	73.4	740	Part. Mass
531	FILTER # 73-028	165.2	—	" "
532	IMP CONTENTS & WASH (2 containers)	39.3	1,470	" "
533	IMP ORGANIC EXTRACT	18.7	420	" "
534	BACK ACETONE WASH	22.5	515	" "
H_2O volumes				
Initial - 220				
Final - 996				
w/wash - 1,410				

COMMENTS: Please subtract blanks! Please store samples

SAMPLING CONTRACTOR PEDCO (IF APPLICABLE)

PROJECT OFFICER Clyde E. Riley

REQUEST REVIEWED BY [signature] 2/23/73

DATE OF REQUEST 2-22-73

DATE ANALYSIS REQUESTED

DATE OF REQUEST (TO BE FILLED IN BY SSFAB)

EPA(DUR)245

REPORT OF ANALYSIS
TRACE ELEMENTS
ppm - for solid samples
ug/ml - for liquid samples

Mark (x) for specific analysis
Mark (x) in block to left of Ident. No. when requesting all analysis on that line

Ident No.	Hg	Be	Cd	As	V	Mn	Ni	Sb	Cr	Zn	Cu	Pb	Se	B	F	Li	Ag	Sn	Fe	Sr	Na	K	Ca	Si	Mg	Ba					Analyst Initials
537																															
538																															
539																															
540																															

Analysis Method: 1-NAA, 2-SSMS, 3-OES, 4-AA, 5-ASV, 6 XRF, and 7-other

Comments:

Other Analysis - Use Table B to fill analysis requested (above each column)

Mark (x) for specific analysis requested

Ident No.		Mass		Eng. Mass								
573-002-537	X	0.8mg										
538	X	13.2mg										
539	X		X	0.0mg.								
Analyst		J.T.K.		J.T.K.								
Method		#5		#5								

Comments: 537 - was extracted in the usual manner, then evaporated at 70°C to be consistent with the samples. DT

538 - [illegible] which would not dry in the hood or [illegible]. [illegible] this [illegible] contamination [illegible] provided was the result of using acetone from a plastic jug - this high blank value was subtracted from all [illegible]

SOURCE SAMPLE REQUEST & REPORT
(MUST BE FILLED OUT FOR EACH TEST RUN)

SAMPLING DATE 73 | 2 | 13 (YR | MO | DAY)

FIRST IDENT. NO. USED S-73-002-537

LAST IDENT. NO. USED S-73-002-540

TEST NO 73-ROC-1

RUN NO Blanks

RECD. / RCRD. 2-26-73

INDUSTRY Rock Drying & Grinding (USE TABLE A)

UNIT PROCESS OPERATION Fluid Bed Dryer

COMPANY IMC

AIR POLLUTION CONTROL Spray Scrubber

ADDRESS Kingsford Fla.

FUEL USED No 5 Fuel Oil

COPIES TO

O.

LAB.

FILED

SAMPLING METHOD EPA 5

~~INLET~~ ~~OUTLET~~

GAS VOLUME SAMPLED (METER VOL IN FT^3) N/A

IDENT NO	DESCRIPTION OF SAMPLE OR SAMPLE FRACTION	SAMPLE WT (SOLID) MG	SAMPLE VOL (LIQUID) ML	ANALYSIS REQUESTED - GENERAL COMMENTS (APPROX CONCENTRATIONS - POSSIBLE INTERFERENCES ETC) (INDICATE SPECIFIC ANALYSIS ON BACKSIDE)
S-73-002-537	Water blank for part. sampling	0.8	575	Part. Mass & Trace Metals
538	Acetone blank for part sampling	13.2*	550	" " & " "
539	Ether - Chloroform blank	0.0	180	" " & " "
540	Trace metal blank filters (3)	—	—	— — " " "
	* See reverse side of this sheet.			

COMMENTS: ~~[illegible] for Tracy only! Trace metal analysis not needed at this time.~~

SAMPLING CONTRACTOR PEDCO (IF APPLICABLE)

PROJECT OFFICER Clyde E. Riley

REQUEST REVIEWED BY [signature] 2/23/73

DATE OF REQUEST 2-22-73

DATE ANALYSIS REQUESTED

DATE OF REQUEST (TO BE FILLED IN BY SSFAB)

EPA/DUR/245

Fluoride Results (Runs 4, 5, 6)

REPORT OF ANALYSIS
TRACE ELEMENTS
ppm - for solid samples
ug/ml - for liquid samples

Mark (x) for specific analysis
Mark (x) in block to left of Ident. No. when requesting all analysis on that line

Ident No.	Hg	Be	Cd	As	V	Mn	Ni	Sb	Cr	Zn	Cu	Pb	Se	B	F	Li	Ag	Sn	Fe	Sr	Mo	K	Co	Si	Mg	Ba					Analyst's Initial

Analysis Method: 1-NAA, 2-SSMS, 3-OES, 4-AA, 5-ASV, 6-XRF, and 7-other

Comments:

Other Analysis - Use Table B to fill analysis requested (above each column)

Mark (x) for specific analysis requested

Ident No.	SOLUBLE FLUORIDE	INSOLUBLE FLUORIDE	TOTAL FLUORIDE									
73-002-541	☒ 3.1 mg 0	☒ 134.1 mg 0	☒ 137.2 mg 0									
Analyst	DMC + JDM	DMC + JDM	DMC + JDM									
Method	SPOONS	SPOONS	SPOONS									

Comments: * SAMPLE WAS FILTERED TO 1200ML FROM 1620 ML, RESULTS CORRECTED TO 1720 ML.
▲ VOLUME LOSS UNACCOUNTED FOR

SOURCE SAMPLE REQUEST & REPORT
(MUST BE FILLED OUT FOR EACH TEST RUN)

SAMPLING DATE 73 (YR) 2 (MO) 14 (DAY)

FIRST IDENT. NO. USED S-73-002-541

LAST IDENT. NO. USED S-73-002-541

TEST NO 73-ROC-1

RUN NO 4

RECD. / RCRD. 2-26-73

INDUSTRY Rock Drying & Grinding (USE TABLE A)

UNIT PROCESS OPERATION Fluid Bed Dryer

COMPANY IMC

AIR POLLUTION CONTROL Spray Scrubber

COPIES TO

ADDRESS Kingsford, Fla.

FUEL USED No. 5 Fuel Oil

P. O.

SAMPLING METHOD Fluorides at Phosphate Fertilizer Plants

☒ INLET ☐ OUTLET

GAS VOLUME SAMPLED (METER VOL IN FT³) 66,501

LAB.

FILED

IDENT NO	DESCRIPTION OF SAMPLE OR SAMPLE FRACTION	SAMPLE WT (SOLID) MG	SAMPLE VOL (LIQUID) ML	ANALYSIS REQUESTED - GENERAL COMMENTS (APPROX CONCENTRATIONS - POSSIBLE INTERFERENCES ETC) (INDICATE SPECIFIC ANALYSIS ON BACKSIDE)
S-73-002-541	FRONT WATER WASH, IMP CONTENTS & WASH, + FILTER # (2 containers) 273003	N/A	1200*	Total Fluorides - 1. Soluble 2. Insoluble (Please ~~separate~~ analyze separately)
				S IS I
				3.1 134.1 137.2
Hex volumes				
Initial - 300 ← note				
Final - 976				
Wash - 1720				

COMMENTS: IMC removed 100 mls of sample, making total wash volume 1620! Please correct results to total volume (1720).

SAMPLING CONTRACTOR PEDCO (IF APPLICABLE)

PROJECT OFFICER Clyde E Riley

REQUEST REVIEWED BY [signature] 2/22/73

DATE OF REQUEST 2-22-73

DATE ANALYSIS REQUESTED

DATE OF REQUEST (TO BE FILLED IN BY SSFAB)

EPA(DUR)245

REPORT OF ANALYSIS
TRACE ELEMENTS
ppm - for solid samples
ug/ml - for liquid samples

Mark (x) for specific analysis
Mark (x) in block to left of Ident. No. when requesting all analysis on that line

Ident No.	Hg	Be	Cd	As	V	Mn	Ni	Sb	Cr	Zn	Cu	Pb	Se	B	F	Li	Ag	Sn	Fe	Sr	Na	K	Ca	Si	Mg	Ba					Analyst's Initial

Analysis Method: 1-NAA, 2-SSMS, 3-OES, 4-AA, 5-ASV, 6-XRF, and 7-other

Comments:

Other Analysis - Use Table B to list analysis requested (above each column)

Mark (x) for specific analysis requested

Ident No.	SOLUBLE FLUORIDE	INSOLUBLE FLUORIDE	TOTAL FLUORIDE									
78-002-542	X 5.6mg	X 2.3mg	X 7.9mg									
Analyst	[illegible]	[illegible]	[illegible]									
Method	SPADNS	SPADNS	SPADNS									

Comments: *SAMPLE WAS FILTERED TO 1635mL FROM 1560, RESULTS CORRECTED TO 1660mL.

SOURCE SAMPLE REQUEST & REPORT
(MUST BE FILLED OUT FOR EACH TEST RUN)

SAMPLING DATE 73 (YR) 2 (MO) 14 (DAY)

FIRST IDENT. NO. USED S-73-002-542

LAST IDENT. NO. USED S-73-002-542

TEST NO 73-ROC-1

RUN NO 4

RECD. / RCRD. 2-26-73

INDUSTRY Rock Drying & Grinding (USE TABLE A)

COMPANY IMC

ADDRESS Kingsford, Fla.

SAMPLING METHOD Fluorides

UNIT PROCESS OPERATION Fluid Bed Dryer

AIR POLLUTION CONTROL Spray Scrubber

FUEL USED No 5 Fuel Oil

☐ INLET ☒ OUTLET

GAS VOLUME SAMPLED (METER VOL IN FT³) 106,735

COPIES TO

P. O.

LAB.

FILED

IDENT NO	DESCRIPTION OF SAMPLE OR SAMPLE FRACTION	SAMPLE WT (SOLID) MG	SAMPLE VOL (LIQUID) ML	ANALYSIS REQUESTED - GENERAL COMMENTS (APPROX CONCENTRATIONS - POSSIBLE INTERFERENCES ETC) (INDICATE SPECIFIC ANALYSIS ON BACKSIDE)
S-73-002-542	FRONT WATER WASH, IMP CONTENTS & WASH, & FILTER # 273002 (2 containers)	N/A	1635*	Total Fluorides - 1. Soluble 2. Insoluble (Please analyze separately)
				S IS T
				5.6 2.3 7.9
H_2O volumes				
Initial - ~~3~~ 200 ~~[illegible]~~ <200				
Final - 925				
w/wash - 1660				

COMMENTS: IMC removed 100 mls of sample, making total wash volume 1560! Please correct results to total volume (1660).

SAMPLING CONTRACTOR PEDCO (IF APPLICABLE)

PROJECT OFFICER Clyde E. Riley

REQUEST REVIEWED BY [illegible] 2/26/73

DATE OF REQUEST 2-22-73

DATE ANALYSIS REQUESTED

DATE OF REQUEST (TO BE FILLED IN BY SSFAB)

EPA(DUR)245

REPORT OF ANALYSIS
TRACE ELEMENTS
ppm - for solid samples
ug/ml - for liquid samples

Mark (x) for specific analysis
Mark (x) in block to left of Ident. No. when requesting all analysis on that line

Ident No.	Hg	Be	Cd	As	V	Mn	Ni	Sb	Cr	Zn	Cu	Pb	Se	B	F	Li	Ag	Sn	Fe	Sr	Na	K	Ca	Si	Mg	Be					Analyst's Initial

Analysis Method: 1-NAA, 2-SSMS, 3-OES, 4-AA, 5-ASV, 6-XRF, and 7-other

Comments:

Other Analysis - Use Table B to fill analysis requested (above each column)

Mark (x) for specific analysis requested

Ident No.	[illegible]	[illegible]	Total							
73-002-550	X 5.7mg	X 183.9mg	189.4							
Analyst	[illegible]	[illegible]								
Method	SPADNS	SPADNS								

Comments: * SAMPLE WAS FILTERED TO 1620 mL FROM 1600 mL, RESULTS CORRECTED TO 1700 mL

SOURCE SAMPLE REQUEST & REPORT
(MUST BE FILLED OUT FOR EACH TEST RUN)

SAMPLING DATE: 73 (YR) 2 (MO) 14 (DAY)

FIRST IDENT. NO. USED: 5-73-002-550

LAST IDENT. NO. USED: 5-73-002-550

TEST NO: 73-ROC-1

RUN NO: #5

RECD. / RCRD.: 2-26-73

INDUSTRY: Rock Drying + Grinding (USE TABLE A)

COMPANY: IMC

ADDRESS: Kingsford, Fla.

SAMPLING METHOD: Fluorides

UNIT PROCESS OPERATION: Fluid Bed Dryer

AIR POLLUTION CONTROL: Spray Scrubber

FUEL USED: No. 5 Fuel Oil

☒ INLET ☐ OUTLET

GAS VOLUME SAMPLED (METER VOL IN FT³): 65.997

COPIES TO

P. O.

LAB.

FILED

IDENT NO	DESCRIPTION OF SAMPLE OR SAMPLE FRACTION	SAMPLE WT (SOLID) MG	SAMPLE VOL (LIQUID) ML	ANALYSIS REQUESTED - GENERAL COMMENTS (APPROX CONCENTRATIONS - POSSIBLE INTERFERENCES ETC) (INDICATE SPECIFIC ANALYSIS ON BACKSIDE)
5-73-002-550	FRONT WATER WASH, IMP CONTENTS & WASH, & FILTER #: 273004 (2 containers)	N/A	1620*	Total Fluorides - 1, Soluble 2, Insoluble (Please analyze separately)
				5 IS I
				5.7 133.9 189.6

Hall volumes
Initial - 300 ← not
Final - 933
my wash - 1700

COMMENTS: IMC removed 100 ml's of sample, making total wash volume 1600. Please correct results to total volume (1700).

SAMPLING CONTRACTOR: PEDCO (IF APPLICABLE)

PROJECT OFFICER: Clyde E. Riley

REQUEST REVIEWED BY: [signature] 2/27/73

DATE OF REQUEST: 2-21-73

DATE ANALYSIS REQUESTED:

DATE OF REQUEST (TO BE FILLED IN BY SSFAB):

EPA(OUR)245

REPORT OF ANALYSIS
TRACE ELEMENTS
ppm - for solid samples
ug/ml - for liquid samples

Mark (x) for specific analysis
Mark (x) in block to left of Ident. No. when requesting all analysis on that line

Ident No.	Hg	Be	Cd	As	V	Mn	Ni	Sb	Cr	Zn	Cu	Pb	Se	B	F	Li	Ag	Sn	Fe	Sr	Na	K	Ca	Si	Mg	Ba					Analyst's Initial

Analysis Method: 1-NAA, 2-SSMS, 3-OES, 4-AA, 5-ASV, 6-XRF, and 7-other

Comments:

Other Analysis - Use Table B to list analysis requested (above each column)

Mark (x) for specific analysis requested

	Ident No.	SOLUBLE FLUORIDE	INSOLUBLE FLUORIDE	TOTAL FLUORIDE								
23	002-551	X 6.3 mg	X 61.1 mg	X 67.4 mg								
Analyst		[illegible]	[illegible]	DMG 7/11								
Method		SPADNS	SPADNS	SPADNS								

Comments: * SAMPLE WAS FILTERED TO 1955 mL FROM 1460 mL, RESULTS CORRECTED TO 1500 mL

SOURCE SAMPLE REQUEST & REPORT
(MUST BE FILLED OUT FOR EACH TEST RUN)

SAMPLING DATE: 73 (YR) 2 (MO) 14 (DAY)

FIRST IDENT. NO. USED: S-73-002-551

LAST IDENT. NO. USED: S-73-002-551

TEST NO: 73-ROC-1

RUN NO: 5

RECD. / RCRD.: 2-26-73

INDUSTRY: Rock Drying & Grinding (USE TABLE A)

COMPANY: IMC

ADDRESS: Kingsford, Fla.

SAMPLING METHOD: Fluorides

UNIT PROCESS OPERATION: Fluid Bed Dryer

AIR POLLUTION CONTROL: Spray Scrubber

FUEL USED: No. 5 Fuel Oil

☐ INLET ☒ OUTLET

GAS VOLUME SAMPLED (METER VOL IN FT³): 108.410

COPIES TO: P. O. / LAB. / FILED

IDENT NO	DESCRIPTION OF SAMPLE OR SAMPLE FRACTION	SAMPLE WT (SOLID) MG	SAMPLE VOL (LIQUID) ML	ANALYSIS REQUESTED - GENERAL COMMENTS (APPROX CONCENTRATIONS - POSSIBLE INTERFERENCES ETC) (INDICATE SPECIFIC ANALYSIS ON BACKSIDE)
S-73-002-551	FRONT WATER WASH, IMP CONTENTS & WASH, & FILTER # (2 containers) 273005 273006	N/A	1955*	Total Fluorides 1. Soluble 2. Insoluble (Please analyze separately)
				S IS I
				6.3 61.1 67.4

H2O volumes
Initial - 200
Final - 202
w/wash - 1500

COMMENTS: IMC removed 100 ml of sample, making total wash volume 1400! Please correct results to total volume (1500).

SAMPLING CONTRACTOR: PEDCO (IF APPLICABLE)

PROJECT OFFICER: Clyde E. Riley

REQUEST REVIEWED BY: [illegible] 4/4/73

DATE OF REQUEST: 2-22-73

DATE ANALYSIS REQUESTED:

DATE OF REQUEST (TO BE FILLED IN BY SSFAB)

EPA(DUR)245

REPORT OF ANALYSIS
TRACE ELEMENTS
ppm - for solid samples
ug/ml - for liquid samples

Mark (x) for specific analysis
Mark (x) in block to left of Ident. No. when requesting all analysis on that line

Ident No.	Hg	Be	Cd	As	V	Mn	Ni	Sb	Cr	Zn	Cu	Pb	Se	B	F	Li	Ag	Sn	Fe	Sr	Na	K	Ca	Si	Mg	Ba					Analyst's Initial

Analysis Method: 1-NAA, 2-SSMS, 3-OES, 4-AA, 5-ASV, 6-XRF, and 7-other

Comments:

Other Analysis - Use Table B to fill analysis requested (above each column)

Mark (x) for specific analysis requested

Ident No.	SOLUBLE FLUORIDE	INSOLUBLE FLUORIDE	TOTAL FLUORIDE							
73-002-559	X 2.6mg	X 169.3mg	X 171.9mg							
Analyst	[illegible] + jm	[illegible] + jm	DNG + jm							
Method	SPADNS	SPADNS	SPADNS							

Comments: * SAMPLE FILTERED TO 1920 ML FROM 1640 ML, RESULTS CORRECTED TO 1740 ML.

SOURCE SAMPLE REQUEST & REPORT
(MUST BE FILLED OUT FOR EACH TEST RUN)

SAMPLING DATE 73 (YR) 2 (MO) 15 (DAY)

FIRST IDENT. NO. USED S-73-002-559

LAST IDENT. NO. USED S-73-002-559

TEST NO 73-ROC-1

RUN NO 6

RECD. / RCRD. 2-26-73

INDUSTRY Rock Drying & Grinding (USE TABLE A)

COMPANY IMC

ADDRESS Kingsford, Fla.

SAMPLING METHOD Fluoride

UNIT PROCESS OPERATION Fluid Bed Dryer

AIR POLLUTION CONTROL Spray Scrubber

FUEL USED No. 5 Fuel Oil

☒ INLET ☐ OUTLET

GAS VOLUME SAMPLED (METER VOL IN FT³) 65.937

COPIES TO

P. O.

LAB.

FILED

IDENT NO	DESCRIPTION OF SAMPLE OR SAMPLE FRACTION	SAMPLE WT (SOLID) MG	SAMPLE VOL (LIQUID) ML	ANALYSIS REQUESTED - GENERAL COMMENTS (APPROX CONCENTRATIONS - POSSIBLE INTERFERENCES ETC) (INDICATE SPECIFIC ANALYSIS ON BACKSIDE)
S 73-002-559	FRONT WATER WASH, IMP CONTENTS & WASH, & FILTER	N/A		Total Fluorides - 1. Soluble 2. Insoluble
	(2 containers) 273009			(Please analyze separately)
	273040			
				S IS T
				2.6 169.3 171.9
H_2O volumes				
Initial - 300 ← note				
Final - 377				
w/ work - 1740				

COMMENTS: IMC removed 100 mls of sample, making total work volume 1640! Please correct results to total volume (1740).

SAMPLING CONTRACTOR PEDCO (IF APPLICABLE)

PROJECT OFFICER Clyde E. Riley

REQUEST REVIEWED BY [signature] 2/22/73

DATE OF REQUEST 2-22-73

DATE ANALYSIS REQUESTED

DATE OF REQUEST (TO BE FILLED IN BY SSFAB)

EPA(DUR)245

REPORT OF ANALYSIS
TRACE ELEMENTS
ppm - for solid samples
ug/ml - for liquid samples

Mark (x) for specific analysis
Mark (x) in block to left of Ident. No. when requesting all analysis on that line

Ident No.	Hg	Be	Cd	As	V	Mn	Ni	Sb	Cr	Zn	Cu	Pb	Se	B	F	Li	Ag	Sn	Fe	Sr	Na	K	Ca	Si	Mg	Ba					Analyst's Initial

Analysis Method: 1-NAA, 2-SSMS, 3-OES, 4-AA, 5-ASV, 6-XRF, and 7-other

Comments:

Other Analysis - Use Table B to fill analysis requested (above each column)

Mark (x) for specific analysis requested

Ident No.	[illegible] FLUORIDE	[illegible] FLUORIDE	[illegible] FLUORIDE							
73-002-560	X 2.2mg	X 4.7mg	X 6.9mg							
Analyst	[illegible] +jm	[illegible] +jm	OMG +jm							
Method	SPADNS	SPADNS	SPADNS							

Comments: * SAMPLE FILTERED TO 1620mL FROM 1540 mL, RESULTS CORRECTED TO 1640 mL

SOURCE SAMPLE REQUEST & REPORT
(MUST BE FILLED OUT FOR EACH TEST RUN)

TEST NO 73-ROC-1

RUN NO 6

RECD. / RCRD. 2-26-73

ATE 73 (YR) 2 (MO) 15 (DAY)

FIRST IDENT. NO. USED S-73-002-560

LAST IDENT. NO. USED S-73-002-560

UNIT PROCESS OPERATION Fluid Bed Dryer

IDUSTRY Rock Drying & Grinding (USE TABLE A)

AIR POLLUTION CONTROL Spray Scrubber

OMPANY IMC

FUEL USED No. 5 Fuel Oil

ADDRESS Kingsford, Fla.

☐ INLET ☒ OUTLET

GAS VOLUME SAMPLED (METER VOL IN FT³) 109.121

SAMPLING METHOD Fluoride

COPIES TO

P. O.

LAB.

FILED

NO	DESCRIPTION OF SAMPLE OR SAMPLE FRACTION	SAMPLE WT (SOLID) MG	SAMPLE VOL (LIQUID) ML	ANALYSIS REQUESTED - GENERAL COMMENTS (APPROX CONCENTRATIONS - POSSIBLE INTERFERENCES ETC) (INDICATE SPECIFIC ANALYSIS ON BACKSIDE)
-560	FRONT WATER WASH, IMP CONTENTS & WASH, & FILTER # (2 containers) 273007 273008	N/A		Total Fluoride - 1. soluble 2. Insoluble (Please analyze separately)
				S IS T
				2.2 4.7 6.9
volume				
al - 200				
l - 1025				
ash - 1640				

ENTS: IMC removed 100 mls of sample, making total wash volume 1540! Please correct results to total volume (1640).

REQUEST REVIEWED BY [signature] 2/22/73

MPLING NTRACTOR PEDCO (IF APPLICABLE)

PROJECT OFFICER Clyde E. Riley

DATE OF REQUEST (TO BE FILLED IN BY SSFAB)

OF REQUEST 2-22-73

DATE ANALYSIS REQUESTED

UR)245

SOURCE SAMPLE REQUEST & REPORT

(MUST BE FILLED OUT FOR EACH TEST RUN)

SAMPLING DATE: 73 (YR) | 2 (MO) | 12 (DAY)

FIRST IDENT. NO. USED: S-73-002-512

LAST IDENT. NO. USED: S-73-002-512

TEST NO 73-ROC-1

RUN NO 1

RECD.

RCRD 2-26-73

INDUSTRY Rock Drying & Grinding (USE TABLE A)

UNIT PROCESS OPERATION Fluid Bed Dryer

COMPANY IMC

AIR POLLUTION CONTROL Scrubber

COPIES TO

ADDRESS Kingsford, Fla.

FUEL USED No. 5 Fuel Oil

P. O.

SAMPLING METHOD N/A grab

☐ INLET ☒ OUTLET

LAB.

GAS VOLUME SAMPLED (METER VOL IN FT^3) N/A

FILED

IDENT NO	DESCRIPTION OF SAMPLE OR SAMPLE FRACTION	SAMPLE WT (SOLID) MG	SAMPLE VOL (LIQUID) ML	ANALYSIS REQUESTED - GENERAL COMMENTS (APPROX CONCENTRATIONS - POSSIBLE INTERFERENCES ETC) (INDICATE SPECIFIC ANALYSIS ON BACKSIDE)
S-73-002-512	Rock product out of dryer	N/A	N/A	Total Fluorids, P_2O_5 36.2 31.8

COMMENTS:

SAMPLING CONTRACTOR PEDCo (IF APPLICABLE)

PROJECT OFFICER Clyde E. Riley

REQUEST REVIEWED BY [signature] 7-2-73

DATE OF REQUEST 2-22-73

DATE ANALYSIS REQUESTED

DATE OF REQUEST (TO BE FILLED IN BY SSFAB)

EPA(DUR)245

REPORT OF ANALYSIS
TRACE ELEMENTS
ppm - for solid samples
ug/ml - for liquid samples

Mark (x) for specific analysis
Mark (x) in block to left of ident. No. when requesting all analysis on that line

Ident No.	Hg	Be	Cd	As	V	Mn	Ni	Sb	Cr	Zn	Cu	Pb	Se	B	F	Li	Ag	Sn	Fe	Sr	Mo	K	Co	Si	Mg	Ba					Analyst's Initial

Analysis Method: 1-NAA, 2-SSMS, 3-OES, 4-AA, 5-ASV, 6-XRF, and 7-other

Comments:

Other Analysis - Use Table B to fill analysis requested (above each column)

Mark (x) for specific analysis requested

Ident No.	FLUORIDE	TOTAL P_2O_5											
[illegible]-523	X 379 mg/L	X 30.5%											
Analyst	[illegible] FC	AR											
Method	SPADNS	AMMONIUM MOLYBDATE											

Comments:

SOURCE SAMPLE REQUEST & REPORT

(MUST BE FILLED OUT FOR EACH TEST RUN)

SAMPLING DATE: 73 (YR) | 2 (MO) | 13 (DAY)

FIRST IDENT. NO. USED: S-73-002-523

LAST IDENT. NO. USED: S-73-002-523

TEST NO: 2.3-ROC-1

RUN NO: 2

RECD. / RCRD.: 2-26-73

INDUSTRY: Rock Drying & Grinding (USE TABLE A)

UNIT PROCESS OPERATION: Fluid Bed Dryer

COMPANY: IMC

AIR POLLUTION CONTROL: Scrubber

COPIES TO

ADDRESS: Kingsford, Fla.

FUEL USED: No. 5 Fuel Oil

P. O.

SAMPLING METHOD: N/A (grab)

☒ INLET ☐ OUTLET

GAS VOLUME SAMPLED (METER VOL IN FT^3): N/A

LAB.

FILED

IDENT NO	DESCRIPTION OF SAMPLE OR SAMPLE FRACTION	SAMPLE WT (SOLID) MG	SAMPLE VOL (LIQUID) ML	ANALYSIS REQUESTED - GENERAL COMMENTS (APPROX CONCENTRATIONS - POSSIBLE INTERFERENCES ETC) (INDICATE SPECIFIC ANALYSIS ON BACKSIDE)
S-73-002-523	Raw fed into dryer	N/A	N/A	Total Fluoride, P_2O_5 37.8, 30.5%

COMMENTS:

SAMPLING CONTRACTOR: PEDCo (IF APPLICABLE)

PROJECT OFFICER: Clyde E. Riley

REQUEST REVIEWED BY: [signature] 2/26/73

DATE OF REQUEST: 2-22-73

DATE ANALYSIS REQUESTED:

DATE OF REQUEST (TO BE FILLED IN BY SSFAB)

EPA(DUR)245

REPORT OF ANALYSIS
TRACE ELEMENTS
ppm - for solid samples
ug/ml - for liquid samples

Mark (x) for specific analysis
Mark (x) in block to left of Ident. No. when requesting all analysis on that line

Ident No.	Hg	Be	Cd	As	V	Mn	Ni	Sb	Cr	Zn	Cu	Pb	Se	B	F	Li	Ag	Sn	Fe	Sr	Na	K	Ca	Si	Mg	Ba					Analyst's Initial

Analysis Method: 1-NAA, 2-SSMS, 3-OES, 4-AA, 5-ASV, 6-XRF, and 7-other

Comments:

Other Analysis - Use Table B to fill analysis requested (above each column)

Mark (x) for specific analysis requested

Ident No.	[illegible]	TOTAL P_2O_5									
[illegible]	[illegible]	X 32.4 %									
Analyst	[illegible]	AR									
Method	SPRUDNS	AMMONIUM MOLYBDATE									

Comments:

SOURCE SAMPLE REQUEST & REPORT

(MUST BE FILLED OUT FOR EACH TEST RUN)

SAMPLING DATE: 73 (YR) | 2 (MO) | 13 (DAY)

FIRST IDENT. NO. USED: S-73-002-524

LAST IDENT. NO. USED: S-73-002-524

TEST NO: 7.3-ROC-1

RUN NO: 2

RECD.

RCRD. 2-26-73

INDUSTRY: Rock Drying & Grinding (USE TABLE A)

UNIT PROCESS OPERATION: Fluid Bed Dryer

COMPANY: I M C

AIR POLLUTION CONTROL: Scrubber

COPIES TO

ADDRESS: Kingsford, Fla.

FUEL USED: No 5 Fuel Oil

P. O.

LAB.

SAMPLING METHOD: N/A

☐ INLET ☒ OUTLET

GAS VOLUME SAMPLED (METER VOL IN FT³): N/A

FILED

IDENT NO	DESCRIPTION OF SAMPLE OR SAMPLE FRACTION	SAMPLE WT (SOLID) MG	SAMPLE VOL (LIQUID) ML	ANALYSIS REQUESTED - GENERAL COMMENTS (APPROX CONCENTRATIONS - POSSIBLE INTERFERENCES ETC) (INDICATE SPECIFIC ANALYSIS ON BACKSIDE)
S-73-002-524	Rock product out of dryer	N/A	N/A	Total Fluorids, P_2O_5 39.9 32.4

COMMENTS:

SAMPLING CONTRACTOR: PEDCo (IF APPLICABLE)

PROJECT OFFICER: Clyde E Riley

REQUEST REVIEWED BY: [signature] 2/22/73

DATE OF REQUEST: 2-22-73

DATE ANALYSIS REQUESTED:

DATE OF REQUEST (TO BE FILLED IN BY SSFAB):

EPA(DUR)245

REPORT OF ANALYSIS
TRACE ELEMENTS
ppm - for solid samples
ug/ml - for liquid samples

Mark (x) for specific analysis
Mark (x) in block to left of Ident. No. when requesting all analysis on that line

Ident No.	Hg	Be	Cd	As	V	Mn	Ni	Sb	Cr	Zn	Cu	Pb	Se	B	F	Li	Ag	Sn	Fe	Sr	Mo	K	Ca	Si	Mg	Ba					Analyst's Initial

Analysis Method: 1-NAA, 2-SSMS, 3-OES, 4-AA, 5-ASV, 6-XRF, and 7-other

Comments:

Other Analysis - Use Table B to fill analysis requested (above each column)

Mark (x) for specific analysis requested

Ident No.	[illegible]	TOTAL P2O5									
002-535	X 39.5 mg/kg	X 33.0%									
Analyst	[illegible]	AR									
Method	EPA DI-2S	AMMONIUM MOLYBDATE									

Comments:

SOURCE SAMPLE REQUEST & REPORT
(MUST BE FILLED OUT FOR EACH TEST RUN)

SAMPLING DATE 73 (YR) 2 (MO) 13 (DAY)

FIRST IDENT. NO. USED S-73-002-535

LAST IDENT. NO. USED S-73-002-535

TEST NO 73-ROC-1

RUN NO 3

RECD. / RCRD. 2-26-73

INDUSTRY Rock ~~Ge~~ Drying + Grinding (USE TABLE A)

UNIT PROCESS OPERATION Fluid Bed Dryer

COMPANY IMC

AIR POLLUTION CONTROL Scrubber

ADDRESS Kingsford, Fla.

FUEL USED No. 5 Fuel Oil

SAMPLING METHOD N/A

☒ INLET ☐ OUTLET

GAS VOLUME SAMPLED (METER VOL IN FT³) N/A

COPIES TO

P. O.

LAB.

FILED

IDENT NO	DESCRIPTION OF SAMPLE OR SAMPLE FRACTION	SAMPLE WT (SOLID) MG	SAMPLE VOL (LIQUID) ML	ANALYSIS REQUESTED - GENERAL COMMENTS (APPROX CONCENTRATIONS - POSSIBLE INTERFERENCES ETC) (INDICATE SPECIFIC ANALYSIS ON BACKSIDE)
S-73-002-535	Raw feed into dryer	N/A	N/A	Total Fluoride, P_2O_5 38.5 33.0

COMMENTS:

SAMPLING CONTRACTOR PEDCO (IF APPLICABLE)

PROJECT OFFICER Clyde E Riley

REQUEST REVIEWED BY [signature] 2/22/73

DATE OF REQUEST 2-21-73

DATE ANALYSIS REQUESTED

DATE OF REQUEST (TO BE FILLED IN BY SSFAB)

EPA(DUR)245

REPORT OF ANALYSIS
TRACE ELEMENTS
ppm - for solid samples
ug/ml - for liquid samples

Mark (x) for specific analysis
Mark (x) in block to left of Ident. No. when requesting all analysis on that line

Ident No.	Hg	Be	Cd	As	V	Mn	Ni	Sb	Cr	Zn	Cu	Pb	Se	B	F	Li	Ag	Sn	Fe	Sr	No	K	Co	Si	Mg	Ba					Analyst's Initial

Analysis Method: 1-NAA, 2-SSMS, 3-OES, 4-AA, 5-ASV, 6-XRF, and 7-other

Comments:

Other Analysis - Use Table B to fill analysis requested (above each column)

Mark (x) for specific analysis requested

Ident No.	TOTAL PHOSPHORUS	TOTAL P.O.C											
83-[illegible]	39.1 ug/ml	X 33.1%											
Analyst	[illegible]	AR											
Method	SPERS	AMMONIUM	MOLYBDATE										

Comments:

REPORT OF ANALYSIS
TRACE ELEMENTS
ppm - for solid samples
ug/ml - for liquid samples

Mark (x) for specific analysis
Mark (x) in block to left of Ident. No. when requesting all analysis on that line

Ident No.	Hg	Be	Cd	As	V	Mn	Ni	Sb	Cr	Zn	Cu	Pb	Se	B	F	Li	Ag	Sn	Fe	Sr	Na	K	Co	Si	Mg	Ba					Analyst's Initial

Analysis Method: 1-NAA, 2-SSMS, 3-OES, 4-AA, 5-ASV, 6-XRF, and 7-other

Comments:

Other Analysis - Use Table B to fill analysis requested (above each column)

Mark (x) for specific analysis requested

Ident No.	SOLUBLE FLUORIDE	INSOLUBLE FLUORIDE								
T2-002-5[illegible]	X <0.01mg									
T3-002-5[illegible]		X <0.01mg								
Analyst	[illegible]	[illegible]								
Method	SPADNS	SPKDNS								

Comments:

SOURCE SAMPLE REQUEST & REPORT
(MUST BE FILLED OUT FOR EACH TEST RUN)

SAMPLING DATE: 73 (YR) | C (MO) | 15 (DAY)

FIRST IDENT. NO. USED: S-73-002-568

LAST IDENT. NO. USED: S-73-002-569

TEST NO: 73-ROC-1

RUN NO: Flange Blanks

RECD. / RCRD.: 2-26-73

INDUSTRY: Rock Drying & Grinding (USE TABLE A)

COMPANY: IMC

ADDRESS: Kingsford, Fla.

SAMPLING METHOD: Fluoride

UNIT PROCESS OPERATION: Fluid Bed Dryer

AIR POLLUTION CONTROL: Scrubber

FUEL USED: No. 5 Fuel Oil

~~INLET~~ ~~OUTLET~~

GAS VOLUME SAMPLED (METER VOL IN FT³): N/A

COPIES TO

P. O.

LAB.

FILED

IDENT NO	DESCRIPTION OF SAMPLE OR SAMPLE FRACTION	SAMPLE WT (SOLID) MG	SAMPLE VOL (LIQUID) ML	ANALYSIS REQUESTED - GENERAL COMMENTS (APPROX CONCENTRATIONS - POSSIBLE INTERFERENCES ETC) (INDICATE SPECIFIC ANALYSIS ON BACKSIDE)
S-73-002-563	Dist. Water Blank	N/A	N/A	determined and subtract blank value from fluoride samples.
-569	3 Filter Blanks (Whatman 41)			
	273c13			S I S Tot
	273c12			
	273c11			
	273c10			<0.06 <0.06 —

COMMENTS:

SAMPLING CONTRACTOR: PEDCO (IF APPLICABLE)

PROJECT OFFICER: Clyde E Riley

REQUEST REVIEWED BY: [illegible] 2/27/73

DATE OF REQUEST: 2-22-73

DATE ANALYSIS REQUESTED:

DATE OF REQUEST (TO BE FILLED IN BY SSFAB)

EPA(DUR)245

Scrubber Water Results (Runs 4, 5, 6)

REPORT OF ANALYSIS
TRACE ELEMENTS
ppm - for solid samples
ug/ml - for liquid samples

Mark (x) for specific analysis
Mark (x) in block to left of Ident. No. when requesting all analysis on that line

Ident No.	Hg	Be	Cd	As	V	Mn	Ni	Sb	Cr	Zn	Cu	Pb	Se	B	F	Li	Ag	Sn	Fe	Sr	Na	K	Ca	Si	Mg	Ba					Analyst's Initial

Analysis Method: 1-NAA, 2-SSMS, 3-OES, 4-AA, 5-ASV, 6-XRF, and 7-other

Comments:

Other Analysis - Use Table B to fill analysis requested (above each column)

Mark (x) for specific analysis requested

Ident No.	TOTAL FLUORIDE		pH	TOTAL PO4						
7[illegible]-002-545	X 0.4 mg/L		X 7.77	X <0.1 mg/L						
Analyst	[illegible]		aR	aR						
Method	SPADNS			AMMONIUM	MOLYBDATE					

Comments:

SOURCE SAMPLE REQUEST & REPORT

(MUST BE FILLED OUT FOR EACH TEST RUN)

SAMPLING DATE: 73 (YR) 2 (MO) 14 (DAY)

FIRST IDENT. NO. USED: S-73-002-545

LAST IDENT. NO. USED: S-73-002-545

TEST NO: 73-RCC-1

RUN NO: 4

RECD. / RCRD.: 2-26-73

INDUSTRY: Rock Drying & Grinding (USE TABLE A)

UNIT PROCESS OPERATION: Fluid Bed Dryer

COMPANY: IMC

AIR POLLUTION CONTROL: Scrubber

ADDRESS: Kingsford, Fla.

FUEL USED: No. 5 Fuel Oil

SAMPLING METHOD: N/A

☒ INLET ☐ OUTLET

GAS VOLUME SAMPLED (METER VOL IN FT³): N/A

COPIES TO: P. O. ____ LAB. ____ FILED ____

IDENT NO	DESCRIPTION OF SAMPLE OR SAMPLE FRACTION	SAMPLE WT (SOLID) MG	SAMPLE VOL (LIQUID) ML	ANALYSIS REQUESTED - GENERAL COMMENTS (APPROX CONCENTRATIONS - POSSIBLE INTERFERENCES ETC) (INDICATE SPECIFIC ANALYSIS ON BACKSIDE)
S-73-002-545	Scrubber inlet water (spring water)	N/A	N/A	Fluorides 1. soluble 2. insoluble Total - 0.4
				P_2O_5 - < 0.1
				pH 7.77

COMMENTS: ____

SAMPLING CONTRACTOR: PEDCO (IF APPLICABLE)

PROJECT OFFICER: Clyde E Riley

REQUEST REVIEWED BY: [signature] 2/23/73

DATE OF REQUEST: 2-22-73

DATE ANALYSIS REQUESTED: ____

DATE OF REQUEST (TO BE FILLED IN BY SSFAB): ____

EPA(DURI)245

REPORT OF ANALYSIS
TRACE ELEMENTS
ppm - for solid samples
ug/ml - for liquid samples

Mark (x) for specific analysis
Mark (x) in block to left of Ident. No. when requesting all analysis on that line

Ident No.	Hg	Be	Cd	As	V	Mn	Ni	Sb	Cr	Zn	Cu	Pb	Se	B	F	Li	Ag	Sn	Fe	Sr	Na	K	Co	Si	Mg	Ba					Analyst's Initial

Analysis Method: 1-NAA, 2-SSMS, 3-OES, 4-AA, 5-ASV, 6-XRF, and 7-other

Comments:

Other Analysis - Use Table B to fill analysis requested (above each column)

Mark (x) for specific analysis requested

Ident No.	TOTAL FLUORIDE		pH	TOTAL P_2O_5						
7[illegible]-002-549	X 1.3mg/L		X 7.60	X 1.4mg/L						
Analyst	[illegible]		AR	AR						
Method	SPADNS			AMMONIUM	MOLYB. VTA					

Comments:

SOURCE SAMPLE REQUEST & REPORT

(MUST BE FILLED OUT FOR EACH TEST RUN)

SAMPLING DATE: 73 (YR) | 2 (MO) | 14 (DAY)

FIRST IDENT. NO. USED: S-73-002-549

LAST IDENT. NO. USED: S-73-002-549

TEST NO: 73-ROC-1

RUN NO: 4

RECD. / RCRD.: 2-26-73

INDUSTRY: Rock Drying & Grinding (USE TABLE A)

COMPANY: IMC

ADDRESS: Kingsford, Fla.

SAMPLING METHOD: N/A

UNIT PROCESS OPERATION: Fluid Bed Dryer

AIR POLLUTION CONTROL: Scrubber

FUEL USED: No. 5 Fuel Oil

☐ INLET ☒ OUTLET

GAS VOLUME SAMPLED (METER VOL IN FT³): N/A

COPIES TO: P. O. / LAB. / FILED

IDENT NO	DESCRIPTION OF SAMPLE OR SAMPLE FRACTION	SAMPLE WT (SOLID) MG	SAMPLE VOL (LIQUID) ML	ANALYSIS REQUESTED - GENERAL COMMENTS (APPROX CONCENTRATIONS - POSSIBLE INTERFERENCES ETC) (INDICATE SPECIFIC ANALYSIS ON BACKSIDE)
S-73-002-547	Scrubb. Outlet Water (Composite sample from Nos S-73-002-546, 547, 548)	N/A	N/A	Fluoride 1. soluble 2. insoluble Total - 1.3
				P₂O₅ 1.4
				pH 7.66
	Please store samples 546, 547, & 548 for future reference.			

COMMENTS:

SAMPLING CONTRACTOR: PEDCO (IF APPLICABLE)

PROJECT OFFICER: Clyde E. Riley

REQUEST REVIEWED BY: JEM 2/23/73

DATE OF REQUEST: 2-22-73

DATE ANALYSIS REQUESTED:

DATE OF REQUEST (TO BE FILLED IN BY SSFAB)

EPA(OUR)245

REPORT OF ANALYSIS
TRACE ELEMENTS
ppm - for solid samples
ug/ml - for liquid samples

Mark (x) for specific analysis
Mark (x) in block to left of Ident. No. when requesting all analysis on that line

Ident No.	Hg	Be	Cd	As	V	Mn	Ni	Sb	Cr	Zn	Cu	Pb	Se	B	F	Li	Ag	Sn	Fe	Sr	Na	K	Ca	Si	Mg	Ba					Analyst's Initial

Analysis Method: 1-NAA, 2-SSMS, 3-UES, 4-AA, 5-ASV, 6-XRF, and 7-other

Comments:

Other Analysis - Use Table B to fill analysis requested (above each column)

Mark (x) for specific analysis requested

Ident No.	TOTAL FLUORIDE		pH	TOTAL P_2O_5							
DJ-002-052	X 0.4 mg/L		X 7.93	X < 0.1 mg/L							
Analyst	DJC & JM		AR	AR							
Method	SPADNS			AMMONIUM MOLYBDATE							

Comments:

SOURCE SAMPLE REQUEST & REPORT

(MUST BE FILLED OUT FOR EACH TEST RUN)

SAMPLING DATE: 73 (YR) | 2 (MO) | 14 (DAY)

FIRST IDENT. NO. USED: S-73-002-552

LAST IDENT. NO. USED: S-73-002-552

TEST NO 73-RCC-1

RUN NO 5

RECD. / RCRD. 2-26-73

INDUSTRY Rock Drying & Grinding (USE TABLE A)

COMPANY IMC

ADDRESS Kingsford, Fla

SAMPLING METHOD N/A

UNIT PROCESS OPERATION Fluid Bed Dryer

AIR POLLUTION CONTROL Scrubber

FUEL USED No. 5 Fuel Oil

☒ INLET ☐ OUTLET

GAS VOLUME SAMPLED (METER VOL IN FT^3)

COPIES TO

P. O.

LAB.

FILED

IDENT NO	DESCRIPTION OF SAMPLE OR SAMPLE FRACTION	SAMPLE WT (SOLID) MG	SAMPLE VOL (LIQUID) ML	ANALYSIS REQUESTED - GENERAL COMMENTS (APPROX CONCENTRATIONS - POSSIBLE INTERFERENCES ETC) (INDICATE SPECIFIC ANALYSIS ON BACKSIDE)
S-73-002-552	Scrubber inlet water (spring water)	N/A	N/A	Fluoride 1. soluble 2. insoluble Total - 0.4 P_2O_5 < 0.1 pH 7.93

COMMENTS:

SAMPLING CONTRACTOR PEDCO (IF APPLICABLE)

PROJECT OFFICER Clyde E. Riley

REQUEST REVIEWED BY [signature] 2/23/73

DATE OF REQUEST 2-21-73

DATE ANALYSIS REQUESTED

DATE OF REQUEST (TO BE FILLED IN BY SSFAB)

EPA(DUR)245

REPORT OF ANALYSIS
TRACE ELEMENTS
ppm - for solid samples
ug/ml - for liquid samples

Mark (x) for specific analysis
Mark (x) in block to left of Ident. No. when requesting all analysis on that line

Ident No.	Hg	Be	Cd	As	V	Mn	Ni	Sb	Cr	Zn	Cu	Pb	Se	B	F	Li	Ag	Sn	Fe	Sr	Mo	K	Ca	Si	Mg	Ba					Analysis Initial

Analysis Method: 1-NAA, 2-SSMS, 3-OES, 4-AA, 5-ASV, 6-XRF, and 7-other

Comments:

Other Analysis - Use Table B to fill analysis requested (above each column)

Mark (x) for specific analysis requested

Ident No.	TOTAL FLUORIDE		pH	TOTAL P_2O_5						
93-002-556	X 1.2 mg/L		X 7.89	X 1.2 mg/L						
Analyst	[illegible]		CLR	AR						
Method	SPAUNS			AMMONIUM MOLYBDATE						

Comments:

SOURCE SAMPLE REQUEST & REPORT
(MUST BE FILLED OUT FOR EACH TEST RUN)

SAMPLING DATE: 73 (YR) | 2 (MO) | 14 (DAY)

FIRST IDENT. NO. USED: S-73-002-556

LAST IDENT. NO. USED: S-73-002-556

TEST NO: 73-RCC-1

RUN NO: 5

RECD. / RCRD.: 2-26-73

INDUSTRY: Rock Drying & Grinding (USE TABLE A)

COMPANY: IMC

ADDRESS: Kingsford, Fla.

SAMPLING METHOD: N/A

UNIT PROCESS OPERATION: Fluid Bed Dryer

AIR POLLUTION CONTROL: Scrubber

FUEL USED: No. 5 Fuel Oil

☐ INLET ☒ OUTLET

GAS VOLUME SAMPLED (METER VOL IN FT³): N/A

COPIES TO

P. O.

LAB.

FILE

IDENT NO	DESCRIPTION OF SAMPLE OR SAMPLE FRACTION	SAMPLE WT (SOLID) MG	SAMPLE VOL (LIQUID) ML	ANALYSIS REQUESTED - GENERAL COMMENTS (APPROX CONCENTRATIONS - POSSIBLE INTERFERENCES ETC) (INDICATE SPECIFIC ANALYSIS ON BACKSIDE)
S-73-002-556	Scrubber Outlet Water (Composite sample from Nos S-73-002-553, 554, 555)	N/A	N/A	Fluoride 1. soluble 2. insoluble Total 1.2
				P_2O_5 1.2
				pH 7.89
	Please store samples 553, 554, & 555 for future reference.			

COMMENTS:

SAMPLING CONTRACTOR: PEDCO (IF APPLICABLE)

PROJECT OFFICER: Clyde E Riley

REQUEST REVIEWED BY: [signature] 2/23/73

DATE OF REQUEST: 2-22-73

DATE ANALYSIS REQUESTED:

DATE OF REQUEST (TO BE FILLED IN BY SSFAB)

EPA(DUR)245

REPORT OF ANALYSIS
TRACE ELEMENTS
ppm - for solid samples
ug/ml - for liquid samples

Mark (x) for specific analysis
Mark (x) in block to left of Ident. No. when requesting all analysis on that line

Ident No.	Hg	Be	Cd	As	V	Mn	Ni	Sb	Cr	Zn	Cu	Pb	Se	B	F	Li	Ag	Sn	Fe	Sr	Na	K	Ca	Si	Mg	Ba					Analyst's Initial

Analysis Method: 1-NAA, 2-SSMS, 3-GLS, 4-AA, 5-ASV, 6-XRF, and 7-other

Comments:

Other Analysis - Use Table B to fill analysis requested (above each column)

Mark (x) for specific analysis requested

Ident No.	TOTAL FLUORIDE		pH	TOTAL P_2O_5							
02-1-C2-561	X 0.11 mg/L		X 7.51	X <0.1 mg/L							
Analyst	DLG+JA		AR	AR							
Method	SPADNS			AMMONIUM	MOLYBDATE						

Comments:

SOURCE SAMPLE REQUEST & REPORT
(MUST BE FILLED OUT FOR EACH TEST RUN)

SAMPLING DATE 73 (YR) 2 (MO) 15 (DAY)

FIRST IDENT. NO. USED S-73-002-561

LAST IDENT. NO. USED S-73-002-561

TEST NO 73-ROC-1

RUN NO 6

RECD. / RCRD. 2-26-73

INDUSTRY Rock drying & Grinding (USE TABLE A)

UNIT PROCESS OPERATION Fluid Bed Dryer

COMPANY IMC

AIR POLLUTION CONTROL Scrubber

ADDRESS Kingsford Fla.

COPIES TO

FUEL USED No. 5

P. O.

☐ INLET ☐ OUTLET

LAB.

SAMPLING METHOD N/A

GAS VOLUME SAMPLED (METER VOL IN FT^3)

FILED

IDENT NO	DESCRIPTION OF SAMPLE OR SAMPLE FRACTION	SAMPLE WT (SOLID) MG	SAMPLE VOL (LIQUID) ML	ANALYSIS REQUESTED - GENERAL COMMENTS (APPROX CONCENTRATIONS - POSSIBLE INTERFERENCES ETC) (INDICATE SPECIFIC ANALYSIS ON BACKSIDE)
S-73-002-561	Scrubber inlet water (spring water)	N/A	N/A	Fluoride 1. soluble 2. insoluble Total 0.4 P.O.S. < 0.1 pH 7.31

COMMENTS:

SAMPLING CONTRACTOR PEDCO (IF APPLICABLE)

PROJECT OFFICER Clyde E. Riley

REQUEST REVIEWED BY JEW 2/23/73

DATE OF REQUEST 2-22-73

DATE ANALYSIS REQUESTED

DATE OF REQUEST (TO BE FILLED IN BY SSFAB)

EPA(DUR)245

REPORT OF ANALYSIS
TRACE ELEMENTS
ppm - for solid samples
ug/ml - for liquid samples

Mark (x) for specific analysis
Mark (x) in block to left of Ident. No. when requesting all analysis on that line

Ident No.	Hg	Be	Cd	As	V	Mn	Ni	Sb	Cr	Zn	Cu	Pb	Se	B	F	Li	Ag	Sn	Fe	Sr	Na	K	Ca	Si	Mg	Ba					Analyst's Initial

Analysis Method: 1-NAA, 2-SSMS, 3-OES, 4-AA, 5-ASV, 6-XRF, and 7-other

Comments:

Other Analysis - Use Table B to fill analysis requested (above each column)

Mark (x) for specific analysis requested

Ident No.	TOTAL FLUORIDE		pH	TOTAL PHOS						
73-002-565	X 1.1mg/L		X 7.66	X 1.4mg/L						
Analyst	DM + JM		aR	aR						
Method	SPADNS			AMMONIUM	MOLYBDATE					

Comments:

SOURCE SAMPLE REQUEST & REPORT
(MUST BE FILLED OUT FOR EACH TEST RUN)

SAMPLING DATE: 73 (YR) | 2 (MO) | 15 (DAY)

FIRST IDENT. NO. USED: 73-002-565

LAST IDENT. NO. USED: 73-002-565

TEST NO: 73-ROC-1

RUN NO: 6

RECD. / RCRD.: 2-26-73

INDUSTRY: Rock Drying & Grinding (USE TABLE A)

UNIT PROCESS OPERATION: Fluid Bed Dryer

COMPANY: IMC

AIR POLLUTION CONTROL: Scrubber

ADDRESS: Kingsford, Fla.

FUEL USED: No. 5 Fuel Oil

COPIES TO: P. O. / LAB. / FILED

☐ INLET ☒ OUTLET

SAMPLING METHOD: N/A

GAS VOLUME SAMPLED (METER VOL IN FT³): N/A

IDENT NO	DESCRIPTION OF SAMPLE OR SAMPLE FRACTION	SAMPLE WT (SOLID) MG	SAMPLE VOL (LIQUID) ML	ANALYSIS REQUESTED - GENERAL COMMENTS (APPROX CONCENTRATIONS - POSSIBLE INTERFERENCES ETC) (INDICATE SPECIFIC ANALYSIS ON BACKSIDE)
S-73-002-565	Scrubber outlet water (Composite sample from Nos. S-73-002-562, 563, 564)	N/A	N/A	F fluoride 1. soluble 2. insoluble Total 1.1
				P_2O_5 - 1.4
				pH 7.66
	Please store samples 562, 563, & 564 for future reference.			

COMMENTS:

SAMPLING CONTRACTOR: PEDCo (IF APPLICABLE)

PROJECT OFFICER: Clyde E. Riley

REQUEST REVIEWED BY: [signature] 2/27/73

DATE OF REQUEST: 2-22-73

DATE ANALYSIS REQUESTED:

DATE OF REQUEST (TO BE FILLED IN BY SSFAB)

EPA(DUR)245

Rock Material Results (Runs 1 through 6)

REPORT OF ANALYSIS
TRACE ELEMENTS
ppm - for solid samples
ug/ml - for liquid samples

Mark (x) for specific analysis
Mark (x) in block to left of Ident. No. when requesting all analysis on that line

Ident No.	Hg	Be	Cd	As	V	Mn	Ni	Sb	Cr	Zn	Cu	Pb	Se	B	F	[illegible]	[illegible]	Sn	Fe	Sr	Na	K	Ca	Si	Mg	Ba					

Analysis Method: 1-NAA, 2-SSMS, 3-OES, 4-AA, 5-ASV, 6-XRF, and 7-other

Comments:

Other Analysis - Use Table B to fill analysis requested (above each column)

Mark (x) for specific analysis requested

Ident No.	TOTAL FLUORIDE	TOTAL P.O.C.								
73-C[illegible]-511	X 33.9 mg/gm	X 31.1%								
Analyst	[illegible]	AR								
Method	SPILLING	AMMONIUM MOLYBDATE								

Comments:

SOURCE SAMPLE REQUEST & REPORT

(MUST BE FILLED OUT FOR EACH TEST RUN)

SAMPLING DATE 73 (YR) 2 (MO) 12 (DAY)

FIRST IDENT. NO. USED S-73-002-511

LAST IDENT. NO. USED S-73-002-511

TEST NO 73-RCC-1

RUN NO 1

RCRD 2-26-73

INDUSTRY Rock Drying & Grinding (USE TABLE A)

UNIT PROCESS OPERATION Fluid Bed Dryer

COMPANY IMC

AIR POLLUTION CONTROL Scrubber

COPIES TO

ADDRESS Kingsford, Fla.

FUEL USED No. 5 Fuel Oil

P. O. LAB 4-11-73

SAMPLING METHOD N/A grab

☒ INLET ☐ OUTLET

GAS VOLUME SAMPLED (METER VOL IN FT³) N/A

FILED

IDENT NO	DESCRIPTION OF SAMPLE OR SAMPLE FRACTION	SAMPLE WT (SOLID) MG	SAMPLE VOL (LIQUID) ML	ANALYSIS REQUESTED - GENERAL COMMENTS (APPROX CONCENTRATIONS - POSSIBLE INTERFERENCES ETC) (INDICATE SPECIFIC ANALYSIS ON BACKSIDE)
S-73-002-511	Raw feed into dryer	N/A	N/A	Total Fluoride, P₂O₅ 33.9 mg/gm, 31.1 g/g

COMMENTS:

SAMPLING CONTRACTOR PEDCo (IF APPLICABLE)

PROJECT OFFICER Clyde E. Riley

REQUEST REVIEWED BY [signature] 2/22/73

DATE OF REQUEST 2-22-73

DATE ANALYSIS REQUESTED

DATE OF REQUEST (TO BE FILLED IN BY SSFAB)

EPA-DUP-235

REPORT OF ANALYSIS
TRACE ELEMENTS
ppm - for solid samples
ug/ml - for liquid samples

Mark (x) for specific analysis
Mark (x) in block to left of Ident. No. when requesting all analysis on that line

Ident No.	Hg	Be	Cd	As	V	Mn	Ni	Sb	Cr	Zn	Cu	Pb	Se	B	F	Li	Ag	Sn	Fe	Sr	Na	K	Ca	Si	Mg	Ba					Analyst's Initial

Analysis Method: 1-NAA, 2-SSMS, 3-OES, 4-AA, 5-ASV, 6-XRF, and 7-other

Comments:

Other Analysis - Use Table B to fill analysis requested (above each column)

Mark (x) for specific analysis requested

Ident No.	TOTAL FLUORIDE	TOTAL PIPE								
73-002-512	X 36.2 mg/g	X 31.8%								
Analyst	DYM + S.M.	AR								
Method	SPADNS	AMMONIUM MOLYBDATE								

Comments:

SOURCE SAMPLE REQUEST & REPORT

(MUST BE FILLED OUT FOR EACH TEST RUN)

SAMPLING DATE: 73 (YR) | 2 (MO) | 13 (DAY)

FIRST IDENT. NO. USED: S-73-002-536

LAST IDENT. NO. USED: S-73-002-536

TEST NO: 73-ROC-1

RUN NO: 3

RECD.

RCRD. 2-26-73

INDUSTRY: Rock Drying & Grinding (USE TABLE A)

COMPANY: IMC

ADDRESS: Kingsford, Fla.

SAMPLING METHOD: N/A

UNIT PROCESS OPERATION: Fluid Bed Dryer

AIR POLLUTION CONTROL: Scrubber

FUEL USED: No 5 Fuel Oil

☐ INLET ☒ OUTLET

GAS VOLUME SAMPLED (METER VOL IN FT³): N/A

COPIES TO

P. O.

LAB.

FILED

IDENT NO	DESCRIPTION OF SAMPLE OR SAMPLE FRACTION	SAMPLE WT (SOLID) MG	SAMPLE VOL (LIQUID) ML	ANALYSIS REQUESTED - GENERAL COMMENTS (APPROX CONCENTRATIONS - POSSIBLE INTERFERENCES ETC) (INDICATE SPECIFIC ANALYSIS ON BACKSIDE)
S-73-002-536	Rock product out of dryer	N/A	N/A	Total Fluoride / P_2O_5 38.2 / 33.1

COMMENTS:

SAMPLING CONTRACTOR: PEDCO (IF APPLICABLE)

PROJECT OFFICER: Clyde E Riley

REQUEST REVIEWED BY: [signature] 4/24/73

DATE OF REQUEST: 2-22-73

DATE ANALYSIS REQUESTED:

DATE OF REQUEST (TO BE FILLED IN BY SSFAB):

EPA(DUR)245

REPORT OF ANALYSIS
TRACE ELEMENTS
ppm - for solid samples
ug/ml - for liquid samples

Mark (x) for specific analysis
Mark (x) in block to left of Ident. No. when requesting all analysis on that line

Ident No.	Hg	Be	Cd	As	V	Mn	Ni	Sb	Cr	Zn	Cu	Pb	Se	B	F	Li	Ag	Sn	Fe	Sr	Mo	K	Co	Si	Mg	Ba					Analyst's Initial

Analysis Method: 1-NAA, 2-SSMS, 3-OES, 4-AA, 5-ASV, 6-XRF, and 7-other

Comments:

Other Analysis - Use Table B to fill analysis requested (above each column)

Mark (x) for specific analysis requested

Ident No.	TOTAL [illegible]	TOTAL P_2O_5											
73-002-542	☒ 38.6 mg/g	☒ 31.8 %											
Analyst	[illegible]	AR											
Method #	SPADNS	AMMONIUM MOLYBDATE											

Comments:

SOURCE SAMPLE REQUEST & REPORT

(MUST BE FILLED OUT FOR EACH TEST RUN)

SAMPLING DATE: 73 (YR) | 2 (MO) | 14 (DAY)

FIRST IDENT. NO. USED: S-73-002-543

LAST IDENT. NO. USED: S-73-002-543

TEST NO: 73-REC-1

RUN NO: 4

RECD.

RCRD. 2-26-73

INDUSTRY: Rock Drying + Grinding (USE TABLE A)

COMPANY: IMC

ADDRESS: Kingsford, Fla.

SAMPLING METHOD: N/A

UNIT PROCESS OPERATION: Fluid Bed Dryer

AIR POLLUTION CONTROL: Scrubber

FUEL USED: No. 5 Fuel Oil

☒ INLET ☐ OUTLET

GAS VOLUME SAMPLED (METER VOL IN FT³): N/A

COPIES TO

P. O.

LAB.

FILE

IDENT NO	DESCRIPTION OF SAMPLE OR SAMPLE FRACTION	SAMPLE WT (SOLID) MG	SAMPLE VOL (LIQUID) ML	ANALYSIS REQUESTED - GENERAL COMMENTS (APPROX CONCENTRATIONS - POSSIBLE INTERFERENCES ETC) (INDICATE SPECIFIC ANALYSIS ON BACKSIDE)
S-73-002-543	Raw feed into dryer	N/A	N/A	Total Fluorids, P_2O_5 38.6, 31.8

COMMENTS:

SAMPLING CONTRACTOR: PEDCO (IF APPLICABLE)

PROJECT OFFICER: Clyde E Riley

REQUEST REVIEWED BY: [illegible] 4/2/73

DATE OF REQUEST: 2-22-73

DATE ANALYSIS REQUESTED:

DATE OF REQUEST (TO BE FILLED IN BY SSFAB):

EPA(DUR)245

REPORT OF ANALYSIS
TRACE ELEMENTS
ppm - for solid samples
ug/ml - for liquid samples

Mark (x) for specific analysis
Mark (x) in block to left of Ident. No. when requesting all analysis on that line

Ident No.	Hg	Be	Cd	As	V	Mn	Ni	Sb	Cr	Zn	Cu	Pb	Se	B	F	Li	Ag	Sn	Fe	Sr	Na	K	Ca	Si	Mg	Ba					Analyst's Initial

Analysis Method: 1-NAA, 2-SSMS, 3-OES, 4-AA, 5-ASV, 6-XRF, and 7-other

Comments:

Other Analysis - Use Table B to fill analysis requested (above each column)

Mark (x) for specific analysis requested

Ident No.	[illegible]	TOTAL P.O5								
[illegible]-602-544	X 35.5mg/ml	X 30.9%								
Analyst	[illegible]	AR								
Method	SIMONS	AMMONIUM MOLYBDATE								

Comments:

SOURCE SAMPLE REQUEST & REPORT

(MUST BE FILLED OUT FOR EACH TEST RUN)

SAMPLING DATE: YR 73 | MO 2 | DAY 14

FIRST IDENT. NO. USED: S-73-002-544

LAST IDENT. NO. USED: S-73-002-544

TEST NO: 73-ROC-1

RUN NO: 4

RECD. / RCRD.: 2-26-73

INDUSTRY: Rock Drying & Grinding (USE TABLE A)

UNIT PROCESS OPERATION: Fluid Bed Dryer

COMPANY: IMC

AIR POLLUTION CONTROL: Scrubber

ADDRESS: Kingsford, Fla.

FUEL USED: No. 5 Fuel Oil

COPIES TO: P. O. / LAB. / FILED

SAMPLING METHOD: N/A

☐ INLET ☒ OUTLET

GAS VOLUME SAMPLED (METER VOL IN FT³): N/A

IDENT NO	DESCRIPTION OF SAMPLE OR SAMPLE FRACTION	SAMPLE WT (SOLID) MG	SAMPLE VOL (LIQUID) ML	ANALYSIS REQUESTED - GENERAL COMMENTS (APPROX CONCENTRATIONS - POSSIBLE INTERFERENCES ETC) (INDICATE SPECIFIC ANALYSIS ON BACKSIDE)
S-73-002-544	Rock product out of dryer	N/A	N/A	Total Fluoride, 33.5 / P_2O_5 32.9

COMMENTS:

SAMPLING CONTRACTOR: PEDCO (IF APPLICABLE)

PROJECT OFFICER: Clyde E. Riley

REQUEST REVIEWED BY: [signature] 2/27/73

DATE OF REQUEST: 2-22-73

DATE ANALYSIS REQUESTED:

DATE OF REQUEST (TO BE FILLED IN BY SSFAB):

EPA(DUR)245

REPORT OF ANALYSIS
TRACE ELEMENTS
ppm - for solid samples
ug/ml - for liquid samples

Mark (x) for specific analysis
Mark (x) in block to left of Ident. No. when requesting all analysis on that line

Ident No.	Hg	Be	Cd	As	V	Mn	Ni	Sb	Cr	Zn	Cu	Pb	Se	B	F	Li	Ag	Sn	Fe	Sr	Na	K	Ca	Si	Mg	Ba					Analyst's Initial

Analysis Method: 1-NAA, 2-SSMS, 3-OES, 4-AA, 5-ASV, 6-XRF, and 7-other

Comments:

Other Analysis - Use Table B to fill analysis requested (above each column)

Mark (x) for specific analysis requested

Ident No.	TOTAL FLUORIDE	TOTAL P_2O_5								
73-002-557	X 36.9 mg/gm	X 31.5%								
Analyst	[illegible]	AR								
Method	SPADNS	AMMONIUM MOLYBDATE								

Comments:

SOURCE SAMPLE REQUEST & REPORT

(MUST BE FILLED OUT FOR EACH TEST RUN)

SAMPLING DATE: 73 (YR) | 2 (MO) | 14 (DAY)

FIRST IDENT. NO. USED: 5-73-002-557

LAST IDENT. NO. USED: 5-73-002-557

TEST NO: 73-ROC-1

RUN NO: 5

RECD. / RCRD.: 2-26-73

INDUSTRY: Rock Drying & Grinding (USE TABLE A)

COMPANY: IMC

ADDRESS: Kingsford, Fla.

SAMPLING METHOD: N/A

UNIT PROCESS OPERATION: Fluid Bed Dryer

AIR POLLUTION CONTROL: Scrubber

FUEL USED: No. 5 Fuel Oil

☒ INLET ☐ OUTLET

GAS VOLUME SAMPLED (METER VOL IN FT^3): N/A

COPIES TO: P. O. / LAB. / FILE

IDENT NO	DESCRIPTION OF SAMPLE OR SAMPLE FRACTION	SAMPLE WT (SOLID) MG	SAMPLE VOL (LIQUID) ML	ANALYSIS REQUESTED - GENERAL COMMENTS (APPROX CONCENTRATIONS - POSSIBLE INTERFERENCES ETC) (INDICATE SPECIFIC ANALYSIS ON BACKSIDE)
5-73-002-557	Raw feed into dryer	N/A	N/A	Total fluoride, P_2O_5 36.9, 31.5

COMMENTS:

SAMPLING CONTRACTOR: PEDCo (IF APPLICABLE)

PROJECT OFFICER: Clyde E Riley

REQUEST REVIEWED BY: [signature] 3/6/73

DATE OF REQUEST: 2-12-73

DATE ANALYSIS REQUESTED:

DATE OF REQUEST (TO BE FILLED IN BY SSFAB):

EPA(DUR)245

REPORT OF ANALYSIS
TRACE ELEMENTS
ppm - for solid samples
ug/ml - for liquid samples

Mark (x) for specific analysis
Mark (x) in block to left of Ident. No. when requesting all analysis on that line

Ident No.	Hg	Be	Cd	As	V	Mn	Ni	Sb	Cr	Zn	Cu	Pb	Se	B	F	Li	Ag	Sn	Fe	Sr	Na	K	Ca	Si	Mg	Ba					Analyst's Initial

Analysis Method: 1-NAA, 2-SSMS, 3-OES, 4-AA, 5-ASV, 6-XRF, and 7-other

Comments:

Other Analysis - Use Table B to fill analysis requested (above each column)

Mark (x) for specific analysis requested

Ident No.	TOTAL FLUORIDE	TOTAL PCS								
75-002-558	X 37.1mg/ml	X 30.7%								
Analyst	[illegible]	CLR								
Method	SPADNS	AMMONIUM	MOLYBDATE							

Comments:

SOURCE SAMPLE REQUEST & REPORT
(MUST BE FILLED OUT FOR EACH TEST RUN)

SAMPLING DATE: 73 (YR) | 2 (MO) | 14 (DAY)

FIRST IDENT. NO. USED: S-73-002-558

LAST IDENT. NO. USED: S-73-002-558

TEST NO: 73-ROC-1

RUN NO: 5

RECD.

RCRD.: 2-26-73

INDUSTRY: Rock Drying & Grinding (USE TABLE A)

UNIT PROCESS OPERATION: Fluid Bed dryer

COMPANY: IMC

AIR POLLUTION CONTROL: Scrubber

COPIES TO

ADDRESS: Kingsford, Fla.

FUEL USED: No. 5 Fuel Oil

P. O.

SAMPLING METHOD: N/A

☐ INLET ☒ OUTLET

GAS VOLUME SAMPLED (METER VOL IN FT³): N/A

LAB.

FILED

IDENT NO	DESCRIPTION OF SAMPLE OR SAMPLE FRACTION	SAMPLE WT (SOLID) MG	SAMPLE VOL (LIQUID) ML	ANALYSIS REQUESTED - GENERAL COMMENTS (APPROX CONCENTRATIONS - POSSIBLE INTERFERENCES ETC) (INDICATE SPECIFIC ANALYSIS ON BACKSIDE)
S-73-002-558	Rock product out of dryer	N/A	N/A	Total fluoride, P_2O_5 37.1, 30.7

COMMENTS:

SAMPLING CONTRACTOR: PEDCO (IF APPLICABLE)

PROJECT OFFICER: Clyde E. Riley

REQUEST REVIEWED BY: [signature] 2/27/73

DATE OF REQUEST: 1-22-73

DATE ANALYSIS REQUESTED:

DATE OF REQUEST (TO BE FILLED IN BY SSFAB)

EPA(DUR)245

REPORT OF ANALYSIS
TRACE ELEMENTS
ppm - for solid samples
ug/ml - for liquid samples

Mark (x) for specific analysis
Mark (x) in block to left of Ident. No. when requesting all analysis on that line

Ident No.	Hg	Be	Cd	As	V	Mn	Ni	Sb	Cr	Zn	Cu	Pb	Se	B	F	Li	Ag	Sn	Fe	Sr	Na	K	Co	Si	Mg	Ba					Analyst's Initial

Analysis Method: 1-NAA, 2-SSMS, 3-OES, 4-AA, 5-ASV, 6-XRF, and 7-other

Comments:

Other Analysis - Use Table B to fill analysis requested (above each column)

Mark (x) for specific analysis requested

Ident No.	TOTAL FLUORIDE	TOTAL P_2O_5								
73-002-566	X 35.5 mg/gm	X 32.4 %								
Analyst	[illegible]	a-R								
Method	SPADNS	AMMONIUM MOLYBDATE								

Comments:

SOURCE SAMPLE REQUEST & REPORT
(MUST BE FILLED OUT FOR EACH TEST RUN)

SAMPLING DATE: 73 (YR) | 2 (MO) | 15 (DAY)

FIRST IDENT. NO. USED: S-73-002-566

LAST IDENT. NO. USED: S-73-002-566

TEST NO: 73-ROC-1

RUN NO: 6

RECD / PCRD: 2-26-73

INDUSTRY: Rock Drying & Grinding (USE TABLE A)

UNIT PROCESS OPERATION: Fluid Bed Dryer

COMPANY: IMC

AIR POLLUTION CONTROL: Scrubber

ADDRESS: Kingsford, Fla.

FUEL USED: No 5 Fuel Oil

SAMPLING METHOD: N/A

☒ INLET ☐ OUTLET

GAS VOLUME SAMPLED (METER VOL IN FT³): N/A

COPIES TO: P. C. / LAB / FILES

IDENT NO	DESCRIPTION OF SAMPLE OR SAMPLE FRACTION	SAMPLE WT (SOLID) MG	SAMPLE VOL (LIQUID) ML	ANALYSIS REQUESTED - GENERAL COMMENTS (APPROX CONCENTRATIONS - POSSIBLE INTERFERENCES ETC) (INDICATE SPECIFIC ANALYSIS ON BACKSIDE)
S73-002-566	Raw feed into dryer	N/A	N/A	Total Fluoride, P_2O_5 38.5, 32.4

COMMENTS:

SAMPLING CONTRACTOR: PEDCO (IF APPLICABLE)

PROJECT OFFICER: Clyde E. Riley

REQUEST REVIEWED BY: [signature] 4/6/73

DATE OF REQUEST: 2-22-73

DATE ANALYSIS REQUESTED:

DATE OF REQUEST (TO BE FILLED IN BY SSFAB):

EPA(OUR)245

REPORT OF ANALYSIS
TRACE ELEMENTS
ppm - for solid samples
ug/ml - for liquid samples

Mark (x) for specific analysis
Mark (x) in block to left of Ident. No. when requesting all analysis on that line

Ident No.	Hg	Be	Cd	As	V	Mn	Ni	Sb	Cr	Zn	Cu	Pb	Se	B	F	Li	Ag	Sn	Fe	Sr	Na	K	Co	Si	Mg	Ba					Analyst's Initial

Analysis Method: 1-NAA, 2-SSMS, 3-OES, 4-AA, 5-ASV, 6-XRF, and 7-other

Comments:

Other Analysis - Use Table B to fill analysis requested (above each column)

Mark (x) for specific analysis requested

Ident No.	TOTAL FLUORIDE	TOTAL P_2O_5											
TP-002-567	[X] 334 mg/L	[X] 33.8%											
Analyst	DMC + TM	AR											
Method	SPADNS	AMMONIUM MOLYBDATE											

Comments:

SOURCE SAMPLE REQUEST & REPORT
(MUST BE FILLED OUT FOR EACH TEST RUN)

SAMPLING DATE: 73 (YR) | 2 (MO) | 15 (DAY)

FIRST IDENT. NO. USED: S-73-002-567

LAST IDENT. NO. USED: S-73-002-567

TEST NO: 73-ROC-1

RUN NO: 6

RECD. / RCRD.: 2-26-73

INDUSTRY: Rock Drying & Grinding (USE TABLE A)

UNIT PROCESS OPERATION: Fluid Bed Dryer

COMPANY: IMC

AIR POLLUTION CONTROL: Scrubber

COPIES TO

ADDRESS: Kingsford, Fla.

FUEL USED: No 5 Fuel Oil

P. C.

☐ INLET ☒ OUTLET

SAMPLING METHOD: N/A

GAS VOLUME SAMPLED (METER VOL IN FT³): N/A

LAB.

FILED

IDENT NO	DESCRIPTION OF SAMPLE OR SAMPLE FRACTION	SAMPLE WT (SOLID) MG	SAMPLE VOL (LIQUID) ML	ANALYSIS REQUESTED - GENERAL COMMENTS (APPROX CONCENTRATIONS - POSSIBLE INTERFERENCES ETC) (INDICATE SPECIFIC ANALYSIS ON BACKSIDE)
S-73-002-567	Rock product out of dryer	N/A	N/A	T.F.F. Fluoride, P_2O_5 39.4 33.8

COMMENTS:

SAMPLING CONTRACTOR: PEDCO (IF APPLICABLE)

PROJECT OFFICER: Clyde E. Riley

REQUEST REVIEWED BY: [signature] 2/26/73

DATE OF REQUEST: 2-22-73

DATE ANALYSIS REQUESTED:

DATE OF REQUEST (TO BE FILLED IN BY SSFAB)

EPA(DUR)245

Appendix G. Sample Number Log

The EPA Contract Officer designated sample numbers and labeled polyethelene and glass (Wheaton) bottles. There was no difficulty in keeping samples straight since all clean up immediately followed test runs. All filters were numbered and logged in the emission testing data sheets to eliminate any possibility of mixup. Table G1 identifies the number assigned to the pollutant fraction from each area and run.

TABLE G1

IMC

Kingsford, Florida

Sample Identification Log

Run No. Part 1		Date February 12, 1973
Sample No.	Sampled Area	Fraction
S-73-002-501	Dryer Inlet	Probe acetone wash
502	" "	Filter
503	" "	Impinger H_2O + wash
504	" "	Ether-Chloroform ext.
505	" "	Impinger acetone wash
506	Dryer Outlet	Probe acetone wash
507	" "	Filter
508	" "	Impinger H_2O + wash
509	" "	Ether-chloroform ext.
510	" "	Impinger acetone wash
511	Dryer	Raw-rock in
512	"	Product rock out

Run No. Part 2		Date February 13, 1973
Sample No.	Sampled Area	Fraction
513	Dryer Inlet	Probe acetone wash
514	" "	Filter
515	" "	Impinger H_2O + wash
516	" "	Ether-chloroform ext.
517	" "	Impinger acetone wash
S-73-002-518	Dryer Outlet	Probe acetone wash
519	" "	Filter
520	" "	Impinger H_2O + wash
521	" "	Ether-chloroform ext.
522	" "	Impinger acetone wash
S-73-002-523	Dryer	Raw rock in
524	"	Product rock out

Run No. Part 3		Date February 13, 1973
S-73-002-525	Dryer Inlet	Probe acetone wash
526	" "	Filter
527	" "	Impinger H_2O + wash
528	" "	Ether-chloroform ext.
529	" "	Impinger acetone wash

Sample No.	Sampled Area	Fraction
S-73-006-530	Dryer Outlet	Probe acetone wash
531	" "	Filter
532	" "	Impinger H_2O + wash
533	" "	Ether-chloroform ext.
534	" "	Impinger acetone wash
S-73-002-535	Dryer	Raw rock in
536	"	Product rock out
537	Kingsford Dryer	Water blank
538	" "	Acetone blank
539	" "	Ether-chloroform blank
540	" "	3-Trace metal blank filter

Run No. Fluoride 1 — Date February 14, 1973

S-73-002-541	Dryer Inlet	Train contents & wash
542	Dryer Outlet	Train contents & wash
543	Dryer	Raw rock in
544	"	Product rock out
545	Scrubber Inlet	Inlet water
546	Scrubber Outlet	No. 1 water sample
547	" "	No. 2 water sample
548	" "	No. 3 water sample
549	" "	Composite of Nos. 1,2,3

Run No. Fluoride 2 — Date February 14, 1973

S-73-002-550	Dryer Inlet	Train contents & wash
551	Dryer Outlet	Train contents & wash
552	Scrubber Inlet	Inlet water
553	Scrubber Outlet	No. 1 water sample
554	" "	No. 2 water sample
555	" "	No. 3 water sample
556	" "	Composite of Nos. 1, 2,3
557	Dryer	Raw rock in
558	"	Product rock out

Run No. Fluoride 3

Date February 15, 1973

Sample No.	Sampled Area	Fraction
S-73-002-559	Dryer Inlet	Train contents & wash
560	Dryer Outlet	Train contents & wash
561	Scrubber Inlet	Inlet water
562	Scrubber Outlet	No. 1 water sample
563	" "	No. 2 water sample
564	" "	No. 3 water sample
565	" "	Composite of Nos. 1,2,3
566	Dryer	Raw rock in
567	"	Product rock out
568	"	Water blank
569	"	Whatman filter blank
570	Dryer-Run 1 Fluoride	No. 5 Bunker "C" oil
571	" Run 2 Fluoride	No. 5 Bunker "C" oil
576	" Run 3 Fluoride	No. 5 Bunker "C" oil

Appendix H. Test Log

The field crew chief kept a log of the daily activities during the test duration. Equipment preparation, transportation time, and report preparation was not logged in this manner.

The overall log is shown in Figure H1 in its original format. A more precise log defining sampling time is shown in Figure H2.

Figure H1. Overall Log

CHRONOLOGICAL LIST OF NOTES THROUGHOUT PROJECT _____ (NOT COVERED BY DAILY PERSONNEL AND LOG SHEET)

DATE	TIME	EVENT
1993 2-12	0730	Crew Starts out for IMC Rock Drying Site in Kingsford
	0800	Crew arrives at Kingsford and has Safety Meeting
	0845	Start assembling Equipment - all platforms and scaffolding is in good condition
	0930	Moisture run performed on inlet - 32% moisture - is saturated and therefore outlet is assumed saturated also.
	1230	Equipment is in place - Sampling train is assembled
	1330	All set to go - no power on dryer outlet - probe sets
	1440	Outlet starts on Point A Test # 1 particulate
	1445	Inlet starts on Point B Test #1 particulate
	1645	Inlet finishes on Point B Test # 1 particulate
	1745	Outlet finishes on Point A Test # 1 particulate
	1930	Crew is finished cleaning up first particulate test — 11.5 hours test time
2-13	0720	Crew Starts out for IMC Rock Drying Site
	0800	Crew arrives in Kingsford and starts setting up
	0915	Inlet and Outlet start test # 2 Particulate
	1100	Conveyor Belt carrying finished product breaks - down time starts
	1235	On line again, wait for process stabilization
	1250	Resume test # 2 on inlet and outlet (Orsat determined during down time)
	1335	Inlet finishes on Point B Test # 2 particulate
	1410	Outlet finishes on Point A Test # 2 particulate
	1440	Outlet starts on Point A Test # 3 particulate
	1445	Inlet starts on Point B Test # 3 particulate
	1710	Inlet finishes on Point B test # 3 particulate
	1930	Orsat performed on Inlet and Outlet.
	1900	Crew is finished [illegible] — 11.0 hours test time
	2030	Ed Meer and Al O'Conner work on bad pump - Ed Meer finishes
	2400	Al O'conner finishes working on bad pump

CHRONOLOGICAL LIST OF NOTES THROUGHOUT PROJECT _____ (NOT COVERED BY DAILY PERSONNEL AND LOG SHEET)

DATE	TIME	EVENT
1973 2-14	0720	Crew starts out for Kingsford Fish Drying Site
	0750	Crew arrives and sets up inlet and Outlet fluoride trains
	0845	Ready to go on outlet and inlet - no EPA personnel on site to give ok
	0910	PEPCo crew starts sampling on inlet and outlet. R. Hearon from IMC says he will take all process readings
	1120	Inlet finishes on Point B Test #4 Fluoride
	1230	Outlet finishes on Point A Test #4 Fluoride
	1345	Inlet and Outlet start Test #5 Fluoride
*	1620	Outlet runs into problems with pitot tube its plugged on both probes. After cleaned, they seem to be working okay again. However, flow rate from outlet was subsequently low a little low.
	1635	Inlet finishes on Point B Test #5 Fluoride
	1650	Outlet finishes on Point A Test #5 Fluoride
	1820	Crew is done with cleanup on Test #5 — 10.5 hours test time
2-15	0730	Crew starts out for Kingsford Fish Drying Site
	0800	Crew arrives and starts to set up equipment
	0850	Outlet starts on point A Test #6 Fluoride
	0905	Inlet starts on point B Test #6 Fluoride
	1150	Inlet plugs up on bottom port - blows filter. Filter is changed and testing resumes.
	1147	Outlet finishes on point A Test #6 Fluoride
	1225	Inlet finishes on point B Test #6 Fluoride
	1330	Crew packs up and starts for NORALYN
	1415	Arrive at Noralyn IMC plant - can't go through to site because of work on tracks

* After comparing reading with previous data, it appears pitot tube readings may be correct.

FIGURE H2.

.IMC Testing-Kingsford Plant

Dryer Location

Date	Location	Port	Run	Pollutant	Clock Time Began	Clock Time Ended	Elapsed Time	Comments
2-12-73	Inlet	E	1	Part.	1441	1501	20	
		D			1507	1527	20	
		C			1530	1550	20	
		B			1601	1621	20	
		A			1626	1646	20	
							100 Total	
2-12-73	Outlet	A	1	Part.	1435	1514	39	
		A			1530	1603	33	
		B			1621	1657	36	
		B			1710	1746	36	
							144 Total	
2-13-73	Inlet	A	2	Part.	0916	0941	25	
		B			0945	1010	25	
		C			1015	1040	25	conveyor belt down
		D			1052	1100	8	
		D			1251	1308	17	process started at 12:35
		E			1310	1335	25	
							125 Total	
2-13-73	Outlet	A	2	Part.	0915	0951	36	
		A			0958	1034	36	
		B			1045	1100	15	
		B			1310	1331	21	conveyor belt down
		B			1335	1411	36	
							144 Total	
2-13-73	Inlet	E	3	Part.	1443	1508	25	
		D			1514	1539	25	
		C			1542	1607	25	
		B			1615	1640	25	
		A			1645	1710	25	
							125 Total	

Date	Location	Port	Run	Pollutant	Clock Time Began	Clock Time Ended	Elapsed Time	Comments
2-13-73	Outlet	A	3	Part.	1440	1516	36	
		A			1550	1626	36	
		B			1640	1716	36	
		B			1725	1801	36	
							144 Total	
2-14-73	Inlet	A	4	Fluoride	0912	0942	30	
		B			0942	1012	30	
		C			1016	1046	30	
		D			1058	1128	30	
		E			1130	1137	7	stopped for outlet
		E			1147	1210	23	to catch up
							150 Total	
2-14-73	Outlet	A	4	Fluoride	0910	0946	36	
		A			1000	1036	36	
		B			1056	1132	36	
		B			1140	1216	36	
							144 Total	
2-14-73	Inlet	E	5	Fluoride	1343	1413	30	
		D			1416	1446	30	
		C			1447	1517	30	
		B			1532	1602	30	
		A			1606	1636	30	
							150 Total	
2-14-73	Outlet	A	5	Fluoride	1330	1406	36	
		A			1418	1454	36	
		B			1509	1545	36	
		B			1555	1601	6	
		B			1620	1650	30	
							144 Total	

Date	Location	Port	Run	Pollutant	Clock Time Began	Clock Time Ended	Elapsed Time	Comments
2-15-73	Inlet	A	6	Fluoride	0905	0935	30	
		B			0950	1020	30	
		C			1030	1100	30	
		D			1110	1140	30	
		B			1155	1225	30	
							150	Total
2-15-73	Outlet	A	6	Fluoride	0850	0926	36	
		A			0935	1011	36	
		B			1025	1101	36	
		B			1111	1147	36	
							144	Total

SAMPLE HANDLING LOG

Task or Contract Number 3082-L

Source Identification IMC Rock Drying Inlet

Test Run Number Part #1

Pollutant(s) in Sample Particulate

Task	Date	Time	Personnel	Remarks
Sampling				
Probe Technician	2-12-73	1441-1646	Parnell	
Meter Technician		1441-1646	Gerstle	
Other			--	
Transport of Train to Cleanup Site		1650	Parnell & Kulujian	
Train Disassembly		1655	Kulujian & Geiger	
Train Cleanout		1715	Geiger	
Packing and Storage		1730	Geiger	
Shipment to Analysis Site	2-18-73		Parnell	
Lab Analysis				
Write Up			Kulujian	

SAMPLE HANDLING LOG

Task or Contract Number 3082-L

Source Identification IMC Rock Drying Inlet

Test Run Number Part #2

Pollutant(s) in Sample Particulate

Task	Date	Time	Personnel	Remarks
Sampling				
Probe Technician	2-13	0916-1335	Parnell	
Meter Technician		0916-1335	Gerstle	
Other	--	--	--	
Transport of Train to Cleanup Site		1345	Gerstle	
Train Disassembly		1430	Geiger & Parnell	
Train Cleanout		1440	Geiger	
Packing and Storage		1805	Geiger	
Shipment to Analysis Site	2-18-73		Parnell	
Lab Analysis				
Write Up			Kulujian	

SAMPLE HANDLING LOG

Task or Contract Number 3082-L

Source Identification IMC Rock Drying Inlet

Test Run Number Part #3

Pollutant(s) in Sample Particulate

Task	Date	Time	Personnel	Remarks
Sampling				
Probe Technician	2-13	1443-1508	Parnell	
Meter Technician		1443-1508	Gerstle	
Other	--	--	--	
Transport of Train to Cleanup Site		1510	Gerstle	
Train Disassembly		1630	Geiger & Parnell	
Train Cleanout		1720	Geiger	
Packing and Storage		1805	Geiger	
Shipment to Analysis Site	2-18-73		Parnell	
Lab Analysis				
Write Up			Kulujian	

SAMPLE HANDLING LOG

Task or Contract Number 3082-L

Source Identification IMC Kingsford

Test Run Number Fluor #4

Pollutant(s) in Sample Fluorides

Task	Date	Time	Personnel	Remarks
Sampling	2-14-73			
Probe Technician		0912-1210	Parnell	
Meter Technician		0912-1210	Gerstle	
Other			--	
Transport of Train to Cleanup Site		1215	Gerstle	
Train Disassembly		1330	Gerstle & Parnell	
Train Cleanout		1400	Geiger	
Packing and Storage		1750	Geiger	
Shipment to Analysis Site	2-18-73		Parnell	
Lab Analysis				
Write Up			Kulujian	

SAMPLE HANDLING LOG

Task or Contract Number 3082-L

Source Identification IMC Kingsford

Test Run Number Fluor #5

Pollutant(s) in Sample Fluorides

Task	Date	Time	Personnel	Remarks
Sampling	2-14-73			
Probe Technician		1343-1636	Parnell	
Meter Technician		1343-1635	Gerstle	
Other			--	
Transport of Train to Cleanup Site		1640	Gerstle	
Train Disassembly		1650	Gerstle & Parnell	
Train Cleanout		1700	Geiger	
Packing and Storage		1750	Geiger	
Shipment to Analysis Site	2-18-73		Parnell	
Lab Analysis				
Write Up			Kulujian	

SAMPLE HANDLING LOG

Task or Contract Number 3082-L

Source Identification IMC Rock Drying Inlet

Test Run Number Fluor #6

Pollutant(s) in Sample Fluorides

Task	Date	Time	Personnel	Remarks
Sampling	2-15-73			
Probe Technician		905 - 1225	Parnell	
Meter Technician		905 - 1225	Kulujian	
Other				
Transport of Train to Cleanup Site		1230	Kulujian	
Train Disassembly		1240	Parnell	
Train Cleanout		1245	Parnell	
Packing and Storage		1300	Geiger	
Shipment to Analysis Site	2-18-73		Parnell	
Lab Analysis				
Write Up			Kulujian	

SAMPLE HANDLING LOG

Task or Contract Number: 3082-L

Source Identification: IMC Rock Drying Outlet

Test Run Number: Part #1

Pollutant(s) in Sample: Particulates

Task	Date	Time	Personnel	Remarks
Sampling				
Probe Technician	2-13-73	1435-1746	Meer	
Meter Technician		1435-1745	O'Connor	
Other				
Transport of Train to Cleanup Site	2-13-73	1755	Meer-O'Connor	
Train Disassembly	2-13-73	1800	Kulujian	
Train Cleanout	2-13-73	1830	Kulujian-Parnell	
Packing and Storage	2-13-73	1830	Geiger	
Shipment to Analysis Site	2-18-73		Parnell	
Lab Analysis				
Write Up			Kulujian	

SAMPLE HANDLING LOG

Task or Contract Number: 3082-L

Source Identification: IMC Rock Drying Outlet

Test Run Number: Part #2

Pollutant(s) in Sample: Particulates

Task	Date	Time	Personnel	Remarks
Sampling				
Probe Technician	2-13-73	915-1411	Meer	
Meter Technician	2-13-73	915-1411	O'Connor	
Other				
Transport of Train to Cleanup Site	2-13-73	1430	Meer-O'Connor	
Train Disassembly	2-13-73	1510	Kulujian-Geiger	
Train Cleanout	2-13-73	1530	Geiger	
Packing and Storage	2-13-73	1690	Geiger to Riley	
Shipment to Analysis Site	2-18-73		Parnell	
Lab Analysis				
Write Up			Kulujian	

SAMPLE HANDLING LOG

Task or Contract Number 3082-L

Source Identification IMC Rock Drying Outlet

Test Run Number Part #3

Pollutant(s) in Sample Particulate

Task	Date	Time	Personnel	Remarks
Sampling				
Probe Technician	2-13-73	1440-1801	Meer	
Meter Technician	2-13-73	1440-1801	O'Connor	
Other				
Transport of Train to Cleanup Site	2-13-73	1830	Meer-O'Connor	
Train Disassembly	2-13-73	1845	Kulujian	
Train Cleanout	2-13-73	1910	Kulujian-Geiger	
Packing and Storage	2-13-73	1930	Geiger to Riley	
Shipment to Analysis Site	2-18-73		Parnell	
Lab Analysis				
Write Up			Kulujian	

SAMPLE HANDLING LOG

Task or Contract Number 3082-L

Source Identification IMC Rock Drying Plant (Outlet)

Test Run Number Fluoride #4

Pollutant(s) in Sample Fluorides

Task	Date	Time	Personnel	Remarks
Sampling				
Probe Technician	2-14-73	910-1216	Meer	
Meter Technician	2-14-73	910-1216	O'Connor	
Other				
Transport of Train to Cleanup Site	2-14-73	1220	Kulujian-Meer	
Train Disassembly		1230	Meer	
Train Cleanout		1255	Geiger	
Packing and Storage		1820	Geiger to Riley	
Shipment to Analysis Site	2-18-73		Parnell	
Lab Analysis				
Write Up			Kulujian	

SAMPLE HANDLING LOG

Task or Contract Number 3082-L

Source Identification IMC Rock Drying Plant (Outlet)

Test Run Number Fluoride #5,

Pollutant(s) in Sample Fluorides

Task	Date	Time	Personnel	Remarks
Sampling				
Probe Technician	2-14-73	1330-1650	Meer	
Meter Technician	2-14-73	1330-1650	O'Connor	
Other				
Transport of Train to Cleanup Site	2-14-73	1705	Kulujian-Meer	
Train Disassembly		1710	Meer	
Train Cleanout		1725	Geiger	
Packing and Storage		1820	Geiger to Riley	
Shipment to Analysis Site	2-18-73		Parnell	
Lab Analysis				
Write Up			Kulujian	

SAMPLE HANDLING LOG

Task or Contract Number 3082-L

Source Identification IMC Rock Drying Outlet

Test Run Number Fluoride #6

Pollutant(s) in Sample Fluorides

Task	Date	Time	Personnel	Remarks
Sampling	2-15-73	850-1147	Meer	
Probe Technician		850-1147	O'Connor	
Meter Technician				
Other				
Transport of Train to Cleanup Site		1150	O'Connor-Meer	
Train Disassembly		1200	Meer-Geiger	
Train Cleanout		1235	Geiger	
Packing and Storage		1255	Geiger	
Shipment to Analysis Site	2-18-73		Parnell	
Lab Analysis				
Write Up			Kulujian	

Appendix J. Project Participants and Titles

Personnel who were involved with the emission testing at the IMC Rock Drying site in Kingsford, Florida, are listed below.

Participant	Affiliation	Title
C. Riley	EPA	Contract Officer
J. Peoples	EPA	Process Engineer
R. Hearon	IMC	Chemical Engineer
B. Harwood	IMC	Plant Engineer
R. Gerstle	PEDCo	Engineering Supervisor
N. Kulujian	PEDCo	Field Supervisor
A. O'Connor	PEDCo	Senior Technician
E. Meer	PEDCo	Technician
G. Parnell	PEDCo	Technician
J. Geiger	PEDCo	Lab Analyst

APPENDIX K

PRESURVEY REPORT

PEDCo-ENVIRONMENTAL
SUITE 8 · ATKINSON SQUARE
CINCINNATI, OHIO 45246
513/771-4330

PRE-SURVEY REPORT AND ESTIMATE OF MAN-HOURS REQUIRED TO PERFORM SPECIFIED TESTS AT IMC CORPORATION AT KINGSFORD, FLORIDA AND NORALYN, FLORIDA

Submitted to: C. E. Riley
Office of Air Programs
Emission Testing Branch, ATD
Environmental Protection Agency
Research Triangle Park,
North Carolina 27711

Contract No. 68-02-0237, Task #12

By: Norman J. Kulujian

January 29, 1973

1.0 INTRODUCTION

Pre-surveys of the IMC Corporation phosphorus rock drying operation at Kingsford, Florida, and phosphorus rock grinding operation at Noralyn, Florida, were conducted on January 15, 16, and 17, 1973. The pre-survey was conducted in order to obtain: 1) the level of effort, 2) knowledge of the specific equipment needed, and 3) plant additions and alterations required to conduct specific emission tests at the two plants. In addition to the "level of effort" required, a brief description of the proposed testing procedure is presented.

2.0 SOURCE INFORMATION

2.1 Location

The two IMC plants mine pebble phosphate rock and refine it for use in a wide variety of products for agriculture and industry. The two sites, located in Polk County, Florida, are approximately fifteen miles apart and twenty minutes away from the motel at which the stack sampling crew will reside.

2.2 Process Description

The process will be described in the final report. A general flow diagram is shown in Figure 1. The grinding operation at the Noralyn plant is under roof and is equipped with a baghouse. Particulate matter caught by the fabric

Figure 1.

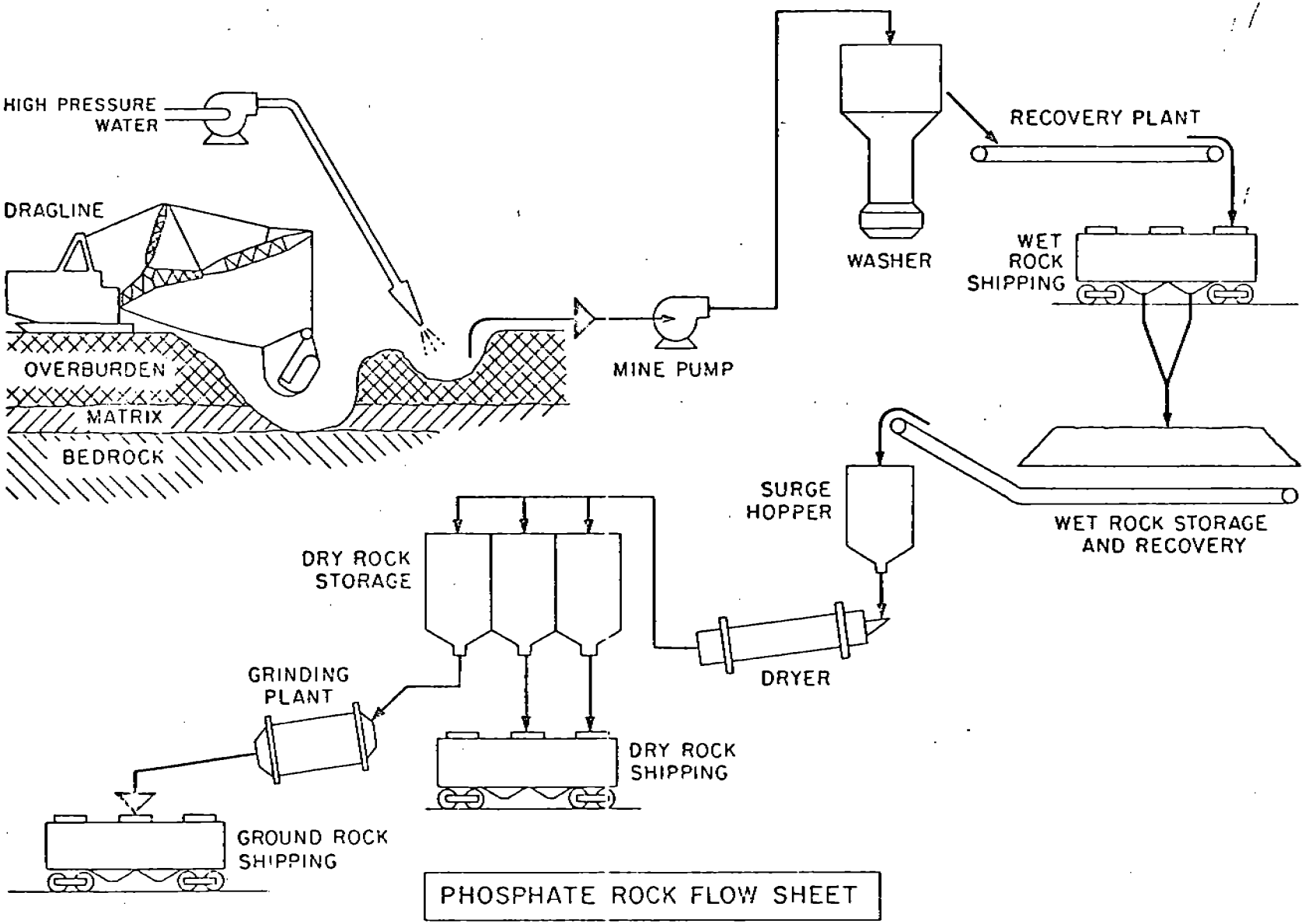
HIGH PRESSURE WATER
DRAGLINE
OVERBURDEN
MATRIX
BEDROCK
MINE PUMP
WASHER
RECOVERY PLANT
WET ROCK SHIPPING
WET ROCK STORAGE AND RECOVERY
SURGE HOPPER
DRYER
DRY ROCK STORAGE
GRINDING PLANT
DRY ROCK SHIPPING
GROUND ROCK SHIPPING
PHOSPHATE ROCK FLOW SHEET

filters is not periodically emptied; they are recirculated through the rock grinding process.

The rock drying site is located outdoors. Access to the inlet of the rock drier will be difficult, due to the configuration and the short distance between the fans and scrubber water sprays.

2.2.1 Operations To Be Sampled

Rock Grinding - Noralyn

Three tests will be conducted to determine particulate concentrations at the inlet and outlet of the process. Sampling locations are defined in Figures 2 and 3.

Preliminary runs similar to method 4 of the Federal Register will be performed to determine the moisture content in the stack gases. Samples of the raw and final products will be taken as the tests are being performed.

Rock Drying - Kingsford

Three fluoride and three particulate tests will be made upstream and downstream of the scrubber. The inlet duct is a rectangular, horizontal duct and the outlet is a vertical circular orifice. Figures 4 and 5 illustrate the sampling location. A moisture run is needed prior to testing on the inlet to determine moisture concentration. The outlet will be assumed to be saturated. Quantities of raw and

Figure 2. Rock Grinding Inlet

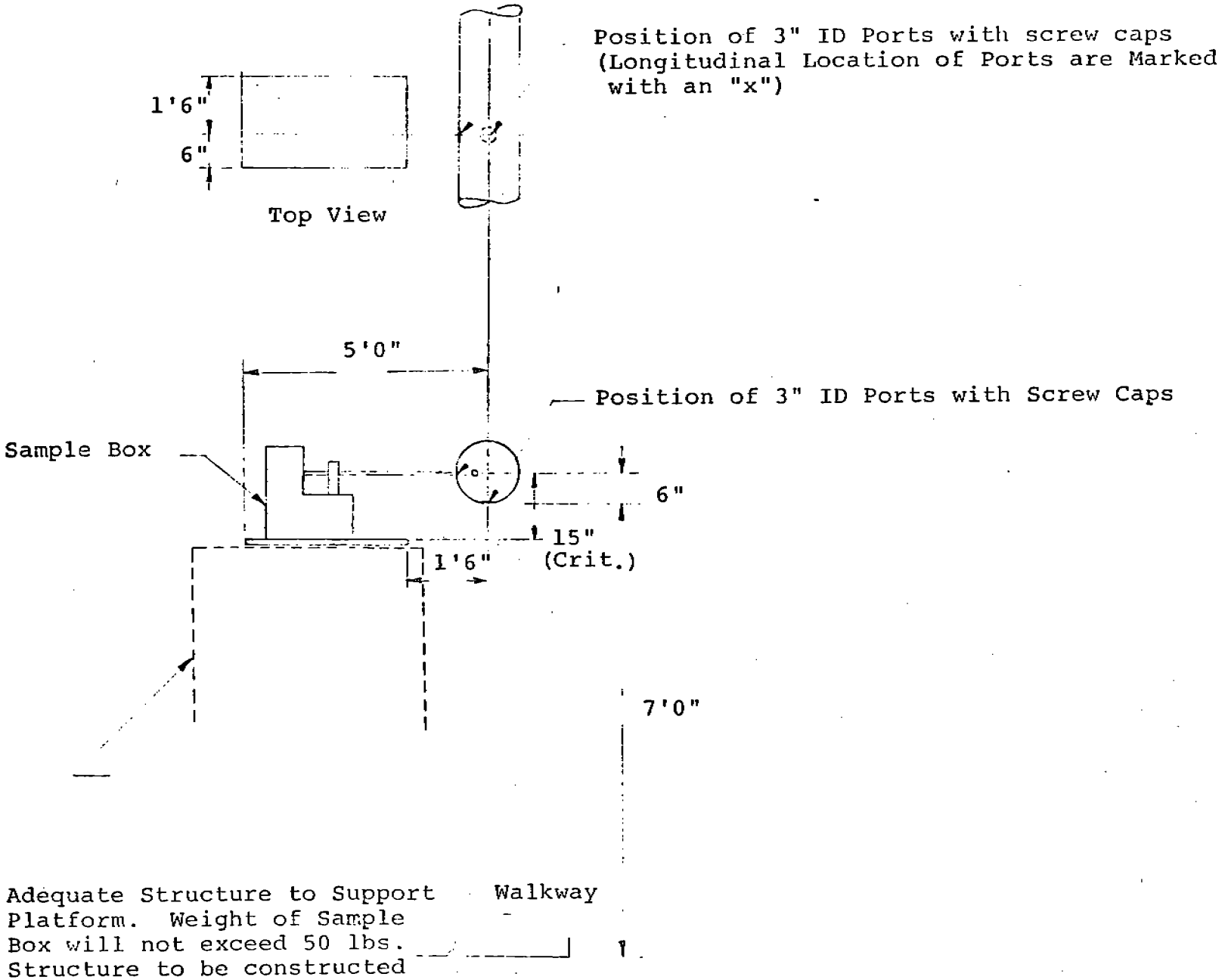

View looking downstream at fabric filters.

Figure 3. Rock Grinding Outlet

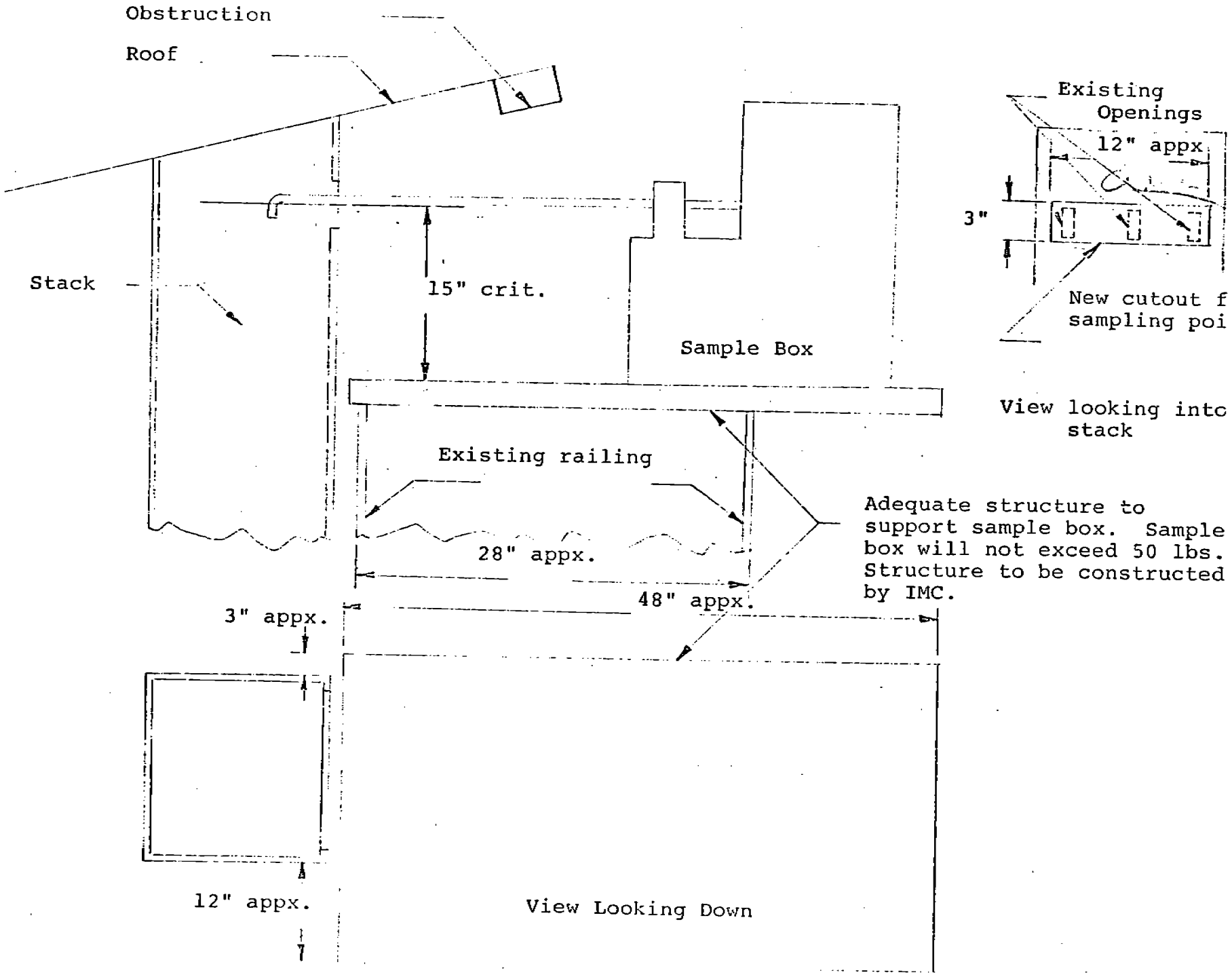

Figure 4. Rock Drying Inlet

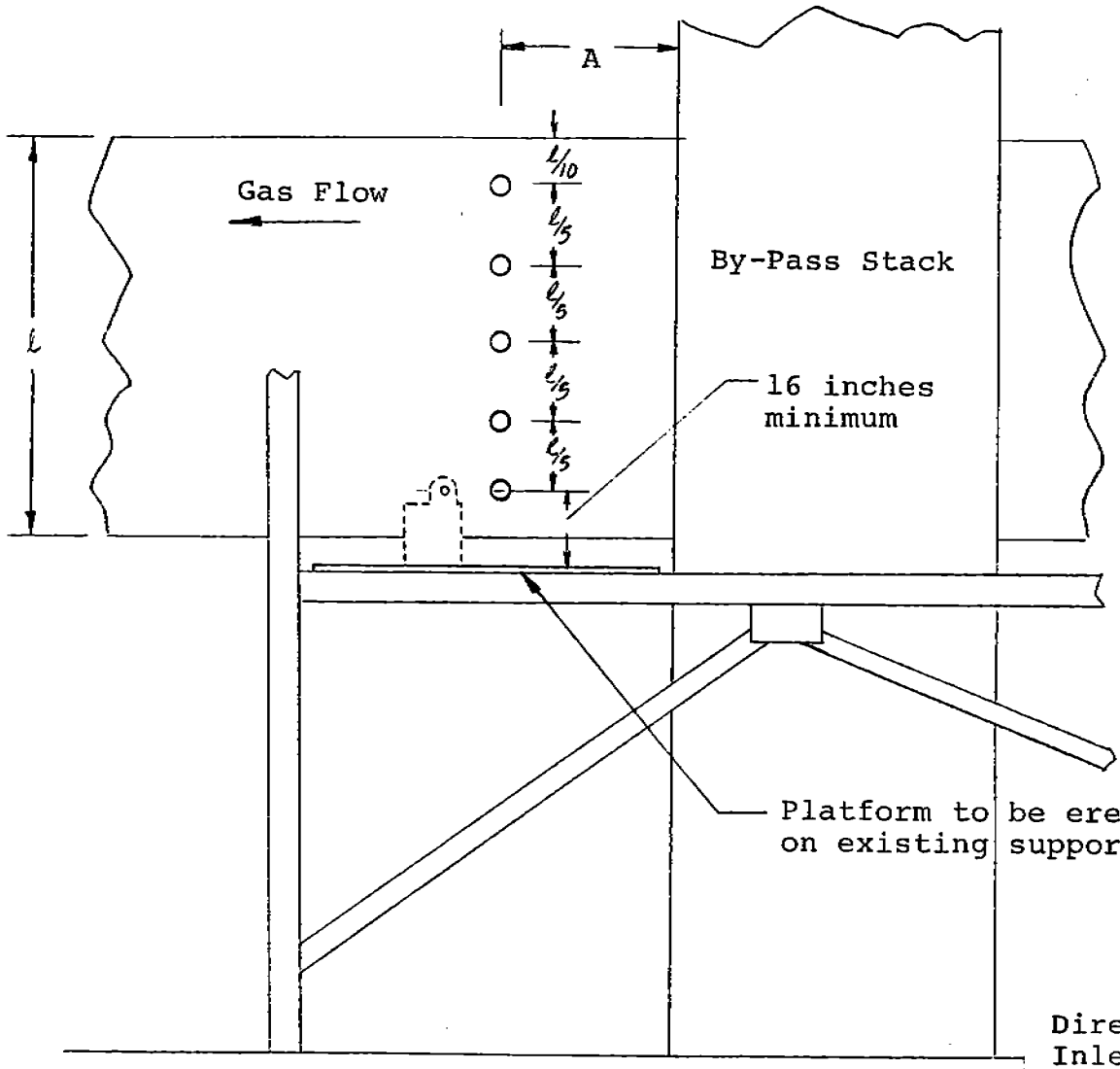

Directions for Locating Ports for Inlet Sampling

1. Pick a length A that can be easily sampled from a scaffolding placed between the by pass and existing stacks.
2. Measure the height of the duct 1.
3. Place six 3" ID ports with screw c in vertical line with the spacings shown. Ports will be on the side o the by-pass stack.

Figure 5. Rock Drying Outlet

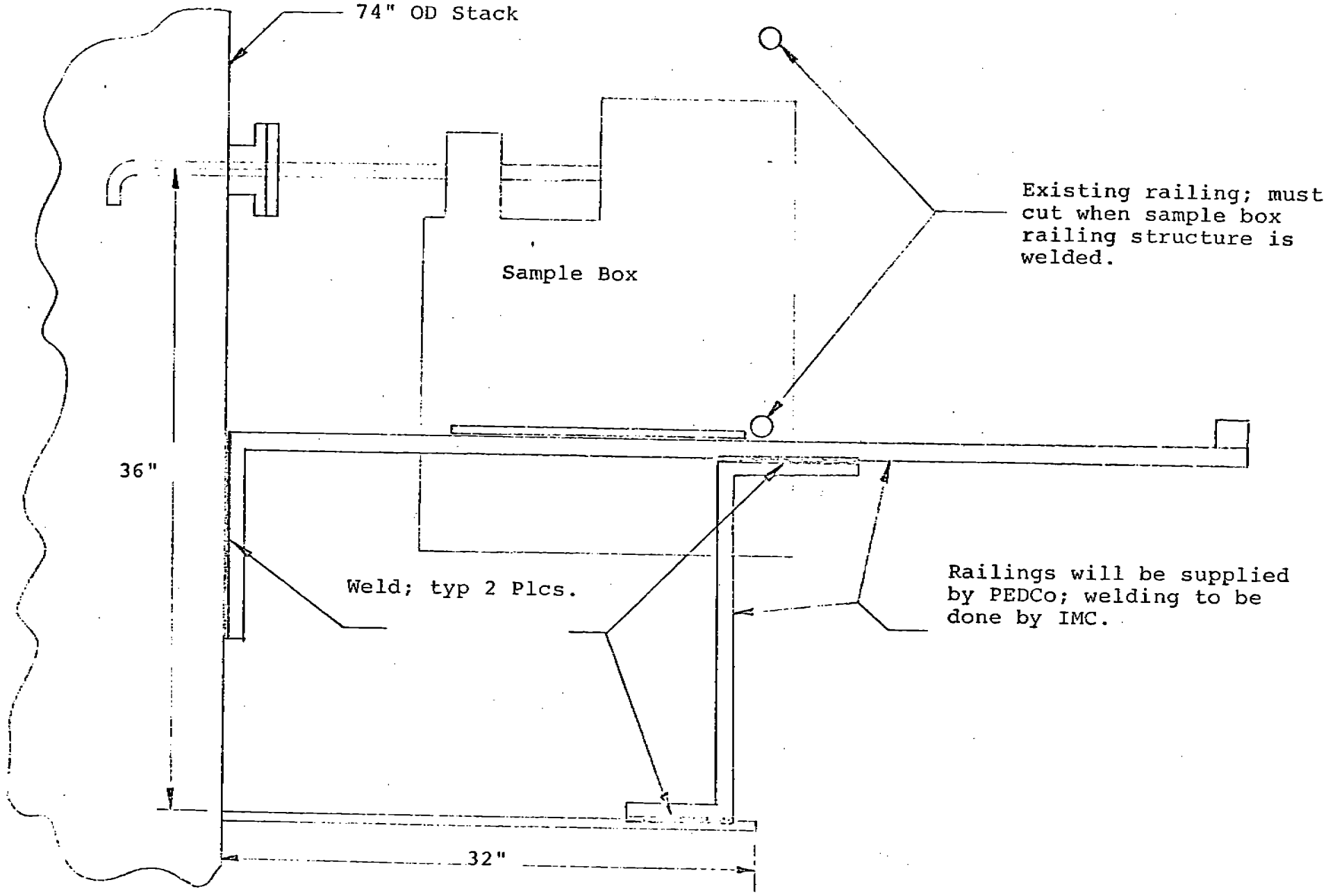

Picture typical at both ports

finished material as well as scrubber water samples will be taken when sampling. An opening will be provided to gain access to scrubber water.

3.0 EMISSION TESTING PROGRAM

Specific information on testing is shown in Table 1. Both a long and a short probe will be used per test on the drier outlet due to the size and height of the sampling locations.

4.0 SAMPLING SCHEDULE AND MANPOWER REQUIREMENTS

Sampling of the grinding and drying operations at IMC are scheduled for the week of February 12, 1973. The sampling program is tentatively a one week operation.

Table 2 presents an estimate of the hours required for conducting this work by category and by task with a six (6) man field team. The 6 man team is justified due to the unavailability of a clean up area close to the sampling site. One man is needed for the transportation of items between the testing site and the laboratory facilities set up in the motel area. The estimate of man hours is based on continual operation of the process and good weather. Particulate and fluoride analysis will not be performed by PEDCo.

The sampling schedule is shown in Table 3. Any complications or unforeseen delays will result in the test crew remaining in Florida until the task is completed.

Table 1. SAMPLING PORT DATA

Sampling Point	Dimensions	No. of Points	Points Per Port	Total Points	Sample Time Per Ports (minutes)	Total Time (minutes)
Grind Inlet	12" Round	2	14	28	3	84
Grind Outlet	12" x 14"	4	6	24	5	120
Dry Inlet	56" x 82"	5	10	50	2	100
Dry Outlet	74" Round	2	24	48	2.5	120

Table 2. MANPOWER REQUIREMENTS FOR IMC CORPORATION

Task	Manhours by Category				
	Senior	Intermediate	Technician	Clerical	Total
1. Equipment Preparation and Cleanup					
Mechanical			64		64
Chemical			16		16
2. Travel					
Truck[a]			40		40
Air			24		24
3. Field Set Up and Testing[b]		189	189		378
4. Calculations and Report Preparation	10	16	30	8	64
5. Planning and Administration	10			4	14
TOTALS	20	205	363	12	600

a) Includes trip to Raleigh, North Carolina to deliver samples.

b) Includes 3 intermediate and 3 technician personnel.

Table 3. SAMPLING SCHEDULE FOR IMC CORPORATION

DATE	ACTIVITY
Feb. 7	Technician starts to Florida with sampling apparatus.
Feb. 8	Technician arrives in Florida.
Feb. 9	Technician visits IMC sampling sites, notes if pre-test work is acceptable, and gives IMC testing rig (needed for drier outlet) to weld to existing catwalk.
Feb. 11	Crew arrives in Florida.
Feb. 12	Equipment is set up at rock drying site. Moisture train is run at inlet.
Feb. 13	Particulate runs 1 and 2 are completed.
Feb. 14	Particulate run 3 and fluoride run 1 are completed.
Feb. 15	Fluoride runs 2 and 3 are completed.
Feb. 16	Equipment is set up at rock grinding site. Moisture train is run. Particulate tests 1 and 2 are completed.
Feb. 17	Particulate tests 2 and 3 are completed. Equipment is packed up and crew leaves Florida.
Feb. 18	Technician starts to North Carolina with samples.
Feb. 19	Technician arrives at North Carolina and delivers samples.
Feb. 21	Technician arrives in Cincinnati.

5.0 SPECIAL REQUIREMENTS

Sampling site modifications are required as shown in Figures 2 through 5. PEDCo will send a technician to the test site prior to the arrival of the crew to ensure that scaffolding, boarding, sampling ports, and catwalk modifications have been properly added or reworked.

DRAFT/WP
d3006-4/971130
03/30/92 1

Ref. 1

Emission Test Report
Review Checklist

Reviewer: Michelle Ramsey
Review Date: 27 April 1992

A. Background Information

1. Facility name: International Minerals And Chemical Corp.

   Location: Kingsford, Florida

2. Source category: Phosphate Rock

3. Test date: February 12-15, 1973

4. Test sponsor: US EPA

5. Testing contractor: PEDCo - Environmental

6. Purpose of test: establish guide for NSPS as authorized by CAA of 1970

7. Pollutants measured (measured with Orsat apparatus)

   (PM) PM-10 (CO) SO_2 NO_x VOC Pb (CO_2)

   Others (list): fluorides

8. Process overview: On an attached page provide a block diagram of the unit operations and associated air pollution control systems at the facility. Identify process tested with letters from the beginning of the alphabet (A, B, C, etc.) and APC systems with letters from end of alphabet (V, W, X, etc.). Also identify test locations with Arabic numerals (1,2,3, ...). Using the ID symbols from that sketch complete the table below that identifies processes or unit operations tested.

Test ID	Process	Process ID	Emissions tested		APCD (controlled emissions only)
			Uncontrolled	Controlled	
1,2	Drying (fuel oil / ~~nat. gas~~)	A	✓	✓	scrubber

B. Process Information

1. Provide a brief narrative description of the process. With as much detail as possible, (e.g., if a furnace or conveyor system is used, identify the type of unit) describe the equipment used for those operations tested. (Note: If process description provided in test report is adequate, attach copy or reproduce here.)

Attachments:

Process Descriptions (2)

Phosphate Rock Flow Sheet

PROCESS DESCRIPTION

Wet phosphate rock enters the IMC dryer where the particles are dried by hot furnace gases. Dust entrainment in the exit flue gases are scrubbed in a vertical spray chamber scrubber. Fluoride emissions in the phosphate rock are driven off to the exit gases by the heat in the dryer.

IV. PROCESS DESCRIPTION

A phosphate rock plant flow diagram, shown in Figure 4.1, illustrates the steps of the process in relation to the drying operation. After the phosphate rock is mined, a flotation process separates the impurities by chemically separating the impurities from the phosphate sand. The washed rock is then conveyed to storage bins.

The wet rock contains between 7 and 20 percent moisture while being transported to the drying site. All grades of rock are normally dried to 3 percent or less in the drying operation.

The IMC rock dryer at Kingsford, Florida is a 270 TPH fluid bed unit. The rock is dried by heat supplied by natural gas, with No. 5 residual fuel oil as a standby.

From the drier, combustion gases enter a cyclone separator where the majority of the particulate is removed and recycled back to the product conveyor belt. The gases then flow to a cyclonic scrubber using fresh water as the scrubbing media. The clean gas flow leaves the scrubber and exits through a ninety foot stack.

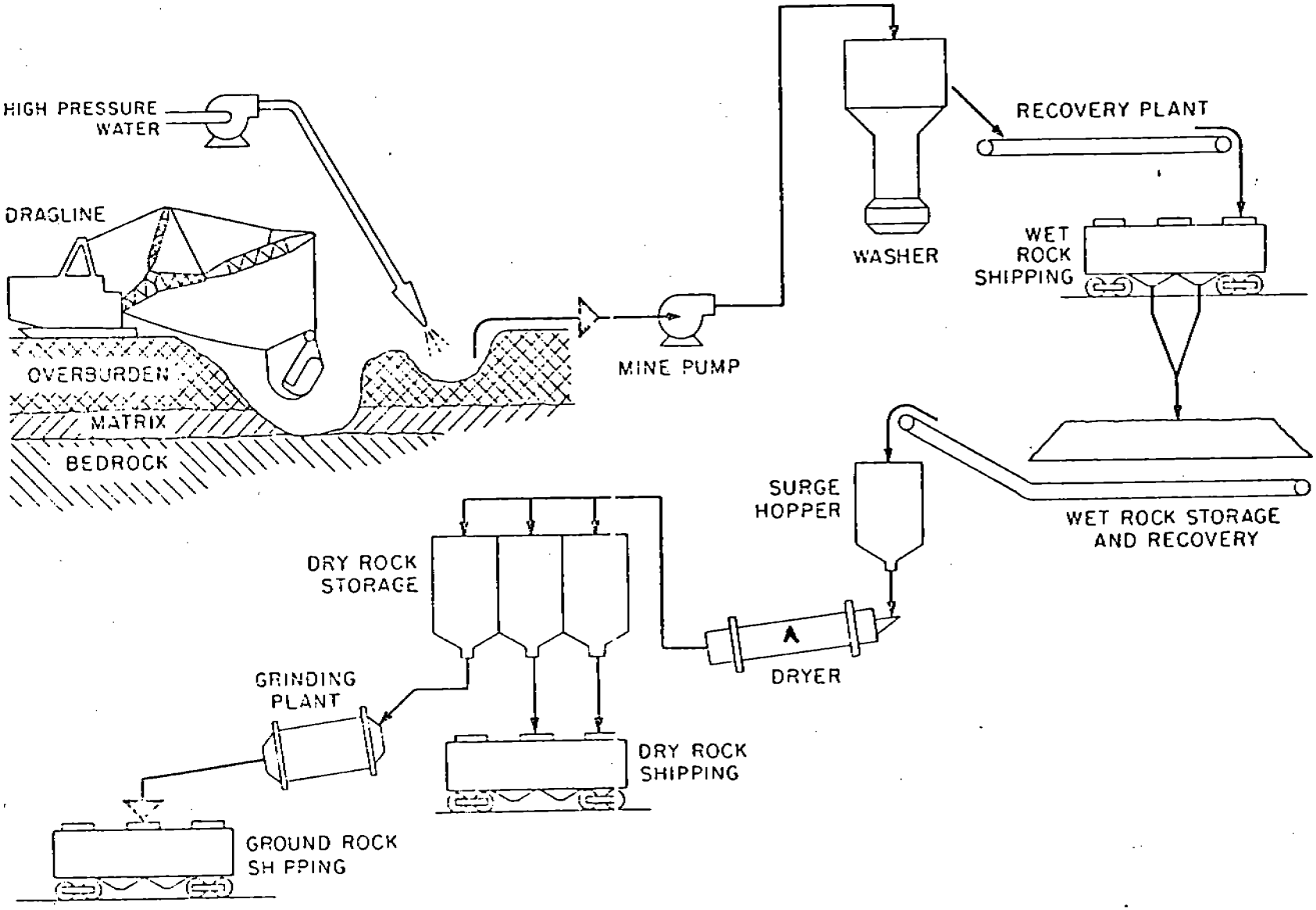

Figure 4.1. Phosphate rock flow sheet.

2. For each process tested list feedstock materials and products. Indicate if activity factors are for feed (F) rate or product (P) rate.

Process ID	Feedstock materials	Products	Basis for activity factor	F/P
A	60% pebble - 40% concentrate	phosphate rock	feed	F
A	70% pebble - 30% concentrate	"	"	"
A	100% concentrate	"	"	"
A	60% pebble - 40% concentrate	"	"	"
A	60% pebble - 40% concentrate	"	"	"
A	100% concentrate	"	"	"

Basis for data: Page 12 + 13
(Indicate page/table Nos. in test report)

3. For each process or operation tested and each test run note process capacity and operating rate during test.

Process ID	Capacity	Units	Test run	Process rate	Units
A	270	ton/hr	1	270	tons/hr
			2	350	"
			3	380	"
			4	270	"
			#5	300	"
			#6	315	"
			3		
			4		
			1		
			2		
			3		
			4		
			1		
			2		
			3		
			4		

Basis for data: Appendix A, A-1 → A-16

C. Air Pollution Control Systems Tested

1. For each air pollution control system pollution control system identified in A.8, note the following

ID	Type of APCD	Manufacturer	Model No.
2	dryer scrubber		

Note: Be as specific as possible in identifying APCD. For example, indicate "pulse jet fabric filter" rather than simply "fabric filter."

2. For each system identified above, provide a narrative description. For fugitive systems describe capture techniques as well as the removal techniques (use a separate page if necessary)

3. Using the attached parameter list for guidance complete the table below. (Use additional pages as needed.)

APCD ID	Parameter	Units	Readings			
			Run 1	Run 2	Run 3	Run 4
Z						
Type of APCD: scrubber						
Type of APCD:						
Type of APCD:						

D. Sampling and Analysis Methods

1. Complete the following table

Test location	Pollutant	S & A method	Reference/ conditional method	Deviations noted
	PM	EPA Method 5	(Y)/N	(Y)/N
Prior to the scrubber of the rock dryer	fluorides	EPA Method 13 (Draft)	(Y)/N	Y/N
			Y/N	Y/N
			Y/N	Y/N
			Y/N	Y/N
			Y/N	Y/N
After the scrubber of the rock dryer	PM	EPA Method 5	(Y)/N	(Y)/N
	fluorides	EPA Method 13 (Draft)	(Y)/N	Y/N
			Y/N	Y/N
			Y/N	Y/N
			Y/N	Y/N
			Y/N	Y/N
			Y/N	Y/N
			Y/N	Y/N
			Y/N	Y/N
			Y/N	Y/N
			Y/N	Y/N
			Y/N	Y/N
			Y/N	Y/N
			Y/N	Y/N
			Y/N	Y/N
			Y/N	Y/N
			Y/N	Y/N
			Y/N	Y/N

2. If a method used was not a reference or conditional method, provide a narrative discussion including any data manipulation needed to make results correspond to reference or conditional method results.

3. Describe any deviations ~~identified above.~~

Sampling time should be 5 min. for each sampling point although shorter times were used due to the number of traverse points selected.

see attached (A)

E. Emission Data Documentation

1. Tabulate the following stack gas data from the test report. (Use additional pages as needed.)

Test ID	Parameter	Units	Values reported			
			Run 1	Run 2	Run 3	~~Run 4~~
1	Stack temperature	°F	164	164	164	
	Moisture	%	31.06	32.43	31.41	
	Oxygen	%	17.93	17.50	15.70	
	Volumetric flow, actual	acfm	106,284	110,850	113,652	
	Volumetric flow, standard	dscfm	64,172	65,578	67,040	
	Percent isokinetic	%	107.5	109.3	105.9	
	Pollutant concentration:					
	PM*	gr/acf	0.0313	0.022	0.016	
	CO_2	%	2.93	3.20	5.00	
	CO	%	0	0.03	0.07	
	PM, front	gr/acf	0.6840	1.231	1.020	
	PM, total	gr/acf	0.7153	1.253	1.036	
2	Stack temperature	°F	151	150	152	
	Moisture	%	26.94	27.15	27.48	
	Oxygen	%	15.43	15.13	15.57	
	Volumetric flow, actual	acfm	100,604	103,573	100,508	
	Volumetric flow, standard	dscfm	64,707	66,569	63,843	
	Percent isokinetic	%	108.9	100.6	105.5	
	Pollutant concentration:					
	PM*	gr/dscfm	0.0088	0.01373	0.00743	
	CO_2	%	5.00	4.03	5.49	
	CO	%	0.03	0	0.03	
	PM, front	gr/acf	0.03892	0.02138	0.02193	
	PM, total	gr/acf	0.04772	0.03511	0.02936	
			Run 4	Run 5	Run 6	—
1	Stack temperature	°F	164	164	164	
	Moisture	%	33.19	32.27	30.22	
	Oxygen					
	Volumetric flow, actual	acfm	111,213	111,127	106,321	
	Volumetric flow, standard	dscfm	64,884	65,641	64,528	
	Percent isokinetic	%	108.9	105.9	108.5	
	Pollutant concentration:					
	fluorides**	gr/acf	0.01819	0.025 68	0.02411	
	fluoride, H_2O soluble	gr/acf	0.00042	0.00079	0.00037	
	fluoride, total	gr/acf	0.018161	0.02647	0.02448	

$$(\%\ CO_2)\left(\frac{\text{Volumetric flow rate}}{0.1170\ lb/ft^3}\right) = CO_2\ lb/ft^3$$

* $PM_{total} - PM_{front} = PM$

** $fluorides_{total} - fluorides_{H_2O\ soluble} = fluorides$

E. Emission Data Documentation

1. Tabulate the following stack gas data from the test report. (Use additional pages as needed.)

Test ID	Parameter	Units	Values reported			
			Run 1 4	Run 2 5	Run 3 6	~~Run 4~~
2	Stack temperature	°F	151	150	151	
	Moisture	%	25.45	24.92	27.64	
	Oxygen					
	Volumetric flow, actual	acfm	101,226	102,610	104,767	
	Volumetric flow, standard	dscfm	66,251	67,700	66,312	
	Percent isokinetic	%				
	Pollutant concentration:					
	fluorides * *	gr/acf	0.00022	0.00022	0.00043	
	fluoride, H_2O soluble	gr/acf	0.00053	0.00060	0.00019	
	fluoride, total	gr/acf	0.00075	0.00648	0.00063	
	Stack temperature					
	Moisture					
	Oxygen					
	Volumetric flow, actual					
	Volumetric flow, standard					
	Percent isokinetic					
	Pollutant concentration:					
	Stack temperature					
	Moisture					
	Oxygen					
	Volumetric flow, actual					
	Volumetric flow, standard					
	Percent isokinetic					
	Pollutant concentration:					

(A)

Run 1 - Inlet and outlet tests completed without problems. The outlet sample box was taken back to the motel after the test and modified to make easier access into sampling ports.

Run 2 - Approximately midway through test the conveyor belt carrying finished rock product broke causing a down time of about 90 minutes. The belt was repaired and after process stabilization, the outlet meter box flow was irregular. Outlet testing was stopped to replace the meter box.

Run 3 - No problems arose with the process or testing of the dryer. The motor was replaced in the outlet sample box used for Run 2.

Run 4 - The first impinger on the inlet train was replaced after it was completely full. The inlet train was shut off for 15 minutes to let the outlet sampling "catch up" and ultimately result in both trains to finish at approximately the same time.

Run 5 - Testing was performed without complications.

Run 6 - The probe nozzle contacted the mud surrounding the duct walls upon traversing the final port. A 30 inch vacuum was created consequently backing up impinger water and wetting the filter. Testing resumed after replacing the filter.

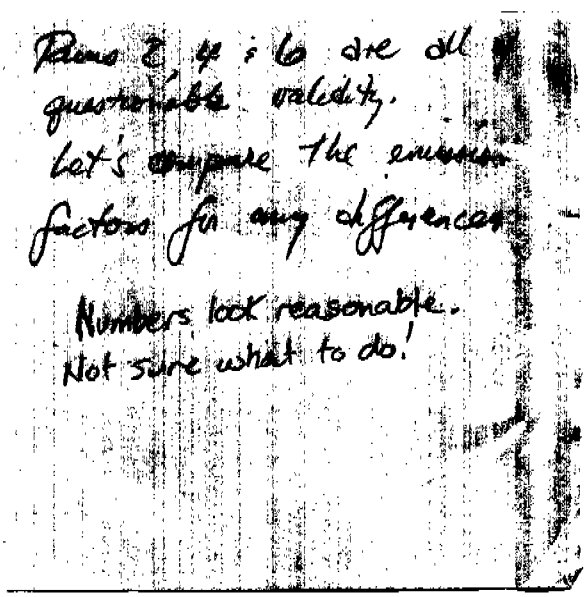

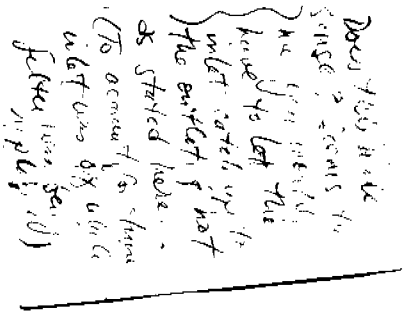

missing total mass flux rates! NO! on p. 7

2. Tabulate pollutant mass flux rates

Test ID	Pollutant	Units	Mass flux rates			
			Run 1	Run 2	Run 3	Run 4
1	PM*	lb/hr	28.5	21	15.6	
	fluorides**	lb/hr	17.35	24.462	21.963	
	fluoride, H_2O soluble	lb/hr	0.400	0.758	0.337	
	PM, front	lb/hr	623.2	1170	978.2	
	PM, total	lb/hr	651.7	1191	993.8	
	CO_2	lb/hr	13199.28	14,731	23,531	
	CO	lb/hr	—	88.766	211.74	
	fluoride, total	lb/hr	17.75	25.22	22.30	
2	PM*	lb/hr	7.58	12.14	6.4	
	fluorides**	lb/hr	0.191	5.166	0.383	
	fluoride, H_2O soluble	lb/hr	0.464	0.532	0.179	
	PM, front	lb/hr	33.53	18.98	18.90	
	PM, total	lb/hr	41.11	31.12	25.30	
	CO_2	lb/hr	22772.16	18832.77	24,515.33	
	CO	lb/hr	87.59	—	86.42	
	fluoride, total	lb/hr	0.655	5.698	0.562	

All fluoride measurements were taken for Runs 4,5 and 6 and not Runs 1,2 and 3.

(% CO_2)(Vol. flow rate in DSCFM)(CO_2 density in lbs/ft3) = CO_2 lb/min

$$\frac{(\text{conc.})(V_{\mu_{std}})(60)}{\text{net time}} = \text{mass flux } CO_2$$

3. Present example emission factor calculations below.

$$P_{tb} - P_{tf} = EF$$

in: 0.106 + 0.058 + 0.041 = 0.205 → 0.0683 (PM)

out: 0.028 + 0.035 + 0.017 = 0.08 → 0.026 (PM)

in: 0.0639 + 0.0813 + 0.0739 + 0.2191 → 0.0730 (Fluorides)

out: 0.0007 + 0.0169 + 0.0012 = 0.0188 → 0.0063 (Fluorides)

4. Tabulate emission factors

Process	Pollutant	Units	Average emission factor	
			Uncontrolled	Controlled
A	PM*	lb/ton	0.0683	0.026
	fluorides**	lb/ton	0.0730	0.0063
	PM, front	lb/ton	2.7413	0.0756
	PM, total	lb/ton	2.80916667	0.1023
	CO_2	lb/ton	50.965	67.48
	CO	lb/ton	0.4055	0.2755
	fluoride, H_2O soluble	lb/ton	1.7×10^{-3}	1.366×10^{-3}
	fluoride, total	lb/ton	0.07323	7.63×10^{-3}

ATTACHMENT A
APCD PARAMETERS

Type of APCD	Parameters
Fabric filter	Cleaning mechanism Bag type Cleaning frequency Air to cloth ratio (A/C) Pressure drop Inlet temperature
ESP	Type (wet or dry) Number of fields Rapping cycle (if dry) Specific Collection Area (SCA) Particulate resistivity (if known) Spark rate Current and power levels
Venturi (or other high energy) scrubber	Pressure drop Liquid/gas (L/G) ratio Mist eliminator type
Packed-bed scrubber	Packing depth L/G ratio Caustic use (Y/N) pH Mist eliminator type
Carbon absorber	Bed depth Superficial gas velocity Bed temperature Desorption mechanism (media) Flue-gas moisture Cycle length Time-on-line after breakthrough

Emission Factors (lb/ton of feed)

A1	1	2	3
$PM_{filterable}$	2.307	3.343	2.574
PM_{total}	2.413	3.401	2.615
$PM_{condensable}$	0.106	0.058	0.041
Fluoride, H_2O soluble	0.0015	0.0025	0.0011
Fluoride, total	0.0654	0.0838	0.0705
CO_2	48.886	42.09	61.92
CO	—	0.254	0.557

A2			
$PM_{filterable}$	0.124	0.054	0.049
PM_{total}	0.152	0.089	0.066
$PM_{condensable}$	0.028	0.035	0.017
Fluoride, H_2O soluble	0.0017	0.0018	0.00006
Fluoride, total	0.0024	0.0187	0.0018
CO_2	84.12	53.81	64.51
CO	0.324	—	0.227

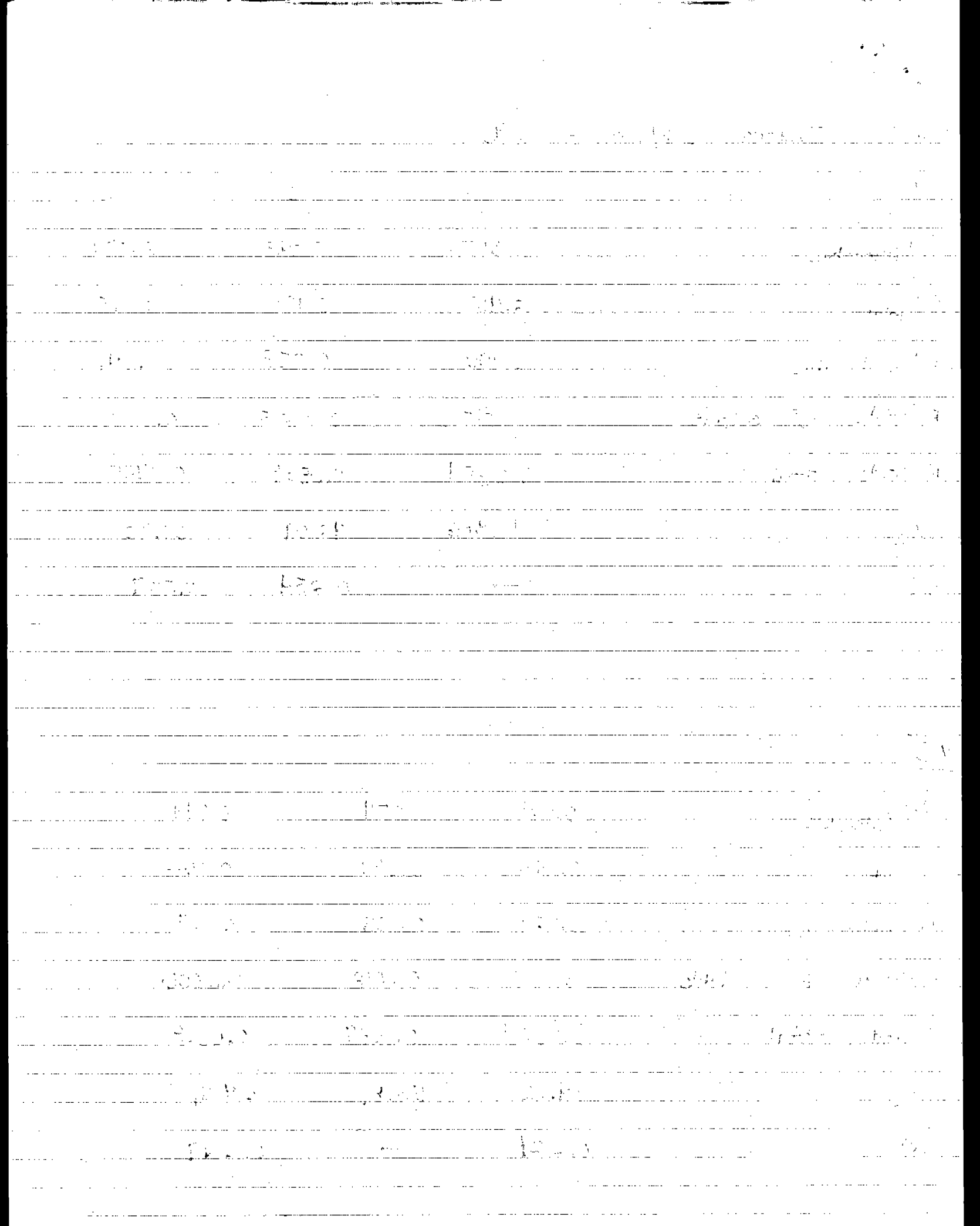
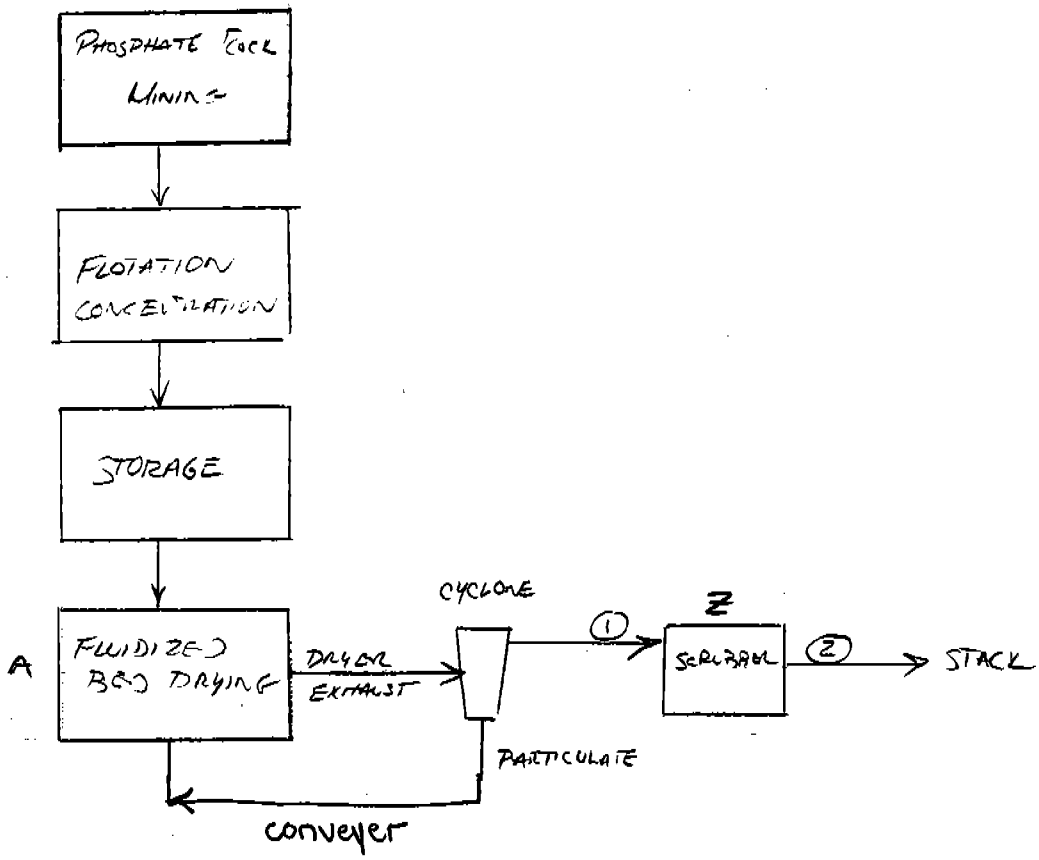
International Minerals And Chemical Corp.
Kingsford, FL