Note: This is a reference cited in *AP 42, Compilation of Air Pollutant Emission Factors, Volume I Stationary Point and Area Sources.* AP42 is located on the EPA web site at www.epa.gov/ttn/chief/ap42/

The file name refers to the reference number, the AP42 chapter and section. The file name "ref02_c01s02.pdf" would mean the reference is from AP42 chapter 1 section 2. The reference may be from a previous version of the section and no longer cited. The primary source should always be checked.

AP42 Section:	11.19.1
Reference:	1
Title:	Air Pollution Control Techniques For Nonmetallic Minerals Industry, EPA-450/3-82-014, U. S. Environmental Protection Agency, Research Triangle Park, NC, August 1982.

United States
Environmental Protection
Agency

Office of Air Quality
Planning and Standards
Research Triangle Park NC 27711

EPA-450/3-82-014
August 1982

Air

EPA

Air Pollution Control Techniques for Non-Metallic Minerals Industry

SAND AND GRAVEL
PROCESSING
AP-42 Section
11.19.1
Reference Number
1

CTD

EPA-450/3-82-014

Air Pollution Control Techniques for Non-Metallic Minerals Industry

Emission Standards and Engineering Division

U.S. ENVIRONMENTAL PROTECTION AGENCY
Office of Air, Noise, and Radiation
Office of Air Quality Planning and Standards
Research Triangle Park, North Carolina 27711

August 1982

This report has been reviewed by the Emission Standards and Engineering Division of the Office of Air Quality Planning and Standards, EPA, and approved for publication. Mention of trade names or commercial products is not intended to constitute endorsement or recommendation for use. Copies of this report are available through the Library Services Office (MD-35), U.S. Environmental Protection Agency, Research Triangle Park, N.C. 27711, or from the National Technical Information Services, 5285 Port Royal Road, Springfield, Virgina 22161.

Foreword

This document supersedes the previously released document entitled Air Pollution Control Techniques for Crushed and Broken Stone Industry (EPA-450/3-80-019), which was published in May 1980. This document contains the information and emission test results previously presented for the crushed and broken stone industry in the above mentioned document.

TABLE OF CONTENTS

		Page
LIST OF FIGURES		v
LIST OF TABLES		vii
CHAPTER 1.	INTRODUCTION	1-1
1.1	INDUSTRY DESCRIPTION	1-1
1.2	SOURCES AND CONTROL OF EMISSIONS	1-2
CHAPTER 2.	SOURCES AND TYPES OF EMISSIONS	2-1
2.1	GENERAL	2-1
2.2	NON-METALLIC MINERALS PROCESSING OPERATIONS AND THEIR EMISSIONS	2-10
2.3	QUARRYING	2-18
2.4	CRUSHING	2-19
2.5	SCREENING OPERATIONS	2-31
2.6	MATERIAL HANDLING	2-35
2.7	GRINDING OPERATIONS	2-40
2.8	SEPARATING AND CLASSIFYING	2-45
2.9	BAGGING AND BULK LOADING OPERATIONS	2-45
2.10	WASHING	2-46
2.11	PORTABLE PLANTS	2-46
CHAPTER 3.	EMISSION CONTROL TECHNIQUES	3-1
3.1	CONTROL OF FUGITIVE DUST SOURCES	3-1
3.2	CONTROL OF FUGITIVE PROCESS SOURCES	3-7
3.3	FACTORS AFFECTING THE PERFORMANCE OF CONTROL METHODS	3-29
3.4	PERFORMANCE OF PARTICULATE EMISSION CONTROL TECHNIQUES	3-32
CHAPTER 4	COSTS OF EMISSION CONTROL TECHNOLOGY	4-1
4.1	MODEL PLANTS	4-1
4.2	COST OF CONTROLLING PROCESS SOURCES	4-4
4.3	COST OF CONTROLLING FUGITIVE DUST SOURCES	4-31

Table of Contents (con't.)

		Page
CHAPTER 5	ENVIRONMENTAL IMPACT	5-1
5.1	AIR POLLUTION IMPACT	5-1
5.2	WATER POLLUTION IMPACT	5-3
5.3	SOLID WASTE DISPOSAL IMPACT	5-3
5.4	ENERGY IMPACT	5-4
5.5	IMPACT ON NOISE	5-6
CHAPTER 6	COMPLIANCE TEST METHODS AND MONITORING TECHNIQUES	6-1
6.1	EMISSION MEASUREMENT METHODS	6-1
6.2	MONITORING SYSTEMS AND DEVICES	6-2
CHAPTER 7	ENFORCEMENT ASPECTS	7-1
7.1	PROCESS CONSIDERATIONS	7-1
7.2	FORMATS	7-2
CHAPTER 8	REGULATORY OPTIONS	8-1
8.1	REGULATORY OPTIONS FOR FUGITIVE DUST SOURCES	8-1
8.2	REGULATORY OPTIONS FOR FUGITIVE PROCESS SOURCES	8-5
8.3	SUMMARY	8-11
APPENDIX A	SUMMARY OF TEST DATA	A-1

LIST OF FIGURES

		Page
FIGURE 2.1	FLOW SHEET OF A TYPICAL CRUSHING PLANT.....	2-12
FIGURE 2.2	GENERAL SCHEMATIC FOR NON-METALLIC MINERALS PROCESSING.....	2-15
FIGURE 2.3	DOUBLE-TOGGLE JAW CRUSHER.....	2-22
FIGURE 2.4	SINGLE-TOGGLE JAW CRUSHER.....	2-22
FIGURE 2.5	PIVOTED SPINDLE GYRATORY.....	2-25
FIGURE 2.6	CONE CRUSHER.....	2-25
FIGURE 2.7	DOUBLE-ROLL CRUSHER.....	2-27
FIGURE 2.8	SINGLE ROLL CRUSHER.....	2-28
FIGURE 2.9	HAMMER MILL.....	2-29
FIGURE 2.10	IMPACT CRUSHER.....	2-30
FIGURE 2.11	VIBRATING GRIZZLY.....	2-33
FIGURE 2.12	VIBRATING SCREEN.....	2-33
FIGURE 2.13	CONVEYOR BELT TRANSFER POINT.....	2-36
FIGURE 2.14	BUCKET ELEVATOR TYPES.....	2-38
FIGURE 2.15	ROLLER MILL.....	2-42
FIGURE 2.16	BALL MILL.....	2-44
FIGURE 2.17	FLUID-ENERGY MILL.....	2-44
FIGURE 2.18	PORTABLE PLANT.....	2-48
FIGURE 3.1	WET DUST SUPPRESSION SYSTEM.....	3-10
FIGURE 3.2	DUST SUPPRESSION APPLICATION AT CRUSHER DISCHARGE.	3-12
FIGURE 3.3	HOOD CONFIGURATION USED TO CONTROL A CONE CRUSHER.	3-15
FIGURE 3.4	HOOD CONFIGURATION FOR VIRBRATING SCREEN.....	3-17
FIGURE 3.5	HOOD CONFIGURATION FOR CONVEYOR TRANSFER, LESS THAN 0.91 METER (3 FEET) TALL.....	3-18
FIGURE 3.6	HOOD CONFIGURATION FOR A CHUTE TO BELT OR CONVEYOR TRANSFER GREATER THAN 0.91 METER (3 FEET) TALL.....	3-19
FIGURE 3.7	EXHAUST CONFIGURATION AT BIN OR HOPPER.....	3-21
FIGURE 3.8	BAG FILLING VENT SYSTEM.....	3-22

List of Figures (con't.)

		Page
FIGURE 3.9	TYPICAL BAGHOUSE OPERATION.....	3-24
FIGURE 3.10	BAGHOUSE CLEANING METHODS.....	3-25
FIGURE 3.11	MECHANICAL-CENTRIFUGAL SCRUBBER.....	3-28
FIGURE 3.12	TYPICAL COMBINATION DUST CONTROL SYSTEM.....	3-30
FIGURE 3.13	PARTICULATE EMISSIONS FROM NON-METALLIC MINERAL PROCESSING OPERATIONS.....	3-39
FIGURE 3.14	SUMMARY OF VISIBLE EMISSION MEASUREMENTS FROM BEST CONTROLLED PRIMARY CRUSHING SOURCE (PORTABLE-PLANT R) BY MEANS OF WET SUPPRESSION (ACCORDING TO EPA METHOD 9).....	3-46
FIGURE 3.15	SUMMARY OF VISIBLE EMISSION MEASUREMENTS FROM BEST CONTROLLED SECONDARY CRUSHING SOURCE (PORTABLE-PLANT R) BY MEANS OF WET SUPPRESSION (ACCORDING TO EPA METHOD 9).....	3-47
FIGURE 3.16	SUMMARY OF VISIBLE EMISSION MEASUREMENTS FROM BEST CONTROLLED PRIMARY CRUSHING SOURCE (FIXED-PLANT S) BY MEANS OF WET SUPPRESSION (ACCORDING TO EPA METHOD 9).....	3-48
FIGURE 3.17	SUMMARY OF VISIBLE EMISSION MEASUREMENTS FROM BEST CONTROLLED SMALL SECONDARY CRUSHER (FIXED-PLANT S) BY MEANS OF WET SUPPRESSION (ACCORDING TO EPA METHOD 9).....	3-49
FIGURE 3.18	SUMMARY OF VISIBLE EMISSION MEASUREMENTS FROM BEST CONTROLLED LARGE SECONDARY CRUSHING SOURCE (FIXED-PLANT S) BY MEANS OF WET SUPPRESSION (ACCORDING TO EPA METHOD 9).....	3-50

LIST OF TABLES

		Page
TABLE 2.1	INDUSTRY CHARACTERISTICS	2-3
TABLE 2.2	MAJOR USES OF THE NON-METALLIC MINERALS	2-5
TABLE 2.3	POSSIBLE SOURCES OF EMISSIONS	2-14
TABLE 2.4	EMISSION SOURCES AT NON-METALLIC MINERAL FACILITIES	2-16
TABLE 2.5	PARTICULATE SIZE DATA FOR NON-METALLIC MINERAL PROCESSING	2-17
TABLE 2.6	RELATIVE CRUSHING MECHANISM UTILIZED BY VARIOUS CRUSHERS	2-20
TABLE 2.7	APPROXIMATE CAPACITIES OF JAW CRUSHERS	2-23
TABLE 2.8	APPROXIMATE CAPACITIES OF GYRATORY CRUSHERS	2-23
TABLE 2.9	PERFORMANCE DATA FOR CONE CRUSHERS	2-26
TABLE 3.1	PARTICULATE EMISSION SOURCES AND APPLICABLE EMISSION CONTROL TECHNIQUES	3-2
TABLE 3.2	BAGHOUSE UNITS TESTED BY EPA	3-33
TABLE 3.3	AIR-TO-CLOTH RATIOS FOR FABRIC FILTERS USED FOR EXHAUST EMISSION CONTROL	3-36
TABLE 3.4	SUMMARY OF INLET CONCENTRATIONS OF PARTICULATE MATTER DURING EPA TESTING	3-38
TABLE 3.5	SUMMARY OF VISIBLE EMISSIONS MEASUREMENTS FROM FUGITIVE SOURCES CONTROLLED BY DRY COLLECTION SYSTEMS	3-41
TABLE 3.6	SUMMARY OF VISIBLE EMISSIONS MEASUREMENTS FROM FUGITIVE NONCRUSHING SOURCES CONTROLLED BY WET SUPPRESSION (ACCORDING TO EPA METHOD 22)	3-44
TABLE 4.1	PARAMETERS FOR FIXED CRUSHING MODEL PLANTS (PLANT TYPE 1)	4-2
TABLE 4.2	PARAMETERS FOR FIXED CRUSHING AND GRINDING MODEL PLANTS (PLANT TYPE 2)	4-5

List of Tables (con't.)

		Page
TABLE 4.3	PARAMETERS FOR PORTABLE CRUSHING MODEL PLANT (PLANT TYPE 3)	4-7
TABLE 4.4	PLANT SIZES FOR NON-METALLIC MINERALS INDUSTRY (METRIC UNITS)	4-8
TABLE 4.4	PLANT SIZES FOR NON-METALLIC MINERALS INDUSTRY (ENGLISH UNITS)	4-9
TABLE 4.5	TECHNICAL PARAMETERS USED IN DEVELOPING CONTROL SYSTEMS COSTS	4-10
TABLE 4.6	ANNUALIZED COST PARAMETERS	4-13
TABLE 4.7	FABRIC FILTER COSTS FOR PLANT TYPE 1: 68 Mg/Hour	4-15
TABLE 4.8	FABRIC FILTER COSTS FOR PLANT TYPE 1: 135 Mg/Hour	4-16
TABLE 4.9	FABRIC FILTER COSTS FOR PLANT TYPE 1: 270 Mg/Hour	4-17
TABLE 4.10	FABRIC FILTER COSTS FOR PLANT TYPE 1: 540 Mg/Hour	4-18
TABLE 4.11	FABRIC FILTER COSTS FOR PLANT TYPE 2: 9.1 Mg/Hour	4-19
TABLE 4.12	FABRIC FILTER COSTS FOR PLANT TYPE 2: 23 Mg/Hour	4-20
TABLE 4.13	FABRIC FILTER COSTS FOR PLANT TYPE 2: 135 Mg/Hour	4-21
TABLE 4.14	FABRIC FILTER COSTS FOR PLANT TYPE 2: 270 Mg/Hour	4-22
TABLE 4.15	FABRIC FILTER COSTS FOR PLANT TYPE 3: 135 Mg/Hour	4-24
TABLE 4.16	CAPITAL COST FOR WET DUST SUPPRESSION CONTROL SYSTEMS AT CRUSHING PLANTS	4-27

List of Tables (con't.)

List of Tables (con't.)

		Page
TABLE 4.17	CAPITAL AND INDIRECT COSTS FOR WET DUST SUPPRESSION.....	4-28
TABLE 4.18	BREAKDOWN OF INDIRECT COST FACTOR.....	4-29
TABLE 4.19	TOTAL ANNUALIZED COST FOR WET DUST SUPPRESSION CONTROL SYSTEMS FOR CRUSHING PLANTS.....	4-30
TABLE 4.20	TOTAL INSTALLED AND ANNUALIZED COST FOR COMBINATION CONTROL SYSTEMS.....	4-32
TABLE 4.21	CAPITAL INVESTMENT AND ANNUAL COSTS FOR CONTROLLING FUGITIVE DUST EMISSIONS FROM HAUL ROADS.....	4-34
TABLE 4.22	UNIT COSTS FOR CONTROLLING FUGITIVE DUST EMISSIONS FROM HAUL ROADS.....	4-35
TABLE 4.23	ANNUAL COST OF WATERING ROADWAYS.....	4-36
TABLE 4.24	CAPITAL INVESTMENT FROM REDUCING FUGITIVE DUST EMISSIONS FROM STORAGE PILES.....	4-38
TABLE 5.1	ACHIEVABLE EMISSION REDUCTIONS USING DRY COLLECTION.....	5-2
TABLE 5.2	ENERGY REQUIREMENTS FOR MODEL NON-METALLIC MINERAL PLANTS.....	5-5
TABLE 8.1	SUMMARY OF ENVIRONMENTAL AND ENERGY IMPACTS.....	8-12

1. INTRODUCTION

This document presents information on the emission of particulates and their control at non-metallic mineral processing facilities. Emissions from both process sources, except combustion sources (i.e., dryers and calciners), and fugitive dust sources are considered. Applicable control techniques are identified and discussed in terms of performance, environmental impacts, energy requirements, and cost.

This document supersedes the document entitled Air Pollution Control Techniques for Crushed and Broken Stone Industry (EPA-450/3-80-019) which was published in May 1980. This document contains the information and emission test results previously presented for the crushed and broken stone industry in the above mentioned document.

1.1. INDUSTRY DESCRIPTION

The 17 non-metallic minerals selected for investigation in this study are:

Crushed and broken stone	Clay
Sand and gravel	Gypsum
Rock salt	Pumice
Gilsonite	Talc
Boron	Barite
Fluorspar	Feldspar
Diatomite	Perlite
Vermiculite	Mica
Kyanite	

Total domestic production of these non-metallic minerals for 1980 was about 1,686 million megagrams (1,859 million short tons). Geographically, the non-metallic minerals industry is highly dispersed with all States reporting production of at least one of these 17 non-metallic minerals. The non-metallic mineral processing industry is highly diverse in terms of unit production capacities and end product uses.

In 1980, there were approximately 11,000 active operations in the United States located in urban, suburban, and rural areas. Mined non-metallic minerals are reduced and graded into products by a number of component process operations integrated into a processing plant. Plants may be either fixed or portable and range in capacity from less than 9.1 megagrams (10 tons) to several thousand megagrams (tons) per hour.

The processing of non-metallic minerals can involve a series of distinct yet interdependent operations. These include quarrying or mining operations (drilling, blasting, loading, and hauling) and plant process operations (crushing, grinding, conveying, and other material handling and transfer operations). Most non-metallic minerals require additional processing (washing, drying, calcining, and flotation treatment) depending on the rock type and consumer requirements. However, these additional processing operations will not be discussed in this document. Some of the individual operations can be associated with a high degree of moisture, such as wet crushing and grinding, washing screens, and dredging. These wet processes do not generate particulate emissions and will not be discussed. All dry processing operations are considered potentially significant sources of nuisance particulate emissions, especially when the operations are located near residential areas.

1.2 SOURCES AND CONTROL OF EMISSIONS

All quarrying and processing operations, including surface mining, crushing, screening, and material handling and transfer operations, are potential sources of particulate emissions. Emission sources may be categorized as either process sources or fugitive dust sources. Process sources include those sources for which emissions are amenable to capture and subsequent control. Fugitive dust sources generally involve the reentrainment of settled dust by wind or machine movement. Factors affecting emissions from either source category include the type, quantity, and the moisture content of the non-metallic mineral processed, the type of equipment and operating practices employed, and topographical and climatic factors.

Principal quarrying operations include drilling, blasting, secondary breakage, and the loading and hauling of broken rock to the non-metallic mineral processing plant. Emissions from drilling operations are caused by the removal of cuttings and dust from the bottom of the hole by air flushing. Generally, two control techniques are available: (1) water injection and (2) the aspiration of dry cuttings to a control device. Although largely uncontrollable, emissions from blasting can be minimized by using good blasting practices and scheduling blasts only under favorable meteorological conditions. If secondary breakage is required, drop-ball cranes are generally used and resulting emissions are relatively small. Emissions generated by the loading of broken rock into in-plant haulage vehicles by front-end loaders or shovels can be controlled by wetting down rock piles prior to loading. At most quarries, large haulage vehicles are used to transport broken rock from the quarry to the processing plant over unpaved roads. Emissions generated are proportional to the surface condition of the roads and the volume and speed of the vehicle traffic. Control measures include methods to improve road surfaces including watering, surface treatment with chemical dust suppressants, soil stabilization and paving, and operational changes to reduce traffic volume and vehicle speed.

The principal crushing and grinding process facilities include crushers, grinders, screens, and material handling and transfer equipment. Particulate emissions from process equipment are generally discharged at feed and process material discharge points, and emissions from material handling equipment at transfer points. Available emission control techniques for these plant-generated emissions include wet dust suppression, dry collection, and the combination of the two. Wet dust suppression consists of introducing moisture into the material flow to prevent or suppress the emission of fine particulates. Dry collection involves hooding and enclosing dust-producing points and venting emissions to a collection device. Combination systems utilize both methods at different stages throughout the processing plant.

Other particulate emission sources include windblown dust from open conveyors, stockpiles, and the plant yard. Control measures range from the use of dust suppression techniques to the erection of enclosures or windbreaks.

2.0 SOURCES AND TYPES OF EMISSIONS

2.1 GENERAL

There are many non-metallic minerals which are individually produced in a wide range of quantities. For example, the annual domestic demand for sand and gravel is quoted in millions of megagrams (tons), whereas the production of industrial diamonds and gem stones is measured in carats. Previous EPA studies have investigated some of these non-metallic minerals, namely, coal, phosphate rock, and asbestos. The 17 non-metallic minerals selected for this study are:

Crushed and Broken Stone	Clay
Sand and Gravel	Gypsum
Rock Salt	Pumice
Gilsonite	Talc
Boron	Barite
Fluorspar	Feldspar
Diatomite	Perlite
Vermiculite	Mica
Kyanite	

These 17 categories are based upon Bureau of Mines classifications and are the highest mined production segments of the non-metallic minerals industry which have crushing and grinding operations, excluding coal, phosphate rock, and asbestos.

Total domestic production of these non-metallic minerals for 1980 was about 1,686 million megagrams (1,859 million short tons). The estimated domestic production level of these minerals in 1985 has been projected to be 1,960 million megagrams (2,160 million short tons). The value of the minerals ranges from $3.20 per megagram ($2.90 per ton) for sand and gravel, to $261 per megagram ($237 per ton) for boron. Geographically, the non-metallic minerals industry is highly dispersed, with all states reporting production of at least one of these 17 non-metallic minerals. The industry is also extremely diverse in terms of production capacities per facility (from five to several thousand megagrams (tons per hour) and end product uses.

2.1.1 Industry Characteristics

Table 2.1 presents industry characteristics for each mineral under consideration. Crushed stone and sand and gravel are by far the largest segments, accounting for 1,610 million megagrams (1,775 million tons) of the 1,686 million megagrams (1,860 million tons) produced by the 17 industries. There are about 6,100 processing plants in the sand and gravel industry and about 4,100 quarries worked in the crushed stone industry. Each of the other industries has less than 100 processing plants, except for the clay industry which has about 120 plants.

Sand and gravel plants are located in every State. Crushed stone plants are located in every State except Delaware and North Dakota. Clay plants are located in every State except Vermont, Rhode Island, Delaware, Hawaii, and Alaska. Processing plants for the other industries are usually distributed among a few States where those mineral deposits are located. One of the minerals is principally mined and processed in only one State: boron in California.

Projected growth rates are also presented in Table 2.1. The growth rates are projected to increase at compounded annual rates of up to 5.5 percent through the year 2000.

2.1.2 End Uses

End uses for the non-metallic minerals are many and diverse. The minerals may be used either directly in their natural state or processed into a variety of manufactured products. Generally, they can be classified as either minerals for the construction industry; minerals for the chemical and fertilizer industries; or clay, ceramic, refractory, and miscellaneous minerals. Minerals generally used for construction are crushed and broken stone, sand and gravel, gypsum, gilsonite, perlite, pumice, vermiculite, and mica. Minerals generally used in the chemical and fertilizer industries are barite, fluorspar, boron, and rock salt. Clay, feldspar, kyanite, talc, and diatomite can be generally classified as clay, ceramic, refractory, and miscellaneous minerals. Table 2.2 lists the major uses of each individual mineral.

TABLE 2.1 INDUSTRY CHARACTERISTICS[1,2]

Mineral	1980 Production 1000 megagrams (1000 tons)	1980 Price (Dollars/Mg)	Annual growth rate (%)	Major producing States in order of production	Number of active operations
Crushed and broken stone	889,136 (980,305)	3.66	3.2	Texas Florida Pennsylvania Illinois	4150 (quarries)
Sand and gravel	720,520 (794,400)	3.20	2.8	California Alaska Texas Ohio Michigan	6166
Clay	44,250 (48,790)	3.90-73.76	4.0	Georgia Texas Wyoming North Carolina	120
Rock Salt	10,710 (11,806)	16.15	4.0	Louisiana Texas New York	21
Gypsum (crude)	11,225 (12,376)	9.18	2.0	Texas California Iowa Michigan	73 (mines)
Pumice	3,405 (3,755)	4.54	3.4	Oregon New Mexico California Arizona	319
Gilsonite	**	-	2.0	Utah	2
Talc	1,336 (1,473)	40.79-229.00	2.9	Texas Vermont Montana	40 (mines)

TABLE 2.1 (continued)

Mineral	1980 Production 1000 megagrams (1000 tons)	1980 Price (Dollars/Mg)	Annual growth rate (%)	Major producing States in order of production	Number of active operations
Boron	1,400 (1,545)	261.73	4.1	California	6
Barite	2,036 (2,245)	32.39	2.2	Nevada Missouri	37
Fluorspar	83 (92)	110-197	3.8	Illinois	15
Feldspar	644 (710)	36.03	3.6	North Carolina	16
Diatomite	625 (689)	161.00	5.4	California Nevada Oregon	9
Perlite	580 (638)	28.51	3.7	New Mexico	13
Vermiculite	306 (337)	76.88	4.0	Montana South Carolina	4
Mica	99 (109)	131.41	1.6	North Carolina New Mexico	15
Kyanite	**	77-141	4.7	Virginia Georgia	3

**Production statistics are withheld to avoid disclosing company proprietary data.

TABLE 2.2 MAJOR USES OF THE NON-METALLIC MINERALS

Mineral	Major uses
Crushed and broken stone	Construction, cement manufacturing
Sand and gravel	Construction
Clay	Bricks, cement, refractory, paper
Rock salt	Highway use, chlorine
Gypsum	Wallboard, plaster, cement, agriculture
Pumice	Road construction, concrete
Gilsonite	Asphalt paving
Talc	Ceramics, paint, toilet preparations
Boron	Glass, soaps, fertilizer
Barite	Drilling mud, chemicals
Fluorspar	Hydrofluoric acid, iron and steel, glass
Feldspar	Glass, ceramics
Diatomite	Filtration, filters
Perlite	Insulation, filter aid, plaster aggregate
Vermiculite	Concrete
Mica	Paint, joint cement, roofing
Kyanite	Refractories, ceramics

2.1.3 Rock Types and Distribution

Major rock types processed by the crushed and broken stone industry include limestone and dolomite (which accounted for 74 percent of the total tonnage in 1980 and has the widest and most important end use range); granite (12 percent), trap rock (8 percent) and sandstone, quartz and quartzite (3 percent). Rock types including calcareous marl, marble, shell, slate and miscellaneous others accounted for only 3 percent. Classifications used by the industry vary considerably and in many cases do not reflect actual geological definitions.

Limestone and dolomite are sedimentary rocks formed from accumulations of animal remains or chemical precipitation of carbonates in water. In a pure state, limestone consists of crystalline or granular calcium carbonate (calcite), while dolomite consists of calcium-magnesium carbonate (dolomite). Both are often found together in the same rock deposit. Depending on the proportions of each, the rock may be classified as limestone, dolomitic limestone, calcareous dolomite or dolomite. Deposits are common and are distributed throughout most parts of the country, although primarily located in the Central, Middle Atlantic and South Atlantic regions which combined accounted for over 94 percent of the total production in 1980.

Commercially, granite consists of any light-colored, coarse-grained igneous rock. It is composed chiefly of quartz, feldspar and, usually mica. Deposits are located in the South Atlantic, northeastern, North Central and western regions of the country. The South Atlantic region accounted for more than 75 percent of the total tonnage of granite produced in 1980.

Trap rock includes any dark colored, fine-grained igneous rock composed of the ferro-magnesium minerals and basic feldspars with little or no quartz. Common varieties include basalts, biabases and gabbros. Deposits are mostly found in the New England, Middle Atlantic and Pacific regions, which combined accounted for 80 percent of all trap rock produced in 1980.

Sandstones and quartzitic rocks are scattered throughout the country. Sandstones are sedimentary rocks composed predominantly of cemented quartz grains. The cementing material may be calcium carbonate, iron oxide or clay.

Sand and gravel are products of the weathering of rocks and thus consist predominantly of silica. Often, varying amounts of other minerals such as iron oxides, mica, and feldspar are present. Deposits are common and are distributed throughout the country.

Clays are a group of fine-grained non-metallic minerals which are mostly hydrous aluminum silicates that contain various amounts of organic and inorganic impurities. Clays are classified into six groups by the Bureau of Mines: kaolin, ball clay, fire clay, bentonite, fuller's earth, and miscellaneous (common) clay.

Kaolin is a clay in which the predominant clay mineral is kaolinite. Large quantities of high quality kaolin are found in Georgia. Ball clay consists principally of kaolinite, but has a higher silica-to-alumina ratio than is found in most kaolin, as well as larger quantities of mineral impurities and much organic material. Ball clays are mined in Kentucky, Tennessee, and New Jersey.

The terms "fire clay" and "stoneware clay" are based on refractoriness, or on intended usage (fire clay indicating potential use for refractories, and stoneware clay indicating uses for such items as crocks, jugs, and jars). Fire clays are basically kaolinitic but include other clay minerals and impurities. Included under the general term fire clay are the disapore, burley, and burley-flint clays. Fire clay deposits are widespread in the United States, with the greatest reserves being found in the Middle Atlantic region.

Bentonites are composed essentially of minerals of the montmorillonite group. The swelling type has a high sodium iron concentration, whereas the nonswelling types are usually high in calcium. Bentonite is presently produced in Wyoming and Montana.

Fuller's earths are essentially montmorillonite or attapulgite. A small area in Georgia and Florida contains the known reserve of attapulgite-type fuller's earth.

The term "miscellaneous (common) clay" is a statistical designation used by the Bureau of Mines to refer to clays and shales not included under the other five clay types. Miscellaneous clay may contain some kaolinite and montmorillonite, but illite usually predominates, particularly in the shales. Miscellaneous clay is widespread throughout the United States.

Rock salt consists of sodium chloride and is the chief source of all forms of sodium. Rock salt is mined on a large scale in Michigan, Texas, New York, Louisiana, Ohio, Utah, New Mexico, and Kansas.

Gypsum is a hydrous calcium sulfate normally formed as a chemical precipitate from marine waters of high salinity. Domestic reserves of gypsum are geographically distributed in 23 states. Areas deficient in gypsum reserves are Minnesota, Wisconsin, the Pacific Northwest, the New England States, the deep South to the east of Louisiana, and northern California.

Pumice is a rock of igneous origin, ranging from acidic to basic in composition, with a cellular structure formed by explosive or effusive volcanism. The commercial designation includes the more precise petrographic descriptions for pumice, pumicite (volcanic ash), volcanic cinders, and scoria. Deposits are mostly found in the Western States.

The mineral gilsonite is a variety of native asphalt which has many applications. Gilsonite occurs in large boulders, several inches across. It is black, lustrous mineral found in the Uintah basin in Utah and Colorado.

The mineral talc is a soft hydrous magnesium silicate, $3\ MgO \cdot 4SiO_2 \cdot H_2O$. The talc of highest purity is derived from magnesium-rich metamorphic carbonate rocks; less pure talc from metamorphosed ultra basic igneous rocks. Soapstone is a term used for a massive form of rock containing the mineral. Pyrophyllite ($Al_2O_3 \cdot 4SiO_2 \cdot H_2O$) is a hydrous aluminum silicate similar to talc in properties. It is principally found in North Carolina. Talc-group minerals are principally produced in New York, Texas, Vermont, California, and Montana.

Boron is a versatile and useful element used mainly in the form of its many compounds, of which borax and boric acid are the best known. Many minerals contain boron, but only a few are commercially valuable as sources of boron. The principal boron minerals are borax, kernite, and colemanite. Half of the commercial world reserves are in southern California as bedded deposits of borax (sodium borate) and colemanite (calcium borate), or as solutions of boron minerals in Searles Lake brines.

Barite is almost pure barium sulfate ($BaSO_4$), and is the principal commercial mineral source of barium and barium compounds. The reserves are principally in Missouri and the southern Appalachian States, with the remainder in Arkansas, Nevada, and California.

Fluorine is derived from the mineral fluorite (CaF_2), commonly known as fluorspar. Fluorspar is principally found in deposits located in Kentucky and Illinois.

Feldspar is a general term used to designate a group of closely related minerals, especially abundant in igneous rocks and consisting essentially of aluminum silicates in combination with varying proportions of potassium, sodium, and calcium. The principal feldspar species are orthclase or microcline (both $K_2O \cdot Al_2O_3 \cdot 6SiO_2$), albite ($Na_2O \cdot Al_2O_3 \cdot 6SiO_2$) and anorthite ($CaO \cdot Al_2O_3 \cdot 2SiO_2$). North Carolina is the foremost domestic producer, followed in order of output by California, Connecticut, and Georgia.

Diatomite is a material of sedimentary origin consisting mainly of an accumulation of skeletons or frustules formed as a protective covering by diatoms, single-celled microscopic plants. The skeletons are essentially amorphous hydrated or opaline silica but occassionally are partly composed of alumina. The terms "diatomaceous earth" and "kieselguhr" are sometimes used interchangeably and are synonymous with diatomite. Diatomite is found only in the Western States with a substantial part of the total reserve found in the Lompoc, California area.

Perlite is chemically a metastable amorphous aluminum silicate with minor impurities and inclusions of various other metal oxides and minerals. Perlite is mostly found in the Western States.

Vermiculite is a micaceous mineral with a ferromagnesium-aluminum silicate composition and the property of exfoliating to a low-density material when heated. Presently, vermiculite is mined from deposits located in Montana and South Carolina.

Mica is a group name for a number of complex hydrous potassium aluminum silicate minerals differing in chemical composition and physical properties but characterized by excellent basal cleavage that facilitates splitting into thin, tough, flexible, elastic sheets. These minerals can be classified into four principal types named after the most common mineral in each group - muscovite (potassium mica), phlogopite (magnesium mica), biotite (iron mica), and lepidolite (lithium mica). The major producing regions in the United States are the Southeast and West.

Kyanite and the related minerals - andalusite, sillimanite, dumortierite, and topaz - are natural aluminum silicates which can be converted to mullite, a stable refractory raw material. Reserves of kyanite and the related minerals are mostly found in Virginia, North and South Carolina, Idaho, and Georgia.

2.2 NON-METALLIC MINERALS PROCESSING OPERATIONS AND THEIR EMISSIONS

2.2.1 Process Description

Non-metallic mineral processing involves the following sequence of steps: extracting from the ground, loading, unloading and dumping, conveying, crushing, screening, grinding, and classifying. Some minerals processing also includes washing, drying, calcining, or flotation operations. The operations performed depend on the rock type and the desired product.

The mining techniques used for the extraction of non-metallic minerals vary with the particular mineral, the nature of the deposit, and the location of the deposit. Mining is carried out both underground and in open pits. Some minerals require blasting while others can be removed by bulldozer or dredging operations alone.

The non-metallic minerals are normally delivered to the processing plant by truck, and dumped into a hoppered feeder, usually a vibrating grizzly type, or onto screens, as illustrated in Figure 2.1. These screens separate or scalp the larger boulders from the finer rocks that do not require primary crushing, thus minimizing the load to the primary crusher. Jaw or gyratory crushers are usually used for initial reduction, although impact crushers are gaining favor for crushing low-abrasion rock such as talc, and where high reduction ratios are desired. The crusher product, normally 7.5 to 30 centimeters (3 to 12 inches) in size, and the grizzly throughs (undersize material) are discharged onto a belt conveyor and normally transported to either secondary screens and crusher, or to a surge pile or silo for temporary storage.

The secondary screens generally separate the process flow into either two or three fractions (oversize, undersize, and throughs) prior to the secondary crusher. The oversize is discharged to the secondary crusher for further reduction. The undersize, which requires no further reduction at this stage, normally by-passes the secondary crusher. A third fraction, the throughs, is separated when processing some minerals. Throughs contain unwanted fines that are usually removed from the process flow and stockpiled as crusher-run material. For secondary crushing, gyratory or cone crushers are most commonly used, although impact crushers are used at some installations.

The product from the secondary crushing stage, usually 2.5 centimeters (1 inch) or less in size, is normally transported to a secondary screen for further sizing. Sized material from this screen is either discharged directly to a tertiary crushing stage or conveyed to a fine-ore bin which supplies the milling stage. Cone crushers or hammermills are normally used for tertiary crushing. Rod mills, ball mills, and hammermills are normally used in the milling stage. The product from the tertiary crusher or the mill is usually conveyed to a type of classifier such as a dry vibrating

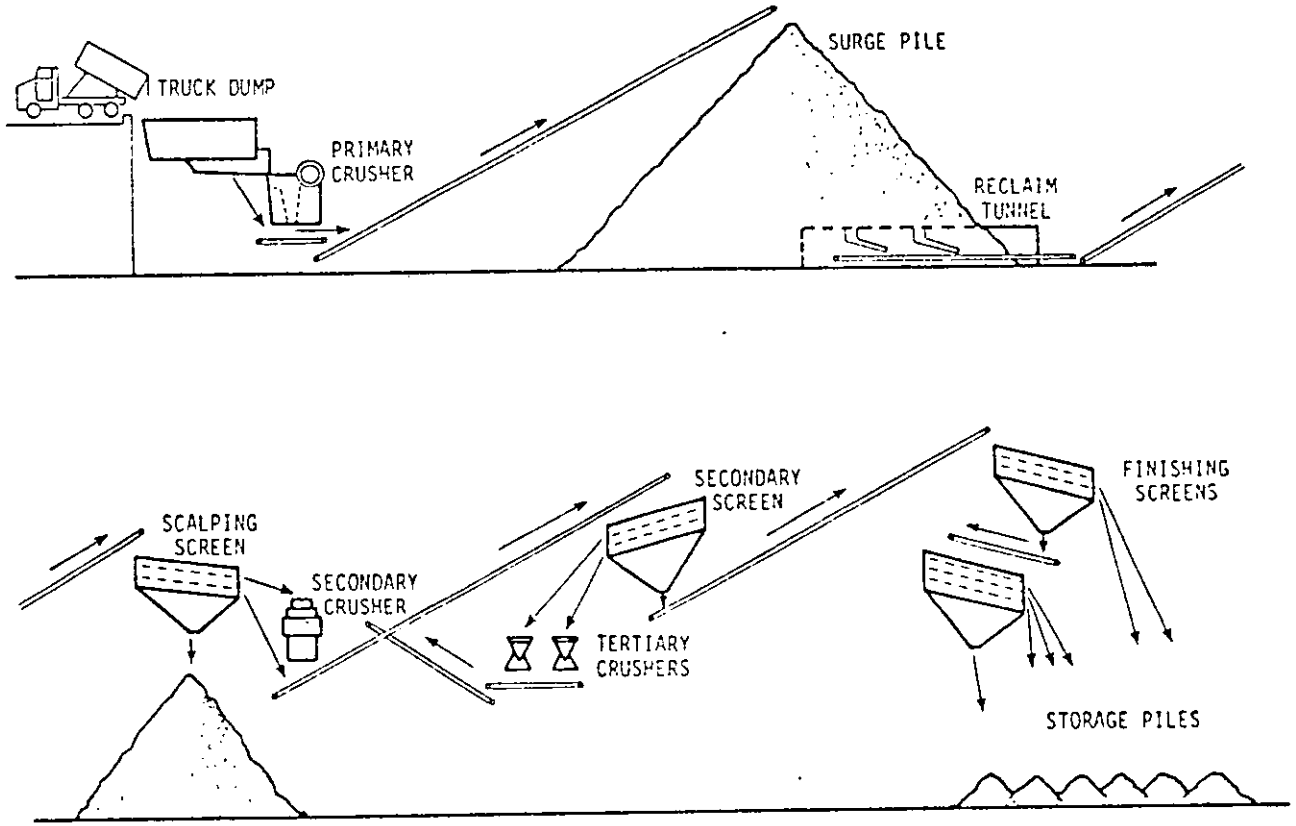

Figure 2.1 Flowsheet of a Typical Crushing Plant

screen system, an air separator, or a wet rake or spiral system (if wet grinding was employed) which also dewaters the material. The oversize is returned to the tertiary crusher or mill for further size reduction. At this point, some mineral end products of the desired grade are conveyed directly to finished product bins, or are stockpiled in open areas by conveyors or trucks. Other minerals such as talc or barite may require air classification to obtain the required mesh size, and treatment by flotation to obtain the necessary chemical purity and color.

Most non-metallic minerals require additional processing depending on the rock type and consumer requirements. In certain cases, especially in the crushed stone and sand and gravel industry, stone washing may be required to meet particular end product specifications or demands such as for concrete aggregate. Some minerals, especially certain lightweight aggregates, are washed and dried, sintered, or treated prior to primary crushing. Others are dried following secondary crushing or milling. Sand and gravel, crushed and broken stone, and most lightweight aggregates normally are not milled and are screened and shipped to the consumer after secondary or tertiary crushing. Some sand and gravel plants are wet process operations and may require little, if any, crushing operations. Table 2.3 lists the various unit process operations for each industry. Figures 2.1 and 2.2 show simplified diagrams of the typical process steps required for the non-metallic minerals investigated in this report.

2.2.2 Sources of Emissions

Essentially all mining and mineral processing operations are potential sources of particulate emissions. Emissions may be categorized as either fugitive emissions or fugitive dust. Operations included within each category are listed in Table 2.4. Fugitive emission sources include those sources for which emissions are amenable to capture and subsequent control. Fugitive dust sources are not amenable to control using conventional control systems and generally involve the reentrainment of settled dust by wind or machine movement.

TABLE 2.3 POSSIBLE SOURCES OF EMISSIONS

Type of plant	Crushers	Screens	Transfer points	Grinders	Loading operation	Bagging operation	Dryers or calciners	Drilling operation
Crushed and broken stone	X	X	X		X			X
Sand & gravel	X	X	X		X			
Clay	X	X	X	X	X	X	X	
Gypsum	X	X	X	X		X	X	
Pumice	X	X	X	X		X	X	
Feldspar	X	X	X	X	X		X	
Boron	X	X	X	X	X	X	X	X
Talc	X	X	X	X	X	X	X	X
Barite	X	X	X	X		X		
Diatomite	X	X	X	X		X	X	
Perlite	X	X	X	X	X	X	X	
Rock salt	X	X	X					
Fluorspar	X	X	X	X			X	
Gilsonite	X	X					X	
Mica	X	X		X				
Kyanite	X			X			X	X
Vermiculite	X	X	X	X	X	X	X	X

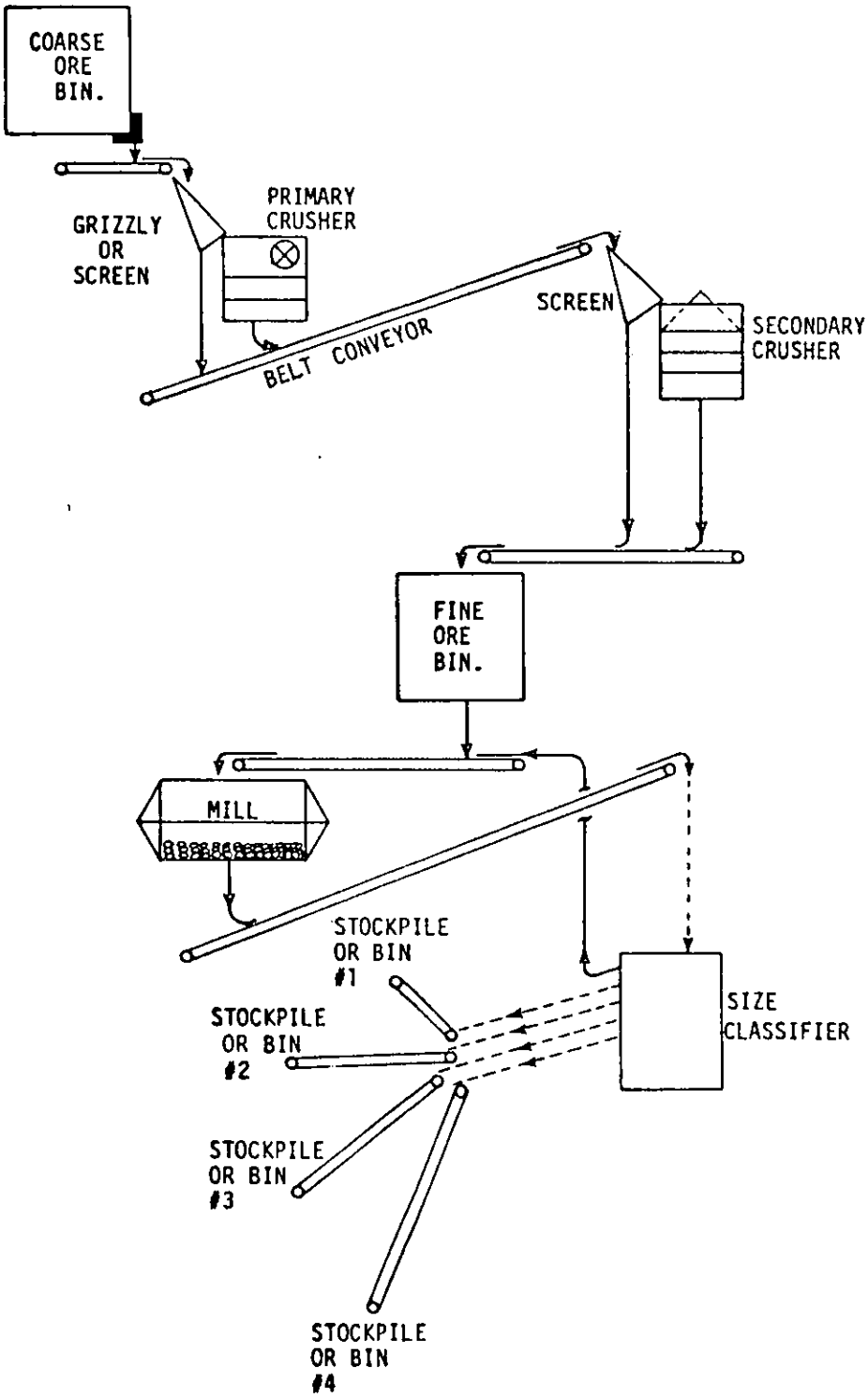

Figure 2.2 General Schematic for Non-Metallic Minerals Processing

TABLE 2.4. EMISSION SOURCES AT NON-METALLIC MINERAL FACILITIES

Fugitive Emissions	Fugitive Dust Sources
Drilling	Blasting
Crushing	Hauling
Screening	Haul Roads
Grinding	Stockpiles
Conveyor Transfer Points	Plant yard
Loading	Conveying

2.2.3 Factors that Affect Emissions from Mining and Process Operations

In general, the factors that affect emissions from most mineral processing operations include: the type of ore processed,[3] the type of equipment and operating practices employed, the moisture content of the ore, the amount of ore processed, and a variety of geographical and seasonal factors. These factors, discussed in more detail below, apply to both fugitive emission and fugitive dust sources associated with mining and processing plant operation.

The type of equipment and operating practices employed also affect uncontrolled emissions. In general, emissions from process equipment such as crushers, screens, grinders, and conveyors depend on the size distribution of the material and the velocity that is mechanically imparted to the material. For crushers, the particular type of crushing mechanism employed (compression or impaction) affects emissions. The effect of equipment type on uncontrolled emissions from all sources will be more fully discussed in subsequent sections of this report (see Sections 2.4 to 2.11).

Information is limited on the amount of emissions from non-metallic mineral processing operations. Table 2.5 presents information concerning the size of the particulates measured in the inlets to control devices at plants processing different non-metallic minerals.

TABLE 2.5 PARTICLE SIZE DATA FOR NON-METALLIC MINERAL PROCESSING[4-12]

Mineral	Process	Percent of particle size less than 2 μm	5 μm	10 μm	20 μm	Median (μm)
Clay (kaolin)	Roller mill	22	70			3.5
	Impact mill	18	70			3.8
Feldspar	Ball mill (inlet 1)	14	25	37	50	20.0
	(inlet 2)	6	16	27	44	25.0
Clay (fuller's earth)	Fluid energy mill	65	92			1.5
	Raymond mill	3	18			7.0
Talc	Ball mill		37	59	82	5 to 10
Gypsum	Raymond mill	0	40	80	90	6
Talc	Processing plant[a] (inlet 1)	1	11	34	64	14
	(inlet 2)	0.3	28	85	99.6	7.5
	(inlet 3)	1	18	60	90	9
Limestone	Primary crusher	0.2	1			>10
	Primary screen	1	3			>10
Limestone[b]	Primary crusher and hammermill	4	16	32	52	19
	Final screen	4	13	25	43	24
Traprock[b]	Tertiary crusher and final screen	4	16	34	62	15

[a]Crushing, grinding, and bagging operations all ducted to one baghouse.

[b]Particle size data reported are based on analysis of material collected in control device (baghouse).

The inherent moisture content or wetness of the rock processed can have a substantial effect on uncontrolled emissions. This is especially evident during mining, initial material handling, and initial plant process operations such as primary crushing. Surface wetness causes fine particles to agglomerate or adhere to the faces of larger stones with a resultant dust suppression effect. However, as new fine particles are created by crushing and attrition, and as the moisture content is reduced by evaporation, this suppressive effect diminishes and may even disappear. Depending on the geographic and climatic conditions, the moisture content of the mined rock ranges from nearly zero to several percent.

With regard to geographical and seasonal factors, the primary variables affecting uncontrolled particulate emissions are wind parameters and moisture content of the material. Wind parameters will vary with geographical location and season. It can be expected that the level of emissions from sources which are not enclosed (principally fugitive dust sources) will be greater during periods of high winds than periods of low winds. The moisture content of the material also varies with geographical location and season. Therefore, the level of uncontrolled emissions from both fugitive emission sources and fugitive dust sources will be greater in arid regions of the country than in temperate ones and greater during the summer months due to a higher evaporation rate.

2.3. QUARRYING

Sources of particulate emissions from quarrying operations include drilling, blasting, secondary breakage, and the loading and hauling of the mineral to the processing plant. Not all non-metallic mineral deposits require drilling and blasting to fragment portions of the deposits into pieces of material of convenient size for further processing. Some mineral deposits can be removed without blasting by the use of power equipment such as front-end loaders, drag lines, and dredges.

Particulate emissions from drilling operations are primarily caused by the removal of cuttings and dust from the bottom of the hole by air flushing. Compressed air is released down the hollow drill center, forcing cuttings and dust up and out the annular space formed between the hole wall and drill.

Blasting is used to displace solid rock from its quarry deposit and to fragment it into sizes which require a minimum of secondary breakage and which can be readily handled by loading and hauling equipment. The frequency of blasting ranges from several shots per day to one per week depending on the plant capacity and the size of individual shots. The effectiveness of a shot depends on the characteristics of the explosive and the rock. Emissions from blasting are evident from visual observations.

If secondary breakage is required, drop-ball cranes are usually employed. Normally, a pear-shaped or spherical drop-ball, weighing several tons, is suspended by a crane and dropped on the oversize rock as many times as needed to break it. Emissions are slight.

The excavation and loading of broken rock is normally performed by shovels and front-end loaders. Whether the broken rock is dumped into a haulage vehicle for transport or directly into the primary crusher, fugitive dust emissions may result. The most significant factor affecting these emissions is the wetness of the rock.

At most quarries, large capacity "off-the-road" haulage vehicles are used to transport broken rock from the quarry to the primary crusher over unpaved haul roads. The vehicle traffic on unpaved roads is responsible for a large portion of the fugitive dust generated by quarrying operations. Factors affecting fugitive dust emissions from hauling operations include the composition of the road surface, the wetness of the road, and the volume and speed of the vehicle traffic.

2.4 CRUSHING

Crushing is the process by which coarse material is reduced by mechanical energy and attrition to a desired size for mechanical separation (screening). The mechanical stress applied to rock fragments during crushing may be accomplished by either compression or impaction. These two methods of crushing differ in the duration of time needed to apply the breaking force. In impaction, the breaking force is applied very rapidly; in compression, the rock particle is slowly squeezed and forced to fracture. All types of crushers are both

compression and impaction to varying degrees. Table 2.6 ranks crushers according to the predominant crushing mechanism used (from top to bottom, compression to impaction). In all cases, there is some reduction by the rubbing of stone on stone or on metal surfaces (attrition).

TABLE 2.6. RELATIVE CRUSHING MECHANISM UTILIZED BY VARIOUS CRUSHERS[13]

Compression	Double roll crusher
	Jaw crusher
	Gyratory crusher
	Single roll crusher
	Rod mill (low speed)
	Ball mill
	Rod mill (high speed)
	Hammermill (low speed)
	Impact breaker
Impaction	Hammermill (high speed)

The size of the product from compression type crushers is controlled by the space between the crushing surfaces compressing the rock particle. This type of crusher produces a relatively closely graded product with a small proportion of fines. Crushers that reduce by impact, on the other hand, produce a wide range of sizes and high proportion of fines.

Because the size reduction achievable by one machine is limited, reduction in stages is frequently required. As noted previously, the various stages include primary, secondary, and perhaps tertiary crushing. Basically, the crushers used in the non-metallic minerals industry are: jaw, gyratory, roll, and impact crushers.

Jaw Crushers

Jaw crushers consist of a vertical fixed jaw and a moving inclined jaw which is operated by a single toggle or a pair of toggles. Rock is crushed by compression as a result of the opening and closing action of the moveable jaw against the fixed jaw. Their principal application in the industry is for primary crushing.

The most commonly used jaw crusher is the Balke or double-toggle type. As illustrated in Figure 2.3, an eccentric shaft drives a Pitman arm that raises and lowers a pair of toggle plates to open and close the moving jaw which is suspended from a fixed shaft. In a single-toggle jaw crusher, the moving jaw is itself suspended from an eccentric shaft and the lower part of the jaw is supported by a rolling toggle plate (Figure 2.4). Rotation of the eccentric shaft produces a circular motion at the upper end of the jaw and an elliptical motion at the lower end. Other types, such as the Dodge and overhead eccentric are used on a limited scale.

The size of a jaw crusher is defined by its feed opening dimensions and may range from about 15 x 30 centimeters to 213 x 168 centimeters (6 x 12 inches to 84 x 66 inches). The size reduction obtainable may range from 3:1 to 10:1 depending on the nature of the rock. Capacities are quite variable depending on the unit and its discharge setting. Table 2.7 presents approximate capacities for a number of jaw crusher sizes at both minimum and maximum discharge settings.

Gyratory Crushers

Simply, a gyratory crusher may be considered to be a jaw crusher with circular jaws between which the material flows and is crushed. As indicated in Table 2.8, however, a gyratory crusher has a much greater capacity than a jaw crusher with an equivalent feed opening.

There are basically three types of gyratory crushers: the pivoted spindle, fixed spindle, and cone. The fixed and pivoted spindle gyratories are used for primary and secondary crushing, and cone crushers are used for secondary and tertiary crushing. The larger gyratories are sized according to feed opening and the small units are sized by cone diameters.

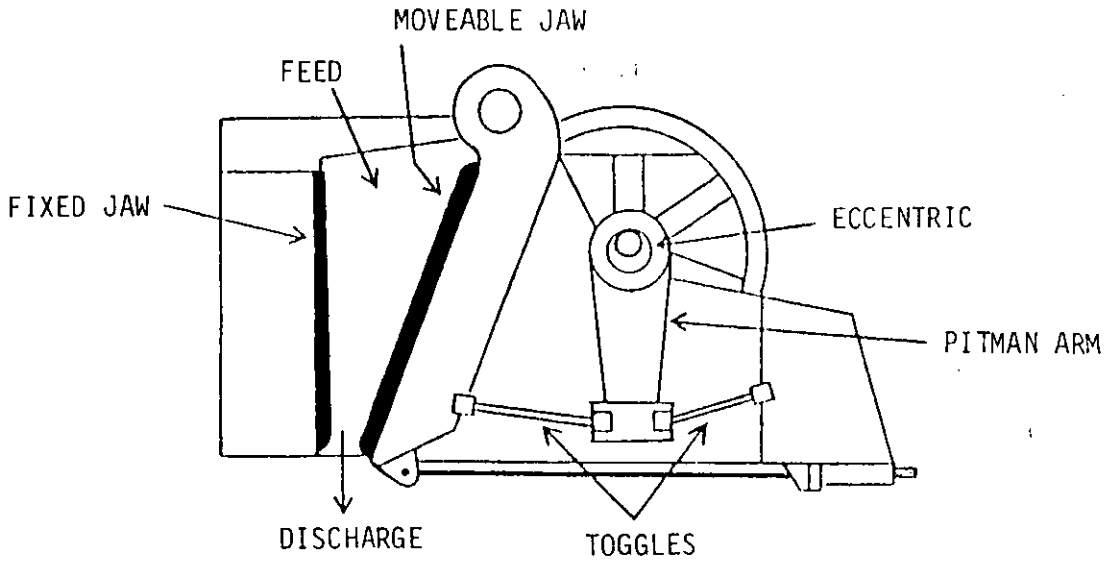

Figure 2.3 Double-toggle Jaw Crusher

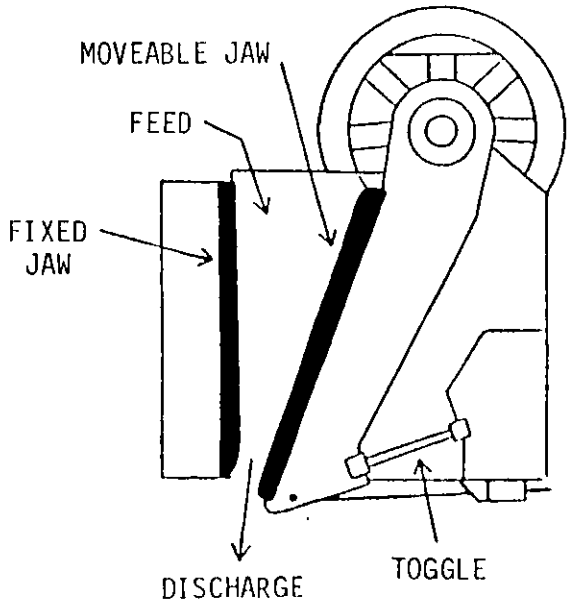

Figure 2.4 Single-toggle Jaw Crusher

TABLE 2.7 APPROXIMATE CAPACITIES OF JAW CRUSHERS[14]
(Discharge opening - closed)

Size [cm.(in.)]	Smallest discharge opening [cm.(in.)]	Capacity* [Mg/hr (tons/hr)]	Largest discharge opening [cm.(in.)]	Capacity [Mg/hr (tons/hr)]
91 x 61 (36 x 24)	>6 (3)	68 (75)	15.2 (6)	145 (160)
107 x 152 (42 x 60)	10.2 (4)	118 (130)	20.3 (8)	181 (200)
122 x 107 (48 x 42)	12.7 (5)	159 (175)	20.3 (8)	250 (275)
152 x 122 (60 x 48)	12.7 (5)	218 (240)	22.9 (9)	408 (450)
213 x 168 (84 x 66)	20.3 (8)	363 (400)	30.5 (12)	544 (600)

*Based on rock weighing 1600 kg/m^3 (100 lb/cu ft.)

TABLE 2.8 APPROXIMATE CAPACITIES OF GYRATORY CRUSHERS[15]
(Discharge opening - open)

Size [cm. (in.)]	Smallest discharge opening [cm.(in.)]	Capacity* [Mg/hr. (tons/hr)]	Largest discharge opening [cm.(in.)]	Capacity [Mg/hr. (tons/hr)]
76 (30)	10.2 (4)	181 (200)	16.5 (6.5)	408 (450)
91 (36)	11.4 (4.5)	336 (370)	17.8 (7)	544 (600)
107 (42)	12.7 (5)	381 (420)	19.1 (7.5)	635 (700)
122 (48)	14.0 (5.5)	680 (750)	22.9 (9)	1088 (1,200)
137 (54)	16.5 (6.5)	816 (900)	24.1 (9.5)	1451 (1,600)
152 (60)	17.8 (7)	1088 (1,200)	25.4 (10)	1814 (2,000)
183 (72)	22.9 (9)	1814 (2,000)	30.5 (12)	2721 (3,000)

*Based on rock weighing 1600 kg/m^3 (100 lb/cu ft.)

The pivoted spindle gyratory (Figure 2.5) has the crushing head mounted on a shaft that is suspended from above and free to pivot. The bottom of the shaft is seated in an eccentric sleeve which revolves, thus causing the crusher head to gyrate in a circular path within a stationary concave circular chamber. The crushing action is similar to that of a jaw crusher in that the crusher element reciprocates to and from a fixed crushing plate. Because some part of the crusher head is working at all times, the discharge from the gyratory is continuous rather than intermittent as in a jaw crusher. The crusher setting is determined by the wide-side opening at the discharge end and is adjusted by raising or lowering the crusher head.

Unlike the pivoted spindle gyratory, the fixed spindle gyratory has its crushing head mounted on an eccentric sleeve fitted over a fixed shaft. This produces a uniform crushing stroke from the top to the bottom of the crushing chamber.

For fine crushing, the gyratory is equipped with flatter heads and converted to a cone crusher (Figure 2.6). Commonly, in the lower section a parallel zone exists. This results in a larger discharge-to-feed area ratio which makes it extremely suitable for fine crushing at high capacity. Also, unlike regular gyratories, the cone crusher sizes at the closed side setting and not the open side (wide-side) setting. This assures that the material discharge will have been crushed at least once at the closed side setting. Cone crushers yield a cubical product and a high percentage of fines due to interparticle crushing (attrition). They are the most commonly used crusher in the industry for secondary and tertiary reduction. Table 2.9 presents performance data for typical cone crushers.

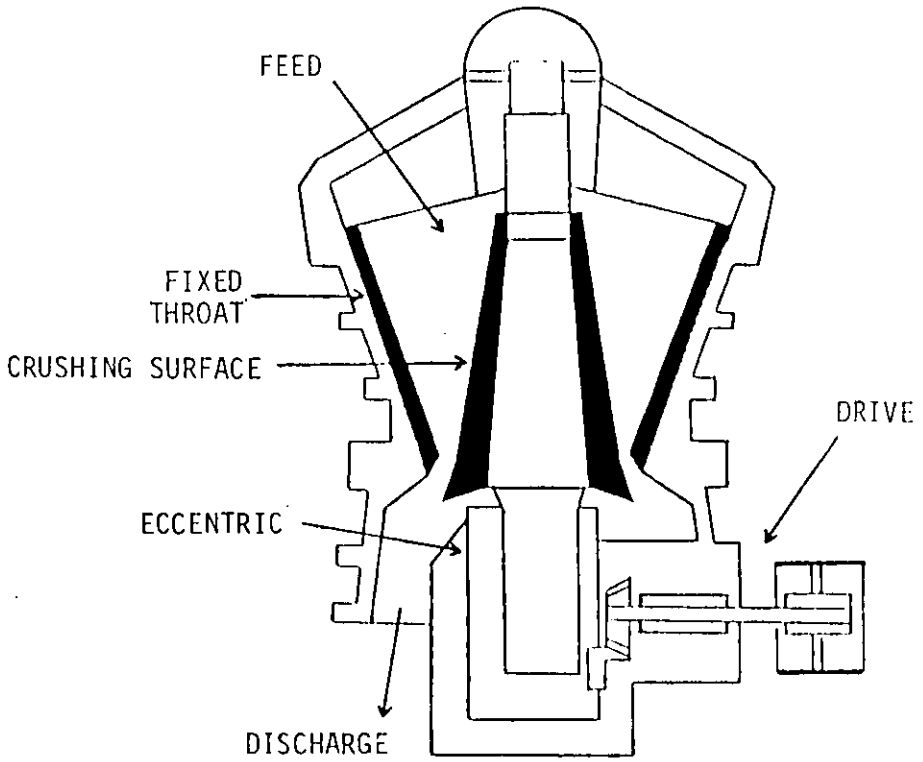

Figure 2.5 The Pivoted Spindle Gyratory

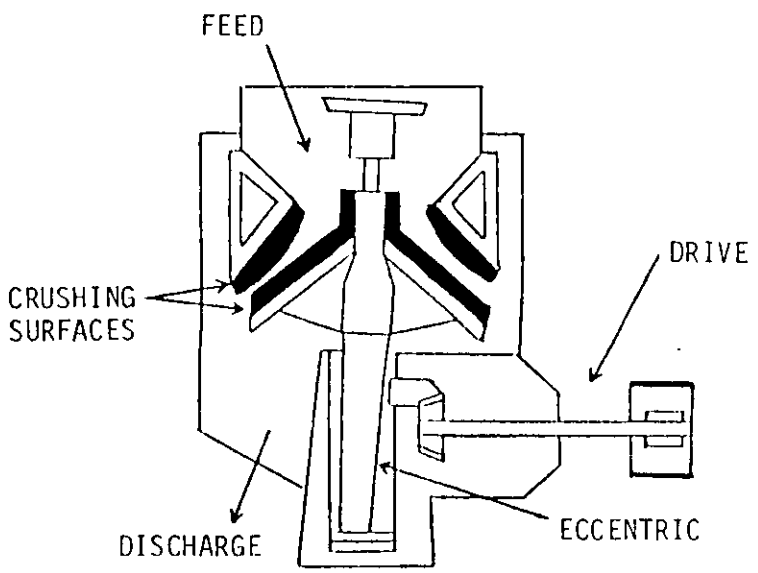

Figure 2.6 Cone Crusher

TABLE 2.9. PERFORMANCE DATA FOR CONE CRUSHERS[16]

Size of crusher (m (ft))	Capacity (Mg/hr (tons/hr)) discharge setting (cm (in))									
	1.0	(3/8)	1.3	(1/2)	1.9	(3/4)	2.5	(1)	3.8	(1.5)
0.6 (2)	18	(20)	23	(25)	23	(25)		-		-
0.9 (3)	32	(35)	36	(40)	64	(70)		-		-
1.2 (4)	54	(60)	73	(80)	109	(120)	136	(150)		-
1.7 (5.5)		-		-	181	(200)	250	(275)	308	(340)
2.1 (7)		-		-	229	(330)	408	(450)	544	(600)

Roll Crushers

These machines are utilized primarily at intermediate or final reduction stages and are often used at portable plants. There are essentially two types, the single-roll and the double-roll. As illustrated in Figure 2.7, the double-roll crusher consists of two heavy parallel rolls which are turned toward each other at the same speed. Roll speeds range from 50 to 300 rpm. Usually, one roll is fixed and the other set by springs. Typically, roll diameters range from 61 to 198 centimeters (24 to 78 inches) and have narrow face widths (about half the roll diameter). Rock particles are caught between the rolls and crushed almost totally by compression. Reduction ratios are limited and range from 3 or 4 to 1. These units produce few fines and no oversize. They are used especially for reducing hard rock to a final product ranging from 1/4 inch to 20 mesh.

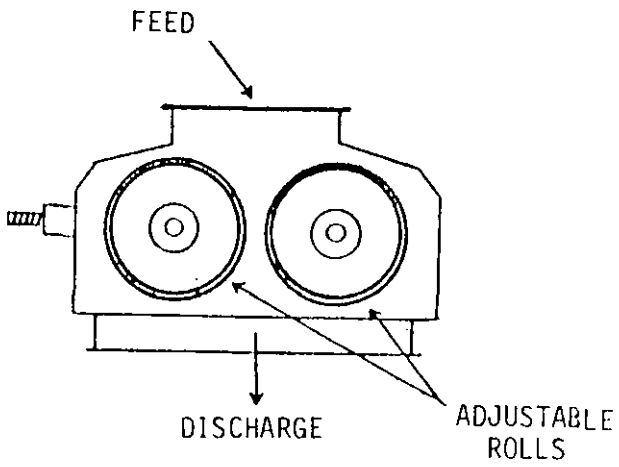

Figure 2.7 Double-roll Crusher

The working elements of a single-roll crusher include a toothed or knobbed roll and a curved crushing plate which may be corrugated or smooth. The crushing plate is generally hinged at the top and its setting is held by a spring at the bottom. A toothed-roll crusher is depicted in Figure 2.8. The feed caught between the roll and crushing plate is broken by a combination of compression, impact, and shear. These units may accept feed sizes up to 51 centimeters (20 inches) and have capacities up to 454 megagrams per hour (500 tons/hr). In contrast with the double-roll, the single-roll crusher is principally used for reducing soft materials.

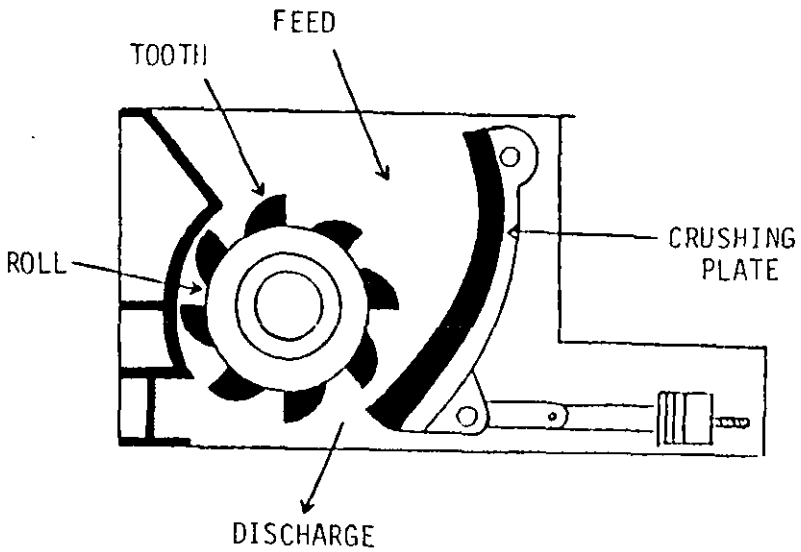

Figure 2.8 Single roll Crusher

Impact Crushers

Impact crushers, including hammermills and impactors, use the force of fast rotating massive impellers or hammers to strike and shatter free falling rock particles. These units have extremely high reduction and produce a cubical product spread over a wide range of particle sizes with a large proportion of fines.

A hammermill consists of a high-speed horizontal rotor with several rotor discs to which sets of swing hammers are attached (Figure 2.9). As rock particles are fed into the crushing chamber, they are impacted and shattered by the hammers which attain tangential speeds as high as 76 meters (250 feet) per second. The shattered rock then collides with a steel breaker plate and is fragmented even further. A cylindrical grating or screen positioned at the discharge opening restrains oversize material until it is reduced to a size small enough to pass the grate bars. Rotor speeds range from 250 to 1800 rpm and capacities can reach over 907 megagrams per hour (1,000 tons/hr). Product size is controlled by the rotor speed, the spacing between the grate bars, and by hammer length.

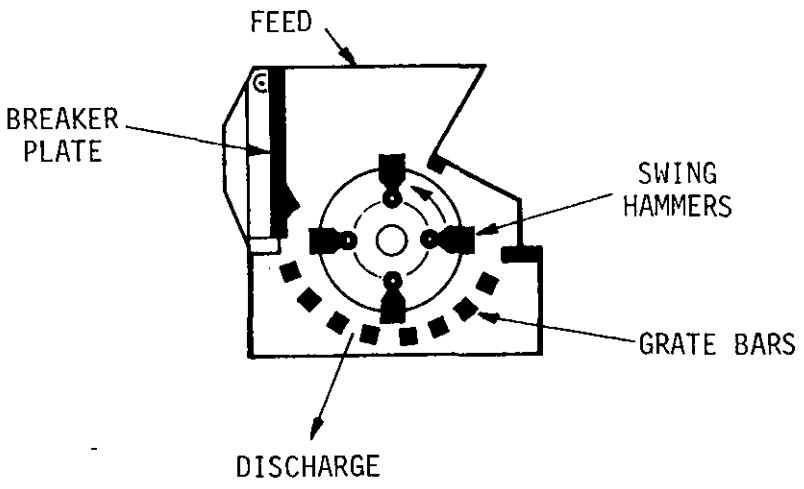

Figure 2.9 Hammermill

An impact breaker (Figure 2.10) is similar to a hammermill except that it has no grate or screen to act as a restraining member. Feed is broken by impact alone. Adjustable breaker bars are used instead of plates to reflect material back into the path of the impellers. Primary-reduction units are

available which can reduce quarry-run material at over 907 megagrams per hour (1,000 tons/hr) capacity to about 2.5 centimeters (1 inch). These units are not appropriate for hard abrasive materials, but are ideal for soft rocks.

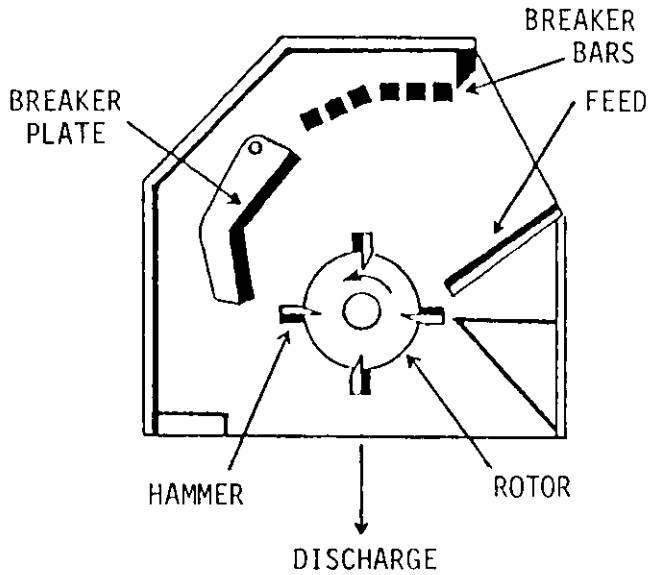

Figure 2.10 Impact Crusher

Sources of Emissions

The generation of particulate emissions is inherent in the crushing process. Emissions are most apparent at crusher feed and discharge points. Emissions are influenced predominantly by the type of rock processed, the moisture content of the rock, and the type of crusher used.

The most important elements influencing emissions from crushing equipment, as previously mentioned, are the type of rock and the moisture content of the mineral being crushed. The crushing mechanism employed has a substantial affect on the size reduction that a machine can achieve, the particle size distribution of the product (especially the proportion of fines produced), and the amount of mechanically induced energy which is imparted to fines.

Crushing units utilizing impaction rather than compression produce a larger proportion of fines as noted above. In addition to generating more fines, impact crushers also impart higher velocity to them as a result of the fan-like action produced by the fast, rotating hammers. Because of this and the high proportion of fines produced, impact crushers generate larger quantities of uncontrolled particulate emissions per ton of material processed than any other crusher type.

The level of uncontrolled emissions from jaw, gyratory, cone, and roll crushers closely parallels the reduction stage to which they are applied. Emissions increase progressively from primary to secondary to tertiary crushing. Factors other than the type of crushing mechanism (compression, impact) also affect emissions. In all likelihood, primary jaw crushers produce greater emissions than comparable gyratory crushers because of the bellows effect of the jaw, and because gyratory crushers are usually choke-fed to minimize the open spaces from which dust may be emitted. For subsequent reduction stages, cone crushers produce more fines as a result of attrition and consequently generate more dust.

2.5 SCREENING OPERATIONS

Screening is the process by which a mixture of rocks is separated according to size. In screening, material is dropped into a mesh surface with openings of desired size and separated into two fraction: undersize, which passes through the screen opening, and oversize, which is retained on the screen surface. When material is passed over and through multiple screening surfaces, it is separated into fractions of known particle size distribution. Screening surfaces may be contructed of metal bars, perforated or slotted metal plates, or woven wire cloth.

The capacity of a screen is primarily determined by the open area of the screening surface and the physical characteristics of the feed. It is usually expressed in tons of material per hour per square foot of screen area. Although screening may be performed wet or dry, dry screening is the more common.

Screening equipment commonly used in the non-metallic minerals industry includes grizzlies, shaking screens, vibrating screens, and revolving screens.

Grizzlies

Grizzlies consist of a set of uniformly-spaced bars, rods or rails. The bars may be horizontal or inclined and are usually wider in cross section at the top than the bottom. This prevents the clogging or wedging of stone particles between bars. The spacing between the bars ranges from 5 to 20 centimeters (2 to 8 inches). Bars are usually constructed of manganese steel or other highly abrasion-resistant material.

Grizzlies are primarily used to remove fines prior to primary crushing, thus reducing the load on the primary crusher. Grizzlies may be stationary cantilevered (fixed at one end with the discharge end free to vibrate) or mechanically vibrated. Vibrating grizzlies are simple bar grizzlies mounted on eccentrics (Figure 2-11). The entire assembly is moved forward and backward at about 100 strokes a minute, resulting in better flow through and across the grizzly surface.

Shaking Screens

The shaking screen consists of a rectangular frame with perforated plate or wire cloth screening surfaces, usually suspended by rods or cables and inclined at an angle of 14 degrees. The frame is driven with a reciprocating motion. The material to be screened is fed at the upper end and is advanced by the forward stroke of the screen while the finer particles pass through the openings. Generally, they are used for screening coarse material, 1.3 centimeters (1/2-inch) or larger.

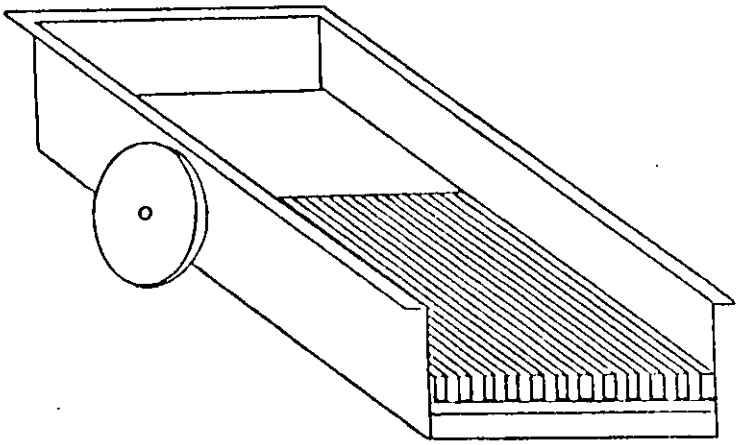

Figure 2.11 Vibrating Grizzly

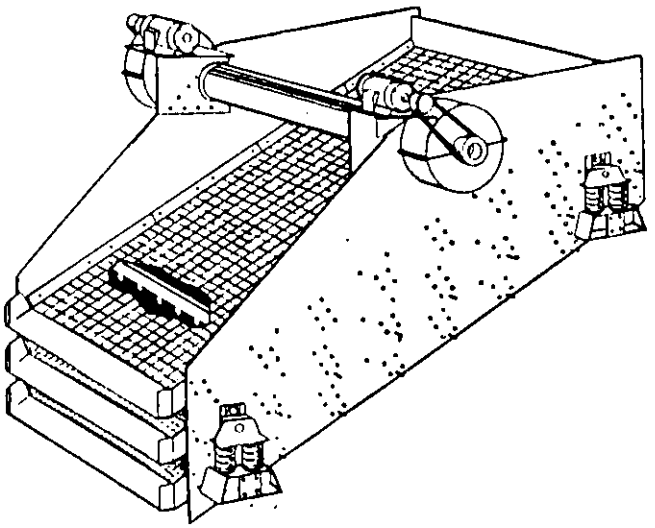

Figure 2.12 Vibrating Screen

Vibrating Screens

Where large capacity and high efficiency are desired, the vibrating screen has practically replaced all other screen types. It is by far the most commonly used screen type in the non-metallic minerals industry. A vibrating screen (Figure 2.12) essentially consists of an inclined flat or slightly convex screening surface which is rapidly vibrated in a plane normal or nearly normal to the screen surface. The screening motion is of small amplitude but high frequency, normally in excess of 3,000 cycles per minute. The vibrations may be generated either mechanically by means of an eccentric shaft, unbalanced fly wheel, cam and tappet assembly, or electrically by means of an electromagnet.

Mechanically-vibrated units are operated at about 1,200 to 1,800 rpm and at amplitudes of about 0.3 to 1.3 centimeters (1/8 to 1/2 inch). Electrically vibrated screens are available in standard sizes from 30 to 180 centimeters (12 inches to 6 feet) wide and 0.76 to 6.1 meters (2-1/2 to 20 feet) long. A complete screening unit may have one, two or three decks.

Revolving Screens

This screen type consists of an inclined cylindrical frame around which is wrapped a screening surface of wire cloth or perforated plate. Feed material is delivered at the upper end and, as the screen is rotated, undersized material passes through the screen openings while the oversized is discharged at the lower end. Revolving screens are available up to 1.2 meters (4 feet) in diameter and usually run at 15 to 20 rpm.[17]

Source of Emissions

Dust is emitted from screening operations as a result of the agitation of dry material. The level of uncontrolled emissions depends on the quantity of fine particles contained in the material, the moisture content of the material, and the type of screening equipment. Generally, the screening of fines produces higher emissions than the screening of coarse materials. Also, screens agitated at large amplitudes and high frequency emit more dust than those operated at small amplitudes and low frequencies.

2.6 MATERIAL HANDLING

Material handling devices are used to convey materials from one point to another. The most common include feeders, belt conveyors, bucket elevators, screw conveyors, and pneumatic systems.

Feeders

Feeders are relatively short, heavy-duty conveyance devices used to receive material and deliver it to process units, especially crushers, at a uniformly regulated rate. The various types used are the apron, belt, reciprocating plate, vibrating, and wobbler feeders.

Apron feeders are composed of overlapping metal pans or aprons which are hinged or linked by chains to form an endless conveyor supported by rollers and spaced between a head and tail assembly. These feeders are constructed to withstand high impact and abrasion and are available in various widths (18 to 27 inches) and lengths.

Belt feeders are essentially short, heavy duty belt conveyors equipped with closely spaced support rollers. Adjustable gates are used to regulate feed rates. Belt feeders are available in 46 to 122 centimeter (18 to 48 inch) widths and 0.9 to 3.7 meter (3 to 12 foot) lengths and are operated at speeds of 12.2 to 30.5 meters (40 to 100 feet) per minute.

Reciprocating plate feeders consist of a heavy-duty horizontal plate which is driven in a reciprocating motion causing material to move forward at a uniform rate. The feed rate is controlled by adjusting the frequency and length of the stroke.

Vibrating feeders operate at a relatively high frequency and low amplitude. Their feed rate is controlled by the slope of the feeder bed and the amplitude of the vibrations. These feeders are available in a variety of sizes, capacities, and drives. When combined with a grizzly, both scalping and feeding functions are performed.

Wobbler feeders also perform the dual task of scalping and feeding. These units consist of a series of closely spaced elliptical bars which are mechanically rotated, causing oversize material to tumble forward to the discharge and undersize material to pass through the spaces. The feed rate is controlled by the bar spacing and the speed of rotation.

Belt Conveyors

Belt conveyors are the most widely used means of transporting, elevating and handling materials in the non-metallic minerals industry. As illustrated in Figure 2.13, belt conveyors consist of an endless belt which is carried on a series of idlers usually arranged so that the belt forms a trough. The belt is stretched between a drive or head pulley and a tail pulley. Although belts may be constructed of other material, reinforced rubber is the most commonly used. Belt widths may range from 36 to 152 centimeters (14 to 60 inches), with 76 to 91 centimeter (30 to 36 inch) belts the most common. Normal operating speeds may range from 60 to 120 meters per minute (200 to 400 feet/minute). Depending on the belt speed, belt width, and rock density, load capacities may be in excess of 1360 megagrams (1,500 tons) per hour.

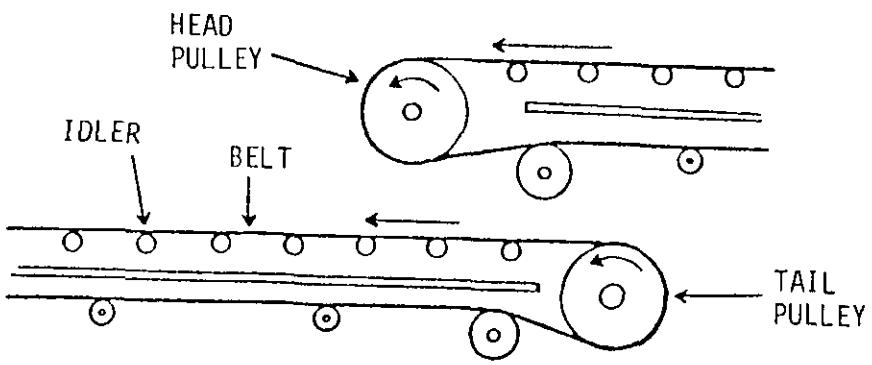

Figure 2.13 Conveyor Belt Transfer Point

Elevators

Bucket elevators are utilized where substantial elevation is required within a limited space. They consist of a head and foot assembly which supports and drives an endless single or double strand chain or belt to which buckets are attached. Figure 2.14 depicts the three types most commonly used: the high-speed centrifugal-discharge, the slow speed positive or perfect-discharge, and the continuous-bucket elevator.

The centrifugal-discharge elevator has a single strand of chain or belt to which the spaced buckets are attached. As the buckets round the tail pulley, which is housed within a suitable curved boot, the buckets scoop up their load and elevate it to the point of discharge. The buckets are so spaced so that at discharge, the material is thrown out by the centrifugal action of the bucket rounding the head pulley. The positive-discharge type also utilizes spaced buckets but differs from the centrifugal type in that it has a double-strand chain and a different discharge mechanism. An additional sprocket, set below the head pulley, effectively bends the strands back under the pulley causing the bucket to be totally inverted resulting in a positive discharge.

The continuous-bucket elevator utilizes closely-spaced buckets attached to a single-or double-strand belt or chain. Material is loaded directly into the buckets during ascent and is discharged gently as a result of using the back of the precluding bucket as a discharge chute.

Screw Conveyors

Screw conveyors are comprised of a steel shaft with a spiral or helical fin which, when rotated, pushes material along a trough. Since these conveyors are usually used with wet classification, no significant emission problem is experienced.

Pneumatic Conveyors

Pneumatic conveyors are comprised of tubes or ducts through which material is conveyed. Pneumatic conveyors are divided into two classes termed by their operating principles: pressure systems and vacuum (suction) systems.

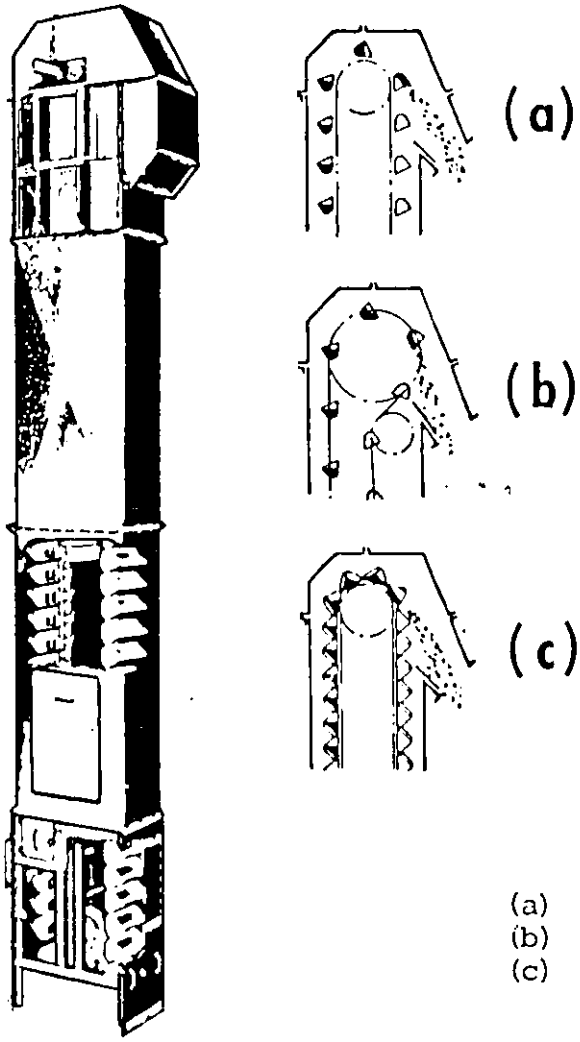

LEGEND

(a) centrifugal discharge
(b) positive discharge
(c) continuous discharge

Figure 2.14 Bucket Elevator Types

Pressure systems are further classified into low pressure and high pressure types, and vacuum systems into low-, medium-, and high-vacuum types. Pressure and vacuum systems occasionally are used in combination for special requirements.

Pressure systems operate at pressure obtainable from a fan (low-pressure systems) or a compressed air system (high-pressure systems). Normally, the airstream functions in a 20 to 31 centimeters (8 to 12 inches) diameter pipeline. Into this line, material is fed from a hopper or other device at controlled rates. The airstream immediately suspends this material and conveys it to a cyclone-type or filter-type collector for deposit. Conveying air escapes via the cyclone vent or through the filter.

Vacuum systems offer the advantage of clean, efficient pickup from railcars, trucks or bins for unloading or in-plant conveying operations. Cyclone receivers or combination receiver-filters are used at the terminal of the system to separate the material being conveyed from the air. Below the receiver, either a rotary feeder or gatelock (trap door feeder) is employed as a discharge air lock. Positive displacement blowers are used as exhausters to provide the necessary conveying air at the operating vacuum. Generally, the vacuum system is most applicable where the feed-in point must be flexible, such as unloading railroad cars, barges, ships, or reclaiming material from open warehouse storage, or where it is desirable to pick up material from a multiplicity of stations.

Source of Emissions

Particulates may be emitted from any of the material handling and transfer operations. As with screening, the level of uncontrolled emissions depends on the material being handled, the size of the material handled, the degree of agitation of the material, and the moisture content of the material. Perhaps the largest emissions occur at conveyor belt transfer points. Depending on the conveyor belt speed and the free fall distance between transfer points, substantial emissions may be generated.

2.7 GRINDING OPERATION

Grinding is a further step in the reduction of material to particle sizes smaller than those attainable by crushers. Because the material to be treated has already been reduced to small sizes, and the force to be applied to each particle is comparatively small, the machines used in grinding are of a different type, and may operate on a different principle, from those used in more coarse crushing.

Many types of grinding mills are manufactured for use by various industries. The principal types of mills used are: (1) hammer, (2) roller, (3) rod, (4) pebble and ball, and (5) fluid energy. Each of these types of mills is discussed separately below.

Hammermills

A hammermill consists of a high-speed horizontal rotor with several rotor discs, to which sets of swing hammers are attached. As rock particles are fed into the grinding chamber, they are impacted and shattered by the hammers which attain peripheral speeds greater than 4,572 meters per minute (250 feet per second). The shattered rock then collides with a steel breaker plate and is fragmented even further. A cylindrical grating or screen positioned at the discharge opening restrains oversize material until it is reduced to a size small enough to pass between the grate bars. Product size is controlled by the rotor speed, the spacing between the grate bars, and by hammer length. These mills are used for nonabrasive materials and can accomplish a size reduction of up to 12:1.

Roller Mill

The roller mill, also known as a Raymond Roller Mill, with its integral whizzer separator, can produce ground material ranging from 20 mesh to 325 mesh or finer. The material is ground by rollers that travel along the inside of a horizontal stationary ring. The rollers swing outward by centrifugal force, and trap the material between them and the ring. The material is swept out of the mill by a stream of air to a whizzer separator, located directly on top of the mill, where the oversize is separated and dropped

back for further grinding while the desired fines pass up through the whizzer blades into the duct leading to the air separator (cyclone). A typical roller mill is shown in Figure 2.15.

Rod Mill

The rod mill is generally considered as a granular grinding unit, principally for handling a maximum feed size of 2 to 4 centimeters (1 to 2 inches), and grinding to a maximum of 65 mesh. It is normally used in a closed circuit with a sizing device, such as a classifier or screen, and for wet or dry grinding. It will grind with the minimum of the finer sizes, such as 100 or 200 mesh, and will handle relatively high moisture material without packing.

The mill in its general form consists of a horizontal, slow-speed rotating, cylindrical drum. The grinding media consists of a charge of steel rods, slightly shorter than the mill's inside length and from 5 to 13 centimeters (2 inches to 5 inches) in diameter. The rods roll freely inside the drum during its rotation to give the grinding action desired.

Pebble and Ball Mills

The simplest form of a ball mill is a cylindrical, horizontal, slow-speed rotating drum containing a mass of balls as grinding media. When other types of grinding media such as a flint or various ceramic pebbles are used, it is known as a pebble mill. The ball mill uses steel, flint, porcelain, or cast iron balls. A typical ball mill is shown in Figure 2.16.

The diameter of balls or pebbles as the initial charge in a mill is determined by the size of the feed material and the desired fineness of the product. Usually the larger diameter ranges are used for preliminary grinding and the smaller for final grinding. Ball mills reduce the size of the feed mostly by impact. These grinders normally have a speed of 10 to 40 revolutions per minute. If the shell rotates too fast, centrifugal force keeps the balls against the shell and minimal grinding occurs.

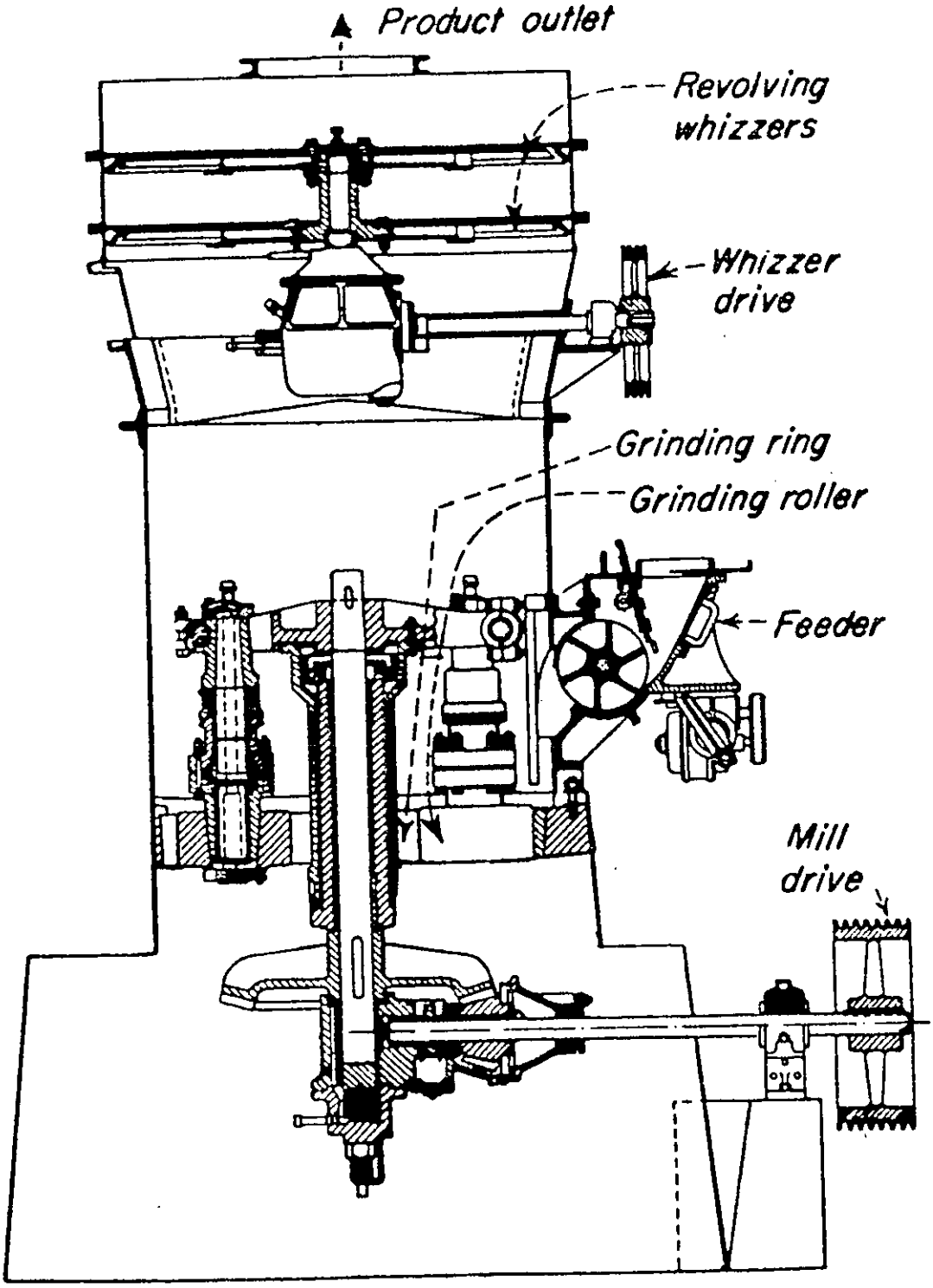

Figure 2.15 Roller Mill

Fluid Energy Mills

When the desired material size is in the range of 1 to 20 microns, an ultrafine grinder such as the fluid energy mill is required. A typical fluid energy mill is shown in Figure 2.17. In this type of mill, the particles are suspended and conveyed by a high velocity gas stream in a circular or elliptical path. Size reduction is caused by impaction and rubbing against mill walls, and by interparticle attrition. Classification of the particles takes place at the upper bend of the loop shown in Figure 2.17. Internal classification occurs because the smaller particles are carried through the outlet by the gas stream while the larger particles are thrown against the outer wall by centrifugal force. Product size can be varied by changing the gas velocity through the grinder.

Fluid energy mills can normally reduce up to 0.91 megagrams/hr (1 ton/hr) of solids from 0.149 mm (100 mesh) to particles averaging 1.2 to 10 microns in diameter. Typical gas requirements are 0.45 and 1.8 kg (1 to 4 pounds) of steam or 2.7 to 4.1 kg (6 to 9 pounds) of air admitted at about 0.07 kPa (100 psig) per 0.45 kg (1 pound) of product. The grinding chambers are about 2.5 to 20 cm (1 to 8 inches) in diameter and the equipment is 1.2 to 2.4 meters (4 to 8 feet) high.

Source of Emissions

As with crushers, the most important element influencing emissions from grinding mills is the reduction mechanism employed, compression or impaction. Grinding mills generally utilize impaction rather than compression. Reduction by impaction will produce a larger proportion of fines. Particulate emissions are generated from grinding mills at the grinder's inlet and outlet. Gravity type grinding mills accept feed from a conveyor and discharge product into a screen or classifier or onto a conveyor. These transfer points are the source of particulate emissions. The outlet has the highest emissions potential because of the finer material. Air-swept mills include an air conveying system and an air separator, a classifier, or both. The air separator and classifier are generally cyclone collectors. In some systems, the air just conveys the material to a separator for deposit into a storage

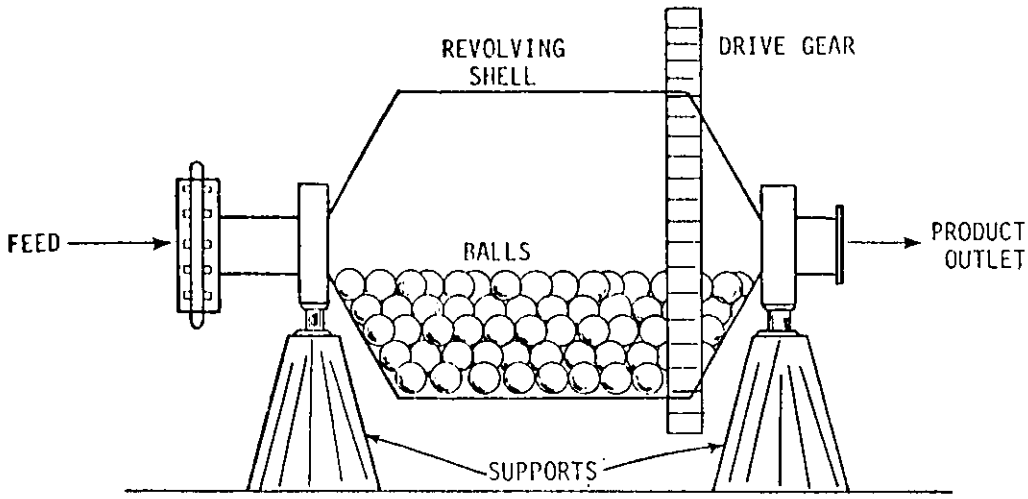

Figure 2.16 Ball Mill

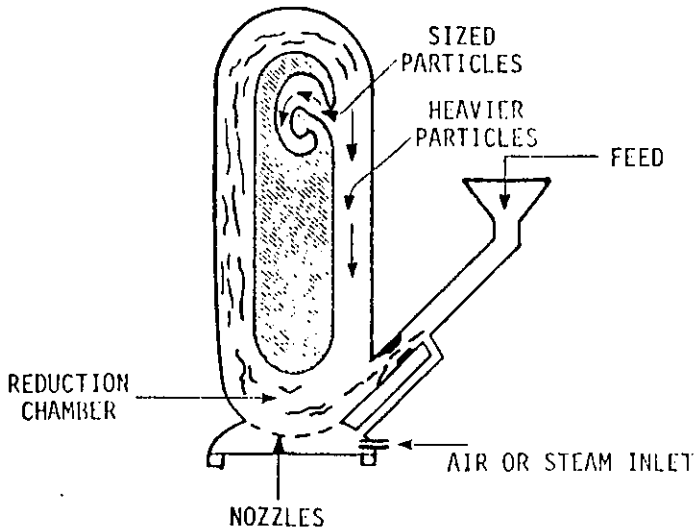

Figure 2.17 Fluid-energy Mill

bin with the conveying air escaping via the cyclone vent. In other grinding systems, the air is continuously recirculated. Maintaining this circulating air system under suction keeps the mill dustless in operation, and any surplus air drawn into the system due to the suction created by the fan is released through a vent. In both cases the vent gases will contain a certain amount of particulate matter.

2.8 SEPARATING AND CLASSIFYING

Mechanical air separators of the centrifugal type cover a distinct field and find wide acceptance for the classification of dry materials in a relatively fine state of subdivision. In commercial practice the separator may be said to begin where the impact of vibrating screens leave off,[18] extending from about 40 to 60 mesh down.

Briefly stated, the selective action of the centrifugal separator is the result of an ascending air current generated within the machine by means of a fan, which lifts the finer particles against the combined effect of centrifugal force and gravity. In operation the feed opening allows the material to drop on the lower or distributing plate where it is spread and thrown off by centrifugal force, the larger and heavier particles being projected against an inner casing, while the smaller and lighter particles are picked up by the ascending air current created by the fan. These fines are carried over into an outer cone and deposited. Concurrently, the rejected coarse material drops into the inner cone, passes out through a spout, and is recycled back to the grinding mill.

The air, after dropping the major portion of its burden, is either recirculated back to the grinding mill or vented. In the case of the recirculated air, a small amount of extraneous air is entrained in the feed and frequently builds up pressure in the separator, in which case the excess air may be vented off. Both vent gases are a source of particulate matter.

2.9 BAGGING AND BULK LOADING OPERATIONS

In the non-metallic minerals industry, the valve-type paper bag, either sewn or pasted together, is widely used for shipping fine materials. The valve bag is "factory closed," that is, the top and bottom are closed either

by sewing or by pasting, and a single small opening is left on one corner. Materials are discharged into the bag through the valve. The valve closes automatically due to the internal pressure of the contents of the bag as soon as it is filled.

The valve type bag is filled by means of a packing machine designed specifically for this purpose. The material enters the bag through a nozzle inserted in the valve opening, and the valve closes automatically when the filling is completed.

Bagging operations are a source of particulate emissions. Dust is emitted during the final stages of filling when dust-laden air is forced out of the bag. The fugitive emissions due to bagging operation are generally localized in the area of the bagging machine.

Fine product materials that are not bagged for shipment are either bulk-loaded in tank trucks or enclosed railroad cars. The usual method of loading is gravity feeding through plastic or fabric sleeves. Bulk loading of fine material is a source of particulate because, as in the bagging operation, dust-laden air is forced out of the truck or railroad car during the loading operation.

2.10 WASHING

To meet specifications, some aggregate products, such as concrete aggregate, require washing to remove fines. Although a variety of equipment is available, washing screens are generally used. A washing screen is a standard, inclined, vibrating screen with high-pressure water-spray bars installed over the screening surface. Rocks passing over the screen are washed and classified. Because it is a wet process, it essentially produces no particulate emissions.

2.11 PORTABLE PLANTS [19]

A portable plant may consist of a single chassis on which one or several processing units may be mounted; or it may consist of a combination of chassis on which various types of units are mounted to provide a sequence of operations such as feeding, crushing, screening, sizing, washing, and loading. The processing steps for crushed and broken stone and sand and gravel are the same in both fixed and portable plants. In a portable plant, however, the processing units are squeezed into a very restricted space. Thus, the entire plant can be readily moved from one quarry site to another.

Portable plants come in various designs and are adaptable to practically any process conditions and product specifications. They may be grouped into three categories: simple, duplex, and combination. In the simple portable plant a single screen receives material from a feed conveyor. The oversized material is scalped to a jaw crusher, where it is reduced before it is returned to the feed conveyor. The material that passes through the scalping screen is the lone product that is collected in a truck or bin directly underneath the screen.

Additional product sizes may be produced by adding a secondary crusher and modifying the screening arrangement. This grouping that is commonly mounted on a single chassis is known as a duplex plant. As shown in Figure 2-18, pit material is fed to the top of a triple-deck, inclined, vibrating screen capable of producing three product sizes and oversize which is reduced by a jaw crusher. Material that is passed to the second screening deck is delivered to a double- or triple-roll crusher for secondary reduction. The output from both crushers is conveyed to a rotating drum-type elevator that returns the material to the feed conveyor. Material passing through the second screen to the third is classified by size, collected in bins, and conveyed to storage piles. Combination plants have two or more chassis with various combinations of processing units.

Portable plants may be used as auxiliary units to large stationary primary crushers in quarries that produce pit material too large for the portable plant to handle alone. The ability of some portable plants, however, is too limited to accept the feed from the larger primary crushers. Therefore, a secondary or intermediate crusher, which may also be a portable unit, is required to take full advantage of the capability of the primary crusher.

Conversely, some process conditions preclude the need for an intermediate crusher, and the flexibility of individual portable processing units allows the user to meet his product requirements simply by arranging the units in the most efficient combination.

Emissions from each processing unit in a portable plant are the same as those from a unit of equivalent size in a stationary plant.

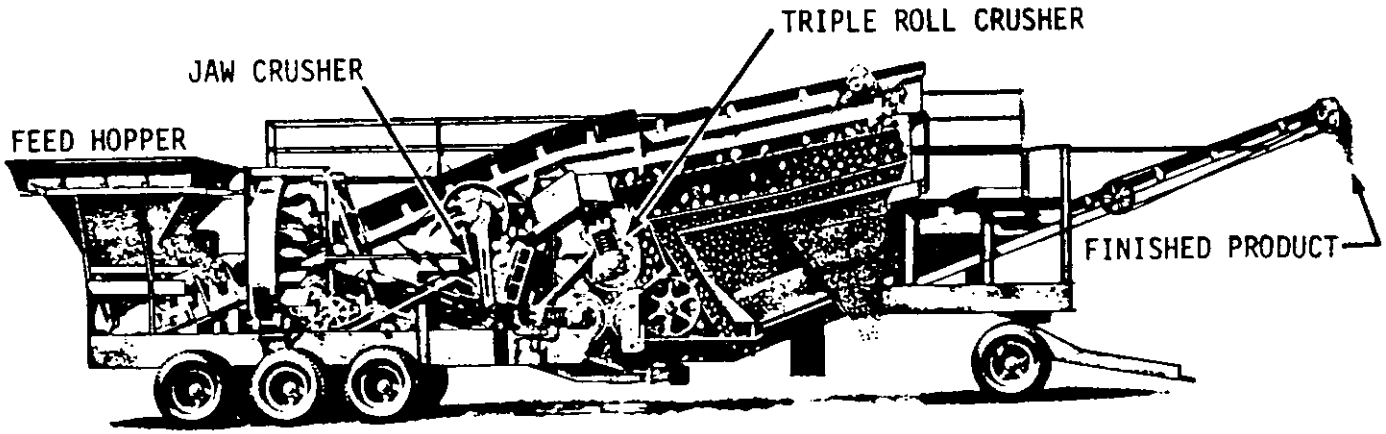

Figure 2.18 Portable Plant (courtesy of Pit and Quarry Handbook)

REFERENCES

1. Minerals Yearbook (1980), Volume I, Bureau of Mines.

2. Mineral Facts and Problems, 1975 Edition, Bureau of Mines.

3. Characterization of Particulate Emissions from the Stone-Processing Industry, Research Triangle Institute, EPA Contract No. 68-02-0607, May 1975, p. 57.

4. Source Testing Report - Georgia Kaolin Company, Dry Branch, Georgia. Prepared by Roy F. Weston, Incorporated, EPA Report No. 78-NMM-8.

5. Source Testing Report - International Minerals and Chemical Company, Spruce Pine, North Carolina. Prepared by Clayton Environmental Consultants, Incorporated, EPA Report No. 76-NMM-1.

6. Source Testing Report - Englehard Minerals and Chemicals Corporation, Attapulgus, Georgia. Prepared by Roy F. Weston, Incorporated. EPA Report No. 77-NMM-6.

7. Source Testing Report - Pfizer, Incorporated, Victorville, California. Prepared by Pacific Environmental Services, Incorporated. EPA Report No. 77-NMM-5.

8. Source Testing Report - Flintkote Company, Blue Diamond, Nevada. Prepared by Midwest Research Institute, EPA Report No. 76-NMM-3.

9. Source Testing Report - Eastern Magnesia Talc Company, Johnson, Vermont. Prepared by Clayton Environmental Consultants, Incorporated, EPA Report No. 76-NMM-4.

10. Source Testing Report - Arizona Portland Cement, Rillito, Arizona. Prepared by Valentine, Fisher & Tomlinson Consulting Engineers, EPA Report No. 74-STN-1.

11. Source Testing Report - Ferrante and Sons, Bernardsville, New Jersey. Prepared by York Research Corporation, EPA Report No. 75-STN-6.

12. Source Testing Report - J. M. Brenner Company, Lancaster, Pennsylvania. Prepared by Clayton Environmental Consultants, Incorporated, EPA Report No. 75-STN-7.

REFERENCES (continued)

13. Pit and Quarry Handbook and Purchasing Guide. 63rd Edition, Pit and Quarry Publications, Incorporated, Chicago, 1979, p. B-17.

14. Reference 13.

15. Reference 13.

16. Perry, Robert H. (editor), Chemical Engineers Handbook, 5th Edition, McGraw-Hill, New York, 1973, p. 8-21.

17. Reference 13, p. B-144.

18. Reference 13, p. B-73.

19. Rundquist, W. A. The Portable Plant...A Versatile, Hard-Working Tool. Pit and Quarry. May 1974.

3.0 EMISSION CONTROL TECHNIQUES

The emission control techniques that are generally applicable for the control of particulate emissions from fugitive dust and fugitive process sources at non-metallic mineral processing plants are discussed in this chapter. Sources of fugitive dust emissions include drilling, blasting, mine loading, haul roads, conveyor systems, stockpiles, and wastepiles. Sources of fugitive process emissions include crushers, screens, grinders, storage bins, conveyor transfer points, product loading, and product bagging. The control techniques discussed in this chapter are applicable for the control of particulate emissions from both fixed mineral processing plants and portable mineral processing plants.

The diversity of the particulate emission sources involved in mining and processing non-metallic minerals requires use of a variety of emission control techniques. Dust suppression techniques, designed to prevent particulate matter from becoming airborne, are applicable to both fugitive dust and fugitive process sources. Wet dust suppression techniques are usually used in the construction aggregate industry. Where particulate emissions can be contained and captured, dry collection systems may be used. Emission sources and applicable emission control techniques are listed in Table 3.1.

3.1 CONTROL OF FUGITIVE DUST SOURCES[1]

3.1.1 Drilling Operations

The two methods that are generally applicable for the control of fugitive dust emissions from drilling operations are water injection and dry collection systems. Water injection is a technique in which water or water plus a surfactant (wetting agent) is combined with the compressed air stream that flushes the drill cuttings from the drill hole. The injection of fluid into the air stream produces a mist that dampens the drill cuttings and causes them to agglomerate. Most of the dampened drill cuttings will settle out at the drill collar when blown from the drill hole.

TABLE 3.1. PARTICULATE EMISSION SOURCES AND APPLICABLE EMISSION CONTROL TECHNIQUES

Fugitive dust		Fugitive process	
Emission source	Applicable emission control technique	Emission source	Applicable emission control technique
Drilling	a. Injection of water or water plus surfactant b. Dry collection system	Crushers	a. Wet dust suppression b. Dry collection system
Blasting	a. Good blasting practices	Screens	Same as crushers
Quarry loading	a. Wetting with water or water plus surfactant	Grinders	Same as crushers
Haul roads	a. Wetting with water or water plus surfactant b. Soil stabilization c. Paving d. Traffic control	Storage bins	Same as crushers
Conveyor systems	a. Coverings b. Wet dust suppression	Conveyor transfer points	Same as crushers
Stockpiles	a. Stone ladders b. Stacker conveyors c. Water sprays at conveyor discharge	Product loading	Same as crushers
Windblown dust from stockpiles	a. Wetting with water or water plus surfactant b. Coverings c. Windbreaks	Product bagging	a. Dry collection system

The addition of a surfactant increases the wetting ability of untreated water by reducing its surface tension.[2] This reduces the amount of water required for effective control. The amount of solution required is dependent upon the size of the hole, the drilling rate, and the type of material being drilled. A typical injection rate for an 8.9 centimeters (3.5 inches) diameter hole is approximately 26.6 liters (7 gallons) per hour. The effective application of water injection to a drilling operation should eliminate visible emissions.

Dry collection systems are also used to control emissions from drilling operations. A shroud or hood encircles the drill rod at the drill hole collar. A vacuum captures emissions and vents them through a flexible duct to a control device for collection. The control devices most commonly used are cyclones or baghouses preceded by a settling chamber. Cyclone collection efficiencies usually are not high. Although designed for the collection of coarse-to-medium-sized particles (15 to 40 microns or larger), cyclones are generally unsuitable for fine particulates (10 microns and smaller). Cyclone collection efficiencies seldom exceed 80 percent in the smaller particulate size range. However, baghouses exhibit collection efficiencies in excess of 99 percent through the submicron particle range.[3] Air volumes required for effective control may range from 15 to 45 cubic meters (500 to 1500 cubic feet) per minute depending on the type of rock drilled, drill hole size, and penetration rate. A rotary drill equipped with a baghouse was tested for visible emissions from the capture system and the baghouse outlet. For more than 75 percent of the time, the opacity was less than 20 percent at the capture point. Readings at the baghouse ranged from 0 to 5 percent.

3.1.2 Blasting Operations

No effective method is available for controlling particulate emissions from blasting. Good blasting practices can minimize noise, vibration, and air shock. Multidelay detonation devices, which detonate the explosive charges in millisecond time intervals, can reduce these effects. Scheduling blasting operations so that they occur only during conditions of low wind and low inversion potential can substantially reduce the impact of fugitive dust emissions from this source.

3.1.3 Quarry Loading Operations

Particulate emissions from the loading of broken rock by loaders or shovels are difficult to control. However, some control may be attained by using water trucks equipped with hoses or portable watering systems to wet down the piles prior to loading.

3.1.4 Haul Roads

A large portion of the fugitive dust generated by quarrying operations results from the transportation of material from the quarry to the processing plant over unpaved haul roads.[4] Emissions from hauling operations are a function of the condition of the road surface and the volume and speed of vehicular traffic. Consequently, control measures include methods to improve road surfaces or suppress fugitive dust and operational changes to minimize the effect of vehicular traffic.

Various treatment methods applied to control fugitive dust emissions from haul roads include watering, surface treatment with chemical dust suppressants, soil stabilization, and paving. The most common method is watering. Water is applied to the road in a controlled manner by operators of water trucks equipped with either gravity-fed spray bars or pressure sprays. The amount of water required, frequency of application, and effectiveness are dependent on climatic conditions, the conditions of the roadbed, and vehicular traffic.

Other haul road fugitive dust suppression treatments include the application of hygroscopic chemicals (substances that absorb moisture) such as organic sulfonates and calcium chloride. When spread directly over unpaved road surfaces, these chemicals dissolve in the moisture they adsorb and form a clear liquid that is resistant to evaporation. Consequently, they are most effective in areas of relatively high humidity. Because the chemicals are water soluble, however, they may have to be applied repeatedly in areas with frequent rainfall.

An alternative to surface treatment is soil stabilization. Stabilizers usually consist of a water dilutable emulsion of either synthetic or petroleum resins that act as an adhesive or binder. Quarry operators in California and Arizona report substantial success with one such agent.[6,7] This product is a nonvolatile emulsion containing about 60 percent natural petroleum resins and 40 percent wetting solution. Its use in the initial treatment of new haul roads depends on the characteristics of the road bed and the penetration depth required. For most roads, an effective dilution is one part stabilizer to four parts of water (1:4) applied at a rate of about 9.5 to 23.8 liters per square meter (2 to 5 gallons per square yard). Once the road has been stabilized by repeated application and compaction of vehicle traffic, the dilution may be increased to 1:7 to 1:20 for daily maintenance. Usually, one pass per day is considered sufficient for effective dust control.

Paving is probably the most effective means for reducing fugitive dust emissions from haul roads. Initial paving costs may exceed $23,400 per kilometer ($27,700 per mile) of haul road for a 7.7 centimeters (3 inches) thick bituminous surface. Maintenance and repair may be relatively high due to the damage caused by heavy vehicle traffic.[8] In addition, the paved roads would have to be periodically vacuumed or cleaned due to accumulation of soil and dust on the roadway.

Operational measures that would reduce fugitive dust emissions include the reduction of traffic volume and control of traffic speed. Replacing smaller haul vehicles with larger capacity units would minimize the number of trips required and should reduce the total fugitive dust emissions generated per megagram (ton) of material hauled. A stringent program to control traffic speed would also reduce dust emissions. According to a study of emissions from conventional vehicle traffic on unpaved roads, a reduction in the average vehicle speed from 48 kilometers (30 miles) per hour to 40, 32, and 24 kilometers (25, 20, and 15 miles) per hour reduced emissions by 25, 33, and 40 percent, respectively. Although the situations may not be completely analogous, it can be concluded that an enforced speed limit of 8 to 16 kilometers (5 to 10 miles) per hour would reduce fugitive dust emissions from quarry vehicle traffic.

3.1.5 Conveyor Systems

Fugitive dust emissions are generated by the wind blowing across the material being transferred from one process operation to another on nonenclosed conveyor systems. The two methods available for the control of fugitive dust emissions from conveyor systems are coverings or wet dust suppression. Coverings can consist of enclosing the entire conveyor system with sheet metal or the use of plastic or canvas sheets which block the action of the wind across the conveyor system. The use of wet dust suppression would require the installation of spray bars at various intervals along the conveyor systems.

3.1.6 Stockpiles

Fugitive dust emissions, as judged by visible emissions, may result during the formation of new aggregate piles and the erosion of previously formed piles. During the formation of stockpiles by stacking conveyors, particulate emissions are generated by wind blowing across the streams of falling stone and segregating fine particles from coarse particles. Emissions are also produced when the falling stone impacts on the piles. Control methods include wet dust suppression and devices designed to minimize the free-fall distance to which the material is subjected, thus lessening its exposure to wind and reducing emissions generated upon impact.

The wet dust-suppression effect is carried over at plants that spray the discharge from the final crushing or screening operations, after which no new surfaces are created nor the material tumbled. Control devices that are applied include stone ladders, telescopic chutes, and hinged-boom stacker conveyors. A stone ladder simply consists of a section of vertical pipe into which stone from the stacking conveyor is discharged. At different levels the pipe has square or rectangular openings through which the material may flow. This reduces the effective free-fall distance and affords wind protection. Another approach is the telescopic chute. Material is discharged to a retractable chute and falls freely to the top of the pile. As the height of the stockpile increases or decreases, the chute is

gradually raised or lowered accordingly. A similar approach is provided by a stacker conveyor equipped with an adjustable hinged boom that raises or lowers the conveyor according to the height of the stockpile.

Watering is the most commonly used technique for controlling windblown emissions from active stockpiles. A water truck equipped with a hose or other spray device may be used.

Locating stockpiles behind natural or manufactured windbreaks also aids in reducing windblown dust. Also, the working area of active piles should be located on the leeward side of the pile. Very fine materials or materials that must be stored dry can be controlled effectively only through the use of suitable stockpile enclosures or silos, even though these may create load-out problems.

The application of soil stabilizers, which are primarily petroleum or synthetic resins in emulsion, has been reasonably effective for storage piles that are inactive for long periods of time and for permanent waste piles or spoil banks. These chemical binders cause the surface particles to adhere to one another, forming a durable wind-and rain-resistant crust (relatively insoluble in water). As long as this crust remains intact, the stockpile is protected from wind erosion. It should be noted that chemical binders applied to the stockpiles may contaminate the material being stockpiled.

3.2 CONTROL OF FUGITIVE PROCESS SOURCES

A non-metallic mineral processing plant can consist of crushers, grinders, screens, conveyor transfer points, and storage, loading, and bagging facilities. Effective emission control can present a number of problems due to the multiplicity of dust-producing sources at the plant. Methods utilized to reduce fugitive process emissions include wet dust suppression, dry collection systems, and a combination of the two. Wet dust suppression consists of introducing moisture into the material flow, causing fine particulate matter to be confined and remain with the material flow rather than becoming airborne. Dry collection systems involve hooding and enclosing dust-producing points and exhausting emissions to a control device. Combination

systems utilize both methods at different stages throughout the processing plant. In addition to these control techniques, the use of enclosed structures to house process equipment may also be effective in reducing fugitive process emissions.

3.2.1 Wet Dust Suppression

In a wet dust suppression system, dust emissions are controlled by applying moisture in the form of water or water plus a surfactant sprayed at critical dust producing points in the process flow. This causes dust particles to adhere to larger mineral pieces or to form agglomerates too heavy to become or remain airborne. The objective of wet dust suppression is not to fog an emission source with a fine mist to capture and remove particulates emissions, but rather to keep the material moist at all process stages.

The addition of 5.0 to 8.0 percent moisture (by weight), or greater, in the form of water may be required to adequately suppress dust.[9] In many installations this may not be acceptable because excess moisture may cause screening surfaces to blind, thus reducing both their capacity and effectiveness, or result in the coating of mineral surfaces yielding a marginal or nonspecification product. To counteract these deficiencies, small quantitities of specially formulated surfactants are blended with the water to reduce its surface tension and consequently improve its wetting efficiency so that dust particles may be suppressed with a minimum of added moisture (less than one percent). Although these agents may vary in composition, they are characteristically composed of a hydrophobic group (usually a long chain hydrocarbon) and a hygroscopic group (usually a sulfate, sulfonate, hydroxide, or ethylene oxide). When introduced into water, these agents cause an appreciable reduction in its surface tension.[10] The dilution of such an agent in minute quantities in water (1 part wetting agent to 1,000 parts water) is reported to make dust control practical throughout an entire non-metallic mineral processing plant.[11] Furthermore, these wetting agents reportedly improve the effectiveness of the suppression system since the application of plain water will not effectively wet the under 10 μm particles.[12]

In adding moisture to the process material, several application points are normally required. Because the time required for the proper distribution of the added moisture on the mineral is critical to achieving effective dust control, treatment normally begins as soon as possible after the material to be processed is introduced into the plant. As such, the initial application point is commonly made at the primary crusher truck dump. In addition to introducing moisture prior to processing, this application contributes to reducing intermittent dust emissions generated during dumping operations. Spray bars are located either on the periphery of the dump hopper or above it. Applications are also made at the discharge of the primary crusher and at all secondary and tertiary crushers where new dry surfaces and dust are generated by the fracturing of minerals. Further wetting of the material at screens, conveyor transfer points, conveyor and screen discharges to bins, and conveyor discharges to storage piles may also be necessary. The wetted material may exhibit a carryover dust control effect that may suppress the dust through a number of material handling operations. The amount of moisture required at each application point is dependent on a number of factors including the wetting agent used, its dilution ratio in water, the type and size of process equipment, and the characteristics of the material processed (type, size distribution, feed rate, and moisture content).

A typical wet dust suppression system, such as the system illustrated in Figure 3.1, contains a number of basic components and features including a dust control agent, liquid proportioning equipment, a distribution system, and control actuators. A proportioner and pump are necessary to proportion the surfactant and water at the desired ratio and to provide moisture in sufficient quantity and adequate pressure to meet the demands of the overall system.

Distribution of the liquid is accomplished by spray headers fitted with pressure spray nozzles. One or more headers are used to apply the dust suppressant mixture at each treatment point at the rate and spray configuration required to effect dust control. A variety of nozzle types may be used

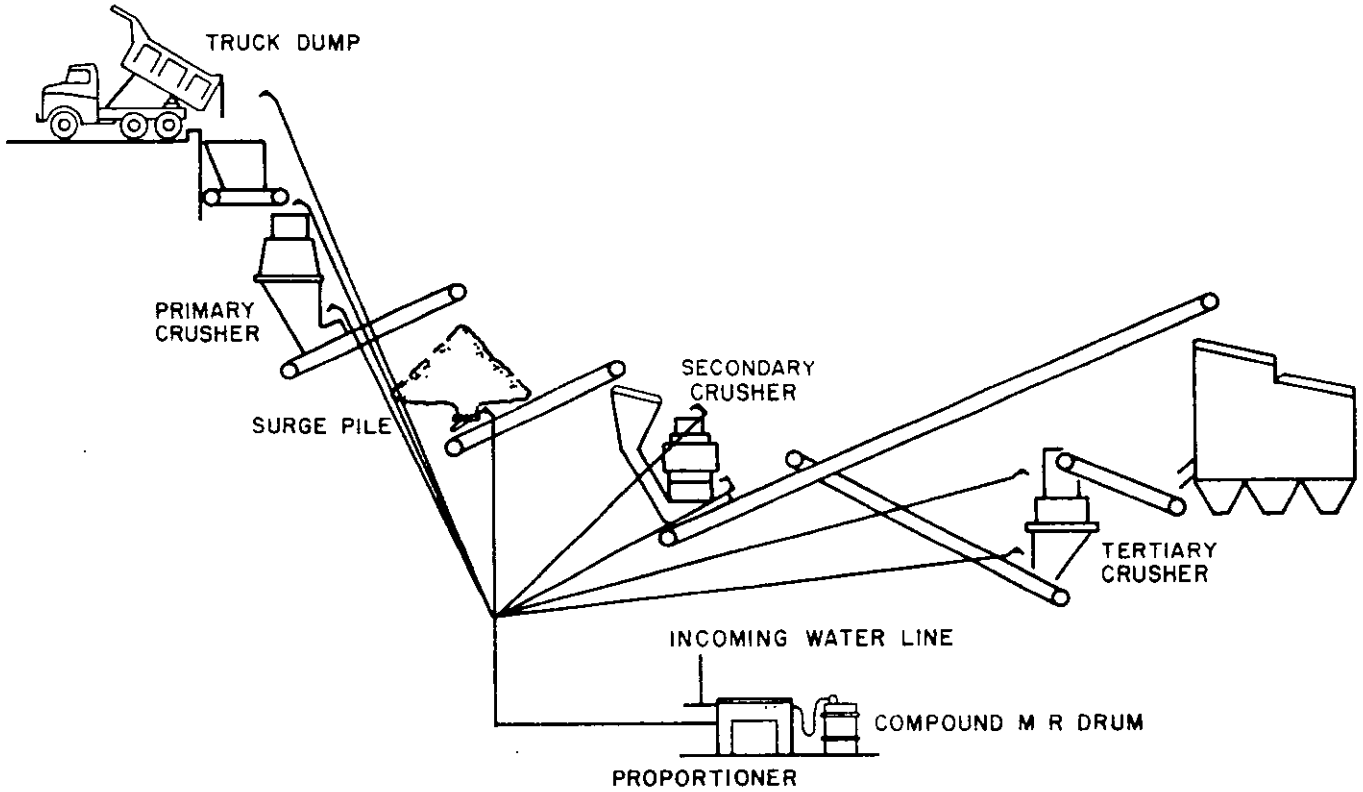

Figure 3.1 Wet dust suppression system.[11]

including hollow-cone, solid cone, or gas nozzles, depending on the spray pattern desired. To prevent nozzle plugging, screen filters are used. Figure 3.2 shows a typical arrangement for the control of fugitive process emissions at a crusher discharge.

Spray actuation and control is important to prevent waste and undesirable muddy conditions, especially when the material flow is intermittent. Spray headers at each application point are normally equipped with an on-off controller which is interlocked with a sensing mechanism so that sprays will be operative only when there is material actually flowing. In addition, systems are sometimes designed to operate under all weather conditions. To provide protection from freezing, exposed pipes are usually traced with heating wire and insulated. When the system is not is use, it should be drained to insure that no water remains in the lines. During prolonged periods when the ambient temperature remains below $0^{o}C$ ($32^{o}F$), wetted raw materials will freeze into large blocks and adhere to cold surfaces such as hopper walls.[13]

Recently, a different type of wet spray system has been available as an alternative to the wet dust suppression system discussed above. In this system, the emission source is actually enclosed and fogged with a fine mist to capture and remove particulate emissions. This system also differs from the wet suppression system in that no chemical wetting agents are used. This fogging system performs like a wet scrubber with the water sprays contacting the dust particles while airborne.

3.2.2 Dry Collection Systems

Particulate emissions generated at plant process operations (crushers, screens, grinders, conveyor transfer points, product loading operations, and bagging operations) may be controlled by capturing and exhausting potential emissions to a control device. Depending on the physical layout of the plant, emission sources may be either manifolded to a single centrally located control device or ducted to a number of individual control devices. Control systems consist of an exhaust system utilizing hoods and enclosures to capture and confine emissions, ducting and fans to convey the captured emissions to a control device, and the control device for particulate removal prior to exhausting the air stream to the atmosphere.

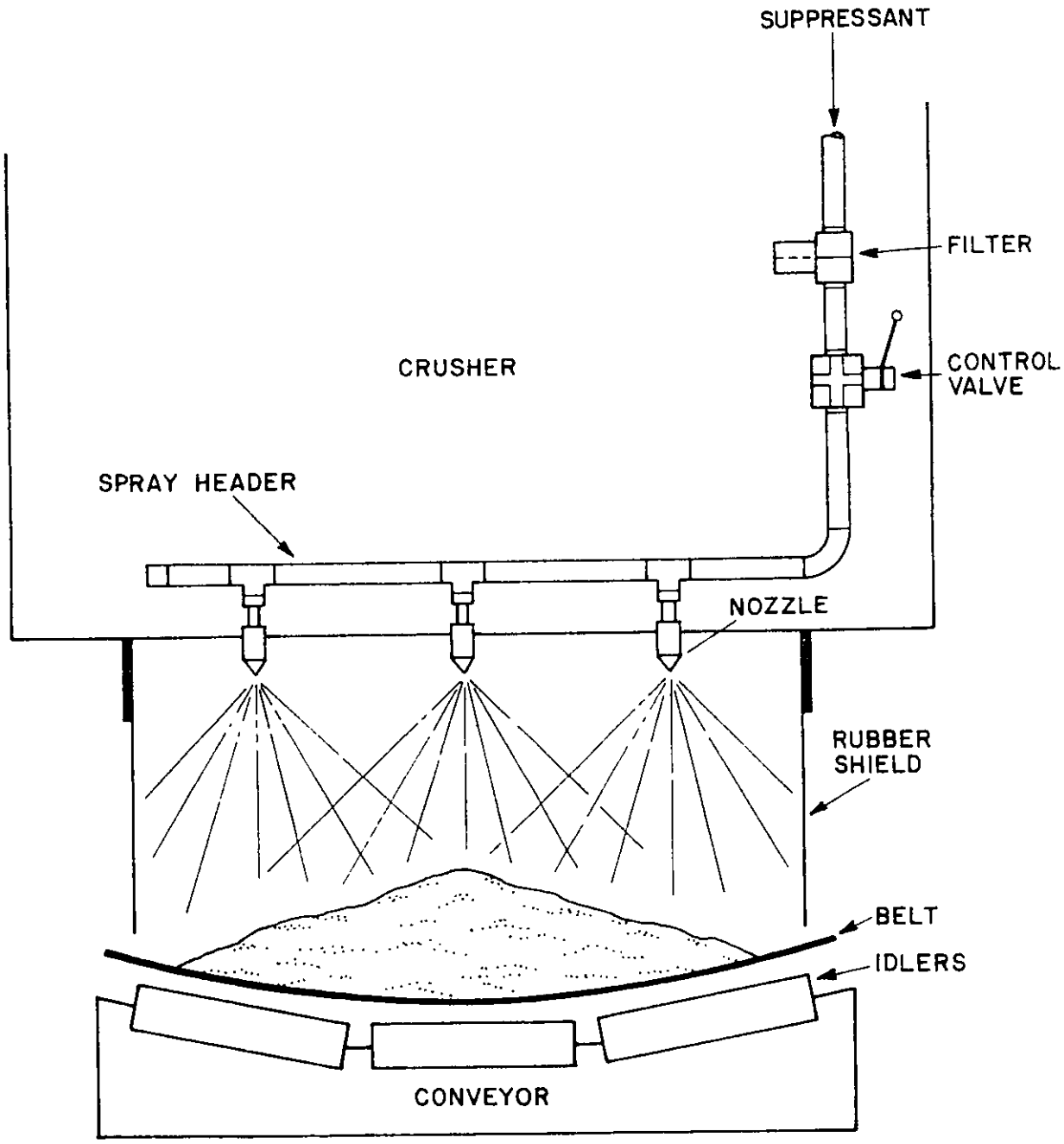

Figure 3.2 Dust suppression application at crusher discharge.

3.2.2.1 Exhaust Systems and Ducting

If a control system is to effectively prevent particulate emissions from being discharged to the atmosphere at the locations where emissions are generated, local exhaust systems including hooding and ducting must be properly designed and balanced. (Balancing refers to adjusting the static pressure balance, which exists at the junction of two branches, to obtain the desired volume in each branch). Process equipment should be enclosed as completely as practicable, allowing for access for operation, routine maintenance, and inspection requirements. For crushing facilities, recommended hood capture velocities range from 60 to 150 meters (200 to 500 feet) per minute.[14,15] In general, a minimum indraft velocity of 61 meters (200 feet) per minute should be maintained through all open hood areas. Proper design of hood and enclosures will minimize exhaust volumes required and, consequently, power consumption. In addition, proper hooding will minimize the effects of cross drafts (wind) and the effects of induced air (i.e., air placed in motion as a result of machine movement or falling material). A well-designed enclosure can be defined as a housing which minimizes open areas between the operation and the hood and contains all dust dispersion action.

Good duct design dictates that adequate conveying velocities be maintained so that the transported dust particles will not settle in the ducts along the way to the collection device. Based on information for crushed stone, conveying velocities recommended for mineral particles range from 1,050 to 1,350 meters (3,500 to 4,500 feet) per minute.[16,17]

Adequate design and construction specifications are available and have been utilized to produce efficient, long-lasting systems. Various guidelines establishing minimum ventilation rates required for the control of crushing plant operations, and upon which the ventilation rates most commonly utilized in the industry are based, are discussed briefly below.

Crushers and Grinders

Hooding and air volume requirements for the control of fugitive process emissions from crushers and grinders are quite variable depending upon the size and shape of the emission source, the hood's position relative to the

points of emission, and the velocity, nature, and quantity of the released particles. The only established criterion is that a minimum indraft velocity of 61 meters (200 feet) per minute be maintained through all open hood areas. To achieve this, capture velocities in excess of 150 meters (500 feet) per minute may be necessary to overcome induced air motion, resulting from the material feed and discharge velocities and the mechanically induced velocity (fan action) of a particular equipment type.[18] To achieve effective emission control, ventilation should be applied at both the upper portion (feed end) of the equipment and the discharge point. An exception to this would be at primary jaw or gyratory crushers because of the necessity to have ready access to dislodge large rocks which may get stuck in the crusher feed opening. Where access to a device is required for maintenance, removable hood sections may be utilized.

In general, the upper portion of the crusher or grinder should be enclosed as completely as possible, and exhausted according to the criteria established for transfer points. The discharge to the conveyor should also be enclosed as completely as possible. The exhaust rate varies considerably depending on crusher type. For impact crushers or grinders, exhaust volumes may range from 120 to 240 cubic meters (4,000 to 8,000 cubic feet) per minute.[19] For compression type crushers, an exhaust rate of 50 cubic meters per minute per meter (500 cubic feet per minute per foot) of discharge opening should be sufficient.[20] The width of the discharge opening will approximate the width of the receiving conveyor. For either impact crushers or compression type crushers, pick-up should be applied downstream of the crusher for a distance of at least 3.5 times the width of the receiving conveyor.[21] A typical hood configuration used to control particulate emissions from a cone crusher is depicted in Figure 3.3.

Grinding or milling circuits which employ air conveying systems operate at slightly negative pressure to prevent the escape of air containing the ground rock. Because the system is not airtight, some air is drawn into the system and must be vented. This vent stream can be controlled by discharging it through a control device.

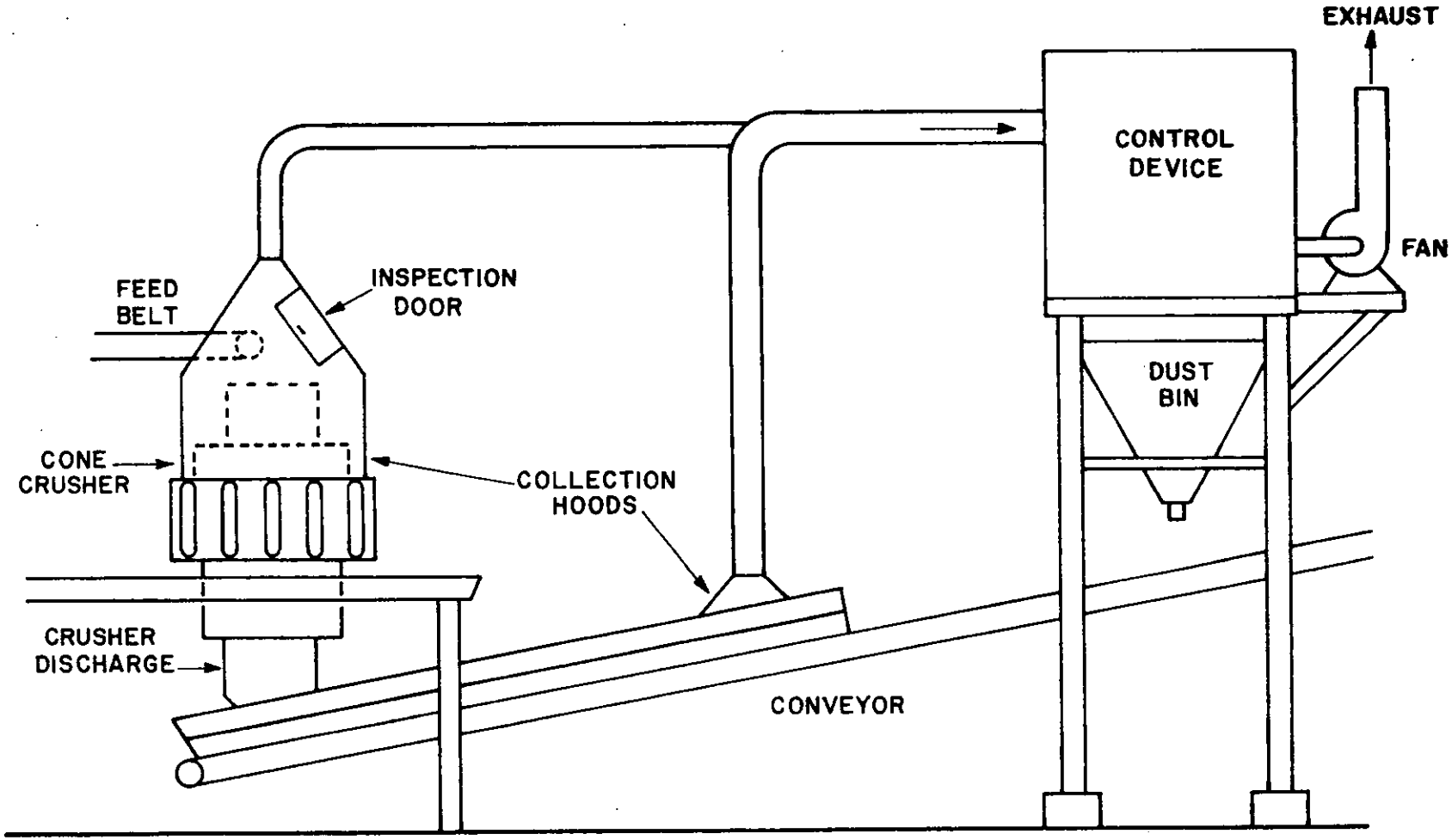

Figure 3.3 Hood configuration used to control a cone crusher.

Screens

A number of exhaust points are usually required to achieve effective control at screening operations. A full coverage hood, as depicted in Figure 3.4, is generally used to control emissions generated at actual screening surfaces. Required exhaust volumes vary with the surface area of the screen and the amount of open area around the periphery of the enclosure. A well-designed enclosure should have a space of no more than 5 to 10 centimeters (2 to 4 inches) around the periphery of the screen. A minimum exhaust rate of 15 cubic meters per minute per square meter (50 cubic feet per minute per square foot) of screen area is commonly used with no increase for multiple decks.[22] Additional ventilation air may be required at the discharge chute to conveyor or bin transfer points. If ventilation is needed, these points are treated as regular transfer points and exhausted accordingly.

Conveyor Transfer Points

At conveyor to conveyor transfer points, hoods should be designed to enclose both the head pulley of the upper conveyor and the tail pulley of the lower conveyor as completely as possible. With careful design, the open area should be reduced to about 0.15 square meter per meter (0.5 square foot per foot) of conveyor width.[23] Factors affecting the air volume to be exhausted include the conveyor speed and the free-fall distance to which the material is subjected. Recommended exhaust rates are 35 cubic meters per minute per meter (350 cubic feet per minute per foot) of conveyor width for conveyor speeds less than 60 meters (200 feet) per minute and 50 cubic meters per minute per meter (500 cubic feet per minute per foot) for conveyor speeds exceeding 60 meters (200 feet) per minute.[24] For a conveyor-to-conveyor transfer with less than 0.91 meter (3 feet) fall, the enclosure illustrated in Figure 3.5 is commonly used.

For conveyor-to-conveyor transfers with a free-fall distance greater than 0.91 meter (3 feet) and for chute-to-belt transfers, an arrangement similar to that depicted in Figure 3.6 is commonly used. The exhaust connection should be made as far downstream as possible to maximize dust fallout and thus minimize needless dust entrainment. For very dusty material, additional exhaust air may be required at the tail pulley of the receiving

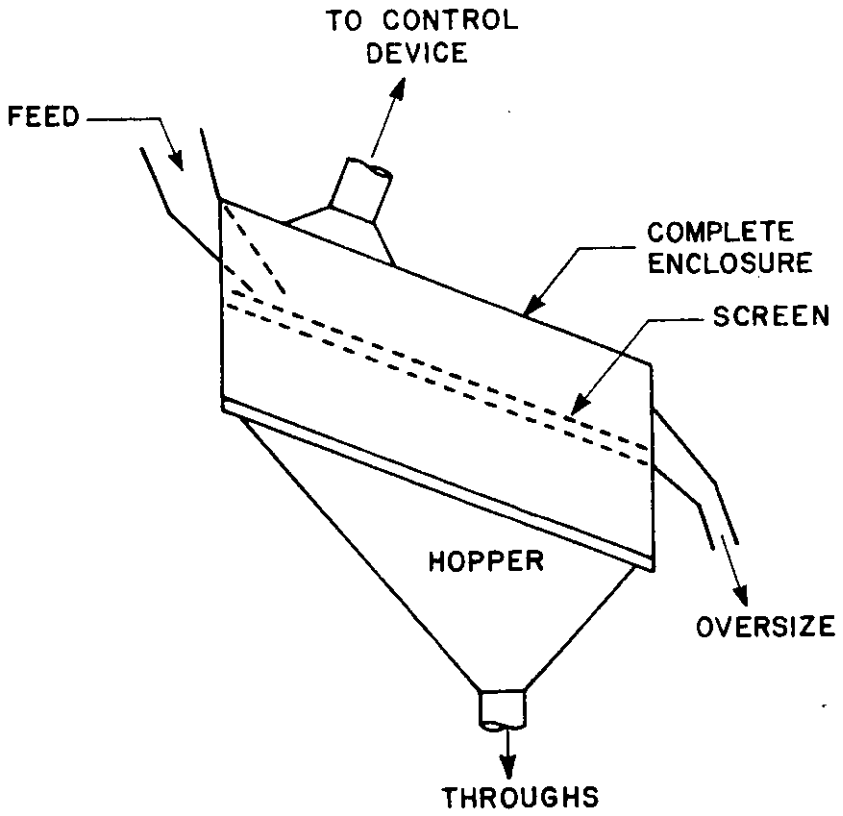

Figure 3.4 Hood configuration for vibrating screen.

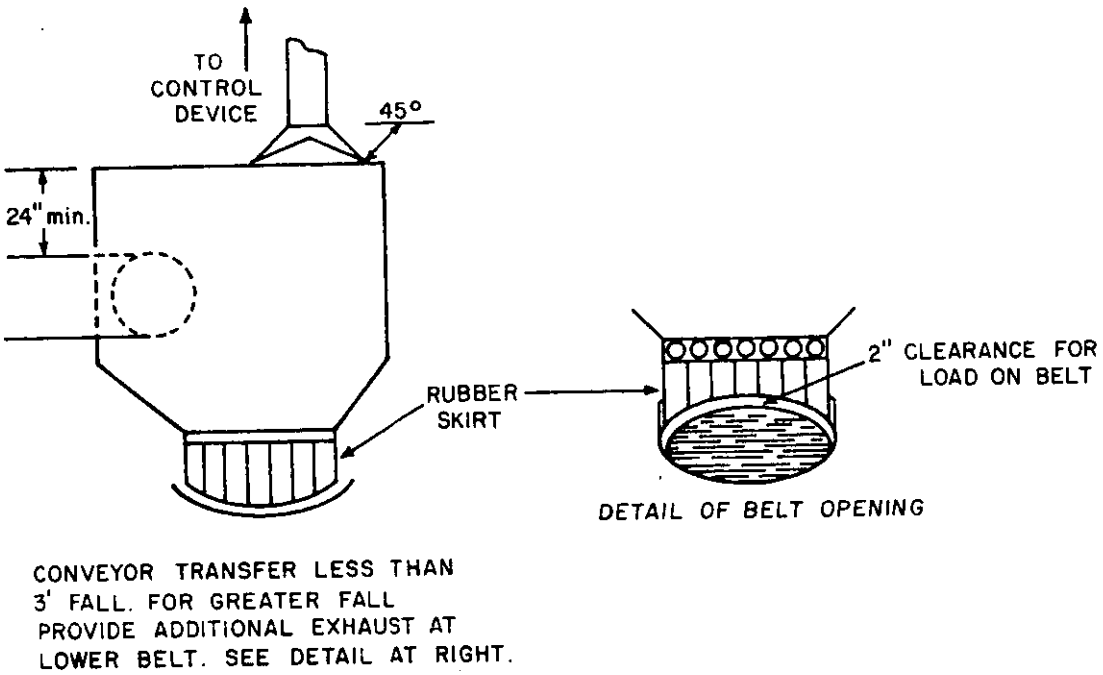

Figure 3.5 Hood configuration for conveyor transfer less than 0.91 meter (3 feet) fall.

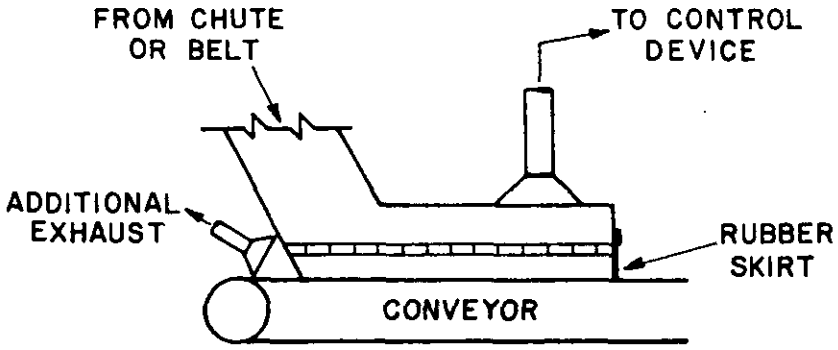

Figure 3.6 Hood configuration for a chute to belt or conveyor transfer greater than 0.91 meter (3 feet) fall.

conveyor. Recommended air volumes are 21 cubic meters (700 cubic feet) per minute for conveyors 0.91 meter (3 feet) wide and less, and 30 cubic meters (1,000 cubic feet) per minute for conveyors wider than 0.91 meter (3 feet).[25]

Conveyor or chute-to-bin transfer points differ from the usual transfer operation in that there is no open area downstream of the transfer point. Thus, emissions are generated only at the loading point. As illustrated in Figure 3.7, the exhaust connection is normally located at some point remote from the loading point and exhausted at a minimum rate of 67 cubic meters per minute per square meter (200 cubic feet per minute per square foot) of open area.[26]

Product Loading and Bagging

Particulate emissions from truck and railcar loading of coarse material can be minimized by reducing the open height that the material must fall from the silo or bin to the shipping vehicle. Shrouds, telescoping feed tubes, and windbreaks can further reduce the fugitive process emissions from this intermittent source. Particulate emissions from loading of fine material into either trucks or railcar can be controlled by an exhaust system vented to a baghouse. The system is similar to the system described above for controlling bin or hopper transfer points (see Figure 3.7). The material is fed through one of the vehicle's openings and the exhaust connection is normally at another opening. The system should be designed with a minimum amount of open area around the periphery of the feed chute and the exhaust duct.

Bagging operations are controlled by local exhaust systems and vented to a baghouse for product recovery. Hood face velocities on the order of 150 meters (500 feet) per minute should be used. An automatic bag filling operation and vent system is shown in Figure 3.8.

3.2.2.2 Control Devices

Baghouses

The most efficient dry collection devices used in the non-metallic mineral industry are baghouses (fabric filters). For most non-metallic mineral processing plant applications, mechanical shaker type baghouses which require periodic shutdown for cleaning after four or five hours of operation are usually used. These units are normally equipped with

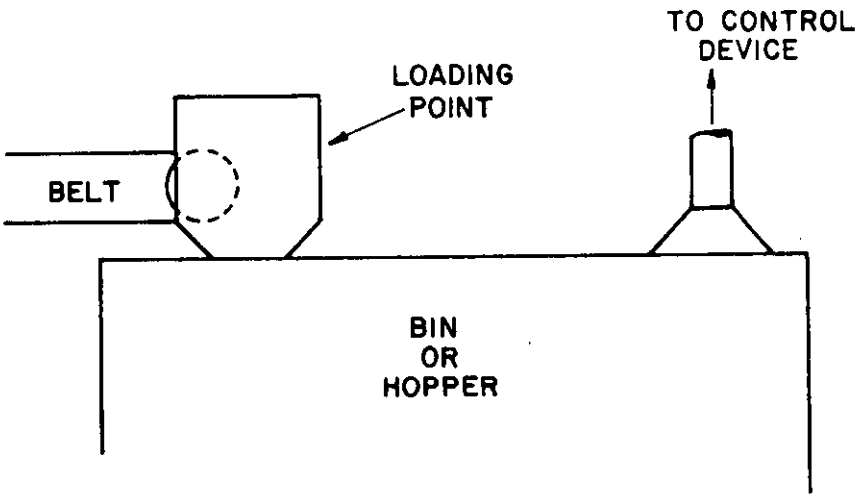

Figure 3.7 Exhaust configuration at bin or hopper.

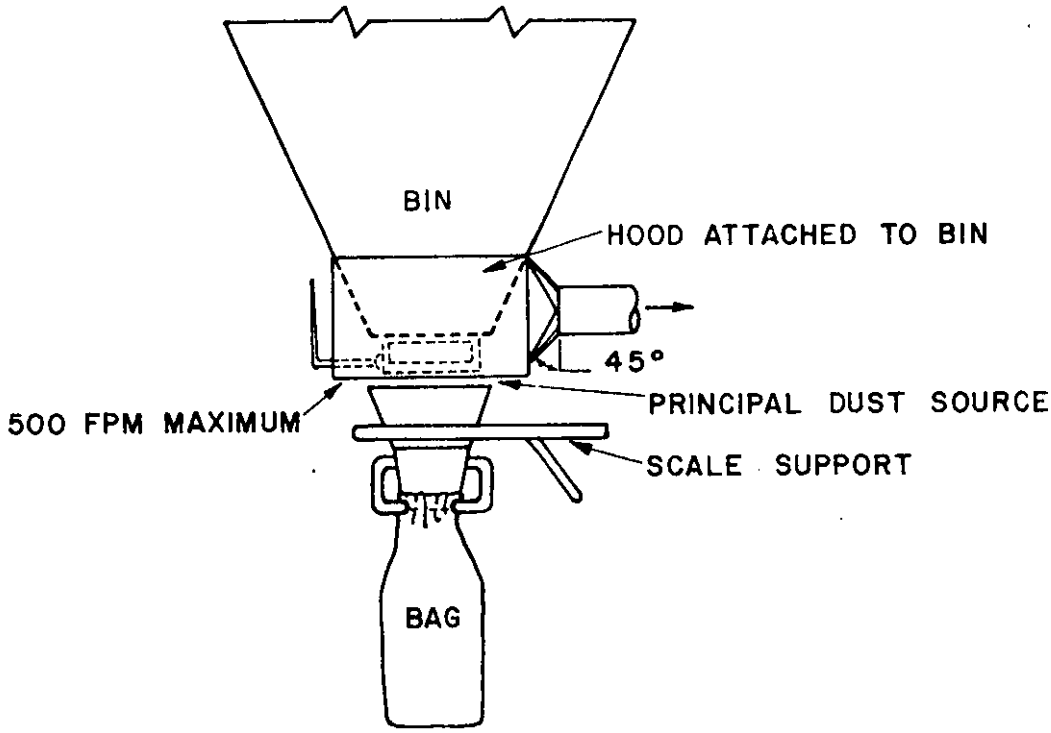

Figure 3.8 Bag filling vent system.[27]

cotton sateen bags and operated at an air-to-cloth ratio of 2:1 or 3:1. A cleaning cycle usually requires no more than two to three minutes of bag shaking and is normally actuated automatically when the exhaust fan is turned off. A typical baghouse is illustrated in Figure 3.9.

Another method of bag cleaning is to use reverse airflow down the tubes at such a rate that there is no net movement of air through the bag. This causes the bag to collapse which results in the filter cake breaking-up and falling off the bag. A final method is reverse air pulsing where a perforated ring travels up and down each bag or sleeve. Air jets in the ring force the bag to collapse, then reopen, breaking the filter cake apart. These two methods are shown in Figure 3.10.

For applications where it may be impractical to turn off the control system, baghouses with continuous cleaning are employed. Although compartmented mechanical shaker types may be used, jet pulse units are predominantly used by the industry. These units usually use wool or synthetic felted bags for a filtering media and may be operated at an air-to-cloth ratio of as high as 6:1 to 10:1. Regardless of the baghouse type used, jet pulse or shaker, greater than 99 percent efficiency can be attained even on submicron particle sizes.[28] Two baghouses tested by EPA for both inlet and outlet emission levels had collection efficiencies of 99.8 percent.[29,30]

Another major parameter considered in designing baghouses is the air-to-cloth ratio or filter ratio defined as the ratio of gas filtered in cubic meters (feet) per minute to the area of the filtering media in square meters (feet). A high ratio results in possible blinding or clogging of the bags and a resultant decrease in the baghouse collection efficiency and an increase in bag material wear.

The frequency of cleaning can be continuous in which a section of the baghouse is removed from operation and cleaned before going on to another section. Alternatively, intermittent cleaning consisting of timed cycles of cleaning and operation is used. Sensors can be installed that start the cleaning cycle when some specified pressure drop across the system occurs because of the buildup of the filter cake.

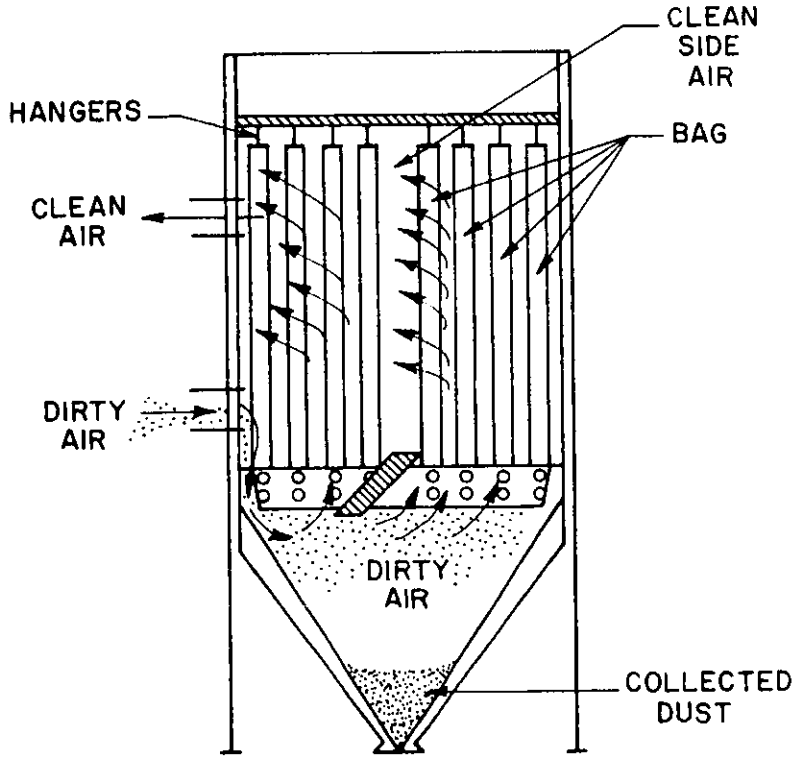

Figure 3.9 Typical baghouse operation.

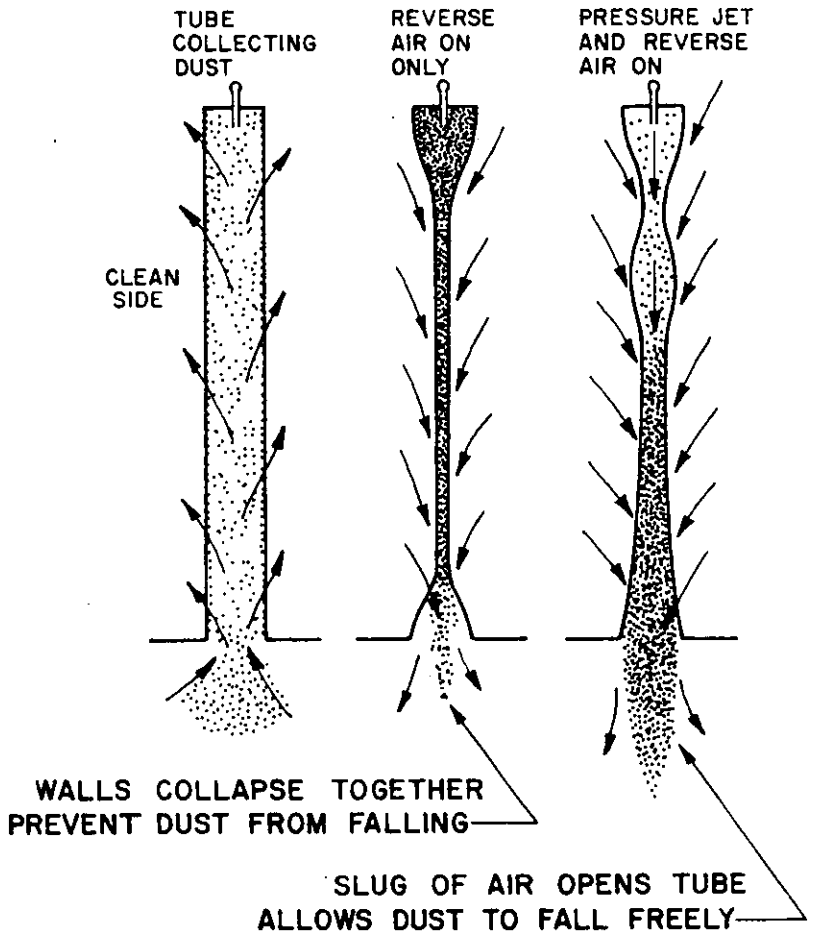

Figure 3.10 Baghouse cleaning methods.[32]

Materials used in bag construction include cotton, Teflon, glass, Orlon, Nylon, Dacron, wool, Dynel, and others. Temperature and other operating parameters must be taken into account in the selection of fabric material, though most industry processes are at ambient conditions. The most popular materials in terms of wear and performance are the synthetic fabrics or cotton sateen. Other parameters considered in the design of baghouse and fabric selection include frequency of cleaning, cloth resistances to corrosion, and ore moisture.

Other control devices used in the industry include cyclones and low energy scrubbers. Although these control devices may demonstrate efficiencies of 95 to 99 percent for coarse particles (40 microns and larger), their efficiencies are less than 85 percent for medium and fine particles (20 microns and smaller).[31] Although high energy scrubbers and electrostatic precipitators could conceivably achieve results similar to that of a baghouse, these methods are not commonly used to control particulate emissions in the industry.

Wet Capture Devices

The principal of collection in wet capture devices involves contacting dust particles with liquid droplets in some way and then having the wetted particles impinge upon a collecting surface where they can be flushed away with water. The method of contacting the dust has many variations depending on the equipment manufacturer. The major types of wet collectors are cyclones, mechanical scrubbers, mechanical-centrifugal scrubbers, and venturi scrubbers.[32] These devices are more efficient than inertial separators. Wet capture devices can also handle high temperature gases or mist-containing gases. Costs and efficiencies also vary with equipment selection and operating conditions. Efficiencies are higher at lower particle size ranges than with dry cyclones.

As with dry cyclones, wet cyclones impart a centrifugal force to the incoming gas stream causing it to increase in velocity. The principal difference here is that atomized liquids are introduced to contact and carry

away dust particles. The dust impinges upon the collector walls with clean air remaining in the central area of the device. Efficiencies in this type of equipment average in the vicinity of 98.2 percent.

Mechanical scrubbers have a water spray created by a rotating disc or drum contacting the dust particles. Extreme turbulence is created which insures this required contact. Efficiencies are about the same as wet cyclone scrubbers.

Mechanical-centrifugal scrubbers with water sprays are similar to their dry counterparts with the exception that a water spray is located at the gas inlet so that the particulate matter is moistened before it reaches the blades. The water droplets containing particulate are impinged on the blades while the clean air is exhausted. This is depicted in Figure 3.11. In this case, the spray not only keeps the blades wet so that dust will impinge upon them, but it also serves as a medium to carry away particles. Some types of scrubbers use high pressure-sprays, consuming more energy and water, but have higher efficiencies than other wet capture devices.

Venturi scrubbers rely on an impaction mechanism and extreme turbulence for dust collection. Gas velocities in the throat of the venturi tube are 4,500 to 6,000 meters (15,000 to 20,000 feet) per minute. It is at this point that low pressure water sprays are placed. The extreme turbulence causes excellent contact of water and particulate. The wetted particules travel through the venturi tube to a cyclone spray collector. Efficiencies are very high, averaging 99.9 percent.[33] These high efficiencies are also evidenced in the small particle size ranges collected (<1 micron). This design is best suited to applications involving removal of 0.5 to 5 micron sizes. The construction is similar to a venturi meter with 25° converging and 7° diverging sections. This results in a 4:1 area reduction between the inlet and throat.

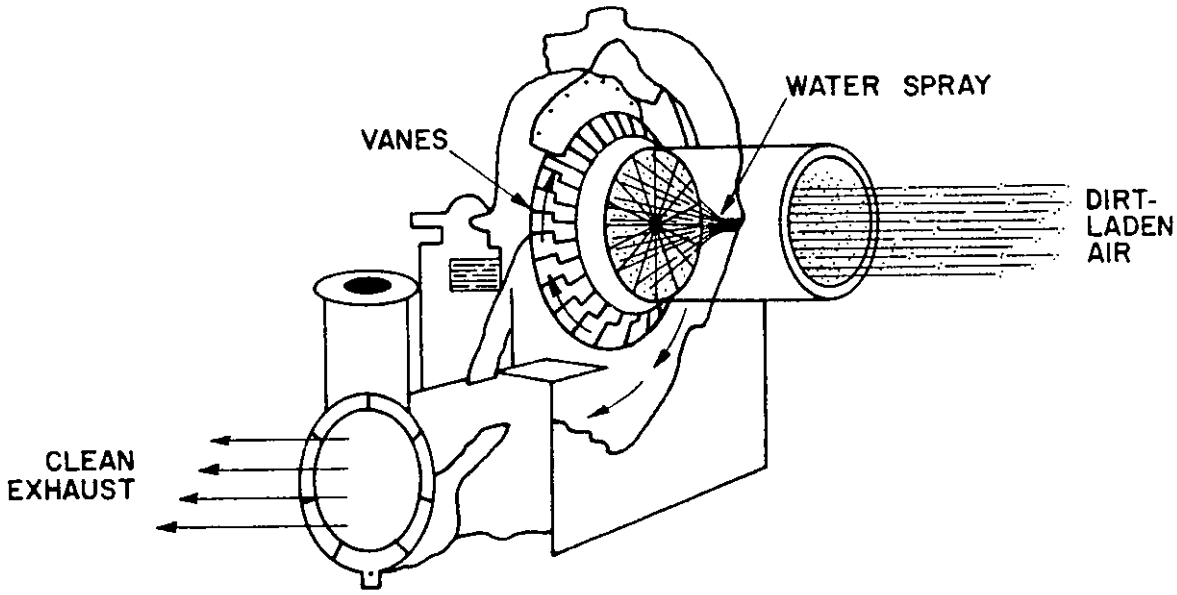

Figure 3.11 Mechanical - centrifugal scrubber.

3.2.3 Combination Systems

Wet dust suppression and dry collection systems are often used in combination to control particulate emissions from crushing plant facilities. As illustrated in Figure 3.12, wet dust suppression techniques are generally used to prevent emissions at the primary crushing stage and at subsequent screens, transfer points, and crusher inlets. Dry collection systems are generally used to control emissions at the discharge of the secondary and tertiary crushers where new dry surfaces and fine particulates are formed. In addition to controlling emissions, dry collection systems result in the removal of a large portion of the fine particulates generated with the resultant effect of making subsequent dust suppression applications more effective with a minimum of added moisture.

3.3 FACTORS AFFECTING THE PERFORMANCE OF CONTROL METHODS

3.3.1 Dust Suppression

The effectiveness of wet suppression is dependent on the amount of moisture added to the process flow. There are a number of factors which may affect the performance of a wet dust suppression system. These include the surfactant used, the method of application, characteristics of the material, and the type and size of the process equipment serviced. The number, type, location, and configuration of spray nozzles at an application point, as well as the speed at which a material stream moves past an application point, may affect both the efficiency and uniformity of wetting. In addition, meteorological factors such as wind, ambient temperature, and humidity (which affect the evaporation rate of added moisture) also adversely affect the overall performance of a wet dust suppression system. Where the material processed contains a high percentage of fines, such as the product from a hammermill, dust suppression may be inadequate because of the large surface areas to be treated.

Dust suppression may offer a viable control alternative to particulate emission control systems at process facilities if sufficient moisture is added to the material. Generally, wet dust suppression is only possible with crushing operations (crushers, conveyor transfer points, and screens) because

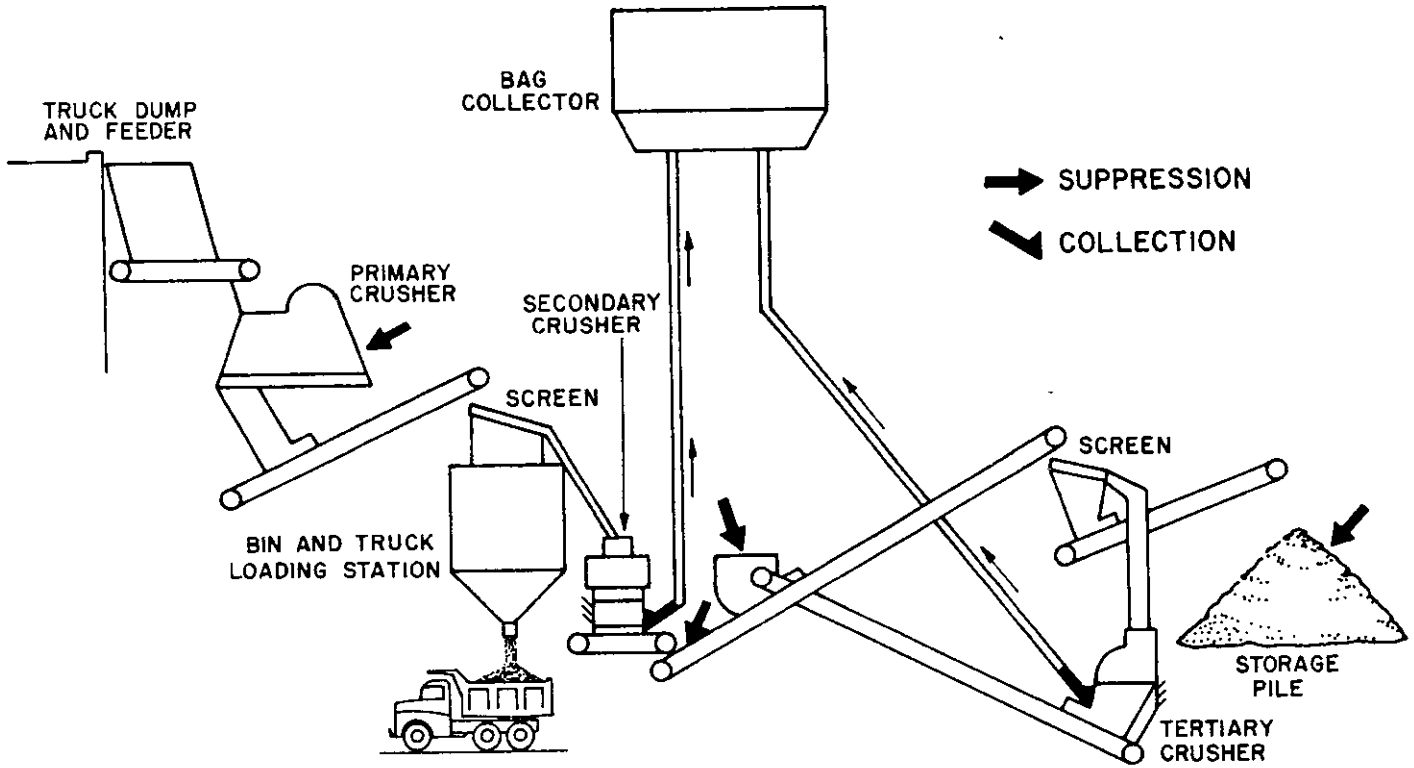

Figure 3.12 Typical combination dust control system.

a coarser material is handled and plugging problems will not likely occur. In addition, wet suppression may not be possible in freezing weather or arid regions. Also, some industries (e.g., talc, rock salt) prefer not to handle material with high moisture (even in crushing operations).

3.3.2 Dry Collection Systems

For dry collection systems, factors affecting both capture efficiency and control efficiency are important. Wind blowing through hood openings can significantly reduce the effectiveness of a local exhaust system. This can be appreciated when one considers that an indraft velocity of 60 meters (200 feet) per minute is equivalent to less than 3.7 kilometers (2.3 miles) per hour. Consequently, the process equipment should be completely enclosed or the hood openings minimized.

Installations located in areas of high precipitation have chosen to house process equipment in buildings or structures to increase their operating hours. An added effect of this is to reduce the impact that high winds may have on a local exhaust system which is not properly enclosed. Much of the processing in the industries investigated in this study occurs in buildings which enclose the equipment.

An exhaust system must be properly maintained and balanced if it is to remain effective. Good practice dictates that systems be inspected periodically and capture and conveying velocities checked against design specifications to assure that the system is indeed functioning properly. The primary causes for systems becoming unbalanced are the presence of leaks resulting from wear due to abrasion or corrosion, and the settling of dust in poorly designed duct runs which effectively reduces the cross sectional area of the duct and increases pressure drop.

3.3.3 Combined Suppression and Control Systems

The factors affecting the performance of combination systems are the same as those encountered where dust suppression or dry collection systems are used alone.

3.4 PERFORMANCE OF PARTICULATE EMISSION CONTROL TECHNIQUES

3.4.1 Particulate Emission Data

Particulate emission measurements were conducted by the U.S. Environmental Protection Agency (EPA) on 16 baghouses used to control emissions generated at crushing, screening, and conveying (transfer points) operations at five crushed stone plants, one kaolin plant, one fuller's earth plant, and on one baghouse used to control emissions generated at grinding, classifying, and fine product loading operations at a feldspar installation. Table 3.2 briefly summarizes the process operations controlled by each baghouse tested, along with specifications for each baghouse.

Of the eight plants tested, three processed limestone (A, B, and C), two processed traprock (D and E), one processed feldspar (G), one processed kaolin (L), and one processed fuller's earth (M). Four of the five crushed stone plants were commercial crushed stone operations producing a variety of end products including dense-graded road base stone, asphalt aggregates, concrete aggregates, and non-specific construction aggregates. In addition, plant B produced about 54 megagrams (60 tons) of agstone per hour. Facilities A1 through A4 consist of process operations producing raw material for the manufacture of portland cement. Facilities A1 and B1 are both impact crushers used for the primary crushing of run-of-quarry limestone rock. Facility A3 is somewhat unique in that it consists of a single conveyor transfer point at the tail of an overland conveyor. As indicated in Table 3.2, the remaining facilities tested consisted of multiple secondary and tertiary crushing and screening operations, adjunct conveyor transfer points, and grinding operations. These include one primary jaw crusher, three secondary cone crushers, two hammer mills, eight tertiary cone crushers, 19 screens, 13 product bins, over 17 conveyor transfer points, one pebble mill, two roller mills, one fluid energy mill, one impact mill, one bucket elevator, and a fine product loading system.

A minimum of three test runs, using EPA Method 5 or 17, were conducted at each process operation tested. (For this industry, both EPA Method 5 and 17 are acceptable particulate sampling methods). Sampling was performed only

TABLE 3.2 BAGHOUSE UNITS TESTED BY EPA

Plant/ facility	Rock type processed	Baghouse specifications: Type	Air-to-cloth ratio	Capacity: scms[a]	Capacity: scfm[b]	Process operations controlled
A1	Limestone	Jet pulse	5.3: 1	12.5	(26,472)	Primary impact crusher
A2	Limestone	Jet pulse	7.0: 1	7.5	(15,811)	Primary screen
A3	Limestone	Jet pulse	7.0: 1	1.1	(2.346)	Conveyor transfer point
A4	Limestone	Jet pulse	5.2: 1	5.0	(10,532)	Secondary cone crusher, screen
B1	Limestone	Shaker	3.1: 1	2.7	(5,784)	Primary impact crusher
B2	Limestone	Shaker	2.1: 1	8.6	(18,197)	Scalping screen, secondary cone crusher, two finishing screens, hammer mill, five storage bins, six conveyor transfer points
C1	Limestone	Shaker	2.3: 1	3.5	(7,473)	Primary jaw crusher, scalping screen, hammer mill
C2	Limestone	Shaker	2.0: 1	3.1	(6,543)	Two finishing screens, two conveyor transfer points
D1	Traprock	Shaker	2.8: 1	15.0	(31,863)	One scalping and two sizing screens, secondary cone crusher, two tertiary cone crushers, several conveyor transfer points
D2	Traprock	Shaker	2.8: 1	12.3	(25,960)	Finishing screen, several conveyor transfer points
E1	Traprock	Jet pulse	5.2: 1	7.0	(14,748)	Two sizing screens, four tertiary cone crushers, several conveyor transfer points
E2	Traprock	Jet pulse	7.5: 1	10.0	(21,122)	Five finishing screens, eight storage bins
M1	Fuller's earth	Reverse air	6.0: 1	0.9	(1,800)	Raymond and fluid energy mills, conveyor transfer points, vibrating screens
M2	Fuller's earth	Reverse air	5.2: 1	1.6	(3,300)	
G1	Feldspar	Reverse air	3.0: 1	1.9	(3,960)	Pebble mill, bucket elevator, two conveyor transfer points, fine product loading
L1	Kaolin	Jet pulse	5.0: 1	6.6	(14,040)	Raymond impact mill
L2	Kaolin	Jet pulse	5.0: 1	3.3	(6,960)	Roller mill

[a]Standard cubic meters per second.

[b]Standard cubic feet per minute.

during periods of normal operation and was stopped and restarted to allow for intermittent process shutdowns and upsets (feed to the process). Where the process weight rate was indeterminable at a specific process operation, as in most instances, the process weight through the primary crushing stage was monitored to assure that the plant was operating at or near normal capacity. Moisture determinations on the material processed were also performed at each plant tested (except for plants A, G, L, and M) to permit an assessment of whether control was effected primarily by the dust collection system or by excessive moisture inherent in the material processed. The tests were considered valid if the material moisture was less than two percent.

The baghouses tested included jet pulse, reverse air, and mechanical shaker type units. The shaker type and reverse air type baghouse used cotton sateen bags and were operated at air-to-cloth ratios of 2:1 to 3:1. The jet pulse units tested were fitted with wool or synthetic fibers felted bags. Air-to-cloth ratios ranged from 5:1 to 7.5:1.

A survey performed by the Industrial Gas Cleaning Institute (IGCI)[34] under contract to EPA reported air-to-cloth ratios typically used for the various industry segments based upon the experience of their member companies. Table 3.3 presents this information. These ratios are based upon the following premises:

1. Air from a dry crushing or grinding operation at or near ambient temperature.
2. An inlet particulate content of 25 g/dscm (10 gr/dscf) for a volume of air equivalent to that required for a face velocity of 61 meters (200 feet) per minute at crusher openings.
3. An average particle size of 20 microns and a range from 0.5 to 100 microns.
4. No insulation or heating required.

The IGCI report states that the segments considered the most troublesome are those with the lowest air-to-cloth ratio. The lower ratios employed for some segments are premised upon such particulate properties as a high abrasiveness or a tendency to blind the filtering medium. The study further

states that no differentiation in the air-to-cloth ratio is required for the source of emission, be it crushing or grinding operation. An exception would be a micromill source emitting an average particle size smaller than that cited (i.e. 20 microns). For such a source, a lower air-to-cloth ratio would be needed than that indicated in Table 3.3.

The industry segment with the lowest air-to-cloth ratio listed in Table 3.3 is feldspar. EPA conducted tests for particulate emissions at a feldspar plant on a baghouse controlling emissions from a pebble mill system. The results of these tests indicate particulate emissions below 0.023 g/dscm (0.01 gr/dscf). The baghouse had a design air-to-cloth ratio of 3.03:1.

In addition, the IGCI report listed test results (using EPA Method 5) for two fluid energy mills processing fuller's earth. In both cases, the particulate emissions were controlled by a baghouse and were below 0.023 g/dscm (0.01 gr/dscf). The average particle size of the inlet stream was reportedly below 10 microns in both cases. EPA conducted tests for particulate emissions from a roller mill and a fluid energy mill, both used to grind fuller's earth. In both cases particulate emissions were controlled by baghouses. Emissions from the baghouse controlling the roller mill were less than 0.005 g/dscm (0.002 gr/dscf) and those from the fluid energy mill baghouse were less than 0.015 g/dscm (0.006 gr/dscf).

Tests were also conducted at two talc plants and a gypsum plant on baghouses controlling particulate emissions from various process sources. Emissions from these baghouses (see Appendix A) were greater than the other measured sources. These higher emission levels are not considered representative of a well-maintained and operated baghouse because excessive visible emissions were observed either continuously or frequently during the tests. The excessive visible emissions may have been caused by the presence of torn bags. Tests conducted at a kaolin plant on an impact mill and a roller mill resulted in measured emission rates of 0.037 and 0.016 g/dscm (0.016 and 0.007 gr/dscf) respectively, for the two process operations.

TABLE 3.3 AIR-TO-CLOTH RATIOS FOR FABRIC FILTERS USED FOR EXHAUST EMISSION CONTROL

Industrial segment	Air-to-cloth ratio acfm/ft^2
Sand and gravel	7.0
Clay	6.0
Gypsum	6.0
Lightweight aggregate	7.5
Perlite	
Vermiculite	
Pumice	4.5
Feldspar	4.0
Borate	5.0
Talc and soapstone	5.0
Barite	5.0
Diatomite	6.0
Rock salt	4.5
Fluorspar	6.0
Mica	6.0
Kyanite	4.5
Gilsonite	N.R.[a]
Crushed and broken stone	7.0

[a]No ratio reported for this segment.

As previously indicated, test results are presented on three of the 17 industries being discussed. These are crushed stone, feldspar, and clay (fuller's earth and kaolin). The crushed stone data are on crushing operations and associated process equipment. The data for feldspar, kaolin, and fuller's earth are for grinding systems. All the facilities tested are controlled by baghouses. Since the performance of baghouses is relatively unaffected by the size distribution of particulate, the emission levels from properly designed baghouses should be nearly the same over the wide variety of non-metallic minerals being covered.[35,36] Furthermore, the IGCI report stated that there is no difference in performance of a baghouse whether it is installed on a crushing or grinding operation for a particular industry. The differences in design (air-to-cloth ratio) of a baghouse for the various industries are premised upon such particulate properties as high abrasiveness or a tendency to blind the filtering medium. The IGCI report also states that the worst situation would be a source emitting an average particle size smaller than 20 microns. The clay grinding mills tested are the type of grinders generally used when an ultrafine product is required. Therefore, the data presented on the clay grinding mills, which have an average particle size of 6 microns or less (see Table 2.6), would represent the levels achievable under worst conditions. Table 3.4 contains a summary of the test data on inlet concentrations of particulate matter.

Test results for the various non-metallic mineral industries using properly operated baghouses are presented in Figure 3.13. The highest average outlet concentration measured at these facilities was 0.037 g/dscm (0.016 gr/dscf).

3.4.2 Visible Emissions Data

Visible emission observations were also made during the emission tests described above. The exhaust from each of the baghouses tested was observed in accordance with EPA Method 9 procedures. Visible emissions observed from the baghouses at plants A, C, D, E, G, and M were essentially zero. The highest six minute average recorded at plant B was 1 percent opacity. Plant L, a kaolin plant, exhibited continuous visible emissions of less than 5 percent opacity. This was considered to be steam, since only the first of three tests (which was conducted in the morning) had visible emissions. As the temperature of the ambient air rose, the visible emissions dissipated.

TABLE 3.4 SUMMARY OF INLET CONCENTRATIONS OF PARTICULATE MATTER DURING EPA TESTING

Plant (type of mineral)	Inlet concentration gr/dscf
Plant B (limestone)	6.3
Plant G (feldspar)	6.03
Plant H (gypsum)	3.42
Plant J (talc)	7.75
Plant K (talc)	6.18
Plant L (clay)	
Inlet 1	4.53
Inlet 2	1.76
Plant M (clay)	
Inlet 1	5.24
Inlet 2	1.04

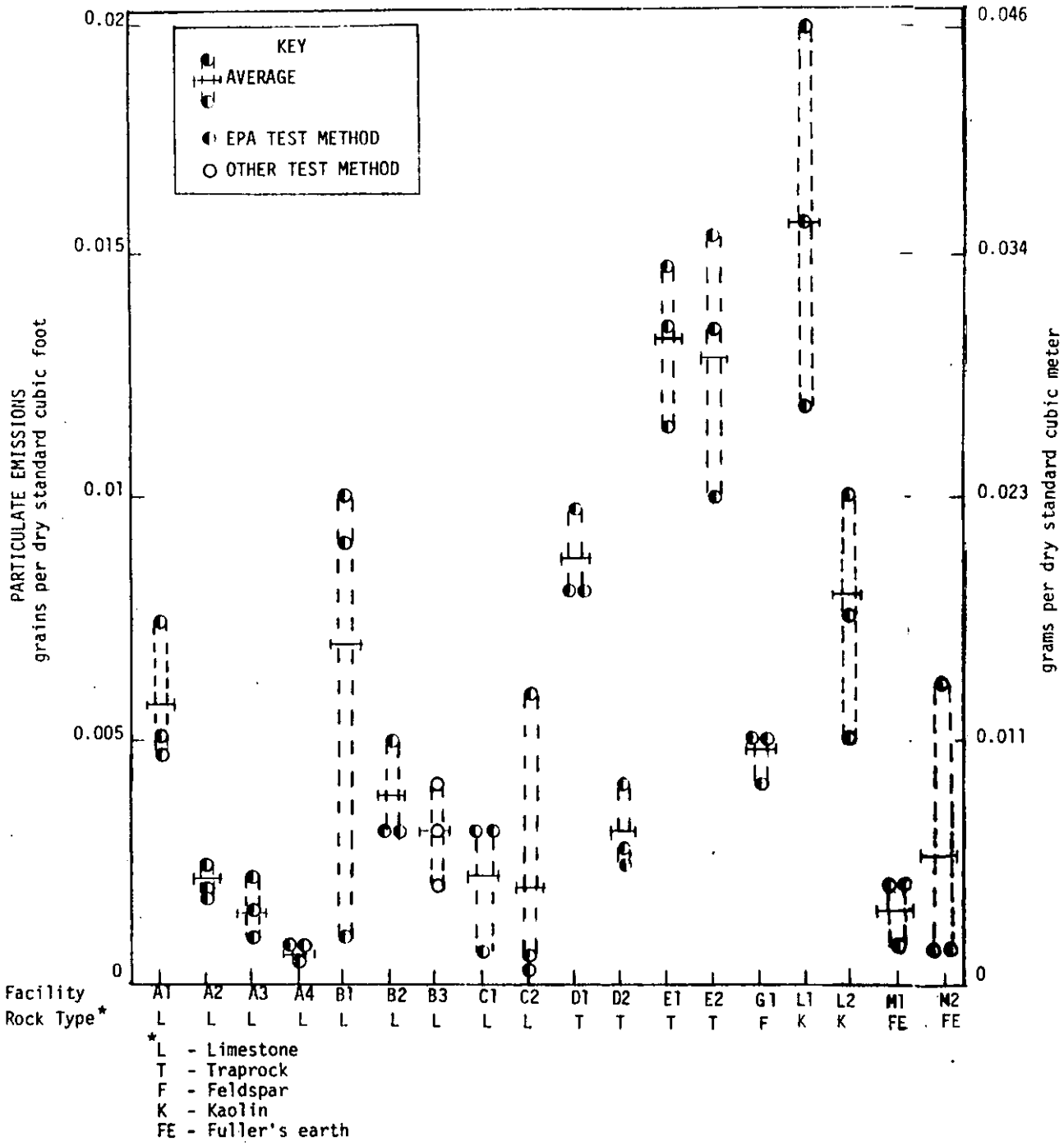

Figure 3.13 Particulate emissions from non-metallic mineral processing operations.

Observations for visible emissions were also made at hoods and enclosures to record the presence and opacity of emissions escaping capture. The results of these measurements are summarized in Table 3.5. In most instances, essentially no visible emissions were observed at adequately hooded or enclosed process facilities.

Of the 13 crushers for which visible emission measurements are reported, 10 were cone crushers handling either limestone, traprock, feldspar, or talc. The other three crushers were an impact crusher handling limestone and jaw crushers handling feldspar and talc. Except for one jaw crusher and one cone crusher, no visible emissions were observed from crushers for at least 97 percent of the time. The one cone crusher (plant B) had visible emissions for 10 percent of the time, but this crusher was identical to two other cone crushers tested at the same plant which had no visible emissions for 100 percent of the time. The jaw crusher (plant J) had visible emissions for 28 percent of the time but the percentage would have been lower if a cover plate had not been removed during part of the observation period.

In addition, the tests performed at plant B, which include the cone crusher exhibiting visible emissions for 10 percent of the time, were carried out while the plant was experiencing dry climatic conditions and problems with their water suppression system's pump. As with plant J, a cover plate at the primary crusher had been removed. The combination of these factors account for the high readings of visible emissions at the cone crusher and screening operations.

Visible emissions were observed at six grinding mills. All the mills except the pebble mill exhibited no visible emissions 99 percent of the time. (The vertical mill is a closed system and, therefore, would not have a fugitive discharge of dust except through leaks in the system). Visible emissions were observed from the other ball mills for 0 percent of the time and for the pebble mill for 7 percent of the time. Three visible emissions tests were conducted at the railcar bulk loading operation of a kaolin plant. For two tests, during which rectangular hatch railcars were loaded, visible emissions were observed for 2 and 6 percent of the time. Visible emissions were observed for 15 percent of the time during loading of a

TABLE 3.5 SUMMARY OF VISIBLE EMISSIONS MEASUREMENTS FROM FUGITIVE SOURCES CONTROLLED BY DRY COLLECTION SYSTEMS

Plant/Rock type processed		Date of test	Process facility	Accumulated observation time (minutes)	Accumulated emission time (minutes)	Percent of time with visible emissions
A	Crushed limestone	7/9/75	Baghouse discharge to conveyor	240	0	0
			Primary impact crusher discharge	240	4	1
			Conveyor transfer point	166	3	2
B	Crushed limestone	7/1/75	Scalping screen	287	45	15
			Surge bin	287	3	1
			Secondary cone crusher No. 1	231	23	10
			Secondary cone crusher No. 2	231	0	0
			Secondary cone crusher No. 3	231	0	0
			Hammer mill	287	0	0
			3-deck finishing screen (L)	107	4	4
			3-deck finishing screen (R)	107	0	0
		6/30/75	Two 3-deck finishing screens	120	86	72
D	Crushed stone	7/8/75	No. 1 tertiary gyrasphere cone crusher	170	0	0
			No. 2 tertiary gyrasphere cone crusher	170	0	0
			Secondary standard cone crusher	170	0	0
			Scalping screen	210	0	0
			Secondary (2-deck) sizing screen	210	0	0
			Secondary (3-deck) sizing screen	210	0	0
F	Traprock	8/26/76	Two tertiary crushers	65	0	0
			Four processing screens	180	0	0
			Conveyor transfer points	179	0	0

(continued)

TABLE 3.5 (continued)

Plant/Rock type processed		Date of test	Process facility	Accumulated observation time (minutes)	Accumulated emission time (minutes)	Percent of time with visible emissions
G	Feldspar	9/27/76	Conveyor transfer point No. 1	80	0	0
			Conveyor transfer point No. 2	87	0	0
			Primary crusher	60	1	2
			Secondary crusher	60	0	0
			Conveyor transfer point No. 4	84	0	0
			Ball mill (feed end)	60	0	0
			Ball mill (discharge end)	60	0	0
			Indoor transfer point No. 1	60	0	0
			Indoor transfer point No. 2	60	0	0
			Indoor bucket elevator	60	0	0
			Truck loading	13	0	0
			Rail car loading	32	5	15
H	Gypsum	10/27/76	Hammer mill	298	2	1
I	Mica	9/30/76	Bagging operation	60	0	0
J	Talc	10/21/76	Vertical mill	90	0	0
			Primary crusher	90	20	22
			Secondary crusher	150	4	3
			Bagger	150	13	9
			Pebble mill	90	6	7
N	Kaolin	12/7/78	Rail car loading			
			Test 1	144	17	12
			Test 2	99	2	2
			Test 3	154	9	6

"rake-back" railcar. The primary source of emissions was the topping of each compartment and the subsequent repositioning of the feed hose in the next compartment.

Visible emissions measurements are also reported for eight screens, seven conveyor transfer points, one bucket elevator, one product bin, and two baggers. Except for two screens at plant B, visible emissions were observed from these process facilities for periods ranging from 0 percent to 9 percent of the time. The remaining screens had visible emissions for 15 and 72 percent of the time. Both the screens were located at plant B. The reasons for the high readings were given in the discussion of the problems at plant B, above. The main dust source at one of the screens was mainly at the motor powering the screens.

3.4.3 Wet Dust Suppression Emissions Data

Due to the unconfined nature of emissions from facilities controlled by wet suppression techniques, the quantitative measurement of mass particulate emissions is not possible. Thus, no mass emission data are available which permit a quantitative comparison of the control capabilities of wet dust suppression versus particulate emission control techniques. Visible emission observations were conducted at six crushed stone and sand and gravel plants (plants F, P, Q, R, S, and T) using wet dust suppression techniques to control particulate emissions generated at plant process facilities. Emissions generated by 13 crushers, 14 screens, seven conveyor transfer points, one impact mill, and one storage bin were visually measured by EPA Methods 9 and 22. Plants R and T are portable crushing facilities. Plants P, Q, and T process crushed limestone, while plant F processes crushed traprock, and plant S processes crushed granite. Plant R is a sand and gravel processing plant.

The results of the tests for non-crushing sources (e.g., screens, transfer points, and storage bins) are summarized in Tables 3.6 and 3.7. These results indicate that visible emissions occur less than 10 percent of the time, and were generally less than 5 percent opacity when they did occur. The results of the tests for crushing sources from the best controlled fixed (plant S) and portable (plant R) plants are summarized

TABLE 3.6 SUMMARY OF VISIBLE EMISSIONS MEASUREMENTS FROM FUGITIVE NONCRUSHING SOURCES CONTROLLED BY WET SUPPRESSION (ACCORDING TO EPA METHOD 22)

Plant	Rock type processed	Date of test	Process facility	Accumulated observation time (minutes)	Accumulated emission time (minutes)[a]	Percent of time with visible emissions
P	Crushed limestone (F)[b]	10/02/79	Secondary screen	60	0	0
			Transfer point	60	<1	1
Q	Crushed limestone (F)	10/10/79	Three process screens	270	2	<1
R	Sand and Gravel (P)[c]	10/15/79	Three process screens	210	11	5
			Two transfer points	120	1	<1
S	Crushed granite (F)	10/23/79	Two process screens	240	10	4
			Two transfer points	240	<1	0
T	Crushed limestone (P)	12/29/79	Process screen	120	0	0
			Transfer point	120	3	2
			Storage bin	120	0	0
F	Crushed traprock (F)	8/26/76	Four process screens	180	0	0
			Transfer point	179	0	0

[a]Data from observer with highest readings.

[b](F) = Fixed plant.

[c](P) = Portable plant.

in Figures 3.14 to 3.18. The data are reported in six minute averaging of Method 9 data. For each testing set (approximately one hour), the results of the two observers simultaneously measuring visible emissions, are indicated by a solid and a dashed line. In spite of the fact that plant R is designated the best controlled portable crushing plant, the secondary crusher exceeded 15 percent opacity several times, according to one of the observers. This is attributed to the fact that during the test, there was no spray bar located near the crusher outlet. It is felt that had the spray bar for the crusher been relocated closer to the crusher than its present position some 1.5 meters (5 feet) from the crusher, emissions would have dropped below 15 percent opacity for all observer readings.

The positioning and number of spray bars in some of the tested plants may not have been adequate for effective emission control. Plant S, which was judged as the best-controlled plant based on the design and operation of its wet suppression system was at the time of the testing a newly constructed plant with the wet suppression system designed into the plant. Existing plants may encounter difficulties in retrofitting the spray bars in the proper locations due to space limitation or other factors. Therefore, the results from Plant S may not be representative of the effectiveness of wet suppression systems retrofitted to existing plants.

During the periods of observation at plant F, no visible emissions were observed at two crushers, four screens, and one conveyor transfer point. The two crushers were observed simultaneously for a period of 65 minutes. The four screens were observed simultaneously for three hours. The conveyor transfer point was observed for three hours.

Visible emission observations were also conducted at a feldspar crushing installation which had a wet dust suppression system to control particulate emissions generated by crushers, screens, and conveyor transfer points. During the observations the suppression system was used only intermittently, presumably because the ore had sufficient surface moisture from rains the previous day. During the periods of observation, essentially no visible emissions were observed. Surface moisture contents of the ore were 1.6 to 1.8 percent at the primary crusher discharge; 1.4 to 1.5 percent at the secondary crusher feed; and 1.0 percent at the secondary crusher discharge conveyor.

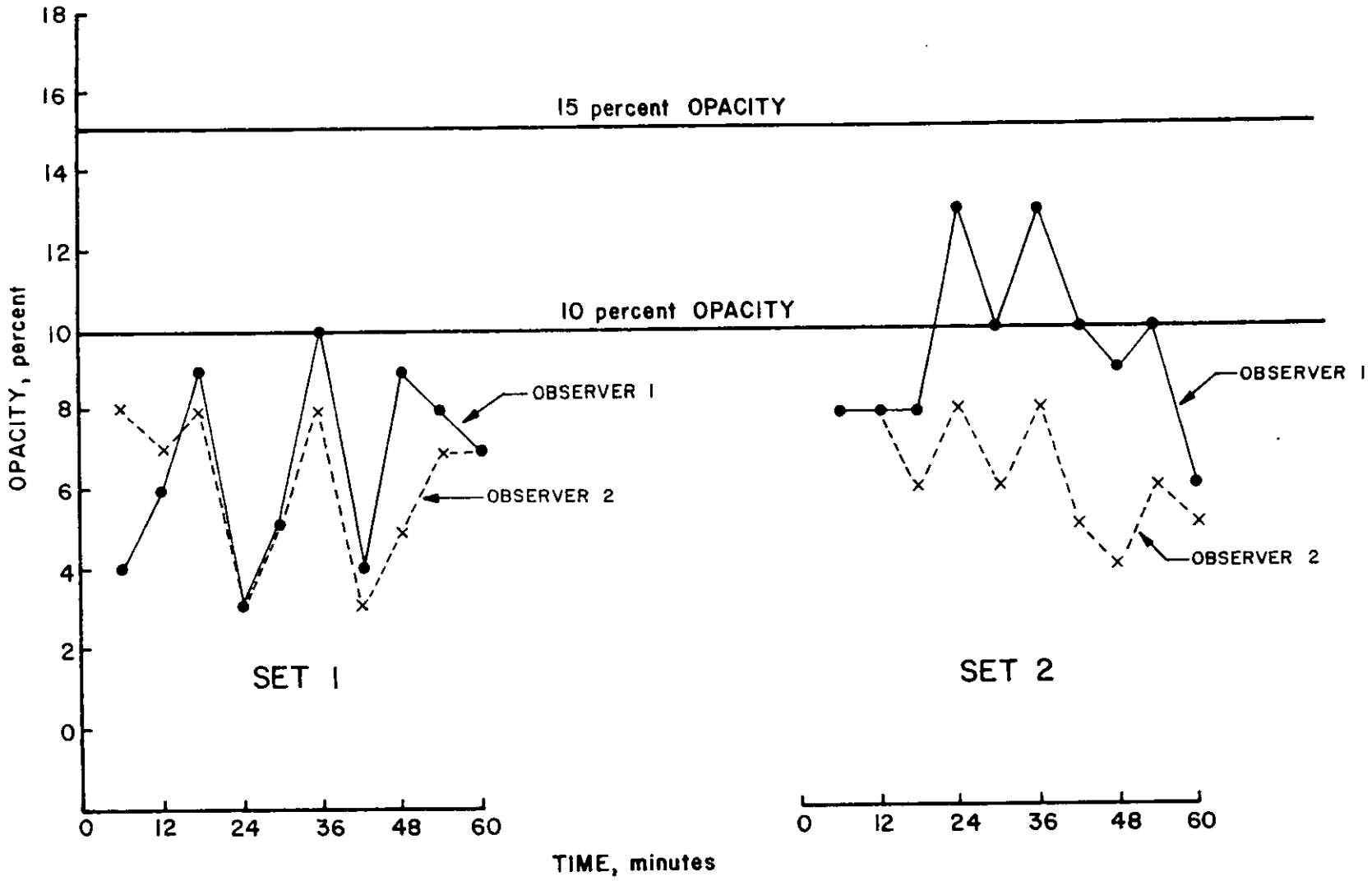

Figure 3.14 Summary of visible emission measurements from best controlled primary crushing source (portable - Plant R) by means of wet suppression (according to EPA Method 9).

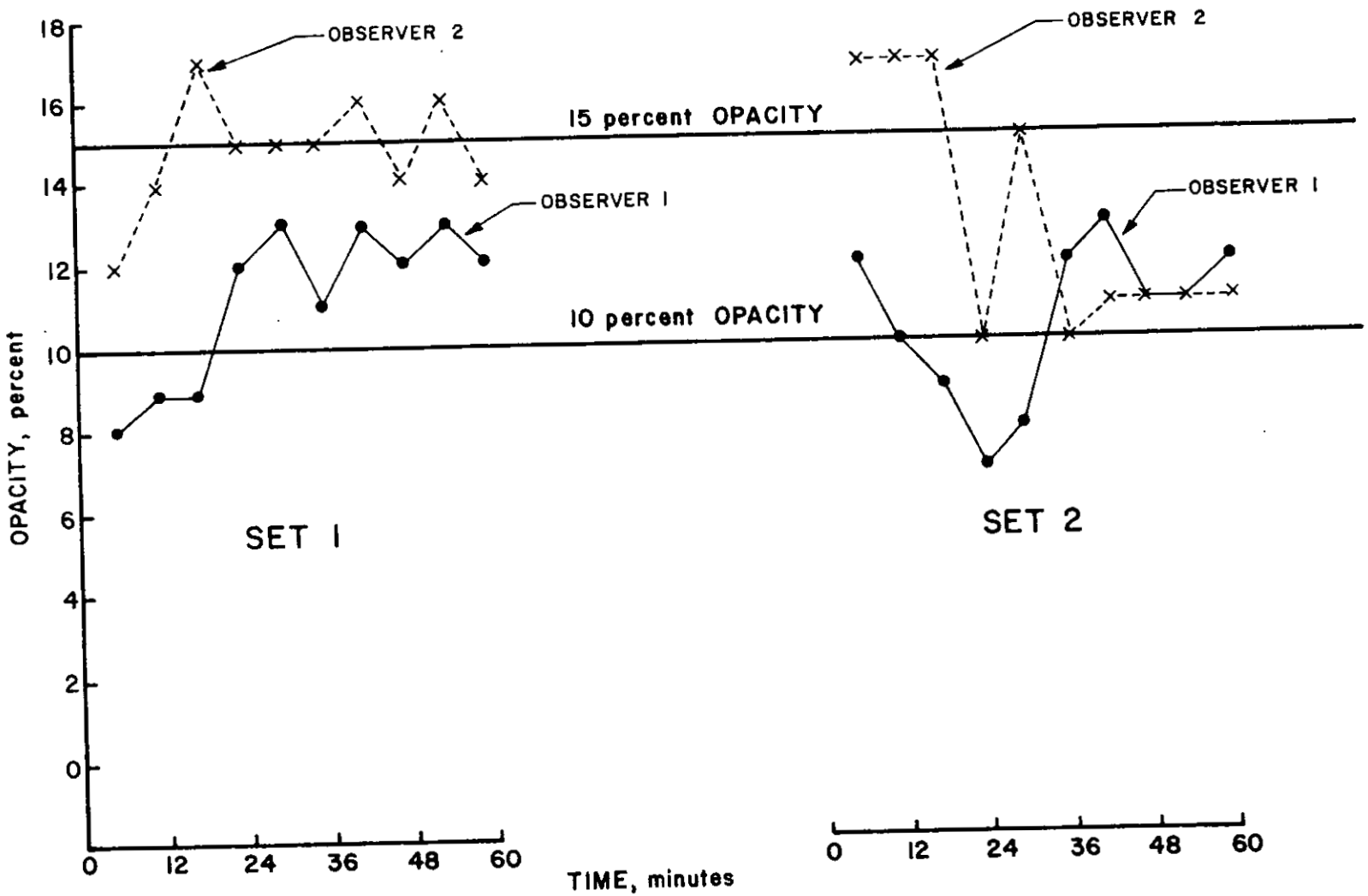

Figure 3.15 Summary of visible emission measurements from best controlled secondary crushing source (portable - Plant R) by means of wet suppression (according to EPA Method 9).

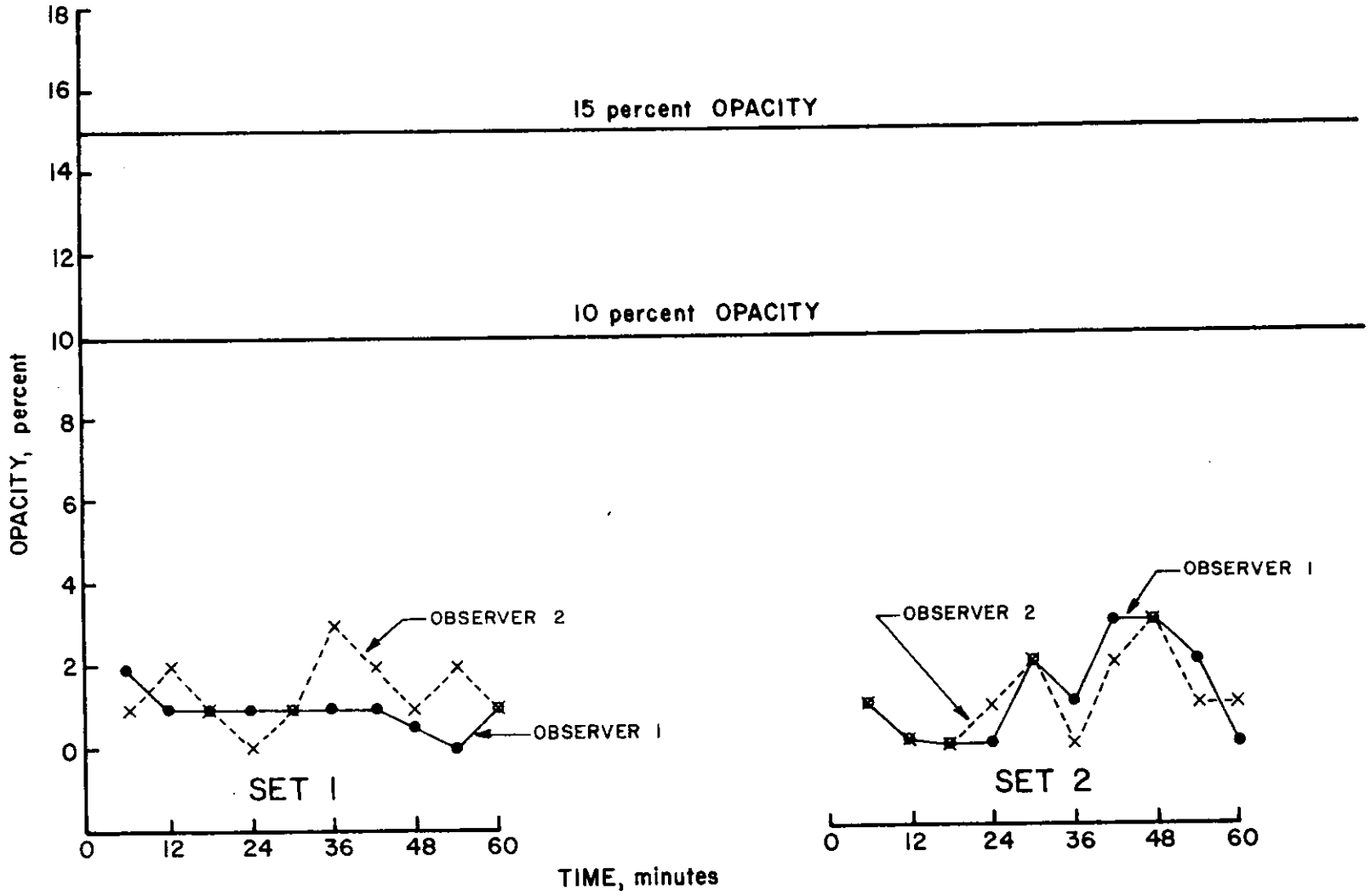

Figure 3.16 Summary of visible emission measurements from best controlled primary crushing source (fixed - Plant S) by means of wet suppression (according to EPA Method 9).

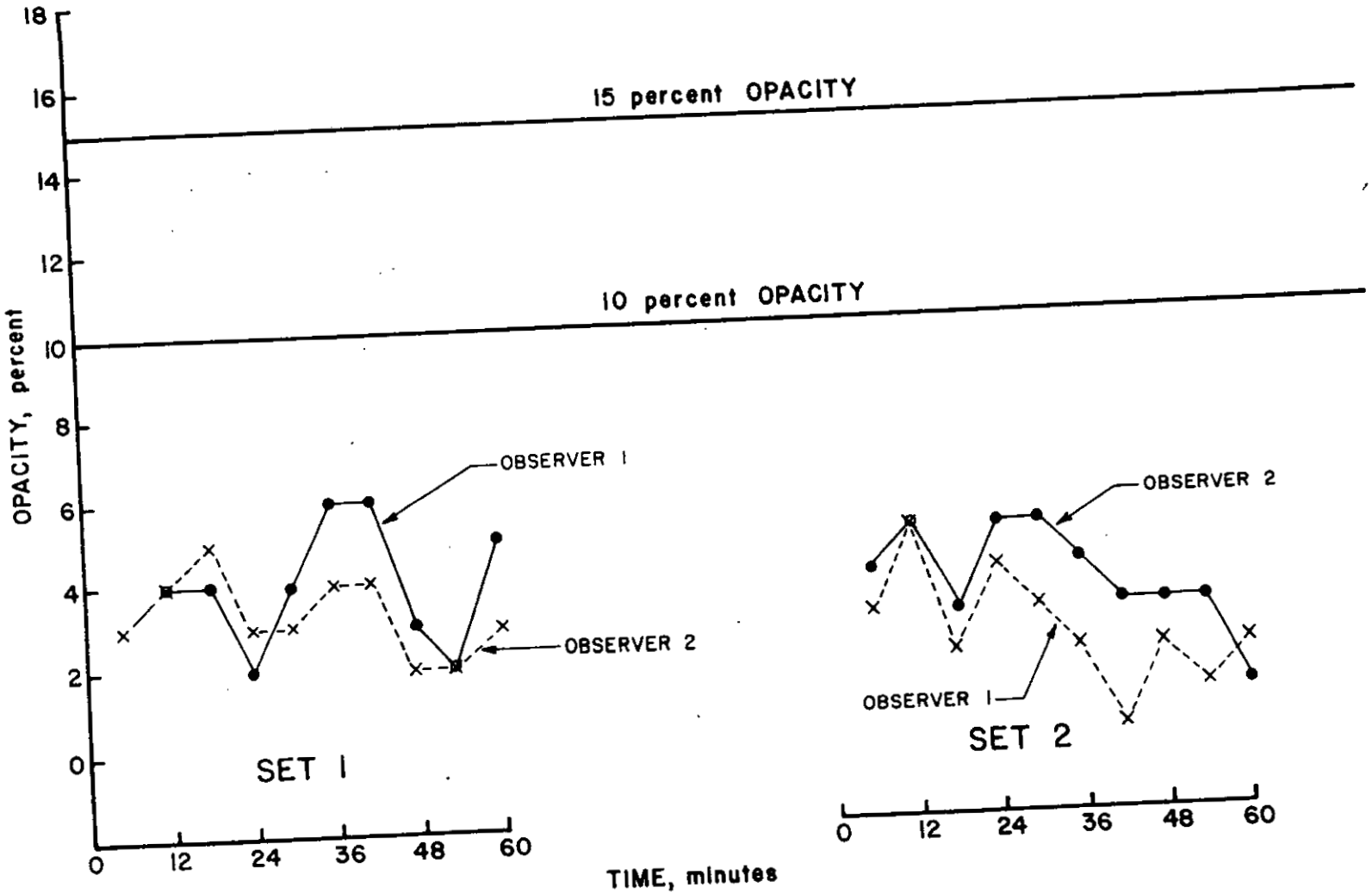

Figure 3.17 Summary of visible emission measurements from best controlled small secondary crusher (fixed - Plant S) by means of wet suppression (according to EPA Method 9).

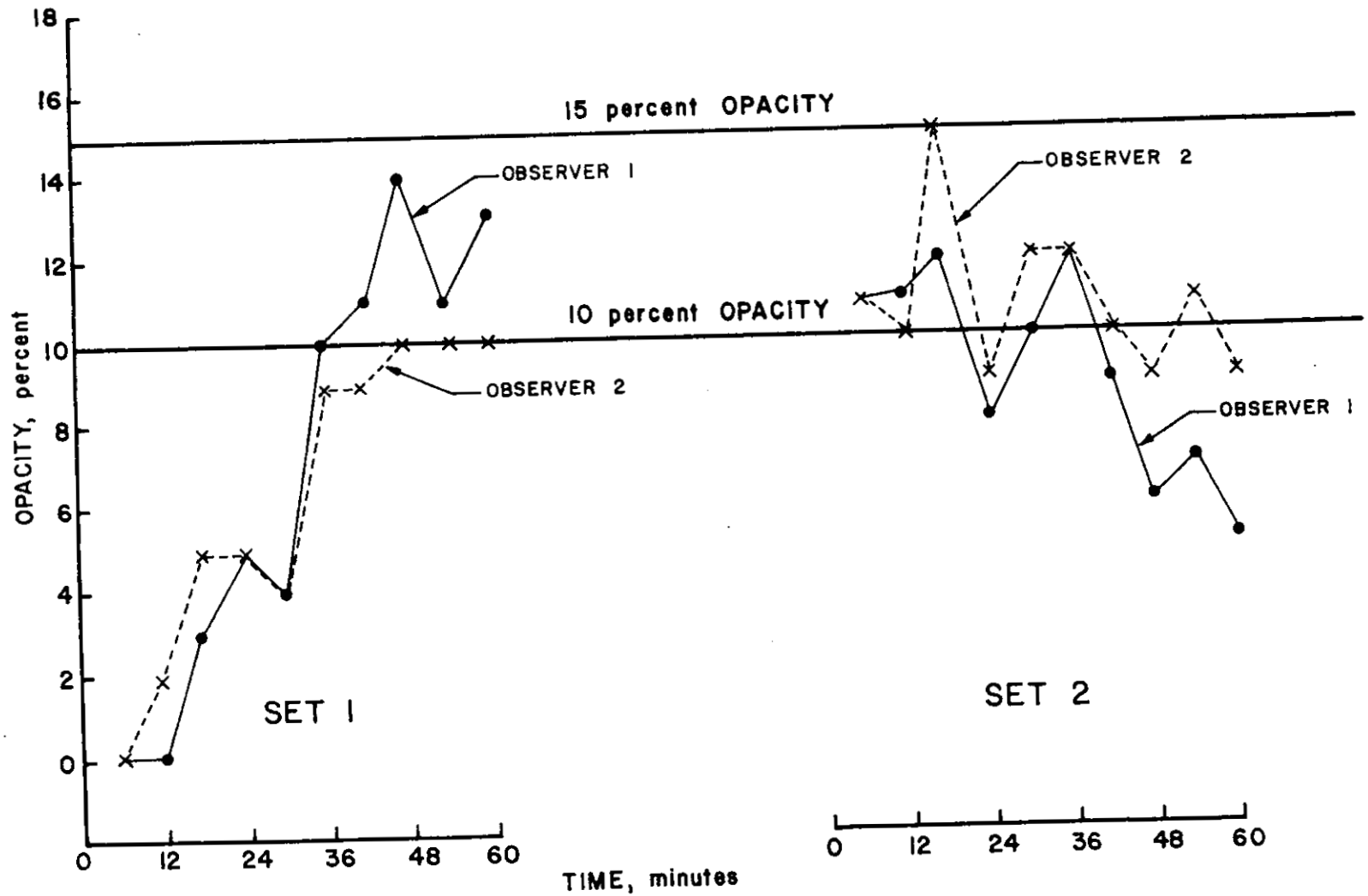

Figure 3.18 Summary of visible emission measurements from best controlled large secondary crushing source (fixed - Plant S) by means of wet suppression (according to EPA Method 9).

REFERENCES FOR CHAPTER 3

1. Standards Support and Environmental Impact Statement: An Investigation of the Best Systems of Emission Reduction for Quarrying and Plant Process Facilities in the Crushed- and Broken-Stone Industry (Draft). U.S. Environmental Protection Agency, Office of Air Quality Planning and Standards. Research Triangle Park, North Carolina. August 1975.

2. "Dust Control In Mining, Tunneling, and Quarrying in the United States, 1961 through 1967," U.S. Bureau of Mines information circular, No. IC8407. March 1969. pp 11-12.

3. Control Techniques for Particulate Air Pollutants. U.S. Environmental Protection Agency, Publication No. AP-51, January 1969.

4. Technical Guidance for Control of Industrial Process Fugitive Particulate Emissions. U.S. Environmental Protection Agency, Research Triangle Park, North Carolina. EPA-450/3-77-010. March 1977.

5. Minnick, J.L. "Control of Particulate Emissions from Lime Plants - A Survey," Journal of the Air Pollution Control Association, Volume 21, No. 4. April 1971.

6. Chiaro, D.A. "Significant Operating Benefits Reported from Cement Quarry Dust Control Program," Pit and Quarry. January 1971.

7. "Conrock Controls Fugitive Dust Efficiently and Economically," Pit and Quarry. September 1972. pp 127-128.

8. Investigation of Fugitive Dust Volume I - Sources, Emissions and Control. Prepared by PEDCo Environmental, Inc., for the U.S. Environmental Protection Agency. Contract No. 68-02-0044, Task 9. EPA-450/3-74-036a. June 1974.

9. "Rock Products Reference File - Dust Suppression," Rock Products, May 1972, p. 156.

10. Weant, G.E., "Characterization of Particulate Emissions from the Stone-Processing Industry," prepared by Research Triangle Institute for the U.S. Environmental Protection Agency, Contact No. 68-02-0607-10 May 1975, p. 64.

11. Johnson-March Corporation, Product Literature on Chem-Jet Dust Suppression System, 1971.

12. Telecon. Eddinger, James, EPA/ISB with Casteline, John, Johnson-March Corporation. March 29, 1982.

13. Reference 11.

14. Hankin, M., "Is Dust the Stone Industry's Next Major Problem," Rock Products, April 1967, p. 84.

15. "Air Pollution Control at Crushed Stone Operations," National Crushed Stone Association, February 1976, page V-4.

16. Reference 14, p. 114.

17. Reference 15, page V-5.

18. Anderson, D.M., "Dust Control Design by the Air Induction Technique," Industrial Medicine and Surgery, February 1964, p. 3.

19. Telecon. Vervaert, Alfred. EPA:ISB with McCorkel, Joe, Aggregates Equipment Incorporated, January 28, 1975.

20. Reference 19.

21. Reference 19.

22. American Conference of Governmental Industrial Hygienists, "Industrial Ventilation, A Manual of Recommended Practice," 11th Edition, 1970, p. 5-33.

23. Reference 14, p. 2.

24. Reference 22, p. 5-32.

25. Reference 22, p. 5-33.

26. Reference 22, p. 5-31.

27. Reference 22, p. 5-28.

28. Reference 3, p. 46-47.

29. Source Testing Report - Kentucky Stone Company, Russellville, Kentucky. Prepared by Engineering - Science, Incorporated, EPA Report No. 75-STN-3.

30. Emission Study at a Feldspar Crushing and Grinding Facility. Prepared by Clayton Environmental Consultants, Incorporated, EPA Report Number 76-NMM-1.

31. Reference 3.

32. Air Pollution Engineering Manual, Second Edition. U.S. Environmental Protection Agency, Publication AP-40. p. 128, May 1973.

33. Reference 14, p. 104.

34. Emission Characteristics of the Non-metallic Minerals Industry. Prepared by Industrial Gas Cleaning Institute, EPA Contract No. 68-02-1473, Task No. 25, July 1977.

35. Reference 3.

36. Billings, C.E., and J. Wilder, "Handbook of Fabric Filter Technology," Fabric Filter System Study (Volume I). GCA Corporation, GCA/Technology Division. Bedford, Massachusetts, Contract No. EPA 22-69-38. December 1970.

4.0 COSTS OF EMISSION CONTROL TECHNOLOGY

This chapter presents estimates of the costs of applying emission control technology in the 17 industries studied in this document. The costs of controlling process emission sources and fugitive emission sources are included. Process sources include: crushers, grinders, screens, transfer points, storage bin loading operations, and bagging machines. Fugitive emission sources include open conveyors, storage piles, and blasting, loading, and hauling operations. Costs are presented for dry collection (baghouses), wet suppression, and combination systems.

4.1 MODEL PLANTS

A model plant approach is used in this document to estimate and present the cost of applying emission control technology to non-metallic mineral processing plants. Costs have been estimated and presented below for nine different model plants. These plants differ in the operations used, the process capacities, and whether the plant is fixed or portable. The model plants are parametric descriptions of the types of plants that for the purpose of subsequent analysis are considered representative of plants currently operating within the industries.

The nine model plants can be classified into three major types of varying capacity according to the type of operation and whether the plant is portable or fixed.

The first type of model plant consists of crushing operations only and is fixed. The major pieces of process equipment in this type of plant are three crushers, three screens, several transfer points, conveyor belts and storage bin loading equipment. Four model plants were developed for this type plant: 68, 135, 270 and 540 megagrams per hour (75, 150, 300, and 600 tons per hour). Table 4.1 presents the plant parameters for each of the four model plant sizes of this type of plant.

TABEL 4.1 PARAMETERS FOR FIXED CRUSHING MODEL PLANTS (PLANT TYPE 1)

Item	68 Mg/hour (75 TPH)			135 Mg/hour (150 TPH)		
	Size	Energy requirement HP	Gas vol. CFM	Size	Energy requirement HP	Gas vol. CFM
Primary crusher	15" x 38" jaw	75	1,000	27" x 42" jaw	150	2,500
Primary screen	6' x 10'	15	3,000	6' x 12'	20	3,600
Secondary crusher	13" x 59" gyratory	70	1,325	4' cone	150	3,250
Secondary screen	6' x 10'	15	3,000	6' x 12'	20	3,600
Tertiary crusher	10" x 39" hammermill	200	1,350	13" x 59" gyratory	125	1,325
Tertiary screen	6' x 10'	15	3,000	6' x 12'	20	3,600
Feeder		7.5			7.5	
Storage bin	(2)		1,000	(3)		1,500
Conveyors	24" (1) 18" (2)	7 13		30" (1) 24" (2)	12 19.5	
Transfer points	24" (1) 18" (4)		1,000 3,000	24" (3) 30" (2)		3,000 2,500
TOTAL		417.5	17,675		524	24,875

TABLE 4.1 (continued)

Item	270 Mg/hour (300 TPH) Size	Energy requirement HP	Gas vol. CFM	540 Mg/hour (600 TPH) Size	Energy requirement HP	Gas vol. CFM
Primary crusher	35" x 46" jaw	200	3,500	50" x 60" jaw	300	4,660
Primary screen	6' x 12'	20	3,600	6' x 12'	20	3,600
Secondary crusher	4½ cone	175	3,660	5½ cone 5½ cone	200 200	6,170 6,170
Secondary screen	6' x 16'	20	4,800	6' x 16'	20	4,800
Tertiary crusher	4' cone 4' cone	150 150	3,260 3,260	5½ cone 5½ cone	200 200	6,170 6,170
Tertiary screen	7' x 20'	30	7,000	7' x 20' 7' x 20'	30 30	7,000 7,000
Feeder		10			20	
Storage bin	(5)		2,500	(5)		2,500
Conveyors	36" (2) 30" (3) 24" (3)	29 48 13		36" (3) 30" (4)	113 59	
Transfer points	36" (3) 30" (4) 24" (7)		4,500 5,000 7,000	36" (3) 30" (7)		9,000 8,750
TOTAL		845	48,080		1,392	71,990

References:
- Estimating Dust Control Costs for Crushed Stone Plants, Bureau of Mines Report, Rock Products, April 1975.
- Mineral Processing Flowsheets, Denver Equipment Company, Second Edition.
- Cedarapids Reference Book, Iowa Manufacturing Company, Ninth Pocket Edition.
- Background Information for the Non-Metallic Minerals Industry, PEDCo Environmental Specialists, EPA Contract No. 68-02-1321, Task No. 44, August 31, 1976.
- Chemical Engineers Handbook, 3rd Edition, Perry, Robert H. (editor), McGraw Hill.
- Pit and Quarry Handbook and Purchasing Guide, 63rd Edition, Pit and Quarry Publications, Incorporated, 1970.
- "Industrial Ventilation, A Manual of Recommended Practice, 11th Edition, American Conference of Government Industrial Hygienists, 1970.
- Smith Engineering Works, Product Literature on Telsmith Equipment for Mines ... Quarries and Gravel Pits, Bulletin 266 B.

The second type model plant consists of crushing and grinding operations and is also fixed. This type model plant contains the same pieces of process equipment as the first type model plant plus a grinder, another screen, additional transfer points, and a bagging machine. Model plants were developed for four capacity sizes: 9, 23, 135, and 270 megagrams per hour (10, 25, 150, and 300 tons per hour). Table 4.2 lists the model plant parameters for each size plant of this type.

The third type model plant is a portable plant consisting of crushing operations only. The major pieces of process equipment are a primary crusher, a secondary crusher and associated screen, a final screen and conveyor belts. Only one size portable model plant, with a capacity of 135 megagrams per hour (150 tons per hour), was developed. Table 4.3 lists the model plant parameters for this size portable plant.

The three model plant types and all of the various plant sizes are not applicable to each of the 17 industries studied here. Table 4.4 shows which type model plant should be used for each industry, and the range and typical plant sizes actually existing in each industry.

4.2 COST OF CONTROLLING PROCESS SOURCES

4.2.1 Introduction

This section discusses the cost of controlling emissions from process sources by dry collection (fabric filters), wet suppression methods, and a combination of the two methods. Dry collection involves hooding or enclosing dust-producing points and exhausting emissions to a collection device. Wet dust suppression consists of introducing moisture into the material flow to prevent fine particulate matter from becoming airborne. Combination systems apply both methods at different stages throughout the process. All control costs have been based on technical parameters associated with the control system used. These parameters are listed in Table 4.5.

The model plant costs do not reflect the costs for any specific plant, but are estimates which are sufficiently accurate for the purposes of this type of analysis. The costs of control presented in this chapter are for the installation of control systems at new plants. As noted in Section 3.3.4, there are increased costs associated with the retrofit installation of a

TABLE 4.2 PARAMETERS FOR FIXED CRUSHING AND GRINDING MODEL PLANTS (PLANT TYPE 2)

Item	9.1 Mg/hour (10 TPH)			23 Mg/hour (25 TPH)		
	Size	Energy requirement HP	Gas vol. CFM	Size	Energy requirement HP	Gas vol. CFM
Primary crusher	10" x 21" jaw	35	375	10" x 30" jaw	60	525
Primary screen	3' x 4'	2	600	3' x 8'	5	1,200
Secondary crusher	2' cone	25	2,000	13" x 59" gyratory	30	1,325
Secondary screen	3' x 4'	5	600	3' x 8'	5	1,200
Tertiary crusher	24" x 30" roll	40	1,250	24" x 30" roll	40	1,250
Tertiary screen	3' x 4'	5	600	3' x 8'	5	1,200
Feeder		5			7.5	
Storage bin	(2)		1,000	(2)		1,000
Conveyors	18" (3)	20		18" (3)	20	
Transfer points	18" (5)		3,750	18" (5)		3,750
Grinder system	6' x 8' ball mill	150	4,000	8' x 7' ball mill	300	4,700
TOTAL		287	14,175		472.5	16,150

TABLE 4.2 (continued)

Item	135 Mg/hour (150 TPH) Size	Energy requirement HP	Gas vol. CFM	270 Mg/hour (300 TPH) Size	Energy requirement HP	Gas vol. CFM
Primary crusher	27" x 42" jaw	150	2,500	35" x 46" jaw	200	3,500
Primary screen	6' x 12'	20	3,600	6' x 12'	20	3,600
Secondary crusher	4' cone	150	3,250	4½ cone	175	3,660
Secondary screen	6' x 12'	20	3,600	6' x 16'	20	4,800
Tertiary crusher	13" x 59" gyratory	125	1,325	4' cone 4' cone	150 150	3,260 3,260
Tertiary screen	6' x 12'	20	3,600	7' x 20'	30	7,000
Feeder		7.5			10	
Storage bin	(3)		1,500	(5)		2,500
Conveyors	30" (1) 24" (2)	12 19.5		36" (2) 30" (3) 24" (3)	29 48 13	
Transfer points	24" (3) 30" (2)		3,000 2,500	36" (3) 30" (4) 24" (7)		4,500 5,000 7,000
Grinder system	10' x 12' (2) ball mill	1,600	11,300	10' x 12' (4) ball mill	3,200	22,600
TOTAL		2,124	36,175		4,045	70,680

References:
- Estimating Dust Control Costs for Crushed Stone Plants, Bureau of Mines Report, Rock Products, April 1975.
- Mineral Processing Flowsheets, Denver Equipment Company, Second Edition.
- Cedarapids Reference Book, Iowa Manufacturing Company, Ninth Pocket Edition.
- Background Information for the Non-Metallic Minerals Industry, PEDCo Environmental Specialists, EPA Contract No. 68-02-1321, Task No. 44, August 31, 1976.
- Chemical Engineers Handbook, 3rd Edition, Perry, Robert H. (editor), McGraw Hill.
- Pit and Quarry Handbook and Purchasing Guide, 63rd Edition, Pit and Quarry Publications, Incorporated, 1970.
- "Industrial Ventilation, A Manual of Recommended Practice, 11th Edition, American Conference of Government Industrial Hygienists, 1970.
- Smith Engineering Works, Product Literature on Telsmith Equipment for Mines ... Quarries and Gravel Pits, Bulletin 266 B.

TABLE 4.3 PARAMETERS FOR PORTABLE CRUSHING MODEL PLANT (PLANT TYPE 3)
135 Mg/hour (150 tons/hour)

Item	Size[a]	Energy requirement,[b]	Gas volume,[c]
Primary crusher	91 - 363 (100 - 400)	74.6 (100)	99 (3,500)
Secondary crusher	181 - 272 (200 - 300)	93.3 (125)	99 (3,500)
Secondary screen	45 - 181 (50 - 200)	14.9 (20)	142 (5,000)
Final screen	45 - 181 (50 - 200)	14.9 (20)	142 (5,000)

[a]Given in megagrams per hour with tons per hour in parenthesis.

[b]Given in kilowatts per hour with horsepower in parenthesis.

[c]Given in cubic meters per minute with actual cubic feet per minute in parenthesis.

TABLE 4.4 PLANT SIZES FOR NON-METALLIC MINERALS INDUSTRY

(Metric units)

Industry	Plant model used*	Range (Mg/hr)	Typical size (Mg/hr)	Model plant sizes pertinent to the industry (Mg/hr)
Crushed & Broken Stone	1	-	272	68, 135, 270, 540
Crushed & Broken Stone	3	-	135	135
Sand & Gravel	1	14 - 2,177	272	68, 135, 270, 540
Sand & Gravel	3	-	135	135
Clay	2	4 - 136	23	9.1, 23, 68, 135
Rock Salt	1	- 753	68	23, 68, 135, 270, 540
Gypsum	2	-	23	9.1, 23, 68
Pumice	2	5 - 30	9	9.1, 23, 68
Gilsonite	2	-	9	9.1, 23, 68
Talc	2	5 - 18	9	9.1, 23
Boron	2	31 - 385	272	23, 68, 135, 270, 540
Barite	2	9 - 45	9	9.1, 23, 68
Fluorspar	2	- 23	9	9.1, 23
Feldspar	2	5 - 23	9	9.1, 23
Diatomite	2	8 - 60	23	9.1, 23, 68
Perlite	1	15 - 54	23	9.1, 23, 68
Vermiculite	1	68 - 272	68	68, 135, 270
Mica	2	-	9	9.1, 23
Kyanite	2	-	9	9.1, 23, 68

*Model Plant Type 1 - Fixed crushing plant.
Model Plant Type 2 - Fixed crushing and grinding plant.
Model Plant Type 3 - Portable crushing plant.

TABLE 4.4 PLANT SIZES FOR NON-METALLIC MINERALS INDUSTRY

(English units)

Industry	Plant model used*	Range (TPH)	Typical size (TPH)	Model plant sizes pertinent to the industry (TPH)
Crushed and Broken Stone	1	-	300	75, 150, 300, 600
Crushed and Broken Stone	3	-	150	150
Sand & Gravel	1	15 - 2,400	300	75, 150, 300, 600
Sand & Gravel	3	-	150	150
Clay	2	4 - 150	25	10, 25, 150
Rock Salt	1	- 830	75	75, 150, 300, 600
Gypsum	2	-	25	10, 25
Pumice	2	5 - 33	10	10, 25
Gilsonite	2	-	10	10, 25
Talc	2	6 - 20	10	10, 25
Boron	2	34 - 425	300	25, 150, 300
Barite	2	10 - 50	10	10, 25
Fluorspar	2	- 25	10	10, 25
Feldspar	2	5 - 25	10	10, 25
Diatomite	2	9 - 66	25	10, 25
Perlite	1	16 - 60	25	75
Vermiculite	1	75 - 300	75	75, 150, 300
Mica	2	-	10	10, 25
Kyanite	2	-	10	10, 25

*Model Plant Type 1 - Fixed crushing plant.
Model Plant Type 2 - Fixed crushing and grinding plant.
Model Plant Type 3 - Portable crushing plant.

TABLE 4.5 TECHNICAL PARAMETERS USED IN DEVELOPING CONTROL SYSTEMS COSTS[a]

Parameter	Value
1. Temperature	21°C (70°F)
2. Volumetric flowrate	(see Tables 4.7 to 4.15, 4.20)
3. Moisture content	2 percent (by volume)
4. Particulate loadings:	
Inlet	10.8 g/Nm^3 (4.7 grains/scf)
Outlet	0.046 g/Nm^3 (0.02 grains/scf)
5. Plant capacities[b]	9.1, 23, 68, 135, 270, and 540 Mg/hr (10, 25, 75, 150, 300, and 600 tons/hr)
6. Operating factors:	
a. Fixed plants	
Crushing operations	2,000 hours/year
Grinding operations	8,400 hours/year
b. Portable plants	
Crushing operations	1,250 hours/year

[a]Reference 1.

[b]These capacities represent the sizes typical of generalized model plants. However, for a particular industry, only some of these sizes are applicable.

control system at an existing plant. These increased costs may include such items as increased engineering and design requirements, increased pumping requirements for a wet suppression system, longer duct runs for a dry collection system, and a related increase in utility costs. Most of these costs are associated with a restriction of available space for the retrofit installation at an existing plant. Estimating actual costs for a specific plant requires a detailed engineering study.

The model plant costs have been based primarily on data available from an EPA contractor (Industrial Gas Cleaning Institute), who had in turn obtained control system costs from vendors of air pollution control equipment.[2] These costs have been supplemented by a compendium of costs for selected air pollution control systems.[3] The monitoring costs have been obtained from an equipment vendor.[4]

Two cost parameters have been developed: installed capital cost and total annualized cost. The installed capital costs for each emission control system include the purchased costs of the major and auxiliary equipment, costs for site preparation and equipment installation, and engineering design costs. No attempt has been made to include costs for research and development, possible lost production during equipment installation, or losses during startup. All capital costs in this section reflect July 1980 prices for equipment, installation materials, and installation labor. These costs were updated to July 1980 using the Chemical Engineering plant cost index. The costs which were updated were originally dated between 1976 and 1979.

The total annualized costs consist of direct operating costs and annualized capital charges. Direct operating costs include fixed and variable annual costs, such as:

- Labor and materials needed to operate control equipment;
- Maintenance labor and materials;
- Utilities, such as electric power;
- Replacement parts;
- Dust disposal (where applicable).

The dust disposal costs apply only to dry collection systems (fabric filters) used to control crushing operations when no grinding operations are employed. A unit cost of $6.04/Mg ($5.50/ton) is used to cover the costs of trucking the collected particulate to a disposal point on-site (e.g., the mine).[5]

In those plants that have both crushing and grinding operations, the dust collected by the crusher baghouses is conveyed to the grinder, while the particulate captured by the grinder fabric filter is recycled as finished product. In this case, it has been assumed that the dust recovery credit offsets the cost of recycling. Therefore, neither a dust credit nor a cost is included in the direct operating cost.

The annualized capital charges account for depreciation, interest, administrative overhead, property taxes, and insurance. The depreciation and interest have been computed by use of a capital recovery factor, the value of which depends on the depreciable life of the control system and the interest rate. An annual interest rate of 10 percent and a 20 year depreciable life have been assumed. Administrative overhead, taxes, and insurance have been fixed at an additional 4 percent of the installed capital cost per year. The annual cost factors used in this section are listed in Table 4.6.

Finally, the total annualized cost is obtained simply by adding the direct operating cost to the annualized capital charges.

4.2.2 Cost of Dry Collection

As discussed in section 4.1, three model plant types have been developed for costing purposes: a fixed plant with crushing operations only (Model Plant 1), another fixed plant with both crushing and grinding operations (Model Plant 2), and a portable plant with crushing operations only (Model Plant 3).

The size and number of fabric filter systems required to control the particulate emissions vary according to the mineral plant capacity and configuration. For example, only two moderately-sized baghouses are required to control the crushing and grinding operations at the 9.1 Mg/hour (10 tons/hour) model plant, while three much larger fabric filters are needed at the 270 Mg/hour (300 tons/hour) model.

TABLE 4.6 ANNUALIZED COST PARAMETERS[a]

Parameter	Value
1. Operating labor	$14/man-hour[b]
2. Maintenance labor	50 percent of operating labor (fabric filters) 40 man-hours/year (opacity monitors)
3. Maintenance materials	2 percent of maintenance labor (fabric filters) 1 percent of total installed cost (opacity monitors)
4. Utilities:	
Electric power	$0.04/kw-hr[b]
5. Replacement parts:	
Polypropylene bags	$9.60/m^2 ($0.90/ft^2)[b]
6. Dust disposal	$6.04/Mg ($5.50/ton)[b]
7. Depreciation and interest	11.75 percent of total installed cost (fabric filters) 16.28 percent of total installed cost (opacity monitors)
8. Taxes, insurance, and administrative charges	4.0 percent of total installed cost

[a]References 2, 3, 4, and EPA estimates.

[b]Updated to July 1980 using Chemical Engineering cost index.

Each of these fabric filter systems consists of a pulse-jet baghouse with polypropylene bags, fan and fan motor, dust hopper, screw conveyor, ductwork, and stack.

Tables 4.7 through 4.10 list installed capital, direct operating, annualized capital, and total annualized costs for each of the fabric filter systems installed in Model Plant 1. The four plant sizes for which costs have been developed cover the range in capacities applicable to the various mineral industries.

In Table 4.7 and 4.8, the first column lists the technical or cost parameter in question. The data pertaining to the fabric filter are listed in the second column. However, in each of Tables 4.9 and 4.10, more than one fabric filter is needed to control the crushing operation. The data for these fabric filters appears in the middle columns while the right-hand column lists the totals for the model plant.

Similarly, Tables 4.11 through 4.14 contain cost data for Model Plant 2. The costs are itemized according to the fabric filters controlling the crusher and grinder operations, respectively. Again, the right-hand column lists data for the total model plant. Note that the installed capital costs and annualized capital charges for the crusher baghouse(s) are the same as in the corresponding tables for Model Plant 1. However, because no dust disposal costs are included with Model Plant 2, the direct operating costs, and the total annualized costs, are lower.

In these tables, the total annualized cost has been expressed in two ways: dollars/year and dollars/megagram of product. The latter expression is the quotient of the total annualized cost and the annual production rate, based, in turn, on the operating factor. As Table 4.5 indicates, crushing operations (i.e., Model Plant 1) are assigned an operating factor of 2,000 hours/year, while with grinding operations, 8,400 hours/year has been used. For Model Plant 2, where both crushing and grinding operations are employed, 8,400 hours/year is used as the operating factor, solely for the purpose of computing the unit annualized costs. For Model Plant 3, which is a portable plant with crushing operations only, 1,250 hours/year has been used as the operating factor.

TABLE 4.7 FABRIC FILTER COSTS FOR PLANT TYPE 1: 68 Mg/hour (75 tons/hour) CAPACITY[a]

Parameter	Value[c]
Gas flowrate, m^3/min (ACFM)	504 (17,800)
Installed capital cost, $	130,000
Direct operating cost, $/yr	11,550
Annualized capital charges, $/yr	20,600
Total annualized cost, $/yr	32,150
$/Mg product[b]	0.24
Cost effectiveness, $/Mg particulate removed[b]	49.8

[a]References 1, 2, 3, 5.

[b]Quotients are based on 2,000 hours/year operating factor.

[c]Costs are updated to July 1980 using Chemical Engineering cost index.

TABLE 4.8 FABRIC FILTER COSTS FOR PLANT TYPE 1: 135 Mg/hour (150 tons/hour) CAPACITY[a]

Parameter	Value[c]
Gas flowrate, m^3/min (ACFM)	708 (25,000)
Installed capital cost, $	168,000
Direct operating cost, $/yr	16,300
Annualized capital charges, $/yr	26,400
Total annualized cost, $/yr	42,700
$/Mg product[b]	0.16
Cost effectiveness, $/Mg particulate removed[b]	46.7

[a]References 1, 2, 3, 5.

[b]Quotients are based on 2,000 hours/year operating factor.

[c]Costs are updated to July 1980 using Chemical Engineering cost index.

TABLE 4.9 FABRIC FILTER COSTS FOR PLANT TYPE 1: 270 Mg/hour (300 tons/hour) CAPACITY[a]

Parameter	Value[c]		Total
	Fabric filter 1	Fabric filter 2	
Gas flowrate, m^3/min (ACFM)	1,130 (40,000)	226 (8,000)	1,360 (48,000)
Installed capital cost, $	221,000	69,000	290,000
Direct operating cost, $/yr	25,500	5,100	30,600
Annualized capital charges, $/yr	34,700	10,800	45,500
Total annualized cost, $/yr	60,200	15,900	76,100
$/Mg product[b]	0.11	0.029	0.14
Cost-effectiveness, $/Mg particulate removed[b]	41.0	54.8	43.2

[a]References 1, 2, 3, 5.

[b]Quotients are based on 2,000 hours/year operating factor.

[c]Costs are updated to July 1980 using Chemical Engineering cost index.

TABLE 4.10 FABRIC FILTER COSTS FOR PLANT TYPE 1: 540 Mg/hour (600 tons/hour) CAPACITY[a]

Parameter	Value[c] Fabric filter 1	Fabric filter 2	Fabric filter 3	Total
Gas flowrate, m^3/min (ACFM)	255 (9,000)	906 (32,000)	877 (31,000)	2,040 (72,000)
Installed capital cost, $	74,000	195,000	192,000	461,000
Direct operating cost, $/yr	5,600	20,700	20,000	46,300
Annualized capital charges, $/yr	11,700	30,800	30,300	72,800
Total annualized cost, $/yr	17,300	51,500	50,300	119,100
$/Mg product[b]	0.016	0.048	0.047	0.11
Cost-effectiveness, $/Mg particulate removed[b]	52.6	44.1	44.4	45.3

[a]References 1, 2, 3, 5.

[b]Quotients are based on 2,000 hours/year operating factor.

[c]Costs are updated to July 1980 using Chemical Engineering cost index.

TABLE 4.11 FABRIC FILTER COSTS FOR PLANT TYPE 2: 9.1 Mg/hour (10 tons/hour) CAPACITY[a]

Parameter	Value[d]		Total[b]
	Fabric filter 1	Fabric filter 2	
Operation controlled	Crushing	Grinding	--
Gas flowrate, m^3/min (ACFM)	289 (10,200)	113 (4,000)	402 (14,200)
Installed capital cost, $	82,000	45,000	127,000
Direct operating cost, $/yr	3,700	5,200	8,900
Annualized capital charges, $/yr	13,000	7,100	20,100
Total annualized cost, $/yr	16,700	12,300	29,000
$/Mg product[c]	0.92	0.16	0.38
Cost-effectiveness, $/Mg particulate removed[c]	44.8	20.0	29.4

[a]References 1 to 3.

[b]Numbers in the right-hand column pertain to combined crushing and grinding operations.

[c]Quotients for crushing are based on 2,000 hours/year operating factor; grinding quotients based on 8,400 hours/year. Total quotients based on 8,400 hours/year.

[d]Costs are updated to July 1980 using Chemical Engineering cost index.

TABLE 4.12 FABRIC FILTER COSTS FOR PLANT TYPE 2: 23 Mg/hour (25 tons/hour) CAPACITY[a]

Parameter	Value[d] Fabric filter 1	Value[d] Fabric filter 2	Total[b]
Operation controlled	Crushing	Grinding	--
Gas flowrate, m^3/min (ACFM)	325 (11,500)	133 (4,700)	458 (16,200)
Installed capital cost, $	92,000	49,000	141,000
Direct operating cost, $/yr	4,200	5,600	9,800
Annualized capital charges, $/yr	14,400	7,800	22,200
Total annualized cost, $/yr	18,600	13,400	32,000
$/Mg product[c]	0.41	0.07	0.16
Cost-effectiveness, $/Mg particulate removed[c]	44.3	18.6	28.0

[a]References 1 to 3.

[b]Numbers in the right-hand column pertain to combined crushing and grinding operations.

[c]Quotients for crushing based on 2,000 hours/year operating factor; grinding quotients based on 8,400 hours/year. Total quotients based on 8,400 hours/year.

[d]Costs are updated to July 1980 using Chemical Engineering cost index.

TABLE 4.13 FABRIC FILTER COSTS FOR PLANT TYPE 2: 135 Mg/hour (150 tons/hour) CAPACITY[a]

Parameter	Value[d]		Total[b]
	Fabric filter 1	Fabric filter 2	
Operation controlled	Crushing	Grinding	--
Gas flowrate, m^3/min (ACFM)	708 (25,000)	320 (11,300)	1,028 (36,300)
Installed capital cost, $	168,000	89,000	257,000
Direct operating cost, $/yr	9,700	10,700	20,400
Annualized capital charges, $/yr	26,400	14,100	40,500
Total annualized cost, $/yr	36,100	24,800	60,900
$/Mg product[c]	0.13	0.02	0.05
Cost-effectiveness, $/Mg particulate removed[c]	39.5	14.3	23.0

[a]References 1 to 3.

[b]Numbers in the right-hand column pertain to combined crushing and grinding operations.

[c]Quotients for crushing are based on 2,000 hours/year operating factor; grinding quotients based on 8,400 hours/year. Total quotients based on 8,400 hours/year.

[d]Costs are updated to July 1980 using Chemical Engineering cost index.

TABLE 4.14 FABRIC FILTER COSTS FOR PLANT TYPE 2: 270 Mg/hour (300 tons/hour) CAPACITY[a]

Parameter	Value[d] Fabric filter 1	Fabric filter 2	Fabric filter 3	Total[b]
Operation controlled	Crushing	Crushing	Grinding	--
Gas flowrate, m^3/min (ACFM)	1,130 (40,000)	226 (8,000)	640 (22,600)	1,996 (70,600)
Installed capital cost, $	221,000	69,000	155,000	445,000
Direct operating cost, $/yr	15,000	3,000	23,900	41,900
Annualized capital charges, $/yr	34,700	10,800	24,400	69,900
Total annualized cost, $/yr	49,700	13,800	48,300	111,800
$/Mg product[c]	0.09	0.03	0.02	0.05
Cost-effectiveness, $/Mg particulate removed[c]	34.0	47.3	13.9	21.4

[a]References 1 to 3.

[b]Numbers in the right-hand column pertain to combined crushing and grinding operations.

[c]Quotients for crushing are based on 2,000 hours/year operating factor; grinding quotients based on 8,400 hours/year. Total quotients based on 8,400 hours/year.

[d]Costs are updated to July 1980 using Chemical Engineering cost index.

Table 4.15 contains cost data for Model Plant 3. The costs are itemized according to the type of option used for control. Option I represents the cost of controlling emissions with one baghouse. Option II represents the cost of controlling emissions from the primary crusher, the secondary crusher, and the final screen with a separate baghouse for each piece of equipment.

Each cost-effectiveness ratio appearing in the tables is simply the quotient of the total annualized cost and amount of particulate collected annually by the fabric filter system. To compute the particulate collected, the 2,000 and 8,400 hours/year operating factors are applied, respectively, to the individual crushing and grinding operations. However, for combined crushing and grinding operations, the following expression has been used to calculate cost-effectiveness:

$$\text{Cost-effectiveness} = \frac{TAC_C + TAC_G}{7.65 \times 10^{-7}\ (2000Q_C + 8400Q_G)}$$

($/Mg particulate removed)

Where: TAC_C, TAC_G = total annualized costs for crushing and grinding baghouses, respectively (M$/year)

Q_C, Q_G = total volumetric flowrates for crushing and grinding baghouses, respectively (m^3/min)

The numerator is the sum of the annualized costs for the crushing and grinding operations, while the denominator represents the total amount of particulate removed by the fabric filters controlling these operations.

As the tables indicate, the installed costs in the crushing (only) model plant (Model Plant 1) range from $130,000 to $461,000, as the plant capacity goes from 68 Mg/hour to 540 Mg/hour. However, given the eight-fold increase in the plant capacity, the installed costs increase relatively little. This is because the fabric filter installed costs are a function of the volumetric flowrate, not the plant capacity. Moreover, the volumetric flowrate, while dependent on the capacity, does not increase proportionately with the plant size.

Based on a 2,000 hour operating year, the total annualized cost increases from $32,150 to $119,100 per year, corresponding to $0.23 to $0.11/Mg product, as the plant capacity goes from 68 to 540 Mg/hour. Ordinarily, one would

TABLE 4.15 FABRIC FILTER COSTS FOR PLANT TYPE 3: 135 Mg/hour (150 tons/hour) CAPACITY

Parameter	Value[c] Option I[a]	Value[c] Option II[a]
Gas flowrate, m^3/min (ACFM)	481 (17,000)	481 (17,000)
Installed capital cost, $	114,000	130,000
Direct operating cost, $/yr	17,300	18,800
Annualized capital charges, $/yr	28,100	31,800
Total annualized cost, $/yr	45,400	50,600
$/Mg product[b]	0.27	0.30
Cost-effectiveness, $/Mg particulate removed	116.8	130.1

[a]In Option I, all sources are ducted to one baghouse. In Option II, each crusher and the final screen have their own baghouse.

[b]Quotients are based on 1,250 hours/year operating factor.

[c]Costs are updated to July 1980 using Chemical Engineering cost index.

expect a more substantial increase in the total annualized cost over such a large range in plant capacities. However, as Tables 4.7 through 4.10 show, the annualized capital charges comprise the bulk of the total annualized costs. And since the annualized capital charges are directly proportional to the installed costs, the total annualized cost very nearly follows the change in the capital cost.

There are several reasons why the direct operating costs are so low. First, because the gas streams controlled are non-corrosive and low-temperature, the fabric filter maintenance is less than one percent of the installed cost annually. Then, because there is a relatively small pressure drop through the baghouse system, the power cost is relatively low. Costs for replacement parts such as bags are proportional to the gas flowrate, but at the same time amount to a small fraction of the direct operating costs.

A similar pattern appears with the costs for Model Plant 2, which contains both crushing and grinding operations. The costs here are about the same order of magnitude as are those for Model Plant 1. The main difference is the additional baghouse required to control the grinder and its auxiliaries. Here the installed costs range from $127,000 to $445,000, while the annualized costs go from $29,000 to $111,800 per year ($0.38 to $0.05/Mg product, respectively).

4.2.3 Cost of Wet Dust Suppression System

In a wet dust suppression system, dust emissions are controlled by applying moisture to the crushed material at critical dust-producing points in the process flow. This causes dust particles to adhere to large stone surfaces or to form agglomerates too heavy to become or to remain airborne. A detailed discussion of wet dust suppression systems can be found in Section 3.2.1.

Costs for control of process emissions using wet dust suppression control systems are presented in this section for fixed plants with crushing operations only (Model Plant 1) and a portable plant with crushing operations only (Model Plant 3). Costs are shown for Model Plant 1 sizes of 68, 135, 270, and 540 Mg/hour (75, 150, 300, and 600 tons/hour, respectively), and the Model Plant 3 size of 135 Mg/hour (150 tons/hour).

The capital costs for wet dust suppression control systems in crushing plants are presented in Table 4.16. The costs range from a total capital cost of $37,620 for a 68 Mg/hour (75 tons/hour) fixed crushing plant to $81,975 for a 540 Mg/hour (600 tons/hour) fixed crushing plant.

The total cost for installing a wet dust suppression control system is the sum of the total capital cost (direct cost), total indirect cost, and contingency cost. The total installed cost is shown in Table 4.17. The components of total indirect cost are listed in Table 4.18. The total installed cost ranges from $60,945 for a 68 Mg/hour (75 ton/hour) fixed crushing plant to $132,800 for a 540 Mg/hour (600 ton/hr) fixed crushing plant.

The total annualized costs for installing and operating a wet dust suppression control system are presented in Table 4.19. The total annualized cost consists of annual capital costs, cost of surfactant used, utilities, cost of water, and annualized operating and maintenance costs. Total annualized costs range from $13,098 for a 68 Mg/hour (75 ton/hour) fixed crushing plant to $29,728 for a 540 Mg/hour (600 ton/hour) fixed crushing plant.

The cost of control per megagram of product can be calculated. Assuming an operation time of 2000 hours/year, the cost per megagram of product ranges from $0.10/Mg for a 68 Mg/hour (75 ton/hour) plant to $0.03/Mg for a 540 Mg/hour (600 Ton/hour) plant.

4.2.4 Cost of Combination Systems

Wet dust-suppression and dry collection techniques are often used in combination to control particulate emissions from non-metallic mineral facilities. Wet dust-suppression techniques are generally used to control emissions at the primary crushing stage and at subsequent screens, transfer points, and crusher feeds. Dry collection is generally used to control emissions at secondary and tertiary crusher discharges, where new dry mineral surfaces and fine particles are formed. A large portion of the fine particulate is removed by dry collection, but subsequent dust-suppression applications become more effective with a minimum of added moisture. Depending on production requirements, dry collection may be the only method that can be used at the finishing screens.

TABLE 4.16 CAPITAL COST FOR WET DUST SUPPRESSION CONTROL SYSTEMS AT CRUSHING PLANTS[d]

Item	Fixed crushing plants				Portable plant
	68 Mg/hour (75 TPH)	135 Mg/hour (150 TPH)	270 Mg/hour (300 TPH)	540 Mg/hour (600 TPH)	135 Mg/hour (150 TPH)
Equipment cost	15,970	19,700	26,100	36,200	19,700
Cost of piping and auxiliary equipment[a]	18,100	21,300	26,100	39,925	21,300
Installation cost[b]	3,200	3,830	4,470	5,110	3,830
Structural support cost[c]	350	465	625	740	465
TOTAL CAPITAL COST	37,620	45,295	57,295	81,975	45,295

[a]Includes piping, insulation, and electrical work.

[b]Based on a wage rate of $12.00/hour ($9.00/hour for labor plus $3.00/hour for fringe benefits).

[c]Based on a cost of $0.70/lb of structural support.

[d]Costs are updated to July 1980 using Chemical Engineering cost index.

TABLE 4.17 CAPITAL AND INDIRECT COSTS FOR WET DUST SUPPRESSION CONTROL SYSTEMS AT CRUSHING PLANTS[d]

Item	Fixed crushing plants				Portable plant
	68 Mg/hour (75 TPH)	135 Mg/hour (150 TPH)	270 Mg/hour (300 TPH)	540 Mg/hour (600 TPH)	135 Mg/hour (150 TPH)
Total capital cost[a]	37,620	45,295	57,295	81,975	45,295
Total indirect cost[b]	13,165	15,855	20,055	28,690	15,855
Contingency cost[c]	10,160	12,230	15,470	22,135	12,230
TOTAL INSTALLED COST	60,945	73,380	92,820	132,800	73,380

[a]Total direct cost.

[b]Equals 35 percent of total capital cost. See Table 4.18 for breakdown of cost components.

[c]Equals 20 percent of capital and indirect costs.

[d]Costs are updated to July 1980 using Chemical Engineering cost index.

TABLE 4.18 BREAKDOWN OF INDIRECT COST FACTOR

Component	Value
Contractor fee	15% of capital costs
Engineering	10% of capital costs
Freight	2% of capital costs
Taxes	2% of capital costs
Spares	1% of capital costs
Allowance for shakedown	5% of capital costs
TOTAL, Indirect costs	35% of capital costs

TABLE 4.19 TOTAL ANNUALIZED COST FOR WET DUST SUPPRESSION CONTROL SYSTEMS FOR CRUSHING PLANTS

Item	Fixed crushing plant costs				Portable plant costs
	68 Mg/hour (75 TPH)	135 Mg/hour (150 TPH)	270 Mg/hour (300 TPH)	540 Mg/hour (600 TPH)	135 Mg/hour (150 TPH)
Annualized capital costs[a] ($)	9,595	11,555	14,610	20,915	11,555
Cost of surfactant used[b] ($)	147	287	575	1,150	185
Utilities ($)	128	192	255	383	120
Water costs[c] ($)	28	55	128	255	37
Annualized operating and maintenance cost[d] ($)	3,200	4,470	5,750	7,025	4,470
TOTAL ANNUALIZED COST ($)	13,098	16,559	21,318	29,728	16,367

[a]From total cost item in Table 4.17. Based on a capital recovery factor of 15.75 percent, which includes 4 percent for administration costs, 10 year life, and 10 percent interest rate.

[b]Based on a surfactant price of $6.40/gallon.

[c]Based on IGCI cost data which has been updated to July 1980.

[d]Based on a wage rate of $12/hour ($9/hour for labor plus $3/hour for fringe benefits).

The costs of controlling process emissions with combination systems are presented in Table 4.20. In costing the fabric filter it is assumed that one baghouse is used per crushing plant. The cost for the wet dust-suppression system in combination with a baghouse is assumed to be 90 percent of the cost of controlling all emissions with wet suppression alone. The total annualized costs for combination systems range from $25,200 per year for a 68 Mg/hour (75 ton/hour) crushing plant to $69,400 per year for a 540 Mg/hour (600 ton/hour) crushing plant.

4.3 COST OF CONTROLLING FUGITIVE DUST SOURCES

Table 2.4 lists the emission sources which are considered to be fugitive dust sources. Fugitive dust sources are blasting, loading and hauling, haul roads, conveyors, and stockpiles. Emissions are caused by load-in, load-out, ground disturbance, and wind. This section presents the cost of controlling fugitive dust sources where data are available.

4.3.1 Blasting

No effective method is available for controlling particulate emissions from blasting operations. As discussed in Section 3.1.2, good blasting practices may be employed to reduce the emissions generated by blasting.

4.3.2 Loading and Hauling

Dust emissions generated from the loading of material by front-end loaders or shovels are difficult to control. Some control may be attained by using water trucks with portable hoses to wet down piles prior to loading. No cost information is presented for controlling loading operations.

Material may be blown out of the back of trucks during hauling. These emissions can be reduced by watering the material in the trucks prior to hauling. No costs are presented for controlling these emissions.

4.3.3 Haul Roads

Several methods are available for reducing or controlling emissions from trucks traveling on unpaved haul roads between the quarry and the plant. These methods include watering, oiling, paving, limiting vehicle weight, and reducing vehicle speed. Sweeping or vacuuming reduces emissions on paved roads.

TABLE 4.20 TOTAL INSTALLED AND ANNUALIZED COST FOR COMBINATION CONTROL SYSTEMS[c]

	Fixed crushing plant costs				Portable plant costs
	68 Mg/hour (75 TPH)	135 Mg/hour (150 TPH)	270 Mg/hour (300 TPH)	540 Mg/hour (600 TPH)	135 Mg/hour (150 TPH)
Fabric Filter[a]					
Gas flowrate, m^3/min (ACFM)	133 (4,700)	225 (9,000)	504 (17,800)	708 (25,000)	225 (9,000)
Installed capital cost, $	49,000	74,000	130,000	168,000	74,000
Direct operating cost, $	5,600	5,600	11,500	16,300	5,600
Annualized capital charges, $	7,800	11,700	20,600	26,400	11,700
Total annualized cost, $/yr	13,400	17,300	32,100	42,700	17,300
Wet Dust Suppression[b]					
Installed capital cost, $	54,800	66,000	83,500	119,500	66,000
Direct operating cost, $	3,200	4,500	6,000	7,900	4,300
Annualized capital charges, $	8,600	10,400	13,100	18,800	10,400
Total annualized cost, $/yr	11,800	14,900	19,100	26,700	14,700
TOTAL INSTALLED CAPITAL COST, $	103,800	140,000	213,500	287,500	140,000
TOTAL ANNUALIZED COST, $	25,200	32,200	51,200	69,400	32,000

[a]Assume one fabric filter (baghouse) of given capacity, operating 2,000 hours per year.

[b]All wet dust suppression costs are assumed to be 90 percent of the cost of wet suppression alone.

[c]Costs are updated to July 1980 using Chemical Engineering cost index.

Published truck speed data are not available, but the industry estimates that the speed ranges from 16 to 32 km/hr (10 to 20 mph).[6] If this speed were reduced from an average of 24 km/hr (15 mph) to an average of 16 km/hr (10 mph), this would result in an estimated emission reduction of 33 percent.[7] For model plant sizes of 135 Mg/hr (150 tons/hour) or less, no additional vehicles would be required as the result of speed reduction. The 270 Mg/hr (300 ton/hour) plant would require one additional 31.8 Mg (35 ton) truck and the 540 Mg/hour (600 ton/hour) plant would require two additional trucks to maintain production.

The estimated costs for controlling emissions by speed reduction are presented in Table 4.21. The unit cost data for controlling dust emissions from plant roads is presented in Table 4.22.

The estimated costs for controlling emissions by paving, vacuuming, oiling, and watering are also presented in Table 4.21. These costs depend on the extent of plant roads, which usually do not vary significantly with plant capacity. Therefore, the cost for these methods will be the same for all sizes of plants. Also, the cost per ton of capacity will be higher for smaller plants. The length of unpaved roads in a typical plant is estimated to be 1.64 kilometer (1 mile). Table 4.23 presents a breakdown of the annual cost of watering. The costs are based on a watering frequency of four to five times a day.

4.3.4 Conveyors

Emissions from conveyor transfer points are considered to be process emissions, whereas those due to wind are regarded as fugitive. The latter can be controlled or suppressed by installing covers over the conveyors or installing water sprayers along their length. If the material being conveyed is sprayed at the conveyor inlet (which may be a crusher/screen outlet or transfer point), the suppression effect is usually carried over. Hence, installation of additional sprayers may only marginally increase the suppression efficiency. For this reason, costs of installing sprayers are not estimated here. Costs of retrofitting covers on existing conveyors may range from $157 to $316 per meter ($47 to $95 per foot) of conveyor length, depending on the amount of work required and the type of covering.[11, 12] The lower figure

TABLE 4.21 CAPITAL INVESTMENT AND ANNUAL COSTS FOR CONTROLLING FUGITIVE DUST EMISSIONS FROM HAUL ROADS[b]

Item	Plant size					
	9.1 Mg/hr (10 TPH)	23 Mg/hr (25 TPH)	68 Mg/hr (75 TPH)	135 Mg/hr (150 TPH)	270 Mg/hr (300 TPH)	540 Mg/hr (600 TPH)
Capital Investment, $						
Paving	37,700	37,700	37,700	37,700	37,700	37,700
Vacuuming	29,600	29,600	29,600	29,600	29,600	29,600
Oiling	40,500	40,500	40,500	40,500	40,500	40,500
Watering	18,900	18,900	18,900	18,900	18,900	18,900
Speed reduction[a]	--	--	--	--	202,000	404,000
Annual Costs, $						
Paving	11,300	11,300	11,300	11,300	11,300	11,300
Vacuuming	15,400	15,400	15,400	15,400	15,400	15,400
Oiling	40,500	40,500	40,500	40,500	40,500	40,500
Watering	34,130	34,130	34,130	34,130	34,130	34,130
Speed reduction[a]	--	--	--	--	118,000	235,800
Annual Costs, $/Mg						
Paving	0.75	0.30	0.10	0.05	0.03	0.01
Vacuuming	1.03	0.41	0.14	0.07	0.03	0.02
Oiling	2.70	1.08	0.36	0.18	0.09	0.05
Watering	2.25	0.90	0.30	0.15	0.07	0.04
Speed reduction[a]	--	--	--	--	0.26	0.26

[a]Based on one 31.8 Mg (35 ton) truck for the 270 Mg/hr (300 TPH) plant and two trucks for the 540 Mg/hr (600 TPH) plant.

[b]Costs are updated to July 1980 using Chemical Engineering cost index.

TABLE 4.22 UNIT COSTS FOR CONTROLLING FUGITIVE DUST EMISSIONS FROM HAUL ROADS[h]

Control measure	Capital cost		Annual cost, $/yr[a]	Comment
	Unit	$/unit		
Paving	1.7 km, 3.65 m wide (1 mile, 12 ft wide)	37,700[b]	11,300	Repave every 5 years
Vacuuming	One sweeper	29,600[b]	15,400[c]	Vacuuming twice a week
Oiling	1.7 kg, 365 m wide (1 mile, 12 ft wide)	6,700[b]	40,400	Reoil every month
Watering	Truck equipped with a 1.1 kl (3,000 gal) tank	16,000 - 22,000[d]	34,130[e]	Watering the roads four to five times a day
Speed reduction[f]	One 31.8 Mg (35 ton) truck	202,000	118,000[g]	Estimated truck life of five years

[a]The cost of capital (interest) assumed at 10 percent.

[b]From Reference 8.

[c]Assumed vacuum life of 5 years; maintenance at 3 percent of capital cost; labor at 8 hours per week, $9.25 per hour including overhead.

[d]From References 9 and 10.

[e]See Table 4.23.

[f]Estimated.

[g]Includes wages of truck driver at $12 per hour, including overhead.

[h]Costs are updated to July 1980 using Chemical Engineering cost index.

TABLE 4.23 ANNUAL COST OF WATERING ROADWAYS[d]

Cost item	Quantity	Unit cost	Cost/year
Operating costs			
Water	136 m^3/day (36,000 gal/day)	\$0.085/m^3 (\$0.34/1000 gal)	\$ 3,060
Fuel	9.5 liters/day (2.5 gal/day)	\$0.13/liter (\$1.20/gal)	750
Labor	2,000 hours	\$12.00/man hour[a]	24,000
Maintenance	5 percent of initial tank-truck cost[b]		950
Fixed charges			
Capital recovery	26.4 percent of initial tank-truck cost[c]		4,990
Insurance and taxes	2 percent of initial tank-truck cost[b]		380
		Total annual cost	\$34,130

[a]Includes supervision @ 15 percent, payroll overhead @ 20 percent, and plant overhead @ 50 percent of direct labor.

[b]Engineering estimate.

[c]Based on 5-year truck life and 10 percent interest.

[d]Costs are updated to July 1980 using Chemical Engineering cost index.

applies to a "weather-tight" system which protects the conveyed material from direct winds and precipitation. A "dust-tight" system, which is usually vented to a bag filter, costs twice as much. Total conveyor lengths for non-metallic mineral plants vary significantly, ranging from a hundred to several hundred meters (yards). Because maintenance costs of conveyor covers are minimal, the annual cost will depend mainly on the remaining plant life and the cost of capital (interest).

4.3.5 Storage Piles

Fugitive emissions from storage piles are due to load-in, wind erosion, and load-out.

Materials at non-metallic mineral plants are usually taken to storage piles via a conveyor system. Emissions result mainly from the free fall of material onto the pile. As discussed in Chapter 3, control measures include wet dust suppression, telescopic chutes, stone ladders, and movable stacking conveyors. Enclosures or silos are very good for controlling load-in and windblown emissions. However, they are not considered economically practical control measures. Table 4.24 presents capital investment costs of stone ladders, telescoping chutes, movable stackers, and enclosures. Because this equipment requires very little maintenance, the annual cost will depend mainly on the remaining plant life and the cost of capital (interest).

Spraying storage piles with water effectively reduces fugitive emissions from wind erosion, and the addition of dust-suppressant chemicals to the spray increases control efficiency. The truck that waters plant roads can be equipped with a hose for spraying storage piles. Alternatively, an elevated sprinkler system may be used to spray the stock piles. The cost of elevated sprinkler systems ranges from a few thousand dollars to $27,000, depending on the plant. If the sprinkler pump could be accommodated in an existing pump house, for example, this would save the cost of a new pump house.[14] Application costs for spraying storage piles with a wetting agent are estimated to range from $0.01 to $0.07[15,16] per Mg ($0.01 to $0.06 per ton) of product stockpiled, depending on the type of chemical used, the number of storage piles, and the frequency of spraying. The latter depends on climate and operational activities around the pile.

TABLE 4.24 CAPITAL INVESTMENT FOR REDUCING FUGITIVE DUST EMISSIONS FROM STORAGE PILES

Control measure	Fixed capital investment[c]	
	Unit	$/unit
Stone ladder	9.1 m (30 ft) pile	27,000[a]
Telescoping chutes	Chute	35,000 - 57,000[b]
Moveable stacker	0.91 Mg (1.0 ton) per hour throughput	950[a]
Enclosures	0.76 m^3 (1.0 yd^3)	110 - 270[b]

[a]Reference 8.

[b]Reference 13.

[c]Costs are updated to July 1980 using Chemical Engineering cost index.

REFERENCES FOR CHAPTER 4

1. Written communications between William M. Vatavuk (Economic Analysis Branch, Strategies and Air Standards Division) and James A. Eddinger, (Industrial Studies Branch, Emission Standards and Engineering Division). Dates: August 18, 1976; June 15, June 30, July 8, 1977; and February 9, March 17, and April 20, 1978.

2. Nonmetallic Minerals Industries Control Equipment Costs. Prepared by: Industrial Gas Cleaning Institute (Stamford, Connecticut). Prepared for: U.S. Environmental Protection Agency, Strategies and Air Standards Division, Economic Analysis Branch (Research Triangle Park, North Carolina). Contract No. 68-02-1473, Task No. 19. February 1977.

3. Kinkley, M.L. and R.B. Neveril. Capital and Operating Costs of Selected Air Pollution Control Systems. Prepared by: GARD, Inc. (Niles, Illinois). Prepared for: U.S. Environmental Protection Agency, Strategies and Air Standards Division, Economic Analysis Branch (Research Triangle Park, North Carolina). Contract No. 68-02-2072. May 1976.

4. Written communication between William M. Vatavuk (U.S. Environmental Protection Agency, Strategies and Air Standards Division, Research Triangle Park, North Carolina) and Ronald Zweben (Lear Siegler, Inc., Raleigh, North Carolina). Date: April 26, 1978.

5. McGlamery, G.G., et al. Detailed Cost Estimates for Advanced Effluent Desulfurization Processes. Prepared by: Tennessee Valley Authority, Muscle Shoals, Alabama, under Interagency Agreement EPA IAG-134(D) Part A. Prepared for: Office of Research and Development, U.S. Environmental Protection Agency, Washington, D.C. January 1975.

6. Private communication between A. Kothari of PEDCo Environmental, Inc., Cincinnati, Ohio, and J. Houses of General Crushed Stone, Easton, Pennsylvania. June 7, 1977.

7. Compilation of Air Pollutant Emission Factors (Third Edition). U.S. Environmental Protection Agency. Office of Air Quality Planning and Standards. Research Triangle Park, N.C. Publication No. AP-42. August 1977. p. 11.2-2.

8. Fugitive Emissions Control Technology for Iron and Steel Plants (Draft). Prepared by Midwest Research Institute, Kansas City, Missouri, for U.S. Environmental Protection Agency, Research Triangle Park, North Carolina, under Contract No. 68-02-2120. January 1977. p. 29.

9. Private communication between B. Livingston of PEDCo Environmental, Inc., Cincinnati, Ohio, and R. McCrate of Reilly-Dven Co., Cincinnati, Ohio. May 13, 1977.

10. Private communication between B. Livingston of PEDCo Environmental, Inc., Cincinnati, Ohio, and International Trucks, Cincinnati, Ohio. May 18, 1977.

11. Ref. 8. p. 33.

12. Private communication between A. Kothari of PEDCo Environmental, Inc., Cincinnati, Ohio, and W. Van Eaton of Armco Steel Corp., Metal Products Div., Cincinnati, Ohio. May 1977.

13. Technical Guidance for Control of Industrial Process Fugitive Particulate Emissions. U.S. Environmental Protection Agency, Office of Air Quality Planning and Standards, Research Triangle Park, North Carolina. Publication No. EPA-450/3-77-010, March 1977. pp. 2-39 and 2-40.

14. Automated Stockpile Sprinkling System. National Crushed-Stone Association, 1415 Elliot Place, Northwest, Washington, D.C. 20007.

15. Ref. 8. p. 36.

16. Ref. 13. p. 2-40.

5.0 ENVIRONMENTAL IMPACT

This chapter presents an assessment of the incremental impacts to the environment associated with the application of the emission reduction techniques described in Chapter 3. Both beneficial and adverse impacts that may be directly or indirectly attributable to the application of these emission control techniques are assessed for air, water, solid waste, energy, and noise.

5.1. AIR POLLUTION IMPACT

This section presents a comparative assessment of the air pollution impacts associated with the application of the emission control techniques described in Chapter 3 for the control of particulate emissions from both process and fugitive dust sources. Because emissions from fugitive dust sources are typically from large areas and are discharged directly to the atmosphere in an unconstrained manner rather than through a stack, such a quantitative measurement of these emissions would be difficult, if not impossible. Consequently, few data are available that would permit the calculation of the emission reduction achievable by the application of alternative control measures to fugitive dust sources. Similarly, because of the nature of wet dust suppression systems, no data are available that would permit a quantitative comparison of the control capabilities of wet dust suppression versus dry collection systems on process sources. As a result, the following discussion of air pollution impact is limited to the application of dry collection systems on non-metallic mineral processing plants.

Table 5.1 presents estimates of the emission reductions achievable by the application of dry collection systems on three model plant types with production capacities of 9.1 to 540 Mg/h (10 to 600 tons/h). Model plant type 1 is a fixed crushing plant, type 2 is a fixed crushing and grinding plant, and type 3 is a portable crushing plant. Estimates of inlet

TABLE 5.1 ACHIEVABLE EMISSION REDUCTIONS USING DRY COLLECTION

Model plant type	Plant size		Ventilation size		Emissions				Emission reduction %
					Inlet		Outlet		
	Mg/h	(tons/h)	m^3/s	(scfm)	kg/h	(lb/h)	kg/h	(lb/h)	
1	68	(75)	8.35	(17,700)	323	(712)	1.50	(3.31)	99.5
	135	(150)	11.8	(24,900)	457	(1,007)	2.12	(4.68)	99.5
	270	(300)	22.7	(48,100)	880	(1,940)	4.09	(9.01)	99.5
	540	(600)	34.0	(72,000)	1,315	(2,895)	6.12	(13.5)	99.5
2	9.1	(10)	6.7	(14,200)	260	(570)	1.21	(2.66)	99.5
	23	(25)	7.65	(16,200)	295	(650)	1.38	(3.04)	99.5
	135	(150)	17.1	(36,200)	663	(1,460)	3.08	(6.79)	99.5
	270	(300)	33.4	(70,700)	1,290	(2,845)	6.01	(13.3)	99.5
3	135	(150)	8.02	(17,000)	310	(685)	1.44	(3.18)	99.5

Note: Inlet emission rates are based on an inlet loading of 10.8 grams per dry standard cubic meter. This inlet value is the average of emission measurements conducted by EPA on baghouse inlets. These inlet measurements are reported in Table 3.4 and were measured by EPA Methods 5 or 17.

emissions presented are based on an inlet loading of 10.8 grams per dry standard cubic meter (4.7 grains per dry standard cubic foot) and the gas volumes for the model plants. As indicated by the performance data presented in Chapter 3, the use of fabric filters to collect particulate emissions at non-metallic plants can achieve an outlet concentration of 0.046 g/dscm (0.02 gr/dscf). If adequate hooding and ventilation are also applied, essentially complete capture is assured. As shown in Table 5-1, inlet emissions range from 259 to 1,315 kg/h (571 to 2,896 lb/h). The application of dry collection systems would reduce these emissions to about 1.21 to 6.12 kg/h (2.66 to 13.5 lb/h). This is an emission reduction of 99.5 percent from inlet emission levels.

5.2 WATER POLLUTION IMPACT

The utilization of dry collection techniques (particulate capture combined with a dry emission control device) for control generates no water effluent discharge. In cases where wet dust suppression techniques are used, the water adheres to the material processed until it evaporates.[1] No data are available concerning the impact of dust suppressants applied to roadways on water quality. Considering the amount of suppressants required, however, the use of suppressants should not cause any problem. Therefore, the application of air pollution control technology to the non-metallic mineral industry should have little impact on water quality.

5.3 SOLID WASTE DISPOSAL IMPACT

The method of disposition of quarry, plant, and dust collector solid waste materials depends upon State and local government regulations and corporate policies. When baghouses are used, about 0.5 Mg (0.6 tons) of solid waste are collected for every 227 Mg (250 tons) of mineral processed.[2] In many cases this material can be recycled back into the process, sold, or used for a variety of other purposes.

Where no market exists for the collected fines, they are typically disposed of in the mine or in an isolated location in the quarry. A plant producing 540 Mg/h (600 tons/h) and using dry collection for control would generate about 11 Mg (12 tons) of waste over an 8-hour period, which is less than 0.3 percent of the plant throughput. Generally, the collected fines are

discharged to a haul truck and transported to the quarry for disposal.[3] No subsequent air pollution problems should develop, provided the waste pile is controlled by one of the methods discussed in Chapter 3.

Thus, the solid waste generated by the application of dry collection methods in the non-metallic mineral industry can usually be disposed of without any adverse impact on the environment. However, some processing plants can experience problems in handling and disposing of the waste. When wet dust suppression is used, no solid waste disposal problem results over that resulting from normal operation.

5.4 ENERGY IMPACT

Application of the alternative control techniques for non-metallic mineral processing facilities will necessarily result in an increase in energy consumption over that required to operate a plant without air pollution controls. Table 5.2 presents estimates of the energy requirements for the three model plant types, both with and without controls. As in the previous analyses, the alternative control techniques evaluated include dry collection, wet dust suppression, and the combination of dry and wet controls.

It is expected that the application of dry collection controls would result in the highest increase in energy usage of the three alternative control techniques evaluated. Both the wet dust suppression technique and the combination system of wet and dry controls have been shown to use less energy than fabric filters alone for the case of the 540 Mg/h (600 tons/h) fixed crushing plant. For this reason, only the energy requirements for the fabric filter technique are reported in Table 5.2.

As indicated in Table 5-2, the energy required to operate a 540 Mg/h plant of type 1 without controls is about 1038 kW (1392 hp). The application of dry controls at this plant would require 194 kW (260 hp) of additional energy to operate the fans, air compressors, and screw conveyors associated with its application. This represents a 19 percent increase in energy consumption over that required to operate the uncontrolled plant. In contrast, the energy requirement associated with the application of wet dust suppression systems is negligible. For the 540 Mg/h plant, the application of wet dust suppression control would require only 3.8 kW (5 hp) of additional

TABLE 5.2 ENERGY REQUIREMENTS FOR MODEL NON-METALLIC MINERAL PLANTS[a]

Model plant type	Plant size		Uncontrolled		Dry collection (fabric filter)		Percent increase
	Mg/hr	(tons/h)	kw	(hp)	kw	(hp)	
1	68	(75)	312	(418)	356	(478)	14
	135	(150)	391	(524)	450	(604)	15
	270	(300)	630	(845)	737	(989)	17
	540	(600)	1,038	(1,392)	1,232	(1,652)	19
2	9.1	(10)	214	(287)	244	(327)	14
	23	(25)	353	(473)	387	(519)	10
	135	(150)	1,584	(2,124)	1,666	(2,234)	5
	270	(300)	3,016	(4,045)	3,170	(4,252)	5
3	135	(150)	391	(524)	450	(604)	15

[a]Reference 1.

energy, or less than a 0.4 percent increase in energy consumption.[3] If a combination of both wet and dry controls were applied to this model plant, the additional energy requirement would be 75 kW (100 hp), or about 7 percent.

5.5 IMPACT ON NOISE

Allowable noise levels and employee exposure times are specified by the Mine Safety and Health Administration in Parts 55 and 56 of the August 7, 1974, Federal Register, Volume 39, No. 153. These limits require that potential noise problems be assessed and sound-dampening equipment be installed as required. No noise data were developed during this study; however, compared with the noise emanating from non-metallic mineral process equipment, any additional noise from control system exhaust fans is likely to be insignificant. Thus, no significant noise impact is anticipated as a result of the use of best demonstrated control technology at non-metallic mineral plants.

REFERENCES FOR CHAPTER 5

1. Development Document for Interim Final Effluent Limitations Guidelines and Standards of Performance - Mineral Mining and Processing Industry - Volume I (Minerals for the Construction Industry). Prepared by Versar, Incorporated, for the U.S. Environmental Protection Agency, Washington, D.C. EPA 440/1-75-/059. January 1975. p. V-3.

2. Source Testing Report - Essex Bituminous Concrete Corporation, Dracut, Massachusetts. Prepared by Roy F. Weston, Incorporated, Westchester, Pennsylvania, for U.S. Environmental Protection Agency. EPA Report No. 75 STN-2. December 27, 1974.

3. Standards Support and Environmental Impact Statement - An Investigation of the Best Systems of Emission Reduction for Quarrying and Plant Process Facilities in the Crushed- and Broken-Stone Industry. Draft Report. U.S. Environmental Protection Agency, Research Triangle Park, North Carolina. August 1975.

6.0 COMPLIANCE TEST METHODS AND MONITORING TECHNIQUES

6.1 EMISSION MEASUREMENT METHODS

EPA relies primarily on Methods 5 and 9 for particulate matter measurements and visible emission observations (opacity) on stacks. In addition, as the particulate concentrations are expected to be independent of temperature for this industry, Method 17 (in-stack filtration) is an acceptable particulate sampling method. These are established reference or compliance methods and were used by EPA in obtaining the emissions data presented in Appendix A on fabric filter collectors used in the non-metallic mineral industry.

For fugitive emissions which are impractical to quantify, EPA has relied historically on visual methods, specifically on Method 9, to limit the opacity of visible emissions and force the application of controls. In this study, a new method in addition to Method 9 was used, Method 22. This method was specifically developed by EPA for the visual determination of fugitive emissions from material processing sources. Rather than assess the opacity of a visible emission, Method 22 determines the frequency at which a visible emission occurs during an observation period. A standard can thus be established which limits the percent of time during which visible emissions from a fugitive emissions source would be allowed. Both methods were used in assessing the effectiveness of local exhaust hoods and wet dust suppression systems in reducing or preventing fugitive emissions from non-metallic mineral process facilities. Method 22 appears to be more applicable to intermittent sources of fugitive emissions while Method 9 is more applicable to continuous fugitive emission sources. In the case of fugitive dust sources which are typically large in area, EPA has no established procedures for either quantifying emissions from these sources or for assessing the visibility of emissions from these sources.

During the test program on fabric filter collectors, it was necessary to consider the potential problems associated with low levels of controlled emissions from the sources. Data from an EPA report indicate that particulate

catches of about 50 mg are adequate to insure an error of no more than 10 percent.[1] Sampling trains with higher sampling rates, which are allowed by Method 5 and are commercially available, can be used to reduce the total sampling time and costs. Sampling costs of a test consisting of three particulate runs (the number normally specified by performance test regulations) is estimated to be about $5000 to $9000. This estimate is based on sampling site modifications such as ports, scaffolding, ladders, platforms all costing less than $2000 and testing being conducted by contractors.

Because the outlet gas stream from the control devices used in this industry is generally well contained, no special sampling problems are anticipated.

Procedures for monitoring the process are discussed in Chapter 7.

6.2 MONITORING SYSTEMS AND DEVICES

The effluent streams from sources within the non-metallic mineral industry are essentially at ambient conditions. Therefore, the visible-emission-monitoring instruments proven adequate for power plants are also applicable for this industry. These instruments are covered by EPA performance standards contained in Appendix B of 40 CFR Part 60.

Equipment and installation costs are estimated to $20,000, and annual operating costs including data recording and reduction, $8000 to $9000 for each stack.[2]

REFERENCES FOR CHAPTER 6

1. Mitchell, W.J. Additional Studies on Obtaining Replicate Particulate Samples from Stationary Sources. Unpublished report. Emission Monitoring and Support Laboratory, Environmental Protection Agency, Research Triangle Park, N.C., November 1973.

2. Standards Support and Environmental Impact Statement - An Investigation of the Best Systems of Emission Reduction for Quarrying and Plant Process Facilities in the Crushed- and Broken-Stone Industry. Draft Report,- U.S. Environmental Protection Agency, Research Triangle Park, N.C. August 1975.

7.0 ENFORCEMENT ASPECTS

When formulating an air pollution control regulation, one must consider the aspects of enforcing that regulation. A regulation may be set for a specific operation, a combination of operations, or the entire processing or manufacturing facility. From a compliance evaluation standpoint, it is desirable to have separate standards for each affected operation in the industry. In practice, however, it often may be difficult to do so. This section identifies alternative air pollution control regulations and discusses enforcement aspects of these regulations.

7.1 PROCESS CONSIDERATIONS

The non-metallic mineral industry is characterized by a number of separate processing operations and emission sources, a variety of equipment types and configurations, and feed rates and composition variations. Some of the particulate emission sources such as quarrying, dumping, and storage are open sources. Other operations such as conveying and loading are frequently only partially enclosed, while crushing and screening can be more completely enclosed. In addition, the moisture content of the material has a great effect on the particulate emissions. Process feed rates are not generally measured and some of the individual processes may operate on a very intermittent basis.

Process parameters that should be monitored to ensure that facilities are operated normally during enforcement tests or inspections include: the process throughput rate, the moisture content of the feed material and the approximate size distribution of the raw material and product. As previously mentioned non-metallic mineral plants normally are not equipped with devices for measuring process weight rates. Based on normal screen pass-through and recycle rates, however, the amount of material entering a processing unit can be estimated. Guidelines are available for making such estimates.[1] An

analysis of the moisture content of the material processed is very important to ensure that dust control at the time of the test is effected by the control system and not the result of unusually high moisture levels that are not normal for the plant. When the addition of moisture is part of the control system (e.g., wet dust suppression), a record should be made of the amount of added moisture required to effectively control emissions under the worst operating and climatic conditions. Moisture would have to be determined by taking samples of the feed streams for subsequent analysis.

7.2 FORMATS

Air pollution regulations for this industry can be expressed in terms of 1) quantitative particulate emission limits in terms of concentration, mass rate, or process-weight type units, 2) limits on visible emissions, 3) ambient air concentrations at the plant property line, 4) equipment standards that include specifications on process and/or control equipment, operating conditions,and monitoring requirements, and 5) compatible combinations of such measures.

7.2.1 Enforcement of Quantitative Emission Limits

Quantitative emission limits in the form of measured concentrations or limits on the emission rate per unit of time or throughput could be applied to plant process facilities (crushers, grinders, screens, conveyor transfer points, etc.) where emissions are captured by hoods or enclosures and vented to a control device for collection. Determination of particulate emissions or concentrations where control devices are used requires a source test on the exhaust of each control device. This involves utilization of available test methods (EPA Methods 1, 2, 4, 5), an experienced 2 to 3 person test crew and equipment, and an expenditure on the order of $5,000 to $9,000 per sampling location for a series of three runs. At times, a stack may have to be modified to provide a suitable sampling site. The cost per sampling location will decrease when more than one is tested at a plant. Due to the low particulate concentration expected at the outlet of a fabric filter system, the sampling time may have to be extended to insure adequate sample. Results from source tests provide accurate data on particulate concentration and emission rates.

As mentioned previously, non-metallic mineral plants normally are not equipped with devices for measuring process-weight rates. Consequently, process-weight type standards in which emissions are related to throughput may be difficult to enforce unless the plants are required to install process-weight rate monitors. In addition, in some instances more than one process may be vented to a common control device and only the total emissions from the connected processes can be determined.

No special problems exist with the enforcement of concentration or pollutant mass rate limits. It should be noted, however, that these limits are applicable to the control device only. As a result, other provisions (e.g., visible emission limits) will be needed to assure that capture systems are properly designed and maintained.

7.2.2 Enforcement of Visible Emission Limits

Visible emission limits are especially useful for limiting fugitive emissions from plant process facilities. Indeed, visible emission limits and equipment standards offer the only viable alternatives for limiting emissions from process facilities controlled by suppression techniques or for ensuring the effective capture of emissions at process facilities controlled by local ventilation. In addition, when used in conjunction with a quantitative emission limit on a control device, opacity limits can be used to ensure that the control device is properly operated and maintained.

The enforcement of visible emission limits is both feasible and inexpensive. Determinations can be made with a minimum of resources and require no special equipment. For opacity determinations using Method 9, only a single trained and certified observer is needed. In the case of Method 22, which assesses the frequency of visible emissions from a source, no special training or certification is required and the equipment needs are limited to an accumulative type stop watch. The only constraint on these methods is that readings cannot usually be made at night, indoors under poor lighting conditions, or during periods of very inclement weather.

7.2.3 Enforcement of Equipment Standards[2]

Equipment standards relating to the design and installation of both equipment and control devices are feasible alternatives for limiting emissions from some of the non-metallic mineral industry processes. For example, the enclosure of conveyor belts, the hooding of screens and crushers and venting through a fabric filter system, or the utilization of water spray systems have been found helpful in reducing emissions. This format for regulation is not quantitative but does insure that emissions will be minimized through proper selection and utilization of equipment. Due to the variations in non-metallic mineral plants, an overall generic-type equipment standard may not be suitable and therefore, should be tailored to a particular plant. Such a regulation can be used in conjunction with both quantitative and visible emission limitations. Enforcement of equipment standards is accomplished through plant inspections and observation by an experienced and trained person. An inspection can be completed in one day by a one or two person team.

Proper operation and maintenance of specified equipment is also required to minimize emissions. Frequent plant inspections and review of maintenance records are required to ensure proper operation.

7.2.4 Enforcement of Fence-line Standards

Ambient air particulate measurements made at a plant's boundary can be used as an enforcement tool to help assess a plant's overall impact on particulate concentration. The feasiblity of such an enforcement method is dependent on the plant configuration, the operating schedule, and on other particulate emission sources in the area. A number of samplers up and down-wind of the property will be required, and these must be operated by trained personnel. Standard procedures which must be carefully followed and documented include:

(a) Location of sampling station(s),

(b) Records of meteorological conditions,

(c) Use of recommended sampling equipment,

(d) Careful determination of gas flow rate and sample time,

(e) Noting of any unusual conditions which may affect sample,

(f) Proper handling of the collected sample and recording on container and filter numbers.

The presence of other particulate sources in the area, especially fugitive sources such as dirt roads or construction activities, will also influence the usefulness of any measurements along a plant boundary. Wind speed and variability will also affect the usefulness of the results. An electrical supply is required to operate the samplers and this may present a problem at remote locations unless a portable electric generator is available.

REFERENCES FOR CHAPTER 7

1. Pit and Quarry Handbook and Buyers Guide. 68th Edition. Pit and Quarry Publications, Inc. 1975-1976. p. A9-12.

2. Technical Guidance for Control of Industrial Process Fugitive Particulate Emissions. U.S. Environmental Protection Agency. Research Triangle Park, N.C. Publication no. EPA-450/3-77-010. March 1977.

8.0 REGULATORY OPTIONS

Available regulatory options for the control of particulate emissions at non-metallic mineral processing plants are discussed in this chapter. The control of both fugitive dust and fugitive process sources are considered. The regulatory options are based on the alternative control methods described in Chapter 3. Each option is discussed from the standpoints of applicability, emission reduction, cost, environmental impacts, and enforcement. In addition, applicable regulatory formats are presented.

8.1 REGULATORY OPTIONS FOR FUGITIVE DUST SOURCES

Fugitive dust emissions are generated by drilling, blasting, loading, conveying, hauling, stockpiling, and the action of wind on haul road, plant yards, and stockpiles. Applicable control techniques include dry collection systems, watering, wet dust suppression, surface treatment with chemical dust suppressants, soil stabilization, and paving. Table 3.1 summarizes the control techniques for fugitive dust emission sources at non-metallic mineral processing plants.

8.1.1 Drilling and Blasting

Two methods are applicable for controlling fugitive dust emissions from drilling operations: water injection and aspiration to a control device. Water injection is a technique in which water and a wetting agent or surfactant is forced into the compressed air stream that flushes the drill cuttings from the hole. It produces a mist that dampens the particles and causes them to agglomerate, and drop at the drill collar rather than becoming airborne. The use of a wetting agent allows the use of less water for effective control, by reducing the surface tension of the untreated water.

Dry collection systems are also used to control drilling emissions. A shroud or hood encircles the drill rod at the hole collar. A vacuum will then capture the emissions and vent them through a flexible duct to a control device, usually a cyclone or baghouse preceded by a settling chamber.

No effective method is available for controlling fugitive emissions from blasting operations. However, as discussed in Section 3.1.2, scheduling blasting during periods of low winds and low inversion potential will help minimize the impact of fugitive emissions.

The environmental, energy, and cost impacts of applying any of the above mentioned control methods have not been assessed.

8.1.2 Haul Roads

Control techniques used to control particulate emissions from haul roads include the following: 1) wetting with water or water plus a surfactant; 2) oiling; 3) application of hydroscopic chemicals (substances that absorb moisture from the air); 4) use of soil stabilizers (water dilutable emulsions of either synthetic or petroleum resins that act as adhesives or binders); 5) paving; 6) use of larger capacity haul vehicles to reduce the number of trips required; and 7) reduction in traffic speed. Because minimal data are available for quantifying particulate emissions from haul roads, the performance and effectiveness of these methods cannot be accurately estimated. The effectiveness of the first four methods will depend on such items as the amount of water or chemical applied, the frequency of application, weather conditions, and conditions of the road being treated. Sweeping or vacuuming will reduce emissions from haul roads that have been paved. Negligible water or solid waste impacts are expected from the application of these control methods.

Minimal data are also available on increased energy use related to these control methods. However, the energy impact would be small compared to the energy requirements for quarry and plant operations.

The capital and annualized costs associated with a number of the control methods for haul roads are presented in Tables 4.21 and 4.22. At the small size plants, the capital investment for oiling of $40,000 and annualized

costs of $40,500 make it the most expensive of the applicable control methods. However, for the plants larger than 270 Mg/hr (300 TPH), the capital and annualized costs associated with speed reduction are 5 to 20 times more expensive than the other methods.

8.1.3 Conveyors

The two methods available for the control of fugitive dust emissions from conveyor systems are sheet metal, plastic or canvas coverings and wet dust suppression. If the entire conveyor is enclosed, particulate emissions should be completely eliminated. Minimal data are available on the effectiveness of partially enclosing the conveyors or wet dust suppression systems. No water or solid waste impacts are expected from the application of these control methods. No increase in energy usage will result from enclosing the conveyors unless the emissions are vented to a baghouse. The increase in energy usage associated with the use of wet dust suppression systems would be small compared to the energy requirements of plant operations.

As stated in Section 4.3.4, costs of retrofitting covers on existing conveyors may range from $157 to $316 per meter ($47 to $95 per foot) of conveyor length, depending on the amount of work required and the type of covering. The costs associated with wet dust suppression systems are discussed in Section 8.2.

8.1.4 Storage Piles

The control methods available for the control of fugitive dust emissions from storage piles include stone ladders, stacker conveyors, plastic or canvas coverings, the use of material or man-made windbreaks, and wet dust suppression. Similar to the other sources of fugitive dust emissions, minimal data are available for quantifying emissions from storage piles or on the effectiveness of the control methods discussed. No water or solid waste impacts are expected from the use of these control methods. The increase in energy usage associated with these control methods would be small compared to the energy requirements of plant operations.

Capital costs of control for storage piles are estimated at $27,000 per telescoping chute, $1,050 per Mg.(950 per ton) of throughput for a movable stacker, and $140 to $350 per m^3 ($110 to $270 per yd^3) for enclosures (see Table 4.24). Application costs for spraying storage piles with a wetting agent are estimated to range from $0.01 to $0.07 per Mg ($0.01 to $0.06 per ton) depending on the type of chemical used, the number of storage piles, and the frequency of spraying. The cost of elevated sprinkler systems ranges from a few thousand dollars to $27,000 depending on the plant.

8.1.5 Alternative Formats

Potential regulatory formats for drilling emissions differ from formats applicable for other fugitive dust sources. For drilling operations controlled by dry collection systems, regulatory formats include equipment standards, visible emission limits, and quantitative emission limits. Equipment standard specifications could include air-to-cloth ratio, cleaning method, pressure drop, and aspiration rate.

A concentration limit for a baghouse should be equivalent to that achievable by baghouses on other non-metallic mineral processing facilities. Limitations on visible emissions ensure proper operation of the baghouse and maintenance of an adequate aspiration rate at the capture point. However, because drilling is an intermittent operation and emissions can vary because of climatic conditions, care must be taken to obtain readings under representative conditions.

Applicable regulatory formats for drilling operations controlled by water injection are a visible emissions limit and equipment specifications. A visible emissions limit will ensure proper design, operation, and maintenance of water injection systems. The only important equipment specification is the rate of water injection which ensures that sufficient water is used for effective control.

Potential regulatory formats for other fugitive dust sources are visible emissions limits, equipment specifications, and work practice specifications. Quantiative emission limits are not applicable because no practical method of measurement is available. The use of visible emissions limits in terms of

opacity or percent of time when emissions are visible are useful for fugitive sources of particulates. However, care must be taken to obtain readings under representative conditions because of the intermittent operation of some of the processes and the variation in emissions caused by climatic conditions. In order to specify visible emissions limits for fugitive dust sources in the non-metallic mineral processing industry, test programs would be required for monitoring opacity and the percent of time of visible emissions for the different control techniques and weather conditions.

Because of the absence of visible emissions data, equipment and work practice standards may be the most suitable formats. Equipment standards can be specified for some fugitive dust sources, such as enclosures for open conveyors. These standards are not quantitative but would ensure that emissions will be minimized through proper selection and utilization of equipment. A work practice standard could be used to specify the number of times a haul road is to be watered and how much water is to be used based on climatic variables.

Possible regulations may require the implementation of one or more of the control alternatives. The following model performance standard regulation for fugitive dust sources associated with non-metallic mineral processing incorporates source specific control measures with a discretionary provision:

(a) No person shall operate or maintain, or cause to be operated or maintained, any premise, open area, right-of-way, storage pile of materials, or any other process that involves any handling, transporting, or disposition of any material or substance likely to be scattered by the wind, without taking reasonable precautions, as approved by the regulating agency, to prevent particulate matter from becoming airborne.

(b) In obtaining approval under subsection (a) of this section, the regulating agency may impose one or more of the measures and any operating conditions it deems necessary to attain and maintain compliance with the provisions of this section.

8.2 REGULATORY OPTIONS FOR FUGITIVE PROCESS SOURCES

Process sources in a non-metallic mineral processing plant include crushers, grinding mills, screening operations, bucket elevators, conveyor belt transfer points, bagging operations, storage bins, and truck and railcar loading stations. Methods for control of plant process emissions include wet

dust suppression, dry collection, and a combination of the two. Table 3.1 summarizes the control techniques for fugitive process sources. Because of the cost involved, a control system is designed to control all of the process sources at a plant. It is not possible to break the cost down on a per piece of equipment basis. Therefore, all of the discussion in this section will apply to the control of the entire processing plant.

8.2.1 Fugitive Process Sources and Control Methods

With the exception of bagging facilities, all particulate sources at a non-metallic mineral processing plant can be controlled by using wet dust suppression systems, dry collection systems, or a combination of the two. Because it is necessary to keep the product dry at the bagging operation, only dry collection systems can be used to control emissions at these operations.

Dry collection systems consist of an exhaust system with hoods and enclosures to capture emissions and ducting and fans to convey the captured emissions to a collection device where particulates are removed before the air stream is exhausted to the atmosphere. Depending on the physical layout of the plant, emission sources may be ducted to a single centrally located collector or to a number of strategically placed units. When dry collection is employed, the most common device for non-metallic mineral processing facilities is the baghouse (fabric filter). Although high energy scrubbers and electrostatic precipitators could achieve results similar to those of a baghouse, these methods are not currently used in the industries.

As discussed in Chapter 3, mechanical-shaker collectors which require periodic shutdown for cleaning after 4 or 5 hours of operation are used in most crushing plant applications. These units are normally equipped with cotton sateen bags and operated at an air-to-cloth ratio of 2:1 to 3:1. A cleaning cycle, normally actuated automatically when the exhaust fan is turned off, usually requires only 2 to 3 minutes of bag shaking.

For applications where it may be impractical to turn off the exhaust fan, baghouses with continuous cleaning are employed. Compartmented mechanical-shaker units or jet pulse units may be used in these cases. Jet pulse units usually use wool or synthetic felted bags for a filtering media and may be operated at an air-to-cloth ratio of as high as 6:1 to 10:1.

As discussed in Chapter 3, dry collection systems are capable of achieving high levels of emission reduction. Figure 3.13 summarizes the test data from various non-metallic processing facilities using properly operated baghouses. Although impractical to quantify, essentially complete capture can be achieved if adequate hooding and ventilation rates are applied. Table 3.5 summarizes the test data on visible emissions escaping capture at hoods and enclosures.

Visual observations can be used to provide some indication of the effectiveness of wet dust suppression techniques. Visible emissions measurements were made by EPA at a variety of process sources at five plants where particulate emissions are controlled by wet dust suppression. The results obtained indicate that emissions from crushers are generally greater than those from non-crusher sources. Visual observations made at twelve crushers including jaw, impact and cone type crushers showed that emissions were generally continuous (visible over 70 percent of the time on the average) and typically exceeded 10 percent opacity. In contrast, emissions from non-crusher sources (screens and conveyor transfer points) were generally intermittant (visible less than 10 percent of the time) and typically less than 5 percent opacity based on six-minute averaging.

Performance levels for combination systems are assumed to be equivalent to performance demonstrated by wet dust suppression systems or particulate emission control systems alone.

8.2.2 Environmental Impacts

Air--

The application of baghouses to non-metallic mineral process sources should result in a substantial reduction in particulate matter emissions. Based on the estimates developed in Section 5.1, greater than 99 percent reduction over uncontrolled emissions is projected. Since particulate emissions from process sources controlled by wet dust suppression cannot be quantified, no quantitative data are available on their effectiveness. In

addition, for the same reason, it is not possible to quantify the emission reduction obtainable through the use of combination systems which use baghouses and wet dust suppression.

Water--

The use of baghouses to control particulate matter emissions will generate no water effluent. In cases where wet dust suppression techniques could be used, the water adheres to the material processed until it evaporates. Wet suppression systems, therefore, would not result in a water discharge.

Solid Waste--

Where wet dust suppression can be used, no solid waste disposal problem exists over that resulting from normal operation. When baghouses are used, about 1.4 megagrams (1.6 tons) of solid waste are collected for every 250 megagrams (278 tons) processed. In many cases this material can be recycled back into the process, sold, or used for a variety of purposes. Where no market exists for the collected fines, they are typically disposed of in an isolated location in the quarry. No subsequent air pollution problems should develop provided the waste pile is protected from wind erosion. Therefore, wet suppression systems and baghouses have a neglible impact as far as solid waste disposal is concerned.

Noise--

When compared to the noise emanating from crushing and grinding process equipment, any additional noise from properly designed exhaust fans or pumps for the control system will be insignificant.

8.2.3 Energy Impact

The only significant increase in energy consumption over an uncontrolled plant occurs when a baghouse is used for particulate collection. The additional energy is for operation of fans, air compressors, and screw conveyors associated with the baghouse. The increase in energy is estimated to range from 5 to 19 percent higher than the uncontrolled plant, as shown in Table 5.2. The additional energy required to operate the wet dust suppression system is estimated to be less than one percent.

8.2.4 Cost Impact

The overall costs of the control methods for non-metallic mineral processing plants are presented in Chapter 4. The use of baghouses for particulate emission control is the most expensive control technique (both in capital investment and annualized costs) followed by the combination systems. Wet suppression systems are the least expensive of the three.

The capital investment (in 1980 dollars) for baghouses for the different model plant sizes ranges from $127,000 to $461,000 compared to a range of $104,000 to $288,000 for combination systems and $61,000 to $133,000 for wet dust suppression systems. The annualized costs for baghouses ranges from $29,000 to $119,000 compared to a range of $25,000 to $69,000 for combination systems and $13,000 to $30,000 for wet dust suppression systems.

8.2.5 Alternative Formats

Dry collection systems--

Two different formats could be selected to limit fugitive emissions at the points of capture: an equipment standard or a visible emission standard. An equipment standard would require that emission points be enclosed or equipped with hoods so that emissions would be captured and passed through a control device.

The second alternative for controlling these emissions is a visible emissions standard. A visible emissions standard would either specify the maximum allowable opacity or limit the amount of time that visible emissions are allowed. A visible emissions standard could be applied to any process operation regardless of whether or not it is enclosed.

Formats for regulations for the control device include equipment standards and quantitative emission limits on the mass emissions per unit of production or the concentration of particulate matter in the effluent gases. For equipment standards on the normal control device (baghouse) the cleaning method, air-to-cloth ratio, pressure drop, configuration of capture hoods and enclosures, and capture velocities would need to be specified. Compliance with these specifications would be determined by the control agency as part of their permit or licensing program.

A visible emissions standard that either specifies the maximum allowable opacity or limits the amount of time that visible emissions are allowed is most appropriate for the outlet of the control device in addition to one of the standards discussed above.

Concerning quantitative emission limits, a mass emission standard may appear more meaningful in the sense that it relates directly to the quantity of emissions discharged into the atmosphere. However, a major disadvantage of a mass emission standard for non-metallic mineral processing plants is that, typically, the production or feed rate of a process operation is not measured over the short term. Therefore, enforcement of a mass emission standard would require that devices which measure process weight rates be installed on belts feeding process equipment.

Concentration emission limits would be easier to implement than the mass emission limits per unit of production because they do not require the installation of a weight measuring device.

Wet dust suppression systems--

Two different formats are possible for regulations for wet dust suppression systems: equipment standards and visible emissions standards. Because it is not possible to quantify the emission reductions achievable by wet dust suppression systems, quantitative emission limits are not possible. If equipment standards were applied, specifications that could be tailored to a particular plant would include the quantity of spray bars and nozzles, the configuration of nozzles, spray pressure, and the amount of moisture to be added.

Visible emissions limits could be applied to sources controlled by wet dust suppression. As discussed in Chapter 3, visible emissions for non-crusher sources controlled by wet dust suppression were found to be intermittent while those from crushers were generally continuous. Because of this distinction, a different format for limiting visible emissions should be applied to each class of sources. For non-crusher sources characterized by intermittent emissions, a visible emissions limitation on the amount of time emissions are visible is more appropriate. For crusher sources with continuous emissions, an opacity limit is more appropriate. These visible emissions and opacity

limits should insure that sufficient water is used in the wet suppression system to provide effective control of particulate matter emissions.

8.3 SUMMARY

Table 8-1 summarizes the environmental and cost impacts resulting from the application of alternative emission control systems. Impacts are rated as beneficial or adverse; magnitudes are ranked as negligible, small, moderate, or large; and durations are classified as short term, long term, or irreversible.

TABLE 8-1. SUMMARY OF ENVIRONMENTAL AND ECONOMIC IMPACTS

Alternative emission control systems	Air impact	Water impact	Solid waste impact	Energy impact	Noise impact	Occupational health impact	Cost impact
Wet suppression for crushed stone plant process facilities	+3**	0	0	-1	0	+3**	-2**
Dry collection for crushed stone plant process facilities	+3**	0	-2**	-2	-1**	+3**	-2 to -3**
Combination wet and dry for crushed stone plant process facilities	+3**	0	-2**	-2	-1**	+3**	-2**
Dry collection for drilling equipment	+2**	0	-1**	-1	-1**	+2**	-2**
Liquid injection for drilling equipment	+2**	0	0	-1	0	+2**	-1**

Key:
+ Beneficial impact
- Adverse impact
0 No impact

1 Negligible impact
2 Small impact
3 Moderate impact
4 Large impact

* Short-term impact
** Long-term impact
*** Irreversible impact

APPENDIX A

SUMMARY OF TEST DATA

A test program was undertaken by EPA to evaluate the best particulate control techniques available for controlling particulate emissions from non-metallic mineral plant process operations including crushers, screens and material handling operations, especially conveyor transfer points. In addition, a control technique for grinding operations was also evaluated. This appendix describes the process operations tested (their operating conditions, characteristics of exhaust gas streams and, where applicable, deviations from prescribed test procedures) and summarizes the results of the particulate emission tests and visible emission observations.

Sixteen baghouse collectors controlling process operations at five crushed stone installations (three limestone and two traprock), one kaolin, and one fuller's earth plant were tested using EPA Reference Method 5 except as noted in the facility descriptions for determination of particulate matter from stationary sources. Baghouse collectors utilized to control particulate emissions from grinding operations at a feldspar, gypsum, and two talc plants were also tested, but EPA Reference Method 17 was used for determination of particulate matter. Results of the front-half catches (probe and filter) from the particulate emission measurements conducted are shown in Figure A-1 and the complete results are summarized in the Tables herein.

Visible emission observations were made at the exhaust of each of the above control devices in accordance with procedures recommended in EPA

Reference Method 9 for visual determination of the opacity of emissions from stationary sources.

At the hoods and collection points for the process facilities, the visible emission opacity observations were made in accordance with procedures recommended in EPA Reference Methods 9 and 22 and the data are presented in terms of percent of time equal to or greater than a given opacity or in percent of total time of visible emissions as in Table 3.5. Visible emission observations were also made at four crushed stone, one sand and gravel plants and a feldspar crushing plant where particulate emissions are controlled by dust suppression techniques. The results of these tests are given in Tables 97 through 111.

DESCRIPTION OF FACILITIES

A1. Primary crushing stage incorporating a pan feeder, vibrating grizzly, impact breaker, T-bar belt feeder and a primary belt conveyor. The impactor is rated at 1,000 TPH and used to reduce run-of-quarry limestone (cement rock) to 2 1/2-inch minus. Particulate emissions generated at various points are confined, captured and vented to a jet pulse type baghouse for collection. Tests were conducted only during periods when the process was operating normally. Particulate measurements were performed using EPA Method 5. Visible emission observations were made at the baghouse exhaust and at capture points in accordance with EPA Method 9.

A2. Primary scalping screen used for scalping the primary crusher product of facility A1. The plus 2 1/2-inch oversize is chuted to a belt conveyor and returned to the primary for recrushing. The screen throughs are also discharged to a conveyor and transported to a storage facility. Particulate emissions generated from the top of the screen, which is totally enclosed, and from both chute-to-belt transfer points are aspirated to a jet pulse baghouse for collection. Tests, using EPA Method 5, were

conducted simultaneously with those at facility A1. Sampling during all three tests runs reported herein was overisokinetic. Visible emission observations were made at the baghouse exhaust using EPA Method 9.

A3. Conveyor transfer point at the tail of an overland conveyor, also located at installation A1. The 30-inch belt conveyor has a 900 TPH capacity at a belt speed of 700 FPM. The transfer point is enclosed and emissions vented to a small baghouse unit for collection. Three particulate samples were collected using EPA Method 5. Visible emission observations were made at the baghouse outlet and at the transfer point using EPA Method 9.

A4. The secondary crushing and screening stage at installation A1 consists of a vibrating screen and a cone crusher. Minus 2 1/2-inch material is fed to the screen at about 165 TPH where it is separated in two fractions, plus 3/4-inch and 3/4-inch minus. The oversize fraction is discharged to the cone crusher and reduced to 3/4-inch. The crusher product and screen throughs are then conveyed to a milling circuit. Dust control is effected by capturing and venting emissions from the screen and crusher to a jet pulse baghouse for collection. Both particulate measurements and visible emission observations were made at the collector outlet using EPA Methods 5 and 9, respectively.

B1. Primary impact crusher used for the initial reduction of run-of-quarry limestone rock to three inches. The normal production rate through this primary crushing stage is 350 TPH. Particulate emissions are collected from the impact crusher at its discharge hopper and from the discharge hopper to primary conveyor belt transfer point and then controlled by a fabric filter

collector. The fabric filter is mechanically shaken twice daily for cleaning. EPA Method 5 was used for particulate measurements and EPA Method 9 was used for visible emission readings at the collector exhaust and at the impact crusher.

B2. Secondary and tertiary crushing and screening facilities at the same installation as B1. These consist of a scalping screen, a 4-foot cone crusher, two 3-foot cone crushers, a hammermill used to produce agstone and two final sizing screens. The plant has a 300 TPH design capacity, crushing to 1 1/2-inch minus, including 60 TPH of agstone. Dust control throughout this plant is affected by enclosing or hooding dust producing points and venting captured emissions to a fabric filter for collection. The collector is mechanically shaken twice daily for cleaning. Pickup points include the top of the scalping screen, both the feed and discharge of all three cone crushers, the discharge of the hammermill, the top of both finishing screens, five product bins and six conveyor transfer points. Three particulate measurements were made in accordance with EPA Method 5. In addition, visible emission observations were made at the baghouse exhaust and at the process facilities controlled using EPA Method 9.

B3. The same facility as B2, except that particulate emission measurements were made using an in-stack filter. Testing was conducted simultaneously with that described in B2.

C1. Limestone crushing plant consisting of a primary jaw crusher, scalping screen and hammermill. The rated capacity of the plant is 125 TPH. End products produced range from 1 1/2-inch minus dense-graded road base stone to minus 1/8-inch screenings. Particulate emissions are controlled by a mechanical shaker type baghouse. Collection points include the primary crusher discharge, the scalping screen throughs to stacking

conveyor transfer point, and both the hammermill feed and discharge. Tests were conducted using EPA Methods 5 and 9.

C2. Two 3-deck vibrating screens used for final sizing at the same installation as C1. Both screens are totally enclosed and particulate emissions collected from the top of both screens, at the feed to both screens, and at both the head and tail of a shuttle conveyor between the screens are vented to a mechanical shaker type baghouse. Again, tests were conducted in accordance with EPA Methods 5 and 9.

D1. Secondary and tertiary crushing and screening facilities used for processing traprock at 250 TPH. The process facilities include a scalping screen, a 4-foot secondary cone crusher, two sizing screens and two 4-foot tertiary cone crushers. All process facilities are enclosed and particulate emissions are vented to one of two baghouses for collection. The baghouses are exhausted through a common stack. Particulate measurements were conducted using EPA Method 5. Visible emission observations using EPA Method 9 were also made at the collector exhaust and at the process facilities controlled.

D2. Finishing screen at the same installation as facility D1. The screen is totally enclosed and emissions collected from the top of the screen enclosure, all screen discharge points, and several conveyor transfer points are vented to a fabric filter. Tests conducted were identical to those at D1 and were performed simultaneously.

E1. Tertiary crushing and screening facilities at a 375 TPH traprock installation. Process facilities include two sizing screens, four 4 1/4-foot

cone crushers and several conveyor transfer points. Both screens are enclosed and emissions are collected by the enclosures and at the throughs discharge. The tertiary cone crushers are hooded and vented at both feed and discharge points. Captured emissions are collected by a jet pulse type baghouse. Tests using EPA Method 5 were conducted during periods of normal operation. Although desirable, the pressure drop across the baghouse could not be monitored because the pressure gauge was inoperative. Visible emission observations were also made of the baghouse exhaust using EPA Method 9.

E2. Five screens used for final sizing and eight storage bins at the same installation as E1. All screens and bins are totally enclosed and emissions vented to a jet pulse type baghouse for collection. Tests conducted were identical to and performed simultaneously with those at facility E1.

F1. Tertiary crushing and screening facilities used to reduce run-of-quarry trap rock. Particulate emissions are controlled by spraying water at critical dust producing points in the process flow. Two to three percent moisture is added to the material to suppress dust. Visible emission observations were made in accordance with EPA Method 9 procedures.

G1. Grinding system incorporating a belt feeder, ball mill, bucket elevator, separator and a belt conveyor. The ball mill is used to reduce feldspar to minus 200 mesh. Particulate emissions generated at various points are confined, captured and vented to a reverse air type baghouse for collection. Particulate measurements were performed using EPA Method 17. Visible emission observations were made at the baghouse exhaust and all capture points in accordance with EPA Method 9.

G2. Crushing facilities (primary and secondary) used to reduce feldspar to minus 1.5 inches. Dust control is affected by the suppression techniques. Surface moisture contents were 1.6 to 1.8 percent at the primary crusher discharge, 1.4 to 1.5 percent at the secondary crusher feed, and 1.0 percent at the secondary crusher discharge conveyor. Visible emission observations were made at all process facilities in accordance with EPA Method 9 procedures.

H1. Raymond roller mill used to grind gypsum. The ground product from the mill is air-conveyed to a cyclone collector for product recovery. The air is returned to the mill. Excess air is vented to a baghouse. Visible emission observations were made to determine leaks from the system in accordance with EPA Method 9 procedures.

H2. Same facility as H1. Particulate measurements and visible emission observations were made at the baghouse exhaust in accordance with EPA Methods 5 and 9.

I. Bagging operation used to package ground mica. Particulate emissions are controlled by a baghouse. Visible emission observations were made at the capture point in accordance with EPA Method 9 procedures.

J1. Crushing (primary and secondary), grinding (pebble mill and vertical mill) and bagging operations at a talc processing plant. Particulate emissons are controlled by a baghouse. Visible emission observations were made at the capture points in accordance with EPA Method 9 procedures.

J2. Same facility as J1. Particulate measurements and visible emission observations were made at the baghouse exhaust in accordance with EPA Methods 5 and 9.

K. Pebble mill used to grind talc. Captured emissions are vented to a pulse type baghouse for collection. Particulate measurements and visible emission observations were made at the baghouse exhaust in accordance with EPA Methods 5 and 9.

L1. Raymond Impact Mill used to grind kaolin. Captured emissions are exhausted to a baghouse for collection. EPA Methods 5 and 9 were used for particulate measurement and visible emission observation at the baghouse stack, respectively.

L2. Roller Mill used at same plant as L1. Further grinding of kaolin is accomplished. Collection of captured emissions takes place in a baghouse which was tested for the same parameters as L1, again by EPA Methods 5 and 9.

M1. Roller mill used to grind fuller's earth clay. Captured emissions are exhausted to a baghouse for collection. Particulate measurements and visible emission observations were made at the baghouse exhaust in accordance with EPA Methods 17 and 9.

M2. Fluid energy mill used to grind fuller's earth clay at same plant as M1. Captured emissions are exhausted to a baghouse for collection. EPA Methods 17 and 9 were used for particulate measurement and visible emission observation at the baghouse stack, respectively.

N. Kaolin rail car loading operation. Three complete rail car loadings were evaluated for fugitive emissions in accordance with EPA Method 22 test procedures. A baghouse (collection system) is used to collect dust that is captured in the loading area.

P. Facility P produces crushed stone used primarily for road construction purposes. The processing operation is located in the bottom of an open quarry. The quarried materials are carried by truck to the upper rim of the

pit where they are dumped into hoppers which feed the processing equipment. The finished product is transported back out of the quarry by belt conveyor.

Visible emission measurements were conducted at the primary (jaw), secondary (impact), and tertiary (cone) crushers, two process screens, and one conveyor transfer point by means of EPA Reference Methods 9 and 22. All process sources of emissions are directly or indirectly controlled by means of a wet suppression system.

Q. This facility produces two grades of rock for road-base and decorative stone, respectively. The ore is obtained from an open mining operation at the top of a mountain, and the process equipment is permanently installed in a descending arrangement from the mine site to the bottom of the mountain. The processed rock is accumulated in bins at the lower level for subsequent truck loading.

Visible emission measurements using the same techniques as Facility P were conducted at the primary (jaw), and secondary (cone) crushers, three process screens, and one conveyor transfer point all controlled by means of a wet suppression system.

R. A fully portable crushing plant processes bank-run material for road construction and as concrete component. Ore is removed from a gravel bank and trucked to the bank top for dumping into the initial screens before the primary crushers. Wet suppression techniques are used to control fugitive dust emanating from the processing of the material.

EPA Reference Methods 9 and 22 were used to measure visible emissions from primary (jaw), and secondary (cone) crushers, three process screens, and two conveyor transfer points.

S. The facility produces two grades of crushed limestone. The plant is

relatively new with all process equipment located at ground level. One jaw crusher, two cone crushers, two process screens and two conveyor transfer points are all directly or indirectly controlled by means of wet suppression systems.

EPA Reference Methods 9 and 22 were employed to measure visible emissions emanating from the above named process sources.

T. A large semi-portable rock crushing facility processing large-size grades of crushed limestone was tested for visible emissions by means of EPA Reference Methods 9 and 22.

The sources tested were the primary and secondary (cone) crushers, one process screen, one conveyor transfer point, and one storage bin. All sources tested are controlled by the same techniques as Facilities P, Q, R, and S.

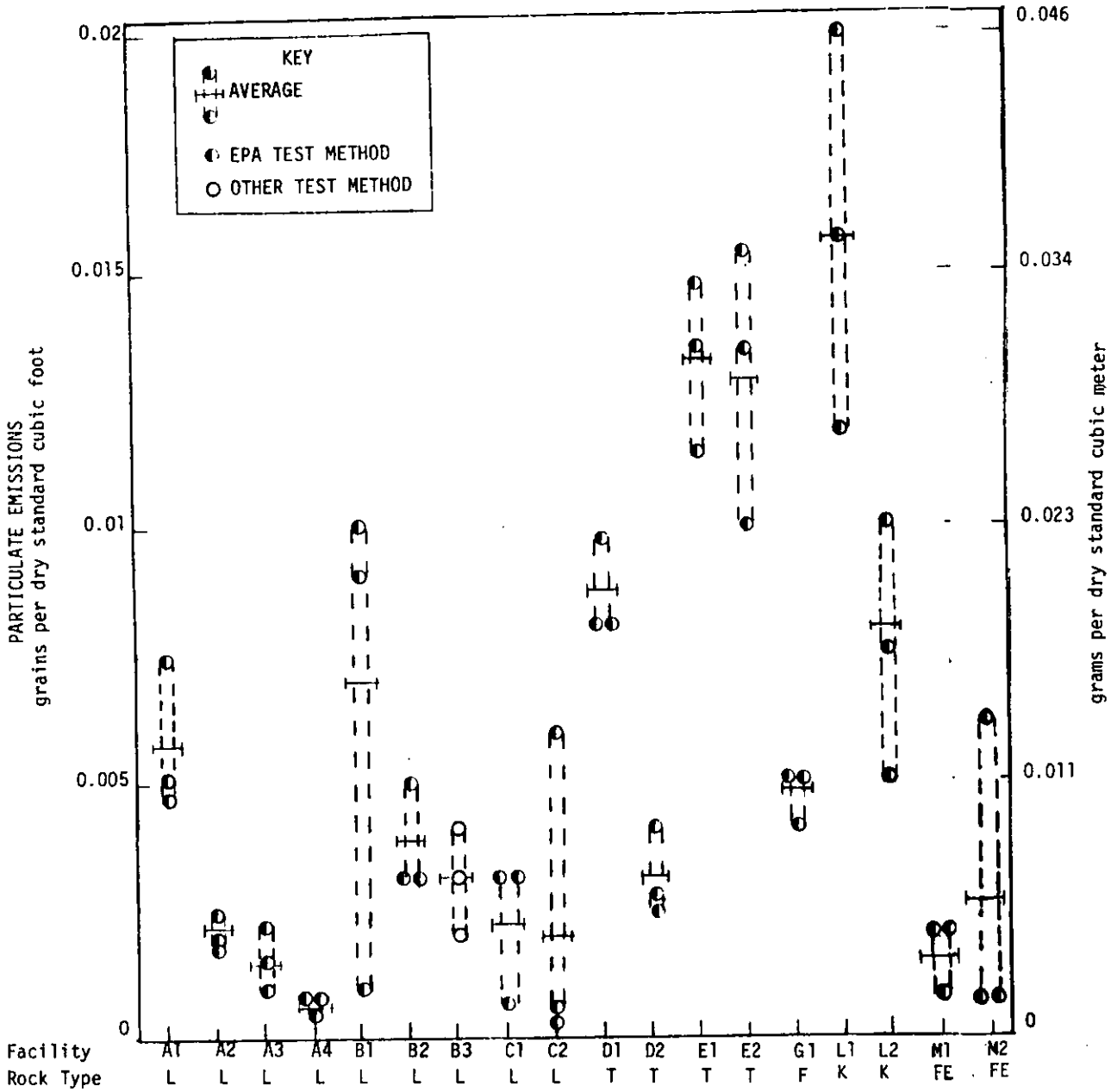

Figure A-1. Particulate emissions fron non-metallic minerals processing operations.

Table 1
FACILITY A1

Summary of Results

Run Number	1	2	3	Average
Date	6/10/74	6/11/74	6/12/74	-
Test Time-minutes	400	320	240	320
Production rate - TPH (1)	995	1027	1010	1011
Stack Effluent				
Flow rate - ACFM	26430	26653	27142	26472
Flow rate - DSCFM	22351	22140	22502	22331
Temperature - °F	81.0	88.0	88.0	85.7
Water vapor - Vol.%	2.5	3.0	3.3	2.9
Visible Emissions at Collector Discharge - Percent Opacity		See Tables 2 and 3		
Particulate Emissions				
Probe and Filter Catch				
gr/DSCF	0.00471	0.00504	0.00727	0.0056
gr/ACF	0.00398	0.00419	0.00602	0.0047
lb/hr	0.90	0.96	1.40	1.07
lb/ton	0.00091	0.00102	0.00139	0.0011
Total Catch				
gr/DSCF (2)	-	0.00597	0.00839	0.0071
gr/ACF	-	0.00495	0.00695	0.0059
lb/hr	-	1.13	1.62	1.38
lb/ton	-	0.00121	0.00160	0.0014

(1) Based on throughput through primary crusher.
(2) Back-half sample for run number 1 was lost.

TABLE 2

FACILITY A1

Summary of Visible Emissions[1]

Date: 6/4/74 - 6/5/74

Type of Plant: Crushed Stone - Primary Crusher

Type of Discharge: Stack

Distance from Observer to Discharge Point: 75 ft.

Location of Discharge: Baghouse

Height of Observation Point: Ground-level

Height of Point of Discharge: 14 ft.

Direction of Observer from Discharge Point: N.E.

Description of Background: Grey building

Description of Sky: Clear

Wind Direction: East

Wind Velocity: 0 - 5 mi/hr.

Color of Plume: None

Detached Plume: No

Duration of Observation: 6/4/74 - 78 minutes
6/5/74 - 210 minutes

SUMMARY OF AVERAGE OPACITY[1]

Set Number	Time		Opacity	
	Start	End	Sum	Average
1 through 6	8:50	9:26	0	0
7 through 9	11:23	11:41	0	0
10 through 13	12:12	12:36	0	0
14 through 48	8:11	11:41	0	0

Readings were 0 percent opacity during all periods of observation.

[1]Two observers made simultaneous readings.

TABLE 3

FACILITY A1

SUMMARY OF VISIBLE EMISSIONS[1]

Date: 7/8/75 - 7/9/75

Type of Plant: Crushed stone (cement rock)

Type of Discharge: Fugitive

Location of Discharge: Primary impact crusher discharge

Height of Point of Discharge: 6 feet

Distance from Observer to Discharge Point: 15 feet

Description of Background: Grey wall

Height of Observation Point: Ground level

Description of Sky: N.A. (indoors)

Direction of Observer from Discharge Point: SE

Wind Direction: N.A.

Wind Velocity: No wind (indoors)

Color of Plume: White

Detached Plume: No

Duration of Observation: 7/8/75 - 2 hours
7/9/75 - 2 hours

Summary of Data:

Opacity, Percent	Total Time Equal to or Greater Than Given Opacity		Opacity, Percent	Total Time Equal to or Greater Than Given Opacity	
	Min.	Sec.		Min.	Sec.
5	3	30	55	-	-
10	0	30	60	-	-
15	0	15	65	-	-
20	0	15	70	-	-
25	0	0	75	-	-
30	-	-	80	-	-
35	-	-	85	-	-
40	-	-	90	-	-
45	-	-	95	-	-
50	-	-	100	-	-

Sketch Showing How Opacity Varied With Time:

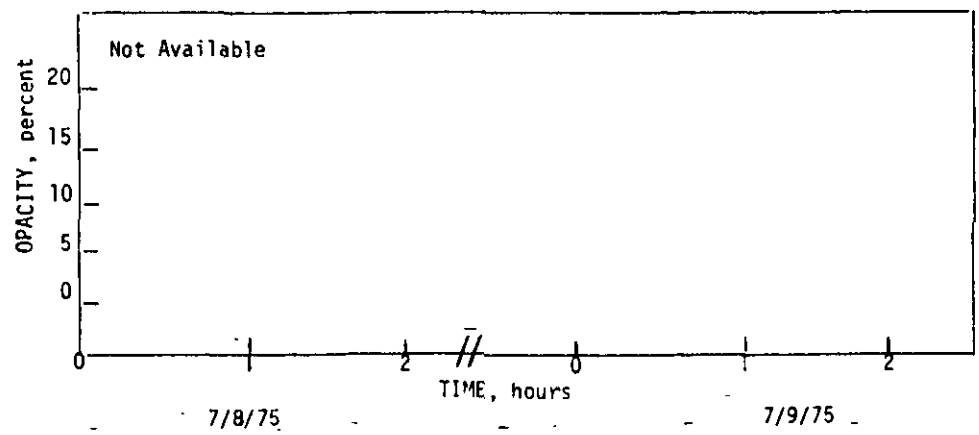

(1) Two observers made simultaneous readings, the greater of their readings is reported.

TABLE 4

FACILITY A2

Summary of Results

Run Number	1	2	3	Average
Date	6/10/74	6/11/74	6/12/74	-
Test Time - Minutes	400	320	240	320
Production Rate - TPH(1)	965	1023	1056	1015
Stack Effluent				
Flow rate - ACFM	15797	15771	15866	15811
Flow rate - DSCFM	13368	13246	13196	13270
Temperature - °F	90.0	90.0	94.0	91.3
Water vapor - Vol. %	1.4	2.1	2.5	2.0
Visible Emissions at Collector Discharge - % Opacity		SEE TABLE 5		
Particulate Emissions (2)				
Probe and filter catch				
gr/DSCF	0.00176	0.00188	0.00222	0.00195
gr/ACF	0.00149	0.00158	0.00184	0.00164
lb/hr	0.20	0.21	0.25	0.22
lb/ton	0.00021	0.00024	0.00024	0.00023
Total catch (3)				
gr/DSCF	-	0.00235	0.00314	0.00275
gr/ACF	-	0.00197	0.00261	0.00224
lb/hr	-	0.27	0.36	0.32
lb/ton	-	0.00030	0.00034	0.00032

(1) Throughput through primary crusher.
(2) All three test runs were over-isokinetic.
(3) Back-half sample for run number 1 was lost.

TABLE 5

FACILITY A2

Summary of Visible Emissions[1]

Date: 6/10/74 - 6/11/74

Type of Plant: Crushed Stone - Primary Screen

Type of Discharge: Stack

Distance from Observer to Discharge Point: 60 ft

Location of Discharge: Baghouse

Height of Observation Point: Ground-level

Height of Point of Discharge: 10 ft.

Direction of Observer from Discharge Point: East

Description of Background: Sky

Description of Sky: Clear

Wind Direction: Southwest

Wind Velocity: 0 - 2 mi/hr.

Color of Plume: None

Detached Plume: No

Duration of Observation: 6/10/74 - 192 minutes
6/11/74 - 36 minutes

SUMMARY OF AVERAGE OPACITY[1]

Set Number	Time		Opacity	
	Start	End	Sum	Average
1 through 11	10:35	11:41	0	0
12 through 32	12:30	2:36	0	0
33 through 38	9:40	10:16	0	0

Readings were 0 percent opacity during all periods of observation.

[1]Two observers made simultaneous readings.

TABLE 6

FACILITY A3

Summary of Results

Run Number	1	2	3	Average
Date	6/10/74	6/11/74	6/12/74	-
Test Time - Minutes	360	288	288	312
Process Weight Rate - TPH	910	915	873	899
Stack Effluent				
Flow rate - ACFM	2303	2313	2422	2346
Flow rate - DSCFM	1900	1902	2003	1935
Temperature - °F	98.0	101.0	97.0	98.7
Water vapor - Vol. %	2.4	2.4	2.3	2.4
Visible Emissions at Collector Discharge - Fugitive (% Opacity)		SEE TABLES 7		
Particulate Emissions				
Probe and filter catch				
gr/DSCF	0.00095	0.00162	0.00207	0.00155
gr/ACF	0.00078	0.00134	0.00171	0.00128
lb/hr	0.02	0.03	0.04	0.03
lb/ton	0.00002	0.00003	0.00004	0.00003
Total catch (1)				
gr/DSCF	-	0.00190	0.00259	0.00224
gr/ACF	-	0.00156	0.00214	0.00185
lb/hr	-	0.03	0.04	0.035
lb/ton	-	0.00003	0.00005	0.00004

(1) Back-half sample for run number 1 was lost.

TABLE 7

FACILITY A3

Summary of Visible Emissions[1]

Date: 6/11/74

Type of Plant: Crushed Stone - Conveyor Transfer Point

Type of Discharge: Stack

Distance from Observer to Discharge Point: 60 ft

Location of Discharge: Baghouse

Height of Observation Point: Ground-level

Height of Point of Discharge: 8 ft.

Direction of Observer from Discharge Point: Nort

Description of Background: Grey apparatus

Description of Sky: Clear

Wind Direction: Westerly

Wind Velocity: 0 - 10 mi/hr.

Color of Plume: None

Detached Plume: No

Duration of Observation: 240 minutes

SUMMARY OF AVERAGE OPACITY[1]

Set Number	Time		Opacity	
	Start	End	Sum	Average
1 through 30	10:40	1:40	0	0
31 through 40	1:45	2:45	0	0

Readings were 0 percent opacity during all periods of observation.

[1]Two observers made simultaneous readings.

TABLE 8

FACILITY A4

Summary of Results

Run Number	1	2	3	Average
Date	6/6/74	6/7/74	6/8/74	-
Test Time - Minutes	320	320	320	320
Production Rate - TPH	170	162	152	163
Stack Effluent				
Flow rate - ACFM	10579	9971	11045	10532
Flow rate - DSCFM	9277	8711	9656	9214
Temperature - °F	81.0	77.0	80.0	79.3
Water vapor - Vol. %	2.3	2.2	2.1	2.2
Visible Emissions at Collector Discharge - % Opacity		SEE TABLES 9 & 10		
Particulate Emissions				
Probe and filter catch				
gr/DSCF	0.00036	0.00075	0.00074	0.00062
gr/ACF	0.00031	0.00065	0.00065	0.00054
lb/hr	0.03	0.06	0.06	0.05
lb/ton	0.00017	0.00034	0.00041	0.00031
Total catch				
gr/DSCF	0.00047	0.00104	-	0.00678
gr/ACF	0.00041	0.00095	-	0.00068
lb/hr	0.04	0.08	-	0.06
lb/ton	0.00022	0.00050	-	0.00034

TABLE 9

FACILITY A4

Summary of Visible Emissions[1]

Date: 6/6/74

Type of Plant: Crushed Stone - Secondary Crushing and Screening

Type of Discharge: Stack

Distance from Observer to Discharge Point: 100

Location of Discharge: Baghouse

Height of Observation Point: Ground-level

Height of Point of Discharge: 15 ft.

Direction of Observer from Discharge Point: Nor

Description of Background: Sky

Description of Sky: Clear

Wind Direction: Variable

Wind Velocity: 0 to 10 mi/hr.

Color of Plume: None

Detached Plume: No

Duration of Observation: 240 minutes

SUMMARY OF AVERAGE OPACITY[1]

Set Number	Time		Opacity	
	Start	End	Sum	Average
1 through 30	10:40	1:40	0	0
31 through 40	1:45	2:45	0	0

Readings were 0 percent opacity during all periods of observation.

[1]Two observers made simultaneous readings.

TABLE 10

FACILITY A 4

SUMMARY OF VISIBLE EMISSIONS[1]

Date: 7/9/75 - 7/10/75

Type of Plant: Crushed stone (cement rock)

Type of Discharge: Fugitive

Location of Discharge: Conveyor (transfer point)

Height of Point of Discharge: 8 feet

Distance from Observer to Discharge Point: 50 feet

Description of Background: Sky

Height of Observation Point: 6 feet

Description of Sky: Partly cloudy

Direction of Observer from Discharge Point: SE

Wind Direction: South

Wind Velocity: 3 - 5 mph

Color of Plume: White

Detached Plume: No

Duration of Observation: 7/9/75 - 106 minutes
7/10/75 - 60 minutes

Summary of Data:

Opacity, Percent	Total Time Equal to or Greater Than Given Opacity		Opacity, Percent	Total Time Equal to or Greater Than Given Opacity	
	Min.	Sec.		Min.	Sec.
5	3	0	55	-	-
10	0	45	60	-	-
15	0	30	65	-	-
20	0	0	70	-	-
25	-	-	75	-	-
30	-	-	80	-	-
35	-	-	85	-	-
40	-	-	90	-	-
45	-	-	95	-	-
50	-	-	100	-	-

Sketch Showing How Opacity Varied With Time:

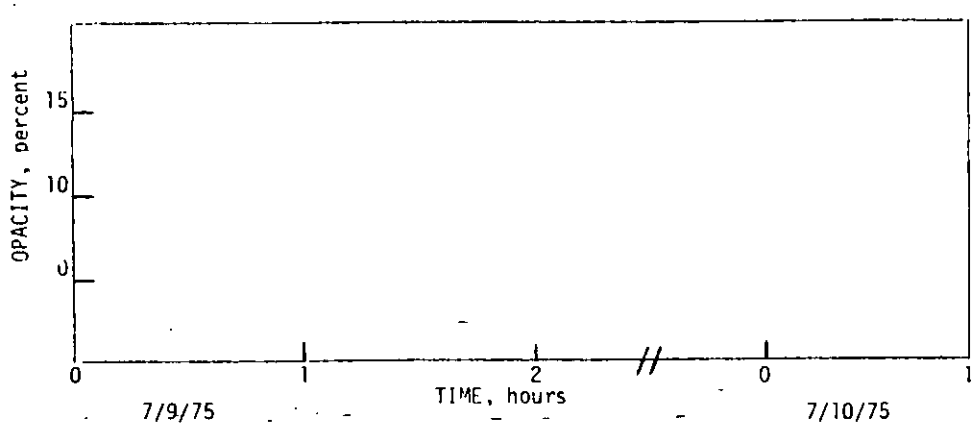

(1) Two observers made simultaneous readings, the greater of their readings is reported.

TABLE 11
FACILITY B1
Summary of Results

Run Number	1	2	3	Average
Date	10/29/74	10/30/74	10/30/74	-
Test Time - Minutes	180	120	120	140
Production Rate - TPH(1)	324	359	375	353
Stack Effluent				
Flow rate - ACFM	5154	6121	6078	5784
Flow rate - DSCFM	4998	5896	5753	5549
Temperature - °F	70	76	83	76.3
Water vapor - Vol. %	1.80	1.87	2.06	1.91
Visible Emissions at Collector Discharge - % Opacity	See Table 12			
Particulate Emissions				
Probe and filter catch				
gr/DSCF	0.009	0.001	0.010	0.007
gr/ACF	0.012	0.004	0.011	0.009
lb/hr	0.402	0.072	0.500	0.325
lb/ton	0.0012	0.0002	0.0013	0.0007
Total catch				
gr/DSCF	0.009	0.001	0.010	0.007
gr/ACF	0.011	0.003	0.011	0.008
lb/hr	0.496	0.180	0.553	0.408
lb/ton	0.0015	0.0005	0.0015	0.0012

(1) Throughput through primary crusher.

TABLE 12

FACILITY B1

Summary of Visible Emissions[1]

(Observer 1)

Date: 10/29/74 - 10/30/74

Type of Plant: Crushed Stone - Primary Crusher

Type of Discharge: Stack

Distance from Ovserver to Discharge Point: 15 ft.

Location of Discharge: Baghouse

Height of Observation Point: Ground level

Height of Point of Discharge: 25 ft.

Direction of Observer from Discharge Point: West

Description of Background: Grey quarry wall

Description of Sky: Clear to cloudy

Wind Direction: Northwesterly

Wind Velocity: Not available

Color of Plume: White

Detached Plume: No

Duration of Observation: 10/29/74 - 180 minutes
10/30/74 - 234 minutes

SUMMARY OF AVERAGE OPACITY

	Time		Opacity	
Set Number	Start	End	Sum	Average
10/29/74				
1	10:30	10:36	10	0.4
2	10:36	10:42	20	0.8
3	10:42	10:48	25	1.0
4	10:48	10:54	15	0.6
5	10:54	11:00	15	0.6
6	11:00	11:06	5	0.2
7	11:06	11:12	10	0.4
8	11:12	11:18	25	1.0
9	11:18	11:24	20	0.8
10	11:24	11:30	15	0.6
11	11:30	11:36	25	1.0
12	11:36	11:42	30	1.2
13	11:42	11:48	15	0.6
14	1:15	1:21	0	0
15	1:21	1:27	15	0.6
16	1:27	1:33	5	0.2
17	1:33	1:39	5	0.2
18	1:39	1:45	0	0
19	1:45	1:51	0	0
20	1:51	1:57	0	0
21	1:57	2:03	5	0.2
22	2:03	2:09	5	0.2
23	2:09	2:15	0	0
24	2:15	2:21	0	0
25	2:21	2:27	0	0
26	2:27	2:33	5	0.2
27	2:33	2:39	5	0.2
28	2:39	2:45	0	0
29	2:45	2:51	0	0
30	2:51	2:57	10	0.4
10/30/74				
31	9:05	9:11	0	0
32	9:11	9:17	0	0
33	9:17	9:23	0	0

SUMMARY OF AVERAGE OPACITY

	Time		Opacity	
Set Number	Start	End	Sum	Average
34	9:23	9:29	0	0
35	9:29	9:35	5	0.2
36	9:35	9:41	10	0.4
37	9:41	9:47	0	0
38	9:47	9:53	0	0
39	9:53	9:59	5	0.2
40	9:59	10:05	0	0
41	10:05	10:11	0	0
42	10:11	10:17	0	0
43	10:17	10:23	0	0
44	10:28	10:34	0	0
45	10:34	10:40	10	0.4
46	10:40	10:46	5	0.2
47	10:58	11:04	0	0
48	11:04	11:10	5	0.2
49	11:10	11:16	10	0.4
50	11:24	11:30	0	0
51	11:30	11:36	0	0
52	1:02	1:08	0	0
53	1:08	1:14	0	0
54	1:14	1:20	0	0
55	1:20	1:26	10	0.4
56	1:26	1:32	0	0
57	1:32	1:38	5	0.2
58	1:38	1:44	0	0
59	1:44	1:50	0	0
60	1:50	1:56	0	0
61	1:56	2:02	5	0.2
62	2:02	2:08	0	0
63	2:08	2:14	5	0.2
64	2:14	2:20	5	0.2
65	2:20	2:26	0	0
66	2:26	2:32	0	0
67	2:39	2:45	0	0
68	2:45	2:51	5	0.2
69	2:51	2:57	0	0

TABLE 13
FACILITY B2
Summary of Results

Run Number	1	2	3	Average
Date	10/31/74	10/31/74	11/11/74	-
Test Time - Minutes	108	108	108	108
Production Rate - TPH	270	270	270	270
Stack Effluent				
Flow rate - ACFM	19684	18921	16487	18197
Flow rate - DSCFM	18296	17638	15681	17205
Temperature - °F	92.0	96.0	79.0	87.0
Water vapor - Vol. %	1.95	1.92	2.01	1.96
Visible Emissions at Collector Discharge - % Opacity	SEE TABLES 14 - 23			
Particulate Emissions				
Probe and filter catch				
gr/DSCF	0.003	0.005	0.003	0.0037
gr/ACF	0.003	0.005	0.003	0.0037
lb/hr	0.427	0.753	0.457	0.546
lb/ton	0.0016	0.0028	0.0017	0.0020
Total catch				
gr/DSCF	0.006	0.006	0.007	0.0063
gr/ACF	0.005	0.006	0.007	0.0060
lb/hr	0.916	0.978	0.955	0.946
lb/ton	0.0034	0.0036	0.0035	0.0035

TABLE 14

FACILITY B2

Summary of Visible Emissions

(Observer 1)

Date: 10/31/74 - 11/1/74

Type of Plant: Crushed Stone - Secondary and Tertiary Crushing and Screening

Type of Discharge: Stack

Distance from Observer to Discharge Point: 30 ft.

Location of Discharge: Baghouse

Height of Observation Point: 5 ft.

Height of Point of Discharge: 8 ft.

Direction of Observer from Discharge Point: East

Description of Background: Sky

Description of Sky: Clear to partly cloudy

Wind Direction: Southeasterly

Wind Velocity: Not available

Color of Plume: White

Detached Plume: No

Duration of Observation: 10/31/74 - 240 minutes

11/1/74 - 106 minutes

SUMMARY OF AVERAGE OPACITY

Date	Set Number	Time Start	Time End	Opacity Sum	Opacity Average
10/31/74	1	9:27	9:33	5	0.2
	2	9:33	9:39	10	0.4
	3	9:39	9:45	5	0.2
	4	9:45	9:51	0	0
	5	9:51	9:57	5	0.2
	6	9:57	10:03	5	0.2
	7	10:03	10:09	10	0.4
	8	10:09	10:15	5	0.2
	9	10:15	10:21	20	0.8
	10	10:21	10:27	0	0
	11	10:27	10:33	0	0
	12	10:33	10:39	0	0
	13	10:39	10:45	5	0.2
	14	10:45	10:51	5	0.2
	15	10:51	10:57	10	0.4
	16	10:57	11:03	0	0
	17	11:03	11:09	5	0.2
	18	11:09	11:15	0	0
	19	11:15	11:21	0	0
	20	11:21	11:27	10	0.4
	21 through 40	1:09	3:09	0	0
11/1/74	41 through 56	8:11	9:47	0	0

Readings ranged from 0 to 5 percent opacity.

Table 15

FACILITY B2

SUMMARY OF VISIBLE EMISSIONS

Date: 6/30/75

Type of Plant: Crushed stone (limestone)

Type of Discharge: Fugitive

Location of Discharge: Secondary Cone Crusher (#1)

Height of Point of Discharge: 25 ft.

Distance from Observer to Discharge Point: 45 ft.

Description of Background: Sky & Equipment

Height of Observation Point: 2 ft.

Description of Sky: Clear

Direction of Observer from Discharge Point: North

Wind Direction: East

Wind Velocity: 5-10 mph

Color of Plume: White

Detached Plume: No

Duration of Observation: 231 minutes

Summary of Data:

Opacity, Percent	Total Time Equal to or Greater Than Given Opacity		Opacity, Percent	Total Time Equal to or Greater Than Given Opacity	
	Min.	Sec.		Min.	Sec.
5	23	0	55		
10	0	45	60		
15			65		
20			70		
25			75		
30			80		
35			85		
40			90		
45			95		
50			100		

Table 16

FACILITY B2

SUMMARY OF VISIBLE EMISSIONS

Date: 6/30/75

Type of Plant: Crushed stone (limestone)

Type of Discharge: Fugitive

Location of Discharge: Secondary Cone Crusher (#2)

Height of Point of Discharge: 25 ft.

Distance from Observer to Discharge Point: 45 ft.

Description of Background: Sky & Equipment

Height of Observation Point: 2 ft.

Description of Sky: Clear

Direction of Observer from Discharge Point: North

Wind Direction: East

Wind Velocity: 5-10 mph

Color of Plume: White

Detached Plume: No

Duration of Observation: 231 minutes

Summary of Data:

Opacity, Percent	Total Time Equal to or Greater Than Given Opacity		Opacity, Percent	Total Time Equal to or Greater Than Given Opacity	
	Min.	Sec.		Min.	Sec.
5	0	15	55		
10	0	0	60		
15	-	-	65		
20			70		
25			75		
30			80		
35			85		
40			90		
45			95		
50			100		

Table 17

FACILITY B2

SUMMARY OF VISIBLE EMISSIONS

Date: 6/30/75

Type of Plant: Crushed stone (limestone)

Type of Discharge: Fugitive

Location of Discharge: Secondary Cone Crusher (#3)

Height of Point of Discharge: 25 ft.

Distance from Observer to Discharge Point: 45 ft.

Description of Background: Sky & Equipment

Height of Observation Point: 2 ft.

Description of Sky: Clear

Direction of Observer from Discharge Point: North

Wind Direction: East

Wind Velocity: 5-10 mph

Color of Plume: White

Detached Plume: No

Duration of Observation: 231 minutes

Summary of Data:

Opacity, Percent	Total Time Equal to or Greater Than Given Opacity		Opacity, Percent	Total Time Equal to or Greater Than Given Opacity	
	Min.	Sec.		Min.	Sec.
5	0	0	55		
10	-	-	60		
15			65		
20			70		
25			75		
30			80		
35			85		
40			90		
45			95		
50			100		

Table 18

FACILITY B2

SUMMARY OF VISIBLE EMISSIONS

Date: 6/30/75 - 7/1/75

Type of Plant: Crushed stone (limestone)

Type of Discharge: Fugitive

Location of Discharge: Surge Bin

Height of Point of Discharge:

Distance from Observer to Discharge Point: 150 ft.

Description of Background: Sky & Equipment

Height of Observation Point: 15 ft.

Description of Sky: Clear

Direction of Observer from Discharge Point: SE

Wind Direction: South

Wind Velocity: 5 mph

Color of Plume: White

Detached Plume: No

Duration of Observation: 6/30/74 - 234 minutes
7/1/75 - 53 minutes

Summary of Data:

Opacity, Percent	Total Time Equal to or Greater Than Given Opacity		Opacity, Percent	Total Time Equal to or Greater Than Given Opacity	
	Min.	Sec.		Min.	Sec.
5	2	0	55		
10	1	15	60		
15	-	30	65		
20	-	-	70		
25			75		
30			80		
35			85		
40			90		
45			95		
50			100		

Table 19

FACILITY B2

SUMMARY OF VISIBLE EMISSIONS

Date: 6/30/75 - 7/1/75

Type of Plant: Crushed stone (limestone)

Type of Discharge: Fugitive

Location of Discharge: Scalping screen

Height of Point of Discharge: 50 ft.

Distance from Observer to Discharge Point: 150 ft.

Description of Background: Sky & Equipment

Height of Observation Point: 15 ft.

Description of Sky: Clear

Direction of Observer from Discharge Point: SE

Wind Direction: South

Wind Velocity: 5 MPH

Color of Plume: White

Detached Plume: no

Duration of Observation: 6/30/75 - 234 minutes
7/1/75 - 53 minutes

Summary of Data:

Opacity, Percent	Total Time Equal to or Greater Than Given Opacity		Opacity, Percent	Total Time Equal to or Greater Than Given Opacity	
	Min.	Sec.		Min.	Sec.
5	44	45	55		
10	9	45	60		
15	3	0	65		
20	0	30	70		
25	-	-	75		
30			80		
35			85		
40			90		
45			95		
50			100		

Table 20

FACILITY B2

SUMMARY OF VISIBLE EMISSIONS

ate: 6/30/75 - 7/1/75

ype of Plant: Crushed stone (limestone)

ype of Discharge: Fugitive

ocation of Discharge: Hammermill

eight of Point of Discharge:

Distance from Observer to Discharge Point: 150 ft.

escription of Background: Sky & Equipment

Height of Observation Point: 15 ft.

escription of Sky: Clear

Direction of Observer from Discharge Point: SE

ind Direction: South

Wind Velocity: 5 mph

olor of Plume: White

Detached Plume: No

uration of Observation: 6/30/75 - 234 minutes
7/1/75 - 53 minutes

ummary of Data:

Opacity, Percent	Total Time Equal to or Greater Than Given Opacity Min.	Sec.	Opacity, Percent	Total Time Equal to or Greater Than Given Opacity Min.	Sec.
5	0	0	55		
10	-	-	60		
15			65		
20			70		
25			75		
30			80		
35			85		
40			90		
45			95		
50			100		

Table 21

FACILITY B2

SUMMARY OF VISIBLE EMISSIONS

Date: 7/1/75

Type of Plant: Crushed stone (limestone)

Type of Discharge: Fugitive

Location of Discharge: (3-Deck) Finishing Screen (left)

Height of Point of Discharge: 40 '

Distance from Observer to Discharge Point: 75 ft

Description of Background: Hazy Sky

Height of Observation Point: Ground level

Description of Sky: Clear

Direction of Observer from Discharge Point: West

Wind Direction: Southeast

Wind Velocity: 5-15 mph

Color of Plume: White

Detached Plume: No

Duration of Observation: 107 minutes

Summary of Data:

Opacity, Percent	Total Time Equal to or Greater Than Given Opacity		Opacity, Percent	Total Time Equal to or Greater Than Given Opacit	
	Min.	Sec.		Min.	Sec.
5	4	30	55		
10	-	-	60		
15			65		
20			70		
25			75		
30			80		
35			85		
40			90		
45			95		
50			100		

Table 22

FACILITY B2

SUMMARY OF VISIBLE EMISSIONS

Date: 7/1/75

Type of Plant: Crushed stone (limestone)

Type of Discharge: Fugitive

Location of Discharge: (3-Deck) Finishing screen (right)

Height of Point of Discharge: 40 ft.

Distance from Observer to Discharge Point: 75 ft.

Description of Background: Hazy sky

Height of Observation Point: Ground level

Description of Sky: Clear

Direction of Observer from Discharge Point: West

Wind Direction: Southeast

Wind Velocity: 5-15 mph

Color of Plume: White

Detached Plume: No

Duration of Observation: 107 minutes

Summary of Data:

Opacity, Percent	Total Time Equal to or Greater Than Given Opacity Min.	Sec.	Opacity, Percent	Total Time Equal to or Greater Than Given Opacity Min.	Sec.
5	0	15	55		
10	-	-	60		
15			65		
20			70		
25			75		
30			80		
35			85		
40			90		
45			95		
50			100		

Table 23

FACILITY B2

SUMMARY OF VISIBLE EMISSIONS

Date: 6/30/75

Type of Plant: Crushed stone (limestone)

Type of Discharge: Fugitive

Location of Discharge: Two (3-Deck) finishing screens

Height of Point of Discharge: 50 ft.

Distance from Observer to Discharge Point: 75

Description of Background: Hazy sky

Height of Observation Point: Ground level

Description of Sky: Clear

Direction of Observer from Discharge Point: Wes

Wind Direction: Southeast

Wind Velocity: 10-15 mph

Color of Plume: White

Detached Plume: No

Duration of Observation: 120 minutes

Summary of Data:

Opacity, Percent	Total Time Equal to or Greater Than Given Opacity		Opacity, Percent	Total Time Equal to or Greater Than Given Opaci	
	Min.	Sec.		Min.	Sec.
5	86	15	55		
10	28	15	60		
15	5	30	65		
20	0	15	70		
25	0	0	75		
30	-	-	80		
35			85		
40			90		
45			95		
50			100		

TABLE 24

FACILITY B3

Summary of Results

Run Number	1	2	3	Average
Date	10/31/74	11/1/74	11/1/74	-
Test Time - Minutes				
Production Rate - TPH	270	270	270	270
Stack Effluent				
Flow rate - ACFM	18674	18405	16238	17772
Flow rate - DSCFM	17335	17186	15466	16662
Temperature - °F	92	90	79	87
Water Vapor - Vol. %	2.13	1.73	1.87	1.91
Visible Emissions at Collector Discharge - % Opacity				
Particulate Emissions				
Probe and filter catch				
gr/DSCF	0.002	0.004	0.003	0.003
gr/ACF	0.002	0.004	0.003	0.003
lb/hr	0.355	0.614	0.411	0.460
lb/ton	0.0013	0.0023	0.0015	0.0017
Total catch[1]				
gr/DSCF				
gr/ACF				
lb/hr				
lb/ton				

[1] No analysis of bark-half on in-stack filter tests.

TABLE 25

FACILITY C1

Summary of Results

Run Number	1	2	3	Average
Date	11/19/74	11/21/74	11/22/74	-
Test Time - Minutes	120	240	240	200
Production Rate - TPH(1)				
Stack Effluent				
Flow rate - ACFM	7340	7560	7520	7473
Flow rate - DSCFM	7260	7720	7800	7593
Temperature - °F	66.0	38.0	44.0	49.3
Water vapor - Vol. %	1.0	0.4	0.1	0.5
Visible Emissions at Collector Discharge - % Opacity	See table 26			
Particulate Emissions				
Probe and filter catch				
gr/DSCF	0.003	0.0007	0.003	0.0022
gr/ACF	0.003	0.0007	0.003	0.0022
lb/hr	0.18	0.05	0.17	0.10
lb/ton	0.001	0.0004	0.001	0.0008
Total catch				
gr/DSCF	0.007	0.001	0.003	0.0037
gr/ACF	0.007	0.001	0.003	0.0037
lb/hr	0.43	0.09	0.21	0.24
lb/ton	0.003	0.0008	0.002	0.0019

(1) Throughput through primary crusher.

TABLE 26

FACILITY C1

Summary of Visible Emissions[1]

Date: 11/21/74

Type of Plant: Crushed Stone - Primary and Secondary Crushing and Screening

Type of Discharge: Stack

Distance from Observer to Discharge Point: 100 ft.

Location of Discharge: Baghouse

Height of Observation Point: 50 ft.

Height of Point of Discharge: 40 ft.

Direction of Observer from Discharge Point: N.W.

Description of Background: Dark Woods

Description of Sky: Overcast

Wind Direction: Easterly

Wind Velocity: 10 to 30 mi/hr.

Color of Plume: White

Detached Plume: No

Duration of Observation: 240 minutes

SUMMARY OF AVERAGE OPACITY[2]

	Time		Opacity	
Set Number	Start	End	Sum	Average
1 through 40	12:10	4:10	0	0

Readings were 0 percent opacity during the observation period.

Sketch Showing How Opacity Varied With Time:

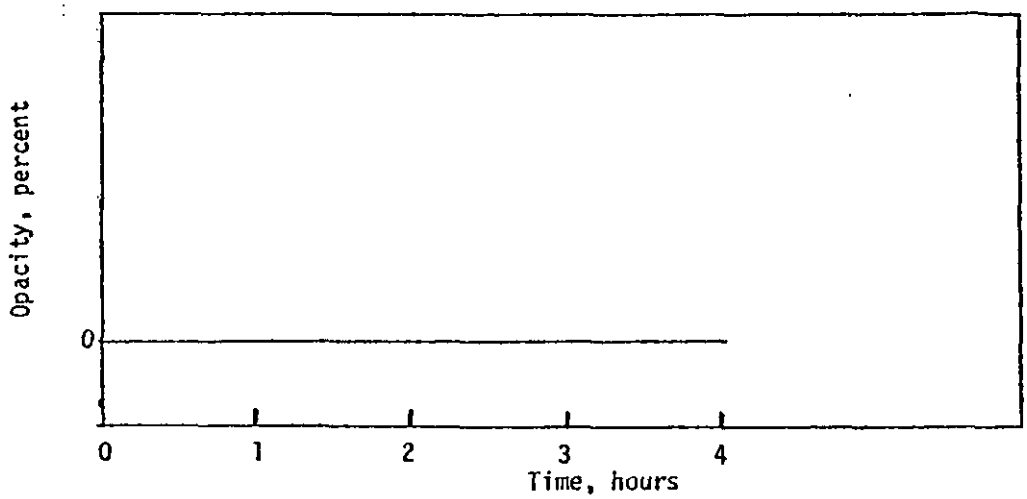

(1) Two observers made simultaneous readings.

Reference 5.

TABLE 27

FACILITY C2

Summary of Results

Run Number	1	2	3	Average
Date	11/19/74	11/21/74	11/22/74	-
Test Time - Minutes	120	240	240	200
Production Rate - TPH(1)	132	119	127	126
Stack Effluent				
Flow rate - ACFM	6220	6870	6540	6543
Flow rate - DSCFM	6260	6880	6700	6613
Temperature - °F	62.0	50.0	51.0	54.3
Water vapor - Vol. %	0.4	0.3	0.1	0.27
Visible Emissions at Collector Discharge - % Opacity	See Table 28			
Particulate Emissions				
Probe and filter catch				
gr/DSCF	0.006	0.00003	0.0004	0.00214
gr/ACF	0.006	0.00003	0.004	0.00214
lb/hr	0.31	0.002	0.02	0.111
lb/ton	0.002	0.00002	0.0002	0.00074
Total catch				
gr/DSCF	0.008	0.0006	0.0009	0.0032
gr/ACF	0.009	0.0007	0.001	0.0057
lb/hr	0.46	0.04	0.05	0.18
lb/ton	0.003	0.0003	0.0004	0.0012

(1) Throughput through primary crusher.

TABLE 28

FACILITY C2

Summary of Visible Emissions

ate: 11/21/74

ype of Plant: Crushed Stone - Finishing Screens

ype of Discharge: Stack

Distance from Observer to Discharge Point: 200 ft.

ocation of Discharge: Baghouse

Height of Observation Point: 50 ft.

eight of Point of Discharge: 40 ft.

Direction of Observer from Discharge Point: N.W.

escription of Background: Dark woods

escription of Sky: Overcast

ind Direction: Easterly

Wind Velocity: 10 to 30 mi/hr.

olor of Plume: White

Detached Plume: ———

uration of Observation: 240 minutes

SUMMARY OF AVERAGE OPACITY

Set Number	Time		Opacity	
	Start	End	Sum	Average
1 through 40	12:10	4:10	0	0

Readings were 0 percent opacity during the observation period.

ketch Showing How Opacity Varied With Time:

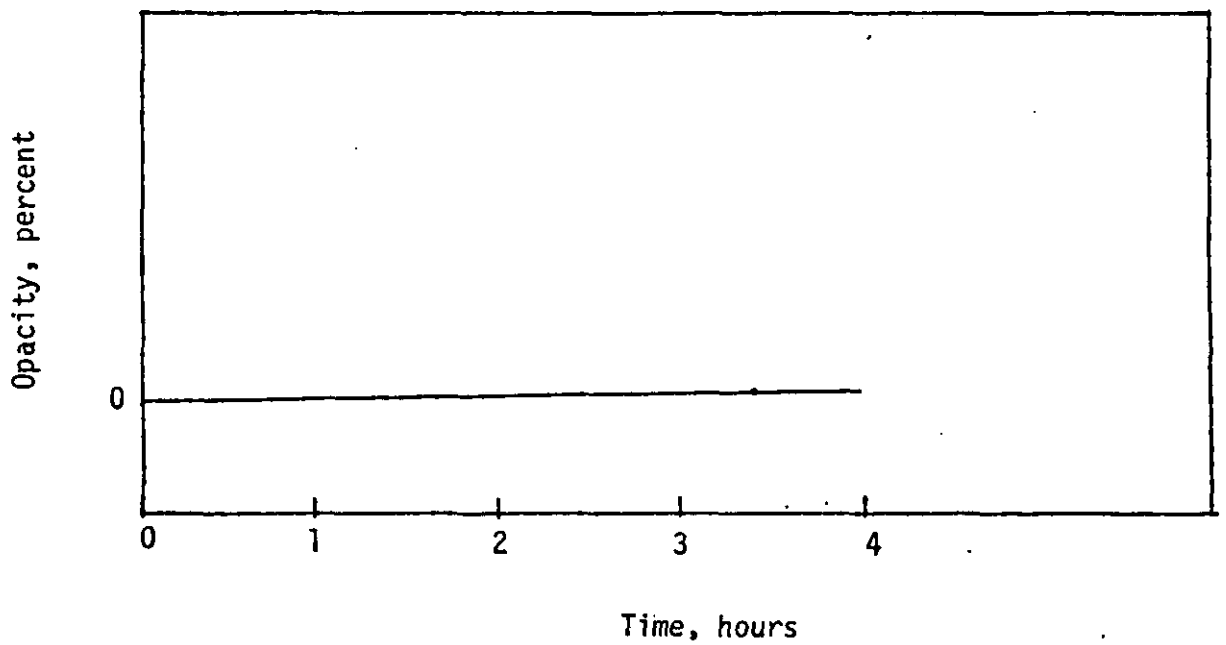

TABLE 29
FACILITY D1
Summary of Results

Run Number	1	2	3	Average
Date	9/17/74	9/18/74	9/19/74	-
Test Time - Minutes	240	240	240	240
Production Rate - TPH(1)	225	230	220	225
Stack Effluent				
Flow rate - ACFM	31830	31810	31950	31863
Flow rate - DSCFM	31370	30650	31230	31083
Temperature - °F	66.0	71.0	68.0	68.3
Water vapor - Vol. %	1.2	1.7	1.6	1.5
Visible Emissions at Collector Discharge - % Opacity		SEE TABLES 30-36		
Particulate Emissions				
Probe and filter catch				
gr/DSCF	0.0095	0.0081	0.0080	0.0085
gr/ACF	0.0094	0.0078	0.0078	0.0083
lb/hr	2.55	2.13	2.13	2.27
lb/ton	0.0113	0.0093	0.0097	0.0101
Total catch				
gr/DSCF	0.0100	0.0085	0.0086	0.0090
gr/ACF	0.0096	0.0082	0.0084	0.0088
lb/hr	2.69	2.23	2.30	2.41
lb/ton	0.0120	0.0097	0.0105	0.107

(1) Throughput through primary crusher.

TABLE 30

FACILITY D1

Summary of Visible Emissions

Date: 9/17/74

Type of Plant: Crushed Stone - Secondary and Tertiary Crushing & Screening

Type of Discharge: Stack

Distance from Observer to Discharge Point: 300 ft.

Location of Discharge: Baghouse

Height of Observation Point: 40 ft.

Height of Point of Discharge: 55 ft.

Direction of Observer from Discharge Point: S.E.

Description of Background: Trees

Description of Sky: Partly Cloudy

Wind Direction: Northerly

Wind Velocity: 5 - 10 mi/hr.

Color of Plume: None

Detached Plume: No

Duration of Observation: 240 minutes

SUMMARY OF AVERAGE OPACITY

Set Number	Time Start	Time End	Opacity Sum	Opacity Average
1 through 40	9:10	1:00	0	0

Readings were 0 percent opacity during the period of observation.

Sketch Showing How Opacity Varied With Time:

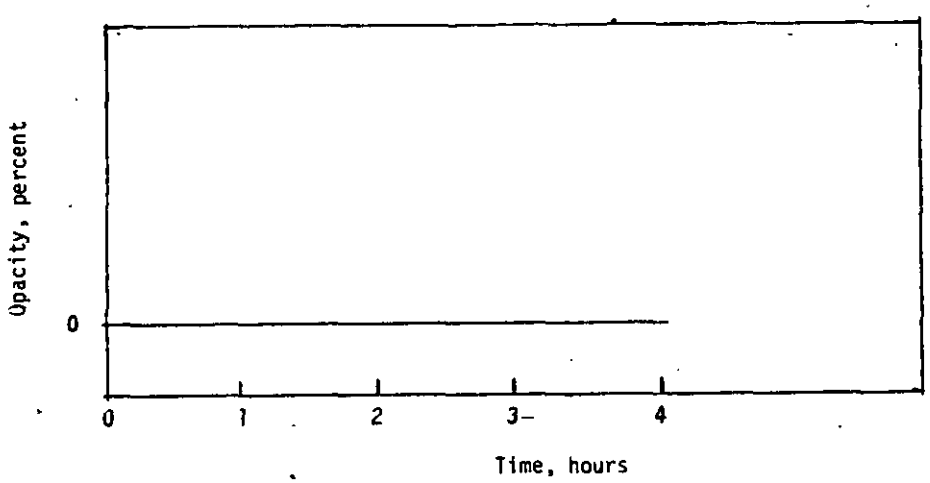

Table 31

FACILITY D1

SUMMARY OF VISIBLE EMISSIONS

Date: 7/8/75

Type of Plant: Crushed stone (traprock)

Type of Discharge: Fugitive

Location of Discharge: Tertiary gyrasphere cone crusher (S)

Height of Point of Discharge:

Distance from Observer to Discharge Point: 30 ft

Description of Background: Machinery

Height of Observation Point: ground level

Description of Sky: Overcast

Direction of Observer from Discharge Point: West

Wind Direction: Southwest

Wind Velocity: 0-10 mph

Color of Plume: White

Detached Plume: No

Duration of Observation: 170 minutes

Summary of Data:

Opacity, Percent	Total Time Equal to or Greater Than Given Opacity		Opacity, Percent	Total Time Equal to or Greater Than Given Opacity	
	Min.	Sec.		Min.	Sec.
5	0	0	55		
10	-	-	60		
15			65		
20			70		
25			75		
30			80		
35			85		
40			90		
45			95		
50			100		

Table 32

FACILITY D1

SUMMARY OF VISIBLE EMISSIONS

ate: 7/8/75

ype of Plant: Crushed stone (traprock)

ype of Discharge: Fugitive

ocation of Discharge: Tertiary gyrashere cone crusher (N)

eight of Point of Discharge:

Distance from Observer to Discharge Point: 30 ft.

escription of Background: Machinery

Height of Observation Point: ground level

escription of Sky: Overcast

Direction of Observer from Discharge Point: West

ind Direction: Southwest

Wind Velocity: 0-10 mph

olor of Plume: White

Detached Plume: No

uration of Observation: 170 minutes

ummary of Data:

Opacity, Percent	Total Time Equal to or Greater Than Given Opacity Min.	Sec.	Opacity, Percent	Total Time Equal to or Greater Than Given Opacity Min.	Sec.
5	0	0	55		
10	-	-	60		
15			65		
20			70		
25			75		
30			80		
35			85		
40			90		
45			95		
50			100		

Table 33

FACILITY D1

SUMMARY OF VISIBLE EMISSIONS

Date: 7/8/75

Type of Plant: Crushed stone (traprock)

Type of Discharge: Fugitive

Location of Discharge: Secondary standard cone crusher

Height of Point of Discharge:

Distance from Observer to Discharge Point: 30

Description of Background: Machinery

Height of Observation Point: Ground level

Description of Sky: Overcast

Direction of Observer from Discharge Point: Wes

Wind Direction: Southwest

Wind Velocity: 0-10 mph

Color of Plume: White

Detached Plume: No

Duration of Observation: 170 minutes

Summary of Data:

Opacity, Percent	Total Time Equal to or Greater Than Given Opacity		Opacity, Percent	Total Time Equal to or Greater Than Given Opaci	
	Min.	Sec.		Min.	Sec.
5	0	0	55		
10	-	-	60		
15			65		
20			70		
25			75		
30			80		
35			85		
40			90		
45			95		
50			100		

Table 34

FACILITY D1

SUMMARY OF VISIBLE EMISSIONS

Date: 7/9/75

Type of Plant: Crushed stone (traprock)

Type of Discharge: Fugitive

Location of Discharge: Scalping screen

Height of Point of Discharge:

Distance from Observer to Discharge Point: 30 ft.

Description of Background: Equipment

Height of Observation Point: 15 ft.

Description of Sky: Overcast

Direction of Observer from Discharge Point: North

Wind Direction: Southwest

Wind Velocity: 0-10 mph

Color of Plume: White

Detached Plume: No

Duration of Observation: 210 minutes

Summary of Data:

Opacity, Percent	Total Time Equal to or Greater Than Given Opacity		Opacity, Percent	Total Time Equal to or Greater Than Given Opacity	
	Min.	Sec.		Min.	Sec.
5	0	0	55		
10	-	-	60		
15			65		
20			70		
25			75		
30			80		
35			85		
40			90		
45			95		
50			100		

Table 35

FACILITY D1

SUMMARY OF VISIBLE EMISSIONS

Date: 7/9/75

Type of Plant: Crushed stone (traprock)

Type of Discharge: Fugitive

Location of Discharge: Secondary (2-Deck) sizing screens

Height of Point of Discharge:

Distance from Observer to Discharge Point: 30 ft.

Description of Background: Equipment

Height of Observation Point: 15 ft.

Description of Sky: Overcast

Direction of Observer from Discharge Point: North

Wind Direction: Southwest

Wind Velocity: 0-10 mph

Color of Plume: White

Detached Plume: No

Duration of Observation: 210 minutes

Summary of Data:

Opacity, Percent	Total Time Equal to or Greater Than Given Opacity		Opacity, Percent	Total Time Equal to or Greater Than Given Opacity	
	Min.	Sec.		Min.	Sec.
5	0	0	55		
10	-	-	60		
15			65		
20			70		
25			75		
30			80		
35			85		
40			90		
45			95		
50			100		

Table 36

FACILITY D1

SUMMARY OF VISIBLE EMISSIONS

Date: 7/9/75

Type of Plant: Crushed stone (traprock)

Type of Discharge: Fugitive

Location of Discharge: Secondary (3-Deck) sizing screens

Height of Point of Discharge:

Distance from Observer to Discharge Point: 30 ft

Description of Background: Equipment

Height of Observation Point: 15 ft.

Description of Sky: Overcast

Direction of Observer from Discharge Point: North

Wind Direction: Southwest

Wind Velocity: 0-10 mph

Color of Plume: White

Detached Plume: No

Duration of Observation: 210 minutes

Summary of Data:

Opacity, Percent	Total Time Equal to or Greater Than Given Opacity		Opacity, Percent	Total Time Equal to or Greater Than Given Opacity	
	Min.	Sec.		Min.	Sec.
5	0	0	55		
10	-	-	60		
15			65		
20			70		
25			75		
30			80		
35			85		
40			90		
45			95		
50			100		

TABLE 37
FACILITY D2
Summary of Results

Run Number	1	2	3	Average
Date	9/17/74	9/18/74	9/19/74	-
Test Time - Minutes	240	240	240	240
Production Rate - TPH(1)	225	230	220	225
Stack Effluent				
Flow rate - ACFM	26790	26260	24830	25960
Flow rate - DSCFM	26200	25230	24170	25200
Temperature - °F	69.0	74.0	72.0	71.7
Water vapor - Vol. %	1.3	1.6	1.3	1.4
Visible Emissions at Collector Discharge - % Opacity	See Table 38			
Particulate Emissions				
Probe and filter catch				
gr/DSCF	0.0027	0.0038	0.0023	0.0029
gr/ACF	0.0027	0.0036	0.0022	0.0028
lb/hr	0.61	0.82	0.47	0.63
lb/ton	0.0027	0.0036	0.0021	0.0028
Total catch				
gr/DSCF	0.0041	0.0045	0.0031	0.0039
gr/ACF	0.0040	0.0043	0.0030	0.0038
lb/hr	0.91	0.98	0.64	0.84
lb/ton	0.0040	0.0043	0.0029	0.0037

(1) Throughput through primary crusher.

TABLE 38

FACILITY D2

Summary of Visible Emissions

Date: 9/18/74

Type of Plant: Crushed Stone - Finishing Screens

Type of Discharge: Stack

Distance from Observer to Discharge Point: 300 ft.

Location of Discharge: Baghouse

Height of Observation Point: 40 ft.

Height of Point of Discharge: 55 ft.

Direction of Observer from Discharge Point: North

Description of Background: Trees

Description of Sky: Clear

Wind Direction: Northerly

Wind Velocity: 5 to 10 mi/hr.

Color of Plume: None

Detached Plume: No

Duration of Observation: 240 minutes

SUMMARY OF AVERAGE OPACITY

Set Number	Time Start	Time End	Opacity Sum	Opacity Average
1 through 40	8:30	12:30	0	0

Readings were 0 percent opacity during period of observation.

Sketch Showing How Opacity Varied with Time:

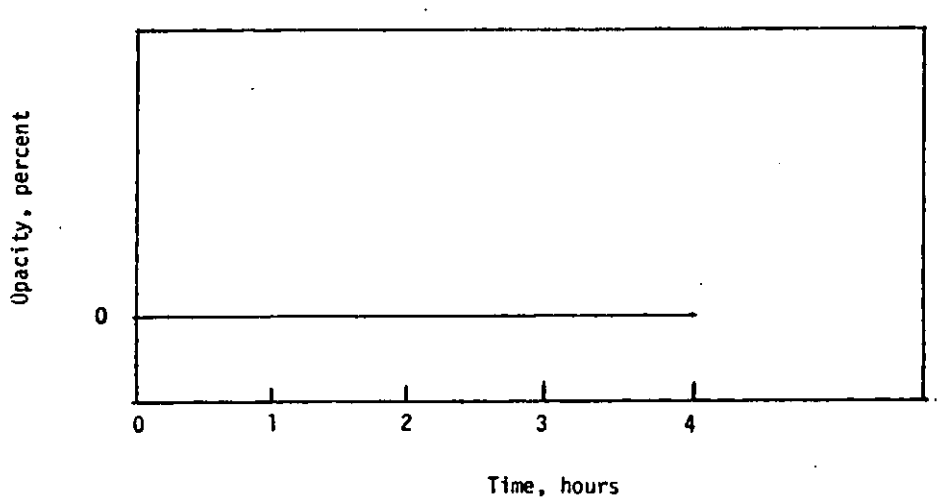

TABLE 39
FACILITY E1
Summary of Results

Run Number	1	2	3	Average
Date	11/18/74	11/18/74	11/19/74	-
Test Time - Minutes	120	120	120	120
Production Rate - TPH(1)	384	342	460	395
Stack Effluent				
Flow rate - ACFM	15272	13997	14975	14748
Flow rate - DSCFM	16297	14796	15642	15578
Temperature - °F	33.1	40.4	41.0	38.2
Water vapor - Vol. %	0.5	0.0	0.5	0.3
Visible Emissions at Collector Discharge - % Opacity	SEE TABLE 40			
Particulate Emissions				
Probe and filter catch				
gr/DSCF	0.0134	0.0116	0.0147	0.0132
gr/ACF	0.0143	0.0122	0.0154	0.0140
lb/hr	1.87	1.47	1.97	1.77
lb/ton	0.0049	0.0043	0.0043	0.0045
Total catch				
gr/DSCF	0.0170	0.0137	0.0164	0.0157
gr/ACF	0.0181	0.0145	0.0171	0.0166
lb/hr	2.37	1.74	2.20	2.10
lb/ton	0.0067	0.0051	0.0048	0.0055

(1) Throughput through primary crusher.

TABLE 40

FACILITY E1

Summary of Visible Emissions

ate: 11/18/74 - 11/19/74

ype of Plant: Crushed Stone - Tertiary Crushing and Screening

ype of Discharge: Stack

Distance from Observer to Discharge Point: 60 ft.

ocation of Discharge: Baghouse

Height of Observation Point: Ground level

eight of Point of Discharge: 1/2 ft.

Direction of Observer from Discharge Point: South

escription of Background: Grey Wall

escription of Sky: Overcast

ind Direction: Westerly

Wind Velocity: 2 - 10 mi/hr.

olor of Plume: None

Detached Plume: No

uration of Observation: 11/18/74 - 120 minutes
11/19/74 - 60 minutes

SUMMARY OF AVERAGE OPACITY

Set Number	Time Start	Time End	Opacity Sum	Opacity Average
11/18/74				
1 through 10	9:00	10:00	0	0
11 through 20	10:15	11:15	0	0
11/19/74				
21 through 30	10:07	11:07	0	0

Readings were 0 percent opacity during all periods of observation.

TABLE 41

FACILITY E2

Summary of Results

Run Number	1	2	3	Average
Date	11/18/74	11/18/74	11/19/74	-
Test Time - Minutes	120	120	120	120
Production Rate - TPH(1)	384	342	460	395
Stack Effluent				
Flow rate - ACFM	22169	19772	21426	21122
Flow rate - DSCFM	23001	19930	21779	21570
Temperature - °F	44.5	59.2	55.0	52.9
Water vapor - Vol. %	1.1	1.1	0.6	0.9
Visible Emissions at Collector Discharge - % Opacity	SEE TABLE 42			
Particulate Emissions				
Probe and filter catch				
gr/DSCF	0.0132	0.0096	0.0153	0.0127
gr/ACF	0.0137	0.0097	0.0155	0.0130
lb/hr	2.60	1.65	2.85	2.37
lb/ton	0.0068	0.0048	0.0062	0.0059
Total catch				
gr/DSCF	0.0205	0.1378	0.0170	0.0171
gr/ACF	0.0213	0.0139	0.0173	0.0175
lb/hr	4.05	2.35	3.18	3.19
lb/ton	0.0105	0.0069	0.0069	0.0081

(1) Throughput through primary crusher.

TABLE 42

FACILITY E2

Summary of Visible Emissions

Date: 11/18/74 - 11/19/74

Type of Plant: Crushed Stone - Finishing Screens and Bins

Type of Discharge: Stack

Distance from Observer to Discharge Point: 120 ft

Location of Discharge: Baghouse

Height of Observation Point: Ground level

Height of Point of Discharge: 1/2 ft.

Direction of Observer from Discharge Point: South

Description of Background: Hillside

Description of Sky: Clear

Wind Direction: Westerly

Wind Velocity: 2 - 10 mi/hr.

Color of Plume: None

Detached Plume: No

Duration of Observation: 11/18/74 - 120 minutes
11/19/74 - 60 minutes

SUMMARY OF AVERAGE OPACITY(2)

Set Number	Time Start	Time End	Opacity Sum	Opacity Average
11/18/74				
1 through 10	12:50	1:50	0	0
11 through 20	1:50	2:00	0	0
11/19/74				
21 through 30	9:05	10:05	0	0

Readings were 0 percent opacity during all periods of observation.

Table 43

FACILITY F

SUMMARY OF VISIBLE EMISSIONS

Date: 8/26/76

Type of Plant: Crushed stone (traprock)

Type of Discharge: Fugitive

Location of Discharge: Two tertiary crushers (#4 and #5)

Height of Point of Discharge: #4-20 ft. #5-10 ft.

Distance from Observer to Discharge Point: 100 ft.

Description of Background: Gray equipment Structures

Height of Observation Point: ground level

Description of Sky: Partly cloudy

Direction of Observer from Discharge Point: West

Wind Direction: Variable

Wind Velocity: 0-5 mph

Color of Plume: No visible plume

Detached Plume:

Duration of Observation: 65 minutes

Summary of Data:

Opacity, Percent	Total Time Equal to or Greater Than Given Opacity Min.	Sec.	Opacity, Percent	Total Time Equal to or Greater Than Given Opacity Min.	Sec.
5	0	0	55		
10	-	-	60		
15			65		
20			70		
25			75		
30			80		
35			85		
40			90		
45			95		
50			100		

Table 44

FACILITY F

SUMMARY OF VISIBLE EMISSIONS

Date: 8/26/76

Type of Plant: Crushed stone (traprock)

Type of Discharge: Fugitive

Location of Discharge: Four processing screens

Height of Point of Discharge: 50 ft.

Distance from Observer to Discharge Point: 100 ft.

Description of Background: gray walls

Height of Observation Point: ground level

Description of Sky: Partly cloudy

Direction of Observer from Discharge Point: NE

Wind Direction: Variable

Wind Velocity: 0-5 mph

Color of Plume: No visible plume

Detached Plume:

Duration of Observation: 180 minutes

Summary of Data:

Opacity, Percent	Total Time Equal to or Greater Than Given Opacity Min.	Sec.	Opacity, Percent	Total Time Equal to or Greater Than Given Opacity Min.	Sec.
5	0	0	55		
10	-	-	60		
15			65		
20			70		
25			75		
30			80		
35			85		
40			90		
45			95		
50			100		

Table 45

FACILITY F

SUMMARY OF VISIBLE EMISSIONS

Date: 8/27/76

Type of Plant: Crushed stone (traprock)

Type of Discharge: Fugitive

Location of Discharge: Conveyor transfer points

Height of Point of Discharge: 75 ft.

Distance from Observer to Discharge Point: 150 ft.

Description of Background: Gray equipment structures

Height of Observation Point: 50 ft.

Description of Sky: Overcast

Direction of Observer from Discharge Point: SE

Wind Direction: Variable, S-SE

Wind Velocity: 0-10 mph

Color of Plume: No visible plume

Detached Plume:

Duration of Observation: 179 minutes

Summary of Data:

Opacity, Percent	Total Time Equal to or Greater Than Given Opacity Min.	Sec.	Opacity, Percent	Total Time Equal to or Greater Than Given Opacity Min.	Sec.
5	0	0	55		
10	-	-	60		
15			65		
20			70		
25			75		
30			80		
35			85		
40			90		
45			95		
50			100		

Table 46

FACILITY G1

SUMMARY OF VISIBLE EMISSIONS

te: 9/27/76

pe of Plant: Feldspar

pe of Discharge: Fugitive

cation of Discharge: Primary Crusher

ight of Point of Discharge: 10-30 ft.

Distance from Observer to Discharge Point: 100 ft

escription of Background: Quarry wall & equipment structures

Height of Observation Point: Ground level

escription of Sky: Partly cloudy

Direction of Observer from Discharge Point: S

ind Direction: Northeast

Wind Velocity: 0-10 mph

olor of Plume:

Detached Plume: No

uration of Observation: 60 minutes

ummary of Data:

Opacity, Percent	Total Time Equal to or Greater Than Given Opacity Min.	Sec.
5	0	45
10	-	-
15		
20		
25		
30		
35		
40		
45		
50		

Opacity, Percent	Total Time Equal to or Greater Than Given Opacity Min.	Sec.
55		
60		
65		
70		
75		
80		
85		
90		
95		
100		

Table 47

FACILITY G1

SUMMARY OF VISIBLE EMISSIONS

Date: 9/27/76

Type of Plant: Feldspar

Type of Discharge: Fugitive

Location of Discharge: Conveyor transfer point (#1)

Height of Point of Discharge: 10 ft.

Distance From Observer to Discharge Point: 50 ft.

Description of Background: Quarry wall

Height of Observation Point: ground level

Description of Sky: Overcast

Direction of Observer from Discharge Point: SE

Wind Direction: Northeast

Wind Velocity: 0-5 mph

Color of Plume: No plume

Detached Plume: No

Duration of Observation: 80 minutes

Summary of Data:

Opacity, Percent	Total Time Equal to or Greater Than Given Opacity Min.	Sec.	Opacity, Percent	Total Time Equal to or Greater Than Given Opacity Min.	Sec.
5	0	0	55		
10	-	-	60		
15			65		
20			70		
25			75		
30			80		
35			85		
40			90		
45			95		
50			100		

Table 48

FACILITY G1

SUMMARY OF VISIBLE EMISSIONS

Date: 9/27/76

Type of Plant: Feldspar

Type of Discharge: Fugitive

Location of Discharge: Conveyor transfer point (#2)

Height of Point of Discharge: 40 ft.

Distance from Observer to Discharge Point: 50 ft.

Description of Background: Quarry wall

Height of Observation Point: ground level

Description of Sky: Partly cloudy-Overcast

Direction of Observer from Discharge Point: SE

Wind Direction: North-northwest

Wind Velocity: 0-10 mph

Color of Plume: No plume

Detached Plume: N/A

Duration of Observation: 87 minutes

Summary of Data:

Opacity, Percent	Total Time Equal to or Greater Than Given Opacity		Opacity, Percent	Total Time Equal to or Greater Than Given Opacity	
	Min.	Sec.		Min.	Sec.
5	0	0	55		
10	-	-	60		
15			65		
20			70		
25			75		
30			80		
35			85		
40			90		
45			95		
50			100		

Table 49

FACILITY G1

SUMMARY OF VISIBLE EMISSIONS

Date: 9/27/76

Type of Plant: Feldspar

Type of Discharge: Fugitive

Location of Discharge: Secondary crusher

Height of Point of Discharge: 10-20 ft.

Distance from Observer to Discharge Point: 75

Description of Background: Equipment structure

Height of Observation Point: 75 ft

Description of Sky: Partly cloudy -cloudy

Direction of Observer from Discharge Point: SSE

Wind Direction: Northwest

Wind Velocity: 0-7 mph

Color of Plume: No visible plume

Detached Plume: N/A

Duration of Observation: 1 hour

Summary of Data:

Opacity, Percent	Total Time Equal to or Greater Than Given Opacity		Opacity, Percent	Total Time Equal to or Greater Than Given Opaci	
	Min.	Sec.		Min.	Sec.
5	0	0	55		
10	-	-	60		
15			65		
20			70		
25			75		
30			80		
35			85		
40			90		
45			95		
50			100		

Table 50

FACILITY G1

SUMMARY OF VISIBLE EMISSIONS

Date: 9/27/76

Type of Plant: Feldspar

Type of Discharge: Fugitive

Location of Discharge: Conveyor transfer Point (#4)

Height of Point of Discharge: 10 ft.

Distance from Observer to Discharge Point: 84 ft.

Description of Background: cliff or wall

Height of Observation Point: 75 ft.

Description of Sky: cloudy

Direction of Observer from Discharge Point: SE

Wind Direction: North

Wind Velocity: 0-7 mph

Color of Plume: No visible plume

Detached Plume: N/A

Duration of Observation: 84 minutes

Summary of Data:

Opacity, Percent	Total Time Equal to or Greater Than Given Opacity		Opacity, Percent	Total Time Equal to or Greater Than Given Opacity	
	Min.	Sec.		Min.	Sec.
5	0	0	55		
10	-	-	60		
15			65		
20			70		
25			75		
30			80		
35			85		
40			90		
45			95		
50			100		

Table 51
FACILITY G2

Summary of Results

Run Number	1	2	3	Average
Date	9/28/76	9/28/76	9/29/76	
Test Time-minutes	120	120	120	120
Production rate - TPH				
Stack Effluent				
Flow rate - ACFM	5070	4830	4470	4790
Flow rate - DSCFM	4210	3940	3720	3960
Temperature - °F	105	115	103	108
Water vapor - Vol.%				
Visible Emissions at Collector Discharge - Percent Opacity	See Tables 53 - 62			
Particulate Emissions				
Probe and Filter Catch				
gr/DSCF	0.005	0.005	0.004	0.005
gr/ACF	0.004	0.004	0.004	0.004
lb/hr	0.17	0.18	0.14	0.16
lb/ton				
Total Catch				
gr/DSCF	0.005	0.005	0.004	0.005
gr/ACF	0.004	0.004	0.004	0.004
lb/hr	0.17	0.18	0.14	0.16
lb/ton				

Table 52
FACILITY G2
(Inlet)
Summary of Results

Run Number	North Inlet	South Inlet	Total
Date	9/28/76	9/28/76	
Test Time-minutes			
Production rate - TPH			
Stack Effluent			
Flow rate - ACFM	1,520	2,070	3,590
Flow rate - DSCFM	1,260	1,720	2,980
Temperature - °F	103	103	103
Water vapor - Vol.%			
Visible Emissions at Collector Discharge - Percent Opacity			
Particulate Emissions			
Probe and Filter Catch			
gr/DSCF	12.9	0.99	6.02
gr/ACF	10.7	0.82	5.00
lb/hr	140	14.6	154.6
lb/ton			
Total Catch			
gr/DSCF	12.9	0.99	6.02
gr/ACF	10.7	0.82	5.00
lb/hr	140	14.6	154.6
lb/ton	---	---	

TABLE 53

FACILITY G2

Summary of Visible Emissions

Date: 9/28/76

Type of Plant: Feldspar

Type of Discharge: Outlet Stack

Distance from Observer to Discharge Point: Approx. 40'

Location of Discharge: No.2 Mill Baghouse

Height of Observation Point: Approx. 100'

Height of Point of Discharge: 100'

Direction of Observer from Discharge Point: I

Description of Background: trees on hillside

Description of Sky: Overcast

Wind Direction: NW

Wind Velocity: 0-10 mi/hr

Color of Plume: No visible plume

Detached Plume: N/A

Duration of Observation: 2-1/4 hours

SUMMARY OF AVERAGE OPACITY					SUMMARY OF AVERAGE OPACITY				
	Time		Opacity			Time		Opacity	
Set Number	Start	End	Sum	Average	Set Number	Start	End	Sum	Average
1	09:48	09:54	N	N	21	11:48	11:54	N	N
2	09:54	10:00	N	N	22	11:54	12:00	N	N
3	10:00	10:06	N	N	23	12:00	12:06	N	N
4	10:06	10:12	N	N	24				
5	10:12	10:18	N	N	25				
6	10:18	10:24	N	N	26				
7	10:24	10:30	N	N	27				
8	10:30	10:36	N	N	28				
9	10:36	10:42	N	N	29				
10	10:42	10:48	N	N	30				
11	10:48	10:54	N	N	31				
12	10:54	11:00	N	N	32				
13	11:00	11:06	N	N	33				
14	11:06	11:12	N	N	34				
15	11:12	11:18	N	N	35				
16	11:18	11:24	N	N	36				
17	11:24	11:30	N	N	37				
18	11:30	11:36	N	N	38				
19	11:36	11:42	N	N	39				
20	11:42	11:48	N	N	40				

TABLE 54

FACILITY G2

Summary of Visible Emissions

Date: 9/29/76

Type of Plant: Feldspar

Type of Discharge: Outlet Stack

Location of Discharge: No.2 Mill Baghouse

Height of Point of Discharge: 100'

Distance from Observer to Discharge Point: approx. 50'

Height of Observation Point: same level as discharge

Direction of Observer from Discharge Point:

Description of Background: hillside with trees

Description of Sky: Cloudy

Wind Direction: NE

Wind Velocity: 0-5 mi/hr

Color of Plume: No visible plume

Detached Plume: N/A

Duration of Observation: 2 hrs.

SUMMARY OF AVERAGE OPACITY					SUMMARY OF AVERAGE OPACITY				
	Time		Opacity			Time		Opacity	
Set Number	Start	End	Sum	Average	Set Number	Start	End	Sum	Average
1	08:35	08:40	N	N	21	10:35	10:37	N	N
2	08:41	08:46	N	N	22				
3	08:47	08:52	N	N	23				
4	08:53	08:58	N	N	24				
5	08:59	09:04	N	N	25				
6	09:05	09:10	N	N	26				
7	09:11	09:16	N	N	27				
8	09:17	09:22	N	N	28				
9	09:23	09:28	N	N	29				
10	09:29	09:34	N	N	30				
11	09:35	09:40	N	N	31				
12	09:41	09:46	N	N	32				
13	09:47	09:52	N	N	33				
14	09:53	09:58	N	N	34				
15	09:59	10:04	N	N	35				
16	10:05	10:10	N	N	36				
17	10:11	10:16	N	N	37				
18	10:17	10:22	N	N	38				
19	10:23	10:28	N	N	39				
20	10:29	10:34	N	N	40				

TABLE 55

FACILITY G2

Summary of Visible Emissions

Date: 9/28/76

Type of Plant: Feldspar

Type of Discharge: Outlet Stack

Location of Discharge: No.2 Mill Baghouse

Height of Point of Discharge: 100'

Distance from Observer to Discharge Point: Approx. 40' SE

Height of Observation Point: Approx. 100'

Direction of Observer from Discharge Point: SE

Description of Background: grassy hillside

Description of Sky: partly cloudy

Wind Direction: NW

Wind Velocity: 0-15 mi/hr

Color of Plume: No visible plume

Detached Plume: N/A

Duration of Observation: approx. 2-1/4 hrs.

SUMMARY OF AVERAGE OPACITY

	Time		Opacity		SUMMARY OF AVERAGE OPACITY	Time		Opacity	
Set Number	Start	End	Sum	Average	Set Number	Start	End	Sum	Average
1	14:48	14:54	N	N	21	16:48	16:54	N	N
2	14:54	15:00	N	N	22	16:54	17:00	N	N
3	15:00	15:06	N	N	23				
4	15:06	15:12	N	N	24				
5	15:12	15:18	N	N	25				
6	15:18	15:24	N	N	26				
7	15:24	15:30	N	N	27				
8	15:30	15:36	N	N	28				
9	15:36	15:42	N	N	29				
10	15:42	15:48	N	N	30				
11	15:48	15:54	N	N	31				
12	15:54	16:00	N	N	32				
13	16:00	16:06	N	N	33				
14	16:06	16:12	N	N	34				
15	16:12	16:18	N	N	35				
16	16:18	16:24	N	N	36				
17	16:24	16:30	N	N	37				
18	16:30	16:36	N	N	38				
19	16:36	16:42	N	N	39				
20	16:42	L6:43	N	N	40				

Table 56

FACILITY G2

SUMMARY OF VISIBLE EMISSIONS

Date: 9/28/76

Type of Plant: Feldspar

Type of Discharge: Fugitive

Location of Discharge: Ball mill (feed end)

Height of Point of Discharge: 20 ft.

Distance from Observer to Discharge Point: 35 ft.

Description of Background: Building & Equipment

Height of Observation Point:

Description of Sky: N/A

Direction of Observer from Discharge Point: N/A

Wind Direction: N/A

Wind Velocity: N/A

Color of Plume: No visible plume

Detached Plume: N/A

Duration of Observation: 1 hour

Summary of Data:

Opacity, Percent	Total Time Equal to or Greater Than Given Opacity		Opacity, Percent	Total Time Equal to or Greater Than Given Opacity	
	Min.	Sec.		Min.	Sec.
5	0	0	55		
10	-	-	60		
15			65		
20			70		
25			75		
30			80		
35			85		
40			90		
45			95		
50			100		

Table 57

FACILITY G2

SUMMARY OF VISIBLE EMISSIONS

Date: 9/28/76

Type of Plant: Feldspar

Type of Discharge: Fugitive

Location of Discharge: Ball mill (discharge end)

Height of Point of Discharge: 20 ft.

Distance from Observer to Discharge Point: 35

Description of Background: Building and equipment

Height of Observation Point:

Description of Sky: N/A

Direction of Observer from Discharge Point: N/A

Wind Direction: N/A

Wind Velocity: N/A

Color of Plume: No visible plume

Detached Plume: N/A

Duration of Observation: 1 hour

Summary of Data:

Opacity, Percent	Total Time Equal to or Greater Than Given Opacity		Opacity, Percent	Total Time Equal to or Greater Than Given Opaci	
	Min.	Sec.		Min.	Sec.
5	0	0	55		
10	-	-	60		
15			65		
20			70		
25			75		
30			80		
35			85		
40			90		
45			95		
50			100		

Table 58

FACILITY G2

SUMMARY OF VISIBLE EMISSIONS

Date: 9/28/76

Type of Plant: Feldspar

Type of Discharge: Fugitive

Location of Discharge: Indoor transfer point (#1)

Height of Point of Discharge:

Distance from Observer to Discharge Point:

Description of Background: Building wall

Height of Observation Point:

Description of Sky: N/A

Direction of Observer from Discharge Point: N/A

Wind Direction: N/A

Wind Velocity: N/A

Color of Plume: No visible plume

Detached Plume: N/A

Duration of Observation: 1 hour

Summary of Data:

Opacity, Percent	Total Time Equal to or Greater Than Given Opacity		Opacity, Percent	Total Time Equal to or Greater Than Given Opacity	
	Min.	Sec.		Min.	Sec.
5	0	0	55		
10	-	-	60		
15			65		
20			70		
25			75		
30			80		
35			85		
40			90		
45			95		
50			100		

Table 59

FACILITY G2

SUMMARY OF VISIBLE EMISSIONS

Date: 9/28/76

Type of Plant: Feldspar

Type of Discharge: Fugitive

Location of Discharge: Indoor transfer point (#2)

Height of Point of Discharge:

Distance from Observer to Discharge Point:

Description of Background: Building wall

Height of Observation Point:

Description of Sky: N/A

Direction of Observer from Discharge Point: N/A

Wind Direction: N/A

Wind Velocity: N/A

Color of Plume: No visible plume

Detached Plume: N/A

Duration of Observation: 1 hour

Summary of Data:

Opacity, Percent	Total Time Equal to or Greater Than Given Opacity		Opacity, Percent	Total Time Equal to or Greater Than Given Opacity	
	Min.	Sec.		Min.	Sec.
5	0	0	55		
10	-	-	60		
15			65		
20			70		
25			75		
30			80		
35			85		
40			90		
45			95		
50			100		

Table 60

FACILITY G2

SUMMARY OF VISIBLE EMISSIONS

Date: 9/28/76

Type of Plant: Feldspar

Type of Discharge: Fugitive

Location of Discharge: Indoor Bucket Elevator

Height of Point of Discharge:

Distance from Observer to Discharge Point:

Description of Background: Building walls

Height of Observation Point:

Description of Sky: N/A

Direction of Observer from Discharge Point: N/A

Wind Direction: N/A

Wind Velocity: N/A

Color of Plume: No visible plume

Detached Plume: N/A

Duration of Observation: 1 hour

Summary of Data:

Opacity, Percent	Total Time Equal to or Greater Than Given Opacity		Opacity, Percent	Total Time Equal to or Greater Than Given Opacity	
	Min.	Sec.		Min.	Sec.
5	0	0	55		
10	-	-	60		
15			65		
20			70		
25			75		
30			80		
35			85		
40			90		
45			95		
50			100		

Table 61

FACILITY G2

SUMMARY OF VISIBLE EMISSIONS

Date: 9/28/76

Type of Plant: Feldspar

Type of Discharge: Fugitive

Location of Discharge: Truck loading

Height of Point of Discharge: 15 ft.

Distance from Observer to Discharge Point: 30 ft

Description of Background: Building wall

Height of Observation Point: ground level

Description of Sky: N/A

Direction of Observer from Discharge Point: E

Wind Direction: N/A

Wind Velocity: N/A

Color of Plume: N/A

Detached Plume: N/A

Duration of Observation: 13 minutes

Summary of Data:

Opacity, Percent	Total Time Equal to or Greater Than Given Opacity		Opacity, Percent	Total Time Equal to or Greater Than Given Opaci	
	Min.	Sec.		Min.	Sec.
5	0	0	55		
10	-	-	60		
15			65		
20			70		
25			75		
30			80		
35			85		
40			90		
45			95		
50			100		

Table 62

FACILITY G2

SUMMARY OF VISIBLE EMISSIONS

Date: 9/28/76

Type of Plant: Feldspar

Type of Discharge: Fugitive

Location of Discharge: Railroad car loading

Height of Point of Discharge: 15 ft.

Distance from Observer to Discharge Point: 25 ft.

Description of Background: Building wall

Height of Observation Point: ground level

Description of Sky: Cloudy

Direction of Observer from Discharge Point: E

Wind Direction: N/A

Wind Velocity: N/A

Color of Plume: N/A

Detached Plume: N/A

Duration of Observation: 32 minutes

Summary of Data:

Opacity, Percent	Total Time Equal to or Greater Than Given Opacity		Opacity, Percent	Total Time Equal to or Greater Than Given Opacity	
	Min.	Sec.		Min.	Sec.
5	5	15	55		
10	0	0	60		
15	-	-	65		
20			70		
25			75		
30			80		
35			85		
40			90		
45			95		
50			100		

Table 63

FACILITY H1

SUMMARY OF VISIBLE EMISSIONS

Date: 10/27 - 28/76

Type of Plant: Gypsum

Type of Discharge: Fugitive (leaks)

Location of Discharge: Hammermill

Height of Point of Discharge: Leaks

Description of Background: Inside plant

Description of Sky: N/A

Wind Direction: N/A

Color of Plume: White

Duration of Observation: 298 minutes

Distance from Observer to Discharge Point: 25 ft

Height of Observation Point: ground level

Direction of Observer from Discharge Point: SW

Wind Velocity: N/A

Detached Plume: N/A

Summary of Data:

Opacity, Percent	Total Time Equal to or Greater Than Given Opacity		Opacity, Percent	Total Time Equal to or Greater Than Given Opacity	
	Min.	Sec.		Min.	Sec.
5	1	45	55		
10	0	15	60		
15	0	0	65		
20	-	-	70		
25			75		
30			80		
35			85		
40			90		
45			95		
50			100		

Table 64
FACILITY H2

Summary of Results

Run Number	1	2	3	Average
Date	10/27/76	10/27/76	10/28/76	
Test Time-minutes	88	88	88	88
Production rate - TPH	-	-	-	-
Stack Effluent				
Flow rate - ACFM	4,548	4,364	4,306	4,406
Flow rate - DSCFM	3,542	3,486	3,423	3,484
Temperature - °F	145.4	147.0	145.3	145.9
Water vapor - Vol.%	4.6	1.8	2.6	3.0
Visible Emissions at Collector Discharge - Percent Opacity	See Table 66			
Particulate Emissions				
Probe and Filter Catch				
gr/DSCF	0.071	0.063	0.066	0.067
gr/ACF	0.055	0.050	0.053	0.053
lb/hr	2.16	1.87	1.94	1.99
lb/ton	-	-	-	-
Total Catch				
gr/DSCF	0.073	0.064	0.068	0.068
gr/ACF	0.057	0.051	0.054	0.054
lb/hr	2.53	2.40	2.65	2.53
lb/ton	-	-	-	-

Table 65
FACILITY H2
(Inlet)
Summary of Results

Run Number	1	2	3	Average
Date	10/28/76			
Test Time-minutes				
Production rate - TPH				
Stack Effluent				
Flow rate - ACFM	2,729			
Flow rate - DSCFM	2,148			
Temperature - °F	167.5			
Water vapor - Vol.%				
Visible Emissions at Collector Discharge - Percent Opacity				
Particulate Emissions				
Probe and Filter Catch				
gr/DSCF	3.42			
gr/ACF	2.69			
lb/hr	63.0			
lb/ton				
Total Catch				
gr/DSCF	3.42			
gr/ACF	2.69			
lb/hr	63.0			
lb/ton				

TABLE 66

FACILITY H2

Summary of Visible Emissions

Date: 10/27/76

Type of Plant: Gypsum board manufacturer

Type of Discharge: Stack

Distance from Observer to Discharge Point: 25 ft.

Location of Discharge: Above plant roof

Height of Observation Point: roof level

Height of Point of Discharge: 6' above roof

Direction of Observer from Discharge Point: 225° (S.W.)

Description of Background: Sky

Description of Sky: Clear

Wind Direction: 0° (N)

Wind Velocity: ~ 10 mph

Color of Plume: White

Detached Plume: No

Duration of Observation: 87 Min

SUMMARY OF AVERAGE OPACITY					SUMMARY OF AVERAGE OPACITY				
	Time		Opacity			Time		Opacity	
Set Number	Start	End	Sum	Average	Set Number	Start	End	Sum	Average
1	1312:00	1316:45	125	6.25	21				
2	1357:00	1402:45	155	6.46	22				
3	1403:00	1408:45	135	5.62	23				
4	1409:00	1414:45	150	6.25	24				
5	1415:00	1420:45	140	5.83	25				
6	1421:00	1426:45	125	5.21	26				
7	1427:00	1432:45	135	5.62	27				
8	1433:00	1438:45	130	5.42	28				
9	1439:00	1444:45	125	5.21	29				
10	1445:00	1450:45	115	4.79	30				
11	1451:00	1456:45	95	3.96	31				
12	1457:00	1502:45	70	2.92	32				
13	1503:00	1508:45	80	3.33	33				
14	1509:00	1514:45	85	3.54	34				
15	1515:00	1519:05	60	3.53	35				
16					36				
17					37				
18					38				
19					39				
20					40				

TABLE 66 (con't)

FACILITY H2

Summary of Visible Emissions

Date: 10/27/76

Type of Plant: Gypsum board manufacturer

Type of Discharge: Stack

Distance from Observer to Discharge Point: 25

Location of Discharge: Above plant roof

Height of Observation Point: roof level

Height of Point of Discharge: 6' above roof

Direction of Observer from Discharge Point: 225° (S.W.)

Description of Background: Sky

Description of Sky: Clear

Wind Direction: 45° (N.E.)

Wind Velocity: ~ 10-15 mph

Color of Plume: White

Detached Plume: No

Duration of Observation: 92 min.

SUMMARY OF AVERAGE OPACITY					SUMMARY OF AVERAGE OPACITY				
	Time		Opacity			Time		Opacity	
Set Number	Start	End	Sum	Average	Set Number	Start	End	Sum	Average
1	0830:00	0835:45	45	1.87	21				
2	0836:00	0841:45	65	2.71	22				
3	0842:00	0847:45	70	2.92	23				
4	0848:00	0849:00	5	1.00	24				
5	0957:00	1002:45	125	5.21	25				
6	1003:00	1008:45	60	2.50	26				
7	1009:00	1014:45	80	3.33	27				
8	1015:00	1020:45	85	3.54	28				
9	1021:00	1026:45	75	3.12	29				
10	1027:00	1032:45	70	2.92	30				
11	1033:00	1038:45	85	3.54	31				
12	1039:00	1044:45	95	3.96	32				
13	1045:00	1050:45	90	3.75	33				
14	1051:00	1056:45	90	3.75	34				
15	1057:00	1102:45	70	2.92	35				
16	1103:00	1108:45	55	2.29	36				
17	1109:00	1110:45	25	3.12	37				
18					38				
19					39				
20					40				

TABLE 66 (con't)

FACILITY H2

Summary of Visible Emissions

Date: 10/28/76

Type of Plant: Gypsum board manufacturer

Type of Discharge: Stack

Distance from Observer to Discharge Point: 25 ft.

Location of Discharge: Above plant roof

Height of Observation Point: roof level

Height of Point of Discharge: 6' above roof

Direction of Observer from Discharge Point: 225° (S.W.)

Description of Background: Sky

Description of Sky: Clear

Wind Direction: 180° (S)

Wind Velocity: ~ 10 mph

Color of Plume: White

Detached Plume: No

Duration of Observation: 87 min

SUMMARY OF AVERAGE OPACITY

	Time		Opacity	
Set Number	Start	End	Sum	Average
1	0830:00	0835:45	40	1.67
2	0930:00	0935:45	95	3.96
3	0936:00	0941:45	85	3.54
4	0942:00	0947:45	65	2.71
5	0948:00	0953:45	70	2.92
6	0945:00	0959:45	60	2.50
7	1000:00	1005:45	90	3.75
8	1006:00	1011:45	40	2.50
9	1012:00	1017:45	30	1.25
10	1018:00	1023:45	25	1.04
11	1024:00	1029:45	40	1.67
12	1030:00	1035:45	60	2.50
13	1036:00	1041:45	25	1.04
14	1042:00	1047:45	70	2.92
15	1048:00	1050:45	10	0.83
16				
17				
18				
19				
20				

SUMMARY OF AVERAGE OPACITY

	Time		Opacity	
Set Number	Start	End	Sum	Average
21				
22				
23				
24				
25				
26				
27				
28				
29				
30				
31				
32				
33				
34				
35				
36				
37				
38				
39				
40				

Table 67

FACILITY I

SUMMARY OF VISIBLE EMISSIONS

Date: 9/30/76

Type of Plant: Mica

Type of Discharge: Fugitive

Location of Discharge: Bagging Operation

Height of Point of Discharge: 3 ft.

Distance from Observer to Discharge Point: 7 ft.

Description of Background: Indoors

Height of Observation Point: ground level

Description of Sky: N/A

Direction of Observer from Discharge Point: N/A

Wind Direction: N/A

Wind Velocity: N/A

Color of Plume: N/A.

Detached Plume: N/A

Duration of Observation: 1 hour

Summary of Data:

Opacity, Percent	Total Time Equal to or Greater Than Given Opacity		Opacity, Percent	Total Time Equal to or Greater Than Given Opacity	
	Min.	Sec.		Min.	Sec.
5	0	0	55		
10	-	-	60		
15			65		
20			70		
25			75		
30			80		
35			85		
40			90		
45			95		
50			100		

Table 68

FACILITY J1

SUMMARY OF VISIBLE EMISSIONS

Date: 10/20 - 21/76

Type of Plant: Talc

Type of Discharge: Fugitive (leaks)

Location of Discharge: Vertical mill

Height of Point of Discharge: In room

Distance from Observer to Discharge Point: 10 ft.

Description of Background: ceiling

Height of Observation Point: Floor

Description of Sky: N/A

Direction of Observer from Discharge Point: W

Wind Direction: N/A

Wind Velocity: N/A

Color of Plume: White

Detached Plume: N/A

Duration of Observation: 90 minutes

Summary of Data:

Opacity, Percent	Total Time Equal to or Greater Than Given Opacity		Opacity, Percent	Total Time Equal to or Greater Than Given Opacity	
	Min.	Sec.		Min.	Sec.
5	0	0	55		
10	-	-	60		
15			65		
20			70		
25			75		
30			80		
35			85		
40			90		
45			95		
50			100		

Table 69

FACILITY J1

SUMMARY OF VISIBLE EMISSIONS

Date: 10/20/76

Type of Plant: Talc

Type of Discharge: Fugitive

Location of Discharge: Primary crusher

Height of Point of Discharge: In room

Distance from Observer to Discharge Point: 5 ft

Description of Background: wall

Height of Observation Point: Floor

Description of Sky: N/A

Direction of Observer from Discharge Point: W

Wind Direction: N/A

Wind Velocity: N/A

Color of Plume: White

Detached Plume: N/A

Duration of Observation: 90 minutes

Summary of Data:

Opacity, Percent	Total Time Equal to or Greater Than Given Opacity		Opacity, Percent	Total Time Equal to or Greater Than Given Opacity	
	Min.	Sec.		Min.	Sec.
5	20	15	55		
10	8	0	60		
15	1	15	65		
20	0	0	70		
25	--	--	75		
30			80		
35			85		
40			90		
45			95		
50			100		

Table 70

FACILITY J1

SUMMARY OF VISIBLE EMISSIONS

Date: 10/20 - 21/76

Type of Plant: Talc

Type of Discharge: Fugitive

Location of Discharge: Secondary crusher

Height of Point of Discharge: In room

Distance from Observer to Discharge Point: 5 ft.

Description of Background: wall

Height of Observation Point: floor

Description of Sky: N/A

Direction of Observer from Discharge Point: S

Wind Direction: N/A

Wind Velocity: N/A

Color of Plume: White

Detached Plume: N/A

Duration of Observation: 150 minutes

Summary of Data:

Opacity, Percent	Total Time Equal to or Greater Than Given Opacity		Opacity, Percent	Total Time Equal to or Greater Than Given Opacity	
	Min.	Sec.		Min.	Sec.
5	3	45	55		
10	0	15	60		
15	0	0	65		
20	-	-	70		
25			75		
30			80		
35			85		
40			90		
45			95		
50			100		

Table 71

FACILITY J1

SUMMARY OF VISIBLE EMISSIONS

Date: 10/19 - 21/76

Type of Plant: Talc

Type of Discharge: Fugitive

Location of Discharge: Bagger

Height of Point of Discharge: In room

Distance from Observer to Discharge Point: 10 f

Description of Background: wall

Height of Observation Point: floor

Description of Sky: N/A

Direction of Observer from Discharge Point: W

Wind Direction: N/A

Wind Velocity: N/A

Color of Plume: White

Detached Plume: N/A

Duration of Observation: 150 minutes

Summary of Data:

Opacity, Percent	Total Time Equal to or Greater Than Given Opacity		Opacity, Percent	Total Time Equal to or Greater Than Given Opacit	
	Min.	Sec.		Min.	Sec.
5	12	45	55	0	45
10	5	15	60	0	45
15	3	0	65	0	15
20	2	15	70	0	15
25	2	0	75	0	0
30	2	0	80	-	-
35	1	30	85		
40	1	30	90		
45	1	15	95		
50	1	15	100		

Table 72

FACILITY J1

SUMMARY OF VISIBLE EMISSIONS

Date: 10/19/76

Type of Plant: Talc

Type of Discharge: Fugitive

Location of Discharge: Pebble Mill No. 2

Height of Point of Discharge: In room

Distance from Observer to Discharge Point: 10 ft.

Description of Background: wall

Height of Observation Point: floor

Description of Sky: N/A

Direction of Observer from Discharge Point: W

Wind Direction: N/A

Wind Velocity: N/A

Color of Plume: White

Detached Plume: N/A

Duration of Observation: 90 minutes

Summary of Data:

Opacity, Percent	Total Time Equal to or Greater Than Given Opacity		Opacity, Percent	Total Time Equal to or Greater Than Given Opacity	
	Min.	Sec.		Min.	Sec.
5	5	0	55		
10	0	45	60		
15	0	0	65		
20	-	-	70		
25			75		
30			80		
35			85		
40			90		
45			95		
50			100		

Table 73
FACILITY J2

Summary of Results

Run Number	1	2	3	Average
Date	10/20/76	10/20/76	10/21/76	
Test Time-minutes	120	120	120	120
Production rate - TPH	-	-	-	-
Stack Effluent				
Flow rate - ACFM	21,100	21,300	21,300	21,200
Flow rate - DSCFM	20,200	20,200	19,500	20,000
Temperature - °F	80	83	82	82
Water vapor - Vol.%	0.3	0.3	1.0	0.5
Visible Emissions at Collector Discharge - Percent Opacity	See Table 75			
Particulate Emissions				
Probe and Filter Catch				
gr/DSCF	0.047	0.068	0.067	0.061
gr/ACF	0.045	0.065	0.061	0.057
lb/hr	8.17	11.8	11.2	10.4
lb/ton	-	-	-	-
Total Catch				
gr/DSCF	0.065	0.071	0.068	0.068
gr/ACF	0.062	0.067	0.062	0.064
lb/hr	11.2	12.2	11.3	11.6
lb/ton	-	-	-	-

Table 74
FACILITY J2
(Inlet)
Summary of Results

Inlet Number	1	2	3	1A	1B	Total
Date	10/20/76	10/20/76	10/20/76	10/21/76	10/21/76	
Test Time-minutes						
Production rate - TPH						
Stack Effluent						
Flow rate - ACFM	11,500	3,570	3,520	396	614	19,600
Flow rate - DSCFM	11,300	2,940	3,410	393	603	18,646
Temperature - °F	60	160	45	48	52	74
Water vapor - Vol.%						
Visible Emissions at Collector Discharge - Percent Opacity						
Particulate Emissions						
Probe and Filter Catch						
gr/DSCF	8.80	1.26	3.08	64.6	9.06	7.75
gr/ACF	8.64	1.04	2.99	63.7	8.76	7.36
lb/hr	852	31.7	90.1	218	46.8	1,239
lb/ton						
Total Catch						
gr/DSCF						
gr/ACF						
lb/hr						
lb/ton						

TABLE 75

FACILITY J2

Summary of Visible Emissions

Date: 10/21/76

Type of Plant: Talc

Type of Discharge: Stack

Distance from Observer to Discharge Point: approx. 100'

Location of Discharge: Baghouse Outlet

Height of Observation Point: approx. 36'

Height of Point of Discharge: 30'

Direction of Observer from Discharge Point: 160° SE

Description of Background: Hills and trees

Description of Sky: Overcast - rain

Wind Direction: 60° NE

Wind Velocity: 8-12 mi/hr - Gust up to 20

Color of Plume: White

Detached Plume: N/A

Duration of Observation: Approx. 2 hrs.

SUMMARY OF AVERAGE OPACITY

	Time		Opacity	
Set Number	Start	End	Sum	Average
1	08:00	08:06	10	0.4
2	08:06	08:12	0	0
3	08:12	08:18	0	0
4	08:18	08:24	5	0.2
5	08:24	08:30	0	0
6	08:30	08:36	5	0.2
7	08:36	08:42	5	0.2
8	08:42	08:48	0	0
9	08:48	08:54	0	0
10	08:54	09:00	0	0
11	09:00	09:06	5	0.2
12	09:06	09:12	10	0.4
13	09:12	09:18	15	0.6
14	09:18	09:24	5	0.2
15	09:24	09:30	5	0.2
16	09:30	09:36	5	0.2
17	09:36	09:42	5	0.2
18	09:42	09:48	0	0
19	09:48	09:54	5	0.2
20	09:54	10:00	5	0.2

SUMMARY OF AVERAGE OPACITY

	Time		Opacity	
Set Number	Start	End	Sum	Average
21	10:00	10:05	0	0
22				
23				
24				
25				
26				
27				
28				
29				
30				
31				
32				
33				
34				
35				
36				
37				
38				
39				
40				

TABLE 75 (con't)

FACILITY J2

Summary of Visible Emissions

Date: 10/20/76

Type of Plant: Talc

Type of Discharge: Stack

Distance from Observer to Discharge Point: 100'

Location of Discharge: Baghouse Outlet

Height of Observation Point: approx. 36'

Height of Point of Discharge: 30'

Direction of Observer from Discharge Point: 160° SE

Description of Background: Hills and trees

Description of Sky: Overcast - Rain

Wind Direction: 290° NW

Wind Velocity: 4-7 mi/hr

Color of Plume: White

Detached Plume: N/A

Duration of Observation: 2:05 min.

SUMMARY OF AVERAGE OPACITY

	Time		Opacity	
Set Number	Start	End	Sum	Average
1	12:54	13:00	0	0
2	13:00	13:06	0	0
3	13:06	13:12	0	0
4	13:12	13:18	5	0.2
5	13:18	13:24	5	0.2
6	13:24	13:30	10	0.4
7	13:30	13:36	5	0.2
8	13:36	13:42	5	0.2
9	13:42	13:48	15	0.6
10	13:48	13:54	15	0.6
11	13:54	14:00	5	0.2
12	14:00	14:06	0	0
13	14:06	14:12	5	0.2
14	14:12	14:18	0	0
15	14:18	14:24	5	0.2
16	14:24	14:30	0	0
17	14:30	14:36	5	0.2
18	14:36	14:42	5	0.2
19	14:42	14:48	0	0
20	14:48	14:54	0	0

SUMMARY OF AVERAGE OPACITY

	Time		Opacity	
Set Number	Start	End	Sum	Average
21	14:54	14:59	0	0
22				
23				
24				
25				
26				
27				
28				
29				
30				
31				
32				
33				
34				
35				
36				
37				
38				
39				
40				

TABLE 75 (con't)

FACILITY J2

Summary of Visible Emissions

Date: 10/20/76

Type of Plant: Talc

Type of Discharge: Stack

Distance from Observer to Discharge Point: approx. 100'

Location of Discharge: Baghouse Outlet

Height of Observation Point: approx. 36'

Height of Point of Discharge: 30'

Direction of Observer from Discharge Point: 160° SE

Description of Background: Hills and trees

Description of Sky: Overcast

Wind Direction: 290° NW

Wind Velocity: 4-7 mi/hr

Color of Plume: White

Detached Plume: N/A

Duration of Observation: 2:22 min.

SUMMARY OF AVERAGE OPACITY

	Time		Opacity	
Set Number	Start	End	Sum	Average
1	08:35	08:41	0	0
2	08:41	08:47	5	0.2
3	08:47	08:53	5	0.2
4	08:53	08:59	5	0.2
5	08:49	09:05	5	0.2
6	09:05	09:11	5	0.2
7	09:11	09:17	10	0.4
8	09:17	09:23	5	0.2
9	09:23	09:29	5	0.2
10	09:29	09:35	5	0.2
11	09:35	09:41	0	0
12	09:41	09:47	10	0.4
13	09:47	09:53	0	0
14	09:53	09:59	0	0
15	09:59	10:05	5	0.2
16	10:05	10:11	5	0.2
17	10:11	10:17	10	0.4
18	10:17	10:23	5	0.2
19	10:23	10:29	0	0
20	10:29	10:35	10	0.4

SUMMARY OF AVERAGE OPACITY

	Time		Opacity	
Set Number	Start	End	Sum	Average
21	10:35	10:41	5	0.2
22	10:41	10:47	5	0.2
23	10:47	10:53	10	0.4
24	10:53	10:58	5	0.25
25				
26				
27				
28				
29				
30				
31				
32				
33				
34				
35				
36				
37				
38				
39				
40				

Table 76
FACILITY K

Summary of Results

Run Number	1	2	3	Average
Date	6/21/77	6/21/77	6/22/77	
Test Time-minutes	120	120	120	120
Production rate - TPH	-	-	-	-
Stack Effluent				
Flow rate - ACFM	4,567	4,113	4,579	4,420
Flow rate - DSCFM	3,637	3,196	3,646	3,493
Temperature - °F	135.3	152.3	136.8	141.5
Water vapor - Vol.%	1.69	1.36	1.63	1.56
Visible Emissions at Collector Discharge - Percent Opacity	See Table 77			
Particulate Emissions				
Probe and Filter Catch				
gr/DSCF	0.024	0.027	0.041	0.031
gr/ACF	0.020	0.022	0.034	0.025
lb/hr	0.75	0.75	1.29	0.93
lb/ton	-	-	-	-
Total Catch				
gr/DSCF				
gr/ACF				
lb/hr				
lb/ton				

TABLE 77

FACILITY K

Summary of Visible Emissions

Date: 6/20 - 6/21/71

Type of Plant: Talc

Type of Discharge: Stack

Distance from Observer to Discharge Point: 125

Location of Discharge: Pebble mill

Height of Observation Point: 25 ft.

Height of Point of Discharge: 40 ft.

Direction of Observer from Discharge Point: W

Description of Background: Equipment and Mountain

Description of Sky: Clear

Wind Direction: North

Wind Velocity: 5 mph

Color of Plume: White

Detached Plume: N/A

Duration of Observation:

SUMMARY OF AVERAGE OPACITY

	Time		Opacity	
Set Number	Start	End	Sum	Average
1	1314	1320	80	3.33
2	1320	1326	10	0.42
3	1326	1332	5	0.21
4	1332	1338	10	0.42
5	1338	1344	10	0.42
6	1344	1350	0	0.0
7	1350	1356	5	0.21
8	1356	1402	0	0.0
9	1402	1408	5	0.21
10	1408	1414	5	0.21
11	1417	1423	5	0.21
12	1423	1429	5	0.21
13	1429	1435	5	0.21
14	1435	1441	10	0.42
15	1441	1447	5	0.21
16	1447	1453	0	0.0
17	1453	1459	0	0.0
18	1459	1505	5	0.21
19	1505	1511	0	0.0
20	1511	1517	10	0.42

SUMMARY OF AVERAGE OPACITY

	Time		Opacity	
Set Number	Start	End	Sum	Average
21	802	808	10	0.42
22	808	814	5	0.21
23	814	820	5	0.21
24	820	826	30	1.25
25	826	832	0	0.0
26	832	838	0	0.0
27	838	844	40	1.67
28	844	850	75	3.13
29	850	856	50	2.08
30	856	902	65	2.32
31	903	909	35	1.46
32	909	915	20	0.83
33	915	921	55	2.29
34	921	927	25	1.04
35	927	933	55	2.29
36	933	939	55	2.29
37	939	945	30	1.24
38	945	951	55	2.29
39	951	957	70	2.92
40	957	1003	40	1.67

TABLE 77 (con't)

FACILITY K

Summary of Visible Emissions

Date: 6/20 - 6/21/71

Type of Plant: Talc

Type of Discharge: Stack

Distance from Observer to Discharge Point: 125 ft.

Location of Discharge: Pebble Mill

Height of Observation Point: 25 ft.

Height of Point of Discharge: 40 ft.

Direction of Observer from Discharge Point: W

Description of Background: Equipment and Mountain

Description of Sky: Clear

Wind Direction: North

Wind Velocity: 5 mph

Color of Plume: White

Detached Plume: N/A

Duration of Observation:

SUMMARY OF AVERAGE OPACITY

	Time		Opacity			Time		Opacity	
Set Number	Start	End	Sum	Average	Set Number	Start	End	Sum	Average
1	1004	1009	30	1.25	21	1407	1413	125	5.21
2	1208	1214	105	4.38	22				
3	1216	1220	110	4.58	23				
4	1220	1226	85	3.54	24				
5	1226	1232	90	3.75	25				
6	1232	1238	125	5.21	26				
7	1238	1244	85	3.54	27				
8	1244	1250	105	4.38	28				
9	1250	1256	95	3.96	29				
10	1256	1302	25	1.32	30				
11	1302	1308	65	2.95	31				
12	1313	1319	95	3.96	32				
13	1319	1325	105	4.38	33				
14	1325	1331	40	1.67	34				
15	1331	1337	30	1.30	35				
16	1337	1343	60	2.61	36				
17	1343	1349	55	2.29	37				
18	1349	1355	35	1.94	38				
19	1355	1401	5	0.36	39				
20	1401	1407	75	3.13	40				

TABLE 78

FACILITY L1
(Inlet)
Summary of Results

Run Number	1*
Date	12/6/78
Test Time - Minutes	60
Production Rate - TPH	-
Stack Effluent	
Flow rate - ACFM	17180
Flow rate- DSCFM	14040
Temperature - ^{o}F	136
Water vapor - Vol. %	7.4
Visible Emissions at Collector Discharge - % Opacity	-
Particulate Emissions	
Probe and Filter catch	
gr/DSCF	4.53
gr/ACF	3.70
lb/hr	545
lb/ton	-
Total catch (1)	
gr/DSCF	
gr/ACF	
lb/hr	
lb/ton	

* Test conducted concurrently with Run 2, Table 79.

(1) No analysis of back-half on in-stack filter tests.

TABLE 79

FACILITY L1

Summary of Results

Run Number	1	2*	3	Average
Date	12/6/78	12/6/78	12/6/68	-
Test Time - Minutes	96	96	96	96
Production Rate - TPH	-	-	-	-
Stack Effluent				
Flow rate - ACFM	17690	17960	18060	17903
Flow rate- DSCFM	14790	14650	15080	14840
Temperature - ^{o}F	131.	141.	141.	138
Water vapor - Vol. %	7.0	7.8	5.4	6.7
Visible Emissions at Collector Discharge - % Opacity	see Table 80	-	-	-
Particulate Emissions				
Probe and Filter catch				
gr/DSCF	0.020	0.012	0.016	0.016
gr/ACF	0.017	0.010	0.013	0.013
lb/hr	2.49	1.54	2.01	2.01
lb/ton	-	-	-	-
Total catch(1)				
gr/DSCF				
gr/ACF				
lb/hr				
lb/ton				

*Test conducted concurrently with Run 1, Table 78.

(1) No analysis of back-half on in-stack filter tests.

TABLE 80

FACILITY L1

Summary of Visible Emissions

Date: 12/6/78

Type of Plant: Clay Processing

Type of Discharge: Stack

Distance from Observer to Discharge Point: 7 ft.

Location of Discharge: Baghouse

Height of Observation Point: 80 ft.

Height of Point of Discharge: 80 ft.

Direction of Observer from Discharge Point: Sout

Description of Background: Green Pine Forest

Description of Sky: Blue

Wind Direction: Northwest

Wind Velocity: 5 mi/hr.

Color of Plume: White

Detached Plume: No

Duration of Observation: 90 minutes

SUMMARY OF AVERAGE OPACITY

Set Number	Time Start	Time End	Opacity Sum	Opacity Average
1	1400	1406	0	0
2	1406	1412	0	0
3	1412	1418	0	0
4	1418	1424	0	0
5	1424	1430	0	0
6	1430	1436	0	0
7	1436	1442	0	0
8	1442	1448	0	0
9	1448	1454	0	0
10	1454	1500	0	0
11	1500	1506	0	0
12	1506	1512	0	0
13	1512	1518	0	0
14	1518	1524	0	0
15	1524	1530	0	0

TABLE 81

FACILITY L2
(Inlet)
Summary of Results

Run Number	1
Date	12/6/78
Test Time - Minutes	56
Production Rate - TPH	-
Stack Effluent	
Flow rate - ACFM	8550
Flow rate- DSCFM	6960
Temperature - ^{o}F	134
Water vapor - Vol. %	7.9
Visible Emissions at Collector Discharge - % Opacity	
Particulate Emissions	
Probe and Filter catch	
gr/DSCF	1.76
gr/ACF	1.43
lb/hr	105.
lb/ton	-
Total catch(1)	
gr/DSCF	
gr/ACF	
lb/hr	
lb/ton	

(1) No analysis of back-half on in-stack filter tests.

TABLE 82

FACILITY L2

Summary of Results

Run Number	1	2	3	Average
Date	12/5/78	12/5/78	12/6/78	-
Test Time - Minutes	120	120	120	120
Production Rate - TPH	-	-	-	-
Stack Effluent				
Flow rate - ACFM	9780	9830	10340	9983
Flow rate- DSCFM	8120	8150	8560	8277
Temperature - ^{o}F	129	123	136	129
Water vapor - Vol. %	8.4	9.4	6.7	8.2
Visible Emissions at Collector Discharge - % Opacity	see Table 83	see Table 84	see Table 85	-
Particulate Emissions				
Probe and Filter catch				
gr/DSCF	0.010	0.005	0.007	0.007
gr/ACF	0.008	0.004	0.006	0.006
lb/hr	0.73	0.38	0.48	0.53
lb/ton	-	-	-	-
Total catch(1)				
gr/DSCF				
gr/ACF				
lb/hr				
lb/ton				

(1) No analysis of back-half on in-stack filter tests.

TABLE 83

FACILITY L2

Summary of Visible Emissions

Date: 12/5/78

Type of Plant: Clay

Type of Discharge: Stack

Distance from Observer to Discharge Point: 25 ft.

Location of Discharge: Baghouse

Height of Observation Point: 100 ft.

Height of Point of Discharge: 100 Ft.

Direction of Observers from Discharge Point: Southeast

Description of Background: Clear Blue

Description of Sky: Clear Blue

Wind Direction: East

Wind Velocity: 5-10 mi/hr.

Color of Plume: White

Detached Plume: Yes

Duration of Observation: approx. 120 minutes

SUMMARY OF AVERAGE OPACITY

Set Number	Time Start	Time End	Opacity Sum	Opacity Average	Set Number	Time Start	Time End	Opacity Sum	Opacity Average
1	0953:00	0959:15	120	5	21	1202:30	1203:00	10	5
2	0959:15	1005:45	120	5					
3	1005:45	1011:45	120	5					
4	1011:45	1018:15	120	5					
5	1018:15	1024:15	120	5					
6	1024:15	1030:45	120	5					
7	1030:15	1037:00	100	4.2					
8	1037:00	1039:00							
	1044:00	1048:00	80	3.3					
9	1048:00	1054:15	120	5					
10	1054:15	1100:15	120	5					
11	1100:15	1106:15	120	5					
12	1106:15	1112:15	120	5					
13	1112:15	1118:30	120	5					
14	1118:30	1124:30	120	5					
15	1124:30	1131:00	120	5					
16	1131:00	1137:00	120	5					
17	1137:00	1143:15	120	5					
18	1143:15	1149:30	120	5					
19	1149:30	1156:30	115	4.8					
20	1156:30	1202:30	110	4.6					

TABLE 84

FACILITY L2

Summary of Visible Emissions

Date: 12/78

Type of Plant: Clay

Type of Discharge: Stack

Distance from Observer to Discharge Point: 25 ft.

Location of Discharge: Baghouse

Height of Observation Point: 100 ft.

Height of Point of Discharge: 100 ft.

Direction of Observer from Discharge Point: Sout east

Description of Background: Clear Blue

Description of Sky: Clear Blue

Wind Direction: East

Wind Velocity: 5-10 mi/hr.

Color of Plume: White

Detached Plume: Yes

Duration of Observation: 128 minutes

SUMMARY OF AVERAGE OPACITY

Set Number	Time Start	Time End	Opacity Sum	Opacity Average	Set Number	Time Start	Time End	Opacity Sum	Opacity Averag
1	1357	1403	0	0	21	1557	1603	0	0
2	1403	1409	0	0	22	1603	1605	0	0
3	1409	1415	0	0					
4	1415	1421	0	0					
5	1421	1427	0	0					
6	1427	1433	0	0					
7	1433	1439	0	0					
8	1439	1445	0	0					
9	1445	1451	0	0					
10	1451	1457	0	0					
11	1457	1503	0	0					
12	1503	1509	0	0					
13	1509	1515	0	0					
14	1515	1521	0	0					
15	1521	1527	0	0					
16	1527	1533	0	0					
17	1533	1539	0	0					
18	1539	1545	0	0					
19	1545	1551	0	0					
20	1551	1557	0	0					

TABLE 85

FACILITY L2

Summary of Visible Emissions

Date: 12/5/78

Type of Plant: Clay

Type of Discharge: Stack

Distance from Observer to Discharge Point: 25 ft.

Location of Discharge: Baghouse

Height of Observation Point: 100 ft.

Height of Point of Discharge: 100 ft.

Direction of Observer from Discharge Point: South east

Description of Background: Clear Blue

Description of Sky: Clear Blue

Wind Direction: East

Wind Velocity: 5-10 mi/hr.

Color of Plume: White

Detached Plume: Yes

Duration of Observation: approx. 120 minutes

SUMMARY OF AVERAGE OPACITY

Set Number	Time Start	Time End	Opacity Sum	Opacity Average	Set Number	Time Start	Time End	Opacity Sum	Opacity Average
1	1050	1056	0	0					
2	1056	1102	0	0					
3	1102	1108	0	0					
4	1108	1114	0	0					
5	1114	1120	0	0					
6	1120	1126	0	0					
7	1126	1132	0	0					
8	1132	1138	0	0					
9	1138	1144	0	0					
10	1144	1150	0	0					
11	1152	1158	0	0					
12	1158	1204	0	0					
13	1204	1210	0	0					
14	1210	1216	0	0					
15	1216	1222	0	0					
16	1222	1228	0	0					
17	1228	1234	0	0					
18	1234	1240	0	0					
19	1240	1246	0	0					
20	1246	1251	0	0					

TABLE 86

FACILITY M1

Summary of Results

Run Number	1	2	3	Average
Date	6/14/78	6/15/78	6/15/78	-
Test Time - Minutes	120	120	120	120
Production Rate - TPH	-	-	-	-
Stack Effluent				
Flow rate - ACFM	1840	1490	1560	1630
Flow rate- DSCFM	1620	1300	1360	1427
Temperature - ^{o}F	124	121	124	123
Water vapor - Vol. %	2.8	4.1	4.2	3.7
Visible Emissions at Collector Discharge - % Opacity	see Table 88	see Table 89	see Table 90	-
Particulate Emissions				
Probe and Filter catch				
gr/DSCF	0.001	0.001	0.007	0.003
gr/ACF	0.001	0.001	0.006	0.003
lb/hr	0.01	0.02	0.09	0.04
lb/ton	-	-	-	-
Total catch(1)				
gr/DSCF				
gr/ACF				
lb/hr				
lb/ton				

(1) No analysis of back-half on in-stack filter tests.

Table 87
FACILITY M1
(Inlet)
Summary of Results

Run Number	1	2	3	Average
Date	6/15/78			
Test Time-minutes				
Production rate - TPH				
Stack Effluent				
Flow rate - ACFM	2,060			
Flow rate - DSCFM	1,740			
Temperature - °F	123			
Water vapor - Vol.%	6.0			
Visible Emissions at Collector Discharge - Percent Opacity				
Particulate Emissions				
Probe and Filter Catch				
gr/DSCF	1.04			
gr/ACF				
lb/hr	15.6			
lb/ton				
Total Catch				
gr/DSCF				
gr/ACF				
lb/hr				
lb/ton				

TABLE 88

FACILITY M1

Summary of Visible Emissions

Date: 6/14/78

Type of Plant: Clay

Type of Discharge: Stack

Distance from Observer to Discharge Point: 90 ft.

Location of Discharge: Baghouse

Height of Observation Point: 35 ft.

Height of Point of Discharge:

Direction of Observer from Discharge Point: East

Description of Background: Sky

Description of Sky: Partly cloudy

Wind Direction: NNE

Wind Velocity: 10 mi/hr.

Color of Plume:

Detached Plume:

Duration of Observation: 151 minutes

SUMMARY OF AVERAGE OPACITY

Set Number	Time Start	Time End	Opacity Sum	Opacity Average	Set Number	Time Start	Time End	Opacity Sum	Opacity Average
1	1538	1544	0	0	21	1738	1744	0	0
2	1544	1550	0	0	22	1744	1750	0	0
3	1550	1556	0	0	23	1750	1756	0	0
4	1556	1602	0	0	24	1756	1802	0	0
5	1602	1608	0	0	25	1802	1808	0	0
6	1608	1614	0	0	26	1808	1809	0	0
7	1614	1620	0	0	27				
8	1620	1626	0	0	28				
9	1626	1632	0	0	29				
10	1632	1638	0	0	30				
11	1638	1644	0	0	31				
12	1644	1650	0	0	32				
13	1650	1656	0	0	33				
14	1656	1702	0	0	34				
15	1702	1708	0	0	35				
16	1708	1714	0	0	36				
17	1714	1720	0	0	37				
18	1720	1726	0	0	38				
19	1726	1732	0	0	39				
20	1732	1738	0	0	40				

TABLE 89

FACILITY M1

Summary of Visible Emissions

Date: 6/15/78

Type of Plant: Clay

Type of Discharge: Stack

Distance from Observer to Discharge Point: 90 ft.

Location of Discharge: Baghouse

Height of Observation Point: 35 ft.

Height of Point of Discharge:

Direction of Observer from Discharge Point: East

Description of Background: Sky

Description of Sky: cloudy

Wind Direction: NNE

Wind Velocity: 10 mi/hr.

Color of Plume:

Detached Plume:

Duration of Observation: 134 minutes

SUMMARY OF AVERAGE OPACITY

Set Number	Time Start	Time End	Opacity Sum	Opacity Average	Set Number	Time Start	Time End	Opacity Sum	Opacity Average
1	913	919	0	0	21	1113	1119	0	0
2	919	925	0	0	22	1119	1125	0	0
3	925	931	0	0	23	1125	1127	0	0
4	931	937	0	0	24				
5	937	943	0	0	25				
6	943	949	0	0	26				
7	949	955	0	0	27				
8	955	1001	0	0	28				
9	1001	1007	0	0	29				
10	1007	1013	0	0	30				
11	1013	1019	0	0	31				
12	1019	1025	0	0	32				
13	1025	1031	0	0	33				
14	1031	1037	0	0	34				
15	1037	1043	0	0	35				
16	1043	1049	0	0	36				
17	1049	1055	0	0	37				
18	1055	1101	0	0	38				
19	1101	1107	0	0	39				
20	1107	1113	0	0	40				

TABLE 90

FACILITY M1

Summary of Visible Emissions

Date: 6/15/78

Type of Plant: Clay

Type of Discharge: Stack

Distance from Observer to Discharge Point: 90 ft.

Location of Discharge: Baghouse

Height of Observation Point: 35 ft.

Height of Point of Discharge:

Direction of Observers from Discharge Point: East

Description of Background: Sky

Description of Sky: cloudy

Wind Direction: NNE

Wind Velocity: 10 mi/hr.

Color of Plume:

Detached Plume:

Duration of Observation: 183 minutes

SUMMARY OF AVERAGE OPACITY

Set Number	Time Start	Time End	Opacity Sum	Opacity Average	Set Number	Time Start	Time End	Opacity Sum	Opacity Average
1	1332	1338	0	0	21	1606	1608		
2	1338	1344	0	0		1625	1629	0	0
3	1344	1350	0	0	22	1629	1634	0	0
4	1350	1356	0	0	24				
5	1356	1402	0	0	25				
6	1402	1408	0	0	26				
7	1442	1448	0	0	27				
8	1448	1454	0	0	28				
9	1454	1500	0	0	29				
10	1500	1506	0	0	30				
11	1506	1512	0	0	31				
12	1512	1518	0	0	32				
13	1518	1524	0	0	33				
14	1524	1530	0	0	34				
15	1530	1536	0	0	35				
16	1536	1542	0	0	36				
17	1542	1548	0	0	37				
18	1548	1554	0	0	38				
19	1554	1660	0	0	39				
20	1600	1606	0	0	40				

TABLE 91

FACILITY M2

Summary of Results

Run Number	1	2	3	Average
Date	6/14/78	6/15/78	6/15/78	-
Test Time - Minutes	120	120	120	120
Production Rate - TPH	-	-	-	-
Stack Effluent				
Flow rate - ACFM	2580	2460	2450	2497
Flow rate- DSCFM	2100	2090	2100	2097
Temperature - ^{o}F	183	151	150	161
Water vapor - Vol. %	1.1	1.7	1.6	1.5
Visible Emissions at Collector Discharge - % Opacity	see Table 93	see Table 94	see Table 95	-
Particulate Emissions				
Probe and Filter catch				
gr/DSCF	0.002	0.002	0.001	0.002
gr/ACF	0.002	0.002	0.001	0.002
lb/hr	0.03	0.04	0.02	0.03
lb/ton	-	-	-	-
Total catch(1)				
gr/DSCF				
gr/ACF				
lb/hr				
lb/ton				

(1) No analysis of back-half on in-stack filter tests.

Table 92
FACILITY M2
(Inlet)
Summary of Results

Run Number	1	2	3	Average
Date	6/15/78			
Test Time-minutes	130			
Production rate - TPH				
Stack Effluent				
Flow rate - ACFM	2,560			
Flow rate - DSCFM	2,170			
Temperature - °F	170			
Water vapor - Vol.%	2.0			
Visible Emissions at Collector Discharge - Percent Opacity				
Particulate Emissions				
Probe and Filter Catch				
gr/DSCF	5.24			
gr/ACF				
lb/hr	97.4			
lb/ton				
Total Catch				
gr/DSCF				
gr/ACF				
lb/hr				
lb/ton				

TABLE 93

FACILITY M2

Summary of Visible Emissions

Date: 6/14/78

Type of Plant: Clay

Type of Discharge: Stack

Distance from Observer to Discharge Point: 90 ft.

Location of Discharge: Baghouse

Height of Observation Point: 85 ft.

Height of Point of Discharge:

Direction of Observer from Discharge Point: East

Description of Background: Sky

Description of Sky: Partly cloudy

Wind Direction: NNE

Wind Velocity: 10 mi/hr.

Color of Plume:

Detached Plume:

Duration of Observation: 30 minutes

SUMMARY OF AVERAGE OPACITY

Set Number	Time Start	Time End	Opacity Sum	Opacity Average	Set Number	Time Start	Time End	Opacity Sum	Opacity Average
1	1528	1534	0	0	21				
2	1534	1540	0	0	22				
3	1540	1546	0	0	23				
4	1546	1552	0	0	24				
5	1552	1558	0	0	25				
6					26				
7					27				
8					28				
9					29				
10					30				
11					31				
12					32				
13					33				
14					34				
15					35				
16					36				
17					37				
18					38				
19					39				
20					40				

TABLE 94

FACILITY M2

Summary of Visible Emissions

Date: 6/15/78

Type of Plant: Clay

Type of Discharge: Stack

Distance from Observer to Discharge Point: 90 ft.

Location of Discharge: Baghouse

Height of Observation Point: 85 ft.

Height of Point of Discharge:

Direction of Observer from Discharge Point: East

Description of Background: Sky

Description of Sky: cloudy

Wind Direction: NNE

Wind Velocity: 10 mi/hr.

Color of Plume:

Detached Plume:

Duration of Observation: 128 minutes

SUMMARY OF AVERAGE OPACITY

Set Number	Time Start	Time End	Opacity Sum	Opacity Average	Set Number	Time Start	Time End	Opacity Sum	Opacity Averag
1	850	856	0	0	21	1050	1056	0	0
2	856	902	0	0	22	1056	1058	0	0
3	902	908	0	0	23				
4	908	914	0	0	24				
5	914	920	0	0	25				
6	920	926	0	0	26				
7	926	932	0	0	27				
8	932	938	0	0	28				
9	938	944	0	0	29				
10	944	950	0	0	30				
11	950	956	0	0	31				
12	956	1002	0	0	32				
13	1002	1008	0	0	33				
14	1008	1014	0	0	34				
15	1014	1020	0	0	35				
16	1020	1026	0	0	36				
17	1026	1032	0	0	37				
18	1032	1038	0	0	38				
19	1038	1044	0	0	39				
20	1044	1050	0	0	40				

TABLE 95

FACILITY M2

Summary of Visible Emissions

Date: 6/15/78

Type of Plant: Clay

Type of Discharge: Stack

Distance from Observer to Discharge Point: 90 ft.

Location of Discharge: Baghouse

Height of Observation Point: 85 ft.

Height of Point of Discharge:

Direction of Observers from Discharge Point: East

Description of Background: Sky

Description of Sky: Partly cloudy

Wind Direction: NNE

Wind Velocity: 10 mi/hr.

Color of Plume:

Detached Plume:

Duration of Observation: 139 minutes

SUMMARY OF AVERAGE OPACITY

Set Number	Time Start	Time End	Opacity Sum	Opacity Average	Set Number	Time Start	Time End	Opacity Sum	Opacity Average
1	1359	1405	0	0	21	1559	1605	0	0
2	1405	1411	0	0	22	1605	1611	0	0
3	1411	1417	0	0	23	1611	1617	0	0
4	1417	1423	0	0	24	1617	1618	0	0
5	1423	1429	0	0	25				
6	1429	1435	0	0	26				
7	1435	1441	0	0	27				
8	1441	1447	0	0	28				
9	1447	1453	0	0	29				
10	1453	1459	0	0	30				
11	1459	1505	0	0	31				
12	1505	1511	0	0	32				
13	1511	1517	0	0	33				
14	1517	1523	0	0	34				
15	1523	1529	0	0	35				
16	1529	1535	0	0	36				
17	1535	1541	0	0	37				
18	1541	1547	0	0	38				
19	1547	1553	0	0	39				
20	1553	1559	0	0	40				

TABLE 96

FACILITY N

Summary of Results of Fugitive Emission Tests performed on three separate rail car loadings

Observation area	Accumulated observation period (min:sec)	Accumulated emission time (min:sec)	% Emission (AET/AOP x 100)
		Test #1	
A	144:32	22:42	15.7
B	144:32	17:30	12.1
C	144:32	0:00	0
		Test #2	
A	99:45	18:50	18.9
B	99:45	2:06	2.1
C	99:45	0.00	0
		Test #3	
A	154:20	63:42	41.3
B	154:20	0:20	0.2
C	154:20	9:21	6.1

1. Designation of observation positions

A. Loading hose

B. West end of shed

C. East end of shed

TABLE 97

SUMMARY OF METHOD 22 RESULTS — FACILITY P

Time period	Observed time (minutes)	Percent of time with visible emissions	
		Observer	
		1	2
Test point 5, Final screens, 10/3/79			
1035-1055	20	0	<1
1105-1125	20	<1	0
1130-1150	20	<1	0
Test point 7, Transfer point, 10/3/79			
1324-1424	60	1	1

TABLE 98

METHOD 9 - 6-MINUTE AVERAGES[a]
FACILITY P

Run	TP-5 Final Screens		TP-7 Transfer Point
	Observer		Observer
	3	4	3
1	0	0	3
2	0	0	0
3	0	0	0
4	0	0	0
5	0	0	0
6	0	0	0
7	0	0	0
8	0	0	0
9	0	0	0
10	0	0	0

[a]Values reported in percent opacity

TABLE 99

METHOD 9 - 6-MINUTE AVERAGES[a]

FACILITY P

Run	TP-1 Primary Crusher		TP-4 Impact Crusher		TP-6 Cone Crusher	
	Observer 3	Observer 4	Observer 3	Observer 4	Observer 3	Observer 4
1	9	13	15	10	4	11
2	7	11	11	7	5	18
3	14	15	11	7	9	22
4	14	17	11	10	11	25
5	13	11	11	10	9	23
6	11	11	10	8	10	17
7	12[b]	11	10	13	9	16
8	7[c]	10	11	13	7	15
9	-	13	13	10	10	15
10	9	10	11	9	8	16
11	11	15			8	15
12	10	18			13	21
13	13	10			7	13
14	8	8			8	13
15	10	10			8	15
16	10	11			1	4
17	8	5			0	2
18					0	1
19					0	1
20					1	4

[a]Values reported in percent opacity.

[b]4-minute average

[c]5-minute average

TABLE 100

SUMMARY OF METHOD 22 RESULTS - FACILITY Q

Time period	Observed time (minutes)	Percent of time with visible emissions	
		Observer	
		1	2
Test point 2, Initial screens, 10/10/79 - 10/11/79			
1010-1040[a]	30	34	65
0820-0856	30	4	7
Test point 3, Transfer point, 10/10/79			
0851-0921[a]	30	27	31
0931-1001[a]	30	64	67
Test point 5, Secondary screens, 10/8/79			
0848-0918	30	0	0
0940-1010	30	0	0
1015-1045	30	0	0
1057-1127	30	<1	0
Test point 7, Final screens, 10/8/79			
1250-1320	30	0	0
1330-1400	30	0	0
1407-1437	30	0	0
1451-1521	30	0	0

[a]"Red Rock" material. Not processed under representative conditions. Data omitted.

TABLE 101

METHOD 9 - 6-MINUTE AVERAGES[a]
FACILITY Q

Run	TP-2 Initial Screens		TP-3 Transfer Point[b]		TP-5 Secondary Screens		TP-7 Final Screens	
	Observer		Observer		Observer		Observer	
	3	4	3	4	3	4	3	4
1	1	3	0	0	0	0	0	0
2	0	3	1	1	0	0	0	0
3	0	2	1	1	0	0	0	0
4	0	3	2	2	0	<1	0	0
5	1	5	1	1	0	1	0	0
6	0	10	10	12	0	1*	0	<1
7	2	8	9	10	0	2	0	0
8	0	4	8	8	0	2	0	0
9	1	9	8	9	0	<1	0	0
10	2	7	8	9	0	1	0	0
11	1	5	10	7	0	2	0	0
12	1	3	9	7	0	3	0	0
13	1	4	14	10	0	1	0	0
14	1	2	13	8	0	1	0	0
15	0	1	12	9	0	0	0	0
16	0	1	11	9	0	1	0	0
17	0	1	12	10	0	1	0	0
18	0	2	12	9	0	0	0	0
19	0	2	14	10	0	0	0	0
20	0	2	13	10	0	0	0	0

*Five minute average

[a]Values reported in percent opacity

[b]"Red Rock" material. Not processed under representative conditions. Data omitted.

TABLE 102

METHOD 9 - 6-MINUTE AVERAGES[a]
FACILITY Q

Run	TP-1 Primary crusher		TP-6 Cone crusher	
	Observer		Observer	
	3	4	3	4
1	11	11	15	12
2	11	14	18	17
3	6	8	18	19
4	12	18	17	19
5	12	17	10	12
6	3	5	15	18
7	2	9	19	19
8	1	4	20	21
9	2	8	23	23
10	1	6	24	23
11	1	6	28	24
12	1	7	26	26
13	2	8	28[b]	28[b]
14	3	12	25	23
15	3	10	28	28
16	3	6	29	26
17	2	6	27[c]	26[c]
18	2	5	27	29
19	1	2	29	34
20	1	3	26	38
21			25[c]	39[c]

[a]Values reported in percent opacity.

[b]4-minute average.

[c]5-minute average.

TABLE 103

SUMMARY OF METHOD 22 RESULTS - FACILITY R

Time period	Observed time (minutes)	Percent of time with visible emissions	
		Observer	
		1	2
Test point 1, Initial screens 10/12/79, 10/15/79			
0720-0750	30	2	1
0800-0830	30	1	<1
0840-0910	30	2	1
0920-0941 } 0722-0732 }	30	2	4
Test point 3, Transfer point, 10/16/79			
0731-0801	30	6	12
Test point 4, Secondary screens, 10/16/79			
0907-0937	30	5	15
0945-1015	30	1	1
1035-1105	30	42[a]	4[a]
1310-1340	30	5	10
Test point 6, Final screens, 10/15/79			
1020-1050	30	0	0
1055-1125	30	0	0
1130-1200	30	0	0
1303-1333	30	0	0
Test point 7A, Transfer point, 10/15/79			
1610-1640	30	0	0
1646-1716	30	0	0
Test point 7B, Transfer point, 10/16/79			
1415-1445	30	0	0
1455-1525	30	4	4

[a]Data omitted - wind interference.

TABLE 104

METHOD 9 - 6-MINUTE AVERAGES[a]
FACILITY R

Run	TP-1 Initial Screens		TP-3 Transfer Point		TP-4 Secondary Screens		TP-6 Final Screens		TP-7 Transfer Point	
	Observer		Observer		Observer		Observer		Observer	
	3	4	3	4	3	4	3	4	3	4
1	<1	0	0	0	0	<1	0	0	0	0
2	0	0	0	1	<1	3	0	0	0	0
3	2	0	2	1	<1	1	<1	0	0	0
4	1	1	<1	<1	0	0	1	<1	0	0
5	3	1	0	0	0	0	0	0	0	0
6	1	<1	1	4	0	0	0	0	0	0
7	1	0	2	4	0	0	0	0	0	0
8	1	0	<1	3	0	0	0	0	0	0
9	1	<1	3	4	0	0	0	0	0	0
10	1	1	4	5	0	0	0	0	0	0
11	3	<1			0[b]	0[b]	0	0	0	0
12	1	0			<1[b]	0[b]	<1	0	0	0
13	<1	<1			4[b]	0[b]	0	0	0	0
14	<1	1			5[b]	0[b]	0	0	0	0
15	<1	<1			5[b]	0[b]	<1	0	0	0
16	0	0			0	0	0	0	<1	0
17	0	0			0	0	0	0	<1	1
18	0	0			0	0	0	0	0	0
19	2	0			0	0	0	0	0	0
20	2	0			0	0	0	0	2	3

[a]Values reported in percent opacity
[b]Data omitted - wind interference

TABLE 105

METHOD 9 - 6-MINUTE AVERAGES[a]
FACILITY R

Run	TP-2 Primary crusher		TP-5 Cone crusher	
	Observer		Observer	
	3	4	3	4
1	14	13	8	12
2	16	14	9	14
3	16	14	9	17
4	16	9	12	15
5	12	13	13	15
6	9	15	11	15
7	13	14	13	16
8	9	14	12	14
9	13	15	13	16
10	12	13	12	14
11	17	16	12	17
12	9	13	10	17
13	14	11	9	17
14	13	12	7	10
15	15	13	8	15
16	8	9	12	10
17	6	6	13	11
18	7	9	11	11
19	10	11	11	11
20	9	12	12	11

[a]Data reported in percent opacity.

TABLE 106

SUMMARY OF METHOD 22 RESULTS - FACILITY S

Time period	Observed time (minutes)	Percent of time with visible emissions	
		Observer	
		1	2
Test point 2, Initial Screens, 10/24/79			
1516-1546	30	0	0
1558-1628	30	0	0
1100-1130	30	0	0
1302-1332	30	0	0
Test point 4, Secondary screens, 10/22/79, 10/23/79			
1108-1138	30	1	10
1143-1158	15	1	13
0745-0805	15	1	5
0810-1840	30	1	6
0845-0915	30	1	7
Test point 6, Transfer point, 10/23/79, 10/24/79			
1257-1327	30	0	0
1335-1350	15	0	1
1338-1353	15	0	0
1355-1425	30	0	0
1433-1503	30	0	0
Test point 7, Transfer point, 10/25/79			
0750-0820	30	0	0
0826-0856	30	0	0
0915-0945	30	0	0
0955-1025	30	0	0

TABLE 107

METHOD 9 - 6-MINUTE AVERAGES[a]
FACILITY S

Run	TP-2 Initial Screens		TP-4 Secondary Screens		TP-6 Transfer Point		TP-7 Transfer Point	
	Observer		Observer		Observer		Observer	
	3	4	3	4	3	4	3	4
1	0	0	4	2	0	0	0	0
2	0	0	3	0	0	0	0	0
3	0	0	0	0	0	0	0	0
4	0	0	0	0	0	0	0	0
5	0	0	0	0	0	0	0	0
6	0	0	0	0	0	0	0	0
7	0	0	0	0	0	0	0	0
8	0	0	0	0	0	0	0	0
9	0	0	0	0	0	0	0	0
10	0	0	0	0	0	0	0	0
11	0	0	0	0	0	0	0	0
12	0	0	0	0	0	0	0	0
13	0	0	0	0	0	0	0	0
14	0	0	0	0	0	0	0	0
15	0	0	0	0	0	0	0	0
16	0	0	0	0	0	0	0	0
17	0	0	0	0	0	0	0	0
18	0	0	0	0	0	0	0	0
19	0	0	0	0	0	0	0	0
20	0	0	0	0	0	0	0	0

[a]Values reported in percent opacity

TABLE 108

METHOD 9 - 6-MINUTE AVERAGES[a]
FACILITY S

Run	TP-1 Primary crusher		TP-3 4-1/2 in. Cone crusher		TP-5 5-1/2 in. Cone crusher	
	Observer		Observer		Observer	
	3	4	3	4	3	4
1	2	1	3	3	0	0
2	1	2	4	4	0	2
3	1	1	4	5	3	5
4	1	0	2	3	5	5
5	1	1	4	3	4	4
6	1	3	6	4	10	9
7	1	2	6	4	11	9
8	<1	1	3	2	14	10
9	0	2	2	2	11	10
10	1	1	5	3	13	10
11	1	1	4	3	11	11
12	0	0	5	5	11	10
13	0	0	3	2	12	15
14	0	1	5	4	8	9
15	2	2	5	3	10	12
16	1	0	4	2	12	12
17	3	2	3	0	9	10
18	3	3	3	2	6	9
19	2	1	3	1	7	11
20	0	1	1	2	5	9

[a]Data reported in percent opacity.

TABLE 109

SUMMARY OF METHOD 22 RESULTS - FACILITY T

Time period	Observed time (minutes)	Percent of time with visible emissions	
		Observer	
		1	2
Test point 2, Transfer point, 10/26/79, 10/29/79			
1353-1427	30	0	1
1428-1458	30	4	2
1533-1603	30	3	1
1125-1155	30	2	0
Test point 3, Initial screens, 10/29/79, 10/30/79			
1300-1330	30	0	0
1336-1406	30	0	0
1412-1542	30	0	0
1450-1520	30	0	0
Test point 5, Storage bin, 10/29/79, 10/30/79			
0755-0825	30	0	0
1023-1053	30	0	0
0908-0938	30	0	0
0947-1017	30	0	0

TABLE 110

METHOD 9 - 6-MINUTE AVERAGES[a]
FACILITY T

Run	TP-2 Transfer Point		TP-3 Initial Screens		TP-5 Storage Bin	
	Observer		Observer		Observer	
	3	4	3	4	3	4
1	0	0	0	0	0	0
2	0	0	0	0	0	0
3	0	0	0	0	0	0
4	0	0	0	0	0	0
5	0	0	0	0	0	0
6	0	0	0	0	0	0
7	4	0	0	0	0	0
8	0	0	0	0	0	0
9	0	0	0	0	0	0
10	0	0	0	0	0	0
11	0	0	0	0	0	0
12	0	0	0	0	0	0
13	0	0	0	0	0	<1
14	0	0	0	0	0	0
15	0	0	0	0	0	<1
16	0	0	0	0	0	0
17	0	0	0	0	0	0
18	0	0	0	0	0	0
19	0	0	0	0	0	<1
20	0	0	0	0	0	0

[a]Values reported in percent opacity

TABLE 111

METHOD 9 - 6-MINUTE AVERAGES[a]
FACILITY T

Run	TP-1 Primary crusher		TP-4 Cone crusher	
	Observer		Observer	
	3	4	3	4
1	4	8	18	15
2	6	7	21	14
3	9	8	22	14
4	3	3	23	15
5	5	5	19	13
6	10	8	17	11
7	4	3	20	13
8	9	5	15	8
9	8	7	15	8
10	7	7	15	9
11	8	8	16	6
12	8	8	6	7
13	8	6	10	11
14	13	8	17	16
15	10	6	19	16
16	13	8	18	15
17	10	5	15	15
18	9	4	16	13
19	10	6	18	16
20	6	5	13	14

[a]Data reported in percent opacity.

TECHNICAL REPORT DATA
(Please read Instructions on the reverse before completing)

1. REPORT NO. EPA-450/3-82-014	2.	3. RECIPIENT'S ACCESSION NO.
4. TITLE AND SUBTITLE Air Pollution Control Techniques for Non-Metallic Minerals Industry		5. REPORT DATE August 1982
		6. PERFORMING ORGANIZATION CODE
7. AUTHOR(S)		8. PERFORMING ORGANIZATION REPORT NO.
9. PERFORMING ORGANIZATION NAME AND ADDRESS U.S. Environmental Protection Agency Office of Air Quality Planning and Standards Emission Standards and Engineering Division Research Triangle Park, N.C. 27711		10. PROGRAM ELEMENT NO.
		11. CONTRACT/GRANT NO.
12. SPONSORING AGENCY NAME AND ADDRESS DAA for Air Quality Planning and Standards Office of Air, Noise, and Radiation U.S. Environmental Protection Agency Research Triangle Park, North Carolina 27711		13. TYPE OF REPORT AND PERIOD COVERED Final
		14. SPONSORING AGENCY CODE EPA/200/04
15. SUPPLEMENTARY NOTES		

16. ABSTRACT

Air pollution control technologies for the control of particulate emissions from non-metallic mineral processing plants are evaluated. Specific control technologies considered include the use of local ventilation followed by fabric filter collection and wet dust suppression techniques. Performance data based on mass particulate measurements and visual observations are presented. In addition, the capital and annualized emission control costs for several model plant sizes are estimated.

17. KEY WORDS AND DOCUMENT ANALYSIS

a. DESCRIPTORS	b. IDENTIFIERS/OPEN ENDED TERMS	c. COSATI Field/Group
Air Pollution Control Technology Non-Metallic Minerals Particulate Emissions	Air Pollution Control Particulate Control Fabric Filter Wet Dust Suppressions Non-Metallic Minerals	13 B

18. DISTRIBUTION STATEMENT Ur limited	19. SECURITY CLASS *(This Report)* Unclassified	21. NO. OF PAGES 317
	20. SECURITY CLASS *(This page)* Unclassified	22. PRICE

EPA Form 2220-1 (Rev. 4-77) PREVIOUS EDITION IS OBSOLETE

United States
Environmental Protection
Agency

Office of Air, Noise, and Radiation
Office of Air Quality Planning and Standards
Research Triangle Park NC 27711

Publication No. EPA-450/3-82-014

Official Business
Penalty for Private Use
$300

Postage and
Fees Paid
Environmental
Protection
Agency
EPA 335

If your address is incorrect, please change on the above label; tear off; and return to the above address.
If you do not desire to continue receiving this technical report series, CHECK HERE ☐ ; tear off label; and return it to the above address.