Note: This is a reference cited in *AP 42, Compilation of Air Pollutant Emission Factors, Volume I Stationary Point and Area Sources.* AP42 is located on the EPA web site at www.epa.gov/ttn/chief/ap42/

The file name refers to the reference number, the AP42 chapter and section. The file name "ref02_c01s02.pdf" would mean the reference is from AP42 chapter 1 section 2. The reference may be from a previous version of the section and no longer cited. The primary source should always be checked.

DRAFT/WP
d3006-4/9711
05/05/93 1

Reference 50 (BR)
(AP-42)

Emission Test Report
Review Checklist

Reviewer: BRIAN SHRAGER
Review Date: 4/11/94

A. Background Information

1. Facility name: CHEMSTAR LIME COMPANY

   Location: BANCROFT, IDAHO

2. Source category: LIME

3. Test date: 2/12-15, 1993

4. Test sponsor: Chemstar Lime Company

5. Testing contractor: American Env. Testing Company, Inc. (AET)

6. Purpose of test: Compliance Verification

7. Pollutants measured

   PM - Method 5 PM-10 CO - Method 10 SO_2 - Method 6C NO_x - Method 7E VOC Pb CO_2

   Others (list):

8. Process overview: On an attached page provide a block diagram of the unit operations and associated air pollution control systems at the facility. Identify process tested with letters from the beginning of the alphabet (A, B, C, etc.) and APC systems with letters from end of alphabet (V, W, X, etc.). Also identify test locations with Arabic numerals (1,2,3, ...). Using the ID symbols from that sketch complete the table below that identifies processes or unit operations tested.

Test ID	Process	Process ID	Emissions tested		APCD (controlled emissions only)
			Uncontrolled	Controlled	
1	DC-120 Primary Crushing	A		✓	Fabric Filter
2	DC-123 Primary Screening & Crushing	B		✓	"
3	DC-126 Conveyor transfer pt.	C		✓	"
4	DC-129 Conveyor transfer pt.	D		✓	"
5	DC-230 Sec. + Tert. Screening	E		✓	"
6	DC-303 Kiln Feed	F		✓	"
7	DC-316 VERTICAL LIME KILN	G		✓	"

B. Process Information

1. Provide a brief narrative description of the process. With as much detail as possible, (e.g., if a furnace or conveyor system is used, identify the type of unit) describe the equipment used for those operations tested. (Note: If process description provided in test report is adequate, attach copy or reproduce here.)

See attached pages 2a → 2f

PERMIT TO CONSTRUCT

PERMIT NUMBER

0420 - 0029

PERMITTEE, PROJECT, AND LOCATION

Chemstar Lime Company
Lime Quarry
Soda Springs, Idaho

SOURCE

Primary crushing, DC-120

1. SOURCE DESCRIPTION

1.1 Process Description

Run-of-mine metallurgical grade limestone (overall dimension of 36 inches and smaller) is unloaded from 50 ton capacity haul tucks to a run-of-mine feed bin. Limestone from the bin is discharged to scalping screen by a feed system. Ore from the scapling screen is either sent directly to a primary screen feed conveyor belt or diverted to the primary jaw crusher then discharged to the primary screen conveyor belt. Ore from the secondary crusher is also discharged to the primary screen feed conveyor belt.

1.2 Controls

Water spray is used to control emissions resulting from haul truck unloading to run-of-mine feed bin. A Mikropul pulse jet baghouse (Model 1215-10-20) is used to control emissions resulting from the scalping screen, scalping screen discharges, primary crusher, primary crusher discharge and the ore discharge from the secondary crusher to the primary screen feed conveyor belt.

Emission Source

1.3 Stack specifications

The stack associated with the baghouse (DC-120) which controls emissions from primary crushing operations shall meet the following specifications:

Height - 28 feet
Diameter - 1.75 foot
Volume - 8500 ACFM

1.4 Equipment listing

Equipment used in primary crushing:

1.4.1 Run-of-mine bin (120 ton capacity)

ASSISTANT ADMINISTRATOR
PERMITS AND ENFORCEMENT

DATE: March 30, 1992

PERMIT TO CONSTRUCT

PERMITTEE, PROJECT, AND LOCATION

Chemstar Lime Company
Lime Quarry
Soda Springs, Idaho

PERMIT NUMBER

0420 - 0029

SOURCE

"Downhill" belt conveying system, DC-126 & 129

1. SOURCE DESCRIPTION

1.1 Process Description

Crushed and screened limestone is transported approximately one half mile from the quarry to a primary stockpile. The conveying system consists of two conveyor belts and a stacker conveyor.

1.2 Controls

Emission Sources

Water spray is used to control emissions resulting from the stacker conveyor belt discharge to the primary storage pile. Each conveyor belt to conveyor belt transfer (2 transfers) is controlled by an individual baghouse.

1.3 Stack Specifications

1.3.1 The stack associated with the Mikropul pulse jet baghouse (Model 255-10-30) which controls emissions from the transfer of limestone from conveyor belt #1 to conveyor belt #2 shall meet the following specifications:

Height - 3 feet
Diameter - 0.84 feet
Volume - 1,500 ACFM

1.3.2 The stack associated with the Mikropul pulse jet baghouse (Model 255-10-30) which controls emissions from the transfer of limestone from conveyor belt #2 to the primary stockpile stacker conveyor shall meet the following specifications:

Height - 3 feet
Diameter - 0.84 feet
Volume - 1,500 ACFM

1.4 Equipment Listing

ASSISTANT ADMINISTRATOR
PERMITS AND ENFORCEMENT

DATE: March 30, 1992

PERMIT TO CONSTRUCT

PERMITTEE, PROJECT, AND LOCATION

Chemstar Lime Company
Lime Quarry
Soda Springs, Idaho

PERMIT NUMBER

0420 - 0029

SOURCE

Secondary & Tertiary Screening, DC-230 & DC-303

1. SOURCE DESCRIPTION

1.1 Process Description

Limestone from the primary stockpile is transported by the secondary screen feed conveyor belt to the secondary screen. Overflow from the secondary screen which is between 3" and 6" is discharged to a conveyor belt which feeds a stacker conveyor belt which feeds a 3"- 6" stone stockpile. Underflow from the 3" - 6" stockpile is transported by two conveyor belts to a tertiary screen. Overflow from the tertiary screen which is greater than 1" is transported by conveyor belt to the lime kiln.

Overflow from the secondary screen which is between 1" and 3" is discharged to a conveyor belt which feeds a stacker conveyor belt which feeds a 1" - 3" stone stockpile. Underflow from the 1" - 3" stockpile is transported by two conveyor belts to a tertiary screen. Overflow from the tertiary screen which is greater than 1" is transported by conveyor belt to the lime kiln.

Underflow from the secondary and tertiary screens which is less than 1" is transported by two conveyor belts to a spalls storage bin.

1.2 Controls

Water spray is used to control emissions from the following sources: primary stockpile underflow; 1" - 3" and 3" - 6" stockpile underflows; 1" - 3" and 3" - 6" stockpile underflow converyor belts discharge to the tertiary screen feed conveyor belts; 1" - 3" and 3" - 6" stacker conveyor belt loading points; and secondary and tertiary underflow conveyor belt discharge to the spalls storage bin feed conveyor belt.

A Mikropul pulse jet baghouse (Model 1805-10-20) is used to control emissions from the following sources: primary stockpile underflow conveyor belt discharge to the secondary screen; secondary screen;

Emission Source (continued)

DATE: March 30, 1992

ASSISTANT ADMINISTRATOR
PERMITS AND ENFORCEMENT

2f

PERMIT TO CONSTRUCT

PERMITTEE, PROJECT, AND LOCATION

Chemstar Lime Company
Lime Quarry
Soda Springs, Idaho

PERMIT NUMBER

0420 - 0029

SOURCE

Vertical Lim Kiln, DC-316

1. SOURCE DESCRIPTION

1.1 Process Description

Limestone is fed to the dual shaft natural gas fired lime kiln by a system consisting of a conveyor belt, reversible direction conveyor belt, two vibrating feeders and a weigh hopper. Limestone (calcium carbonate) is converted to lime (calcium oxide) by the high temperature of the kiln at a maximum rate of twenty five tons per hour.

1.2 Controls

Emission Source

Emissions from the kiln are controlled by a Fuller pulse jet baghouse (Model 448-3-10).

1.3 Stack Specifications

The stack associated with the baghouse (DC - 316) which controls emissions from the kiln shall meet the following specifications:

Height - 139 feet
Diameter - 4.0 feet
Volume - 59,460 ACFM

1.4 Equipment Listing

Equipment listing:

1.4.1 Conveyor belt
1.4.2 Two vibrating feeders
1.4.3 Weigh hopper
1.4.4 Reversible conveyor belt

ASSISTANT ADMINISTRATOR
PERMITS AND ENFORCEMENT

DATE: March 30, 1992

2. For each process tested list feedstock materials and products. Indicate if activity factors are for feed (F) rate or product (P) rate.

Process ID	Feedstock materials	Products	Basis for activity factor	F/P
A	Run-of-mine metallurgical grade limestone	limestone	Plant	P
B	limestone	limestone	provided	P
C	limestone	limestone	production	P
D	"	"	data	P
E	"	"	for all processes	P
F	"	"		P
G	limestone	lime		P

Basis for data: Pg. 11 Table 3.1.1
(Indicate page/table Nos. in test report)

3. For each process or operation tested and each test run note process capacity and operating rate during test.

Process ID	Capacity	Units	Test ID	Process rate	Units
			1	311	TPH
			2	311	TPH
			3	241	TPH
			4	241	TPH
			5	604	TPH
			6	594	TPH
			7	604	TPD
			4		
			1		
			2		
			3		
			4		
			1		
			2		
			3		
			4		

Basis for data: Avg. production rates during testing period for each test.

C. Air Pollution Control Systems Tested

1. For each air pollution control system pollution control system identified in A.8, note the following

ID	Type of APCD	Manufacturer	Model No.
A	Pulse jet baghouse	MrKropul	1215-10-20
B	"	"	1565-10.2
C	"	"	255-10-30
D	"	"	[illegible] "
E	"	"	1805-10-20
F	"	"	"
G	Pulse jet baghouse	Fuller	448-3-10

Note: Be as specific as possible in identifying APCD. For example, indicate "pulse jet fabric filter" rather than simply "fabric filter."

2. For each system identified above, provide a narrative description. For fugitive systems describe capture techniques as well as the removal techniques (use a separate page if necessary)

See pages 2a - 2f

3. Using the attached parameter list for guidance complete the table below. (Use additional pages as needed.)

See appendix E (Sheets attached to this page) 5a-g

APCD ID	Parameter	Units	Readings			
			Run 1	Run 2	Run 3	Run 4
Type of APCD:						
Type of APCD:						
Type of APCD:						

5a

AMERICAN ENVIRONMENTAL TESTING, INCORPORATED
565 So. Birch Drive 801-266-7111
Spanish Fork, Utah 84660

Baghouse Information Sheet

Client: Chemstar Lime
Date: 2/12-93
Location: Bancroft, Idaho
Manufacturer: Mikropul
Source: DC-120
Serial #: 910-414-H1

Test #1

Time	ΔP in H20	Temperature
Start 1000	—	—
1 1015	2.0	28
2 1030	2.1	29
3 1045	2.1	30
4 1100	2.1	30
5 1115	2.1	30
6 1130	2.0	31
7 1145	2.1	30
8 1200	2.1	29
1215	2.1	30
1230	2.1	30
1245	2.1	30

Test #2

Time	ΔP in H20	Temperature
Start 1345	2.1	30
1 1400	2.1	30
2 1415	2.2	30
3 1430	2.1	31
4 1445	2.0	30
5 1500	2.1	30
6 1515	2.1	30
7 1530	2.0	31
8 1545	2.1	31
1600	2.1	31
1615	2.1	31

Test #3

Time	ΔP in H20	Temperature
Start 1700	2.1	30
1 1715	2.1	30
2 1730	2.0	29
3 1745	2.1	29
4 1800	2.0	29
5 1815	2.1	28
6 1830	2.1	28
7 1845	2.1	27
8 1900	2.1	27

Test #4

Time	ΔP in H20	Temperature
1		
2		
3		
4		
5		
6		
7		
8		

5c

AMERICAN ENVIRONMENTAL TESTING, INCORPORATED
565 So. Birch Drive 801-266-7111
Spanish Fork, Utah 84660

Baghouse Information Sheet

Client: Chemstar Lime Co.
Date: 2/13-93
Location: Bancroft, Idaho
Manufacturer: Mikropul
Source: DC-126
Serial #: 910-414-A7

Test #1

Time	ΔP in H20	Temperature
Start	–	–
1 0945	3.5	28
2 1000	3.6	28
3 1015	3.5	29
4 1030	3.6	31
5 1045	3.6	32
6 1100	3.6	34
7 1115	3.6	34
8 1130	3.6	35
1145		36

Test #2

Time	ΔP in H20	Temperature
Start 1215	3.6	36
1 1230	3.6	36
2 1245	3.5	37
3 1300	3.6	37
4 1315	3.6	37
5 1330	3.6	38
6 1345	3.5	38
7 1400	3.6	38
8 1415	3.6	38

Test #3

Time	ΔP in H20	Temperature
Start 1515	3.5	38
1 1530	3.6	37
2 1545	3.6	36
3 1600	3.6	36
4 1615	3.5	36
5 1630	3.6	35
6 1645	3.6	34
7 1700	3.6	34
8 1715	3.6	34

Test #4

Time	ΔP in H20	Temperature
1		
2		
3		
4		
5		
6		
7		
8		

AMERICAN ENVIRONMENTAL TESTING, INCORPORATED
565 So. Birch Drive 801-266-7111
Spanish Fork, Utah 84660

Baghouse Information Sheet

Client: Chemstar Lime. Date: 2/15-93

Location: Bancroft, Idaho Manufacturer: Mikropul

Source: QC-230 Serial #: 910-414-H11

Test #1

Time	ΔP in H20	Temperature
Start 1100	3.8	17
1 1115	3.8	18
2 1130	3.8	17
3 1145	3.8	18
4 1200	3.8	17
5 1215	3.8	17
6 1230	3.8	17
7 1245	3.8	18
8 1300	3.8	18
1315	3.8	18

Test #2

Time	ΔP in H20	Temperature
Start 1345	3.8	18
1 1400	3.8	19
2 1415	3.8	20
3 1430	3.8	20
4 1445	3.8	20
5 1500	3.8	21
6 1515	3.8	22
7 1530	3.8	23
8 1545	3.8	23

Test #3

Time	ΔP in H20	Temperature
Start = 1615	3.8	22
1 1630	3.8	23
2 1645	3.8	24
3 1700	3.8	22
4 1715	3.8	21
5 1730	3.8	20
6 1745	3.8	20
7 1800	3.8	19
8 1815	3.8	17

Test #4

Time	ΔP in H20	Temperature
1		
2		
3		
4		
5		
6		
7		
8		

AMERICAN ENVIRONMENTAL TESTING, INCORPORATED
565 So. Birch Drive 801-266-7111
Spanish Fork, Utah 84660

Baghouse Information Sheet

Client: Chemstar Lime
Date: 2/15-93
Location: Bancroft, Idaho
Manufacturer: Fuller
Source: QC-316
Serial #: Model 448510

Test #1

Time	ΔP in H20	Temperature
A/B/C → Sections		20
1 1115	6.2/5.8/6.2	20
2 30	6.2/5.8/6.0	21
3 45	6.2/5.8/6.1	20
4 1200	6.2/5.8/6.1	19
5 15	6.2/5.8/6.1	18
6 30	0-0-0	19
7 45	6.2/5.8/6.1	20
8 1300	6.2/5.8/6.1	20

Test #2

Time	ΔP in H20	Temperature
A/B/C - sections		21
1 1400	6.2/5.8/6.1	22
2 15	6.2/5.8/6.1	22
3 30	6.2/5.8/6.1	23
4 45	6.2/0/0	23
5 1500	6.2/5.8/6.1	20
6 15	6.2/5.8/6.1	20
7 30	6.2/5.8/6.1	21
8 45	6.2/5.8/6.1	20

Test #3

Time	ΔP in H20	Temperature
A/B/C - Sections		22
1 1615	6.2/5.8/0	20
2 30	6.2/5.8/6.1	19
3 45	6.2/5.8/6.1	19
4 1700	6.2/5.8/6.1	19
5 15	6.2/5.8/6.1	18
6 30	6.2/5.8/6.1	18
7 45	6.2/5.8/6.1	17
8 1800	0 0 / 6.1	17

Test #4

Time	ΔP in H20	Temperature
1		
2		
3		
4		
5		
6		
7		
8		

D. Emission Data/Mass Flux Rates/Emission Factors

Test ID	Parameter	Units	Values reported			
			Run 1	Run 2	Run 3	Run 4
1	Stack temperature	Deg F	37.96	38.04	36.21	
Primary crushing stage	Moisture	%				
	Oxygen	%	20.9	20.9	20.9	
	Volumetric flow, actual	acfm				
	Volumetric flow, standard	dscfh	556280	557310	558640	
	Isokinetic variation	%	98.73	100.1	99.18	
Circle: Production or feed rate Capacity:		TPH	311	311	311	
	Pollutant concentrations:					
	Filterable PM	lb/dscf	2.284E-07	2.567E-07	2.151E-07	
	Pollutant mass flux rates:					
	Filterable PM	lb/hr	0.127	0.143	0.120	
	Emission factors:					
	Filterable PM	lb/ton	4.09E-04	4.60E-04	3.86E-04	4.18E-04

Test ID	Parameter	Units	Values reported			
			Run 1	Run 2	Run 3	Run 4
2	Stack temperature	Deg F	38.54	36.79	36.17	
Primary crushing and screening stage	Moisture	%				
	Oxygen	%	20.9	20.9	20.9	
	Volumetric flow, actual	acfm				
	Volumetric flow, standard	dscfh	802570	832670	806270	
	Isokinetic variation	%	93.57	95.02	93.88	
Circle: Production or feed rate Capacity:		TPH	311	311	311	
	Pollutant concentrations:					
	Filterable PM	lb/dscf	2.371E-07	2.009E-07	2.597E-07	
	Pollutant mass flux rates:					
	Filterable PM	lb/hr	0.190	0.167	0.209	
	Emission factors:					
	Filterable PM	lb/ton	6.12E-04	5.38E-04	6.73E-04	6.08E-04

Test ID	Parameter	Units	Values reported			
			Run 1	Run 2	Run 3	Run 4
3	Stack temperature	Deg F	39.75	41.67	40.54	
Conveyor transfer point	Moisture	%				
	Oxygen	%	20.9	20.9	20.9	
	Volumetric flow, actual	acfm				
	Volumetric flow, standard	dscfh	134720	133660	131550	
	Isokinetic variation	%	99.86	99.86	100.1	
Circle: Production or feed rate Capacity:		TPH	241	241	241	
	Pollutant concentrations:					
	Filterable PM	lb/dscf	1.414E-07	2.03E-07	1.127E-07	
	Pollutant mass flux rates:					
	Filterable PM	lb/hr	0.0191	0.0271	0.0148	
	Emission factors:					
	Filterable PM	lb/ton	7.91E-05	1.13E-04	6.15E-05	8.44E-05

Test ID	Parameter	Units	Values reported			
			Run 1	Run 2	Run 3	Run 4
4	Stack temperature	Deg F	40.5	39.08	35.58	
Conveyor transfer point	Moisture	%				
	Oxygen	%	20.9	20.9	20.9	
	Volumetric flow, actual	acfm				
	Volumetric flow, standard	dscfh	151350	152570	155790	
	Isokinetic variation	%	96.27	96.83	98.1	
Circle: Production or feed rate Capacity:		TPH	241	241	241	
	Pollutant concentrations:					
	Filterable PM	lb/dscf	2.573E-07	8.858E-08	9.117E-08	
	Pollutant mass flux rates:					
	Filterable PM	lb/hr	0.0389	0.0135	0.0142	
	Emission factors:					
	Filterable PM	lb/ton	1.62E-04	5.61E-05	5.89E-05	9.22E-05

Test ID	Parameter	Units	Values reported			
			Run 1	Run 2	Run 3	Run 4
5	Stack temperature	Deg F	31.21	25.04	26.29	
Secondary and tertiary screening stage	Moisture	%				
	Oxygen	%	20.9	20.9	20.9	
	Volumetric flow, actual	acfm				
	Volumetric flow, standard	dscfh	460300	476640	472950	
	Isokinetic variation	%	97.22	98.74	99.28	
Circle: Production or feed rate Capacity:		TPH	604	604	604	
	Pollutant concentrations:					
	Filterable PM	lb/dscf	1.744E-07	1.879E-07	1.165E-07	
	Pollutant mass flux rates:					
	Filterable PM	lb/hr	0.0803	0.0896	0.0551	
	Emission factors:					
	Filterable PM	lb/ton	1.33E-04	1.48E-04	9.12E-05	1.24E-04

Test ID	Parameter	Units	Values reported			
			Run 1	Run 2	Run 3	Run 4
6	Stack temperature	Deg F	38	38.5	40.54	
Kiln feed	Moisture	%				
	Oxygen	%	20.85	20.9	20.9	
	Volumetric flow, actual	acfm				
	Volumetric flow, standard	dscfh	44143	44296	44125	
	Isokinetic variation	%	97.58	97.72	98.18	
Circle: Production or feed rate Capacity:		TPH	594	594	594	
	Pollutant concentrations:					
	Filterable PM	lb/dscf	9.411E-08	5.07E-08	9.788E-08	
	Pollutant mass flux rates:					
	Filterable PM	lb/hr	0.00415	0.00225	0.00432	
	Emission factors:					
	Filterable PM	lb/ton	6.99E-06	3.78E-06	7.27E-06	6.02E-06

Test ID	Parameter	Units	Values reported			
			Run 1	Run 2	Run 3	Run 4
7	Stack temperature	Deg F	201.67	202.17	205.5	
Vertical lime kiln	Moisture	%				
	Oxygen	%	7.5	7.46	7.34	
	Volumetric flow, actual	acfm				
	Volumetric flow, standard	dscfh	2050300	2093600	2077500	
	Isokinetic variation	%	95.31	96.65	94.71	
Circle: Production or feed rate		TPH	25.17	25.17	25.17	
Capacity:						
	Pollutant concentrations:					
	Filterable PM	lb/dscf	6.449E-07	6.755E-07	5.317E-07	
	Sulfur dioxide	ppm	0.07	0.08	0.11	
	Nitrogen oxides	ppm	22.76	24.66	24.76	
	Carbon monoxide	ppm	68.95	78.88	76.87	
	Pollutant mass flux rates:					
	Filterable PM	lb/hr	1.322	1.414	1.105	
	Sulfur dioxide	lb/hr	0.02	0.03	0.04	
	Nitrogen oxides	lb/hr	5.57	6.16	6.14	
	Carbon monoxide	lb/hr	10.29	12.02	11.63	
	Emission factors:					
	Filterable PM	lb/ton	0.053	0.056	0.044	0.051
	Sulfur dioxide	lb/ton	0.00079	0.0012	0.0016	0.0012
	Nitrogen oxides	lb/ton	0.22	0.24	0.24	0.24
	Carbon monoxide	lb/ton	0.41	0.48	0.46	0.45

"EMISSIONS SURVEY CONDUCTED AT CHEMSTAR LIME COMPANY, LOCATED IN BANCROFT, IDAHO"

American Environmental Testing Company Inc.

801-266-7111

"EMISSIONS SURVEY CONDUCTED AT CHEMSTAR LIME COMPANY, LOCATED IN BANCROFT, IDAHO"

Principal Chemist:

V. Brent Benson

CEM Supervisor:

J. Paul Benson

EPA 5 Supervisors:

Greg E. Johnson
Brett A. Lindsay

Technicians:

Ryan B. Benson
Todd B. Benson
Rick P. Hawkin
Jason Robarge
J.D. Schiller
Brent Strong

Test Date: 2/12-15/93

Submittal Date: 2/26/93

Prepared for: Mr. Stewart Schasteen

Chemstar Lime Company
P.O. Box 88
Bancroft, Idaho 83217

Prepared by: Mr. V. Brent Benson, Technical Director

American Environmental Testing, Inc.
565 South Birch Drive
Spanish Fork, Utah 84660

CERTIFICATION OF REPORT INTEGRITY

AMERICAN ENVIRONMENTAL TESTING COMPANY, INC. (AET) certifies:

1. That every effort was made to obtain accurate and representative data within the guidelines established by:

   A. The Idaho Department of Environmental Quality Regulations.

   B. The U.S. Environmental Protection Agency Code of Federal Regulations (CFR) Title 40, Chapter I, Part 60, Appendix "A", Methods 1-5 inclusive, Method 6C, Method 7E, Method 9 and Method 10.

   C. The U.S. Environmental Protection Agency "Quality Assurance Handbook for Air Pollution Measurement Systems".

2. All sampling and analysis performed for the compliance test reported herein were carried out by myself or under my supervision.

3. The results obtained are accurate and authentic.

Brett A. Lindsay
Brett A. Lindsay
Method 5 Crew Supervisor

J. Paul Benson
J. Paul Benson
CEM Crew Supervisor

Greg E. Johnson
Greg E. Johnson
Method 5 Crew Supervisor

I have reviewed all testing details and methods on which the results of this test are based. I find them to be accurate within the limits of the applicable methods.

V. Brent Benson
V. Brent Benson
Technical Director

TABLE OF CONTENTS

Page #

1.0 Introduction

1.1 Test Purpose 1

1.1.1 Particulate Emission Limitations 2

2.0 Summary of Results

2.1 Particulate Emissions 4

2.1.1a Table of Particulate Emissions Summary - DC-120 4

2.1.1b Table of Particulate Emissions Summary - DC-123 5

2.1.1c Table of Particulate Emissions Summary - DC-126 5

2.1.1d Table of Particulate Emissions Summary - DC-129 6

2.1.1e Table of Particulate Emissions Summary - DC-230 6

2.1.1f Table of Particulate Emissions Summary - DC-303 7

2.1.1g Table of Particulate Emissions Summary - DC-316 7

2.2 SO_2 Emissions 8

2.2.1 SO_2 Emissions Summary - DC-316 8

2.3 NO_x Emissions 8

2.3.1 NO_x Emissions Summary - DC-316 9

2.4 CO Emissions 9

2.3.1 CO Emissions Summary - DC-316 9

2.5 Visible Emissions Opacity 10

2.5.1 Summary Table of Visible Emissions 10

3.0 Source Operation
3.1 General Plant Operations . . . . . .
3.1.2 Summary Table of Production Data 11

4.0 Sampling and Analysis Procedures
4.1 Emissions Testing 12
4.1.1 Figure of Stack Diagram
- DC-120 13
4.1.2 Table of Traverse Point Calculations
- DC-120 14
4.1.3 Figure of Stack Diagram
- DC-123 15
4.1.4 Table of Traverse Point Calculations
- DC-123 16
4.1.5 Figure of Stack Diagram
- DC-126 17
4.1.6 Table of Traverse Point Calculations
- DC-126 18
4.1.7 Figure of Stack Diagram
- DC-129 19
4.1.8 Table of Traverse Point Calculations
- DC-129 20
4.1.9 Figure of Stack Diagram
- DC-230 21
4.1.10 Table of Traverse Point Calculations
- DC-230 22
4.1.11 Figure of Stack Diagram
- DC-303 24
4.1.12 Table of Traverse Point Calculations
- DC-303 25
4.1.13 Figure of Stack Diagram
- DC-316 26
4.1.14 Table of Traverse Point Calculations
- DC-316 27
4.1.15 Summary Table of Field and Laboratory Data
- DC-120 28
4.1.16 Summary Table of Field and Laboratory Data
- DC-123 29
4.1.17 Summary Table of Field and Laboratory Data
- DC-126 30
4.1.18 Summary Table of Field and Laboratory Data
- DC-129 31

4.1.19 Summary Table of Field and Laboratory Data - DC-230 32
4.1.20 Summary Table of Field and Laboratory Data - DC-303 34
4.1.21 Summary Table of Field and Laboratory Data - DC-316 35
4.1.22 Summary Table of Calculated Results - DC-120 36
4.1.23 Summary Table of Calculated Results - DC-123 37
4.1.24 Summary Table of Calculated Results - DC-126 38
4.1.25 Summary Table of Calculated Results - DC-129 39
4.1.26 Summary Table of Calculated Results - DC-230 40
4.1.27 Summary Table of Calculated Results - DC-303 41
4.1.28 Summary Table of Calculated Results - DC-316 42
4.1.29 Figure of EPA Method 5 Sample Train. 43
4.1.30 Table of Average Cyclonic Flow Angles. 44
4.1.31 CEM Sample Train 47

5.0 Quality Control/Quality Assurance
5.1 Compliance Testing 48

APPENDICES

A. Operating Permit
B. AET Pretest Protocol
C. Production Data
D. Laboratory and Field Data
D-1. Gaseous Emissions Field Data
E. Emissions Calculations
F. Cyclonic Flow Determination
G. VEO's and Certifications
H. Calibration Data

"EMISSIONS SURVEY CONDUCTED AT CHEMSTAR LIME COMPANY, LOCATED IN BANCROFT, IDAHO"

1.0 Introduction

1.1 Test Purpose

The Idaho Department of Environmental Quality (IDEQ) issued the Chemstar Lime Company an "Operating Permit" to construct a Lime Quarry and Kiln near Soda Springs on June 24, 1991. (Operating Permit No. 0420-0029). A copy of the permit is attached in Appendix "A". In the permit, conditions were established for various pollutants emission levels, and criteria was set for testing to verify compliance with these limitations.

At the request of Chemstar Lime Company's, Mr. Stewart Schasteen, American Environmental Testing, Inc., (AET) conducted Particulate emission tests and visual emission observations on the following sources:

1. DC-120 Primary Crushing
2. DC-123 Primary Screening & Crushing
3. DC-126 Conveyor belt transfer (belt #1 to belt #2)
4. DC-129 Conveyor belt transfer (belt #2 to stacker belt)
5. DC-230 Secondary & Tertiary Screening
6. DC-303 Kiln Feed
7. DC-316 Vertical Lime Kiln

All of the above sources with the exception of the DC-316 fall under New Source Performance Standards (NSPS) regulations (40 CFR Part 60 subpart 000) accordingly Particulate emission tests for these sources (except the Vertical Lime Kiln DC-316) were conducted using three each, 2 hour test runs. Visual emission observations consisted of one 3 hour observation for each source. Particulate emission tests on the Vertical Lime Kiln DC-316 were conducted using three, 1 hour test runs. Visual emission observations consisted of three, 6-minute observations.

Particulate emission limitations listed in Appendix "A" of the "Operating Permit" for the above sources are shown in Table 1.1.1.

Table 1.1.1

(Particulate Emission Limitations)

Source Description	Emission Limits	
	lbs/hr	tons/yr
DC-120 Primary Crushing	0.412	0.358
DC-123 Primary Screening & Crushing	0.476	0.419
DC-126 Conveyor belt transfer (belt #1 to belt #2)	0.03	0.027
DC-129 Conveyor belt transfer (belt #2 to stacker belt)	0.03	0.027
DC-230 Secondary & Tertiary Screening	0.108	0.44
DC-303 Kiln Feed	0.006	0.026
DC-316 Vertical Lime Kiln	2.0	8.064

In the "Operating Permit", VEO's are limited to 7% opacity for the DC-120, DC-123, DC-126, DC-129, DC-230 and the DC-303. VEO's are limited to 20% opacity for the DC-316.

Carbon Monoxide (CO), Nitric Oxides (NO_x) and Sulfur Dioxide (SO_2) emission tests were run on the DC-316. In the "Operating Permit" for the DC-316, CO emission limits are set at 2.5 lbs/hr and 10.1 tons/yr, NO_x emission limits are set at 8.1 lbs/hr and 32.7 tons/yr and SO_2 emission limits are set at 1.6 lbs/hr and 5.5 tons/yr.

Chemstar Lime Company's, Mr. Stewart Schasteen, requested that American Environmental Testing Company, Inc. prepare a "Pretest Protocol" to submit to the IDEQ outlining the required tests. The

protocol, without the calibration data is presented in Appendix "B".

To evaluate compliance with the stipulated permit conditions AET performed emissions testing as set forth in the Code of Federal Regulations (CFR), Title 40, Chapter I, Part 60, Appendix "A". The following methods were used to obtain compliance:

Method 1 - "Sample and Velocity Traverses for Stationary Sources"

Method 2 - "Determination of Stack Gas Velocity and Volumetric Flow Rate (type "S" pitot tube)"

Method 3 - "Gas Analysis for Carbon Dioxide, Oxygen, Excess Air and Dry Molecular Weight"

Method 4 - "Determination of Moisture Content in Stack Gases"

Method 5 - "Determination of Particulate Emissions from Stationary Sources"

Method 6C - "Determination of Sulfur Dioxide Emissions from Stationary Sources" (Instrumental Analyzer Procedures)

Method 7E - "Determination of Nitrogen Oxides Emissions from Stationary Sources" (Instrumental Analyzer Procedures)

Method 9 - "Determination of Visible Opacity from Stationary Sources"

Method 10 - "Determination of Carbon Monoxide Emissions from Stationary Sources (Instrumental Analyzer Procedures)

2.0 Summary of Results

2.1 Particulate Emissions (EPA 5)

The emissions data accumulated for particulate matter during the February 12-15, 1993 compliance tests are summarized in Table 2.1.1a - 2.1.1g for the DC-120, DC-123, DC-126, DC-129, DC-230, DC-303 and the DC-316.

Table 2.1.1a

(Particulate Emissions Summary)

DC-120

Test Run	DSCF Collected	Emissions Rates	
		Lbs/hr	gr/dscf
1	65.6375	0.0042	0.0007
2	66.9964	0.0022	0.0004
3	65.5825	0.0043	0.0007
Average =	66.0721	0.0036	0.0006

The average measured particulate emission concentration of the DC-120 was 0.0036 lbs/hr, which is 0.8738% of the IDEQ permitted allowable ceiling of 0.412 lbs/hr.

Table 2.1.1b

(Particulate Emissions Summary)

DC-123

Test Run	DSCF Collected	Emissions Rates	
		Lbs/hr	gr/dscf
1	66.9516	0.1903	0.0017
2	70.2415	0.1673	0.0014
3	66.2167	0.2094	0.0018
Average =	67.8033	0.189	0.0016

The average measured particulate emission concentration of the DC-123 was 0.189 lbs/hr, which is 39.706% of the IDEQ permitted allowable ceiling of 0.476 lbs/hr.

Table 2.1.1c

(Particulate Emissions Summary)

DC-126

Test Run	DSCF Collected	Emissions Rates	
		Lbs/hr	gr/dscf
1	65.4746	0.0191	0.0010
2	65.1539	0.0271	0.0014
3	64.5392	0.0148	0.0008
Average =	65.0559	0.0203	0.0011

The average measured particulate emission concentration of the DC-126 was 0.0203 lbs/hr, which is 67.67% of the IDEQ permitted allowable ceiling of 0.03 lbs/hr.

Table 2.1.1d

(Particulate Emissions Summary)

DC-129

Test Run	DSCF Collected	Emissions Rates	
		Lbs/hr	gr/dscf
1	71.1291	0.0389	0.0018
2	72.1750	0.0135	0.0006
3	74.9590	0.0142	0.0006
Average =	72.7544	0.0222	0.0003

The average measured particulate emission concentration of the DC-129 was 0.0222 lbs/hr, which is 7.4% of the IDEQ permitted allowable ceiling of 0.3 lbs/hr.

Table 2.1.1e

(Particulate Emissions Summary)

DC-230

Test Run	DSCF Collected	Emissions Rates	
		Lbs/hr	gr/dscf
1	67.0058	0.0803	0.0012
2	70.3895	0.0896	0.0013
3	70.0002	0.0551	0.0008
Average =	69.1318	0.075	0.0011

The average measured particulate emission concentration of the DC-230 was 0.075 lbs/hr, which is 69.44% of the IDEQ permitted allowable ceiling of 0.108 lbs/hr.

Table 2.1.1f

(Particulate Emissions Summary)

DC-303

Test Run	DSCF Collected	Emissions Rates	
		Lbs/hr	gr/dscf
1	86.6718	0.0042	0.0007
2	86.9662	0.0022	0.0004
3	87.8457	0.0043	0.0007
Average =	87.1612	0.0036	0.0006

The average measured particulate emission concentration of the DC-303 was 0.0036 lbs/hr, which is 60% of the IDEQ permitted allowable ceiling of 0.006 lbs/hr.

Table 2.1.1g

(Particulate Emissions Summary)

DC-316

Test Run	DSCF Collected	Emissions Rates	
		Lbs/hr	gr/dscf
1	30.7685	1.3221	0.0045
2	31.3295	1.4143	0.0047
3	30.2692	1.1046	0.0037
Average =	30.7891	1.2803	0.0043

The average measured particulate emission concentration of the DC-316 was 1.2803 lbs/hr, which is 64.015% of the IDEQ permitted allowable ceiling of 2.0 lbs/hr.

2.2 SO_2 Emissions (EPA 6C)

The emissions data accumulated for SO_2 during the February 15, 1993 compliance tests are summarized in Table 2.2.1 for the DC-316 exhaust stack.

Table 2.2.1

(SO_2 Emissions Summary)

DC-316

Test Run	Emissions Rates	
	ppm	lbs/hr
1	0.07	0.02
2	0.08	0.03
3	0.11	0.04
Average =	0.09	0.03

The average measured SO_2 emission concentration for the DC-316 exhaust stack was 0.03 lbs/hr which is 1.88% of the IDEQ permitted allowable ceiling of 1.6 lbs/hr.

2.3 NO_x Emissions (EPA 7E)

The emissions data accumulated for NO_x during the February 15, 1993 compliance tests are summarized in Table 2.3.1 for the DC-316 exhaust stack.

Table 2.3.1

(NO_x Emissions Summary)

DC-316

Test Run	Emissions Rates	
	ppm	lbs/hr
1	22.76	5.57
2	24.66	6.16
3	24.76	6.14
Average =	24.06	5.96

The average measured NO_x emission concentration for the DC-316 exhaust stack was 5.96 lbs/hr, which is 73.58% of the IDEQ permitted allowable ceiling of 8.1 lbs/hr.

2.4 Carbon Monoxide (EPA 10)

The emissions data accumulated for CO during the February 15, 1993 compliance tests are summarized in Table 2.4.1 for the DC-316 exhaust stack.

Table 2.4.1

(CO Emissions Summary)

DC-316

Test Run	Emissions Rates	
	ppm	lbs/hr
1	68.95	10.29
2	78.88	12.02
3	76.87	11.63
Average =	74.9	11.31

The average measured CO emission concentration for the DC-316 exhaust stack was 11.31 lbs/hr, which is 452.4% of the IDEQ permitted allowable ceiling of 2.5 lbs/hr.

2.5 Visible Emission Opacity (VEO) (EPA 9)

VEO's consisted of one 3 hour observations for the DC-120, DC-123, DC-126, DC-129, DC-230 and the DC-303. VEO's for the DC-316 consisted of three 6 minute observations. Averages for each source are given in Table 2.5.1.

Table 2.5.1

(Visible Emissions Opacity Summary)

Source	%VEO
DC-120	0
DC-123	0
DC-126	0
DC-129	0
DC-230	0
DC-303	0
DC-316	0.90

The average VEO reading was 0% for the DC-120, DC-123, DC-126, DC-129, DC-230 and the DC-303. This is well below the IDEQ VEO limitation of 7% for these sources. The average VEO reading was 0.90% for the DC-316, which is well below the IDEQ VEO limitation of 20% for this source.

3.0 Source Operations

3.1 General Plant Operations

Chemstar Lime uses a contract mining firm (Conda, Inc.) to supply limestone from a quarry located approximately one mile north east of its Tenmile Plant near Bancroft Idaho. The limestone is transported from the quarry to the size reduction equipment via truck (@ 50 tons each).

Size reduction is effected by primary and seconday crushers. The crushed material after size classification is accomplished using standard screening processes is fed into one of two Parallel Flow Regenerative Lime Kilns where the limestone is converted to lime.

Production rates during the testing period were reported to AET by Chemstar Lime's, Mr. Stewart Schasteen. The average production rate during the testing period for each of the individual sources are summarized in Table 3.1.1. Production Data is included in Appendix "C".

Table 3.1.1

(Production Rates)

Source	Test Date	Average Production Rate/TPH
1. DC-120	2/12/93	311
2. DC-123	2/12/93	311
3. DC-126	2/13/93	241
4. DC-129	2/13/93	241
5. DC-230	2/15/93	604
6. DC-303	2/14/93	594
7. DC-316	2/15/93	604 TPD

Pressure drops across each of the baghouses during the testing period were recorded every 15 minutes. Those readings are included in Appendix "C".

4.0 Sampling and Analysis Procedures

4.1 Emissions Testing

A. EPA Method1; sample and velocity traverses for stationary sources.

Figure 4.1.1 is a diagram of the DC-120 Stack. The reference methods require the testor, due to the stack geometry, to sample for particulate and velocity at twenty-four (24) separate locations in the stack, twelve (12) per traverse, on diameter lines 90° apart from one another. The location of these points relative to the stack are given in Table 4.1.2.

Figure 4.1.3 is a diagram of the DC-123 Stack. The reference methods require the testor, due to the stack geometry, to sample for particulate and velocity at twenty-four (24) separate locations in the stack, twelve (12) per traverse, on diameter lines 90° apart from one another. The location of these points relative to the stack are given in Table 4.1.4.

Figure 4.1.5 is a diagram of the DC-126 Stack. The reference methods require the testor, due to the stack geometry, to sample for particulate and velocity at twenty-four (24) separate locations in the stack, twelve (12) per traverse, on diameter lines 90° apart from one another. The location of these points relative to the stack are given in Table 4.1.6.

Figure 4.1.7 is a diagram of the DC-129 Stack. The reference methods require the testor, due to the stack geometry, to sample for particulate and velocity at twelve (12) separate locations in the stack, six (6) per traverse, on diameter lines 90° apart from one another. The location of these points relative to the stack are given in Table 4.1.8.

Figure 4.1.9 is a diagram of the DC-230 Stack. The reference methods require the testor, due to the stack geometry, to sample for particulate and velocity at twenty-four (24) separate locations per stack, twelve (12) per traverse, on diameter lines 90° apart from one another. The location of these points relative to the stacks are given in Table 4.1.10.

Figure
4.1.1

Chemstar Lime
Location: DC-120

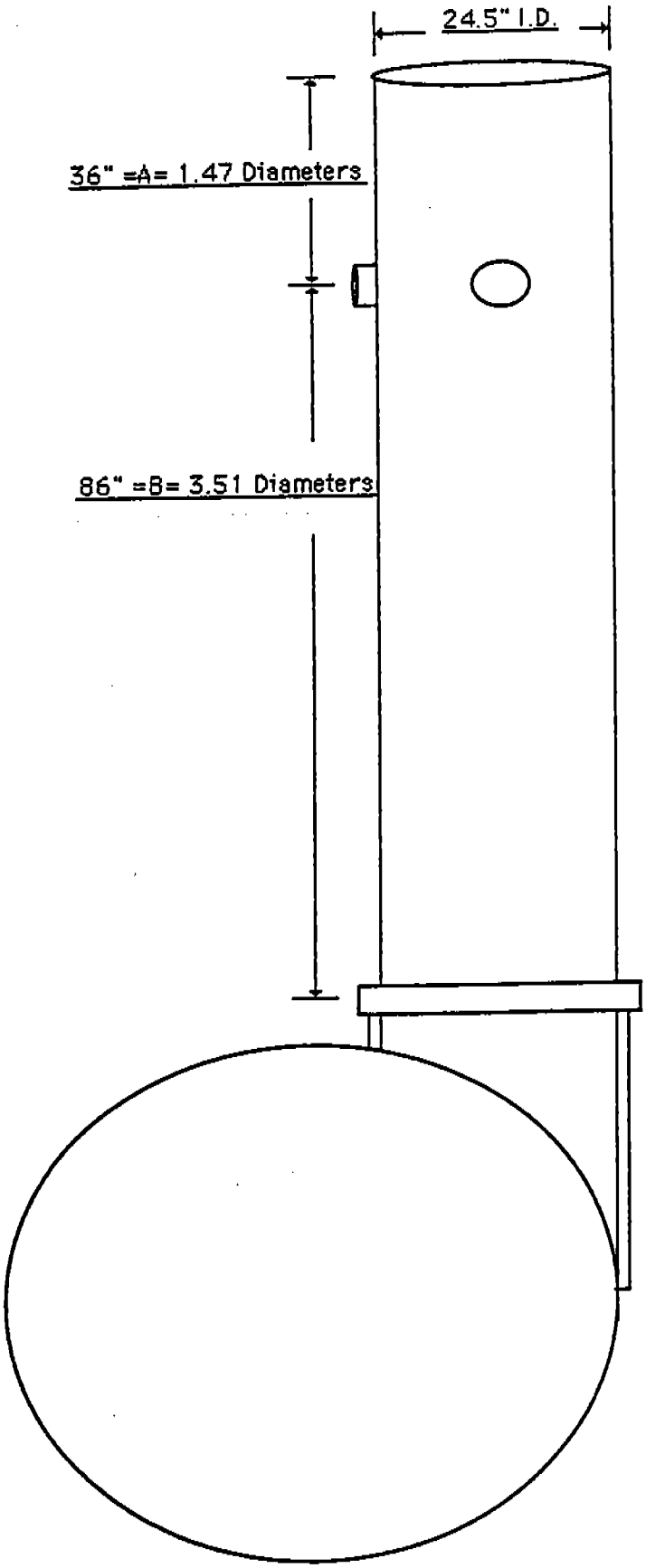

AMERICAN ENVIRONMENTAL TESTING, INCORPORATED
565 So. Birch Drive 801-266-7111
Spanish Fork, Utah 84660

Table 4.1.2

TRAVERSE POINT CALCULATIONS

Plant: Chemstar Lime - Ten Mile Plant
Date: 2/12/93
Sampling Location: DC-120
Inside of far wall to outside of
port (distance, X) 29.25"
Inside of near wall to outside of
port (distance, Y) 4.75"
Stack I.D. 24.5" = 3.273 ft squared

Traverse Point Number	Percent of Stack I.D.	Stack I.D. inches	Product of col. 2 &3 (to 1/8 in)	Distance Y	Traverse Point Location from outside of ports (sum of columns 4 & 5)
1 & 13	2.1	24.5	0.515	4.75"	5.75 = 5 3/4"
2 & 14	6.7	24.5	1.642	4.75"	6.392 = 6 3/8"
3 & 15	11.8	24.5	2.891	4.75"	7.641 = 7 5/8"
4 & 16	17.7	24.5	4.337	4.75"	9.087 = 9 1/8"
5 & 17	25	24.5	6.125	4.75"	10.875 = 10 7/8"
6 & 18	35.6	24.5	8.722	4.75"	13.472 = 13 1/2"
7 & 19	64.4	24.5	15.778	4.75"	20.528 = 20 1/2"
8 & 20	75	24.5	18.375	4.75"	23.125 = 23 1/8"
9 & 21	82.3	24.5	20.164	4.75"	24.914 = 24 7/8"
10 & 22	88.6	24.5	21.707	4.75"	26.359 = 26 3/8"
11 & 23	93.3	24.5	22.859	4.75"	27.609 = 27 5/8"
12 & 24	97.9	24.5	23.986	4.75"	28.250 = 28 1/8"

Figure
4.1.3

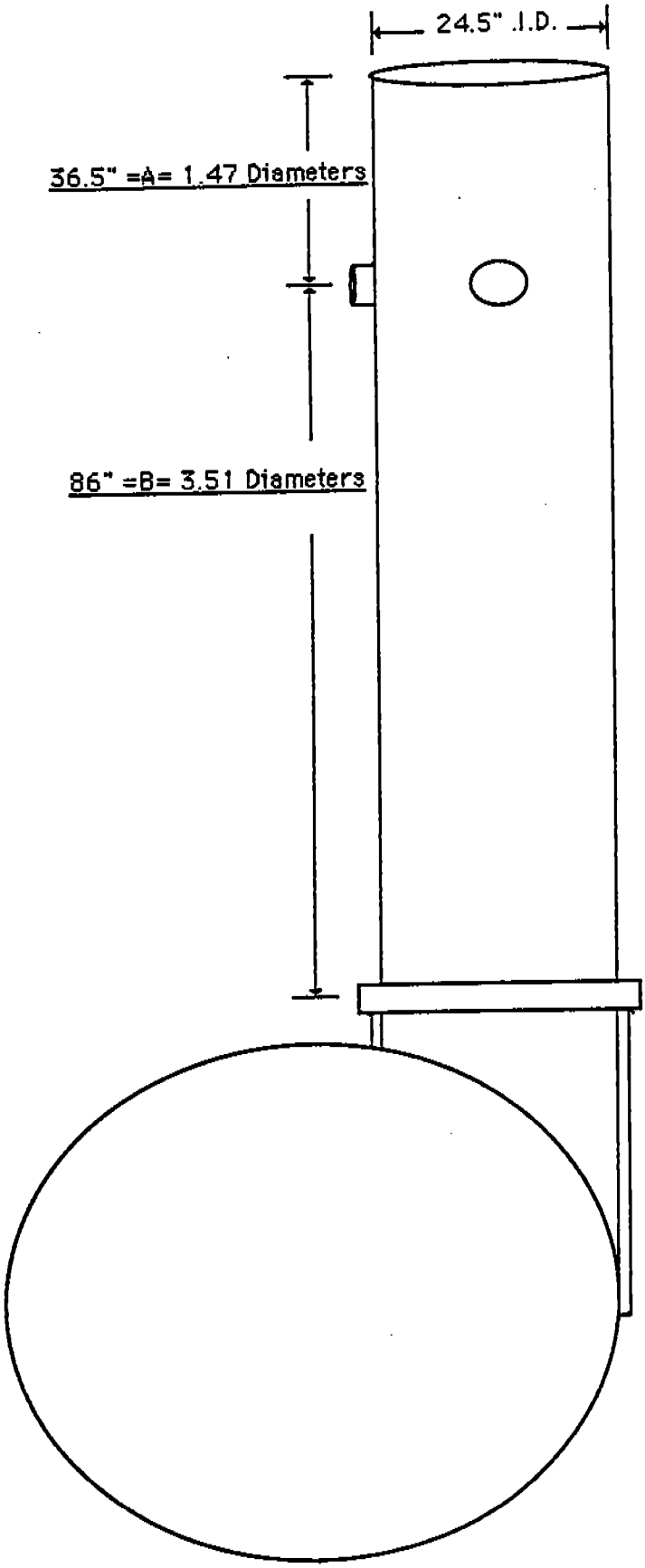

AMERICAN ENVIRONMENTAL TESTING, INCORPORATED
565 So. Birch Drive 801-266-7111
Spanish Fork, Utah 84660

Table 4.1.4

TRAVERSE POINT CALCULATIONS

Plant: Chemstar Lime - Ten Mile Plant
Date: 2/12/93
Sampling Location: DC-123
Inside of far wall to outside of
port (distance, X) 33.25"
Inside of near wall to outside of
port (distance, Y) 5.25"
Stack I.D. 28" = 4.276 ft squared

Traverse Point Number	Percent of Stack I.D.	Stack I.D. inches	Product of col. 2 &3 (to 1/8 in)	Distance Y	Traverse Point Location from outside of ports (sum of columns 4 & 5)
1 & 13	2.1	28	0.588	5.25"	6.25 = 6 1/4"
2 & 14	6.7	28	1.876	5.25"	7.126 = 7 1/8"
3 & 15	11.8	28	3.304	5.25"	8.554 = 8 1/2"
4 & 16	17.7	28	4.956	5.25"	10.206 = 10 1/4"
5 & 17	25	28	7.000	5.25"	12.250 = 12 1/4"
6 & 18	35.6	28	9.968	5.25"	15.218 = 15 1/4"
7 & 19	64.4	28	18.032	5.25"	23.282 = 23 1/4"
8 & 20	75	28	21.000	5.25"	26.25 = 26 1/4"
9 & 21	82.3	28	23.044	5.25"	28.294 = 29 1/4"
10 & 22	88.6	28	24.808	5.25"	29.946 = 30"
11 & 23	93.3	28	26.124	5.25"	31.374 = 31 3/8"
12 & 24	97.9	28	27.412	5.25"	32.250 = 32 1/4"

Figure
4.1.5

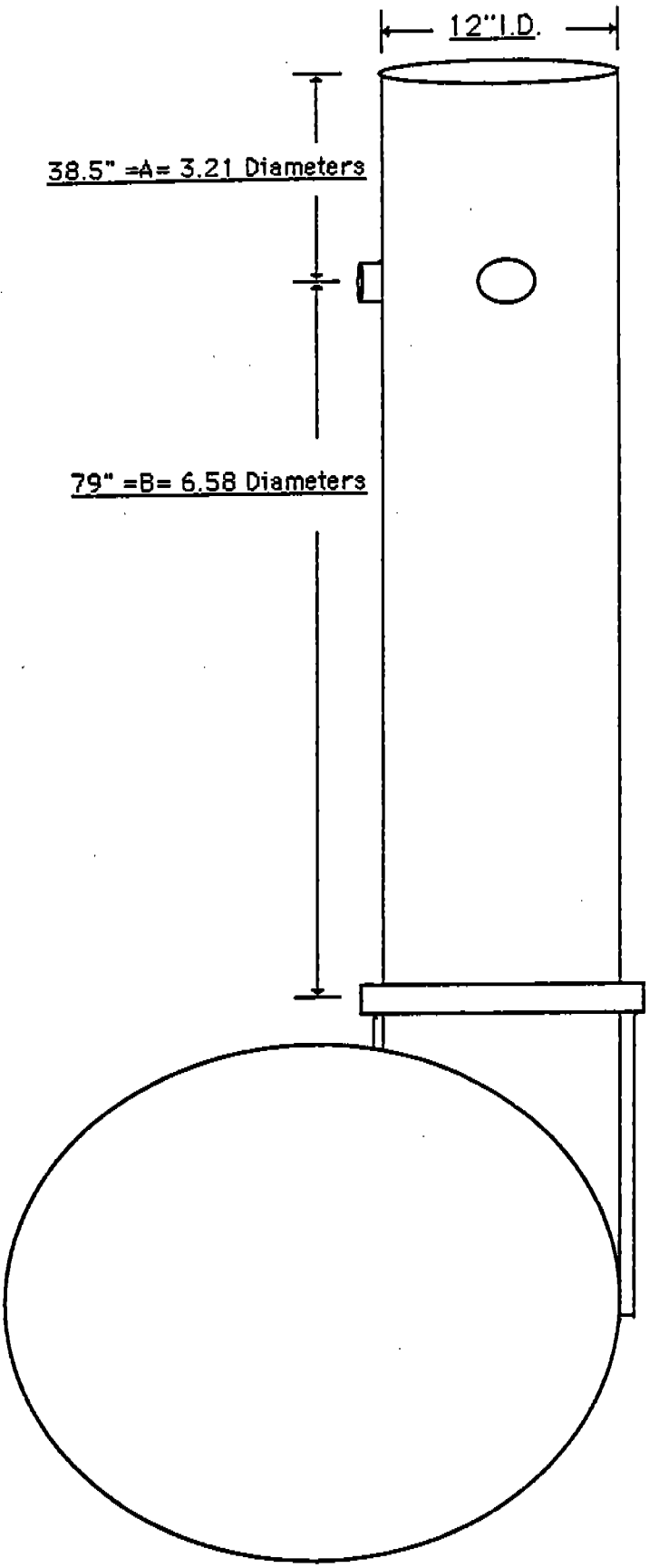

AMERICAN ENVIRONMENTAL TESTING, INCORPORATED
565 So. Birch Drive 801-266-7111
Spanish Fork, Utah 84660

Table 4.1.6

TRAVERSE POINT CALCULATIONS

Plant: Chemstar Lime - Ten Mile Plant
Date: 2/13/93
Sampling Location: DC-126
Inside of far wall to outside of
port (distance, X) 16.5"
Inside of near wall to outside of
port (distance, Y) 4.5"
Stack I.D. 12" = .785 ft squared

Traverse Point Number	Percent of Stack I.D.	Stack I.D. inches	Product of col. 2 &3 (to 1/8 in)	Distance Y	Traverse Point Location from outside of ports (sum of columns 4 & 5)
1 & 13	2.1	12	0.252	4.5"	5.0 = 5"
2 & 14	6.7	12	0.804	4.5"	5.304 = 5 1/4"
3 & 15	11.8	12	1.416	4.5"	5.916 = 5 1/8"
4 & 16	17.7	12	2.124	4.5"	6.624 = 6 5/8"
5 & 17	25	12	3.000	4.5"	7.5 = 7 1/2"
6 & 18	35.6	12	4.272	4.5"	8.772 = 8 3/4"
7 & 19	64.4	12	7.728	4.5"	12.228 = 12 1/4"
8 & 20	75	12	9.000	4.5"	13.5 = 13 1/2"
9 & 21	82.3	12	9.876	4.5"	14.376 = 14 3/8"
10 & 22	88.6	12	10.632	4.5"	15.084 = 15 1/8"
11 & 23	93.3	12	11.196	4.5"	15.696 = 15 3/4"
12 & 24	97.9	12	11.748	4.5"	16 = 16"

Figure
4.1.7

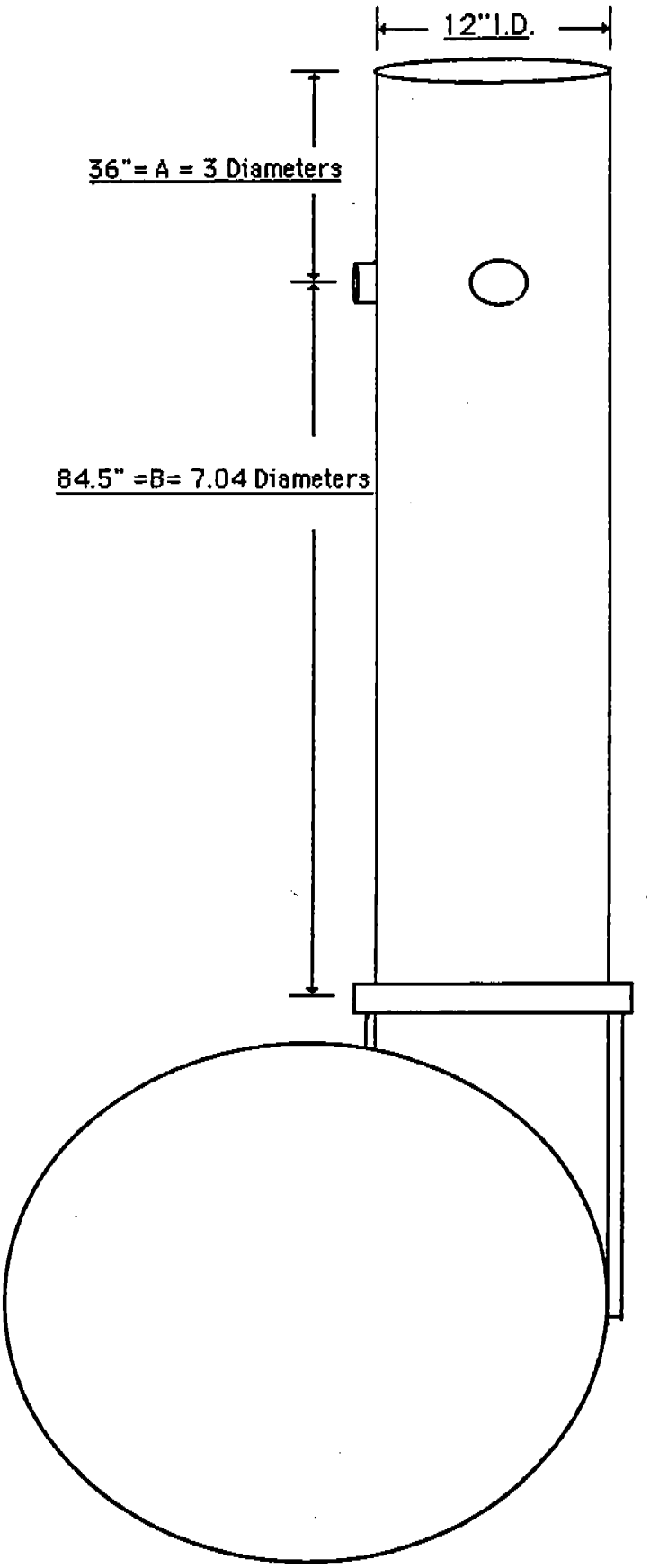

AMERICAN ENVIRONMENTAL TESTING, INCORPORATED
565 So. Birch Drive 801-266-7111
Spanish Fork, Utah 84660

Table 4.1.8

TRAVERSE POINT CALCULATIONS

Plant: Chemstar Lime - Ten Mile Plant
Date: 2/13/93
Sampling Location: DC-129
Inside of far wall to outside of
port (distance, X) 16.75"
Inside of near wall to outside of
port (distance, Y) 4.75"
Stack I.D. 12" = .785 ft squared

Traverse Point Number	Percent of Stack I.D.	Stack I.D. inches	Product of col. 2 &3 (to 1/8 in)	Distance Y	Traverse Point Location from outside of ports (sum of columns 4 & 5)
1 & 7	4.4	12	0.528	4.75"	5.278 = 5 1/4"
2 & 8	14.6	12	1.752	4.75"	6.502 = 6 1/2"
3 & 9	29.6	12	3.552	4.75"	8.302 = 8 1/4"
4 & 10	70.4	12	8.448	4.75"	13.198 = 13 1/8"
5 & 11	85.4	12	10.248	4.75"	14.998 = 15"
6 & 12	95.6	12	11.472	4.75"	16.222 = 16 1/4"

Figure 4.1.9

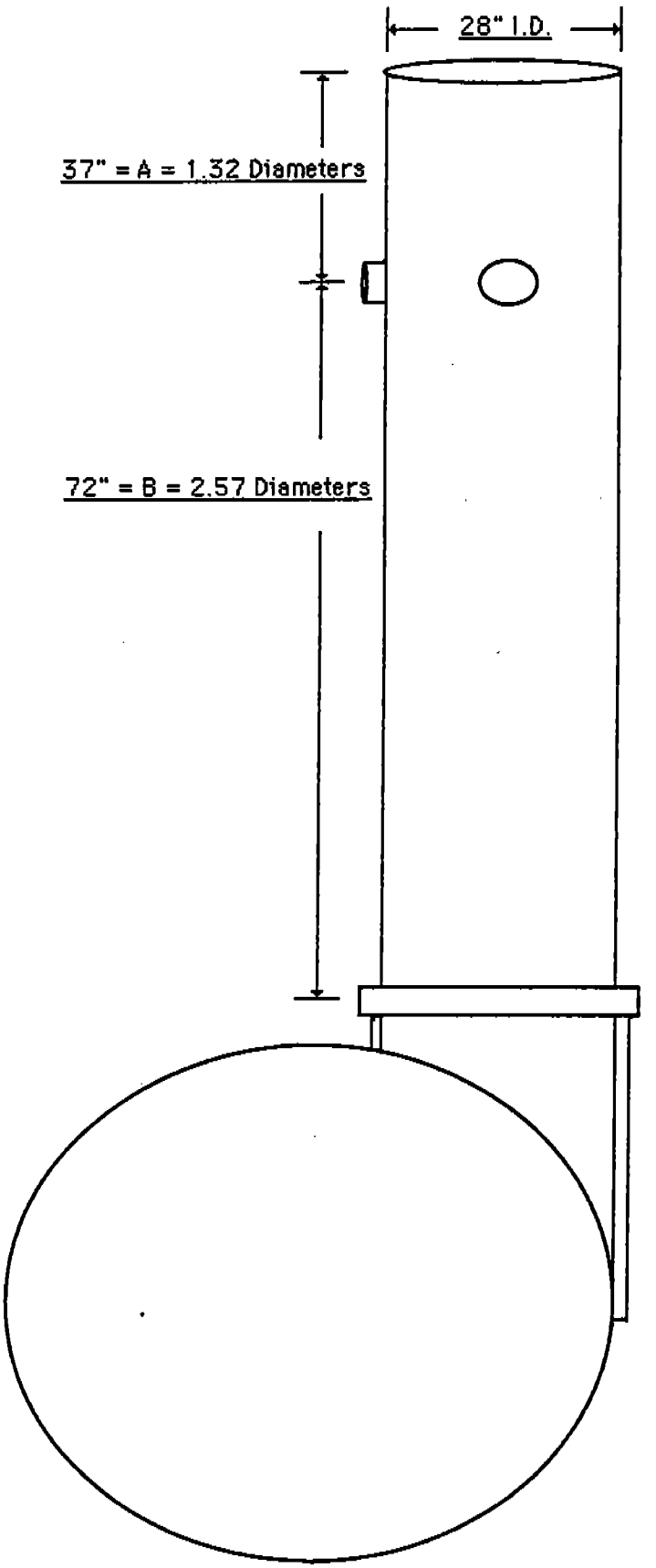

AMERICAN ENVIRONMENTAL TESTING, INCORPORATED
565 So. Birch Drive 801-266-7111
Spanish Fork, Utah 84660

Table 4.1.10

TRAVERSE POINT CALCULATIONS

Plant: Chemstar Lime - Ten Mile Plant
Date: 2/15/93
Sampling Location: DC-230
Inside of far wall to outside of
port (distance, X) 33"
Inside of near wall to outside of
port (distance, Y) 5"
Stack I.D. 28" = 4.276 ft squared

Traverse Point Number	Percent of Stack I.D.	Stack I.D. inches	Product of col. 2 &3 (to 1/8 in)	Distance Y	Traverse Point Location from outside of ports (sum of columns 4 & 5)
1 & 13	2.1	28	0.588	5"	6 = 6"
2 & 14	6.7	28	1.876	5"	6.876 = 6 7/8"
3 & 15	11.8	28	3.304	5"	8.304 = 8 1/4"
4 & 16	17.7	28	4.956	5"	9.956 = 10"
5 & 17	25	28	7.000	5"	12 = 12"
6 & 18	35.6	28	9.968	5"	14.968 = 15"
7 & 19	64.4	28	18.032	5"	23.032 = 23"
8 & 20	75	28	21.000	5"	26 = 26"
9 & 21	82.3	28	23.044	5"	28.044 = 28"
10 & 22	88.6	28	24.808	5"	29.696 = 29 3/4"
11 & 23	93.3	28	26.124	5"	31.124 = 31 1/8"
12 & 24	97.9	28	27.412	5"	32 = 32"

Figure 4.1.11 is a diagram of the DC-303 Stack. The reference methods require the testor, due to the stack geometry, to sample for particulate and velocity at eight (8) separate locations in the stack, four (4) per traverse, on diameter lines 90° apart from one another. The location of these points relative to the stack are given in Table 4.1.12.

Figure 4.1.13 is a diagram of the DC-316 Stack. The reference methods require the testor, due to the stack geometry, to sample for particulate and velocity at twenty-four (24) separate locations in the stack, twelve (12) per traverse, on diameter lines 90° apart from one another. The location of these points relative to the stack are given in Table 4.1.14.

B. EPA Method 3; for gas analysis of carbon dioxide, oxygen, excess air, and dry molecular weight.

This reference method requires that a gas sample be extracted from the stack for analysis concurrently with each of the three (3) EPA Method 5 runs. The integrated gas sample is then analyzed via an orsat for carbon monoxide, carbon dioxide and oxygen. The nitrogen value is obtained by difference.

Results from these determinations are included in Appendix "D" with the field and laboratory data forms for each individual source.

C. EPA Method 2 and 5 Combined; for the determination of velocity, particulate matter and volumetric flow rate from stationary sources.

To evaluate compliance with the particulate limitation specified in the "Operating Permit", AET had to test using methodology consistent with EPA Methods 2 and 5. Data from the three (3) separate runs, which constitute a single compliance test are summarized in the following tables for each source (Field and Laboratory Summary):

Table 4.1.15	DC-120
Table 4.1.16	DC-123
Table 4.1.17	DC-126
Table 4.1.18	DC-129
Table 4.1.19	DC-230

Figure 4.1.11

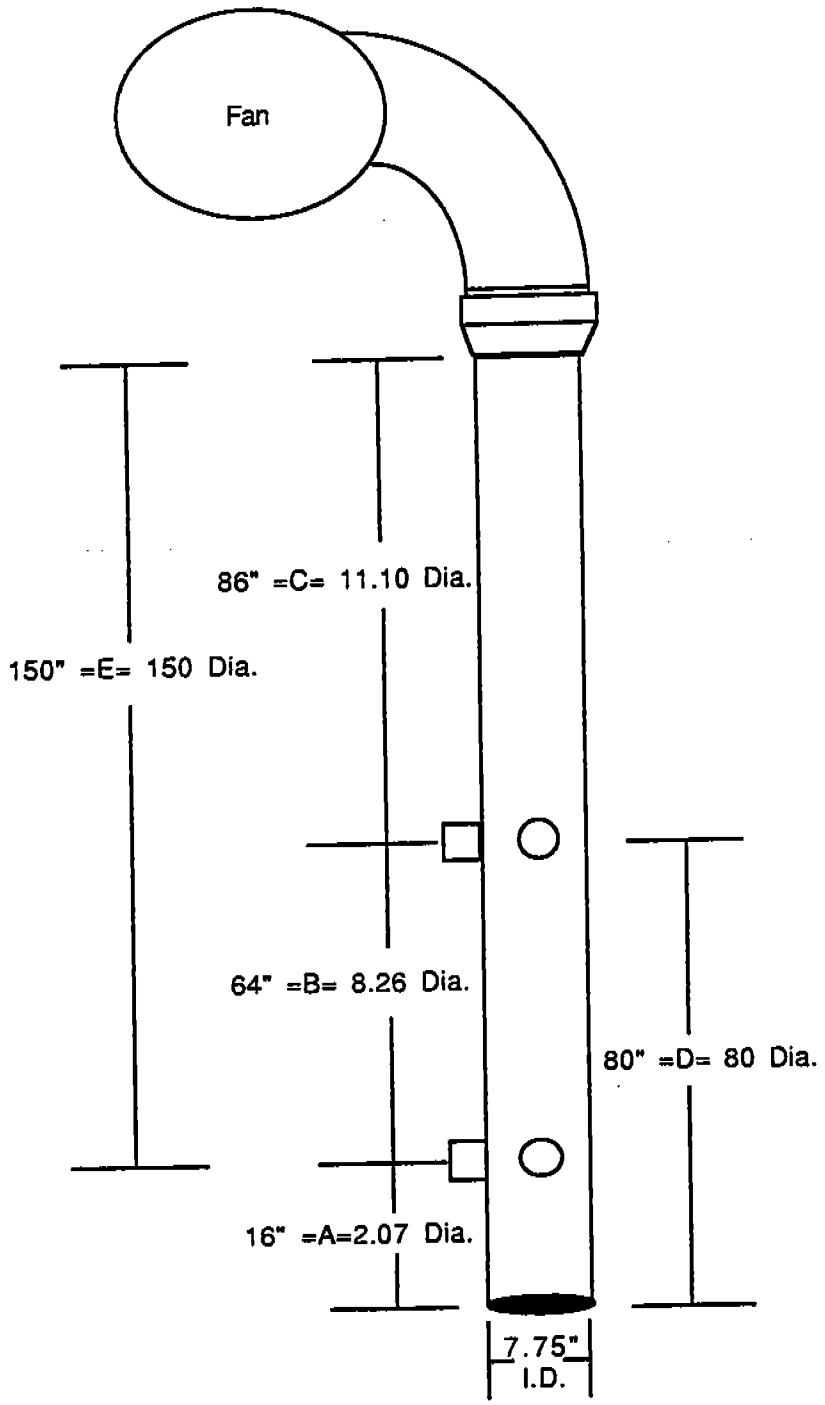
Fan
86" =C= 11.10 Dia.
150" =E= 150 Dia.
64" =B= 8.26 Dia.
80" =D= 80 Dia.
16" =A=2.07 Dia.
7.75"
I.D.

AMERICAN ENVIRONMENTAL TESTING, INCORPORATED
565 So. Birch Drive 801-266-7111
Spanish Fork, Utah 84660

Table 4.1.12

TRAVERSE POINT CALCULATIONS

Plant: Chemstar Lime - Ten Mile Plant
Date: 2/14/93
Sampling Location: DC-303
Inside of far wall to outside of
port (distance, X) 10.75"
Inside of near wall to outside of
port (distance, Y) 3"
Stack I.D. 7.75" = .328 ft squared

Traverse Point Number	Percent of Stack I.D.	Stack I.D. inches	Product of col. 2 &3 (to 1/8 in)	Distance Y	Traverse Point Location from outside of ports (sum of columns 4 & 5)
1 & 5	6.7	7.75	0.519	3"	3.519 = 3 1/2"
2 & 6	25	7.75	1.938	3"	4.938 = 5"
3 & 7	75	7.75	5.813	3"	8.813 = 8 7/8"
4 & 8	93.3	7.75	7.231	3"	10.231 = 10 1/4"

Figure 4.1.13

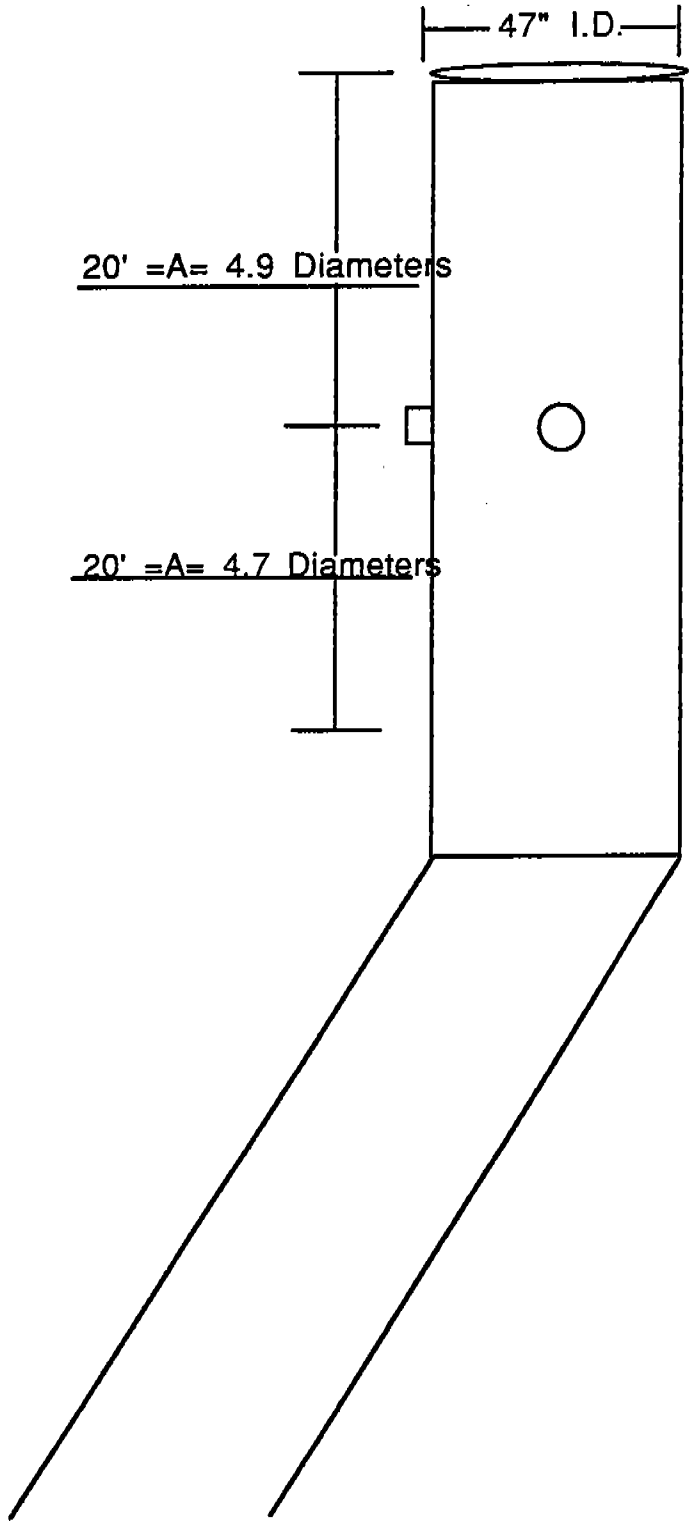

AMERICAN ENVIRONMENTAL TESTING, INCORPORATED
565 So. Birch Drive 801-266-7111
Spanish Fork, Utah 84660

Table 4.1.14

TRAVERSE POINT CALCULATIONS

Plant: Chemstar Lime - Ten Mile Plant
Date: 2/15/93
Sampling Location: DC-316
Inside of far wall to outside of
port (distance, X) 53.5"
Inside of near wall to outside of
port (distance, Y) 6.5"
Stack I.D. 47" = 12.048 ft squared

Traverse Point Number	Percent of Stack I.D.	Stack I.D. inches	Product of col. 2 &3 (to 1/8 in)	Distance Y	Traverse Point Location from outside of ports (sum of columns 4 & 5)
1 & 13	2.1	47	0.987	6.5"	7.5 = 7 1/2"
2 & 14	6.7	47	3.149	6.5"	9.649 = 9 5/8"
3 & 15	11.8	47	5.546	6.5"	12.046 = 12"
4 & 16	17.7	47	8.319	6.5"	14.819 = 14 7/8"
5 & 17	25	47	11.750	6.5"	18.25 = 18 1/4"
6 & 18	35.6	47	16.732	6.5"	23.236 = 23 1/4"
7 & 19	64.4	47	30.268	6.5"	36.768 = 36 3/4"
8 & 20	75	47	35.250	6.5"	41.75 = 41 3/4"
9 & 21	82.3	47	38.681	6.5"	45.181 = 45 1/8"
10 & 22	88.6	47	41.642	6.5"	47.954 = 48"
11 & 23	93.3	47	43.851	6.5"	50.351 = 50 3/8"
12 & 24	97.9	47	46.013	6.5"	52.513 = 52 1/2"

AMERICAN ENVIRONMENTAL TESTING, INCORPORATED
565 So. Birch Drive 801-266-7111
Spanish Fork, Utah 84660

TABLE 4.1.15
(FIELD AND LABORATORY DATA SUMMARY)

Plant : Chemstar Lime
Source: DC-120
Type : EPA Method #5
Date : 2/12/93

Symbol	Description	Units	Test #1	Test #2	Test #3
Vm	Volume dry gas sampled @ meter conditions	Ft3	88.458	90.247	88.198
		lso	88.635	90.427	88.374
Pb	Barometric Pres	"Hg abs	23.4	23.41	23.45
ΔH	Average Pres drop across the orifice meter	"H2O	1.3565	1.3704	1.3496
Tm	Average gas meter temp	°R	550.54	553.25	545.28
		°F	90.54	93.25	85.28
Yi	Meter Coefficient		1.002	1.002	1.002
Vw	Total H2O collected, impingers & silica gel	mls	6.2	8.5	7.4
CO2		%	0.2	0.2	0.2
O2		%	20.9	20.9	20.9
N2 + CO		%	78.9	78.9	78.9
Rn	Nozzle Dia.	in.	0.191	0.191	0.191
Ts	Stack Temp	°R	497.96	498.04	496.21
		°F	37.96	38.04	36.21
Sqr rt ΔP	Velocity head of stack gas	"H2O	0.9271	0.9299	0.9298
Cp	Pitot Tube Coefficient		0.8396	0.8396	0.8396
Ps	Static Pres	"H2O	-0.17	-0.17	-0.17
Pabs	Absolute Pres	"Hg	23.39	23.40	23.44
As	Area stack	Ft2	3.274	3.274	3.274
Tt	Net time of test	min.	120	120	120
Mg(total)			6.8	7.8	6.4

AMERICAN ENVIRONMENTAL TESTING, INCORPORATED
565 So. Birch Drive 801-266-7111
Spanish Fork, Utah 84660

TABLE 4.1.16
(FIELD AND LABORATORY DATA SUMMARY)

Plant : Chemstar Lime
Source: DC-123
Type : EPA Method #5
Date : 2/12/93

Symbol	Description	Units	Test #1	Test #2	Test #3
Vm	Volume dry gas sampled @ meter conditions	Ft3	75.546	79.258	74.752
		Iso	86.274	90.513	85.367
Pb	Barometric Pres	"Hg abs	23.4	23.39	23.39
ΔH	Average Pres drop across the orifice meter	"H2O	1.7261	1.863	1.7112
Tm	Average gas meter temp	°R	529	526.73	519
		°F	69	66.73	59
Yi	Meter Coefficient		1.142	1.142	1.142
Vw	Total H2O collected, impingers & silica gel	mls	8.7	10.3	10
CO2		%	0.2	0.2	0.2
O2		%	20.9	20.9	20.9
N2 + CO		%	78.9	78.9	78.9
Rn	Nozzle Dia.	in.	0.188	0.188	0.188
Ts	Stack Temp	°R	498.54	496.79	496.17
		°F	38.54	36.79	36.17
Sqr rt ΔP	Velocity head of stack gas	"H2O	1.0241	1.0615	1.0274
Cp	Pitot Tube Coefficient		0.8413	0.8413	0.8413
Ps	Static Pres	"H2O	-0.18	-0.18	-0.18
Pabs	Absolute Pres	"Hg	23.39	23.38	23.38
As	Area stack	Ft2	4.276	4.276	4.276
Tt	Net time of test	min.	120	120	120
Mg(total)			7.2	6.4	7.8

AMERICAN ENVIRONMENTAL TESTING, INCORPORATED
565 So. Birch Drive 801-266-7111
Spanish Fork, Utah 84660

TABLE 4.1.17
(FIELD AND LABORATORY DATA SUMMARY)

Plant : Chemstar Lime
Source: DC-126
Type : EPA Method #5
Date : 2/13/93

Symbol	Description	Units	Test #1	Test #2	Test #3
Vm	Volume dry gas sampled @ meter conditions	Ft3	87.94	87.552	86.772
		lso	88.116	87.727	86.946
Pb	Barometric Pres	"Hg abs	23.48	23.47	23.46
ΔH	Average Pres drop across the orifice meter	"H2O	1.3531	1.3326	1.2987
Tm	Average gas meter temp	°R	537.77	539.4	541.52
		°F	77.77	79.4	81.52
Yi	Meter Coefficient		1.002	1.002	1.002
Vw	Total H2O collected, impingers & silica gel	mls	9.8	8.9	12.3
CO2		%	0.2	0.2	0.2
O2		%	20.9	20.9	20.9
N2 + CO		%	78.9	78.9	78.9
Rn	Nozzle Dia.	in.	0.191	0.191	0.191
Ts	Stack Temp	°R	499.75	501.67	500.54
		°F	39.75	41.67	40.54
Sqr rt ΔP	Velocity head of stack gas	"H2O	0.9379	0.8821	0.6631
Cp	Pitot Tube Coefficient		0.8396	0.8396	0.8396
Ps	Static Pres	"H2O	-0.11	-0.11	-0.11
Pabs	Absolute Pres	"Hg	23.47	23.46	23.45
As	Area stack	Ft2	0.785	0.785	0.785
Tt	Net time of test	min.	120	120	120
Mg(total)			4.2	6	3.3

AMERICAN ENVIRONMENTAL TESTING, INCORPORATED
565 So. Birch Drive 801-266-7111
Spanish Fork, Utah 84660

TABLE 4.1.18
(FIELD AND LABORATORY DATA SUMMARY)

Plant : Chemstar Lime
Source: DC-129
Type : EPA Method #5
Date : 2/13/93

Symbol	Description	Units	Test #1	Test #2	Test #3
Vm	Volume dry gas sampled @ meter conditions	Ft3	79.231	80.259	83.328
		lso	90.482	91.656	95.161
Pb	Barometric Pres	"Hg abs	23.7	23.74	23.74
ΔH	Average Pres drop across the orifice meter	"H2O	1.8005	1.8096	1.9144
Tm	Average gas meter temp	°R	532	494.17	534.54
		°F	72	34.17	74.54
Yi	Meter Coefficient		1.142	1.142	1.142
Vw	Total H2O collected, impingers & silica gel	mls	11.7	5.5	10.5
CO2		%	0.2	0.2	0.2
O2		%	20.9	20.9	20.9
N2 + CO		%	78.9	78.9	78.9
Rn	Nozzle Dia.	in.	0.188	0.1877	0.191
Ts	Stack Temp	°R	500.5	499.08	495.58
		°F	40.5	39.08	35.58
Sqr rt ΔP	Velocity head of stack gas	"H2O	1.049	1.0515	0.6631
Cp	Pitot Tube Coefficient		0.8413	0.8413	1.0725
Ps	Static Pres	"H2O	-0.68	-0.68	-0.68
Pabs	Absolute Pres	"Hg	23.65	23.69	23.69
As	Area stack	Ft2	0.785	0.785	0.785
Tt	Net time of test	min.	120	120	120
Mg(total)			8.3	2.9	3.1

AMERICAN ENVIRONMENTAL TESTING, INCORPORATED
565 So. Birch Drive 801-266-7111
Spanish Fork, Utah 84660

TABLE 4.1.19
(FIELD AND LABORATORY DATA SUMMARY)

Plant : Chemstar Lime
Source: DC-230
Type : EPA Method #5
Date : 2/15/93

Symbol	Description	Units	Test #1	Test #2	Test #3
Vm	Volume dry gas sampled @ meter conditions	Ft3	90.552	95.217	94.658
		Iso	103.410	95.407	94.847
Pb	Barometric Pres	"Hg abs	23.33	23.3	23.31
ΔH	Average Pres drop across the orifice meter	"H2O	1.4261	1.5252	1.4981
Tm	Average gas meter temp	°R	550.71	551.44	549.69
		°F	90.71	91.44	89.69
Yi	Meter Coefficient		1.142	1.002	1.002
Vw	Total H2O collected, impingers & silica gel	mls	1.8	1.4	2.1
CO2		%	0.2	0.2	0.2
O2		%	20.9	20.9	20.9
N2 + CO		%	78.9	78.9	78.9
Rn	Nozzle Dia.	in.	0.188	0.244	0.244
Ts	Stack Temp	°R	491.21	485.04	486.29
		°F	31.21	25.04	26.29
Sqr rt ΔP	Velocity head of stack gas	"H2O	0.5826	0.5997	0.596
Cp	Pitot Tube Coefficient		0.8396	0.8396	0.8396
Ps	Static Pres	"H2O	-0.05	-0.05	-0.05
Pabs	Absolute Pres	"Hg	23.62	23.30	23.31
As	Area stack	Ft2	4.276	4.276	4.276
Tt	Net time of test	min.	120	120	120
Mg(total)			5.3	6	3.7

Table 4.1.20 DC-303
Table 4.1.21 DC-316

The original laboratory and field data accumulated at the test site are presented in Appendix "D". Orsat and laboratory weight forms are hand written on site as the data is generated.

Particulate and velocity measurements, required in the applicable reference methods, are generated in the field by computer. These forms are also included in Appendix "D" for each of the three (3) runs that comprise a compliance test. Compliance criteria is calculated using computer and hand-written field forms and are summarized in the following tables for each source (Calculated Summary):

Table 4.1.22 DC-120
Table 4.1.23 DC-123
Table 4.1.24 DC-126
Table 4.1.25 DC-129
Table 4.1.26 DC-230
Table 4.1.27 DC-303
Table 4.1.28 DC-316

A copy of the example calculations are attached as Appendix "E".

Figure 4.1.29 is a schematic of the sample train used to obtain the field data. A stainless steel probe liner was used for the testing. The glass fiber filters used in the train are 99.95% efficient on 0.3 micron particles and have no organic binders (Andersen P-3710). These filters are tared before use and after the test to determine particulate loading. Filter weights and particulate in the acetone washes of the glassware and probe ahead of the filter constitute the total particulate catch. The probe and filter are kept at 248°F ± 25° during sampling on the DC-316 stack and less than 250°F on the other six stacks.

Moisture in the stack gases is collected by keeping the impingers in the sample train below 68°F with an ice bath. The "back-half" of the moisture sampling train contained the following impingers:

AMERICAN ENVIRONMENTAL TESTING, INCORPORATED
565 So. Birch Drive 801-266-7111
Spanish Fork, Utah 84660

TABLE 4.1.20
(FIELD AND LABORATORY DATA SUMMARY)

Plant : Chemstar Lime
Source: DC-303
Type : EPA Method #5
Date : 2/14/93

Symbol	Description	Units	Test #1	Test #2	Test #3
Vm	Volume dry gas sampled @ meter conditions	Ft3	96.461	96.785	97.845
		lso	110.158	110.528	98.041
Pb	Barometric Pres	"Hg abs	23.67	23.67	23.65
ΔH	Average Pres drop across the orifice meter	"H2O	2.4999	2.5027	2.5027
Tm	Average gas meter temp	°R	552.06	557.75	541.52
		°F	92.06	97.75	81.52
Yi	Meter Coefficient		1.142	1.142	1.002
Vw	Total H2O collected, impingers & silica gel	mls	5.2	6.3	12.3
CO2		%	0.3	0.2	0.2
O2		%	20.85	20.9	20.9
N2 + CO		%	78.85	78.9	78.9
Rn	Nozzle Dia.	in.	0.242	0.2417	0.191
Ts	Stack Temp	°R	498	498.5	500.54
		°F	38	38.5	40.54
Sqr rt ΔP	Velocity head of stack gas	"H2O	0.6132	0.6163	0.6631
Cp	Pitot Tube Coefficient		1	1	0.8396
Ps	Static Pres	"H2O	-0.23	-0.23	-0.11
Pabs	Absolute Pres	"Hg	23.65	23.65	23.45
As	Area stack	Ft2	0.328	0.328	0.328
Tt	Net time of test	min.	120	120	120
Mg(total)			3.7	2	3.3

AMERICAN ENVIRONMENTAL TESTING, INCORPORATED
565 So. Birch Drive 801-266-7111
Spanish Fork, Utah 84660

TABLE 4.1.21
(FIELD AND LABORATORY DATA SUMMARY)

Plant : Chemstar Lime
Source: DC- 316
Type : EPA Method #5
Date : 2/15/93

Symbol	Description	Units	Test #1	Test #2	Test #3
Vm	Volume dry gas sampled @ meter conditions	Ft3	35.3	36.173	35.253
		lso	40.313	41.310	40.259
Pb	Barometric Pres	"Hg abs	23.45	23.3	23.45
ΔH	Average Pres drop across the orifice meter	"H2O	1.6543	1.6609	1.6326
Tm	Average gas meter temp	°R	535.27	525.46	521.79
		°F	75.27	65.46	61.79
Yi	Meter Coefficient		1.142	1.142	1.142
Vw	Total H2O collected, impingers & silica gel	mls	87.6	77.8	72.4
CO2		%	21.4	21.5	22.1
O2		%	7.5	7.46	7.34
N2 + CO		%	71.1	71.04	70.56
Rn	Nozzle Dia.	in.	0.188	0.188	0.188
Ts	Stack Temp	°R	661.67	662.17	665.5
		°F	201.67	202.17	205.5
Sqr rt ΔP	Velocity head of stack gas	"H2O	1.2313	1.2469	1.2437
Cp	Pitot Tube Coefficient		0.8413	0.8413	0.8413
Ps	Static Pres	"H2O	-0.25	-0.25	-0.25
Pabs	Absolute Pres	"Hg	23.43	23.28	23.08
As	Area stack	Ft2	12.048	12.048	12.048
Tt	Net time of test	min.	120	120	120
Mg(total)			9	9.6	7.3

AMERICAN ENVIRONMENTAL TESTING, INCORPORATED
565 So. Birch Drive 801-266-7111
Spanish Fork, Utah 84660

TABLE 4.1.22
(CALCULATED COMPLIANCE CRITERIA)

Plant : Chemstar Lime
Source: DC-120
Type : EPA Method #5
Date : 2/12/93

SYMBOL	DESCRIPTION	UNITS	Test #1	Test #2	Test #3
Vm std	Volume dry gas	dscfm	0.5470	0.5583	0.5465
	sampled @ standard Conditions	dscf	65.6375	66.9964	65.5825
Vw gas	Volume water vapor collected @ standard conditions	scf	0.2918	0.4001	0.3483
Bws	Proportion by volume of water vapor in gas stream dimensionless		0.0044	0.0059	0.0053
Md	Dry molecular weight	lb/lb mole	28.868	28.868	28.912
Ms	Wet molecular weight	lb/lb mole	28.8199	28.8035	28.8544
Vs	Stack gas velocity	ft/sec	57.1996	57.3774	57.1674
Qs	Volumetric flow rate dry basis standard conditions	ft3/hr	5.5628 x E +05	5.5731 x E +05	5.5864 x E +05
Iso	Isokinetic variation	%	98.7331	100.0993	99.1755
Cs	Conc. Particulate matter in stack gas dry basis	lb/scf	1.036 x E -04	1.1642 x E -04	9.7587 x E -05
Emr	Emission rate *	lbs/dscf	2.2839 x E -07	2.5667 x E -07	2.1514 x E -07
		gr/dscf	0.0016	0.0018	0.0015
		lbs/hr	0.1271	0.143	0.1202

AMERICAN ENVIRONMENTAL TESTING, INCORPORATED
565 So. Birch Drive 801-266-7111
Spanish Fork, Utah 84660

TABLE 4.1.23
(CALCULATED COMPLIANCE CRITERIA)

Plant : Chemstar Lime
Source: DC-123
Type : EPA Method #5
Date : 2/12/93

SYMBOL	DESCRIPTION	UNITS	Test #1	Test #2	Test #3
Vm std	Volume dry gas	dscfm	0.5579	0.5853	0.5518
	sampled @ standard	dscf	66.9516	70.2415	66.2167
	Conditions				
Vw gas	Volume water	scf	0.4095	0.4848	0.4707
	vapor collected @				
	standard conditions				
Bws	Proportion by		0.0061	0.0069	0.0071
	volume of water				
	vapor in gas stream				
	dimensionless				
Md	Dry molecular	lb/lb mole	28.868	28.868	28.868
	weight				
Ms	Wet molecular	lb/lb mole	28.8019	28.7935	28.7913
	weight				
Vs	Stack gas	ft/sec	63.3643	65.5893	63.443
	velocity				
Qs	Volumetric flow	ft3/hr	8.0257	8.3267	8.0627
	rate dry basis		x E +05	x E +05	x E +05
	standard conditions				
Iso	Isokinetic	%	93.5661	95.0195	93.8755
	variation				
Cs	Conc. Particulat	lb/scf	1.0754	9.1114	1.178
	matter in stack		x E -04	x E -05	x E -04
	gas dry basis				
Emr	Emission rate *	lbs/dscf	2.3708	2.0087	2.5969
			x E -07	x E -07	x E -07
		gr/dscf	0.0017	0.0014	0.0018
		lbs/hr	0.1903	0.1673	0.2094

AMERICAN ENVIRONMENTAL TESTING, INCORPORATED
565 So. Birch Drive 801-266-7111
Spanish Fork, Utah 84660

TABLE 4.1.24
(CALCULATED COMPLIANCE CRITERIA)

Plant : Chemstar Lime
Source: DC-126
Type : EPA Method #5
Date : 2/13/93

SYMBOL	DESCRIPTION	UNITS	Test #1	Test #2	Test #3
Vm std	Volume dry gas sampled @ standard Conditions	dscfm	0.5456	0.5429	0.5378
		dscf	65.4746	65.1539	64.5392
Vw gas	Volume water vapor collected @ standard conditions	scf	0.4613	0.4189	0.579
Bws	Proportion by volume of water vapor in gas stream dimensionless		0.007	0.0064	0.0089
Md	Dry molecular weight	lb/lb mole	28.868	28.868	28.868
Ms	Wet molecular weight	lb/lb mole	28.792	28.7986	28.7714
Vs	Stack gas velocity	ft/sec	57.8931	57.6475	56.7782
Qs	Volumetric flow rate dry basis standard conditions	ft3/hr	1.3472 x E +05	1.3366 x E +05	1.3155 x E +05
Iso	Isokinetic variation	%	99.8557	99.8565	100.0995
Cs	Conc. Particulate matter in stack gas dry basis	lb/scf	6.4147 x E -05	9.209 x E -05	5.1132 x E -05
Emr	Emission rate *	lbs/dscf	1.4142 x E -07	2.0302 x E -07	1.1272 x E -07
		gr/dscf	0.001	0.0014	0.0008
		lbs/hr	0.0191	0.0271	0.0148

AMERICAN ENVIRONMENTAL TESTING, INCORPORATED
565 So. Birch Drive 801-266-7111
Spanish Fork, Utah 84660

TABLE 4.1.25
(CALCULATED COMPLIANCE CRITERIA)

Plant : Chemstar Lime
Source: DC-129
Type : EPA Method #5
Date : 2/13/93

SYMBOL	DESCRIPTION	UNITS	Test #1	Test #2	Test #3
Vm std	Volume dry gas	dscfm	0.5927	0.6015	0.6247
	sampled @ standard Conditions	dscf	71.1291	72.175	74.959
Vw gas	Volume water vapor collected @ standard conditions	scf	0.5507	0.2589	0.4942
Bws	Proportion by volume of water vapor in gas stream dimensionless		0.0077	0.0036	0.0066
Md	Dry molecular weight	lb/lb mole	28.868	28.8292	28.868
Ms	Wet molecular weight	lb/lb mole	28.7845	28.8292	28.7968
Vs	Stack gas velocity	ft/sec	64.6903	64.6488	65.7469
Qs	Volumetric flow rate dry basis standard conditions	ft3/hr	1.5135 x E +05	1.5257 x E +05	1.5579 x E +05
Iso	Isokinetic variation	%	96.2738	96.8287	98.102
Cs	Conc. Particulate matter in stack gas dry basis	lb/scf	1.1669 x E -04	4.018 x E -05	4.1356 x E -05
Emr	Emission rate *	lbs/dscf	2.5725 x E -07	8.8581 x E -08	9.1173 x E -08
		gr/dscf	0.0018	0.0006	0.0006
		lbs/hr	0.0389	0.0135	0.0142

AMERICAN ENVIRONMENTAL TESTING, INCORPORATED
565 So. Birch Drive 801-266-7111
Spanish Fork, Utah 84660

TABLE 4.1.26
(CALCULATED COMPLIANCE CRITERIA)

Plant : Chemstar Lime
Source: DC-230
Type : EPA Method #5
Date : 2/15/93

SYMBOL	DESCRIPTION	UNITS	Test #1	Test #2	Test #3
Vm std	Volume dry gas	dscfm	0.5584	0.5866	5.8333
	sampled @ standard Conditions	dscf	67.0058	70.3895	700.0002
Vw gas	Volume water vapor collected @ standard conditions	scf	0.0847	0.0659	0.0988
Bws	Proportion by volume of water vapor in gas stream dimensionless		0.0013	0.0009	0.0014
Md	Dry molecular weight	lb/lb mole	28.868	28.868	28.868
Ms	Wet molecular weight	lb/lb mole	28.8543	28.8578	28.8527
Vs	Stack gas velocity	ft/sec	35.7267	36.5651	36.3773
Qs	Volumetric flow rate dry basis standard conditions	ft3/hr	4.603 x E +05	4.7664 x E +05	4.7295 x E +05
Iso	Isokinetic variation	%	97.2223	98.7446	99.2781
Cs	Conc. Particulate matter in stack gas dry basis	lb/scf	7.9098 x E -05	8.524 x E -05	5.2857 x E -05
Emr	Emission rate *	lbs/dscf	1.7438 x E -07	1.8792 x E -07	1.1653 x E -07
		gr/dscf	0.0012	0.0013	0.0008
		lbs/hr	0.0803	0.0896	0.0551

AMERICAN ENVIRONMENTAL TESTING, INCORPORATED
565 So. Birch Drive 801-266-7111
Spanish Fork, Utah 84660

TABLE 4.1.27
(CALCULATED COMPLIANCE CRITERIA)

Plant : Chemstar Lime
Source: DC-303
Type : EPA Method #5
Date : 2/14/93

SYMBOL	DESCRIPTION	UNITS	Test #1	Test #2	Test #3
Vm std	Volume dry gas	dscfm	0.7223	0.7247	0.7320
	sampled @ standard	dscf	86.6718	86.9662	87.8457
	Conditions				
Vw gas	Volume water	scf	0.2448	0.3624	0.2965
	vapor collected @				
	standard conditions				
Bws	Proportion by		0.0028	0.0042	0.0034
	volume of water				
	vapor in gas stream				
	dimensionless				
Md	Dry molecular	lb/lb mole	28.882	28.882	28.882
	weight				
Ms	Wet molecular	lb/lb mole	28.8514	28.8368	28.8454
	weight				
Vs	Stack gas	ft/sec	44.7843	45.0451	44.9408
	velocity				
Qs	Volumetric flow	ft3/hr	4.4143	4.4296	4.4125
	rate dry basis		x E +04	x E +04	x E +04
	standard conditions				
Iso	Isokinetic	%	97.5799	97.7204	98.1822
	variation				
Cs	Conc. Particulat	lb/scf	4.269	2.2997	4.4396
	matter in stack		x E -05	x E -05	x E -05
	gas dry basis				
Emr	Emission rate *	lbs/dscf	9.4113	5.07	9.7875
			x E -08	x E -08	x E -08
		gr/dscf	0.0007	0.0004	0.0007
		lbs/hr	0.0042	0.0022	0.0043

AMERICAN ENVIRONMENTAL TESTING, INCORPORATED
565 So. Birch Drive 801-266-7111
Spanish Fork, Utah 84660

TABLE 4.1.28
(CALCULATED COMPLIANCE CRITERIA)

Plant : Chemstar Lime
Source: DC-316
Type : EPA Method #5
Date : 2/15/93

SYMBOL	DESCRIPTION	UNITS	Test #1	Test #2	Test #3
Vm std	Volume dry gas	dscfm	0.2564	0.2611	0.2522
	sampled @ standard Conditions	dscf	30.7685	31.3295	30.2692
Vw gas	Volume water vapor collected @ standard conditions	scf	4.1233	3.662	3.4079
Bws	Proportion by volume of water vapor in gas stream dimensionless		0.1182	1.047	0.1012
Md	Dry molecular weight	lb/lb mole	31.724	31.7384	31.8296
Ms	Wet molecular weight	lb/lb mole	30.1022	30.3006	30.4301
Vs	Stack gas velocity	ft/sec	85.7757	86.8892	87.0693
Qs	Volumetric flow rate dry basis standard conditions	ft3/hr	2.0503 x E +06	2.0936 x E +06	2.0775 x E +06
Iso	Isokinetic variation	%	95.3052	96.6466	94.7074
Cs	Conc. Particulate matter in stack gas dry basis	lb/scf	2.9251 x E -04	3.0642 x E -04	2.14117 x E -04
Emr	Emission rate *	lbs/dscf	6.4486 x E -07	6.7553 x E -07	5.3168 x E -07
		gr/dscf	0.0045	0.0047	0.0037
		lbs/hr	1.3221	1.4143	1.1046

Figure 4.1.29

EPA Method 5 Sample Train

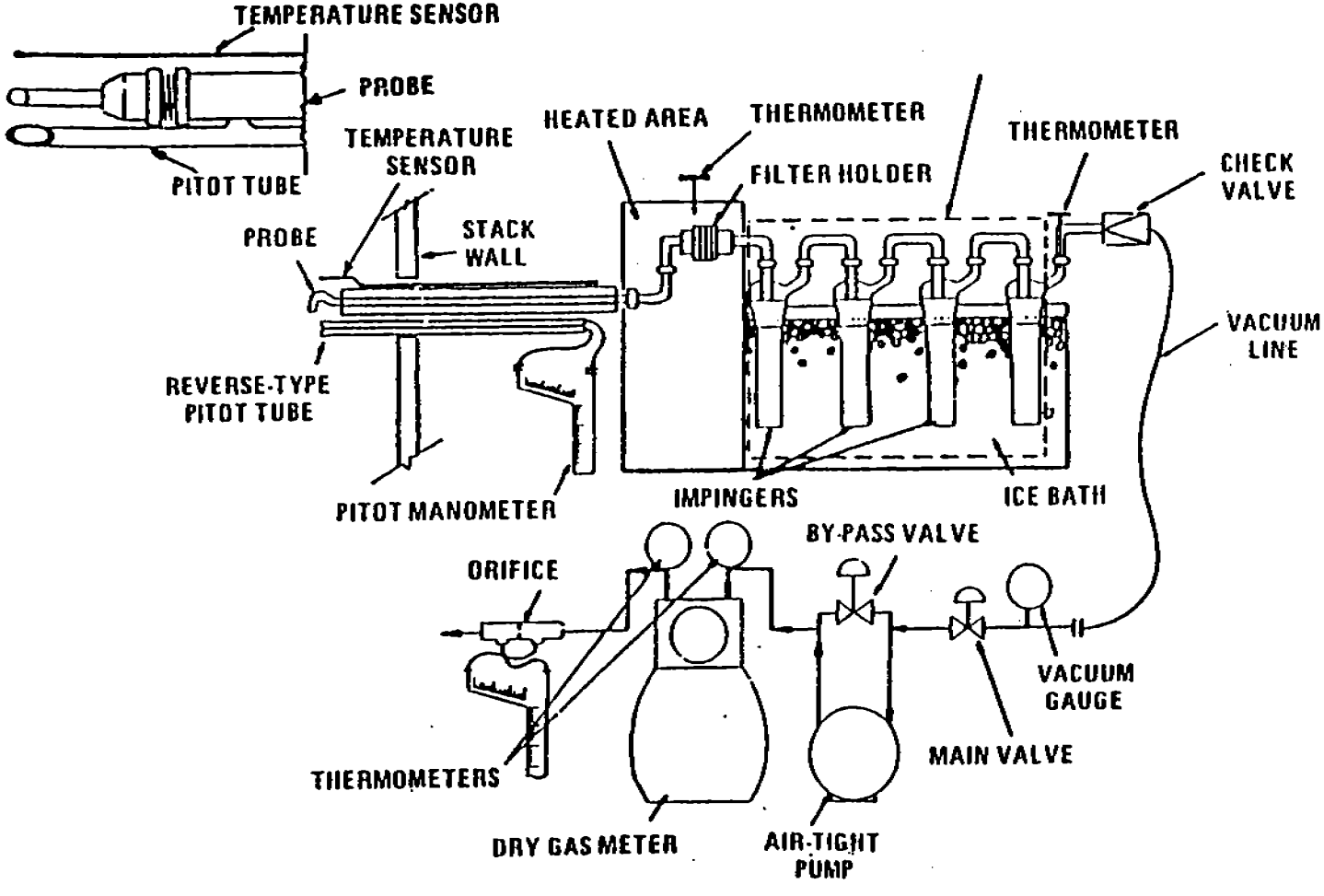

Impinger Number	Contents	Amount	Parameter Collected
1	Deionized Water	100 ml	Moisture
2	Deionized Water	100 ml	Moisture
3	Empty	-------	Moisture
4	Silica Gel	@200 g	Moisture

Prior to doing the EPA Method 5 tests, AET ran a pretest cyclonic flow determination in the exhaust stacks per EPA Method 2 criteria. The stacks are testable if the average flow rate varies less than 20° from parallel to the vertical stack. The average angle for each source is listed in Table 4.1.30. See Appendix "F" for the field forms.

Table 4.1.30

(Cyclonic Flow Angle)

Source	Average Angle
DC-120	9.33°
DC-123	4.0°
DC-126	10.58°
DC-129	8.42°
DC-230	1.5°
DC-303	<1.0°
DC-316	7.71°

On all tests for particulate matter, the sampling train was leak-checked at the nozzle at 15 inches of vacuum (Hg), and the reading recorded on the computer forms. This was done to predetermine the possibility of a diluted sample. After each test is complete AET conducts a final leak check to insure

sample integrity. Those values are also included in the computer printouts. Before and after each test, the pitot tube lines were checked for leaks under both a vacuum and pressure. The lines were also checked for clearance and the manometer was zeroed before each test. These leak checks are shown on the computer forms for each run in Appendix "D".

D. EPA Method 6C; for the determination of SO_2 emissions from stationary sources (Instrumental Analysis Procedures).

In this reference method a continuous gas sample is extracted from a sampling point in the stack and analyzed for sulfur dioxide using a pulsed fluorescence analyzer. SO_2 concentration is measured using a TECO 40A SO_2 analyzer.

Results from these tests are summarized in Table 2.2.1 for the DC-316 exhaust stack. Individual data-logger sheets for SO_2 are included in Appendix "D-1". CEM readings taken from the data-logger every minute for thirty minutes, as per IDEQ requirements, are also included in Appendix "D-1".

E. EPA Method 7E; for the determination of NO_x and diluent emissions (O_2) from stationary sources (Chemiluminescent for NO_x).

In this reference method a continuous gas sample is extracted from a sampling point in the stack and analyzed for oxides of nitrogen using a chemiluminescent analyzer. A TECO 10A NO_x analyzer is used to determine the concentration of NO_x in the stack gases.

Results for NO_x are summarized in Table 2.3.1. Individual data-logger sheets for NO_x on the DC-316 are included in Appendix "D-1". CEM readings taken from the data-logger every minute for thirty minutes, as per IDEQ requirements, are also included in Appendix "D-1".

F. EPA Method 9; for visible emissions opacity.

During each of the EPA Method 5 runs, AET had a certified VEO observer compile VEO's consisting of one 3 hour observations for the DC-120, DC-123, DC-126, DC-129, DC-230 and the DC-303. The average VEO for each of these sources was 0%.

VEO's for the DC-316 consisted of three 6 minute observations. The average VEO for the DC-316 was 0.90%.

Field VEO forms and the readers current certification cards are included as Appendix "F".

G. EPA Method 10; for the determination of carbon monoxide emissions from stationary sources.

In this reference method a continuous gas sample is extracted from a sampling point in the stack and analyzed for carbon monoxide content using a nondispersive infrared analyzer NDIR. CO_2 interference in the IR is elminated using an ascarite trap. The final CO concentrations need to be corrected for the CO_2 content in the original sample.

$$C_{co\ stack} = C_{co\ NDIR}\ (1 - F_{co2})$$

Results for CO are summarized in Table 2.4.1 Individual data-logger sheets for CO on the DC-316 are included in Appendix "D-1". CEM readings taken from the data-logger every minute for thirty minutes, as per IDEQ requirements, are also included in Appendix "D-1".

Figure 4.1.31 shows the sample train that is used to extract and condition the gases for the SO_2, CO, O_2 and NO_x analyzers.

American Environmental Testing Company, Inc.
565 South Birch Drive
Spanish Fork, Utah 84660
(801) 266-7111

Figure 4.1.31

(CEM Sample Train)

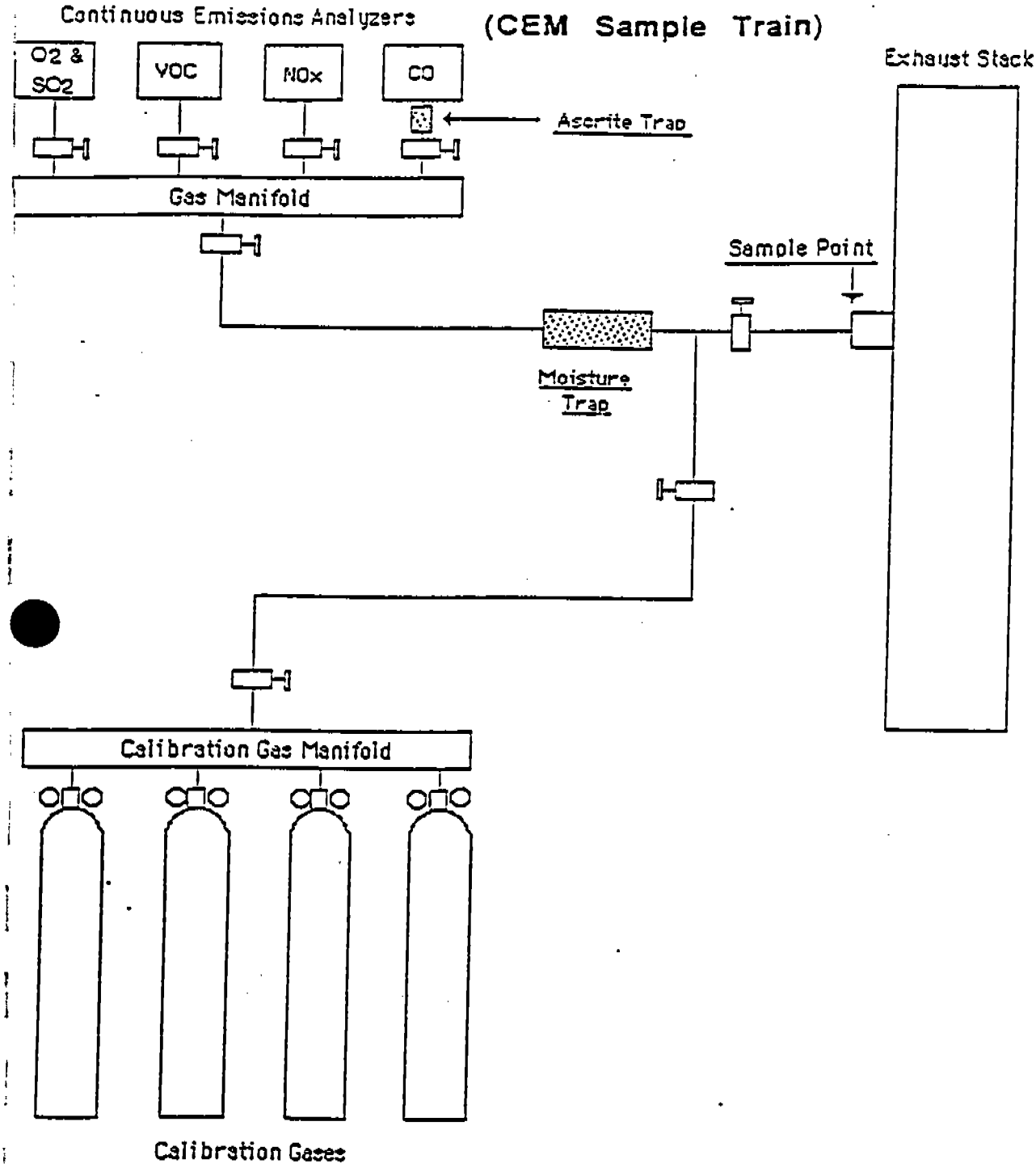

5.0 Quality Control/Quality Assurance

5.1 Compliance Testing

Specific items used in the EPA approved sample trains require pretest and post-test calibrations. The frequency of the calibrations and guidelines for procedural items are delineated in the EPA's "Quality Assurance Handbook for Air Pollution Measurement Systems".

For EPA Methods 1-5 inclusive the quality assurance guidelines are intended to insure that the particulate emissions are quantified in a manner consistent with the most stringent sampling criteria possible. AET testing personnel are thoroughly trained in all aspects of the EPA required QA/QC guidelines. The crew supervisor has certified at the front of this report that the test crew adhered to those guidelines in the regulations applicable to EPA Method 5, 6C, 7E and 10 compliance testing at Chemstar Lime. There were no deviations from prescribed methodology reported by the supervisor.

Calibrations for the sample nozzle pitot tube thermocouples, orifice, filter balance and dry gas meter used to extract the sample at an isokinetic rate of 100% ± 10.0% are attached as Appendix "H".

The main quality criteria that AET is required to fulfill for EPA Method 5 on the DC-120, DC-123, DC-126, DC-129, DC-230, DC-303 and the DC-316 are as follows:

DC-120

1. Isokinetic Sampling Rate = 100 ± 10.0%

AET Run Number	Sampling Rate
1	98.7331
2	100.0993
3	99.1755
Average =	99.3360

2. Sampling Volume = > 60 DSCF

AET Run Number	Sample Volume (DSCF)
1	65.6375
2	66.9964
3	65.5825
Average =	66.0721

3. Sampling Rate = > 0.531 DSCFM

AET Run Number	Sample Volume (DSCF)
1	0.5470
2	0.5583
3	0.5465
Average =	0.5506

All of the compliance test quality assurance criteria were achieved for this set of tests.

DC-123

1. Isokinetic Sampling Rate = 100 ± 10.0%

AET Run Number	Sampling Rate
1	93.5661
2	95.0195
3	93.8755
Average =	94.1537

2. Sampling Volume = > 60 DSCF

AET Run Number	Sample Volume (DSCF)
1	66.9516
2	70.2415
3	66.2167
Average =	67.8033

3. Sampling Rate = > 0.531 DSCFM

AET Run Number	Sample Volume (DSCF)
1	0.5579
2	0.5853
3	0.5518
Average =	0.565

All of the compliance test quality assurance criteria were achieved for this set of tests.

DC-126

1. Isokinetic Sampling Rate = 100 ± 10.0%

AET Run Number	Sampling Rate
1	99.8557
2	99.8565
3	100.0995
Average =	104.38

2. Sampling Volume = > 60 DSCF

AET Run Number	Sample Volume (DSCF)
1	65.4746
2	65.1539
3	64.5392
Average =	65.0559

3. Sampling Rate = > 0.531 DSCFM

AET Run Number	Sample Volume (DSCF)
1	0.5456
2	0.5429
3	0.5378
Average =	0.5421

All of the compliance test quality assurance criteria were achieved for this set of tests.

DC-129

1. Isokinetic Sampling Rate = 100 ± 10.0%

AET Run Number	Sampling Rate
1	96.2738
2	96.8287
3	98.1020
Average =	97.0682

2. Sampling Volume = > 60 DSCF

AET Run Number	Sample Volume (DSCF)
1	71.1291
2	72.1750
3	74.9590
Average =	72.7544

3. Sampling Rate = > 0.531 DSCFM

AET Run Number	Sample Volume (DSCF)
1	0.5927
2	0.6015
3	0.6247
Average =	0.6063

All of the compliance test quality assurance criteria were achieved for this set of tests.

DC-230

1. Isokinetic Sampling Rate = 100 ± 10.0%

AET Run Number	Sampling Rate
1	97.2223
2	98.7446
3	99.2781
Average =	98.415

2. Sampling Volume = > 60 DSCF

AET Run Number	Sample Volume (DSCF)
1	67.0058
2	70.3895
3	70.0002
Average =	69.1318

3. Sampling Rate = > 0.531 DSCFM

AET Run Number	Sample Volume (DSCF)
1	0.5584
2	0.5866
3	0.5833
Average =	0.5761

All of the compliance test quality assurance criteria were achieved for this set of tests.

DC-303

1. Isokinetic Sampling Rate = 100 ± 10.0%

AET Run Number	Sampling Rate
1	97.5799
2	97.7204
3	98.1822
Average =	97.8275

2. Sampling Volume = > 60 DSCF

AET Run Number	Sample Volume (DSCF)
1	86.6718
2	86.9662
3	87.8457
Average =	87.1612

3. Sampling Rate = > 0.531 DSCFM

AET Run Number	Sample Volume (DSCF)
1	0.7223
2	0.7427
3	0.7320
Average =	0.7323

All of the compliance test quality assurance criteria were achieved for this set of tests.

DC-316

1. Isokinetic Sampling Rate = 100 ± 10.0%

AET Run Number	Sampling Rate
1	95.3052
2	96.6466
3	94.7074
Average =	95.5531

2. Sampling Volume = > 30 DSCF

AET Run Number	Sample Volume (DSCF)
1	30.7685
2	31.3295
3	30.2692
Average =	30.7891

3. Sampling Rate = > 0.531 DSCFM

AET Run Number	Sample Volume (DSCF)
1	0.5129
2	0.5222
3	0.5045
Average =	0.5132

The average sampling rate for these tests is .018 DSCFM below the required rate. The tester elected to maintain isokinetic sampling and sacrifice a minor amount on this requirement. Nozzle selection would not allow us to meet both requirements.

Appendix "A"

(Operating Permit)

American Environmental Testing Company Inc.

801-266-7111

APPENDIX "A"

Chemstar Lime Kiln

Hourly (lb/hr) and Annual (T/yr) Emission Limits[a]

Source Description	TSP		PM-10		CO		NOx		SO_2	
	lb/hr	T/yr	lb/hr	T/yr	lb/hr	T/yr	lb/hr	T/yr	lb/hr	T/yr
Primary Crushing DC-120	0.412	0.358	0.358	0.139						
Primary Screening & Crushing DC-123	0.476	0.419	0.297	0.263						
Conveyor belt transfer (belt #1 to belt #2) DC-126	0.03	0.027	0.014	0.013						
Conveyor belt transfer (belt #2 to stacker belt) DC-~~132~~ 129	0.03	0.027	0.014	0.013						
Secondary & Tertiary Screening DC 230	0.108	0.44	0.014	0.298						
Kiln Feed DC-303	0.006	0.026	0.003	0.012						
Vertical Kiln DC-~~308~~ 316	2.0	8.064	2.0	8.064	2.5	10.1	8.1	32.7	1.6	5.5

----continued----

Source Description	TSP		PM-10		CO		NOx		SO_2	
	lb/hr	T/yr	lb/hr	T/yr	lb/hr	T/yr	lb/hr	T/yr	lb/hr	T/yr
Lime handling Baghouse DC-504	5.2E-4	2.1E-3	2.4E-4	1E-3						
Lime handling Baghouse DC-537	.041	0.17	3.2E-3	1.3E-2						
Lime handling Baghouse DC-518	0.24	0.10	0.018	0.07						
Lime handling Baghouse DC-540	2.1E-3	2.2E-3	9.5E-4	1.0E-3						
Lime handling Baghouse DC-531	2.1E-3	2.2E-3	9.5E-4	1.0E-3						
Lime handling Baghouse DC-332	2.1E-5	2.2E-5	9.8E-6	1.0E-5						

Scientific Notation is represented with "E"s. 1.0E-3 equals 1.0×10^{-3} or 0.001

(a) As determined by pollutant specific EPA Reference Methods stated in 40 CFR Part 60, Subpart 000, Department approved alternative, or as determined by the Department emission estimation methods used in this Chemstar Lime Company permit application analysis.

March 30, 1992

M E M O R A N D U M

TO: Orville D. Green, Assistant Administrator
Permits and Enforcement

FROM: Dan Pittman, Air Quality Engineer
Permits and Enforcement

THROUGH: Martin Bauer, Chief
New Source Review Bureau
Permits and Enforcement

SUBJECT: Recommendation on Permit to Construct: Chemstar Lime Company (Soda Springs) -- P-911201 (Lime Kiln Permit Modifications)

Purpose

The purpose of this memorandum is to satisfy the requirements of IDAPA 16.01.01012 (Rules and Regulations for the Control of Air Pollution in Idaho) for issuing Permits to Construct.

Process Description

Chemstar was issued two permits to construct a lime Quarry and Kiln near Soda Springs on June 24, 1991. Limestone is mined in the quarry and lime is produced in a lime kiln. Even though the quarry and kiln are located on adjacent property, and are under common ownership, they are considered two separate facilities for permitting purposes.

Quarrying operations consist of drilling, blasting, loading and hauling techniques. Chemstar's proposed amendments do not affect quarrying operations.

Kiln operations consist of primary crushing and screening, secondary crushing and screening, a vertical lime kiln and lime handling system.

Chemstar's proposed modifications consist of moving and/or deleting some emission units which are permitted in the Lime Kiln Permit to Construct.

Summary of Events

On November 25, 1991 DEQ received Chemstar Lime Company's application to amend the Lime Kiln Permit to Construct. Chemstar's application was determined incomplete on December 26, 1991.

Chemstar's latest resubmittal was received on December 30, 1991 and their application was determined complete January 28, 1992.

Recommendation

Staff have reviewed Chemstar's application to amend the Lime Kiln Permit to Construct. Based on a review of that application and all applicable state and federal regulations staff recommend that Chemstar be issued an amended Permit to Construct. Staff also recommend that no public comment period is needed on this project because the source does not fall under Prevention of Significant Deterioration requirements.

Martin Bauer
Chief
New Source Review Bureau
Permits and Enforcement

cc: R. Elkins, EIRO
D. Cole, EPA-I00
D. Pitman
Source File
File Manual
COF 1.1

STATE OF IDAHO PERMIT TO CONSTRUCT AN AIR POLLUTION EMITTING SOURCE	PERMIT NUMBER 0420 — 0029 AQCR: 61 CLASS: B SIC: 1422 ZONE: 12 UTM COORDINATE (km): 436.4 , 4734.1

1. PERMITTEE

Chemstar Lime Company

2. PROJECT

Lime Kiln

3. ADDRESS		COUNTY	NO. OF FULL TIME EMPLOYEES
2800 44th Street, Suite 400		Quarry Site: Caribou Cnty	35
4. CITY	**STATE**	**ZIP CODE**	**PROPERTY AREA AT SITE (Acreage)**
Phoenix	Arizona	85008-1557	710
5. PERSON TO CONTACT		**TITLE**	**TELEPHONE NUMBER**
William Dodge		Vice President Manufacturing	(602) 955-5711

6. EXACT PLANT LOCATION

Approximately 12.5 miles northwest of Soda Springs within Section 34 and the southwest one quarter of Section 35, Township 7 south, Range 40 east, and the northern one half of Section 3, Township 8 south, Range 40 east.

7. GENERAL NATURE OF BUSINESS AND KINDS OF PRODUCTS

Production and distribution of chemical lime.

8. GENERAL CONDITIONS

This permit is issued according to the **Rules and Regulations for the Control of Air Pollution in Idaho,** Section 01.1012, and pertains only to emissions of air contaminants which are regulated by the State of Idaho and to the sources specifically allowed to be constructed by this permit.

This permit (a) does not affect the title of the premises upon which the equipment is to be located, (b) does not release the permittee from any liability for any loss due to damage to person or property caused by, resulting from, or arising out of the design, installation, maintenance, or operation of the proposed equipment, (c) does not release the permittee from compliance with other applicable local laws, regulations, or ordinances, (d) in no manner implies or suggests that the Department of Health and Welfare, or its officers, agents, or employees, assumes any liability, directly or indirectly, for any loss due to damage to person or property caused by, resulting from, or arising out of design, installation, maintenance, or operation of the proposed equipment.

This permit is not transferable to another person, place, piece or set of equipment. This permit will expire if construction has not begun within two years of its issue date or if construction is suspended for two years.

THIS PERMIT HAS BEEN GRANTED ON THE BASIS OF DESIGN INFORMATION PRESENTED WITH ITS APPLICATION. CHANGES OF DESIGN OR EQUIPMENT MUST BE APPROVED IN ADVANCE BY THE DEPARTMENT.

ASSISTANT ADMINISTRATOR PERMITS AND ENFORCEMENT	DATE March 30, 1992

HWE 0070

PERMIT TO CONSTRUCT

PERMITTEE, PROJECT, AND LOCATION

Chemstar Lime Company
Lime Quarry
Soda Springs, Idaho

PERMIT NUMBER

0420 - 0029

SOURCE

Primary crushing, DC-120

1. SOURCE DESCRIPTION

1.1 Process Description

Run-of-mine metallurgical grade limestone (overall dimension of 36 inches and smaller) is unloaded from 50 ton capacity haul tucks to a run-of-mine feed bin. Limestone from the bin is discharged to scalping screen by a feed system. Ore from the scapling screen is either sent directly to a primary screen feed conveyor belt or diverted to the primary jaw crusher then discharged to the primary screen conveyor belt. Ore from the secondary crusher is also discharged to the primary screen feed conveyor belt.

1.2 Controls

Water spray is used to control emissions resulting from haul truck unloading to run-of-mine feed bin. A Mikropul pulse jet baghouse (Model 1215-10-20) is used to control emissions resulting from the scalping screen, scalping screen discharges, primary crusher, primary crusher discharge and the ore discharge from the secondary crusher to the primary screen feed conveyor belt.

1.3 Stack specifications

The stack associated with the baghouse (DC-120) which controls emissions from primary crushing operations shall meet the following specifications:

Height - 28 feet
Diameter - 1.75 foot
Volume - 8500 ACFM

1.4 Equipment listing

Equipment used in primary crushing:

1.4.1 Run-of-mine bin (120 ton capacity)

ASSISTANT ADMINISTRATOR
PERMITS AND ENFORCEMENT

DATE: March 30, 1992

PERMIT TO CONSTRUCT

PERMITTEE, PROJECT, AND LOCATION

Chemstar Lime Company
Lime Quarry
Soda Springs, Idaho

PERMIT NUMBER

0420 - 0029

SOURCE

Primary crushing, DC-120

1.4.2 Primary crusher feeder
1.4.3 Scalping screen
1.4.4 Primary jaw crusher
1.4.5 Two conveyor belts

2. EMISSION LIMITS

2.1 Primary Crusher Baghouse Stack

2.1.1 Total suspended particulate (TSP) emissions shall not exceed 0.05 grains per dry standard cubic meter as required in 40 CFR 60, Subpart 000, nor shall they exceed the pound per hour (lb/hr) or ton per year (T/yr) values listed in Appendix A.

2.1.2 PM-10 (particulate matter with a mean aerodynamic diameter less than a nominal 10 microns -- 40 CFR 51.100) shall not exceed the pound per hour (lb/hr) or ton per year (T/yr) values listed in Appendix A.

2.1.3 Visible emissions from the primary crusher baghouse shall not exceed 7 percent (%) opacity as required in 40 CFR 60, Subpart 000.

2.2 Fugitive Emissions

Fugitive emissions resulting from primary crushing operations shall be reasonably controlled as required in IDAPA 16.01.0125 and 01252 including, but not limited to using water spray to control fugitive emissions resulting from haul truck unloading.

On and after the sixtieth day after achieving the maximum production rate at which the source will operate, but not later than 180 days after initial startup, the permittee shall not emit fugitive emissions from conveyor belt transfers, rotating grizzly and crusher which exhibit greater than 10 percent (%) opacity as required in 40 CFR 60.672.

ASSISTANT ADMINISTRATOR
PERMITS AND ENFORCEMENT

DATE: March 30, 1992

PERMIT TO CONSTRUCT

PERMITTEE, PROJECT, AND LOCATION

Chemstar Lime Company
Lime Quarry
Soda Springs, Idaho

PERMIT NUMBER

0420 - 0029

SOURCE

Primary crushing, DC-120

3. OPERATING REQUIREMENTS

3.1 Production Limits

The maximum throughput rate to the run-of-mine bin shall not exceed 31,920 tons per month or 367,500 tons per year.

3.2 Pressure drop across baghouse

3.2.1 Equipment shall be installed, operated, and maintained in good working condition, to measure pressure drop across the baghouse.

3.2.2 Pressure drop across the baghouse shall be recorded while performing the source test required in section 4.1. Pressure drop across the baghouse shall be maintained at or above this measurement at all times.

4. MONITORING REQUIREMENTS

4.1 Within sixty (60) days after achieving the maximum production rate at which the source will operate but not later than one hundred eighty (180) days after initial start-up of the source, a performance test shall be conducted to demonstrate compliance with sections 2.1.1 and 2.1.3. The particulate matter and opacity performance test shall be conducted in accordance with 40 CFR 60, Subpart 000. The throughput to the run-of-mine bin shall also be measured and recorded during the performance test.

4.2 Pressure drop across the baghouse shall be monitored and recorded once during each week of operation.

ASSISTANT ADMINISTRATOR
PERMITS AND ENFORCEMENT

DATE: March 30, 1992

PERMIT TO CONSTRUCT

PERMITTEE, PROJECT, AND LOCATION

Chemstar Lime Company
Lime Quarry
Soda Springs, Idaho

PERMIT NUMBER

0420 - 0029

SOURCE

Primary crushing, DC-120

4.3 Throughput to the run-of-mine bin shall be monitored and recorded on a monthly basis.

5. REPORTING REQUIREMENTS

5.1 The performance test data required in section 4.1, including throughput to the run-of-mine bin, visible emission observation data and pressure drop across the baghouse during the performance test shall be reported to the Department within 30 days of performing the test.

5.2 The permittee shall submit the following information to the Department in a yearly report (based on a calendar year and due 30 days after each year):

5.1.1 Tons of throughput to the run-of-mine bin each month.

5.1.2 Results of the weekly baghouse pressure drop monitoring required in section 4.2. The pressure drop recorded while conducting the performance test required in section 4.1 shall also be reported to demonstrate compliance with section 3.2.2.a

ASSISTANT ADMINISTRATOR
PERMITS AND ENFORCEMENT

DATE: March 30, 1992

PERMIT TO CONSTRUCT

PERMITTEE, PROJECT, AND LOCATION

Chemstar Lime Company
Lime Quarry
Soda Springs, Idaho

PERMIT NUMBER

0420 - 0029

SOURCE

Primary screening, DC-123

1. SOURCE DESCRIPTION

1.1 Process Description

Limestone is conveyed at 371 tons per hour to a primary screen. The primary screen discharges either to a secondary crusher, 20 ton capacity surge bin or spalls stockpile conveyor belt. The secondary crusher discharges to a conveyor belt which recirculates ore to the primary crushing system. The surge bin discharges by a vibrating feeder to the first of two "downhill" conveyor belts. The spalls stockpile conveyor belt discharges to a spalls storage pile.

1.2 Controls

Water spray is used to control emissions resulting from the conveyor belt discharge to the spalls stockpile.

A Mikropul pulse jet baghouse (Model 1565-10.2) is used to control emissions from the primary screen feed, primary screen, primary screen discharges and the surge bin discharge.

1.3 Stack Specifications

The stack associated with baghouse (DC-123) which controls emissions from primary screening operations shall meet the following specifications:

Height - 2 feet
Diameter - 1.75 feet
Volume - 10,800 ACFM

1.4 Equipment Listing

Equipment used in primary screening:

1.4.1 Primary screening feed conveyor belt

ASSISTANT ADMINISTRATOR
PERMITS AND ENFORCEMENT

DATE: March 30, 1992

PERMIT TO CONSTRUCT

PERMITTEE, PROJECT, AND LOCATION

Chemstar Lime Company
Lime Quarry
Soda Springs, Idaho

PERMIT NUMBER

0420 - 0029

SOURCE

Primary screening, DC-123

1.4.2 Primary screen
1.4.3 Spalls stockpile feed conveyor belt
1.4.4 Surge bin (20 ton capacity)
1.4.5 Vibrating feeder (sruge bin discharge)
1.4.6 Downhill conveyor belt
2° Crusher . CR-117

2. EMISSION LIMITS

1.2 Primary Screen Baghouse Stack

2.1.1 Total suspended particulate (TSP) emissions shall not exceed 0.05 grains per dry standard cubic meter as required in 40 CFR 60, Subpart 000, nor shall they exceed the pound per hour (lb/hr) or ton per year (T/yr) values listed in Appendix A.

2.1.2 PM-10 (particulate matter with a mean aerodynamic diameter less than a nominal 10 microns -- 40 CFR 51.100) shall not exceed the pound per hour (lb/hr) or ton per year (T/yr) values listed in Appendix A.

2.1.3 Visible emissions from the primary crusher baghouse shall not exceed 7 percent (%) opacity as required in 40 CFR 60, Subpart 000.

2.2 Fugitive Emissions

Fugitive emissions resulting from primary screening operations shall be reasonably controlled as required in IDAPA 16.01.01251 and 01252 including, but not limited to using water spray to control fugitive emissions resulting from the spalls stockpile conveyor belt discharge.

ASSISTANT ADMINISTRATOR
PERMITS AND ENFORCEMENT

DATE: March 30, 1992

PERMIT TO CONSTRUCT

PERMITTEE, PROJECT, AND LOCATION

Chemstar Lime Company
Lime Quarry
Soda Springs, Idaho

PERMIT NUMBER

0420 - 0029

SOURCE

Primary screening, DC-123

On and after the sixtieth day after the maximum production rate at which the source will operate, but not later than 180 days after initial startup fugitive emissions from the primary screen feed conveyor belt, primary screen, surge bin and downhill conveyor belt, shall not exhibit greater than 10 percent (%) opacity as required in 40 CFR 60.672.

3. OPERATING REQUIREMENTS

3.1 Equipment shall be installed, operated, and maintained in good working condition, to measure pressure drop across the baghouse.

3.2 Pressure drop across the baghouse shall be recorded while performing the source test required in section 4.1. Pressure drop across the baghouse shall be maintained at or above this measurement at all times.

4. MONITORING REQUIREMENTS

4.1 Within sixty (60) days after achieving the maximum production rate at which the source will operate but not later than one hundred eighty (180) days after initial start-up of the source, a performance test shall be conducted to demonstrate compliance with sections 2.1.1 and 2.1.3. The particulate matter and opacity performance test shall be conducted in accordance with 40 CFR, Subpart 000.

4.2 Pressure drop across the baghouse shall be monitored and recorded once during each week of operation.

5. REPORTING REQUIREMENTS

5.1 The performance test data required in section 4.1, including visible emission observation data and pressure drop across the

ASSISTANT ADMINISTRATOR
PERMITS AND ENFORCEMENT

DATE: March 30, 1992

PERMIT TO CONSTRUCT

PERMITTEE, PROJECT, AND LOCATION

Chemstar Lime Company
Lime Quarry
Soda Springs, Idaho

SOURCE

PERMIT NUMBER

0420 - 0029

Primary screening, DC-123

baghouse during the performance test shall be reported to the Department within 30 days of performing the test.

5.2 The permittee shall submit the results of the weekly baghouse pressure drop monitoring required in section 4.2 in a yearly report (based on a calendar year and due 30 days after each year). The pressure drop recorded while conducting the performance test required in section 4.1 shall also be reported to demonstrate compliance with section 3.2.

ASSISTANT ADMINISTRATOR
PERMITS AND ENFORCEMENT

DATE: March 30, 1992

PERMIT TO CONSTRUCT

PERMITTEE, PROJECT, AND LOCATION

Chemstar Lime Company
Lime Quarry
Soda Springs, Idaho

PERMIT NUMBER

0420 - 0029

SOURCE

"Downhill" belt conveying system, DC-126 & 129

1. SOURCE DESCRIPTION

1.1 Process Description

Crushed and screened limestone is transported approximately one half mile from the quarry to a primary stockpile. The conveying system consists of two conveyor belts and a stacker conveyor.

1.2 Controls

Water spray is used to control emissions resulting from the stacker conveyor belt discharge to the primary storage pile. Each conveyor belt to conveyor belt transfer (2 transfers) is controlled by an individual baghouse.

1.3 Stack Specifications

1.3.1 The stack associated with the Mikropul pulse jet baghouse (Model 255-10-30) which controls emissions from the transfer of limestone from conveyor belt #1 to conveyor belt #2 shall meet the following specifications:

Height - 3 feet
Diameter - 0.84 feet
Volume - 1,500 ACFM

1.3.2 The stack associated with the Mikropul pulse jet baghouse (Model 255-10-30) which controls emissions from the transfer of limestone from conveyor belt #2 to the primary stockpile stacker conveyor shall meet the following specifications:

Height - 3 feet
Diameter - 0.84 feet
Volume - 1,500 ACFM

1.4 Equipment Listing

ASSISTANT ADMINISTRATOR
PERMITS AND ENFORCEMENT

DATE: March 30, 1992

PERMIT TO CONSTRUCT

PERMITTEE, PROJECT, AND LOCATION

Chemstar Lime Company
Lime Quarry
Soda Springs, Idaho

PERMIT NUMBER

0420 - 0029

SOURCE

"Downhill" belt conveying system, DC-126 & 129

1.4.1 Two conveyor belts
1.4.2 One stacker conveyor belt

2. EMISSION LIMITS

2.1 Baghouse Stacks DC-126 & 129

2.1.1 Total suspended particulate (TSP) emissions shall not exceed 0.05 grains per dry standard cubic meter from each baghouse stack as required in 40 CFR 60, Subpart 000, nor shall they exceed the pound per hour (lb/hr) or ton per year (T/yr) values listed in Appendix A.

2.1.2 PM-10 (particulate matter with a mean aerodynamic diameter less an a nominal 10 microns -- 40 CFR 51.100) shall not exceed the pound per hour (lb/hr) or ton per year (T/yr) values listed in Appendix A.

2.1.3 Visible emissions from each baghouse stack shall not exceed 7 percent (%) opacity as required in 40 CFR 60, Subpart 000.

2.2 Fugitive Emissions

Fugitive emissions resulting from the "downhill" conveying system shall be reasonably controlled as required in IDAPA 16.01.01251 and 01252 including but not limited to using water spray to control fugitive emissions resulting from the stacker conveyor belt discharge to the primary stockpile.

ASSISTANT ADMINISTRATOR
PERMITS AND ENFORCEMENT

DATE: March 30, 1992

PERMIT TO CONSTRUCT

PERMITTEE, PROJECT, AND LOCATION

Chemstar Lime Company
Lime Quarry
Soda Springs, Idaho

PERMIT NUMBER

0420 - 0029

SOURCE

"Downhill" belt conveying system, DC-126 & 129

On and after the sixtieth day after achieving the maximum production rate at which the source will operate, but not later than 180 days after initial startup, the permittee shall not emit fugitive emissions from conveyor belt transfer points (except transfers to storage piles) which exhibit greater than 10 percent (%) opacity as required in 40 CFR 60.672.

3. OPERATING REQUIREMENTS

3.1 Production Limits

The maximum limestone conveying rate of the "downhill" belt conveying system shall not exceed 37,212 tons per month or 429,369 tons per year.

3.2 Pressure drop across baghouses

3.2.1 Equipment shall be installed, operated, and maintained in good working condition, to measure pressure drop across each baghouse.

3.2.2 Pressure drop across the baghouses shall be recorded while performing the source tests required in section 4.1. Pressure drop across the baghouses shall be maintained at or above these measurements at all times.

4. MONITORING REQUIREMENTS

4.1 Within sixty (60) days after achieving the maximum production rate at which the source will operate but not later than one hundred eighty (180) days after initial start-up of the source, performance tests shall be conducted to demonstrate compliance with 2.1.1 and 2.1.3. The particulate matter and opacity performance tests shall be conducted in accordance with 40 CFR 60, Subpart 000. The limestone conveying rate of the "downhill" belt conveying system shall also be measured and recorded during the performance test.

ASSISTANT ADMINISTRATOR
PERMITS AND ENFORCEMENT

DATE: March 30, 1992

PERMIT TO CONSTRUCT

PERMITTEE, PROJECT, AND LOCATION

Chemstar Lime Company
Lime Quarry
Soda Springs, Idaho

PERMIT NUMBER

0420 - 0029

SOURCE

"Downhill" belt conveying system, DC-126 & 129

4.2 Pressure drop across the baghouses shall be monitored and recorded once during each week of operation.

4.3 The tons of limestone conveyed by the "downhill" belt conveying system shall be monitored and recorded each month.

5 REPORTING REQUIREMENTS

5.1 The performance test data required in section 4.1, including the conveying rate of the "downhill" belt conveying system, visible emission observation data and pressure drop across the baghouses during the performance tests shall be reported to the Department within 30 days of performing the tests.

5.2 The permittee shall submit the following information to the Department in a yearly report (based on a calendar year and due 30 days after each year):

5.2.1 Tons of limestone conveyed by the "downhill" belt conveying system each month.

5.2.2 Results of the weekly baghouse pressure drop monitoring required in 4.2. The pressure drops recorded while conducting the performance tests required in section 4.1 shall also be reported to the demonstrate compliance with section 3.2.2.

ASSISTANT ADMINISTRATOR
PERMITS AND ENFORCEMENT

DATE: March 30, 1992

PERMIT TO CONSTRUCT

PERMITTEE, PROJECT, AND LOCATION

Chemstar Lime Company
Lime Quarry
Soda Springs, Idaho

PERMIT NUMBER

0420 - 0029

SOURCE

Secondary & Tertiary Screening, DC-230 & DC-303

1. SOURCE DESCRIPTION

1.1 Process Description

Limestone from the primary stockpile is transported by the secondary screen feed conveyor belt to the secondary screen. Overflow from the secondary screen which is between 3" and 6" is discharged to a conveyor belt which feeds a stacker conveyor belt which feeds a 3"- 6" stone stockpile. Underflow from the 3" - 6" stockpile is transported by two conveyor belts to a tertiary screen. Overflow from the tertiary screen which is greater than 1" is transported by conveyor belt to the lime kiln.

Overflow from the secondary screen which is between 1" and 3" is discharged to a conveyor belt which feeds a stacker conveyor belt which feeds a 1" - 3" stone stockpile. Underflow from the 1" - 3" stockpile is transported by two conveyor belts to a tertiary screen. Overflow from the tertiary screen which is greater than 1" is transported by conveyor belt to the lime kiln.

Underflow from the secondary and tertiary screens which is less than 1" is transported by two conveyor belts to a spalls storage bin.

1.2 Controls

Water spray is used to control emissions from the following sources: primary stockpile underflow; 1" - 3" and 3" - 6" stockpile underflows; 1" - 3" and 3" - 6" stockpile underflow converyor belts discharge to the tertiary screen feed conveyor belts; 1" - 3" and 3" - 6" stacker conveyor belt loading points; and secondary and tertiary underflow conveyor belt discharge to the spalls storage bin feed conveyor belt.

A Mikropul pulse jet baghouse (Model 1805-10-20) is used to control emissions from the following sources: primary stockpile underflow conveyor belt discharge to the secondary screen; secondary screen;

PERMIT TO CONSTRUCT

PERMITTEE, PROJECT, AND LOCATION

Chemstar Lime Company
Lime Quarry
Soda Springs, Idaho

PERMIT NUMBER

0420 - 0029

SOURCE

Secondary & Tertiary Screening, DC-230 & DC-303

1" - 3" and 3" - 6" secondary screen overflows to respective conveyor belts; tertiary screen feed conveyor belts discharge; tertiary screen; and tertiary screen discharges.

A Mikropul pulse jet baghouse (Model DLMV9/15) is used to control emissions from the lime kiln feed conveyor belt discharge to the lime kiln.

1.3 Stack specifications

1.3.1 The stack associated with the baghouse (DC-230) which controls emissions from secondary and tertiary screening operations shall meet the following specifications:

Height - 3 feet
Diameter - 1.92 feet
Volume - 12,250 ACFM

1.3.2 The stack associated with the baghouse (DC-303) which controls emissions from the lime kiln feed conveyor belt discharge shall meet the following specifications:

Height - 86 feet
Diameter - 0.74 feet
Volume - 4,600 ACFM

1.4 Equipment listing

Equipment used in secondary and tertiary screening operations:

1.4.1 Ten conveyor belts
1.4.2 Two stacker conveyor belts
1.4.3 Secondary screen
1.4.4 Tertiary screen

2. EMISSION LIMITS

ASSISTANT ADMINISTRATOR
PERMITS AND ENFORCEMENT

DATE: March 30, 1992

PERMIT TO CONSTRUCT

PERMITTEE, PROJECT, AND LOCATION

Chemstar Lime Company
Lime Quarry
Soda Springs, Idaho

PERMIT NUMBER

0420 - 0029

SOURCE

Secondary & Tertiary Screening, DC-230 & DC-303

2.1 Secondary Crushing and Screening Baghouse Stack

2.1.1 Total suspended particulate (TSP) emissions shall not exceed 0.05 grains per dry standard cubic meter from each baghouse stack as required in 40 CFR 60, Subpart 000, nor shall they exceed the pound per hour (lb/hr) or ton per year (T/yr) values listed in Appendix A.

2.1.2 PM-10 (particulate matter with a mean aerodynamic diameter less an a nominal 10 microns -- 40 CFR 51.100) shall not exceed the pound per hour (lb/hr) or ton per year (T/yr) values listed in Appendix A.

2.1.3 Visible emissions from the secondary and tertiary screening operations baghouse stack shall not exceed 7 percent (%) opacity as required in 40 CFR 60, Subpart 000.

2.2 Fugitive Emissions

Fugitive emissions resulting from secondary crushing and screening operations shall be reasonably controlled as required in IDAPA 16.01.01251 and 01252 including, but not limited to using water spray to control fugitive emissions resulting from the following sources: primary stockpile underflow; 1" - 3" and 3" - 6" stockpile underflows; 1" - 3" and 3" - 6" stockpile underflow converyor belts discharge to the tertiary screen feed conveyor belts; 1" - 3" and 3" - 6" stacker conveyor belt loading points; and secondary and tertiary underflow conveyor belt discharge to the spalls storage bin feed conveyor belt.

On and after the sixtieth day after achieving the maximum production rate at which the source will operate, but not later than 180 days after initial startup, the permittee shall not emit fugitive emissions from the secondary and tertiary screening

PERMIT TO CONSTRUCT

PERMITTEE, PROJECT, AND LOCATION

Chemstar Lime Company
Lime Quarry
Soda Springs, Idaho

PERMIT NUMBER

0420 - 0029

SOURCE

Secondary & Tertiary Screening, DC-230 & DC-303

operations (except transfers to storage piles) which exhibit greater than 10 percent (%) opacity as required in 40 CFR 60.672.

3. OPERATING REQUIREMENTS

3.1 Production limits

The maximum limestone conveying rate of the secondary screen feed conveyor belt shall not exceed 8,060 tons per month or 93,000 tons per year.

3.2 Pressure drop across baghouse

3.2.1 Equipment shall be installed, operated and maintained in good working condition, to continuously measure pressure drop across the baghouses.

3.2.2 Pressure drop across the baghouses shall be recorded while performing the source test required in section 4.1. Pressure drop across the baghouse shall be maintained at or above this measurement at all times.

4. MONITORING REQUIREMENTS

4.1 Within sixty (60) days after achieving the maximum production rate at which the source will operate but not later than one hundred eighty (180) days after initial start-up of the source, performance tests shall be conducted to demonstrate compliance with sections 2.1.1 and 2.1.3. The particulate matter and opacity performance tests shall be conducted in accordance with 40 CFR 60, Subpart 000.

4.2 Pressure drop across the baghouses shall be monitored and recorded once during each week of operation.

ASSISTANT ADMINISTRATOR
PERMITS AND ENFORCEMENT

DATE: March 30, 1992

PERMIT TO CONSTRUCT

PERMITTEE, PROJECT, AND LOCATION

Chemstar Lime Company
Lime Quarry
Soda Springs, Idaho

PERMIT NUMBER

0420 - 0029

SOURCE

Secondary & Tertiary Screening, DC-230 & DC-303

4.3 The tons of limestone conveyed by the secondary screen feed conveyor belt shall be monitored and recorded each month.

5. REPORTING REQUIREMENTS

5.1 The performance test data required in section 4.1, including visible emission observation data and pressure drop across the baghouse during the performance test shall be reported to the Department within 30 days of performing the test.

5.2 The permittee shall submit the following information to the Department in an annual report (based on a calendar year and due by January 30th of each year):

5.2.1 Limestone conveyed by the secondary screen feed conveyor belt each month (in tons).

5.2.2 Results of the weekly baghouse pressure drop monitoring required in section 4.2. The pressure drop recorded while conducting the performance test required in section 4.1 shall also be reported to demonstrate compliance with section 3.2.2.

ASSISTANT ADMINISTRATOR
PERMITS AND ENFORCEMENT

DATE: March 30, 1992

PERMIT TO CONSTRUCT

PERMITTEE, PROJECT, AND LOCATION

Chemstar Lime Company
Lime Quarry
Soda Springs, Idaho

PERMIT NUMBER

0420 - 0029

SOURCE

Vertical Lim Kiln, DC-316

1. SOURCE DESCRIPTION

1.1 Process Description

Limestone is fed to the dual shaft natural gas fired lime kiln by a system consisting of a conveyor belt, reversible direction conveyor belt, two vibrating feeders and a weigh hopper. Limestone (calcium carbonate) is converted to lime (calcium oxide) by the high temperature of the kiln at a maximum rate of twenty five tons per hour.

1.2 Controls

Emissions from the kiln are controlled by a Fuller pulse jet baghouse (Model 448-3-10).

1.3 Stack Specifications

The stack associated with the baghouse (DC - 316) which controls emissions from the kiln shall meet the following specifications:

Height - 139 feet
Diameter - 4.0 feet
Volume - 59,460 ACFM

1.4 Equipment Listing

Equipment listing:

1.4.1 Conveyor belt
1.4.2 Two vibrating feeders
1.4.3 Weigh hopper
1.4.4 Reversible conveyor belt

ASSISTANT ADMINISTRATOR
PERMITS AND ENFORCEMENT

DATE: March 30, 1992

PERMIT TO CONSTRUCT

PERMITTEE, PROJECT, AND LOCATION

Chemstar Lime Company
Lime Quarry
Soda Springs, Idaho

PERMIT NUMBER

0420 - 0029

SOURCE

Vertical Lim Kiln, DC-316

2. EMISSION LIMITS

2.1 Vertical Kiln Baghouse Stack

2.1.1 Total suspended particulate (TSP) emissions shall not exceed the pound per hour (lb/hr) or ton per year (T/yr) values listed in Appendix A.

2.1.2 PM-10 (particulate matter with a mean aerodynamic diameter less than a nominal 10 microns -- 40 CFR 51.100) emissions shall not exceed the pound per hour (lb/hr) or ton per year (T/yr) values listed in Appendix A.

2.1.3 Nitrogen oxides (NOx) emissions shall not exceed the pound per hour or ton per year (T/yr) values listed in Appendix A.

2.1.4 Sulfur dioxide (SO_2) emissions shall not exceed the pound per hour or ton per year (T/yr) values listed in Appendix A.

2.1.5 Carbon monoxide (CO) emissions shall not exceed the pound per hour or ton per year (T/yr) values listed in Appendix A.

2.1.6 Visible emissions from the vertical kiln baghouse stack shall not exceed 20 percent (%) opacity for a period or periods aggregating more than 3 minutes in any 60 minute period as required in IDAPA 16.01.01201 (Rules and Regulations for the Control of Air Pollution in Idaho) using the Department's "Procedures Manual for Air Pollution Control."

ASSISTANT ADMINISTRATOR
PERMITS AND ENFORCEMENT

DATE: March 30, 1992

PERMIT TO CONSTRUCT

PERMITTEE, PROJECT, AND LOCATION

Chemstar Lime Company
Lime Quarry
Soda Springs, Idaho

PERMIT NUMBER

0420 - 0029

SOURCE

Vertical Lim Kiln, DC-316

2.2 Fugitive Emissions

2.2.1 Fugitive emissions resulting from the kiln feed system shall be reasonably controlled as required in IDAPA 16.01.01251 and 01252.

2.2.2 No visible fugitive emissions shall emanate from the vertical kiln building, as required in 40 CFR 60.672.

2.2.3 Emissions passing through a building vent shall not exhibit greater than 7 percent (%) opacity and shall not contain particulate matter in excess of 0.05 grains per dry standard cubic meter as required in 40 CFR Part 60, Subpart 000.

2.2.4 Fugitive emissions from the vertical kiln feed system shall not exceed 10 percent (%) opacity as required in 40 CFR 60.672.

3. OPERATING REQUIREMENTS

3.1 Production Limits

The maximum throughput rate to the vertical kiln shall not exceed 37,200 tons per month or 403,200 tons per year.

3.2 Pressure drop across baghouse

3.2.1 Equipment shall be installed, operated, and maintained in good working condition, to continuously measure pressure drop across the baghouse.

3.2.2 Pressure drop across the baghouse shall be recorded while performing the source test required in section 4.1. Pressure drop across the baghouse shall be maintained at

PERMIT TO CONSTRUCT

PERMITTEE, PROJECT, AND LOCATION

Chemstar Lime Company
Lime Quarry
Soda Springs, Idaho

PERMIT NUMBER

0420 - 0029

SOURCE

Vertical Lim Kiln, DC-316

or above this measurement at all times.

4. MONITORING REQUIREMENTS

4.1 Within sixty (60) days after achieving the maximum production rate at which the source will operate but not later than one hundred eighty (180) days after initial start-up of the source, a performance test shall be conducted to demonstrate compliance with sections 2.1.1, 2.1.3, 2.1.4, 2.1.5 and 2.1.6. The throughput to the kiln shall also be measured and recorded during the performance test.

4.2 Pressure drop across the baghouse shall be monitored and recorded once during each week of operation.

4.3 Monthly throughput to the vertical kiln shall be monitored and recorded.

4.4 If visible emissions are observed passing through a vent on the vertical kiln building a performance test shall be conducted in accordance with 40 CFR 60.675 to demonstrate compliance with section 2.2.2.

5. REPORTING REQUIREMENTS

5.1 The performance test data required in section 4.1, including visible emission observation data and pressure drop across the baghouse during the performance test shall be reported to the Department within 30 days of performing the test.

5.2 The permittee shall submit the following information to the Department in an annual report (based on a calendar year and due by January 30th of each year):

5.1.1 Throughput to the vertical kiln each month (in tons).

ASSISTANT ADMINISTRATOR
PERMITS AND ENFORCEMENT

DATE: March 30, 1992

PERMIT TO CONSTRUCT

PERMITTEE, PROJECT, AND LOCATION

Chemstar Lime Company
Lime Quarry
Soda Springs, Idaho

PERMIT NUMBER

0420 - 0029

SOURCE

Vertical Lim Kiln, DC-316

5.1.2 Results of the weekly baghouse pressure drop monitoring required in section 4.2. The pressure drop recorded while conducting the performance test required in section 4.1 shall also be reported to demonstrate compliance with section 3.2.2.

ASSISTANT ADMINISTRATOR
PERMITS AND ENFORCEMENT

DATE: March 30, 1992

PERMIT TO CONSTRUCT

PERMIT NUMBER

0420 - 0029

PERMITTEE, PROJECT, AND LOCATION

Chemstar Lime Company
Lime Kiln
Soda Springs, Idaho

SOURCE

Lime handling, DC-332, 504, 518, 540, 531, 537

1. SOURCE DESCRIPTION

1.1 Process Description

Lime is discharged from the vertical kiln to a conveyor belt which transports the lime to a roll crusher. Two bucket elevators transport material from the roll crusher to a product screen which feeds three lime bins. The lime bins discharge to a conveyor belt which feeds a truck loadout spout.

Lime dust from the baghouse which controls emissions from the vertical kiln (DC-316) is transported by three screw conveyors to a bucket elevator which feeds a lime dust bin. Lime dust is discharged from the dust bin either by a loadout spout or pug mill (wet process).

1.2 Controls

Six baghouses are used to control emissions from lime handling operations.

1.2.1 Baghouse DC-504 controls emissions from lime discharge from the vertical kiln to the conveyor belt which feeds the roll crusher.

1.2.2 Baghouse DC-537 controls emissions from the roll crusher and the two bucket elevator feeds.

1.2.3 Baghouse DC-518 controls emissions from the two bucket elevator discharges, the product screen and the three lime bin feeds.

1.2.4 Baghouse DC-540 controls emissions from the three lime bin discharges to the conveyor belt which feeds the truck loadout spout.

ASSISTANT ADMINISTRATOR
PERMITS AND ENFORCEMENT

DATE: March 30, 1992

PERMIT TO CONSTRUCT

PERMITTEE, PROJECT, AND LOCATION

Chemstar Lime Company
Lime Kiln
Soda Springs, Idaho

PERMIT NUMBER

0420 - 0029

SOURCE

Lime handling, DC-332, 504, 518, 540, 531, 537

1.2.5 Baghouse DC-531 controls emissions from the truck loadout spout.

1.2.6 Baghouse DC-332 controls emissions from the lime dust bucket elevator and lime dust bin feed and discharge.

1.3 Stack Specifications

Following are the stack specifications that the lime systems baghouses shall meet:

Baghouse	Height (ft)	Diameter (ft)	Volume (ACFM)
504	32	0.74	1500
537	30	1.08	3000
518	89	1.58	7600
540	3	0.92	2000
531	27	1.08	2500
332	46	1.53	6600

1.4 Equipment Listing

Equipment used in lime dust handling:

1.4.1 Six screw conveyors
1.4.2 Bucket elevator
1.4.3 Dust bin (60 ton capacity)
1.4.4 Pug mill
1.4.5 Loadout spout

ASSISTANT ADMINISTRATOR
PERMITS AND ENFORCEMENT

DATE: March 30, 1992

PERMIT TO CONSTRUCT

PERMITTEE, PROJECT, AND LOCATION

Chemstar Lime Company
Lime Kiln
Soda Springs, Idaho

PERMIT NUMBER

0420 - 0029

SOURCE

Lime handling, DC-332, 504, 518, 540, 531, 537

Equipment used in lime handling:

1.4.6	Two conveyor belts
1.4.7	Roll crusher
1.4.8	Two bucket elevators
1.4.9	Product screen
1.4.10	Three lime bins (750 ton capacity)
1.4.11	Loadout spout

2. EMISSION LIMITS

2.1 Lime Handling Systems Baghouse Stacks

2.1.1 Total suspended particulate (TSP) emissions from the baghouse stacks listed in section 1.2 shall not exceed the pound per hour (lb/hr) or ton per year (T/yr) values listed in Appendix A.

2.1.2 PM-10 (particulate matter with a mean aerodynamic diameter less than a nominal 10 microns -- 40 CFR 51.100) emissions from the baghouse stacks listed in section 1.2 shall not exceed the pound per hour (lb/hr) or ton per year (T/yr) values listed in Appendix A.

2.1.3 Visible emissions from each baghouse stack listed in section 1.2 shall not exceed 20 percent (%) opacity for a period or periods aggregating more than 3 minutes in any 60 minute period as required in IDAPA 16.01.01201 (Rules and Regulations for the Control of Air Pollution in Idaho) using the Department's "Procedures Manual for Air Pollution Control."

2.2 Fugitive Emissions

ASSISTANT ADMINISTRATOR
PERMITS AND ENFORCEMENT

DATE: March 30, 1992

PERMIT TO CONSTRUCT

PERMIT NUMBER

0420 - 0029

PERMITTEE, PROJECT, AND LOCATION

Chemstar Lime Company
Lime Kiln
Soda Springs, Idaho

SOURCE

Lime handling, DC-332, 504, 518, 540, 531, 537

Fugitive emission resulting from the lime handling system shall be reasonably controlled as required in IDAPA 16.01.01251 and 01252.

3. OPERATING REQUIREMENTS

3.1 Production Limits

The maximum lime production from the bottom of the vertical kiln shall not exceed 18,600 tons per month or 201,600 tons per year.

3.2 Pressure across baghouses

Equipment shall be installed, operated, and maintained in good working condition, to continuously measure pressure drop across each baghouse listed in section 1.2.

3.3 Baghouse maintenance

Maintenance shall be performed on the baghouses listed in section 1.2 if visible emissions exceed 10 percent (%) opacity for 3 minutes aggregate in any 60 minute period, as determined using those methods described in section 2.1.3.

4. MONITORING REQUIREMENTS

4.1 Monthly production of the vertical kiln shall be monitored and recorded.

5. REPORTING REQUIREMENTS

5.1 The permittee shall submit an annual report of lime produced from the bottom of the vertical kiln each month. The report shall be based on a calendar year and is due by January 30th of each year.

ASSISTANT ADMINISTRATOR
PERMITS AND ENFORCEMENT

DATE: March 30, 1992

Appendix "B"

(AET Pretest Protocol)

American Environmental Testing Company Inc.

801-266-7111

AMERICAN ENVIRONMENTAL TESTING COMPANY, INC.

565 South Birch Drive
Spanish Fork, Utah 84660
(801) 266-7111

PRETEST INFORMATION FORM AND ATTACHMENTS

January 7, 1993

SOURCE INFORMATION

Facility Name: Chemstar Lime Company

Units to be Tested:
1. DC-120
2. DC-123
3. DC-126
4. DC-129
5. DC-230 — 303 included
6. DC-316

Mailing Address: P.O. Box 88, Bancroft, Idaho 83217

Plant Location: 1880 10 Mile Road, Bancroft, Idaho 83217

Phone: (208) 648-7385

Plant Contact: Mr. Stewart Schasteen

Test Location: End of January, 1993

Test Date: Not Yet Determined

CONTRACTOR OR TEST FIRM

Name: American Environmental Testing, Company, Inc.

Address: 565 South Birch Drive, Spanish Fork, Utah, 84660

Phone: (801) 266-7111

Contact: V. Brent Benson, Technical Director

EPA METHODS REQUIRED

A. Stack Velocity and Flow Rate
   1. Reference Method: EPA Method 2 — All Stacks

B. Gas Analysis
   1. Reference Method: EPA Method 3 — All Stacks

C. Moisture Content
   1. Reference Method: EPA Method 4 — All Stacks

D. Particulate
   1. Reference Method: EPA Method 5 — All Stacks

E. Sulfur Dioxides
   1. Reference Method: EPA Method 6C — Stack No. 6

F. Nitrogen Oxides
   1. Reference Method: EPA Method 7E — Stack No. 6

G. Visible Opacity Emissions
   1. Reference Method: EPA Method 9 — All Stacks

H. Carbon Monoxide
   1. Reference Method: EPA Method 10 — Stack No. 6

SAMPLE TRAIN AND ANALYSIS INFORMATION

A. An EPA Method 5 sample train will be employed to perform the above referenced testing. A stainless steel probe liner will be used and maintained at a temperature of 248° ± 25°F for the duration of the test. The filter holder will also be kept at a temperature of 248° ± 25°F. The first two (2) impingers will contain 100 mils of distilled water, the third impinger will be left empty, and the fourth will contain a known amount of silica gel. All impingers will be weighed before and after each test to determine the moisture content of the gases. The impinger bath will be maintained at a temperature lower than 68°F to condense stack moisture.

PS
can't go over
the 250°F

B. A binderless glass fiber filter will be employed as the capture media for particulate emissions. The probe, nozzle, and glassware will be washed with AR grade acetone. The acetone will then be evaporated and weighed. The catch will be added to the filter weight and used in the emissions calculation. All laboratory analysis will done on site.

1. Figure I is a schematic of the sample train to be used.
2. Figure II is a schematic of the $CO/NO_x/SO_2$ sample train.
3. Figure III is a schematic of the NDIR analyzers used for CO.
4. Figure IV shows the sampling system in relation to the test stack.

CALIBRATION DATA AND SAMPLE CALCULATIONS

The EPA and State agencies require various calibrations for specific items included in this sample train. The current calibration data is included in Appendix "A". A sample of all field data forms will be made available at the job site. Sample calculations are included in Appendix "A". EPA Protocol 1 certification sheets for all gas standards to be used for these tests are included in this appendix also.

FIGURE I.

EPA Method 5 Sample Train.

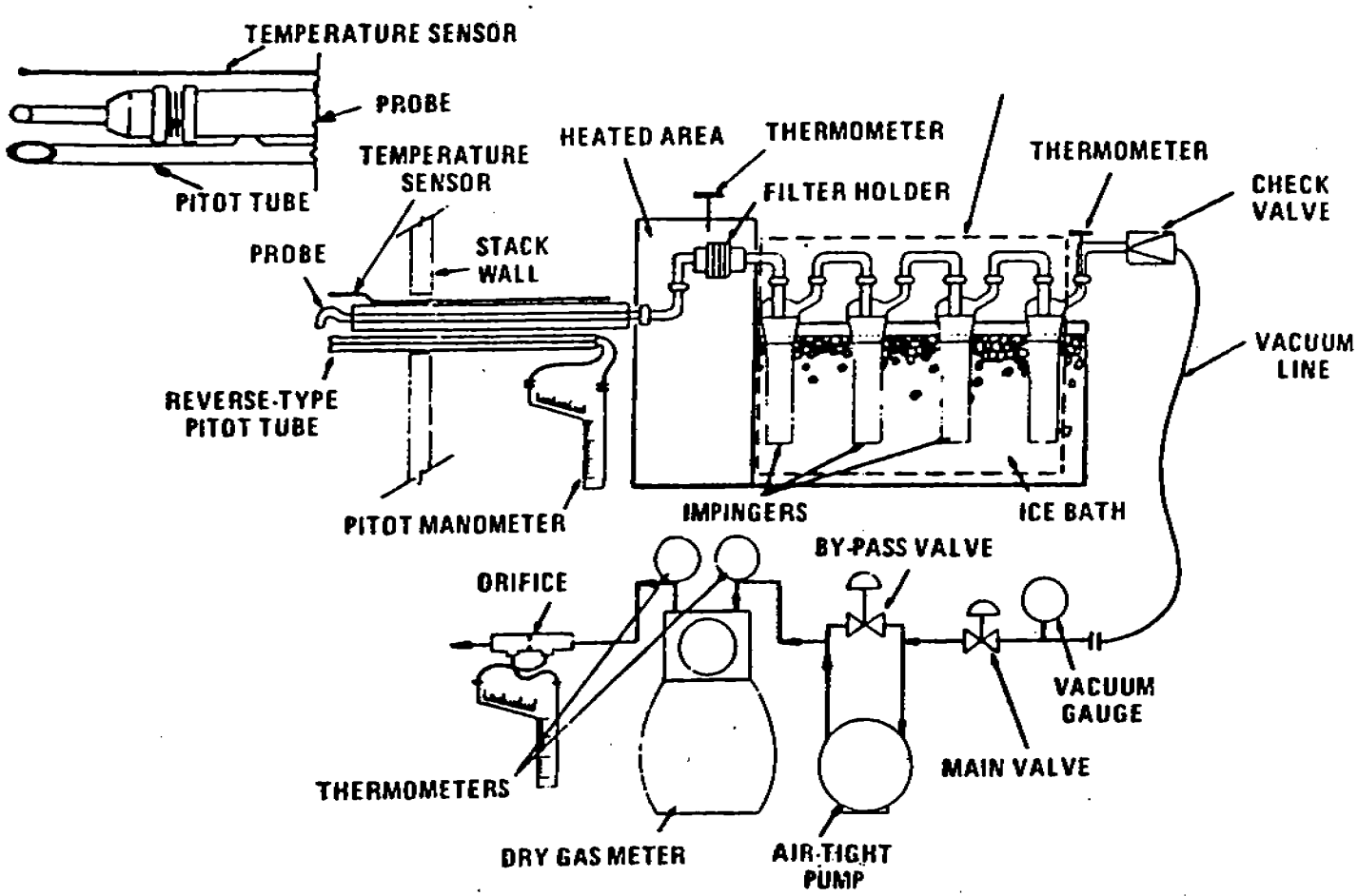

American Environmental Testing Company, Inc.
565 South Birch Drive
Spanish Fork, Utah 84660
(801) 266-7111

Figure II

(CEM Sample Train)

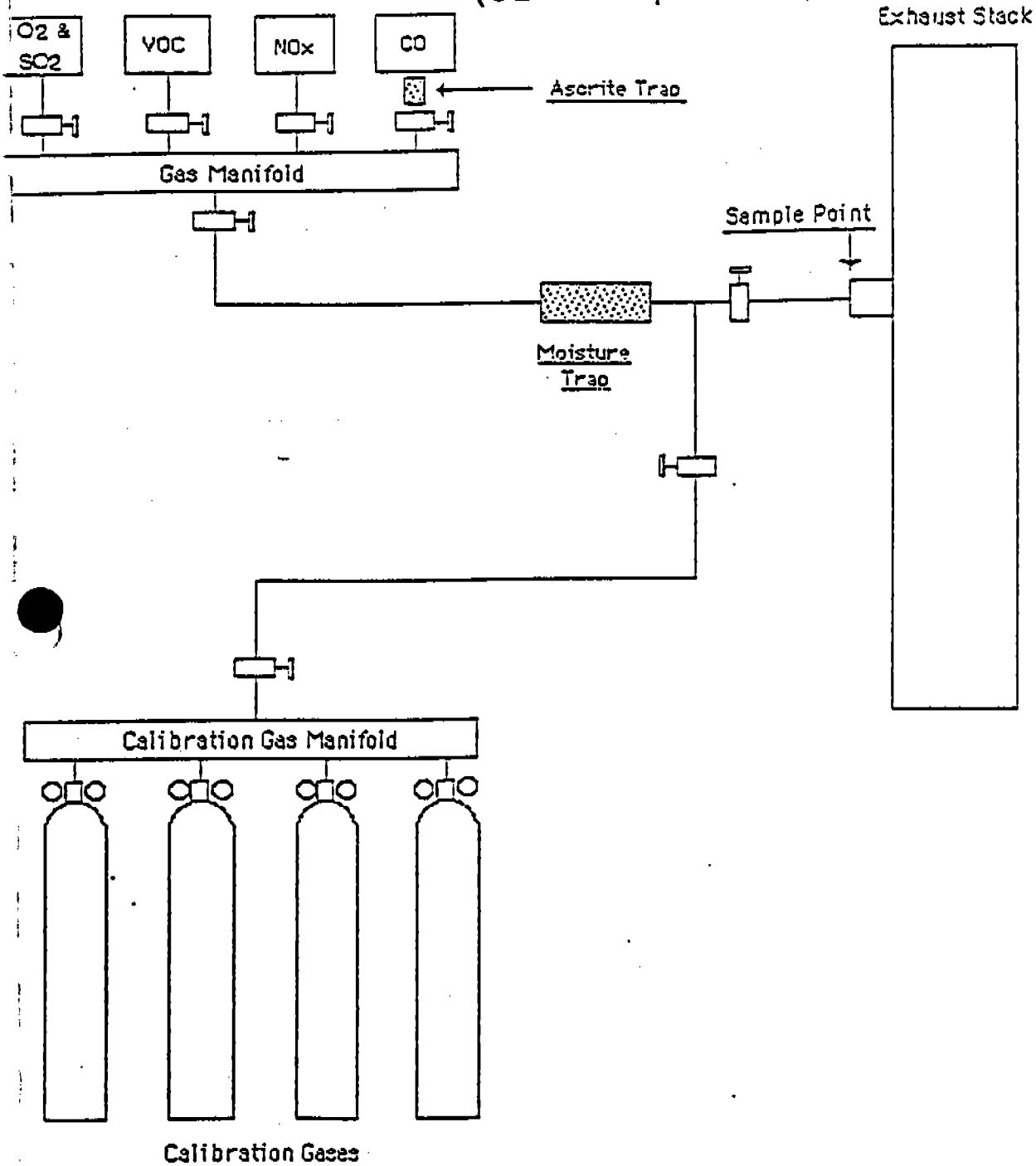

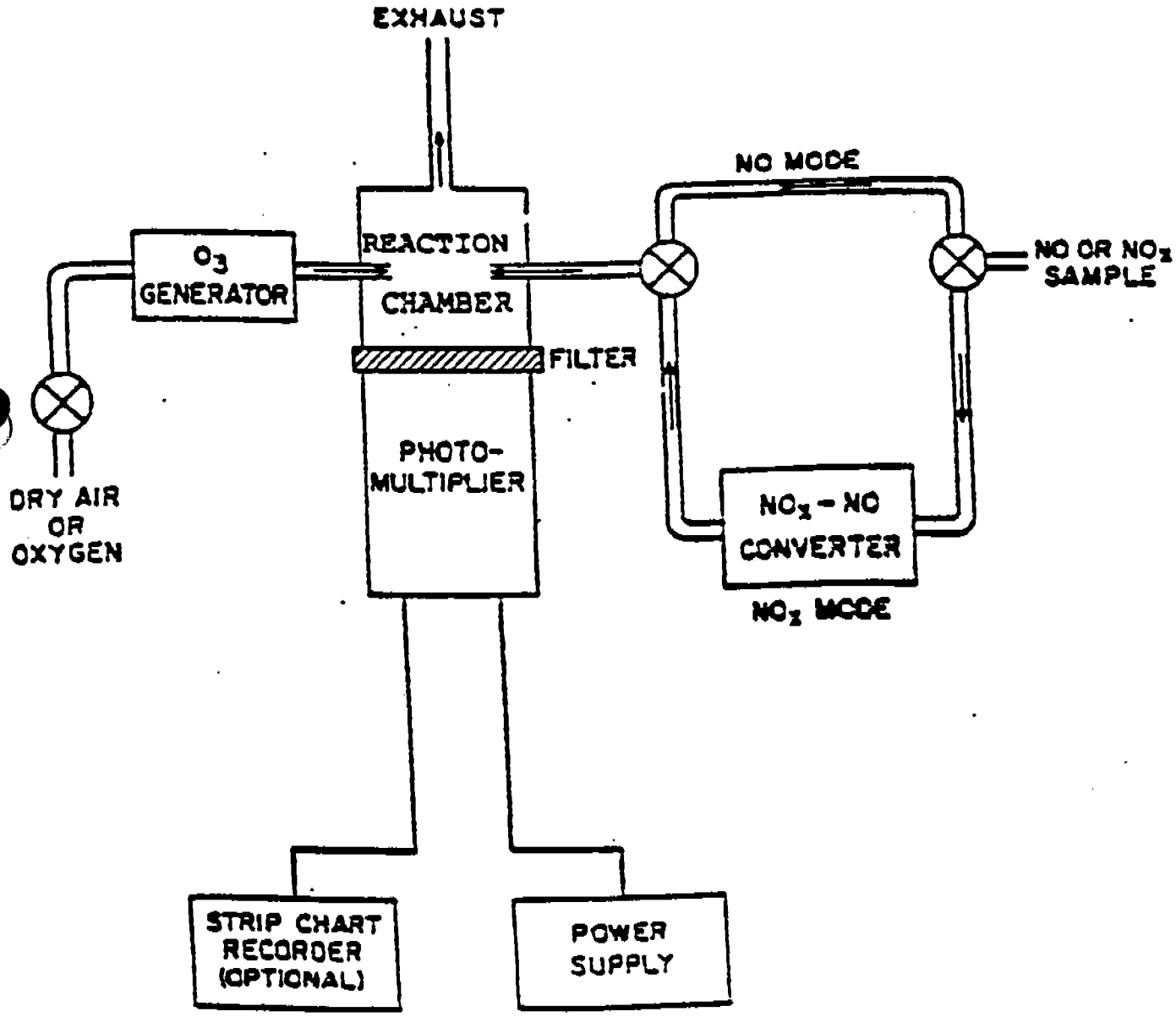

Figure III - NO/NO_x Chemiluminescent Analyzer

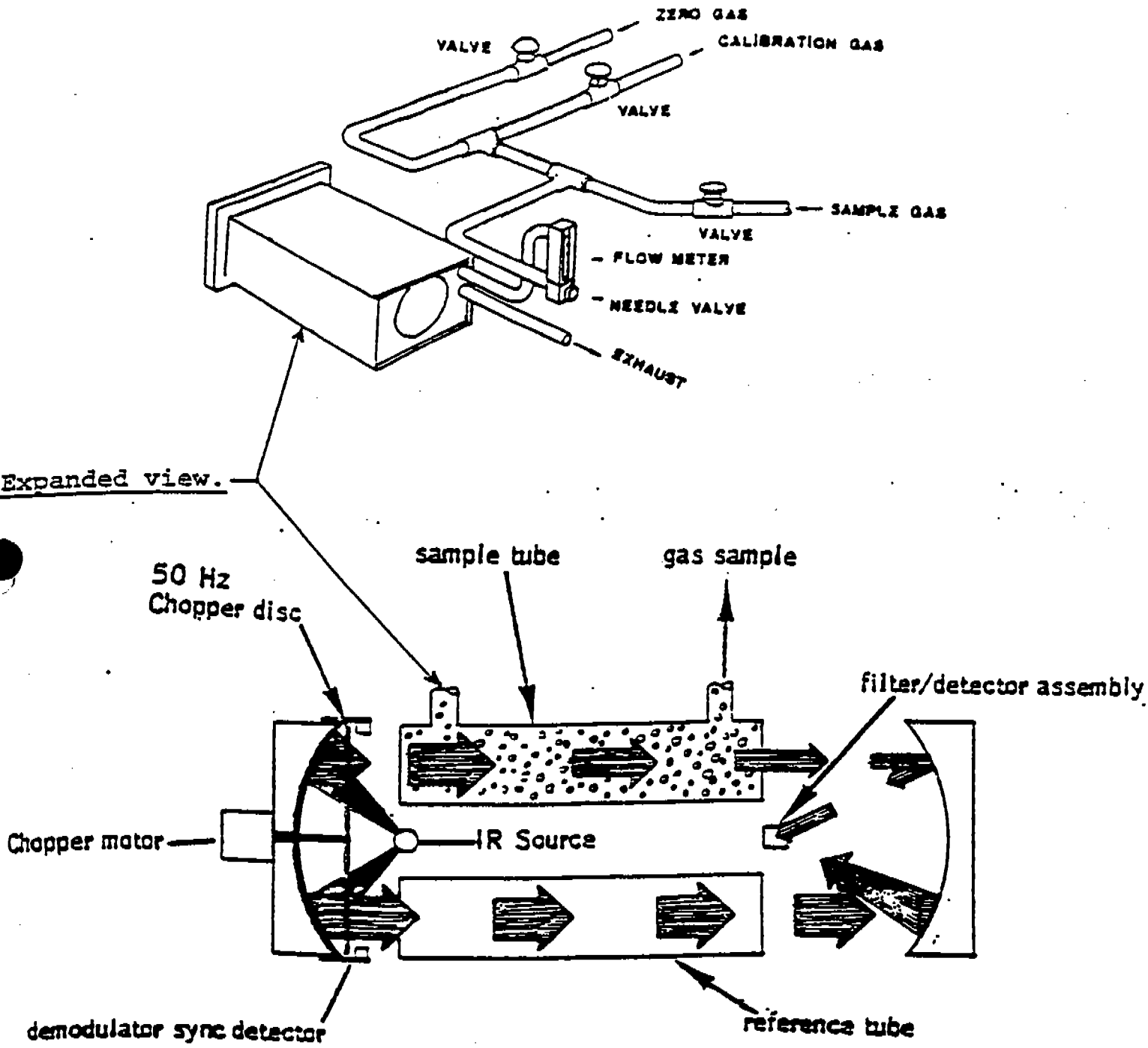

Figure IV - CO Non-Dispersive Infrared Analyzer

REFERENCE METHODS

The methods that will be employed are found in 40 CFR 60 - Appendix A, and the EPA "Quality Assurance Handbook for Air Pollution Measurement Systems". Any deviation from these methods will first be approved by the administrator on site.

STACK SCHEMATIC AND TRAVERSE POINT LOCATIONS

Attached are the schematics showing plan and elevation of ducting and stack arrangements including sample port poitions relative to upstream and downstream disturbances. Also included are cross-sectional sketches of the stack at the sampling locations.

1. Figure V is a stack diagram of DC-120.
2. Figure VI is a stack diagram of DC-123.
3. Figure VII is a stack diagram of DC-126.
4. Figure VIII is a stack diagram of DC-129.
5. Figure IX is a stack diagram of DC-230.
6. Figure X is a stack diagram of DC-316
7. Traverse point locations for DC-126 & DC-129 are given in Table I.
8. Traverse point locations for DC-120, DC-123 & DC-230 are given in Table II.
9. Traverse point locations for DC-316 are given in Table III.

PROCESS DESCRIPTION AND POLLUTION CONTROL EQUIPMENT

The lime handling system sizes and distribute product sized material to appropriate silos for storage. The two main processes accomplished in the lime handling systems are size reduction and conveying. Size reduction is accomplished with double roll crushers and multi-deck vibrating screens. Materials are routed to appropriate destinations with steel chutes, ducts and diverter gates. All equipment is covered and tied into chutes and ducts, making the lime handling system virtually dust free. All major transfer points in the lime handling system are tied into appropriate dust collectors. Figure 3.1.1 is a process flow diagram of the #1 Lime Handling System.

SAFETY CONSIDERATIONS AND OTHER REQUIREMENTS

OSHA approved scaffolding or other means of reaching the test stacks will be provided for test crew members by Diversified Contractors, Inc.

OTHER COMMENTS, RECOMMENDATIONS, OR PROPOSED MODIFICATIONS

1. Nozzle diameter will be selected after pretest data is collected.

2. EPA Method 3, will be used to determine the dry molecular weight of the gas stream. The gas analysis will be conducted at the job site using an Orsat.

D.C.120

1° Chamber.

Figure V

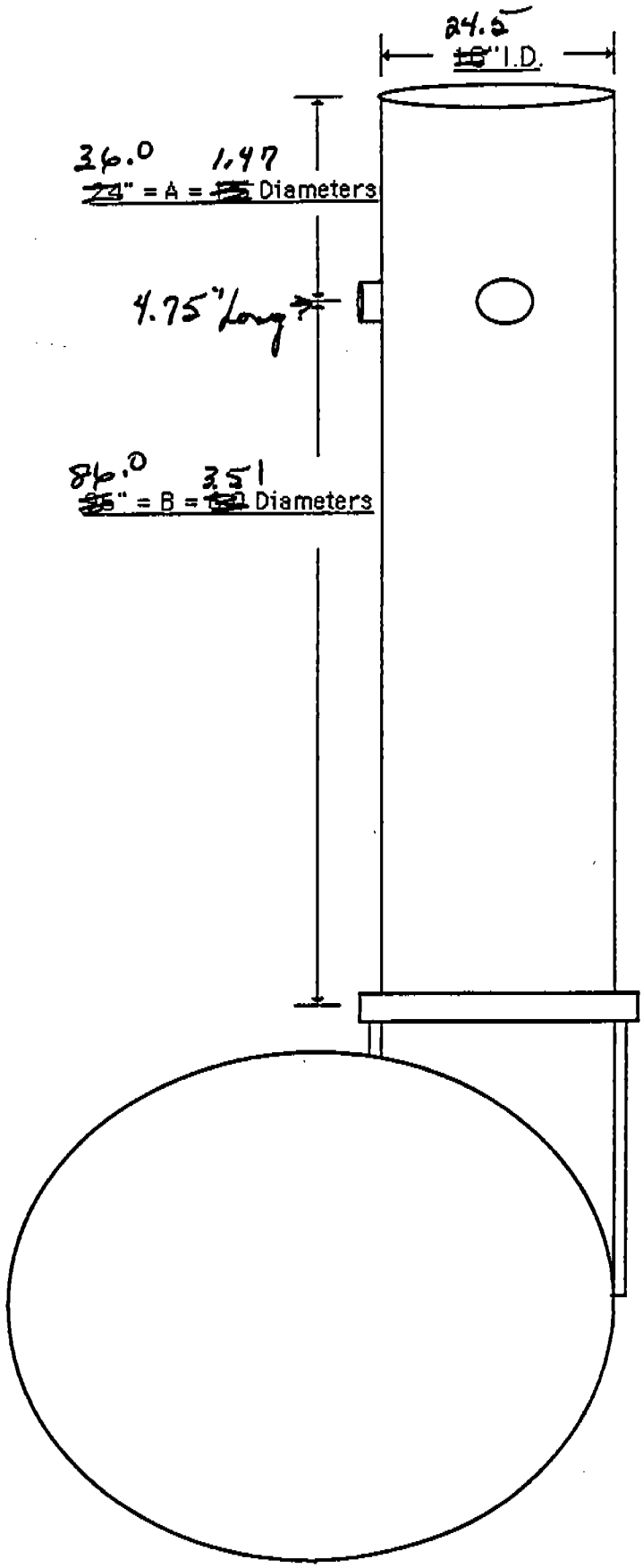

Figure VI

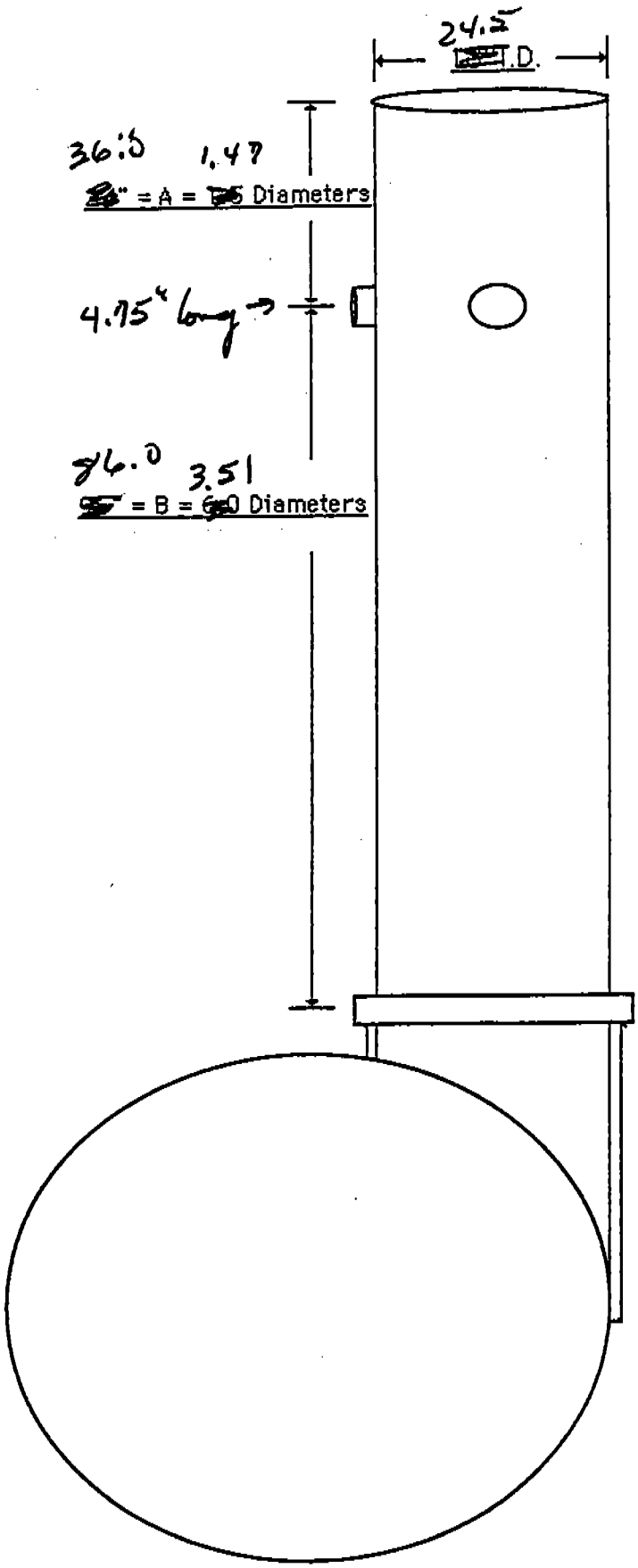

:- ~~[illegible]~~
126

Figure VIII

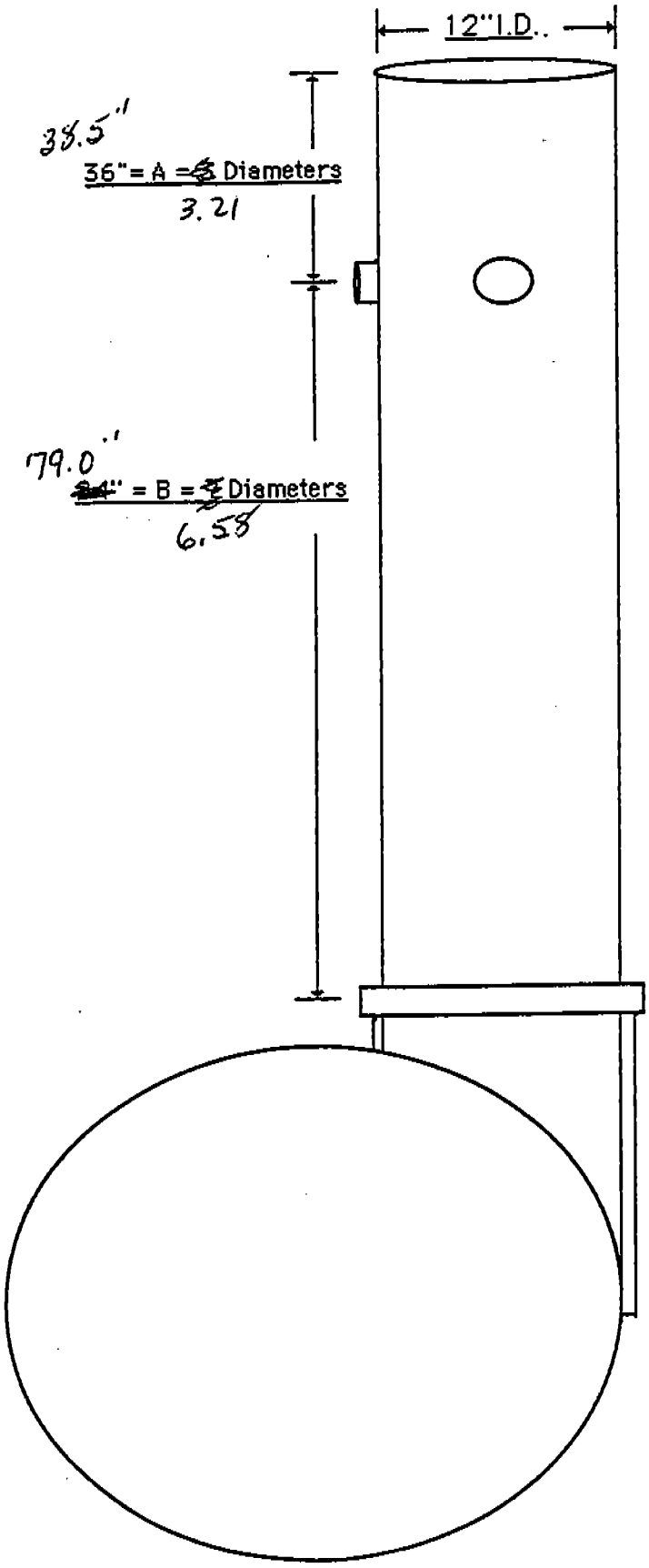

Figure IX

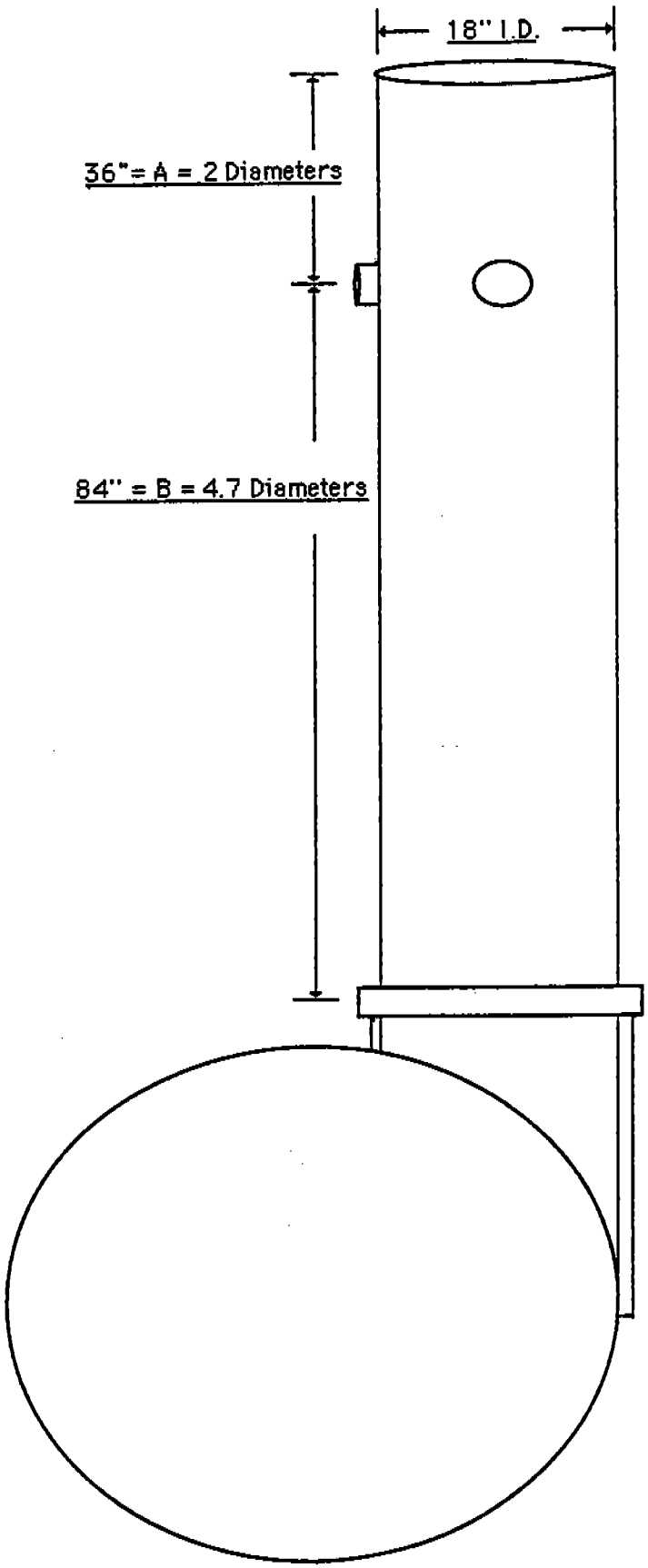

Figure X

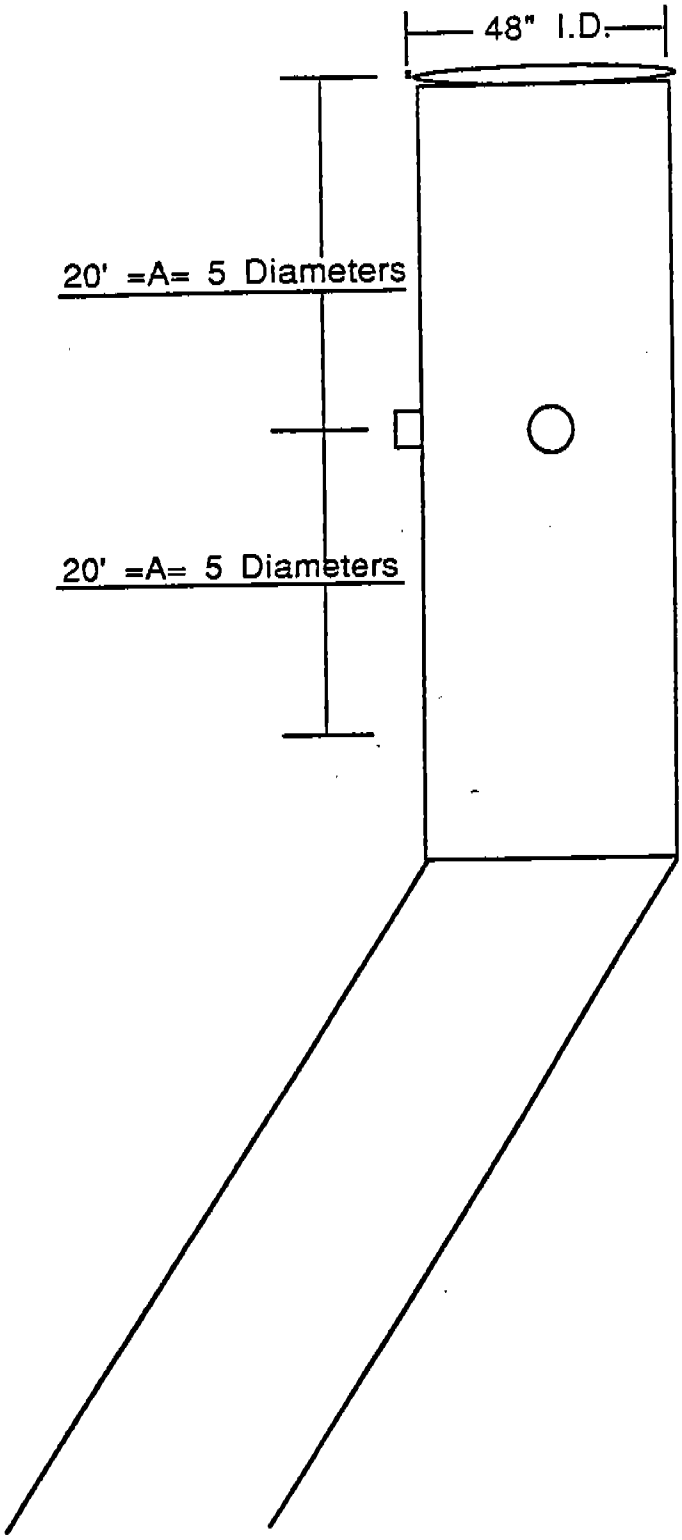

AMERICAN ENVIRONMENTAL TESTING, INCORPORATED
565 So. Birch Drive 801-266-7111
Spanish Fork, Utah 84660

TABLE I
TRAVERSE POINT CALCULATIONS

Plant: Chemstar Lime Co.
Date: 1/7/93
Sampling Location: D.C.-126, D.C.-129
Inside of far wall to outside of
port (distance, X) 16.0"
Inside of near wall to outside of
port (distance, Y) 4.0"
Stack I.D. 12.0" = .7854 ft squared

Traverse Point Number	Percent of Stack I.D.	Stack I.D. inches	Product of col. 2 &3 (to 1/8 in)	Distance Y	Traverse Point Location from outside of ports (sum of columns 4 & 5)
1 & 9	3.2	12	0.384	4	4.384 = 4 3/8"
2 & 10	10.5	12	1.260	4	5.26 = 5 1/4"
3 & 11	19.4	12	2.328	4	6.328 = 6 3/8"
4 & 12	32.3	12	3.876	4	7.876 = 7 7/8"
5 & 13	67.7	12	8.124	4	12.124 = 12 1/8"
6 & 14	80.6	12	9.672	4	13.672 = 13 5/8"
7 & 15	89.5	12	10.740	4	14.74 = 14 3/4"
8 & 16	96.8	12	11.616	4	15.616 = 15 5/8"

AMERICAN ENVIRONMENTAL TESTING, INCORPORATED
565 So. Birch Drive 801-266-7111
Spanish Fork, Utah 84660

TABLE II
TRAVERSE POINT CALCULATIONS

Plant: Chemstar Lime Co.
Date: 1/7/93
Sampling Location: D.C.-120, D.C.-123, D.C.-230
Inside of far wall to outside of
port (distance, X) 22.0"
Inside of near wall to outside of
port (distance, Y) 4.0"
Stack I.D. 18.0" = 1.7671 ft squared

Traverse Point Number	Percent of Stack I.D.	Stack I.D. inches	Product of col. 2 &3 (to 1/8 in)	Distance Y	Traverse Point Location from outside of ports (sum of columns 4 & 5)
1 & 9	3.2	18	0.576	4	4.576 =4 1/2"
2 & 10	10.5	18	1.890	4	5.89 = 5 7/8"
3 & 11	19.4	18	3.492	4	7.892 = 7 1/2"
4 & 12	32.3	18	5.814	4	9.814 = 9 7/8"
5 & 13	67.7	18	12.186	4	16.186 = 16 1/8"
6 & 14	80.6	18	14.508	4	18.508 = 18 1/2"
7 & 15	89.5	18	16.110	4	20.11 = 21 3/8"
8 & 16	96.8	18	17.424	4	21.424 = 21 3/8"

AMERICAN ENVIRONMENTAL TESTING, INCORPORATED
565 So. Birch Drive 801-266-7111
Spanish Fork, Utah 84660

TABLE III
TRAVERSE POINT CALCULATIONS

Plant: Chemstar Lime Co.
Date: 1/7/93
Sampling Location: D.C.-316
Inside of far wall to outside of
port (distance, X) 52.0"
Inside of near wall to outside of
port (distance, Y) 4.0"
Stack I.D. 48.0" = 12.566 ft squared

Traverse Point Number	Percent of Stack I.D.	Stack I.D. inches	Product of col. 2 &3 (to 1/8 in)	Distance Y	Traverse Point Location from outside of ports (sum of columns 4 & 5)
1 & 9	3.2	48	1.536	4	5.536 = 5 1/2"
2 & 10	10.5	48	5.040	4	9.04 = 9"
3 & 11	19.4	48	9.312	4	13.312 = 13 1/8"
4 & 12	32.3	48	15.504	4	19.504 = 19 1/2"
5 & 13	67.7	48	32.496	4	36.496 = 36 1/2"
6 & 14	80.6	48	38.688	4	42.688 = 42 3/4"
7 & 15	89.5	48	42.960	4	46.96 = 47"
8 & 16	96.8	48	46.464	4	50.464 = 50 1/2"

*. NSPS so go to 60 DSC

3. The moisture content and particulate concentration of the gas stream measured by using EPA Method 2-5. The impingers will be weighed at the job site. 30 DSCFH will be collected at a rate greater than 0.531 dscfm.

4. An "S" Type Pitot Tube will be used to measure the velocity of the gas stream using EPA Method 2 (if the stack is 12" inches or greater). An inclined manometer will be used to measure the velocity head. The first mark on the manometer is 0.01 inches of water column from the zero mark.

    a. Current pitot tube and meter calibrations are attached.

5. Barometric pressure will be measured at the stack sampling position via an aneroid barometer.

6. The cross over piece located between the filter and probe will be modified to receive a thermocouple to determine the temperature of the gases leaving the probe.

7. NO_x emissions will be determined via EPA Method 7E using a chemiluminescence analyzer. (Thermo Electron 10AR).

8. CO emissions will be determined via EPA Method 10 using a NDIR analyzer. (MSA Lira 3000).

9. SO_2 emissions will be determined via EPA Method 6C using a pulsed flouresence analyzer (Thermo Electron 40A).

10. A datalogger will be used to record the test data during the test period.

Appendix "C"
(Production Data)

American Environmental Testing Company Inc.

801-266-7111

STACK TESTING -- AREA 100 TOTALIZER TONNAGE

OPERATOR:	Voice Turner	DATE:	2-12-93
TIME	BC-108	BC-111	TOTAL
10:04	73	170	243
10:21	98	236	335
10:36	122	286	408
10:52	144	327	471
11:04	161	372	533
11:19	182	432	614
11:32	200	476	676
Down	Spalls Pile to high		
12:05	200	476	676
12:20	222	532	754
12:35	243	585	828
12:50	260	631	891
1:05	288	688	976
1:20	320	742	1063
1:35	346	794	1140
1:50	375	862	1237
2:05	403	927	1330
2:20	431	992	1423
2:35	451	1043	1494
2:50	478	1102	1580
3:05	511	1167	1678
Down	For PLC Com Failure		
3:35	511	1167	1678
3:50	540	1234	1774
4:05	572	1308	1880
4:20	604	1370	1974
4:35	638	1431	2069

STACK TESTING -- AREA 100 TOTALIZER TONNAGE

OPERATOR:	[illegible]	DATE:	2-12-93
TIME	BC-108	BC-111	TOTAL
4:35	638	1431	2069
4:50	666	1473	2139
5:05	700	1522	2222
5:20	735	1569	2304
5:35	760	1609	2369
5:50	784	1669	2473
6:05	824	1722	2546
6:20	851	1769	2620
6:35	882	1818	2700
6:50	912	1863	2775
7:00	924	1876	2800
		average =	2800 Tons / 9 hrs
			= 311 TPH

STACK TESTING -- AREA 100 TOTALIZER TONNAGE

OPERATOR:	Verne Turner	DATE:	(2-13-93)
TIME	BC-108	BC-111	TOTAL
9:30	18	42	60
9:45	55	120	175
10:00	86	191	277
10:15	105	232	337
10:30	139	283	422
10:45	180	370	550
11:00	210	425	635
11:15	247	503	750
11:30	281	579	860
11:45	316	650	966
12:00	350	730	1080
12:15	389	811	1200
12:30	434	886	1320
Tripped	Reset Back	to 0 at 12:30	
12:30	00	00	00
12:45	45	90	135
1:00	92	186	278
1:15	136	275	412
1:30	163	330	493
1:45	189	386	575
2:00	220	461	681
	stop to check screens		
2:15	220	461	681
2:30	250	514	764
2:45	280	570	850
3:00	312	618	930
3:15	340	675	1015

STACK TESTING -- AREA 100 TOTALIZER TONNAGE

OPERATOR:	Vance Turner	DATE:	
			2-13-93
TIME	BC-108	BC-111	TOTAL
3:15	340	675	1015
3:30	379	736	1115
3:45	405	795	1200
4:00	432	846	1278
4:15	460	896	1356
4:30	487	943	1430
4:45	506	1000	1506
5:00	542	1058	1600
5:15	578	1130	1708
5:30	614	1208	1822
5:45	650	1286	1936
6:00	686	1364	2050
			2050 Tons / 8.5 hrs
			= 241.2 TPH

CHEMSTAR LIME
OPERATIONS LOG
TENMILE PLANT

TIME	CYCLE	DATE: 2-14 SHIFT: Day's NAME: Dean Bailey
10:00 Am		Production rate 560 TON / DAY
10:15 Am		Production rate 560 TON / DAY
10:30 Am		Production rate 560 TON / DAY
10:45 Am		Production rate 560 TON / DAY
11:00 Am		Production rate 560 TON / DAY
11:15 Am		Production rate 600 TON / DAY
11:30 Am		Production rate 600 TON / DAY
11:45 Am		Production rate 600 TON / DAY
12:00 Am		Production rate 600 TON / DAY
12:15 Am		Production rate 600 TON / DAY
12:30 Am		Production rate 600 TON / DAY
12:45 Am		Production rate 600 TON / DAY
1:00 Am		Production rate 600 TON / DAY
1:15 Am		Production rate 600 TON / DAY
1:30 Am		Production rate 600 TON / DAY
1:45 Am		Production Rate 600 TON / DAY
2:00 Am		Production Rate 600 TON / DAY
2:15 Am		Production rate 600 TON / DAY
2:30 Am		Production rate 600 TON / DAY
2:45 Am		Production rate 600 TON / DAY
3:00 Am		Production rate 600 TON / DAY
3:15 Am		PRODUCTION RATE 600 TONS / DAY
3:30 Am		PRODUCTION RATE 600 TPD
3:45 PM		PRODUCTION RATE 600 TPD
4:00 PM		PRODUCTION RATE 600 TPD
4:15 PM		PRODUCTION RATE 600 TPD
4:30 PM		PRODUCTION RATE 600 TPD
4:45 PM		PRODUCTION RATE 600 TPD
5:00 PM		PRODUCTION RATE 600 TPD
5:15 PM		PRODUCTION RATE 600 TPD
5:30 PM		PRODUCTION RATE 600 TPD
5:45 PM		PRODUCTION RATE 600 TPD

Ron Rowland

19000 / 32 = 593.97

CHEMSTAR LIME
OPERATIONS LOG
TENMILE PLANT

TIME	CYCLE	DATE: 2-15 SHIFT: Day's	NAME: Dean Bailey	
11:15	3652	Production rate TPD 604	raw stone to Kiln	18,000
11:30	3653	604		18,000
11:45	3655	604		36,000
12:00	3656	604		18,000
12:15	3657	604		18,000
12:30	3658	604		18,000 lbs
12:45	3660	604		36,000 lbs
1:00	3661	604		18,000 lbs
1:15	3662	604		18,000 lbs
1:30	3663	604		18,000 lbs
1:45	3665	604		36,000 lbs
2:00	3666	604		18,000 lbs
2:15	3667	604		18,000 lbs
2:30	3668	604		18,000 lbs
2:45	3670	604		36,000 lbs
3:00	3671	604		18,000 lbs
3:15	3672	604		18,000 lbs
3:30	3673	604		18,000 lbs
3:45	3675	604		36,000 lbs
4:00	3676	604		18,000 lbs
4:15	3677	604		18,000 lb.
4:30	3678	604	SWINGS	18,000 lb.
4:45	3680	604		36,000 lb.
5:00	3681	604		18,000 lb.
5:15	3682	604		18,000 lb.
5:30	3683	604		18,000 lb.
5:45	3685	604		36,000 lb.
6:00	3686	604		18,000 lb.
6:15	3687	604		18,000 lb.
6:30	3688	604		18,000 lb.
6:45	3690	604		36,000 lb.
7:00	3691	604		18,000

CHEMSTAR LIME
OPERATIONS LOG
TENMILE PLANT

TIME	CYCLE	DATE: 2/15 SHIFT: ~~DAYS~~ SWINGS NAME: RON ROWLAND		
7:15	3692	604	18,000	lb.
7:30	3693	604	18,000	lb.
7:45	3 95	604	36,000	lb.
8:00	3696	604	18,000	lb.
8:15	3697	604	18,000	lb.
8:30	3698	604	18,000	lb.
8:45	3699	604	18,000	lb.
9:00	3701	604	36,000	lb.
9:15	3702	604	18,000	lb.

9 TONS per 12 MIN.

AMERICAN ENVIRONMENTAL TESTING, INCORPORATED
565 So. Birch Drive 801-266-7111
Spanish Fork, Utah 84660

Baghouse Information Sheet

Client: Chemstar Lime
Date: 2/12-93
Location: Bancroft, Idaho
Manufacturer: Mikropul
Source: DC-120
Serial #: 910-414-H1

Test #1

Time	ΔP in H20	Temperature
Start 1000	—	—
1 1015	2.0	28
2 1030	2.1	29
3 1045	2.1	30
4 1100	2.1	30
5 1115	2.1	30
6 1130	2.0	31
7 1145	2.1	30
8 1200	2.1	29
1215	2.1	30
1230	2.1	30
1245	2.1	30

Test #2

Time	ΔP in H20	Temperature
Start 1345	2.1	30
1 1400	2.1	30
2 1415	2.2	30
3 1430	2.1	31
4 1445	2.0	30
5 1500	2.1	30
6 1515	2.1	30
7 1530	2.0	31
8 1545	2.1	31
1600	2.1	31
1615	2.1	31

Test #3

Time	ΔP in H20	Temperature
Start 1700	2.1	30
1 1715	2.1	30
2 1730	2.0	29
3 1745	2.1	29
4 1800	2.0	29
5 1815	2.1	28
6 1830	2.1	28
7 1845	2.1	27
8 1900	2.1	27

Test #4

Time	ΔP in H20	Temperature
1		
2		
3		
4		
5		
6		
7		
8		

AMERICAN ENVIRONMENTAL TESTING, INCORPORATED
565 So. Birch Drive 801-266-7111
Spanish Fork, Utah 84660

Baghouse Information Sheet

Client: Chemstar Lime
Date: 2/12-93
Location: Bancroft, Idaho
Manufacturer: Nikropul
Source: DC-123
Serial #: 910-414-H5

Test #1

Time	ΔP in H20	Temperature
Start 1000	6.9	28
1 1015	6.8	29
2 1030	6.9	29
3 1045	6.9	30
4 1060	6.8	30
5 1115	6.8	30
6 1130	6.8	31
7 1145	6.8	30
8 1200	6.8	30
1215	6.9	30
1230	6.8	30

Test #2

Time	ΔP in H20	Temperature
Start 1300	6.9	30
1 1315	6.9	31
2 30	6.9	31
3 45	6.9	31
4 1400	7.0	31
5 15	6.9	30
6 30	6.9	31
7 45	6.9	32
8 1500	6.8	31

Test #3

Time	ΔP in H20	Temperature
Start 1645	6.8	30
1 1700	6.9	31
2 15	6.8	31
3 30	6.9	30
4 45	6.8	30
5 1800	6.9	29
6 15	6.9	28
7 30	6.9	27
8 45	6.8	27
1900	6.9	26

Test #4

Time	ΔP in H20	Temperature
1		
2		
3		
4		
5		
6		
7		
8		

AMERICAN ENVIRONMENTAL TESTING, INCORPORATED
565 So. Birch Drive 801-266-7111
Spanish Fork, Utah 84660

Baghouse Information Sheet

Client: Chemstar Lime Co. Date: 2/13-93
Location: Bancroft, Idaho Manufacturer: Mikropul
Source: DC-126 Serial #: 910-414-A7

Test #1

Time	ΔP in H20	Temperature
Start	–	–
1 0945	3.5	28
2 1000	3.6	28
3 1015	3.5	29
4 1030	3.6	31
5 1045	3.6	32
6 1100	3.6	34
7 1115	3.6	34
8 1130	3.6	35
1145		36

Test #2

Time	ΔP in H20	Temperature
Start 1215	3.6	36
1 1230	3.6	36
2 1245	3.5	37
3 1300	3.6	37
4 1315	3.6	37
5 1330	3.6	38
6 1345	3.5	38
7 1400	3.6	38
8 1415	3.6	38

Test #3

Time	ΔP in H20	Temperature
Start 1515	3.5	38
1 1530	3.6	37
2 1545	3.6	36
3 1600	3.6	36
4 1615	3.5	36
5 1630	3.6	35
6 1645	3.6	34
7 1700	3.6	34
8 1715	3.6	34

Test #4

Time	ΔP in H20	Temperature
1		
2		
3		
4		
5		
6		
7		
8		

AMERICAN ENVIRONMENTAL TESTING, INCORPORATED
565 So. Birch Drive 801-266-7111
Spanish Fork, Utah 84660

Baghouse Information Sheet

Client: Chemetalume.
Date: 2/13-93
Location: Bancroft, Idaho.
Manufacturer: Mikropul
Source: DC-129
Serial #: 910-414-H8

Test #1

Time	ΔP in H20	Temperature
Start 0945	5.1	33
1 1000	5.1	35
2 1015	5.1	34
3 1030	5.1	36
4 1045	5.0	37
5 1100	5.1	38
6 1115	5.1	38
7 1130	5.1	37
8 1145	4.9	39

Test #2

Time	ΔP in H20	Temperature
Start 1215	5.0	40
1 1230	5.0	40
2 1245	5.1	39
3 1300	5.1	38
4 1315	5.1	38
5 1330	5.0	38
6 1345	5.1	39
7 1400	5.0	38
8 1415	5.1	39

Test #3

Time	ΔP in H20	Temperature
Start 1530	4.9	39
1 1545	5.0	38
2 1600	5.1	37
3 1615	5.2	36
4 1630	5.1	36
5 1645	5.1	35
6 1700	5.1	35
7 1715	5.1	34
8 1730	5.1	34
1745	5.0	34

Test #4

Time	ΔP in H20	Temperature
1		
2		
3		
4		
5		
6		
7		
8		

AMERICAN ENVIRONMENTAL TESTING, INCORPORATED

565 So. Birch Drive 801-266-7111

Spanish Fork, Utah 84660

Baghouse Information Sheet

Client: Chemstar Lime.

Date: 2/15-93

Location: Bancroft, Idaho.

Manufacturer: Mikropul

Source: QC-230

Serial #: 910-414-H11

Test #1

Time	ΔP in H20	Temperature
Start 1100	3.8	17
1 1115	3.8	18
2 1130	3.8	17
3 1145	3.8	18
4 1200	3.8	17
5 1215	3.8	17
6 1230	3.8	17
7 1245	3.8	18
8 1300	3.8	18
1315	3.8	18

Test #2

Time	ΔP in H20	Temperature
Start 1345	3.8	18
1 1400	3.8	19
2 1415	3.8	20
3 1430	3.8	20
4 1445	3.8	20
5 1500	3.8	21
6 1515	3.8	22
7 1530	3.8	23
8 1545	3.8	23

Test #3

Time	ΔP in H20	Temperature
Start = 1615	3.8	22
1 1630	3.8	23
2 1645	3.8	24
3 1700	3.8	22
4 1715	3.8	21
5 1730	3.8	20
6 1745	3.8	20
7 1800	3.8	19
8 1815	3.8	17

Test #4

Time	ΔP in H20	Temperature
1		
2		
3		
4		
5		
6		
7		
8		

AMERICAN ENVIRONMENTAL TESTING, INCORPORATED
565 So. Birch Drive 801-266-7111
Spanish Fork, Utah 84660

Baghouse Information Sheet

Client: Chemstar Lime.
Date: 2/14-93
Location: Bancroft, Idaho
Manufacturer: DEC, Inc. Jt 91-1472
Source: DC-303
Serial #: DLMV9/15K3 (230/460/3/60)

Test #1

Time	ΔP in H20	Temperature
Start 1000	3.2	30
1 1015	3.2	32
2 1030	3.2	34
3 45	3.3	34
4 1100	3.2	34
5 15	3.2	35
6 30	3.2	36
7 45	3.2	36
8 1200	3.2	37
1215	3.2	

Test #2

Time	ΔP in H20	Temperature
Start 1300	3.3	37
1 15	3.2	38
2 30	3.3	38
3 45	3.2	37
4 1400	3.3	38
5 15	3.3	37
6 30	3.3	36
7 45	3.3	36
8 1500	3.1	37
15	3.2	

Test #3

Time	ΔP in H20	Temperature
Start 1530	3.2	36
1 45	3.2	36
2 1600	3.3	35
3 15	3.3	34
4 30	3.3	33
5 45	3.2	33
6 1700	3.2	34
7 1715	3.2	34
8 1730	3.2	34

Test #4

Time	ΔP in H20	Temperature
1		
2		
3		
4		
5		
6		
7		
8		

AMERICAN ENVIRONMENTAL TESTING, INCORPORATED
565 So. Birch Drive 801-266-7111
Spanish Fork, Utah 84660

Baghouse Information Sheet

Client: Chemstar Lime
Date: 2/15-93
Location: Bancroft, Idaho
Manufacturer: Fuller
Source: AC-316
Serial #: Model 448510

Test #1

Time	ΔP in H20	Temperature
A/B/C → Sections		20
1 1115	6.2/5.8/6.2	20
2 30	6.2/5.8/6.0	21
3 45	6.2/5.8/6.1	20
4 1200	6.2/5.8/6.1	19
5 15	6.2/5.8/6.1	18
6 30	0-0-0	19
7 45	6.2/5.8/6.1	20
8 1300	6.2/5.8/6.1	20

Test #2

Time	ΔP in H20	Temperature
A/B/C - sections		21
1 1400	6.2/5.8/6.1	22
2 15	6.2/5.8/6.1	22
3 30	6.2/5.8/6.1	23
4 45	6.2/0/0	23
5 1500	6.2/5.8/6.1	20
6 15	6.2/5.8/6.1	20
7 30	6.2/5.8/6.1	21
8 45	6.2/5.8/6.1	20

Test #3

Time	ΔP in H20	Temperature
A/B/C - Sections		22
1 1615	6.2/5.8/0	20
2 30	6.2/5.8/6.1	19
3 45	6.2/5.8/6.1	19
4 1700	6.2/5.8/6.1	19
5 15	6.2/5.8/6.1	18
6 30	6.2/5.8/6.1	18
7 45	6.2/5.8/6.1	17
8 1800	0 0 / 6.1	17

Test #4

Time	ΔP in H20	Temperature
1		
2		
3		
4		
5		
6		
7		
8		

Appendix "D"

(Field and Laboratory Data)

American Environmental Testing Company Inc.

801-266-7111

AMERICAN ENVIRONMENTAL TESTING, INCORPORATED
565 So. Birch Drive 801-266-7111
Spanish Fork, Utah 84660

PARTICULATE FIELD DATA FORMAT

1	Plant	Chemstar Lime
2	City	Bancroft, Idaho
3	Location	DC-120 Belt
4	Operator	Greg Johnson
5	Date	2/12/93
6	EPA Method and Run #	EPA - 5 #1
7	Stack Diameter (in)	24.5
8	Sample Box Number	RAC #1A
9	Meter Box Number	RAC 1
10	Meter ^H@	1.815
11	Meter Calibration, Y	1.002
12	Pitot Tube, Cp	0.8396
13	Probe Length (ft)	4' - C
14	Probe Liner Material	Teflon
15	Probe Heater Setting (°F)	Ambient
16	Ambient Temperature (°F)	30
17	Barometeric Press., Pb (in Hg)	23.4
18	Assumed Moisture (%)	2
19	Static Pressure, Ps (in H2O)	-0.17
20	C Factor	0
21	Reference ^P (in H2O)	0.87
22	Nozzle Identification Number	3/16 - 2
23	Nozzle Diameter (in)	0.191
24	Thermometer Number	1-A
25	Pretest Leak Rate (CFM)	0.00
26	Leak Check Vacuum (in H2O)	22.6
27	Filter Number	RC - 1
28	Gas Analysis	
29	CO (%)	0
30	CO2 (%)	0.2
31	O2 (%)	20.9
32	N2 (%)	78.9
33	Stack Square Feet	3.274

Sample Point	Meter Temperature Outlet (°F)	Meter Temperature Inlet (°F)	Stack Temp Ts (°F)	Gas Volume Vm (ft3)	Gas Volume difference (ft3)
starting				374.947	
1	52	52	35	377.72	2.77
2	64	53	37	380.59	2.87
3	74	56	37	383.63	3.04
4	84	59	37	386.83	3.20
5	91	63	38	390.11	3.28
6	96	66	38	393.78	3.67
7	102	70	37	397.77	3.99
8	109	75	37	401.94	4.17
9	113	79	38	406.04	4.10
10	117	82	37	410.12	4.08
11	120	86	38	414.13	4.01
12	120	88	35	418.226	4.10
13	81	81	39	421.05	2.82
14	87	90	39	424.11	3.06
15	96	81	40	427.37	3.26
16	102	82	39	430.81	3.44
17	107	84	39	434.44	3.63
18	112	86	38	438.26	3.82
19	116	88	39	442.26	4.00
20	119	90	39	446.3	4.04
21	122	92	39	450.6	4.30
22	123	94	39	454.81	4.21
23	124	96	38	459.17	4.36
24	125	97	39	463.405	4.24

avg °F		90.54	37.96		
avg °R		550.54	497.96		
total =				88.4580	88.46
average =	102.33	78.75	37.96		
Sample Point	Meter Temperature Inlet (°F)	Meter Temperature Outlet (°F)	Stack Temp (°F) T	Gas Volume Vm	Gas Volume Vm

Velocity Head ^Ps (in H20)	Pressure Diff ^H (in H20)	Sqrt ^Ps	Sampling Time (min)	Clock Time (24 hrs)	Vacuum (in Hg)
				1005	
0.52	0.75	0.7211	5	1010	2
0.57	0.83	0.7550	5	1015	2
0.66	0.98	0.8124	5	1020	2.1
0.71	1.06	0.8426	5	1025	2.2
0.75	1.13	0.8660	5	1030	2.3
0.9	1.37	0.9487	5	1035	2.5
1.05	1.61	1.0247	5	1040	2.6
1.1	1.71	1.0488	5	1045	2.7
1.05	1.64	1.0247	5	1050	2.4
1.05	1.65	1.0247	5	1055	2.5
1	1.58	1.0000	5	1110	2.3
1.05	1.67	1.0247	5	1115	2.4
0.49	0.74	0.7000	5	1120	2
0.6	0.92	0.7746	5	1125	2.1
0.69	1.06	0.8307	5	1130	2.3
0.75	1.16	0.8660	5	1135	2.5
0.82	1.28	0.9055	5	1140	2.6
0.91	1.43	0.9539	5	1222	2.7
1	1.58	1.0000	5	1227	2.8
0.99	1.57	0.9950	5	1232	2.8
1.1	1.75	1.0488	5	1237	3
1.05	1.67	1.0247	5	1242	2.7
1.1	1.76	1.0488	5	1247	2.9
1.02	1.63	1.0100	5	1252	2.8

			120	120	
0.8721	1.3565	0.9271	5	1119.13	2.47
Velocity Head ^Ps	Pressure Diff ^H	Sqrt ^Ps	Sampling Time	Clock Time	Vacuum

Probe Temperature Exit (°F)	Filter Temperature (°F)	Impinger Temperature Outlet (°F)	Vs	Point to Point Isokinetics
40	40	37	44.3562	102.17
45	40	35	46.5335	99.96
41	39	34	50.0726	97.23
40	38	36	51.9346	97.50
39	40	36	53.4312	96.36
40	41	37	58.5310	97.77
41	40	38	63.1571	97.49
40	38	35	64.6434	98.50
41	37	36	63.2207	98.49
39	39	38	63.1571	97.31
42	41	39	61.6970	97.47
45	40	37	63.0299	96.73
40	38	33	43.2313	101.87
40	39	35	47.8383	98.45
38	37	37	51.3522	97.94
39	42	35	53.4848	98.44
39	40	36	55.9251	98.75
40	38	37	58.8552	97.98
42	37	35	61.7590	97.50
40	39	36	61.4494	98.53
42	40	38	64.7733	99.11
41	42	39	63.2841	99.03
40	42	40	64.7084	99.87
42	40	41	62.3735	100.62

40.67	39.46	36.67
Probe Exit Temperature (°F)	Filter Temperature (°F)	Outlet Impinger Temperature (°F)

POST TEST CALCULATION

VOLUME DRY GAS
Vm(std) = 65.6375

VOLUME H2O VAPOR
Vw(std) = 0.2918

MOISTURE CONTENT
Bws = 0.0044

Vm 88.4580
Vm(std) = 65.6375

Vic(mls) 6.2
Vw(std) = 0.2918

MOL WT DRY STACK GASES
Mds = 28.8680

STACK VELOCITY
Vs = 57.1996

DRY STACK FLOW RATE
Q(std) = 5.5628E+05

Kp 85.49
Vs = 57.1996

MOL WT WET STACK GASES
Mws = 28.8199

ISOKINETIC CALCULATION
An = 1.9897E-04
% ISO = 98.7331

PARTICULATE CONCENTRATION
Cs = 1.0360E-04

Mn 6.8
Cs = 1.0360E-04
lbs/dscf = 2.2839E-07
grains/dscf = 0.0016
lbs/hr = 0.1271

Initial Leak Check Rate
Finish 374.905
Start 374.903
Rate = 0.0020

Pitot Tubes
A = OK
B = OK

Vac. = 22.6

Final Leak Check Rate
Finish 463.605
Start 463.602
Rate = 0.0030

Pitot Tubes
A = OK
B = OK

Vac. = 23.5

American Environmental Testing Company, Inc.
565 South Birch Drive
Spanish Fork, Utah 84660
(801) 266-7111

LABORATORY DATA
EPA Method 5

Company: Chemstar - Tim Run Number: Test #1 RAC

Sampling Location: DC - 120 Date: 2-12-93

Moisture Collected

	Initial Weight	Final Weight	Weight Gain
Impinger 1	567.5	562.2	-5.3
Impinger 2	582.3	583.0	0.7
Impinger 3	531.6	532.4	0.8
Impinger 4	636.8	646.8	+10.0

Total Gain = 6.2g total

Particulate Collected

Front - Half Analysis (Nozzle, Probe, Filter and Oven Glassware)

1. Filter Final Weight 0.6347
2. Filter Tare Weight 0.6298 RC-1
3. Total Filter Weight 0.0049 = 4.9mg
4. Particulate caught in nozzle, probe and glassware 0.0019 = 1.9mg
5. Total Front - Half Catch 0.0068 6.8mg = 6.8mg Total

For Test Results

Back - Half Analysis (Impingers, and Connecting Glassware)

1. Particulate caught in impingers evaporated down at less than 120° F. 0.9

Total Particulate Catch (Sum of Front and Back - Half Catches)

7.7mg

AMERICAN ENVIRONMENTAL TESTING, INCORPORATED
565 So. Birch Drive 801-266-7111
Spanish Fork, Utah 84660

PARTICULATE FIELD DATA FORMAT

1	Plant	Chemstar Lime
2	City	Banncroft, Idaho
3	Location	DC-120 Belt
4	Operator	Greg Johnson
5	Date	2/12/93
6	EPA Method and Run	EPA - 5 #2
7	Stack Diameter (in)	24.5
8	Sample Box Number	RAC #1 A
9	Meter Box Number	RAC 1
10	Meter ^H@	1.815
11	Meter Calibration, Y	1.002
12	Pitot Tube, Cp	0.8396
13	Probe Length (ft)	4' - C
14	Probe Liner Material	Teflon
15	Probe Heater Setting (°F)	Ambient
16	Ambient Temperature (°F)	35
17	Barometeric Press., Pb (in Hg)	23.41
18	Assumed Moisture (%)	2
19	Static Pressure, Ps (in H2O)	-0.17
20	C Factor	0
21	Reference ^P (in H2O)	0.87
22	Nozzle Identification Number	3/16 - 2
23	Nozzle Diameter (in)	0.191
24	Thermometer Number	1-A
25	Pretest Leak Rate (CFM)	0.00
26	Leak Check Vacuum (in H2O)	21.5
27	Filter Number	RL - 2
28	Gas Analysis	
29	CO (%)	0
30	CO2 (%)	0.2
31	O2 (%)	20.9
32	N2 (%)	78.9
33	Stack Square Feet	3.274

PRETEST CALCULATIONS

NOZZLE DIAMETER

Dn = 0.191

constant	0.0357
Qm	0.75
Pb(in HG)	23.41
Pgm(in H20)	-0.17
Pm	23.3975
Cp	0.8396
Tm(°F)	100
Tm(°R)	560
Bwm	0
Bws	0.02
Ts(°F)	32
Ts(°R)	492
Mds	28.868
Ms	28.6506
Pb(in HG)	23.41
Pgs(in H20)	-0.17
Ps	23.3975
(^P)avg	0.87

Dn = 0.1873

PRETEST DATA

Cp	0.8396
Imp V(H20)(ml)	67.5000
Gel H20(g)	12.0000
V(H20)(ml)	127.8000
Vm(acf)	49.2300
^h avg	0.2000
Vwc	6.0155
Vmc	36.3984

Bws = 0.1418

ISOKINETIC ^H

^H = 0.7640

constant	849.8000
^H@	1.0000
Mds	28.8680
Mm	28.8680
K	0.8781
^P	0.8700

^H = 0.7640

Gas Volume Difference (ft3)	Sampling Time (min)	Clock Time (24 hrs)	Vacuum (in Hg)
2.76		1345	
2.88	5	1350	2
3.13	5	1355	2
3.17	5	1400	2.1
3.35	5	1405	2.2
3.78	5	1410	2.4
4.12	5	1415	2.4
4.12	5	1420	2.6
4.29	5	1425	2.7
4.31	5	1430	2.8
4.17	5	1435	3
4.11	5	1440	2.6
2.87	5	1455	2.5
3.03	5	1500	2
3.44	5	1505	2.1
3.51	5	1510	2.4
3.74	5	1535	2.3
3.80	5	1540	2.5
4.25	5	1545	2.6
4.16	5	1550	2.7
4.35	5	1555	2.6
4.21	5	1600	2.8
4.39	5	1605	2.7
4.31	5	1610	2.8
	5	1615	2.8

Gas Volume Vm			
90.25			
	20	120	
	5	1483.75	2.48
	pling	Clock	Vacuum
	ne	Time	

Probe Temperature Exit (°F)	Filter Temperature (°F)	Impinger Temperature Outlet (°F)	Vs	**Point to Point Isokinetics**
40	38	35	43.5857	102.37
41	40	35	48.1419	95.94
41	41	36	51.2531	97.32
40	41	38	51.2531	97.65
38	37	39	52.7177	99.52
38	37	40	59.2413	99.40
37	38	40	63.2251	100.46
39	40	38	63.2886	99.57
37	38	38	64.6480	100.22
36	38	37	64.7130	100.17
37	40	38	63.0981	98.72
38	40	39	61.5153	99.05
39	41	41	44.4041	101.09
40	42	41	47.7457	98.13
41	42	42	52.6648	99.62
40	42	42	51.9905	102.43
37	41	40	55.2428	102.42
38	39	40	58.3258	98.28
38	40	40	63.4153	101.02
39	40	39	60.8908	102.38
39	37	37	64.8428	99.98
39	38	37	63.2886	98.75
42	42	36	64.1220	101.01
41	39	39	63.5255	100.02

38.96	39.63	38.63
Probe Exit Temperature (°F)	Filter Temperature (°F)	Outlet Impinger Temperature (°F)

POST TEST CALCULATION

VOLUME DRY GAS
Vm(std) = 66.9964

VOLUME H2O VAPOR
Vw(std) = 0.4001

MOISTURE CONTENT
Bws = 0.0059

Vm 90.2470
Vm(std) = 66.9964

Vic(mls) 8.5
Vw(std) = 0.4001

MOL WT DRY STACK GASES
Mds = 28.8680

STACK VELOCITY
Vs = 57.3774

DRY STACK FLOW RATE
Q(std) = 5.5731E+05

Kp 85.49
Vs = 57.3774

MOL WT WET STACK GASES
Mws = 28.8035

ISOKINETIC CALCULATION
An = 1.9897E-04
% ISO = 100.0993

PARTICULATE CONCENTRATION
Cs = 1.1642E-04

Mn 7.8
Cs = 1.1642E-04
lbs/dscf = 2.5667E-07
grains/dscf = 0.0018
lbs/hr = 0.1430

Initial Leak Check Rate
Finish 464.323
Start 464.321
Rate = 0.0020

Pitot Tubes
A = OK
B = OK

Vac. = 21.5

Final Leak Check Rate
Finish 554.815
Start 554.811
Rate = 0.0040

Pitot Tubes
A = OK
B = OK

Vac. = 22.5

American Environmental Testing Company, Inc.
565 South Birch Drive
Spanish Fork, Utah 84660
(801) 266-7111

LABORATORY DATA
EPA Method 5

Company: Chemstar Lime Co. Run Number: Test #2.

Sampling Location: DC-120 Date: 2/12-93

Moisture Collected

	Initial Weight	Final Weight	Weight Gain
Impinger 1	551.8	547.0	-4.8
Impinger 2	580.4	581.7	+ 1.3
Impinger 3	530.6	531.5	0.9
Impinger 4	640.0	651.1	11.1

Total Gain = 8.5

Particulate Collected

Front - Half Analysis (Nozzle, Probe, Filter and Oven Glassware)

1. Filter Final Weight 0.6344
2. Filter Tare Weight 0.6291 RL #2
3. Total Filter Weight 0.0053 = 5.3 mg.
4. Particulate caught in nozzle, probe and glassware 0.0025 = 2.5 mg.
5. Total Front - Half Catch 0.0078 = 7.8 mg. Total.

Back - Half Analysis (Impingers, and Connecting Glassware)

1. Particulate caught in impingers evaporated down at less than 120° F. 1.3 mg.

Total Particulate Catch (Sum of Front and Back - Half Catches)

9.1 mg

AMERICAN ENVIRONMENTAL TESTING, INCORPORATED
565 So. Birch Drive 801-266-7111
Spanish Fork, Utah 84660

PARTICULATE FIELD DATA FORMAT

1	Plant	Chemstar Lime
2	City	Banncroft, Idaho
3	Location	DC-120 Belt
4	Operator	Greg Johnson
5	Date	2/12/93
		EPA - 5 *3
6	Stack Diameter (in)	24.5
7	Sample Box Number	RAC *1 A
8	Meter Box Number	RAC 1
9	Meter ^H@	1.815
10	Meter Calibration, Y	1.002
11	Pitot Tube, Cp	0.8396
12	Probe Length (ft)	4' - C
13	Probe Liner Material	Teflon
14	Probe Heater Setting (°F)	Ambient
15	Ambient Temperature (°F)	30
16	Barometeric Press., Pb (in Hg)	23.45
17	Assumed Moisture (%)	2
18	Static Pressure, Ps (in H2O)	-0.17
19	C Factor	0
20	Reference ^P (in H2O)	0.87
21	Nozzle Identification Number	3/16 - 2
22	Nozzle Diameter (in)	0.191
23	Thermometer Number	1-A
24	Pretest Leak Rate (CFM)	0.00
25	Leak Check Vacuum (in H2O)	20.4
26	Filter Number	RL - 3
27	Gas Analysis	
28	CO (%)	0
29	CO2 (%)	0.5
30	O2 (%)	20.8
31	N2 (%)	78.7
32	Stack Square Feet	3.274

PRETEST CALCULATIONS

NOZZLE DIAMETER

Dn = 0.191

constant	0.0357
Qm	0.75
Pb(in HG)	23.45
Pgm(in H20)	-0.17
Pm	23.4375
Cp	0.8396
Tm(°F)	100
Tm(°R)	560
Bwm	0
Bws	0.02
Ts(°F)	32
Ts(°R)	492
Mds	28.912
Ms	28.6938
Pb(in HG)	23.45
Pgs(in H20)	-0.17
Ps	23.4375
(^P)avg	0.87

Dn = 0.1874

PRETEST DATA

Cp	0.8396
Imp V(H20)(ml)	67.5000
Gel H20(g)	12.0000
V(H20)(ml)	127.8000
Vm(acf)	49.2300
^h avg	0.2000
Vwc	6.0155
Vmc	36.4606

Bws = 0.1416

ISOKINETIC ^H

^H = 0.7640

constant	849.8000
^H@	1.0000
Mds	28.9120
Mm	28.9120
K	0.8781
^P	0.8700

^H = 0.7640

Sample Point	Meter Temperature Outlet (°F)	Meter Temperature Inlet (°F)	Stack Temp Ts (°F)	Gas Volume Vm (ft3)	Gas Volume difference (ft3)
starting				555.247	
1	58	58	36	558.05	2.80
2	62	60	36	561.02	2.97
3	69	60	35	564.19	3.17
4	74	62	36	567.39	3.20
5	86	62	38	570.66	3.27
6	91	64	37	574.25	3.59
7	99	66	36	578.26	4.01
8	102	69	35	582.45	4.19
9	109	72	34	586.53	4.08
10	114	74	36	590.44	3.91
11	118	77	35	594.39	3.95
12	120	79	37	598.64	4.25
13	65	69	36	601.45	2.81
14	73	71	37	604.39	2.94
15	79	75	36	607.61	3.22
16	84	79	35	610.94	3.33
17	91	82	36	614.39	3.45
18	99	86	35	618.09	3.70
19	104	89	37	622.36	4.27
20	110	90	38	626.34	3.98
21	115	93	37	630.47	4.13
22	118	95	38	634.84	4.37
23	120	98	36	639.28	4.44
24	124	99	37	643.445	4.16

avg °F		85.28	36.21		
avg °R		545.28	496.21		
total =				88.1980	88.20
average =	94.35	76.21	36.21		
Sample Point	Meter Temperature Inlet (°F)	Meter Temperature Outlet (°F)	Stack Temp (°F) T	Gas Volume Vm	Gas Volume Vm

Velocity Head ^Ps (in H20)	Pressure Diff ^H (in H20)	Sqrt ^Ps	Sampling Time (min)	Clock Time (24 hrs)	Vacuum (in Hg)
				1700	
0.52	0.76	0.7211	5	1705	2
0.59	0.87	0.7681	5	1710	2.1
0.68	1.01	0.8246	5	1715	2.5
0.7	1.04	0.8367	5	1720	2.6
0.71	1.07	0.8426	5	1725	2.7
0.88	1.33	0.9381	5	1730	3.1
1	1.53	1.0000	5	1735	3.3
1.1	1.70	1.0488	5	1740	3.6
1.05	1.64	1.0247	5	1745	3.5
1.08	1.51	1.0392	5	1750	3.3
1.02	1.61	1.0100	5	1755	3.5
1.1	1.73	1.0488	5	1805	3.7
0.55	0.82	0.7416	5	1810	2
0.63	0.94	0.7937	5	1815	2.3
0.7	1.06	0.8367	5	1820	2.6
0.72	1.10	0.8485	5	1825	2.8
0.79	1.22	0.8888	5	1830	3
0.85	1.33	0.9220	5	1835	3.1
1.1	1.72	1.0488	5	1840	3.7
1	1.57	1.0000	5	1845	3.4
1.03	1.64	1.0149	5	1850	3.5
1.09	1.74	1.0440	5	1855	3.7
1.1	1.77	1.0488	5	1900	3.8
1.05	1.69	1.0247	5	1905	3.6

			120	120	
0.8767	1.3496	0.9298	5	1790.21	3.06
Velocity Head ^Ps	Pressure Diff ^H	Sqrt ^Ps	Sampling Time	Clock Time	Vacuum

Probe Temperature Exit (°F)	Filter Temperature (°F)	Impinger Temperature Outlet (°F)	Vs	**Point to Point Isokinetics**
42	40	35	44.3271	102.44
41	40	36	47.2164	101.35
41	38	36	50.6388	100.03
40	38	37	51.4300	98.98
40	37	35	51.9004	99.52
38	39	34	57.7226	97.48
38	37	35	61.4706	101.17
37	36	36	64.4059	100.19
36	38	36	62.8615	98.84
39	38	36	63.8821	103.56
38	37	37	62.0196	95.96
37	39	39	64.5358	99.31
36	37	37	45.5878	98.17
36	37	35	48.8399	95.21
38	36	36	51.4300	97.95
38	35	38	52.1069	98.96
39	36	37	54.6362	97.12
40	39	35	56.6159	99.26
40	38	36	64.5358	100.31
39	38	37	61.5944	97.50
37	38	38	62.4487	98.91
37	36	36	64.3064	101.42
35	37	38	64.4709	101.93
36	38	36	63.0521	97.52

38.25	37.58	36.29
Probe Exit Temperature (°F)	Filter Temperature (°F)	Outlet Impinger Temperature (°F)

POST TEST CALCULATION

VOLUME DRY GAS
Vm(std) = 65.5825

VOLUME H2O VAPOR
Vw(std) = 0.3483

MOISTURE CONTENT
Bws = 0.0053

Vm 88.1980
Vm(std) = 65.5825

Vic(mls) 7.4
Vw(std) = 0.3483

MOL WT DRY STACK GASES

Mds = 28.9120

MOL WT WET STACK GASES

Mws = 28.8544

STACK VELOCITY
Vs = 57.1674

Kp 85.49
Vs = 57.1674

DRY STACK FLOW RATE

Q(std) = 5.5864E+05

ISOKINETIC CALCULATION

An = 1.9897E-04

% ISO = 99.1755

PARTICULATE CONCENTRATION
Cs = 9.7587E-05

Mn 6.4
Cs = 9.7587E-05
lbs/dscf = 2.1514E-07
grains/dscf = 0.0015
lbs/hr = 0.1202

Initial Leak Check Rate
Finish 555.014
Start 555.012
Rate = 0.0020

Pitot Tubes
A = OK
B = OK

Vac. = 20.4

Final Leak Check Rate
Finish 643.705
Start 643.702
Rate = 0.0030

Pitot Tubes
A = OK
B = OK

Vac. = 21

American Environmental Testing Company, Inc.
565 South Birch Drive
Spanish Fork, Utah 84660
(801) 266-7111

LABORATORY DATA
EPA Method 5

Company: Chemstar Lime Run Number: #3 RAC

Sampling Location: DC-120 Date: 2-12-93

Moisture Collected

	Initial Weight	Final Weight	Weight Gain
Impinger 1	568.1	564.0	-4.1
Impinger 2	580.9	581.8	0.9
Impinger 3	531.8	533.1	1.3
Impinger 4	595.1	600.6	5.5

Total Gain = 7.4 g Total

Particulate Collected

Front - Half Analysis (Nozzle, Probe, Filter and Oven Glassware)

1. Filter Final Weight 0.6304
2. Filter Tare Weight 0.6260 RC-#3
3. Total Filter Weight ~~0.0020~~ 0.0044 = 4.4 mg
   After Weight 7-23
4. Particulate caught in nozzle, probe and glassware 0.0020 = 2.0 mg
5. Total Front - Half Catch 0.0064 = 6.4 mg

6.4 mg Total

Back - Half Analysis (Impingers, and Connecting Glassware)

1. Particulate caught in impingers evaporated down at less than 120° F. 0.8 mg

Total Particulate Catch (Sum of Front and Back - Half Catches)

7.2 mg

AMERICAN ENVIRONMENTAL TESTING, INCORPORATED

565 So. Birch Drive 801-266-7111

Spanish Fork, Utah 84660

POST TEST EVAPORATION

COMPANY: Chemstar Lime

SOURCE: DC-120

DATE: 2-12-93

ACETONE BLANK

Volume of Liquid: 150 ml

Final Weight: 96.1319

Tare Weight: 96.1317

Residue: 0.0002

WATER BLANK

Volume of Liquid: 250 ml

Final Weight: 102.6914

Tare Weight: 102.6911

Residue: 0.0003

RUN #1

B-1

Volume of Liquid: 150 mls (adj)

Color: Clear

Final Weight: 98.4972

Tare Weight: 98.4951

Residue & Blank: 0.0021

- Blank: 0.0002

Residue: 0.0019 = 1.9 mg

RUN #1

X-3

Volume of Liquid: 250 mls (adj)

Color: Clear

Final Weight: 101.9122

Tare Weight: 101.9110

Residue & Blank: 0.0012

- Blank: 0.0003

Residue: 0.0009 = 0.9 mg

RUN #2

B-3

Volume of Liquid: 150 mls (adj)

Color: Clear

Final Weight: 100.6320

Tare Weight: 100.6363

Residue & Blank: 0.0027

- Blank: 0.0002

Residue: 0.0025 = 2.5 mg

RUN #2

X-5

Volume of Liquid: 250 mls (adj)

Color: Clear

Final Weight: 102.3129

Tare Weight: 102.3113

Residue & Blank: 0.0016

- Blank: 0.0003

Residue: 0.0013 = 1.3 mg

RUN #3

B-6

Volume of Liquid: 150 mls (adj)

Color: Clear

Final Weight: 98.7183

Tare Weight: 98.7161

Residue & Blank: 0.0022

- Blank: 0.0002

Residue: 0.0020 = 2.0 mg

RUN #3

X-2

Volume of Liquid: 250 mls (adj)

Color: Clear

Final Weight: 102.5204

Tare Weight: 102.5193

Residue & Blank: 0.0011

- Blank: 0.0003

Residue: 0.0008 = 0.8 mg

American Environmental
Testing Company, Inc.
565 South Birch Drive
Spanish Fork, Utah 84660
801-266-7111

Chemstar Lime
Pennile Plant (Bancroft, Ida.
2/12-93
DC-120

ORSAT ANALYSIS

(Ave. of 3 Analyses Each)

RAC Box

TEST NO.	DESCRIPTION	VOLUME PERCENT - DRY			
		NITROGEN	OXYGEN	CARBON DIOXIDE	CARBON MONOXIDE
#1	EPA 5	78.9	20.9	0.2	<0.1
Test #1	Compl.	78.9	20.9	0.2	<0.1
		78.9	20.9	0.2	<0.1
	AVERAGE	78.9	20.9	0.2	<0.1

AMERICAN ENVIRONMENTAL TESTING, INCORPORATED
565 So. Birch Drive 801-266-7111
Spanish Fork, Utah 84660

PARTICULATE FIELD DATA FORMAT

1	Plant	Chemstar Lime Plant
2	City	Bancroft, Idaho
3	Location	DC - 316
4	Operator	Rick Hawkins
5	Date	2/15/93
6	Method and Run	EPA 5 - #1 Compliance
7	Stack Diameter (in)	47
8	Sample Box Number	CR 1A
9	Meter Box Number	CR (097)
10	Meter ^H@	2.116
11	Meter Calibration, Y	1.142
12	Pitot Tube, Cp	0.8413
13	Probe Length (ft)	6' - A
14	Probe Liner Material	Stainless Steel
15	Probe Heater Setting (°F)	248
16	Ambient Temperature (°F)	25
17	Barometeric Press., Pb (in Hg)	23.45
18	Assumed Moisture (%)	10
19	Static Pressure, Ps (in H20)	-0.25
20	C Factor	0
21	Reference ^P (in H20)	1.38
22	Nozzle Identification Number	*3/16 - 9
23	Nozzle Diameter (in)	0.188
24	Thermometer Number	1-A
25	Pretest Leak Rate (CFM)	0.0010
26	Leak Check Vacuum (in H20)	20
27	Filter Number	CL - #10
28	Gas Analysis	
29	CO (%)	0
30	CO2 (%)	21.40
31	O2 (%)	7.50
	N2 (%)	71.10

PRETEST CALCULATIONS

NOZZLE DIAMETER

Dn = 0.188

constant	0.0357
Qm	0.75
Pb(in HG)	23.45
Pgm(in H2O)	-0.25
Pm	23.4316
Cp	0.8413
Tm(°F)	85
Tm(°R)	545
Bwm	0
Bws	0.1
Ts(°F)	200
Ts(°R)	660
Mds	31.724
Ms	30.3516
Pb(in HG)	23.45
Pgs(in H2O)	-0.25
Ps	23.4316
(^P)avg	1.38

Dn = 0.1846

PRETEST DATA

Cp	0.8413
Imp V(H2O)(ml)	67.5000
Gel H2O(g)	12.0000
V(H2O)(ml)	127.8000
Vm(acf)	49.2300
^h avg	0.2000
Vwc	6.0155
Vmc	42.6986

Bws = 0.1235

ISOKINETIC ^H

^H = 0.7249

constant	849.8000
^H@	1.0000
Mds	31.7240
Mm	31.7240
K	0.5253
^P	1.3800

^H = 0.7249

Sample Point	Meter Temperature Outlet (°F)	Meter Temperature Inlet (°F)	Stack Temp Ts (°F)	Gas Volume Vm (ft3)	Gas Volume difference (ft3)
starting				4378.838	
1	78	79	200	4379.624	0.79
2	79	78	201	4380.88	1.26
3	78	78	202	4382.31	1.43
4	79	79	199	4383.78	1.47
5	78	79	201	4385.24	1.46
6	78	78	202	4386.74	1.50
7	78	79	203	4388.211	1.47
8	78	78	200	4389.77	1.56
9	77	77	200	4391.24	1.47
10	77	77	201	4392.74	1.50
11	77	78	203	4394.313	1.57
12	77	77	210	4395.91	1.60
13	76	77	204	4397.46	1.55
14	75	76	205	4399.03	1.57
15	74	74	203	4400.61	1.58
16	73	73	202	4402.161	1.55
17	73	72	201	4403.74	1.58
18	72	73	203	4405.27	1.53
19	72	71	201	4406.78	1.51
20	71	72	200	4408.266	1.49
21	71	71	199	4409.745	1.48
22	71	71	201	4411.22	1.48
23	71	71	200	4412.73	1.51
24	71	71	199	4414.138	1.41
avg °F		75.27	201.67		
avg °R		535.27	661.67		
total =				35.3000	35.30
average =	75.17	75.38	201.67		
Sample Point	Meter Temperature Inlet (°F)	Meter Temperature Outlet (°F)	Stack Temp (°F) T	Gas Volume Vm	Gas Volume Vm

Velocity Head ^Ps (in H20)	Pressure Diff ^H (in H20)	Sqrt ^Ps	Sampling Time (min)	Clock Time (24 hrs)	Vacuum (in Hg)
				1120	
1.05	1.15	1.0247	2.5	1122.5	3.1
1.05	1.15	1.0247	2.5	1125	3.1
1.4	1.53	1.1832	2.5	1127.5	3.9
1.45	1.60	1.2042	2.5	1130	4
1.55	1.70	1.2450	2.5	1134	3.9
1.6	1.75	1.2649	2.5	1136.5	4.1
1.5	1.64	1.2247	2.5	1139	3.9
1.6	1.75	1.2649	2.5	1143	4
1.55	1.70	1.2450	2.5	1145.5	3.9
1.55	1.69	1.2450	2.5	1148	4
1.65	1.80	1.2845	2.5	1150.5	4.1
1.65	1.78	1.2845	2.5	1153	4
1.6	1.74	1.2649	2.5	1158	3.7
1.6	1.73	1.2649	2.5	1200.5	3.6
1.65	1.79	1.2845	2.5	1203	3.8
1.6	1.73	1.2649	2.5	1205.5	3.6
1.65	1.79	1.2845	2.5	1208	3.4
1.6	1.73	1.2649	2.5	1210.5	3.4
1.65	1.78	1.2845	2.5	1213	3.4
1.5	1.62	1.2247	2.5	1215.5	3.1
1.55	1.68	1.2450	2.5	1217	3
1.5	1.62	1.2247	2.5	1219.5	3.1
1.55	1.68	1.2450	2.5	1222	3.3
1.45	1.57	1.2042	2.5	1224.5	3.2

			60	60	
1.5208	1.6543	1.2313	2.5	1172.98	3.61
Velocity Head ^Ps	Pressure Diff ^H	Sqrt ^Ps	Sampling Time	Clock Time	Vacuum

Probe Temperature Exit (°F)	Filter Temperature (°F)	Impinger Temperature Outlet (°F)	Vs	Point to Point Isokinetics
255	252	46	71.2907	60.72
250	251	46	71.3447	97.10
255	257	45	82.4440	95.99
247	255	45	83.7130	96.59
250	256	45	86.6828	93.03
251	259	45	88.1364	94.24
251	260	46	85.4021	95.41
250	249	46	88.0031	97.80
252	258	45	86.6172	93.83
250	260	46	86.6828	95.82
251	257	46	89.5705	97.48
251	256	45	90.0421	99.57
255	256	45	88.2694	97.77
253	257	46	88.3358	99.26
250	249	45	89.5705	98.48
248	253	46	88.1364	98.25
251	253	46	89.4353	98.52
256	257	46	88.2029	97.07
250	248	44	89.4353	94.37
248	250	44	85.2087	97.28
251	255	44	86.5515	95.27
248	252	46	85.2732	96.72
251	258	46	86.6172	97.34
250	253	45	83.7130	93.75

251.00	254.71	45.38
Probe Exit Temperature (°F)	Filter Temperature (°F)	Outlet Impinger Temperature (°F)

POST TEST CALCULATION

VOLUME DRY GAS

Vm(std) = 30.7685

VOLUME H2O VAPOR

Vw(std) = 4.1233

MOISTURE CONTENT

Bws = 0.1182

Vm 35.3000

Vm(std) = 30.7685

Vic(mls) 87.6

Vw(std) = 4.1233

MOL WT DRY STACK GASE!

Mds = 31.7240

MOL WT WET STACK GASE!

Mws = 30.1022

STACK VELOCITY

Vs = 85.7757

Kp 85.49

Vs = 85.7757

DRY STACK FLOW RATE

Q(std) = 2.0503E+06

ISOKINETIC CALCULATION

An = 1.9277E-04

% ISO = 95.3052

PARTICULATI CONCENTRATION

Cs = 2.9251E-04

Mn 9

Cs = 2.9251E-04

lbs/dscf = 6.4486E-07

grains/dscf : 0.0045

lbs/hr = 1.3221

NOx ppm =	22.76
CO ppm =	68.95
SO2 ppm =	0.07
NOx lbs/hr =	5.57
CO lbs/hr =	10.29
SO2 lbs/hr =	0.02

Initial Leak Check Rate

Finish 4378.269

Start 4378.268

Rate = 0.0010

Pitot Tubes

A = OK

B = OK

Vac. = 20

Final Leak Check Rate

Finish 4414.368

Start 4414.365

Rate = 0.0030

Pitot Tubes

A = OK

B = OK

Vac. = 19

American Environmental Testing Company, Inc.
565 South Birch Drive
Spanish Fork, Utah 84660
(801) 266-7111

LABORATORY DATA
EPA Method 5

Company: Chinstar Lime Run Number: #1 CK Box

Sampling Location: Kiln Dc - ~~305~~ 316 Date: 2-15-93

Moisture Collected

	Initial Weight	Final Weight	Weight Gain
Impinger 1	522.8	572.7	49.9
Impinger 2	556.5	583.0	26.5
Impinger 3	459.3	460.4	1.1
Impinger 4	688.6	698.5	10.1

Total Gain = 87.6 g Total

Particulate Collected

Front - Half Analysis (Nozzle, Probe, Filter and Oven Glassware)

1. Filter Final Weight 0.7485
2. Filter Tare Weight 0.7478 CL-#10
3. Total Filter Weight 0.0007 = 0.7 mg.
4. Particulate caught in nozzle, probe and glassware 8.3
5. Total Front - Half Catch 9.0 mg.

Back - Half Analysis (Impingers, and Connecting Glassware)

1. Particulate caught in impingers evaporated down at less than 120° F. 0.8 mg.

Total Particulate Catch (Sum of Front and Back - Half Catches)

9.8 mg.

American Environmental
Testing Company, Inc.
565 South Birch Drive
Spanish Fork, Utah 84660
801-266-7111

Chemstar Lime Co.
Bancroft, Idaho
Pennville Plant.

DC-316

ORSAT ANALYSIS

(Ave. of 3 Analyses Each)

TEST NO.	DESCRIPTION	VOLUME PERCENT - DRY			
		NITROGEN	OXYGEN	CARBON DIOXIDE	CARBON MONOXIDE
#1	EPA Method	71.0	7.6	21.4	<0.1
5	Compliance.	71.2	7.5	21.3	<0.1
		71.1	7.4	21.5	<0.1
	AVERAGE	71.1	7.5	21.4	<0.1

AMERICAN ENVIRONMENTAL TESTING, INCORPORATED
565 So. Birch Drive 801-266-7111
Spanish Fork, Utah 84660

PARTICULATE FIELD DATA FORMAT

1	Plant	Chemstar Lime Plant
2	City	Bancroft, Idaho
3	Location	DC - 316
4	Operator	Rick Hawkins
5	Date	2/15/93
6	Method and Run	EPA 5 - #2 Compliance
7	Stack Diameter (in)	47
8	Sample Box Number	CR 1A
9	Meter Box Number	CR (097)
10	Meter ^H@	2.116
11	Meter Calibration, Y	1.142
12	Pitot Tube, Cp	0.8413
13	Probe Length (ft)	6' - A
14	Probe Liner Material	Stainless Steel
15	Probe Heater Setting (°F)	248
16	Ambient Temperature (°F)	30
17	Barometeric Press., Pb (in Hg)	23.3
18	Assumed Moisture (%)	10
19	Static Pressure, Ps (in H2O)	-0.25
20	C Factor	0
21	Reference ^P (in H2O)	1.38
22	Nozzle Identification Number	#3/16 - 9
23	Nozzle Diameter (in)	0.188
24	Thermometer Number	1-A
25	Pretest Leak Rate (CFM)	0.0010
26	Leak Check Vacuum (in H2O)	19.8
27	Filter Number	CL - #11
28	Gas Analysis	
29	CO (%)	0
30	CO2 (%)	21.50
31	O2 (%)	7.46
	N2 (%)	71.04

PRETEST CALCULATIONS

NOZZLE DIAMETER

Dn = 0.188

constant	0.0357
Qm	0.75
Pb(in HG)	23.3
Pgm(in H20)	-0.25
Pm	23.2816
Cp	0.8413
Tm(°F)	85
Tm(°R)	545
Bwm	0
Bws	0.1
Ts(°F)	200
Ts(°R)	660
Mds	31.7384
Ms	30.3646
Pb(in HG)	23.3
Pgs(in H20)	-0.25
Ps	23.2816
(^P)avg	1.38

Dn = 0.1844

PRETEST DATA

Cp	0.8413
Imp V(H20)(ml)	67.5000
Gel H20(g)	12.0000
V(H20)(ml)	127.8000
Vm(acf)	49.2300
^h avg	0.2000
Vwc	6.0155
Vmc	42.4256

Bws = 0.1242

ISOKINETIC ^H

^H = 0.7249

constant	849.8000
^H@	1.0000
Mds	31.7384
Mm	31.7384
K	0.5253
^P	1.3800

^H = 0.7249

Sample Point	Meter Temperature Outlet (°F)	Meter Temperature Inlet (°F)	Stack Temp Ts (°F)	Gas Volume Vm (ft3)	Gas Volume difference (ft3)
starting				4414.738	
1	68	68	204	4416.09	1.35
2	67	68	202	4417.48	1.39
3	68	67	200	4418.87	1.39
4	67	67	201	4420.351	1.48
5	66	67	203	4421.89	1.54
6	67	66	202	4423.37	1.48
7	66	65	205	4424.85	1.48
8	66	65	204	4426.392	1.54
9	66	65	202	4427.93	1.54
10	66	65	201	4429.42	1.49
11	65	64	203	4430.97	1.55
12	65	66	205	4432.461	1.49
13	65	65	200	4433.98	1.52
14	65	66	201	4435.45	1.47
15	65	66	201	4436.99	1.54
16	66	65	204	4438.56	1.57
17	65	65	202	4440.07	1.51
18	66	65	204	4441.58	1.51
19	65	64	200	4443.13	1.55
20	64	63	198	4444.649	1.52
21	64	64	202	4446.18	1.53
22	64	63	200	4447.69	1.51
23	66	63	203	4449.21	1.52
24	65	63	205	4450.911	1.70
avg °F		65.46	202.17		
avg °R		525.46	662.17		
total =				36.1730	36.17
average =	65.71	65.21	202.17		
Sample Point	Meter Temperature Inlet (°F)	Meter Temperature Outlet (°F)	Stack Temp (°F) T	Gas Volume Vm	Gas Volume Vm

Velocity Head ^Ps (in H20)	Pressure Diff ^H (in H20)	Sqrt ^Ps	Sampling Time (min)	Clock Time (24 hrs)	Vacuum (in Hg)
				1400	
1.4	1.50	1.1832	2.5	1402.5	3.9
1.3	1.39	1.1402	2.5	1405	4
1.4	1.50	1.1832	2.5	1407.5	3.8
1.55	1.66	1.2450	2.5	1411.5	4.2
1.6	1.71	1.2649	2.5	1414	4.2
1.55	1.66	1.2450	2.5	1416.5	4.1
1.55	1.65	1.2450	2.5	1419	4.1
1.65	1.76	1.2845	2.5	1423	4.3
1.6	1.71	1.2649	2.5	1425.5	4
1.6	1.71	1.2649	2.5	1428	4.1
1.65	1.76	1.2845	2.5	1430.5	4
1.6	1.70	1.2649	2.5	1434.5	4.1
1.55	1.66	1.2450	2.5	1437	3.9
1.55	1.66	1.2450	2.5	1439.5	3.9
1.65	1.76	1.2845	2.5	1442	4
1.6	1.70	1.2649	2.5	1446	4
1.6	1.71	1.2649	2.5	1448.5	3.9
1.55	1.65	1.2450	2.5	1451	3.8
1.65	1.76	1.2845	2.5	1453.5	4
1.55	1.66	1.2450	2.5	1457.5	3.9
1.65	1.76	1.2845	2.5	1501.5	4
1.55	1.65	1.2450	2.5	1504	3.8
1.6	1.70	1.2649	2.5	1506.5	3.9
1.4	1.48	1.1832	2.5	1509	3.7

			60	60	
1.5562	1.6609	1.2469	2.5	1442.23	3.98
Velocity Head ^Ps	Pressure Diff ^H	Sqrt ^Ps	Sampling Time	Clock Time	Vacuum

Probe Temperature Exit (°F)	Filter Temperature (°F)	Impinger Temperature Outlet (°F)	Vs	Point to Point Isokinetics
255	258	46	82.5624	91.05
250	256	47	79.4392	97.05
251	256	46	82.3133	93.41
248	256	45	86.6763	94.78
250	255	45	88.1964	97.18
253	258	44	86.7419	94.87
249	255	43	86.9382	95.24
251	254	43	89.6314	96.14
252	253	44	88.1298	97.21
249	248	44	88.0633	94.11
253	251	43	89.5638	96.73
259	255	43	88.3293	94.45
258	250	44	86.6108	97.47
257	255	44	86.6763	94.32
260	257	44	89.4287	95.80
258	259	44	88.2629	99.39
260	258	44	88.1298	95.53
257	255	43	86.8728	97.10
252	251	43	89.3610	96.51
250	248	42	86.4794	97.57
252	248	43	89.4963	95.55
258	256	43	86.6108	97.14
250	263	42	88.1964	96.31
249	260	42	82.6245	115.42

253.38	254.79	43.79
Probe Exit Temperature (°F)	Filter Temperature (°F)	Outlet Impinger Temperature (°F)

POST TEST CALCULATION

VOLUME DRY GAS

Vm(std) = 31.3295

VOLUME H2O VAPOR

Vw(std) = 3.6620

MOISTURE CONTENT

Bws = 0.1047

Vm	36.1730	Vic(mls)	77.8
Vm(std) =	31.3295	Vw(std) =	3.6620

MOL WT DRY STACK GASES

Mds = 31.7384

MOL WT WET STACK GASES

Mws = 30.3006

STACK VELOCITY

Vs = 86.8892

Kp	85.49
Vs =	86.8892

DRY STACK FLOW RATE

Q(std) = 2.0936E+06

ISOKINETIC CALCULATION

An = 1.9277E-04

% ISO = 96.6466

PARTICULATE CONCENTRATION

Cs = 3.0642E-04

Mn	9.6
Cs =	3.0642E-04
lbs/dscf =	6.7553E-07
grains/dscf :	0.0047
lbs/hr =	1.4143

NOx ppm =	24.66
CO ppm =	78.88
SO2 ppm =	0.08
NOx lbs/hr =	6.16
CO lbs/hr =	12.02
SO2 lbs/hr =	0.03

Initial Leak Check Rate

Finish	4414.703	Pitot Tubes
Start	4414.702	A = OK
Rate = 0.0010		B = OK
	Vac. = 19.8	

Final Leak Check Rate

Finish	4451.028	Pitot Tubes
Start	4451.022	A = OK
Rate = 0.0060		B = OK
	Vac. = 20.5	

American Environmental Testing Company, Inc.
565 South Birch Drive
Spanish Fork, Utah 84660
(801) 266-7111

LABORATORY DATA
EPA Method 5

Company: Chemstar Lime Run Number: #2 CR Box

Sampling Location: Kiln DC-316 Date: 2-15-93

Moisture Collected

	Initial Weight	Final Weight	Weight Gain
Impinger 1	523.9	581.1	57.2
Impinger 2	554.1	566.9	12.8
Impinger 3	460.3	461.3	1
Impinger 4	698.4	705.2	6.8

Total Gain = 77.8 mls

Particulate Collected

Front - Half Analysis (Nozzle, Probe, Filter and Oven Glassware)

1. Filter Final Weight 0.7461
2. Filter Tare Weight 0.7448 CL-#11
3. Total Filter Weight 0.0013 = 1.3 mg.
4. Particulate caught in nozzle, probe and glassware 8.3 mg.
5. Total Front - Half Catch 9.6 mg.

Back - Half Analysis (Impingers, and Connecting Glassware)

1. Particulate caught in impingers evaporated down at less than 120° F. 1.6 mg.

Total Particulate Catch (Sum of Front and Back - Half Catches)

11.2 mg.

American Environmental
Testing Company, Inc.
565 South Birch Drive
Spanish Fork, Utah 84660
801-266-7111

Chemstar Lime Co.
Bancroft, Idaho
Tennile Plant.
DC-3ib
Main Kiln

ORSAT ANALYSIS

(Ave. of 3 Analyses Each)

TEST NO.	DESCRIPTION	VOLUME PERCENT - DRY			
		NITROGEN	OXYGEN	CARBON DIOXIDE	CARBON MONOXIDE
#2	EPA Method	71.1	7.4	21.5	<0.1
5	Compliance	71.0	7.5	21.5	<0.1
		71.1	7.4	21.5	<0.1
	AVERAGE	71.04	7.46	21.5	<0.1

AMERICAN ENVIRONMENTAL TESTING, INCORPORATED
565 So. Birch Drive 801-266-7111
Spanish Fork, Utah 84660

PARTICULATE FIELD DATA FORMAT

1	Plant	Chemstar Lime Plant
2	City	Bancroft, Idaho
3	Location	DC - 316
4	Operator	Rick Hawkins
5	Date	2/15/93
6	Method and Run	EPA 5 - #3 Compliance
7	Stack Diameter (in)	47
8	Sample Box Number	CR 1A
9	Meter Box Number	CR (097)
10	Meter ^H@	2.116
11	Meter Calibration, Y	1.142
12	Pitot Tube, Cp	0.8413
13	Probe Length (ft)	6' - A
14	Probe Liner Material	Stainless Steel
15	Probe Heater Setting (°F)	248
16	Ambient Temperature (°F)	24
17	Barometeric Press., Pb (in Hg)	23.1
18	Assumed Moisture (%)	10
19	Static Pressure, Ps (in H20)	-0.25
20	C Factor	0
21	Reference ^P (in H20)	1.38
22	Nozzle Identification Number	*3/16 - 9
23	Nozzle Diameter (in)	0.188
24	Thermometer Number	1-A
25	Pretest Leak Rate (CFM)	0.0010
26	Leak Check Vacuum (in H20)	19.8
27	Filter Number	CL - #12
28	Gas Analysis	
29	CO (%)	0
30	CO2 (%)	22.10
31	O2 (%)	7.34
	N2 (%)	70.56

PRETEST CALCULATIONS

NOZZLE DIAMETER

Dn = 0.188

constant	0.0357
Qm	0.75
Pb(in HG)	23.1
Pgm(in H20)	-0.25
Pm	23.0816
Cp	0.8413
Tm(°F)	85
Tm(°R)	545
Bwm	0
Bws	0.1
Ts(°F)	200
Ts(°R)	660
Mds	31.8296
Ms	30.4466
Pb(in HG)	23.1
Pgs(in H20)	-0.25
Ps	23.0816
(^P)avg	1.38

Dn = 0.1841

PRETEST DATA

Cp	0.8413
Imp V(H20)(ml)	67.5000
Gel H20(g)	12.0000
V(H20)(ml)	127.8000
Vm(acf)	49.2300
^h avg	0.2000
Vwc	6.0155
Vmc	42.0617

Bws = 0.1251

ISOKINETIC ^H

^H = 0.7250

constant	849.8000
^H@	1.0000
Mds	31.8296
Mm	31.8296
K	0.5254
^P	1.3800

^H = 0.7250

Sample Point	Meter Temperature Outlet (°F)	Meter Temperature Inlet (°F)	Stack Temp Ts (°F)	Gas Volume Vm (ft3)	Gas Volume difference (ft3)
starting				4451.337	
1	62	62	202	4452.8	1.46
2	64	63	201	4454.25	1.45
3	63	62	203	4455.65	1.40
4	62	63	204	4457.098	1.45
5	62	60	206	4458.59	1.49
6	63	61	207	4460.08	1.49
7	63	61	203	4461.54	1.46
8	63	61	204	4463.068	1.53
9	62	61	209	4464.54	1.47
10	63	62	208	4466	1.46
11	62	62	207	4467.47	1.47
12	63	62	205	4468.991	1.52
13	63	62	206	4470.44	1.45
14	63	63	207	4471.89	1.45
15	63	62	207	4473.46	1.57
16	63	63	209	4474.922	1.46
17	63	62	210	4476.39	1.47
18	63	63	207	4477.78	1.39
19	63	62	204	4479.28	1.50
20	63	62	203	4480.78	1.50
21	63	62	205	4482.26	1.48
22	63	62	205	4483.74	1.48
23	63	63	208	4485.19	1.45
24	63	32	202	4486.59	1.40
avg °F		61.79	205.50		
avg °R		521.79	665.50		
total =				35.2530	35.25
average =	62.83	60.75	205.50		
Sample Point	Meter Temperature Inlet (°F)	Meter Temperature Outlet (°F)	Stack Temp (°F) T	Gas Volume Vm	Gas Volume Vm

Velocity Head ^Ps (in H20)	Pressure Diff ^H (in H20)	Sqrt ^Ps	Sampling Time (min)	Clock Time (24 hrs)	Vacuum (in Hg)
				1620	
1.5	1.59	1.2247	2.5	1622.5	3
1.3	1.39	1.1402	2.5	1625	3
1.4	1.48	1.1832	2.5	1627.5	2.9
1.5	1.59	1.2247	2.5	1630	3
1.6	1.68	1.2649	2.5	1634	3.1
1.6	1.68	1.2649	2.5	1636.5	3.2
1.5	1.59	1.2247	2.5	1639	3
1.65	1.74	1.2845	2.5	1641.5	3.5
1.55	1.63	1.2450	2.5	1645.5	3.2
1.55	1.63	1.2450	2.5	1648	3.2
1.6	1.68	1.2649	2.5	1650.5	3.3
1.65	1.74	1.2845	2.5	1655	3.4
1.6	1.69	1.2649	2.5	1657.5	3.3
1.5	1.58	1.2247	2.5	1700	3.1
1.65	1.74	1.2845	2.5	1702.5	3.2
1.55	1.63	1.2450	2.5	1706.5	3
1.6	1.68	1.2649	2.5	1709	3.1
1.45	1.53	1.2042	2.5	1711.5	2.8
1.6	1.69	1.2649	2.5	1714	2.9
1.6	1.70	1.2649	2.5	1716.5	2.9
1.6	1.69	1.2649	2.5	1719	2.9
1.55	1.64	1.2450	2.5	1721.5	2.8
1.6	1.69	1.2649	2.5	1724	2.9
1.45	1.50	1.2042	2.5	1726.5	2.7

			60	60	
1.5479	1.6326	1.2437	2.5	1673.48	3.06
Velocity Head ^Ps	Pressure Diff ^H	Sqrt ^Ps	Sampling Time	Clock Time	Vacuum

Probe Temperature Exit (°F)	Filter Temperature (°F)	Impinger Temperature Outlet (°F)	Vs	Point to Point Isokinetics
250	256	42	85.5176	95.49
251	254	42	79.5524	101.26
256	255	42	82.6803	94.55
250	252	43	85.6467	94.57
249	254	43	88.5887	94.76
253	260	42	88.6551	94.54
244	251	42	85.5822	95.36
249	255	41	89.8270	95.28
251	253	41	87.3896	95.10
250	255	40	87.3243	94.10
254	258	41	88.6551	93.27
257	260	42	89.8947	94.83
254	255	42	88.5887	91.79
253	256	41	85.8400	94.83
255	259	41	90.0297	98.03
251	248	40	87.3896	94.21
252	256	42	88.8543	93.27
254	249	41	84.3972	92.45
252	257	42	88.4555	94.88
250	251	42	88.3889	94.81
251	249	43	88.5221	93.69
253	256	42	87.1280	95.17
258	259	41	88.7216	91.92
260	252	40	84.0803	95.31

252.38	254.58	41.58
Probe Exit Temperature (°F)	Filter Temperature (°F)	Outlet Impinger Temperature (°F)

POST TEST CALCULATION

VOLUME DRY GAS

Vm(std) = 30.2692

VOLUME H2O VAPOR

Vw(std) = 3.4079

MOISTURE CONTENT

Bws = 0.1012

Vm 35.2530

Vm(std) = 30.2692

Vic(mls) 72.4

Vw(std) = 3.4079

MOL WT DRY STACK GASES

Mds = 31.8296

MOL WT WET STACK GASES

Mws = 30.4301

STACK VELOCITY

Vs = 87.0693

Kp 85.49

Vs = 87.0693

DRY STACK FLOW RATE

Q(std) = 2.0775E+06

ISOKINETIC CALCULATION

An = 1.9277E-04

% ISO = 94.7074

PARTICULATE CONCENTRATION

Cs = 2.4117E-04

Mn 7.3

Cs = 2.4117E-04

lbs/dscf = 5.3168E-07

grains/dscf : 0.0037

lbs/hr = 1.1046

NOx ppm =	24.76
CO ppm =	76.87
SO2 ppm =	0.11
NOx lbs/hr =	6.14
CO lbs/hr =	11.63
SO2 lbs/hr =	0.04

Initial Leak Check Rate

Finish 4451.312

Start 4451.311

Rate = 0.0010

Pitot Tubes

A = OK

B = OK

Vac. = 19.8

Final Leak Check Rate

Finish 4486.783

Start 4486.781

Rate = 0.0020

Pitot Tubes

A = OK

B = OK

Vac. = 19.5

American Environmental Testing Company, Inc.
565 South Birch Drive
Spanish Fork, Utah 84660
(801) 266-7111

LABORATORY DATA
EPA Method 5

Company: Chemstar Lime Run Number: #3 CR Box

Sampling Location: Kiln DC 316 Date: 2/15/93

Moisture Collected

	Initial Weight	Final Weight	Weight Gain
Impinger 1	525.3	581.6	+56.1
Impinger 2	557.0	565.8	+ ~~[illegible]~~ 8.8
Impinger 3	460.1	~~465.3~~ 461.1	1.0
Impinger 4	705.1	711.6	6.5

Total Gain = 72.4 g total

Particulate Collected

Front - Half Analysis (Nozzle, Probe, Filter and Oven Glassware)

1. Filter Final Weight 0.7520
2. Filter Tare Weight 0.7509 CL #12
3. Total Filter Weight 0.0011 = 1.1 mg.
4. Particulate caught in nozzle, probe and glassware 6.2 mg.
5. Total Front - Half Catch 7.3 mg.

Back - Half Analysis (Impingers, and Connecting Glassware)

1. Particulate caught in impingers evaporated down at less than 120° F. 1.1 mg.

Total Particulate Catch (Sum of Front and Back - ~~Half Catches~~)

8.4 mg.

American Environmental
Testing Company, Inc.
565 South Birch Drive
Spanish Fork, Utah 84660
801-266-7111

Chemstar Lime Co.
Bancroft Idaho.
Ten mile Plant.
DC-316

ORSAT ANALYSIS

(Ave. of 3 Analyses Each)

TEST NO.	DESCRIPTION	VOLUME PERCENT - DRY			
		NITROGEN	OXYGEN	CARBON DIOXIDE	CARBON MONOXIDE
#3	EPA Method	70.66	7.34	22.0	<0.1
5	Compliance.	70.55	7.35	22.1	<0.1
		70.47	7.33	22.2	<0.1
	AVERAGE	70.56	7.34	22.1	<0.1

AMERICAN ENVIRONMENTAL TESTING, INCORPORATED
565 So. Birch Drive 801-266-7111
Spanish Fork, Utah 84660

POST TEST EVAPORATION

COMPANY: Chemstar Lime.
SOURCE: DC-316
DATE: 2/16-93 (2/15/93 run).

ACETONE BLANK (WC Water)		WATER BLANK		
Volume of Liquid	400 mls.	Volume of Liquid	250 mls.	
Final Weight	103.1411	Final Weight	99.9436	
Tare Weight	103.1410	Tare Weight	99.9436	2-T
Residue	0.0001 = 0.1mg	Residue	0	

1-A

RUN #1		RUN #1		
Volume of Liquid	400 mls.	Volume of Liquid	87.6 + wash = @250 mls.	
Color	Clear. no visible part.	Color	opac.	
Final Weight	114.0828	Final Weight	99.1350	
Tare Weight	114.0752	Tare Weight	99.1342	
Residue & Blank	0.0076	Residue & Blank	0.0008	2-I
- Blank	0.0001	- Blank	0	
Residue	0.0075 = 7.5mg.	Residue	0.0008 = 0.8mg.	

1-B

RUN #2		RUN #2		
Volume of Liquid	400 mls (adj.)	Volume of Liquid	77.8 + wash = @250 mls.	
Color	Clear. no ppt.	Color	opac.	
Final Weight	103.1495	Final Weight	103.7130	
Tare Weight	103.1411	Tare Weight	103.7114	2-T
Residue & Blank	0.0084	Residue & Blank	0.0016	
- Blank	0.0001	- Blank	0	
Residue	0.0083 = 8.3mg.	Residue	0.0016 = 1.6mg.	

1-A

RUN #3		RUN #3		
Volume of Liquid	400 mls (adj.)	Volume of Liquid	72.4 + wash = @250 mls.	
Color	Clear - no visible part.	Color	opac.	
Final Weight	114.0891	Final Weight	99.1361	
Tare Weight	114.0828	Tare Weight	99.1350	2-I
Residue & Blank	0.0063	Residue & Blank	0.0011	
- Blank	0.0001	- Blank	0	
Residue	0.0062 = 6.2mg	Residue	0.0011 = 1.1mg.	

1-B

AMERICAN ENVIRONMENTAL TESTING, INCORPORATED
565 So. Birch Drive 801-266-7111
Spanish Fork, Utah 84660

PARTICULATE FIELD DATA FORMAT

1	Plant	Chemstar Lime Plant
2	City	Bancroft, Idaho
3	Location	Belt DC - 123
4	Operator	J.D. Schiller
5	Date	2/12/93
6	Method and Run	EPA 5 - #1 Compliance
7	Stack Diameter (in)	28
8	Sample Box Number	CR 1A
9	Meter Box Number	CR (097)
10	Meter "H@	2.116
11	Meter Calibration, Y	1.142
12	Pitot Tube, Cp	0.8413
13	Probe Length (ft)	6' - A
14	Probe Liner Material	Stainless Steel
15	Probe Heater Setting (°F)	Ambient
16	Ambient Temperature (°F)	30
17	Barometeric Press., Pb (in Hg)	23.4
18	Assumed Moisture (%)	2
19	Static Pressure, Ps (in H20)	-0.18
20	C Factor	0
21	Reference "P (in H20)	1.1325
22	Nozzle Identification Number	3/16-#9
23	Nozzle Diameter (in)	0.188
24	Thermometer Number	1-A
25	Pretest Leak Rate (CFM)	0.0050
26	Leak Check Vacuum (in H20)	20.4
27	Filter Number	CL - #1
28	Gas Analysis	
29	CO (%)	0
30	CO2 (%)	0.20
31	O2 (%)	20.90
	N2 (%)	78.90

849.8000	
1.0000	
28.8680	
28.8680	
0.7906	
1.1325	
0.8954	

Stack Temp Ts (°F)	Gas Volume Vm (ft3)	Gas Volume difference (ft3)
	3608.45	
34	3611.49	3.04
35	3614.76	3.27
35	3617.99	3.23
36	3621.14	3.15
39	3624.79	3.65
39	3628.28	3.49
38	3631.57	3.29
39	3634.72	3.15
39	3637.7	2.98
40	3640.57	2.87
39	3643.35	2.78
40	3646.122	2.77
40	3649.16	3.04
39	3652.46	3.30
39	3655.86	3.40
39	3659.01	3.15
39	3662.68	3.67
40	3666.18	3.50
40	3669.48	3.30
39	3672.64	3.16
40	3675.52	2.88
39	3678.4	2.88
39	3681.18	2.78
39	3683.996	2.82

8.54
8.54

	75.5460	75.55
3.54		
ack	Gas	Gas
p (°F)	Volume	Volume
T	Vm	Vm

Velocity Head ^Ps (in H20)	Pressure Diff ^H (in H20)	Sqrt ^Ps	Sampling Time (min)	Clock Time (24 hrs)	Vacuum (in Hg)
				1005	
1.03	1.68	1.0149	5	1010	2.8
1.15	1.88	1.0724	5	1015	2.8
1.21	1.98	1.1000	5	1020	2.9
1.06	1.73	1.0296	5	1025	2.8
1.41	2.30	1.1874	5	1030	3.1
1.3	2.12	1.1402	5	1035	2.9
1.15	1.88	1.0724	5	1040	3.1
0.99	1.62	0.9950	5	1045	2.8
0.92	1.50	0.9592	5	1050	2.7
0.85	1.38	0.9220	5	1055	2.8
0.79	1.29	0.8888	5	1100	2.2
0.78	1.27	0.8832	5	1105	2.2
1.02	1.66	1.0100	5	1120	2.5
1.17	1.91	1.0817	5	1125	2.6
1.22	1.99	1.1045	5	1130	2.8
1.08	1.76	1.0392	5	1135	2.5
1.5	2.45	1.2247	5	1140	2.5
1.28	2.08	1.1314	5	1135	2.5
1.16	1.89	1.0770	5	1140	2.4
1	1.63	1.0000	5	1145	2.2
0.85	1.38	0.9220	5	1215	2.2
0.85	1.39	0.9220	5	1220	2.3
0.8	1.31	0.8944	5	1225	2.2
0.82	1.34	0.9055	5	1230	2.2

			120	120	
1.0579	1.7261	1.0241	5	1103.75	2.58
Velocity Head ^Ps	Pressure Diff ^H	Sqrt ^Ps	Sampling Time	Clock Time	Vacuum

POST TEST CALCULATION

VOLUME DRY GAS
Vm(std) = 66.9516

VOLUME H2O VAPOR
Vw(std) = 0.4095

MOISTURE CONTENT
Bws = 0.0061

Vm 75.5460
Vm(std) = 66.9516

Vic(mls) 8.7
Vw(std) = 0.4095

MOL WT DRY STACK GASES
Mds = 28.8680

STACK VELOCITY
Vs = 63.3643

Kp 85.49
Vs = 63.3643

DRY STACK FLOW RATE
Q(std) = 8.0257E+05

MOL WT WET STACK GASES
Mws = 28.8019

ISOKINETIC CALCULATION
An = 1.9277E-04
% ISO = 93.5661

PARTICULATE CONCENTRATION
Cs = 1.0754E-04

Mn 7.2
Cs = 1.0754E-04
lbs/dscf = 2.3708E-07
grains/dscf = 0.0017
lbs/hr = 0.1903

Initial Leak Check Rate
Finish 3608.16
Start 3608.155
Rate = 0.0050

Pitot Tubes
A = OK
B = OK

Vac. = 20.4

Final Leak Check Rate
Finish 3684.134
Start 3684.133
Rate = 0.0010

Pitot Tubes
A = OK
B = OK

Vac. = 20.1

American Environmental Testing Company, Inc.
565 South Birch Drive
Spanish Fork, Utah 84660
(801) 266-7111

LABORATORY DATA
EPA Method 5

Company: Chemston Tony - Idaho Run Number: Run #1 CR Box

Sampling Location: DC-123 Date: 2-12-93

Moisture Collected

	Initial Weight	Final Weight	Weight Gain
Impinger 1	522.3	535.5	13.2
Impinger 2	555.8	539.4	-16.4
Impinger 3	458.5	458.8	0.3
Impinger 4	657.7	669.3	11.6

Total Gain = 8.7g total

Particulate Collected

Front - Half Analysis (Nozzle, Probe, Filter and Oven Glassware)

1. Filter Final Weight 0.7480
2. Filter Tare Weight 0.7426 CL-#1
3. Total Filter Weight 0.0054 = 5.4 mg
4. Particulate caught in nozzle, probe and glassware 0.0018 = 1.8 mg
5. Total Front - Half Catch 0.0072 = 7.2 mg = 7.2 mg Total

Back - Half Analysis (Impingers, and Connecting Glassware)

1. Particulate caught in impingers evaporated down at less than 120° F. 0.7 mg

Total Particulate Catch (Sum of Front and Back - Half Catches)

7.9 mg

AMERICAN ENVIRONMENTAL TESTING, INCORPORATED
565 So. Birch Drive 801-266-7111
Spanish Fork, Utah 84660

PARTICULATE FIELD DATA FORMAT

1	Plant	Chemstar Lime Plant
2	City	Bancroft, Idaho
3	Location	Belt DC - 123
4	Operator	J.D. Schiller
5	Date	2/12/93
6	Method and Run	EPA 5 - #2 Compliance
7	Stack Diameter (in)	28
8	Sample Box Number	CR 1 A
9	Meter Box Number	CR (097)
10	Meter ^H@	2.116
11	Meter Calibration, Y	1.142
12	Pitot Tube, Cp	0.8413
13	Probe Length (ft)	6' - AB
14	Probe Liner Material	Stainless Steel
15	Probe Heater Setting (°F)	Ambient
16	Ambient Temperature (°F)	37
17	Barometeric Press., Pb (in Hg)	23.39
18	Assumed Moisture (%)	2
19	Static Pressure, Ps (in H20)	-0.18
20	C Factor	0
21	Reference ^P (in H20)	1.1325
22	Nozzle Identification Number	3/16-#9
23	Nozzle Diameter (in)	0.188
24	Thermometer Number	1-A
25	Pretest Leak Rate (CFM)	0.0030
26	Leak Check Vacuum (in H20)	20.9
27	Filter Number	CL-#2
28	Gas Analysis	
29	CO (%)	0
30	CO2 (%)	0.20
31	O2 (%)	20.90
	N2 (%)	78.90

PRETEST CALCULATIONS

NOZZLE DIAMETER

Dn = 0.188

constant	0.0357
Qm	0.75
Pb(in HG)	23.39
Pgm(in H20)	-0.18
Pm	23.3768
Cp	0.8413
Tm(°F)	75
Tm(°R)	535
Bwm	0
Bws	0.02
Ts(°F)	32
Ts(°R)	492
Mds	28.868
Ms	28.6506
Pb(in HG)	23.39
Pgs(in.H20)	-0.18
Ps	23.3769
(^P)avg	1.1325

Dn = 0.1792

PRETEST DATA

Cp	0.8413
Imp V(H20)(ml)	67.5000
Gel H20(g)	12.0000
V(H20)(ml)	127.8000
Vm(acf)	49.2300
^h avg	0.2000
Vwc	6.0155
Vmc	43.3854

Bws = 0.1218

ISOKINETIC ^H

^H = 0.8954

constant	849.8000
^H@	1.0000
Mds	28.8680
Mm	28.8680
K	0.7906
^P	1.1325

^H = 0.8954

Sample Point	Meter Temperature Outlet (°F)	Meter Temperature Inlet (°F)	Stack Temp Ts (°F)	Gas Volume Vm (ft3)	Gas Volume difference (ft3)
starting				3684.458	
1	68	70	39	3687.23	2.77
2	68	69	36	3690.36	3.13
3	69	70	37	3693.43	3.07
4	68	68	39	3697.33	3.90
5	68	69	40	3701.09	3.76
6	68	68	40	3705.07	3.98
7	69	68	39	3708.35	3.28
8	68	68	39	3711.61	3.26
9	67	66	40	3714.63	3.02
10	67	66	39	3717.5	2.87
11	66	66	40	3720.28	2.78
12	66	66	40	3723.055	2.78
13	67	66	39	3726.62	3.56
14	67	66	39	3730.27	3.65
15	67	67	39	3733.99	3.72
16	66	66	39	3737.91	3.92
17	66	66	33	3741.72	3.81
18	66	66	33	3745.71	3.99
19	66	66	34	3749.19	3.48
20	66	65	33	3752.32	3.13
21	65	65	32	3755.33	3.01
22	65	65	31	3758.17	2.84
23	65	64	32	3760.96	2.79
24	65	64	31	3763.716	2.76

avg °F		66.73	36.79		
avg °R		526.73	496.79		
total =				79.2580	79.26
average =	66.79	66.67	36.79		
Sample Point	Meter Temperature Inlet (°F)	Meter Temperature Outlet (°F)	Stack Temp (°F) T	Gas Volume Vm	Gas Volume Vm

Velocity Head ^Ps (in H20)	Pressure Diff ^H (in H20)	Sqrt ^Ps	Sampling Time (min)	Clock Time (24 hrs)	Vacuum (in Hg)
				1305	
0.94	1.53	0.9695	5	1310	4.5
1.01	1.65	1.0050	5	1315	4.3
1.11	1.82	1.0536	5	1320	4.2
1.53	2.49	1.2369	5	1325	4.9
1.41	2.29	1.1874	5	1330	4.9
1.55	2.52	1.2450	5	1335	5
1.1	1.79	1.0488	5	1340	4.9
1.1	1.79	1.0488	5	1345	4.9
0.92	1.49	0.9592	5	1350	4.3
0.86	1.40	0.9274	5	1355	4.1
0.83	1.34	0.9110	5	1400	4.2
0.84	1.36	0.9165	5	1405	4.2
1.3	2.11	1.1402	5	1415	5.3
1.35	2.19	1.1619	5	1420	5.3
1.41	2.29	1.1874	5	1425	5.4
1.55	2.51	1.2450	5	1430	5.6
1.5	2.46	1.2247	5	1435	5.5
1.58	2.59	1.2570	5	1440	5.6
1.2	1.96	1.0954	5	1445	5
0.98	1.61	0.9899	5	1450	4.5
0.9	1.48	0.9487	5	1455	4.3
0.84	1.38	0.9165	5	1500	4.2
0.82	1.34	0.9055	5	1505	4.2
0.8	1.31	0.8944	5	1510	4.1
			120	120	
1.1429	1.8630	1.0615	5	1398.33	4.72
Velocity Head ^Ps	Pressure Diff ^H	Sqrt ^Ps	Sampling Time	Clock Time	Vacuum

Probe Temperature Exit (°F)	Filter Temperature (°F)	Impinger Temperature Outlet (°F)	Vs	Point to Point Isokinetics
40	39	37	60.0400	87.05
40	40	38	62.0481	94.67
40	40	38	65.1128	88.54
39	40	38	76.5989	96.47
40	39	37	73.6074	96.83
40	39	36	77.1752	97.92
40	40	36	64.9491	95.39
39	40	36	64.9491	94.90
40	39	36	59.4574	96.40
39	38	35	57.4283	94.64
38	38	34	56.4743	93.48
38	38	33	56.8135	92.76
37	38	34	70.6072	95.82
34	35	33	71.9522	96.30
33	33	32	73.5337	95.97
32	33	30	77.0980	96.71
32	32	29	75.3869	94.96
30	33	28	77.3711	96.93
31	32	30	67.4964	96.92
32	31	31	60.9345	96.34
32	32	31	58.3352	96.64
31	31	29	56.2998	94.25
30	31	30	55.6822	93.89
30	31	30	54.9430	93.79

35.71	35.92	33.38
Probe Exit Temperature (°F)	Filter Temperature (°F)	Outlet Impinger Temperature (°F)

POST TEST CALCULATION

VOLUME DRY GAS

Vm(std) = 70.2415

VOLUME H2O VAPOR

Vw(std) = 0.4848

MOISTURE CONTENT

Bws = 0.0069

Vm 79.2580

Vm(std) = 70.2415

Vic(mls) 10.3

Vw(std) = 0.4848

MOL WT DRY STACK GASES

Mds = 28.8680

STACK VELOCITY

Vs = 65.5893

Kp 85.49

Vs = 65.5893

DRY STACK FLOW RATE

Q(std) = 8.3267E+05

MOL WT WET STACK GASES

Mws = 28.7935

ISOKINETIC CALCULATION

An = 1.9277E-04

% ISO = 95.0195

PARTICULATE CONCENTRATION

Cs = 9.1114E-05

Mn 6.4

Cs = 9.1114E-05

lbs/dscf = 2.0087E-07

grains/dscf = 0.0014

lbs/hr = 0.1673

Initial Leak Check Rate

Finish	3684.328	Pitot Tubes
Start	3684.325	A = OK
Rate = 0.0030		B = OK

Vac. = 20.9

Final Leak Check Rate

		Pitot Tubes
Finish	3763.955	A = OK
Start	3763.952	B = OK
Rate = 0.0030		

Vac. = 19.3

American Environmental Testing Company, Inc.
565 South Birch Drive
Spanish Fork, Utah 84660
(801) 266-7111

LABORATORY DATA
EPA Method 5

Company: Chemstar Inc. Run Number: Run # 2 CRBox

Sampling Location: AC-123 Date: 2-12-93

Moisture Collected

	Initial Weight	Final Weight	Weight Gain
Impinger 1	535.6	549.6	14.0
Impinger 2	539.4	526.6	-12.8
Impinger 3	458.8	459.6	.8
Impinger 4	669.3	677.6	8.3

Total Gain = 10.3

Particulate Collected

Front - Half Analysis (Nozzle, Probe, Filter and Oven Glassware)

1. Filter Final Weight 0.7581
2. Filter Tare Weight 0.7538 CL-#2
3. Total Filter Weight 0.0043 = 4.3mg
4. Particulate caught in nozzle, probe and glassware 0.0021 = 2.1mg
5. Total Front - Half Catch 0.0064 = 6.4mg = 6.4mg

Back - Half Analysis (Impingers, and Connecting Glassware)

1. Particulate caught in impingers evaporated down at less than 120° F. 1.1mg

Total Particulate Catch (Sum of Front and Back - Half Catches)

7.5mg

AMERICAN ENVIRONMENTAL TESTING, INCORPORATED
565 So. Birch Drive 801-266-7111
Spanish Fork, Utah 84660

PARTICULATE FIELD DATA FORMAT

1	Plant	Chemstar Lime Plant
2	City	Bancroft, Idaho
3	Location	Belt DC - 123
4	Operator	J.D. Schiller
5	Date	2/12/93
6	Method and Run	EPA 5 - #3 Compliance
7	Stack Diameter (in)	28
8	Sample Box Number	CR 1A
9	Meter Box Number	CR (097)
10	Meter ^H@	2.116
11	Meter Calibration, Y	1.142
12	Pitot Tube, Cp	0.8413
13	Probe Length (ft)	6' - A
14	Probe Liner Material	Stainless Steel
15	Probe Heater Setting (°F)	Ambient
16	Ambient Temperature (°F)	37
17	Barometeric Press., Pb (in Hg)	23.39
18	Assumed Moisture (%)	2
19	Static Pressure, Ps (in H20)	-0.18
20	C Factor	0
21	Reference ^P (in H20)	1.1325
22	Nozzle Identification Number	3/16-#9
23	Nozzle Diameter (in)	0.188
24	Thermometer Number	1-A
25	Pretest Leak Rate (CFM)	0.0030
26	Leak Check Vacuum (in H20)	20.9
27	Filter Number	CL-#3
28	Gas Analysis	
29	CO (%)	0
30	CO2 (%)	0.20
31	O2 (%)	20.90
	N2 (%)	78.90

PRETEST CALCULATIONS

NOZZLE DIAMETER

Dn = 0.188

constant	0.0357
Qm	0.75
Pb(in HG)	23.39
Pgm(in H2O)	-0.18
Pm	23.3768
Cp	0.8413
Tm(°F)	75
Tm(°R)	535
Bwm	0
Bws	0.02
Ts(°F)	32
Ts(°R)	492
Mds	28.868
Ms	28.6506
Pb(in HG)	23.39
Pgs(in H2O)	-0.18
Ps	23.3768
(^P)avg	1.1325

Dn = 0.1792

PRETEST DATA

Cp	0.8413
Imp V(H2O)(ml)	67.5000
Gel H2O(g)	12.0000
V(H2O)(ml)	127.8000
Vm(acf)	49.2300
^h avg	0.2000
Vwc	6.0155
Vmc	43.3854

Bws = 0.1218

ISOKINETIC ^H

^H = 0.8954

constant	849.8000
^H@	1.0000
Mds	28.8680
Mm	28.8680
K	0.7906
^P	1.1325

^H = 0.8954

Sample Point	Meter Temperature Outlet (°F)	Meter Temperature Inlet (°F)	Stack Temp Ts (°F)	Gas Volume Vm (ft3)	Gas Volume difference (ft3)
starting				3764.358	
1	61	60	36	3767.52	3.16
2	61	60	37	3770.73	3.21
3	60	61	37	3774.02	3.29
4	61	60	36	3777.21	3.19
5	61	60	37	3780.81	3.60
6	61	59	37	3784.32	3.51
7	60	59	37	3787.59	3.27
8	61	58	36	3790.58	2.99
9	60	59	36	3793.45	2.87
10	61	58	36	3796.24	2.79
11	60	58	35	3799.01	2.77
12	60	58	35	3801.78	3.16
13	60	58	36	3804.76	2.98
14	60	58	35	3807.9	3.14
15	61	59	36	3811.16	3.26
16	60	59	36	3814.13	2.97
17	60	58	37	3817.78	3.65
18	60	59	36	3821.3	3.52
19	59	59	37	3824.59	3.29
20	59	58	36	3827.63	3.04
21	57	56	36	3830.55	2.92
22	57	55	36	3833.43	2.88
23	56	55	36	3836.29	2.86
24	57	55	36	3839.11	2.82

avg °F		59.00	36.17		
avg °R		519.00	496.17		
total =				74.7520	75.14
average =	59.71	58.29	36.17		
Sample Point	Meter Temperature Inlet (°F)	Meter Temperature Outlet (°F)	Stack Temp (°F) T	Gas Volume Vm	Gas Volume Vm

Velocity Head ^Ps (in H20)	Pressure Diff ^H (in H20)	Sqrt ^Ps	Sampling Time (min)	Clock Time (24 hrs)	Vacuum (in Hg)
				1650	
1.05	1.69	1.0247	5	1655	3.8
1.1	1.77	1.0488	5	1700	3.9
1.24	2.00	1.1136	5	1705	4
1.11	1.79	1.0536	5	1710	3.8
1.36	2.19	1.1662	5	1715	4.2
1.29	2.08	1.1358	5	1720	4.1
1.19	1.91	1.0909	5	1725	4
1.05	1.69	1.0247	5	1730	3.8
0.93	1.50	0.9644	5	1735	3.5
0.85	1.37	0.9220	5	1740	3.4
0.8	1.29	0.8944	5	1745	3.4
0.78	1.26	0.8832	5	1750	3.3
1	1.61	1.0000	5	1805	3.7
1.15	1.85	1.0724	5	1810	4.3
1.21	1.95	1.1000	5	1815	4.3
1.04	1.67	1.0198	5	1820	4
1.49	2.39	1.2207	5	1825	4.6
1.29	2.08	1.1358	5	1830	4.2
1.15	1.85	1.0724	5	1835	3.8
1.02	1.64	1.0100	5	1840	3.5
0.88	1.41	0.9381	5	1845	3.4
0.85	1.36	0.9220	5	1850	3.3
0.87	1.39	0.9327	5	1855	3.3
0.83	1.33	0.9110	5	1900	3.5
			120	120	
1.0638	1.7112	1.0274	5	1777.50	3.82
Velocity Head ^Ps	Pressure Diff ^H	Sqrt ^Ps	Sampling Time	Clock Time	Vacuum

Probe Temperature Exit (°F)	Filter Temperature (°F)	Impinger Temperature Outlet (°F)	Vs	Point to Point Isokinetics
40	42	45	63.2672	95.25
40	42	45	64.8213	94.59
41	40	44	68.8228	91.38
42	40	40	65.0498	93.49
42	40	41	72.0761	95.53
39	39	41	70.1967	95.69
38	36	43	67.4210	92.86
38	38	41	63.2672	90.24
37	38	41	59.5423	91.98
37	35	40	56.9238	93.50
36	36	39	55.1685	95.65
35	36	39	54.4745	96.96
37	39	37	61.7425	92.23
38	37	37	66.1447	90.60
39	40	36	67.9168	91.64
37	39	36	62.9653	90.06
36	37	35	75.4423	92.86
35	35	37	70.1260	95.96
36	36	37	66.2782	95.11
36	36	38	62.3569	93.25
38	37	34	57.9196	96.74
39	35	35	56.9238	97.16
37	36	36	57.5896	95.47
37	38	36	56.2501	96.27

37.92	37.79	38.88
Probe Exit Temperature (°F)	Filter Temperature (°F)	Outlet Impinger Temperature (°F)

POST TEST CALCULATION

VOLUME DRY GAS
Vm(std) = 66.2167

VOLUME H2O VAPOR
Vw(std) = 0.4707

MOISTURE CONTENT
Bws = 0.0071

Vm 74.7520
Vm(std) = 66.2167

Vic(mls) 10
Vw(std) = 0.4707

MOL WT DRY STACK GASES
Mds = 28.8680

STACK VELOCITY
Vs = 63.4430

DRY STACK FLOW RATE
Q(std) = 8.0627E+05

Kp 85.49
Vs = 63.4430

MOL WT WET STACK GASES
Mws = 28.7913

ISOKINETIC CALCULATION
An = 1.9277E-04

% ISO = 93.8755

PARTICULATE CONCENTRATION
Cs = 1.1780E-04

Mn 7.8
Cs = 1.1780E-04
lbs/dscf = 2.5969E-07
grains/dscf = 0.0018
lbs/hr = 0.2094

Initial Leak Check Rate

Finish	3684.328	Pitot Tubes
Start	3684.325	A = OK
Rate = 0.0030		B = OK

Vac. = 20.9

Final Leak Check Rate

		Pitot Tubes
Finish	3839.334	A = OK
Start	3839.331	B = OK
Rate = 0.0030		

Vac. = 19.5

American Environmental Testing Company, Inc.
565 South Birch Drive
Spanish Fork, Utah 84660
(801) 266-7111

LABORATORY DATA
EPA Method 5

Company: Chemstar Firm Run Number: #3 1A Bof

Sampling Location: DC-123 Date: 2-12-93

Moisture Collected

	Initial Weight	Final Weight	Weight Gain
Impinger 1	503.2	536.7	13.5
Impinger 2	555.2	542.1	-13.1
Impinger 3	458.9	459.4	0.5
Impinger 4	679.2	688.3	9.1

Total Gain = 10.0 g Total

Particulate Collected

Front - Half Analysis (Nozzle, Probe, Filter and Oven Glassware)

1. Filter Final Weight 0.7636
2. Filter Tare Weight 0.7576 CL #3
3. Total Filter Weight 0.0060 = 6.0 mg
4. Particulate caught in nozzle, probe and glassware 0.0018 = 1.8 mg
5. Total Front - Half Catch 0.0078 = 7.8 mg = 7.8 mg Total

Back - Half Analysis (Impingers, and Connecting Glassware)

1. Particulate caught in impingers evaporated down at less than 120° F. 0.6 mg

Total Particulate Catch (Sum of Front and Back - Half Catches)

8.4 mg

American Environmental
Testing Company, Inc.
565 South Birch Drive
Spanish Fork, Utah 84660
801-266-7111

CHEMSTAR Lime.
2/12-93 Tennile Plant.
Bancroft, Idaho.

ORSAT ANALYSIS

(Ave. of 3 Analyses Each)

CR-Box.

TEST NO.	DESCRIPTION	VOLUME PERCENT - DRY			
		NITROGEN	OXYGEN	CARBON DIOXIDE	CARBON MONOXIDE
#1	EPA Method	78.9	20.9	0.2	<0.1
5	Compliance.	78.9	20.9	0.2	<0.1
		78.9	20.9	0.2	<0.1
	AVERAGE	78.9	20.9	0.2	<0.1

AMERICAN ENVIRONMENTAL TESTING, INCORPORATED

565 So. Birch Drive 801-266-7111

Spanish Fork, Utah 84660

POST TEST EVAPORATION

COMPANY: Clemstar Farms

SOURCE: DC-123

DATE: 2-12-93

ACETONE BLANK

Volume of Liquid: 150 mils

Final Weight: 96.1319

Tare Weight: 96.1317

Residue: 0.0002

WATER BLANK

Volume of Liquid: 250 mils

Final Weight: 102.6914

Tare Weight: 102.6911

Residue: 0.0003

RUN #1

Volume of Liquid: 150 mils (adj)

Color: Clear

Final Weight: 100.1333

V-1 Tare Weight: 100.1313

Residue & Blank: 0.0020

- Blank: 0.0002

Residue: 0.0018 = 1.8 mg

RUN #1

Volume of Liquid: 250 mils (adj)

Color: Clear

Final Weight: 103.6142

F-3 Tare Weight: 103.6132

Residue & Blank: 0.0010

- Blank: 0.0003

Residue: 0.0007 = 0.7 mg

RUN #2

Volume of Liquid: 150 mils (adj)

Color: Clear

Final Weight: 101.4019

V-4 Tare Weight: 101.3996

Residue & Blank: 0.0023

- Blank: 0.0002

Residue: 0.0021 = 2.1 mg

RUN #2

Volume of Liquid: 250 mils (adj)

Color: Clear

Final Weight: 102.6169

F-5 Tare Weight: 102.6155

Residue & Blank: 0.0014

- Blank: 0.0003

Residue: 0.0011 = 1.1 mg

RUN #3

Volume of Liquid: 150 mils (adj)

Color: Clear

Final Weight: 99.6214

V-3 Tare Weight: 99.6194

Residue & Blank: 0.0020

- Blank: 0.0002

Residue: 0.0018 = 1.8 mg

RUN #3

Volume of Liquid: 250 mils

Color: Clear

Final Weight: 101.1398

F-8 Tare Weight: 101.1389

Residue & Blank: 0.0009

- Blank: 0.0003

Residue: 0.0006 = 0.6 mg

AMERICAN ENVIRONMENTAL TESTING, INCORPORATED
565 So. Birch Drive 801-266-7111
Spanish Fork, Utah 84660

PARTICULATE FIELD DATA FORMAT

1	Plant	Chemstar Lime
2	City	Bannecroft, Idaho
3	Location	DC-126 Belt
4	Operator	Brett Lindsay
5	Date	2/13/93
6	EPA Method and Run #	EPA - 5 #1
7	Stack Diameter (in)	12
8	Sample Box Number	RAC #1A
9	Meter Box Number	RAC 1
10	Meter ^H@	1.815
11	Meter Calibration, Y	1.002
12	Pitot Tube, Cp	0.8396
13	Probe Length (ft)	4' - C
14	Probe Liner Material	Teflon
15	Probe Heater Setting (°F)	Ambient
16	Ambient Temperature (°F)	38
17	Barometeric Press., Pb (in Hg)	23.48
18	Assumed Moisture (%)	2
19	Static Pressure, Ps (in H2O)	-0.11
20	C Factor	0
21	Reference ^P (in H2O)	0.82
22	Nozzle Identification Number	3/16 - 2
23	Nozzle Diameter (in)	0.191
24	Thermometer Number	1-A
25	Pretest Leak Rate (CFM)	300.00
26	Leak Check Vacuum (in H2O)	19.8
27	Filter Number	RL - 4
28	Gas Analysis	
29	CO (%)	0
30	CO2 (%)	0.2
31	O2 (%)	20.9
32	N2 (%)	78.9
	Stack Square Feet	0.785

Velocity Head ^Ps (in H20)	Pressure Diff ^H (in H20)	Sqrt ^Ps	Sampling Time (min)	Clock Time (24 hrs)	Vacuum (in Hg)
				940	
0.47	0.68	0.6856	5	945	2
0.53	0.77	0.7280	5	950	2
0.59	0.86	0.7681	5	955	2.3
0.68	1.00	0.8246	5	1000	2.7
0.81	1.19	0.9000	5	1005	2.8
0.83	1.23	0.9110	5	1010	3
0.88	1.31	0.9381	5	1015	3.1
0.96	1.44	0.9798	5	1020	3.3
1.1	1.65	1.0488	5	1025	3.6
1.12	1.69	1.0583	5	1030	3.8
1.19	1.80	1.0909	5	1035	4.1
1.08	1.66	1.0392	5	1040	3.7
0.66	0.98	0.8124	5	1050	2.8
0.68	1.01	0.8246	5	1055	2.8
0.68	1.02	0.8246	5	1100	2.9
0.73	1.11	0.8544	5	1105	2.9
0.82	1.25	0.9055	5	1110	3.2
0.94	1.44	0.9695	5	1115	3.4
0.99	1.52	0.9950	5	1120	3.6
1.11	1.71	1.0536	5	1125	3.9
1.15	1.78	1.0724	5	1130	4
1.2	1.86	1.0954	5	1135	4.3
1.17	1.81	1.0817	5	1140	4.2
1.1	1.71	1.0488	5	1145	3.9

			120	120	
0.8946	1.3531	0.9379	5	1056.67	3.26
Velocity Head ^Ps	Pressure Diff ^H	Sqrt ^Ps	Sampling Time	Clock Time	Vacuum

Probe Temperature Exit (°F)	Filter Temperature (°F)	Impinger Temperature Outlet (°F)	Vs	**Point to Point Isokinetics**
42	40	37	42.3264	101.28
41	41	39	44.9919	102.68
40	40	41	47.4704	101.28
41	39	41	50.9117	99.66
40	38	40	55.5099	98.10
37	38	42	56.1347	99.32
39	39	40	57.8008	97.95
38	37	38	60.4315	102.76
39	39	39	64.8176	100.92
39	37	38	65.4042	101.35
40	39	38	67.3498	100.00
38	40	36	64.0973	99.82
37	41	37	50.0570	99.36
39	42	39	50.7587	98.78
38	40	38	50.8097	98.05
36	38	36	52.6446	99.17
37	37	37	55.8515	97.29
39	39	38	59.7987	99.15
40	37	40	61.4914	100.59
41	38	41	65.0466	100.02
41	39	41	66.2744	99.10
40	41	39	67.6998	97.55
41	41	38	66.9149	98.24
40	40	37	64.9469	100.18

39.29	39.17	38.75
Probe Exit Temperature (°F)	Filter Temperature (°F)	Outlet Impinger Temperature (°F)

POST TEST CALCULATION

VOLUME DRY GAS
Vm(std) = 65.4746

VOLUME H2O VAPOR
Vw(std) = 0.4613

MOISTURE CONTENT
Bws = 0.0070

Vm 87.9400
Vm(std) = 65.4746

Vic(mls) 9.8
Vw(std) = 0.4613

MOL WT DRY STACK GASES
Mds = 28.8680

STACK VELOCITY
Vs = 57.8931

DRY STACK FLOW RATE
Q(std) = 1.3472E+05

Kp 85.49
Vs = 57.8931

MOL WT WET STACK GASES
Mws = 28.7920

ISOKINETIC CALCULATION
An = 1.9897E-04
% ISO = 99.8557

PARTICULATE CONCENTRATION
Cs = 6.4147E-05

Mn 4.2
Cs = 6.4147E-05
lbs/dscf = 1.4142E-07
grains/dscf = 0.0010
lbs/hr = 0.0191

Initial Leak Check Rate
Finish 943.961
Start 643.958
Rate = 300.0030

Pitot Tubes
A = OK
B = OK

Vac. = 19.8

Final Leak Check Rate
Finish 732.246
Start 732.242
Rate = 0.0040

Pitot Tubes
A = OK
B = OK

Vac. = 20.3

American Environmental Testing Company, Inc.
565 South Birch Drive
Spanish Fork, Utah 84660
(801) 266-7111

LABORATORY DATA
EPA Method 5

Company: Chemstar Zinc Run Number: #1 BAC

Sampling Location: BAC DC-126 Date: 2/13/93

Moisture Collected

	Initial Weight	Final Weight	Weight Gain
Impinger 1	572.3	570.0	-2.3
Impinger 2	584.5	586.3	1.8
Impinger 3	531.8	532.7	0.9
Impinger 4	646.7	656.1	9.4

Total Gain = 9.8 g Total

Particulate Collected

Front - Half Analysis (Nozzle, Probe, Filter and Oven Glassware)

1. Filter Final Weight 0.6265 g
2. Filter Tare Weight 0.6232 RL-4
3. Total Filter Weight 0.0033 g = 3.3 mg
4. Particulate caught in nozzle, probe and glassware 0.0009 = 0.9 mg
5. Total Front - Half Catch 0.0042 = 4.2 mg

4.2 mg Total

Back - Half Analysis (Impingers, and Connecting Glassware)

1. Particulate caught in impingers evaporated down at less than 120° F. 0.7 mg

Total Particulate Catch (Sum of Front and Back - Half Catches)

4.9 mg

AMERICAN ENVIRONMENTAL TESTING, INCORPORATED
565 So. Birch Drive 801-266-7111
Spanish Fork, Utah 84660

PARTICULATE FIELD DATA FORMAT

1	Plant	Chemstar Lime
2	City	Banncroft, Idaho
3	Location	DC-126 Belt
4	Operator	Brett Lindsay
5	Date	2/13/93
6	EPA Method and Run #	EPA - 5 #2
7	Stack Diameter (in)	12
8	Sample Box Number	RAC #1A
9	Meter Box Number	RAC 1
10	Meter "H@	1.815
11	Meter Calibration, Y	1.002
12	Pitot Tube, Cp	0.8396
13	Probe Length (ft)	4' - C
14	Probe Liner Material	Teflon
15	Probe Heater Setting (°F)	Ambient
16	Ambient Temperature (°F)	38
17	Barometeric Press., Pb (in Hg)	23.47
18	Assumed Moisture (%)	2
19	Static Pressure, Ps (in H2O)	-0.11
20	C Factor	0
21	Reference "P (in H2O)	0.82
22	Nozzle Identification Number	3/16 - 2
23	Nozzle Diameter (in)	0.191
24	Thermometer Number	1-A
25	Pretest Leak Rate (CFM)	0.00
26	Leak Check Vacuum (in H2O)	18.8
27	Filter Number	RL - 5
28	Gas Analysis	
29	CO (%)	0
30	CO2 (%)	0.2
31	O2 (%)	20.9
32	N2 (%)	78.9
33	Stack Square Feet	0.785

PRETEST CALCULATIONS

NOZZLE DIAMETER		PRETEST DATA		ISOKINETIC ^H	
Dn = 0.191				**^H** = 0.7100	
constant	0.0357	Cp	0.8396	**constant**	849.8000
Qm	0.75	Imp V(H2O)(ml)	67.5000	**^H@**	1.0000
Pb(in HG)	23.47	Gel H2O(g)	12.0000	Mds	28.8680
Pgm(in H2O)	-0.11	V(H2O)(ml)	127.8000	**Mm**	28.8680
Pm	23.4619	Vm(acf)	49.2300	**K**	0.8658
Cp	0.8396	^h avg	0.2000	**^P**	0.8200
Tm(°F)	100	Vwc	6.0155	**^H** = 0.7100	
Tm(°R)	560	Vmc	36.4916		
Bwm	0	**Bws** = 0.1415			
Bws	0.02				
Ts(°F)	39				
Ts(°R)	499				
Mds	28.868				
Ms	28.6506				
Pb(in HG)	23.47				
Pgs(in H2O)	-0.11				
Ps	23.4619				
(^P)avg	0.82				
Dn = 0.1909					

Sample Point	Meter Temperature Outlet (°F)	Meter Temperature Inlet (°F)	Stack Temp Ts (°F)	Gas Volume Vm (ft3)	Gas Volume difference (ft3)
starting				732.522	
1	62	62	41	735.28	2.76
2	64	62	41	738.11	2.83
3	65	62	42	741.07	2.96
4	69	63	42	744.2	3.13
5	72	64	43	747.58	3.38
6	78	64	42	750.98	3.40
7	85	65	41	754.57	3.59
8	89	67	41	758.48	3.91
9	95	67	40	762.54	4.06
10	98	68	41	766.73	4.19
11	102	68	42	771.01	4.28
12	104	68	42	775.229	4.22
13	82	65	41	778.34	3.11
14	85	67	42	781.47	3.13
15	89	69	42	784.64	3.17
16	92	69	42	787.91	3.27
17	94	70	43	791.32	3.41
18	99	71	42	795.01	3.69
19	103	71	41	799.04	4.03
20	106	72	41	803.16	4.12
21	107	73	42	807.39	4.23
22	110	75	41	811.71	4.32
23	112	76	42	815.98	4.27
24	115	76	43	820.074	4.09

avg °F		79.40	41.67		
avg °R		539.40	501.67		
total =				87.5520	87.55
average =	90.71	68.08	41.67		
Sample Point	Meter Temperature Inlet (°F)	Meter Temperature Outlet (°F)	Stack Temp (°F) T	Gas Volume Vm	Gas Volume Vm

Velocity Head ^Ps (in H20)	Pressure Diff ^H (in H20)	Sqrt ^Ps	Sampling Time (min)	Clock Time (24 hrs)	Vacuum (in Hg)
				1215	
0.51	0.74	0.7141	5	1220	2
0.55	0.80	0.7416	5	1225	2.1
0.6	0.88	0.7746	5	1230	2.3
0.66	0.97	0.8124	5	1235	2.4
0.8	1.18	0.8944	5	1240	2.7
0.81	1.20	0.9000	5	1245	2.6
0.88	1.32	0.9381	5	1250	2.9
0.95	1.43	0.9747	5	1255	3.3
1.05	1.59	1.0247	5	1300	3.5
1.1	1.67	1.0488	5	1305	3.8
1.15	1.75	1.0724	5	1310	4.3
1.12	1.71	1.0583	5	1315	4
0.65	0.97	0.8062	5	1325	2.5
0.67	1.00	0.8185	5	1330	2.5
0.68	1.02	0.8246	5	1335	2.5
0.71	1.07	0.8426	5	1340	2.5
0.78	1.18	0.8832	5	1345	2.8
0.93	1.41	0.9644	5	1350	3.2
1	1.53	1.0000	5	1355	3.5
1.06	1.63	1.0296	5	1400	3.7
1.11	1.70	1.0536	5	1405	3.9
1.18	1.82	1.0863	5	1410	4.4
1.15	1.78	1.0724	5	1415	4.3
1.07	1.65	1.0344	5	1420	3.9

			120	120	
0.8821	1.3326	0.9321	5	1315.00	3.15
Velocity Head ^Ps	Pressure Diff ^H	Sqrt ^Ps	Sampling Time	Clock Time	Vacuum

Probe Temperature Exit (°F)	Filter Temperature (°F)	Impinger Temperature Outlet (°F)	Vs	Point to Point Isokinetics
41	39	39	44.1392	101.54
41	40	38	45.8375	100.16
40	41	38	47.9235	100.33
41	40	36	50.2625	100.71
39	40	39	55.3923	98.57
38	38	38	55.6820	97.89
39	39	40	57.9803	98.37
38	37	41	60.2423	102.58
38	36	40	63.2704	100.70
37	38	42	64.8240	101.29
37	39	37	66.3470	100.95
39	38	38	65.4759	100.64
39	37	39	49.8306	99.35
40	36	35	50.6419	98.11
37	38	36	51.0184	98.09
36	40	38	52.1317	98.76
37	41	40	54.6955	98.12
39	41	41	59.6642	96.68
40	40	39	61.8073	101.39
41	37	37	63.6345	100.35
38	38	38	65.1829	100.62
39	36	39	67.1399	99.16
37	38	40	66.3470	99.10
37	39	37	64.0614	98.30

38.67	38.58	38.54
Probe Exit Temperature (°F)	Filter Temperature (°F)	Outlet Impinger Temperature (°F)

POST TEST CALCULATION

VOLUME DRY GAS
Vm(std) = 65.1539

VOLUME H2O VAPOR
Vw(std) = 0.4189

MOISTURE CONTENT
Bws = 0.0064

Vm 87.5520
Vm(std) = 65.1539

Vic(mls) 8.9
Vw(std) = 0.4189

MOL WT DRY STACK GASES
Mds = 28.8680

STACK VELOCITY
Vs = 57.6475

DRY STACK FLOW RATE
Q(std) = 1.3366E+05

Kp 85.49
Vs = 57.6475

MOL WT WET STACK GASES
Mws = 28.7986

ISOKINETIC CALCULATION
An = 1.9897E-04
% ISO = 99.8565

PARTICULATE CONCENTRATION
Cs = 9.2090E-05

Mn 6
Cs = 9.2090E-05
lbs/dscf = 2.0302E-07
grains/dscf = 0.0014
lbs/hr = 0.0271

Initial Leak Check Rate
Finish 732.333
Start 732.331
Rate = 0.0020

Pitot Tubes
A = OK
B = OK

Vac. = 18.8

Final Leak Check Rate
Finish 820.269
Start 820.265
Rate = 0.0040

Pitot Tubes
A = OK
B = OK

Vac. = 19.6

American Environmental Testing Company, Inc.
565 South Birch Drive
Spanish Fork, Utah 84660
(801) 266-7111

LABORATORYDATA
EPA Method 5

Company: Chemstar Lime Run Number: #2 RAC

Sampling Location: LAC DC-126 Date: 2/13/93

Moisture Collected

	Initial Weight	Final Weight	Weight Gain
Impinger 1	575.6	572.5	-3.1
Impinger 2	581.0	582.3	1.3
Impinger 3	530.1	531.2	1.1
Impinger 4	649.6	659.2	9.6

Total Gain = 8.9 Total

Particulate Collected

Front - Half Analysis (Nozzle, Probe, Filter and Oven Glassware)

1. Filter Final Weight 0.6264
2. Filter Tare Weight 0.6217 RL-5
3. Total Filter Weight 0.0047 = 4.7 mg
4. Particulate caught in nozzle, probe and glassware 0.0013 = 1.3 mg
5. Total Front - Half Catch 0.0060 = 6.0 mg 6.0 mg

Back - Half Analysis (Impingers, and Connecting Glassware)

1. Particulate caught in impingers evaporated down at less than 120° F. 0.9 mg

Total Particulate Catch (Sum of Front and Back - Half Catches)

6.9 mg

AMERICAN ENVIRONMENTAL TESTING, INCORPORATED
565 So. Birch Drive 801-266-7111
Spanish Fork, Utah 84660

PARTICULATE FIELD DATA FORMAT

1	Plant	Chemstar Lime
2	City	Banncroft, Idaho
3	Location	DC-126 Belt
4	Operator	Brett Lindsay
5	Date	2/13/93
6	EPA Method and Run #	EPA - 5 #3
7	Stack Diameter (in)	12
8	Sample Box Number	RAC #1 A
9	Meter Box Number	RAC 1
10	Meter ^H@	1.815
11	Meter Calibration, Y	1.002
12	Pitot Tube, Cp	0.8396
13	Probe Length (ft)	4' - C
14	Probe Liner Material	Teflon
15	Probe Heater Setting (°F)	Ambient
16	Ambient Temperature (°F)	41
17	Barometeric Press., Pb (in Hg)	23.46
18	Assumed Moisture (%)	2
19	Static Pressure, Ps (in H20)	-0.11
20	C Factor	0
21	Reference ^P (in H20)	0.82
22	Nozzle Identification Number	3/16 - 2
23	Nozzle Diameter (in)	0.191
24	Thermometer Number	1-A
25	Pretest Leak Rate (CFM)	0.00
26	Leak Check Vacuum (in H20)	19.7
27	Filter Number	RL - 6
28	Gas Analysis	
29	CO (%)	0
30	CO2 (%)	0.2
31	O2 (%)	20.9
32	N2 (%)	78.9
33	Stack Square Feet	0.785

PRETEST CALCULATIONS

NOZZLE DIAMETER

Dn = 0.191

constant	0.0357
Qm	0.75
Pb(in HG)	23.46
Pgm(in H20)	-0.11
Pm	23.4519
Cp	0.8396
Tm(°F)	100
Tm(°R)	560
Bwm	0
Bws	0.02
Ts(°F)	39
Ts(°R)	499
Mds	28.868
Ms	28.6506
Pb(in HG)	23.46
Pgs(in H20)	-0.11
Ps	23.4519
(^P)avg	0.82

Dn = 0.1908

PRETEST DATA

Cp	0.8396
Imp V(H20)(ml)	67.5000
Gel H20(g)	12.0000
V(H20)(ml)	127.8000
Vm(acf)	49.2300
^h avg	0.2000
Vwc	6.0155
Vmc	36.4761

Bws = 0.1416

ISOKINETIC ^H

^H = 0.7100

constant	849.8000
^H@	1.0000
Mds	28.8680
Mm	28.8680
K	0.8658
^P	0.8200

^H = 0.7100

Sample Point	Meter Temperature Outlet (°F)	Meter Temperature Inlet (°F)	Stack Temp Ts (°F)	Gas Volume Vm (ft3)	Gas Volume difference (ft3)
starting				820.487	
1	67	67	41	823.32	2.83
2	68	66	40	826.29	2.97
3	68	66	40	829.27	2.98
4	70	67	41	832.28	3.01
5	73	68	40	835.61	3.33
6	79	70	40	839	3.39
7	82	70	41	842.54	3.54
8	85	71	42	846.21	3.67
9	88	71	41	850.22	4.01
10	95	71	41	854.28	4.06
11	101	72	40	858.4	4.12
12	104	73	40	862.631	4.23
13	84	68	40	865.62	2.99
14	89	69	39	868.76	3.14
15	92	69	40	871.93	3.17
16	97	71	40	875.14	3.21
17	100	72	41	878.62	3.48
18	103	72	41	882.53	3.91
19	105	73	42	886.53	4.00
20	109	74	41	890.56	4.03
21	111	74	41	894.69	4.13
22	112	74	41	898.94	4.25
23	114	75	40	903.17	4.23
24	117	77	40	907.259	4.09

avg °F		81.52	40.54		
avg °R		541.52	500.54		
total =				86.7720	86.77
average =	92.21	70.83	40.54		
Sample Point	Meter Temperature Inlet (°F)	Meter Temperature Outlet (°F)	Stack Temp (°F) T	Gas Volume Vm	Gas Volume Vm

Sample Point	Meter Temperature Outlet (°F)	Meter Temperature Inlet (°F)	Stack Temp Ts (°F)	Gas Volume Vm (ft3)	Gas Volume difference (ft3)
starting				3608.45	
1	66	65	34	3611.49	3.04
2	66	66	35	3614.76	3.27
3	66	67	35	3617.99	3.23
4	67	67	36	3621.14	3.15
5	69	70	39	3624.79	3.65
6	70	69	39	3628.28	3.49
7	70	69	38	3631.57	3.29
8	71	70	39	3634.72	3.15
9	69	69	39	3637.7	2.98
10	69	69	40	3640.57	2.87
11	70	69	39	3643.35	2.78
12	70	70	40	3646.122	2.77
13	69	69	40	3649.16	3.04
14	70	69	39	3652.46	3.30
15	70	69	39	3655.86	3.40
16	70	69	39	3659.01	3.15
17	69	70	39	3662.68	3.67
18	69	70	40	3666.18	3.50
19	70	69	40	3669.48	3.30
20	69	70	39	3672.64	3.16
21	70	69	40	3675.52	2.88
22	70	69	39	3678.4	2.88
23	70	70	39	3681.18	2.78
24	70	70	39	3683.996	2.82

avg °F		69.00	38.54		
avg °R		529.00	498.54		
total =				75.5460	75.55
average =	69.13	68.88	38.54		
Sample Point	Meter Temperature Inlet (°F)	Meter Temperature Outlet (°F)	Stack Temp (°F) T	Gas Volume Vm	Gas Volume Vm

Velocity Head ^Ps (in H20)	Pressure Diff ^H (in H20)	Sqrt ^Ps	Sampling Time (min)	Clock Time (24 hrs)	Vacuum (in Hg)
				1515	
0.54	0.80	0.7348	5	1520	2
0.58	0.86	0.7616	5	1525	2.1
0.6	0.89	0.7746	5	1530	2.3
0.63	0.93	0.7937	5	1535	2.3
0.78	1.16	0.8832	5	1540	2.5
0.8	1.20	0.8944	5	1545	2.8
0.85	1.27	0.9220	5	1550	3
0.92	1.38	0.9592	5	1555	3.3
1	1.51	1.0000	5	1600	3.6
1.05	1.59	1.0247	5	1605	3.8
1.08	1.65	1.0392	5	1610	4
1.1	1.69	1.0488	5	1615	4.2
0.6	0.90	0.7746	5	1625	2.4
0.64	0.97	0.8000	5	1630	2.4
0.65	0.98	0.8062	5	1635	2.6
0.69	1.05	0.8307	5	1640	2.5
0.8	1.22	0.8944	5	1645	2.9
0.92	1.41	0.9592	5	1650	3.1
0.95	1.45	0.9747	5	1655	3.2
1.01	1.56	1.0050	5	1700	3.5
1.05	1.62	1.0247	5	1705	3.9
1.13	1.75	1.0630	5	1710	4.3
1.1	1.71	1.0488	5	1715	4.1
1.05	1.64	1.0247	5	1720	4

			120	120	
0.8550	1.2987	0.9184	5	1615.00	3.12
Velocity Head ^Ps	Pressure Diff ^H	Sqrt ^Ps	Sampling Time	Clock Time	Vacuum

Probe Temperature Exit (°F)	Filter Temperature (°F)	Impinger Temperature Outlet (°F)	Vs	**Point to Point Isokinetics**
40	38	40	45.4500	100.60
41	39	37	47.0563	101.68
40	41	38	47.8607	100.31
37	41	37	49.0916	98.72
36	40	37	54.5696	97.75
36	37	39	55.2648	97.55
39	36	40	57.0226	98.67
38	36	40	59.3833	98.09
39	38	38	61.8496	102.46
40	39	37	63.3770	100.61
41	37	36	64.2119	99.95
42	40	36	64.8037	101.35
39	41	38	47.8607	98.95
38	42	39	49.3809	100.01
37	41	40	49.8150	100.01
38	40	37	51.3249	97.69
39	38	37	55.3200	98.15
40	39	39	59.3241	102.61
42	37	40	60.3437	103.14
40	38	41	62.1581	100.26
37	36	38	63.3770	100.61
39	38	37	65.7471	99.75
40	37	39	64.8037	100.25
37	39	40	63.3137	98.72

38.96	38.67	38.33
Probe Exit Temperature (°F)	Filter Temperature (°F)	Outlet Impinger Temperature (°F)

POST TEST CALCULATION

VOLUME DRY GAS
Vm(std) = 64.5392

VOLUME H2O VAPOR
Vw(std) = 0.5790

MOISTURE CONTENT
Bws = 0.0089

Vm 86.7720
Vm(std) = 64.5392

Vic(mls) 12.3
Vw(std) = 0.5790

MOL WT DRY STACK GASES

Mds = 28.8680

MOL WT WET STACK GASES

Mws = 28.7714

STACK VELOCITY
Vs = 56.7782

Kp 85.49
Vs = 56.7782

DRY STACK FLOW RATE

Q(std) = 1.3155E+05

ISOKINETIC CALCULATION

An = 1.9897E-04

% ISO = 100.0995

PARTICULATE CONCENTRATION
Cs = 5.1132E-05

Mn 3.3
Cs = 5.1132E-05
lbs/dscf = 1.1272E-07
grains/dscf = 0.0008
lbs/hr = 0.0148

Initial Leak Check Rate
Finish 820.404
Start 820.401
Rate = 0.0030

Pitot Tubes
A = OK
B = OK

Vac. = 19.7

Final Leak Check Rate
Finish 907.483
Start 907.478
Rate = 0.0050

Pitot Tubes
A = OK
B = OK

Vac. = 18.8

American Environmental Testing Company, Inc.
565 South Birch Drive
Spanish Fork, Utah 84660
(801) 266-7111

LABORATORY DATA
EPA Method 5

Company: Chemstar Jim Run Number: #3 RAC

Sampling Location: RAC OC-126 Date: 2/13/93

Moisture Collected

	Initial Weight	Final Weight	Weight Gain
Impinger 1	576.3	574.5	-1.8
Impinger 2	579.9	582.0	2.1
Impinger 3	530.4	531.1	0.7
Impinger 4	630.8	642.1	11.3

Total Gain = 12.3 g Total

Particulate Collected

Front - Half Analysis (Nozzle, Probe, Filter and Oven Glassware)

1. Filter Final Weight 0.6222
2. Filter Tare Weight 0.6200 BL-6
3. Total Filter Weight 0.0022 = 2.2 mg
4. Particulate caught in nozzle, probe and glassware 0.0011 = 1.1 mg
5. Total Front - Half Catch 0.0033 = 3.3 mg

3.3 mg Total

Back - Half Analysis (Impingers, and Connecting Glassware)

1. Particulate caught in impingers evaporated down at less than 120° F. 1.0 mg

Total Particulate Catch (Sum of Front and Back - Half Catches)

4.3 mg

AMERICAN ENVIRONMENTAL TESTING, INCORPORATED
565 So. Birch Drive 801-266-7111
Spanish Fork, Utah 84660

POST TEST EVAPORATION

COMPANY: Chemstar Jeans
SOURCE: DC-126
DATE: 2-13-93

ACETONE BLANK

Volume of Liquid: 150 mils
Final Weight: 96.1400
3A Tare Weight: 96.1398
Residue: 0.0002

WATER BLANK

Volume of Liquid: 250 mils
Final Weight: 103.1914
X-1 Tare Weight: 103.1911
Residue: 0.0003

RUN #1

Volume of Liquid: 150 mils (adj)
Color: Clear
Final Weight: 99.6730
H-4 Tare Weight: 99.6719
Residue & Blank: 0.0011
- Blank: 0.0002
Residue: 0.0009 = 0.9 mg

RUN #1

Volume of Liquid: 250 mils (adj)
Color: Clear
Final Weight: 102.5944
X-3 Tare Weight: 102.5934
Residue & Blank: 0.0010
- Blank: 0.0003
Residue: 0.0007 = 0.7 mg

RUN #2

Volume of Liquid: 150 mils (adj)
Color: Clear
Final Weight: 98.4827
Tare Weight: 98.4812
H-7 Residue & Blank: 0.0015
- Blank: 0.0002
Residue: 0.0013 = 1.3 mg

RUN #2

Volume of Liquid: 250 mils (adj)
Color: Clear
Final Weight: 101.8565
X-8 Tare Weight: 101.8553
Residue & Blank: 0.0012
- Blank: 0.0003
Residue: 0.0009 = 0.9 mg

RUN #3

Volume of Liquid: 150 mils (adj)
Color: Clear
Final Weight: 97.8176
H-5 Tare Weight: 97.8163
Residue & Blank: 0.0013
- Blank: 0.0002
Residue: 0.0011 = 1.1 mg

RUN #3

Volume of Liquid: 250 mils (adj)
Color: Clear
Final Weight: 102.4500
X-2 Tare Weight: 102.4487
Residue & Blank: 0.0013
- Blank: 0.0003
Residue: 0.0010 = 1.0 mg

American Environmental
Testing Company, Inc.
565 South Birch Drive
Spanish Fork, Utah 84660
801-266-7111

Tennile Plant - Bancroft, Idaho.
2/13-93 Chemstar Lime
QC-126
RAC

ORSAT ANALYSIS

(Ave. of 3 Analyses Each)

TEST NO.	DESCRIPTION	VOLUME PERCENT - DRY			
		NITROGEN	OXYGEN	CARBON DIOXIDE	CARBON MONOXIDE
1	with EPA	78.9	20.9	0.2	<0.1
	Method 5 Compliance.	78.9	20.9	0.2	<0.1
		78.9	20.9	0.2	<0.1
	AVERAGE	78.9	20.9	0.2	<0.1

AMERICAN ENVIRONMENTAL TESTING, INCORPORATED
585 So. Birch Drive 801-266-7111
Spanish Fork, Utah 84660

PARTICULATE FIELD DATA FORMAT

1	Plant	Chemstar Lime Plant
2	City	Bancroft, Idaho
3	Location	Belt DC - 129
4	Operator	J.D. Schiller
5	Date	2/13/93
6	Method and Run	EPA 5 - #1 Compliance
7	Stack Diameter (in)	12
8	Sample Box Number	CR 1A
9	Meter Box Number	CR (097)
10	Meter ^H@	2.116
11	Meter Calibration, Y	1.142
12	Pitot Tube, Cp	0.8413
13	Probe Length (ft)	6' - A
14	Probe Liner Material	Stainless Steel
15	Probe Heater Setting (°F)	Ambient
16	Ambient Temperature (°F)	40
17	Barometeric Press., Pb (in Hg)	23.7
18	Assumed Moisture (%)	2
19	Static Pressure, Ps (in H20)	-0.68
20	C Factor	0
21	Reference ^P (in H20)	1.09
22	Nozzle Identification Number	3/16 - #9
23	Nozzle Diameter (in)	0.188
24	Thermometer Number	1-A
25	Pretest Leak Rate (CFM)	0.0010
26	Leak Check Vacuum (in H20)	20.4
27	Filter Number	CL - #4
28	Gas Analysis	
29	CO (%)	0
30	CO2 (%)	0.20
31	O2 (%)	20.90
	N2 (%)	78.90

PRETEST CALCULATIONS

NOZZLE DIAMETER

Dn = 0.188

constant	0.0357
Qm	0.75
Pb(in HG)	23.7
Pgm(in H20)	-0.68
Pm	23.6500
Cp	0.8413
Tm(°F)	75
Tm(°R)	535
Bwm	0
Bws	0.02
Ts(°F)	32
Ts(°R)	492
Mds	28.868
Ms	28.6506
Pb(in HG)	23.7
Pgs(in H20)	-0.68
Ps	23.6500
(^P)avg	1.09

Dn = 0.1814

PRETEST DATA

Cp	0.8413
Imp V(H20)(ml)	67.5000
Gel H20(g)	12.0000
V(H20)(ml)	127.8000
Vm(acf)	49.2300
^h avg	0.2000
Vwc	6.0155
Vmc	43.9601

Bws = 0.1204

ISOKINETIC ^H

^H = 0.8618

constant	849.8000
^H@	1.0000
Mds	28.8680
Mm	28.8680
K	0.7906
^P	1.0900

^H = 0.8618

Sample Point	Meter Temperature Outlet (°F)	Meter Temperature Inlet (°F)	Stack Temp Ts (°F)	Gas Volume Vm (ft3)	Gas Volume difference (ft3)
starting				3839.839	
1	69	69	38	3845.51	5.67
2	69	70	39	3852.01	6.50
3	71	71	39	3858.62	6.61
4	71	71	40	3865.45	6.83
5	72	71	41	3872.33	6.88
6	72	73	41	3879.43	7.10
7	73	72	41	3885.47	6.04
8	74	72	41	3891.96	6.49
9	75	75	42	3898.63	6.67
10	73	73	41	3905.29	6.66
11	73	73	42	3912.14	6.85
12	73	73	41	3919.07	6.93

avg °F		72.00	40.50		
avg °R		532.00	500.50		
total =				79.2310	79.23
average =	72.08	71.92	40.50		
Sample Point	Meter Temperature Inlet (°F)	Meter Temperature Outlet (°F)	Stack Temp (°F) T	Gas Volume Vm	Gas Volume Vm

Velocity Head ^Ps (in H20)	Pressure Diff ^H (in H20)	Sqrt ^Ps	Sampling Time (min)	Clock Time (24 hrs)	Vacuum (in Hg)
0.88	1.44	0.9381	10	945	8
1.04	1.69	1.0198	10	955	8.1
1.08	1.76	1.0392	10	1005	8.9
1.19	1.94	1.0909	10	1015	9.1
1.21	1.97	1.1000	10	1025	9.5
1.27	2.07	1.1269	10	1035	10
0.92	1.50	0.9592	10	1050	7.8
1.05	1.71	1.0247	10	1100	8.3
1.1	1.80	1.0488	10	1110	9.2
1.13	1.85	1.0630	10	1120	9.3
1.17	1.91	1.0817	10	1130	9.8
1.2	1.96	1.0954	10	1140	9.9

			120	120	
1.1033	1.8005	1.0490	10	1052.50	8.99
Velocity Head ^Ps	Pressure Diff ^H	Sqrt ^Ps	Sampling Time	Clock Time	Vacuum

Probe Temperature Exit (°F)	Filter Temperature (°F)	Impinger Temperature Outlet (°F)	Vs	Point to Point Isokinetics
45	45	33	57.7068	92.65
45	44	33	62.7969	97.77
44	44	34	63.9931	97.31
44	45	34	67.2403	95.94
45	44	34	67.8708	95.85
46	46	35	69.5332	96.40
45	47	37	59.1812	96.19
44	45	39	63.2244	96.72
45	46	37	64.7768	96.88
45	46	35	65.5888	95.71
45	45	36	66.8061	96.86
46	46	38	67.5897	96.68

44.92	45.25	35.42
Probe Exit Temperature (°F)	Filter Temperature (°F)	Outlet impinger Temperature (°F)

POST TEST CALCULATION

VOLUME DRY GAS
Vm(std) = 71.1291

VOLUME H2O VAPOR
Vw(std) = 0.5507

MOISTURE CONTENT
Bws = 0.0077

Vm 79.2310
Vm(std) = 71.1291

Vic(mls) 11.7
Vw(std) = 0.5507

MOL WT DRY STACK GASES

Mds = 28.8680

MOL WT WET STACK GASES

Mws = 28.7845

STACK VELOCITY
Vs = 64.6903

Kp 85.49
Vs = 64.6903

DRY STACK FLOW RATE

Q(std) = 1.5135E+05

ISOKINETIC CALCULATION

An = 1.9277E-04

% ISO = 96.2738

PARTICULATE CONCENTRATION
Cs = 1.1669E-04

Mn 8.3
Cs = 1.1669E-04
lbs/dscf = 2.5725E-07
grains/dscf = 0.0018
lbs/hr = 0.0389

Initial Leak Check Rate

Finish	3839.672	Pitot Tubes
Start	3839.671	A = OK
Rate = 0.0010		B = OK
	Vac. = 20.4	

Final Leak Check Rate

		Pitot Tubes
Finish	3919.344	A = OK
Start	3919.341	B = OK
Rate = 0.0030		
	Vac. = 20.9	

American Environmental Testing Company, Inc.
565 South Birch Drive
Spanish Fork, Utah 84660
(801) 266-7111

LABORATORY DATA
EPA Method 5

Company: Chemstar Lime, Bancroft Run Number: #1 C.R. Box

Sampling Location: DC-129 Date: 2-13-93

Moisture Collected

	Initial Weight	Final Weight	Weight Gain
Impinger 1	523.4	517.2	-6.2
Impinger 2	553.4	555.4	2.0
Impinger 3	458.9	461.4	2.5
Impinger 4	639.7	653.1	13.4

Total Gain = 11.7 g total

Particulate Collected

Front - Half Analysis (Nozzle, Probe, Filter and Oven Glassware)

1. Filter Final Weight 0.7656
2. Filter Tare Weight 0.7581 g CL-#4
3. Total Filter Weight 0.0075 = 7.5 mg
4. Particulate caught in nozzle, probe and glassware 0.0009 = 0.9 mg
5. Total Front - Half Catch 0.0083 = 8.3 mg

8.3 mg Total

Back - Half Analysis (Impingers, and Connecting Glassware)

1. Particulate caught in impingers evaporated down at less than 120° F. 0.6 mg

Total Particulate Catch (Sum of Front and Back - Half Catches)

8.9 mg

AMERICAN ENVIRONMENTAL TESTING, INCORPORATED
365 So. Birch Drive 801-266-7111
Spanish Fork, Utah 84660

PARTICULATE FIELD DATA FORMAT

1	Plant	Chemstar Lime Plant
2	City	Bancroft, Idaho
3	Location	Belt DC - 129
4	Operator	J.D. Schiller
5	Date	2/13/93
6	Method and Run	EPA 5 - #2 Compliance
7	Stack Diameter (in)	12
8	Sample Box Number	CR 1A
9	Meter Box Number	CR (097)
10	Meter ^H@	2.116
11	Meter Calibration, Y	1.142
12	Pitot Tube, Cp	0.8413
13	Probe Length (ft)	6' - A
14	Probe Liner Material	Stainless Steel
15	Probe Heater Setting (°F)	Ambient
16	Ambient Temperature (°F)	45
17	Barometeric Press., Pb (in Hg)	23.74
18	Assumed Moisture (%)	2
19	Static Pressure, Ps (in H2O)	-0.68
20	C Factor	0
21	Reference ^P (in H2O)	1.09
22	Nozzle Identification Number	3/16 - #9
23	Nozzle Diameter (in)	0.1877
24	Thermometer Number	1-A
25	Pretest Leak Rate (CFM)	0.0020
26	Leak Check Vacuum (in H2O)	20
27	Filter Number	CL - #5
28	Gas Analysis	
29	CO (%)	0
30	CO2 (%)	0.20
31	O2 (%)	20.90
	N2 (%)	78.90

Velocity Head ^Ps (in H20)	Pressure Diff ^H (in H20)	Sqrt ^Ps	Sampling Time (min)	Clock Time (24 hrs)	Vacuum (in Hg)
				1210	
0.9	1.47	0.9487	10	1220	5
1.06	1.73	1.0296	10	1230	6.9
1.1	1.80	1.0488	10	1240	7.1
1.15	1.88	1.0724	10	1250	7.9
1.25	2.04	1.1180	10	1300	8.2
1.24	2.02	1.1136	10	1320	8.1
0.98	1.60	0.9899	10	1330	6.5
1.02	1.67	1.0100	10	1340	6.7
1.05	1.72	1.0247	10	1350	6.9
1.1	1.80	1.0488	10	1400	7.1
1.2	1.96	1.0954	10	1410	7.9
1.25	2.04	1.1180	10	1420	7.9
			120	120	
1.1083	1.8096	1.0515	10	1317.50	7.18
Velocity Head ^Ps	Pressure Diff ^H	Sqrt ^Ps	Sampling Time	Clock Time	Vacuum

PRETEST CALCULATIONS

NOZZLE DIAMETER

Dn = 0.1877

constant	0.0357
Qm	0.75
Pb(in HG)	23.74
Pgm(in H20)	-0.68
Pm	23.6900
Cp	0.8413
Tm(°F)	75
Tm(°R)	535
Bwm	0
Bws	0.02
Ts(°F)	32
Ts(°R)	492
Mds	28.868
Ms	28.6506
Pb(in HG)	23.74
Pgs(in H20)	-0.68
Ps	23.6900
(^P)avg	1.09

Dn = 0.1815

PRETEST DATA

Cp	0.8413
Imp V(H20)(ml)	67.5000
Gel H20(g)	12.0000
V(H20)(ml)	127.8000
Vm(acf)	49.2300
^h avg	0.2000
Vwc	6.0155
Vmc	44.0342

Bws = 0.1202

ISOKINETIC ^H

^H = 0.8563

constant	849.8000
^H@	1.0000
Mds	28.8680
Mm	28.8680
K	0.7856
^P	1.0900

^H = 0.8563

Sample Point	Meter Temperature Outlet (°F)	Meter Temperature Inlet (°F)	Stack Temp Ts (°F)	Gas Volume Vm (ft3)	Gas Volume difference (ft3)
starting				3919.601	
1	73	73	39	3925.71	6.11
2	73	74	39	3932.32	6.61
3	73	73	38	3939.03	6.71
4	73	74	39	3945.94	6.91
5	74	74	38	3953.09	7.15
6	74	75	40	3960.16	7.07
7	74	74	40	3966.41	6.25
8	75	75	39	3972.74	6.33
9	76	77	39	3979.24	6.50
10	75	74	39	3985.88	6.64
11	74	75	40	3992.72	6.84
12	74	74	39	3999.86	7.14

avg °F		74.17	39.08		
avg °R		534.17	499.08		
total =				80.2590	80.26
average =	74.00	74.33	39.08		
Sample Point	Meter Temperature Inlet (°F)	Meter Temperature Outlet (°F)	Stack Temp (°F) T	Gas Volume Vm	Gas Volume Vm

Probe Temperature Exit (°F)	Filter Temperature (°F)	Impinger Temperature Outlet (°F)	Vs	Point to Point Isokinetics
47	48	35	58.3229	98.13
46	48	35	63.2952	97.82
45	47	35	64.4138	97.49
42	44	35	65.9275	98.22
41	43	34	68.6653	97.35
40	42	34	68.5273	96.74
40	41	33	60.9208	96.16
44	46	31	62.0895	95.21
46	47	31	62.9959	96.11
46	46	31	64.4784	96.30
47	48	31	67.4129	95.12
46	47	30	68.7342	97.31

44.17	45.58	32.92
Probe Exit Temperature (°F)	Filter Temperature (°F)	Outlet Impinger Temperature (°F)

POST TEST CALCULATION

VOLUME DRY GAS
Vm(std) = 72.1750

VOLUME H2O VAPOR
Vw(std) = 0.2589

MOISTURE CONTENT
Bws = 0.0036

Vm 80.2590
Vm(std) = 72.1750

Vic(mls) 5.5
Vw(std) = 0.2589

MOL WT DRY STACK GASES
Mds = 28.8680

STACK VELOCITY
Vs = 64.6488

Kp 85.49
Vs = 64.6488

DRY STACK FLOW RATE
Q(std) = 1.5257E+05

MOL WT WET STACK GASES
Mws = 28.8292

ISOKINETIC CALCULATION
An = 1.9216E-04
% ISO = 96.8287

PARTICULATE CONCENTRATION
Cs = 4.0180E-05

Mn 2.9
Cs = 4.0180E-05
lbs/dscf = 8.8581E-08
grains/dscf = 0.0006
lbs/hr = 0.0135

Initial Leak Check Rate

Finish	3919.553	Pitot Tubes
Start	3919.551	A = OK
Rate = 0.0020		B = OK

Vac. = 20

Final Leak Check Rate

		Pitot Tubes
Finish	4000.214	A = OK
Start	4000.212	B = OK
Rate = 0.0020		

Vac. = 20.5

American Environmental Testing Company, Inc.
565 South Birch Drive
Spanish Fork, Utah 84660
(801) 266-7111

LABORATORY DATA
EPA Method 5

Company: Chemstar Lime - Idaho Run Number: #2 cz. Box

Sampling Location: _____ Date: _____

Moisture Collected

	Initial Weight	Final Weight	Weight Gain
Impinger 1	519.3	511.5	-7.8
Impinger 2	555.0	558.4	+3.4
Impinger 3	460.1	461.0	+0.9
Impinger 4	643.4	652.4	9.0

Total Gain = 5.5g total.

Particulate Collected

Front - Half Analysis (Nozzle, Probe, Filter and Oven Glassware)

1. Filter Final Weight 0.7560
2. Filter Tare Weight 0.7550 CL #5
3. Total Filter Weight 0.0010 = 1.0 mg.
4. Particulate caught in nozzle, probe and glassware 0.0019 = 1.9 mg.
5. Total Front - Half Catch 0.0029 = 2.9 mg.

Back - Half Analysis (Impingers, and Connecting Glassware)

1. Particulate caught in impingers evaporated down at less than 120° F. 0.9

Total Particulate Catch (Sum of Front and Back - Half Catches)

3.8 mg.

AMERICAN ENVIRONMENTAL TESTING, INCORPORATED
565 So. Birch Drive 801-266-7111
Spanish Fork, Utah 84660

PARTICULATE FIELD DATA FORMAT

1	Plant	Chemstar Lime Plant
2	City	Bancroft, Idaho
3	Location	Belt DC - 129
4	Operator	J.D. Schiller
5	Date	2/13/93
6	Method and Run	EPA 5 - #3 Compliance
7	Stack Diameter (in)	12
8	Sample Box Number	CR 1A
9	Meter Box Number	CR (097)
10	Meter ^H@	2.116
11	Meter Calibration, Y	1.142
12	Pitot Tube, Cp	0.8413
13	Probe Length (ft)	6' - A
14	Probe Liner Material	Stainless Steel
15	Probe Heater Setting (°F)	Ambient
16	Ambient Temperature (°F)	45
17	Barometeric Press., Pb (in Hg)	23.74
18	Assumed Moisture (%)	2
19	Static Pressure, Ps (in H2O)	-0.68
20	C Factor	0
21	Reference ^P (in H2O)	1.09
22	Nozzle Identification Number	3/16 - #9
23	Nozzle Diameter (in)	0.188
24	Thermometer Number	1-A
25	Pretest Leak Rate (CFM)	0.0020
26	Leak Check Vacuum (in H2O)	19.6
27	Filter Number	CL - #6
28	Gas Analysis	
29	CO (%)	0
30	CO2 (%)	0.20
31	O2 (%)	20.90
	N2 (%)	78.90

PRETEST CALCULATIONS

NOZZLE DIAMETER		PRETEST DATA		ISOKINETIC ^H	
Dn = 0.188				^H = 0.8618	
constant	0.0357	Cp	0.8413	**constant**	849.8000
Qm	0.75	Imp V(H2O)(ml)	67.5000	**^H@**	1.0000
Pb(in HG)	23.74	Gel H2O(g)	12.0000	Mds	28.8680
Pgm(in H2O)	-0.68	V(H2O)(ml)	127.8000	**Mm**	28.8680
Pm	23.6900	Vm(acf)	49.2300	**K**	0.7906
Cp	0.8413	^h avg	0.2000	**^P**	1.0900
Tm(°F)	75	Vwc	6.0155	^H = 0.8618	
Tm(°R)	535	Vmc	44.0342		
Bwm	0	Bws = 0.1202			
Bws	0.02				
Ts(°F)	32				
Ts(°R)	492				
Mds	28.868				
Ms	28.6506				
Pb(in HG)	23.74				
Pgs(in H2O)	-0.68				
Ps	23.6900				
(^P)avg	1.09				
Dn = 0.1815					

Sample Point	Meter Temperature Outlet (°F)	Meter Temperature Inlet (°F)	Stack Temp Ts (°F)	Gas Volume Vm (ft3)	Gas Volume difference (ft3)
starting				4000.832	
1	75	76	37	4007.06	6.23
2	76	74	39	4013.68	6.62
3	76	73	38	4020.78	7.10
4	75	74	37	4027.48	6.70
5	75	75	37	4034.44	6.96
6	75	74	35	4041.67	7.23
7	76	75	35	4048.12	6.45
8	75	73	36	4054.71	6.59
9	76	74	34	4062.85	8.14
10	74	73	34	4069.68	6.83
11	74	73	33	4076.95	7.27
12	75	73	32	4084.16	7.21

avg °F		74.54	35.58		
avg °R		534.54	495.58		
total =				83.3280	83.33
average =	75.17	73.92	35.58		
Sample Point	Meter Temperature Inlet (°F)	Meter Temperature Outlet (°F)	Stack Temp (°F) T	Gas Volume Vm	Gas Volume Vm

Velocity Head ^Ps (in H20)	Pressure Diff ^H (in H20)	Sqrt ^Ps	Sampling Time (min)	Clock Time (24 hrs)	Vacuum (in Hg)
				1540	
0.89	1.47	0.9434	10	1550	4.2
1.08	1.78	1.0392	10	1600	4.5
1.2	1.98	1.0954	10	1610	5
1.12	1.85	1.0583	10	1620	4.7
1.21	2.00	1.1000	10	1630	5.1
1.22	2.02	1.1045	10	1640	5.1
0.99	1.64	0.9950	10	1700	4.4
1.01	1.67	1.0050	10	1710	4.4
1.56	2.59	1.2490	10	1720	6.1
1.1	1.82	1.0488	10	1730	4.8
1.26	2.09	1.1225	10	1740	5.3
1.23	2.05	1.1091	10	1750	5.2

			120	120	
1.1558	1.9144	1.0725	10	1666.67	4.90
Velocity Head ^Ps	Pressure Diff ^H	Sqrt ^Ps	Sampling Time	Clock Time	Vacuum

Probe Temperature Exit (°F)	Filter Temperature (°F)	Impinger Temperature Outlet (°F)	Vs	Point to Point Isokinetics
41	42	34	57.9141	99.86
41	41	35	63.9254	96.73
41	41	34	67.3158	98.47
40	42	34	64.9679	96.05
40	41	34	67.5278	95.95
41	42	34	67.6697	99.16
40	41	35	60.9581	97.91
39	40	35	61.6330	99.42
38	39	36	76.4429	98.71
37	39	35	64.1906	98.68
37	39	34	68.6310	98.12
38	39	34	67.7402	98.29

39.42	40.50	34.50
Probe Exit Temperature (°F)	Filter Temperature (°F)	Outlet Impinger Temperature (°F)

POST TEST CALCULATION

VOLUME DRY GAS	VOLUME H2O VAPOR	MOISTURE CONTENT
Vm(std) = 74.9590	Vw(std) = 0.4942	Bws = 0.0066

Vm 83.3290 Vic(mls) 10.5
Vm(std) = 74.9590 Vw(std) = 0.4942

MOL WT DRY STACK GASES

Mds = 28.8680

MOL WT WET STACK GASES

Mws = 28.7968

STACK VELOCITY

Vs = 65.7469

Kp 85.49
Vs = 65.7469

DRY STACK FLOW RATE

Q(std) = 1.5579E+05

ISOKINETIC CALCULATION

An = 1.9277E-04

% ISO = 98.1020

PARTICULATE CONCENTRATION

Cs = 4.1356E-05

Mn 3.1
Cs = 4.1356E-05
lbs/dscf = 9.1173E-08
grains/dscf = 0.0006
lbs/hr = 0.0142

Initial Leak Check Rate

		Pitot Tubes
Finish	4000.515	
Start	4000.513	A = OK
Rate = 0.0020		B = OK

Vac. = 19.6

Final Leak Check Rate

		Pitot Tubes
Finish	4084.389	A = OK
Start	4084.386	B = OK
Rate = 0.0030		

Vac. = 20.2

American Environmental Testing Company, Inc.
565 South Birch Drive
Spanish Fork, Utah 84660
(801) 266-7111

LABORATORY DATA
EPA Method 5

Company: Chemstar lime Run Number: #3 CR Box

Sampling Location: DC-129 Date: 2-13-93

Moisture Collected

	Initial Weight	Final Weight	Weight Gain
Impinger 1	509.4	503	-6.4
Impinger 2	558.8	560.9	2.1
Impinger 3	462.0	468.2	6.2
Impinger 4	662.4	671.0	8.6

Total Gain = 10.5 Total

Particulate Collected

Front - Half Analysis (Nozzle, Probe, Filter and Oven Glassware)

1. Filter Final Weight 0.7710
2. Filter Tare Weight 0.7701 CLR
3. Total Filter Weight 0.0009 = 0.9 mg
4. Particulate caught in nozzle, probe and glassware 0.0022 = 2.2 mg
5. Total Front - Half Catch 0.0031 = 3.1 mg

3.1 mg Total

Back - Half Analysis (Impingers, and Connecting Glassware)

1. Particulate caught in impingers evaporated down at less than 120° F. 1.1 mg

Total Particulate Catch (Sum of Front and Back - Half Catches)

4.2 mg

American Environmental
Testing Company, Inc.
565 South Birch Drive
Spanish Fork, Utah 84660
801-266-7111

Chemstar Lime - Bancroft, Idaho.
2/13/93 Baghouse stack.

QC-129

ORSAT ANALYSIS

(Ave. of 3 Analyses Each)

TEST NO.	DESCRIPTION	VOLUME PERCENT - DRY			
		NITROGEN	OXYGEN	CARBON DIOXIDE	CARBON MONOXIDE
1	W/EPA Method	78.9	20.9	0.2	<0.1
5	Compliance	78.9	20.9	0.2	<0.1
	Test # 1	78.9	20.9	0.2	<0.1
	AVERAGE	78.9	20.9	0.2	<0.1

AMERICAN ENVIRONMENTAL TESTING, INCORPORATED
565 So. Birch Drive 801-266-7111
Spanish Fork, Utah 84660

POST TEST EVAPORATION

COMPANY: Chemstar Lime
SOURCE: DC-129
DATE: 2-13-93

ACETONE BLANK

Volume of Liquid	150 mls
Final Weight	96.1400
3A Tare Weight	96.1398
Residue	0.0002

WATER BLANK

Volume of Liquid	250 mls
Final Weight	103.1914
X-1 Tare Weight	103.1911
Residue	0.0003

RUN #1

Volume of Liquid	150 mls (Adj)
Color	Clear
Final Weight	98.7405
B-10 Tare Weight	98.7394
Residue & Blank	0.0011
- Blank	0.0002
Residue	0.0009 = 0.9mg

RUN #1

Volume of Liquid	250 mls (adj)
Color	Clear
Final Weight	101.8428
M-3 Tare Weight	101.8419
Residue & Blank	0.0009
- Blank	0.0003
Residue	0.0006 = 0.6mg

RUN #2

Volume of Liquid	150 mls (adj)
Color	Clear
B-12 Final Weight	97.8566
Tare Weight	97.8545
Residue & Blank	0.0021
- Blank	0.0002
Residue	0.0019 = 1.9mg

RUN #2

Volume of Liquid	250 mls (adj)
Color	Clear
M-7 Final Weight	103.1478
Tare Weight	103.1466
Residue & Blank	0.0012
- Blank	0.0003
Residue	0.0009 = 0.9mg

RUN #3

Volume of Liquid	150 mls (adj)
Color	Clear
B-15 Final Weight	98.7017
Tare Weight	98.6993
Residue & Blank	0.0024
- Blank	0.0002
Residue	0.0022 = 2.2mg

RUN #3

Volume of Liquid	250 mls (adj)
Color	Clear
M-10 Final Weight	102.5412
Tare Weight	102.5398
Residue & Blank	0.0014
- Blank	0.0003
Residue	0.0011 = 1.1mg

AMERICAN ENVIRONMENTAL TESTING, INCORPORATED
565 So. Birch Drive 801-256-7111
Spanish Fork, Utah 84660

PARTICULATE FIELD DATA FORMAT

1	Plant	Chemstar Lime
2	City	Bancroft, Idaho
3	Location	DC-230
4	Operator	Jason Robarge
5	Date	2/15/93
6	EPA Method and Run #	EPA - 5 #1
7	Stack Diameter (in)	28
8	Sample Box Number	RAC #1A
9	Meter Box Number	RAC 1
10	Meter "H@	1.815
11	Meter Calibration, Y	1.002
12	Pitot Tube, Cp	0.8396
13	Probe Length (ft)	4' - C
14	Probe Liner Material	Teflon
15	Probe Heater Setting (°F)	Ambient
16	Ambient Temperature (°F)	17
17	Barometeric Press., Pb (in Hg)	23.33
18	Assumed Moisture (%)	2
19	Static Pressure, Ps (in H20)	-0.05
20	C Factor	0
21	Reference "P (in H20)	0.35
22	Nozzle Identification Number	1/4" - #2
23	Nozzle Diameter (in)	0.2443
24	Thermometer Number	1-A
25	Pretest Leak Rate (CFM)	0.00
26	Leak Check Vacuum (in H20)	18.5
27	Filter Number	RL-7
28	Gas Analysis	
29	CO (%)	0
30	CO2 (%)	0.2
31	O2 (%)	20.9
32	N2 (%)	78.9
33	Stack Square Feet	4.276

PRETEST CALCULATIONS

NOZZLE DIAMETER

Dn = 0.2443

constant	0.0357
Qm	0.75
Pb(in HG)	23.33
Pgm(in H20)	-0.05
Pm	23.3263
Cp	0.8396
Tm(°F)	100
Tm(°R)	560
Bwm	0
Bws	0.02
Ts(°F)	39
Ts(°R)	499
Mds	28.868
Ms	28.6506
Pb(in HG)	23.33
Pgs(in H20)	-0.05
Ps	23.3263
(^P)avg	0.35

Dn = 0.2358

PRETEST DATA

Cp	0.8396
Imp V(H20)(ml)	67.5000
Gel H20(g)	12.0000
V(H20)(ml)	127.8000
Vm(acf)	49.2300
^h avg	0.2000
Vwc	6.0155
Vmc	36.2741

Bws = 0.1422

ISOKINETIC ^H

^H = 0.8110

constant	849.8000
^H@	1.0000
Mds	28.8680
Mm	28.8680
K	2.3173
^P	0.3500

^H = 0.8110

Sample Point	Meter Temperature Outlet (°F)	Meter Temperature Inlet (°F)	Stack Temp Ts (°F)	Gas Volume Vm (ft3)	Gas Volume difference (ft3)
starting				908.041	
1	68	69	29	911.98	3.94
2	72	66	29	915.84	3.86
3	77	68	30	919.33	3.49
4	84	72	28	923.3	3.97
5	85	72	30	926.84	3.54
6	88	74	32	930.26	3.42
7	90	77	33	933.83	3.57
8	92	79	34	937.62	3.79
9	95	82	33	941.41	3.79
10	97	84	30	945.23	3.82
11	99	86	32	949.32	4.09
12	100	88	34	952.95	3.63
13	98	85	35	956.63	3.68
14	101	90	31	960.59	3.96
15	102	92	32	964.7	4.11
16	103	93	30	968.33	3.63
17	104	94	31	972.15	3.82
18	105	96	33	975.84	3.69
19	105	97	34	979.55	3.71
20	106	98	30	983.32	3.77
21	107	98	30	987.08	3.76
22	107	99	29	990.87	3.79
23	107	99	30	994.62	3.75
24	105	99	30	998.593	3.97

avg °F		90.71	31.21		
avg °R		550.71	491.21		
total =				90.5520	90.55
average =	95.71	85.71	31.21		
Sample Point	Meter Temperature Inlet (°F)	Meter Temperature Outlet (°F)	Stack Temp (°F) T	Gas Volume Vm	Gas Volume Vm

Vacuum (in Hg)	ire	Vs	Point to Point Isokinetics
3.1		36.1949	103.92
3.2		36.1949	101.74
3		35.1815	94.19
3		36.6708	101.37
3.1		35.7106	93.09
3		35.2532	91.04
3.1		35.8197	93.30
3		36.3795	97.38
3		36.3427	96.75
3.1		36.2319	96.87
3		36.8208	102.12
3.1	3	35.8561	93.17
3.1		35.8923	94.98
3	3	36.2689	99.63
3	6	36.8208	101.80
3		34.6444	94.95
3	.7	34.6797	99.84
3.1	3	35.2890	94.92
3.1	.9	35.3248	95.45
3.1	.3	35.1815	96.43
3	.9	35.1815	96.09
3	4	35.1456	96.67
3	1.3	34.6444	97.22
3	1.9	35.7106	100.13

3.05	53.76
Vacuum	t Impinger
	nperature
	(°F)

POST TEST CALCULATION

VOLUME DRY GAS

Vm(std) = 67.0058

VOLUME H2O VAPOR

Vw(std) = 0.0847

MOISTURE CONTENT

Bws = 0.0013

Vm 90.5520

Vm(std) = 67.0058

Vic(mls) 1.8

Vw(std) = 0.0847

MOL WT DRY STACK GASES

Mds = 28.8680

STACK VELOCITY

Vs = 35.7267

DRY STACK FLOW RATE

Q(std) = 4.6030E+05

Kp 85.49

Vs = 35.7267

MOL WT WET STACK GASES

Mws = 28.8543

ISOKINETIC CALCULATION

An = 3.2552E-04

% ISO = 97.2223

PARTICULATE CONCENTRATION

Cs = 7.9098E-05

Mn 5.3

Cs = 7.9098E-05

lbs/dscf = 1.7438E-07

grains/dscf = 0.0012

lbs/hr = 0.0803

Initial Leak Check Rate

Finish 907.899

Start 907.897

Rate = 0.0020

Pitot Tubes

A = OK

B = OK

Vac. = 18.5

Final Leak Check Rate

Finish 998.814

Start 998.811

Rate = 0.0030

Pitot Tubes

A = OK

B = OK

Vac. = 19

American Environmental Testing Company, Inc.
565 South Birch Drive
Spanish Fork, Utah 84660
(801) 266-7111

LABORATORYDATA
EPA Method 5

Company: Chemstar Lime Run Number: #1 BAC

Sampling Location: AC-230 Date: 2-15-93

Moisture Collected

	Initial Weight	Final Weight	Weight Gain
Impinger 1	570.2	563.6	-6.6
Impinger 2	582.7	578.8	-3.9
Impinger 3	532.6	531.7	-0.9
Impinger 4	611.0	624.2	13.2

Total Gain = 1.8 g. total

Particulate Collected

Front - Half Analysis (Nozzle, Probe, Filter and Oven Glassware)

1. Filter Final Weight 0.6185
2. Filter Tare Weight 0.6134 RL-#7
3. Total Filter Weight 0.0047 = 4.7mg.
4. Particulate caught in nozzle, probe and glassware 0.6mg.
5. Total Front - Half Catch 5.3mg. Total.

Back - Half Analysis (Impingers, and Connecting Glassware)

1. Particulate caught in impingers evaporated down at less than 120° F. 0.4mg.

Total Particulate Catch (Sum of Front and Back - Half Catches)

5.7mg.

AMERICAN ENVIRONMENTAL TESTING, INCORPORATED
565 So. Birch Drive 801-266-7111
Spanish Fork, Utah 84660

PARTICULATE FIELD DATA FORMAT

1	Plant	Chemstar Lime
2	City	Bancroft, Idaho
3	Location	DC-230
4	Operator	Jason Robarge
5	Date	2/15/93
6	EPA Method and Run #	EPA - 5 #2
7	Stack Diameter (in)	28
8	Sample Box Number	RAC #1 A
9	Meter Box Number	RAC 1
10	Meter ^H@	1.815
11	Meter Calibration, Y	1.002
12	Pitot Tube, Cp	0.8396
13	Probe Length (ft)	4' - C
14	Probe Liner Material	Teflon
15	Probe Heater Setting (°F)	Ambient
16	Ambient Temperature (°F)	15
17	Barometeric Press., Pb (in Hg)	23.3
18	Assumed Moisture (%)	2
19	Static Pressure, Ps (in H20)	-0.05
20	C Factor	0
21	Reference ^P (in H20)	0.35
22	Nozzle Identification Number	1/4 - #2
23	Nozzle Diameter (in)	0.244
24	Thermometer Number	1-A
25	Pretest Leak Rate (CFM)	0.01
26	Leak Check Vacuum (in H20)	18
27	Filter Number	RL-8
28	Gas Analysis	
29	CO (%)	0
30	CO2 (%)	0.2
31	O2 (%)	20.9
32	N2 (%)	78.9
33	Stack Square Feet	4.276

PRETEST CALCULATIONS

NOZZLE DIAMETER

Dn = 0.244

constant	0.0357
Qm	0.75
Pb(in HG)	23.3
Pgm(in H20)	-0.05
Pm	23.2963
Cp	0.8396
Tm(°F)	100
Tm(°R)	560
Bwm	0
Bws	0.02
Ts(°F)	39
Ts(°R)	499
Mds	28.868
Ms	28.6506
Pb(in HG)	23.3
Pgs(in H20)	-0.05
Ps	23.2963
(^P)avg	0.35

Dn = 0.2357

PRETEST DATA

Cp	0.8396
Imp V(H20)(ml)	67.5000
Gel H20(g)	12.0000
V(H20)(ml)	127.8000
Vm(acf)	49.2300
^h avg	0.2000
Vwc	6.0155
Vmc	36.2275

Bws = 0.1424

ISOKINETIC ^H

^H = 0.8071

constant	849.8000
^H@	1.0000
Mds	28.8680
Mm	28.8680
K	2.3059
^P	0.3500

^H = 0.8071

Velocity Head ^Ps (in H20)	Pressure Diff ^H (in H20)	Sqrt ^Ps	Sampling Time (min)	Clock Time (24 hrs)	Vacuum (in Hg)
				1345	
0.38	1.54	0.6164	5	1350	2.5
0.37	1.50	0.6083	5	1355	2.5
0.35	1.42	0.5916	5	1400	2.5
0.36	1.49	0.6000	5	1405	2.5
0.38	1.58	0.6164	5	1410	2.5
0.4	1.66	0.6325	5	1415	2.5
0.37	1.55	0.6083	5	1420	3
0.39	1.64	0.6245	5	1425	3
0.35	1.48	0.5916	5	1430	2.5
0.39	1.65	0.6245	5	1435	2.5
0.36	1.53	0.6000	5	1440	2.5
0.38	1.62	0.6164	5	1445	2.5
0.35	1.50	0.5916	5	1500	2.5
0.36	1.54	0.6000	5	1505	2.5
0.38	1.63	0.6164	5	1510	2.5
0.33	1.42	0.5745	5	1515	2.5
0.35	1.51	0.5916	5	1520	2.5
0.34	1.47	0.5831	5	1525	2.5
0.36	1.55	0.6000	5	1530	2.5
0.35	1.51	0.5916	5	1535	2.5
0.31	1.34	0.5568	5	1540	2.5
0.35	1.52	0.5916	5	1545	2.5
0.33	1.43	0.5745	5	1550	2.5
0.35	1.52	0.5916	5	1555	2.5
			120	120	
0.3600	1.5252	0.5997	5	1469.17	2.54
Velocity Head ^Ps	Pressure Diff ^H	Sqrt ^Ps	Sampling Time	Clock Time	Vacuum

Probe Temperature Exit (°F)	Filter Temperature (°F)	Impinger Temperature Outlet (°F)	Vs	**Point to Point Isokinetics**
40	38	37	37.6976	102.93
40	38	37	37.1983	99.19
40	38	37	36.1419	97.74
40	38	37	36.5792	98.16
40	38	37	37.6203	100.66
41	38	37	38.5976	98.98
41	38	37	37.0838	100.07
41	38	37	38.0728	97.36
42	39	37	36.0676	96.79
42	39	37	38.0728	99.73
42	39	37	36.5792	100.31
43	41	38	37.5816	96.59
43	41	38	36.0676	97.83
43	41	39	36.5792	99.91
43	41	39	37.5816	98.29
43	41	39	34.9858	96.42
43	41	39	36.0304	97.53
43	41	39	35.5119	95.00
42	41	39	36.5415	102.55
43	42	40	36.0304	101.98
43	41	40	33.9091	96.56
43	42	40	36.0304	100.47
43	42	40	34.9858	95.23
43	42	40	36.0304	99.89

41.96	39.92	38.21
Probe Exit Temperature (°F)	Filter Temperature (°F)	Outlet Impinger Temperature (°F)

POST TEST CALCULATION

VOLUME DRY GAS
Vm(std) = 70.3895

VOLUME H2O VAPOR
Vw(std) = 0.0659

MOISTURE CONTENT
Bws = 0.0009

Vm 95.2170
Vm(std) = 70.3895

Vic(mls) 1.4
Vw(std) = 0.0659

MOL WT DRY STACK GASES

Mds = 28.8680

MOL WT WET STACK GASES

Mws = 28.8578

STACK VELOCITY
Vs = 36.5651

Kp 85.49
Vs = 36.5651

DRY STACK FLOW RATE

Q(std) = 4.7664E+05

ISOKINETIC CALCULATION

An = 3.2472E-04

% ISO = 98.7446

PARTICULATE CONCENTRATION
Cs = 8.5240E-05

Mn 6
Cs = 8.5240E-05
lbs/dscf = 1.8792E-07
grains/dscf = 0.0013
lbs/hr = 0.0896

Initial Leak Check Rate
Finish 990.059
Start 990.054
Rate = 0.0050

Pitot Tubes
A = OK
B = OK

Vac. = 18

Final Leak Check Rate
Finish 1086.344
Start 1086.341
Rate = 0.0030

Pitot Tubes
A = OK
B = OK

Vac. = 17.5

American Environmental Testing Company, Inc.
565 South Birch Drive
Spanish Fork, Utah 84660
(801) 266-7111

LABORATORYDATA
EPA Method 5

Company: Chemstar Lime Run Number: #2 RK

Sampling Location: DC 230 Date: 2-15-93

Moisture Collected

	Initial Weight	Final Weight	Weight Gain
Impinger 1	558.3	551.1	-7.2
Impinger 2	566.3	562.3	-4.0
Impinger 3	558.7	557.6	-1.1
Impinger 4	614.3	628.0	13.7

Total Gain = 1.4

Particulate Collected

Front - Half Analysis (Nozzle, Probe, Filter and Oven Glassware)

1. Filter Final Weight 0.6457
2. Filter Tare Weight 0.6418 RL #8
3. Total Filter Weight 0.0039 = 3.9 mg.
4. Particulate caught in nozzle, probe and glassware 2.1 mg ~~0.6 mg~~
5. Total Front - Half Catch ~~4.5 mg.~~ = 1 of 4L. 6.0 mg.

Back - Half Analysis (Impingers, and Connecting Glassware)

1. Particulate caught in impingers evaporated down at less than 120° F. ~~0.9~~ 0.4 mg.

Total Particulate Catch (Sum of Front and Back - Half Catches)

~~5.4~~ 6.4 mg

AMERICAN ENVIRONMENTAL TESTING, INCORPORATED
565 So. Birch Drive 801-266-7111
Spanish Fork, Utah 84660

PARTICULATE FIELD DATA FORMAT

1	Plant	Chemstar Lime
2	City	Bancroft, Idaho
3	Location	DC-230
4	Operator	Jason Robarge
5	Date	2/15/93
6	EPA Method and Run #	EPA - 5 #3
7	Stack Diameter (in)	28
8	Sample Box Number	RAC #1A
9	Meter Box Number	RAC 1
10	Meter ^H@	1.815
11	Meter Calibration, Y	1.002
12	Pitot Tube, Cp	0.8396
13	Probe Length (ft)	4' - C
14	Probe Liner Material	Teflon
15	Probe Heater Setting (°F)	Ambient
16	Ambient Temperature (°F)	20
17	Barometeric Press., Pb (in Hg)	23.31
18	Assumed Moisture (%)	2
19	Static Pressure, Ps (in H20)	-0.05
20	C Factor	0
21	Reference ^P (in H20)	0.35
22	Nozzle Identification Number	1/4 - #2
23	Nozzle Diameter (in)	0.244
24	Thermometer Number	1-A
25	Pretest Leak Rate (CFM)	0.00
26	Leak Check Vacuum (in H20)	19.5
27	Filter Number	RL - 9
28	Gas Analysis	
29	CO (%)	0
30	CO2 (%)	0.2
31	O2 (%)	20.9
32	N2 (%)	78.9
33	Stack Square Feet	4.276

PRETEST CALCULATIONS

NOZZLE DIAMETER

Dn = 0.244

constant	0.0357
Qm	0.75
Pb(in HG)	23.31
Pgm(in H20)	-0.05
Pm	23.3063
Cp	0.8396
Tm(°F)	100
Tm(°R)	560
Bwm	0
Bws	0.02
Ts(°F)	39
Ts(°R)	499
Mds	28.868
Ms	28.6506
Pb(in HG)	23.31
Pgs(in H20)	-0.05
Ps	23.3063
(^P)avg	0.35

Dn = 0.2357

PRETEST DATA

Cp	0.8396
Imp V(H20)(ml)	67.5000
Gel H20(g)	12.0000
V(H20)(ml)	127.8000
Vm(acf)	49.2300
^h avg	0.2000
Vwc	6.0155
Vmc	36.2430

Bws = 0.1424

ISOKINETIC ^H

^H = 0.8071

constant	849.8000
^H@	1.0000
Mds	28.8680
Mm	28.8680
K	2.3059
^P	0.3500

^H = 0.8071

Sample Point	Meter Temperature Outlet (°F)	Meter Temperature Inlet (°F)	Stack Temp Ts (°F)	Gas Volume Vm (ft3)	Gas Volume difference (ft3)
starting				86.884	
1	66	65	30	90.64	3.76
2	66	68	32	94.35	3.71
3	67	73	30	98.1	3.75
4	67	84	29	101.86	3.76
5	69	90	28	105.78	3.92
6	72	93	28	109.74	3.96
7	75	95	29	113.71	3.97
8	77	98	27	117.67	3.96
9	78	99	26	121.75	4.08
10	82	105	26	125.87	4.12
11	86	108	27	129.87	4.00
12	90	112	25	133.96	4.09
13	75	74	26	137.79	3.83
14	82	83	25	141.52	3.73
15	88	85	24	145.57	4.05
16	90	93	25	149.37	3.80
17	93	96	26	153.12	3.75
18	96	99	24	157.13	4.01
19	97	103	25	161.27	4.14
20	99	108	24	165.38	4.11
21	100	110	25	169.19	3.81
22	101	112	23	173.28	4.09
23	102	114	24	177.19	3.91
24	103	117	23	181.542	4.35

avg °F		89.69	26.29		
avg °R		549.69	486.29		
total =				94.6580	94.66
average =	84.21	95.17	26.29		
Sample Point	Meter Temperature Inlet (°F)	Meter Temperature Outlet (°F)	Stack Temp (°F) T	Gas Volume Vm	Gas Volume Vm

Velocity Head ^Ps (in H20)	Pressure Diff ^H (in H20)	Sqrt ^Ps	Sampling Time (min)	Clock Time (24 hrs)	Vacuum (in Hg)
				1615	
0.36	1.44	0.6000	5	1620	2
0.35	1.40	0.5916	5	1625	2.1
0.34	1.37	0.5831	5	1630	2
0.35	1.43	0.5916	5	1635	2
0.37	1.53	0.6083	5	1640	2.3
0.37	1.53	0.6083	5	1645	2.3
0.36	1.50	0.6000	5	1650	2.2
0.36	1.51	0.6000	5	1655	2.2
0.37	1.56	0.6083	5	1700	2.5
0.38	1.61	0.6164	5	1705	2.7
0.36	1.54	0.6000	5	1710	2.3
0.38	1.64	0.6164	5	1715	2.8
0.34	1.39	0.5831	5	1730	2
0.35	1.46	0.5916	5	1735	2.2
0.39	1.64	0.6245	5	1740	2.9
0.32	1.36	0.5657	5	1745	2
0.34	1.45	0.5831	5	1750	2.2
0.35	1.50	0.5916	5	1755	2.4
0.38	1.64	0.6164	5	1800	2.9
0.36	1.56	0.6000	5	1805	2.4
0.32	1.39	0.5657	5	1810	2.1
0.34	1.49	0.5831	5	1815	2.5
0.33	1.44	0.5745	5	1820	2.4
0.36	1.58	0.6000	5	1825	2.7

			120	120	
0.3554	1.4981	0.5960	5	1719.17	2.34
Velocity Head ^Ps	Pressure Diff ^H	Sqrt ^Ps	Sampling Time	Clock Time	Vacuum

Probe Temperature Exit (°F)	Filter Temperature (°F)	Impinger Temperature Outlet (°F)	Vs	Point to Point Isokinetics
38	38	40	36.7627	98.58
39	37	39	36.3224	98.66
37	36	38	35.7269	100.40
37	35	39	36.2115	98.12
36	35	38	37.1936	98.68
38	36	37	37.1936	99.14
39	38	39	36.7251	100.39
40	37	39	36.6500	99.48
41	35	40	37.1173	100.83
39	34	41	37.6156	99.58
37	36	40	36.6500	98.78
38	35	38	37.5769	97.44
37	33	39	35.5808	101.27
35	36	40	36.0631	95.69
36	35	41	38.0288	97.67
38	37	38	34.4829	100.26
39	38	37	35.5808	95.60
37	36	39	36.0259	100.02
38	37	35	37.5769	98.81
36	36	36	36.5369	100.03
36	35	37	34.4829	98.14
38	38	39	35.4708	101.76
39	39	40	34.9814	98.57
37	40	39	36.4991	104.61

37.71	36.33	38.67
Probe Exit Temperature (°F)	Filter Temperature (°F)	Outlet Impinger Temperature (°F)

American Environmental Testing Company, Inc.
565 South Birch Drive
Spanish Fork, Utah 84660
(801) 266-7111

LABORATORY DATA
EPA Method 5

Company: CHEMSTAR Lime. Bancroft, Idaho. Run Number: #3 RAC Box.

Sampling Location: DC-230 Baghouse. Stack Date: 2/15-93

Moisture Collected

	Initial Weight	Final Weight	Weight Gain
Impinger 1	566.6	559.6	-7.0
Impinger 2	571.4	567.8	-3.6
Impinger 3	553.7	552.7	-1.0
Impinger 4	615.3	629.0	13.7
		Total Gain =	2.1

Particulate Collected

Front - Half Analysis (Nozzle, Probe, Filter and Oven Glassware)

1. Filter Final Weight 0.6364
2. Filter Tare Weight 0.6337 RL #9
3. Total Filter Weight 0.0027 = 2.7 mg.
4. Particulate caught in nozzle, probe and glassware 1.0 mg.
5. Total Front - Half Catch 3.7 mg. Total

Back - Half Analysis (Impingers, and Connecting Glassware)

1. Particulate caught in impingers evaporated down at less than 120° F. 1.1

Total Particulate Catch (Sum of Front and Back - Half Catches)

4.8 mg.

American Environmental
Testing Company, Inc.
565 South Birch Drive
Spanish Fork, Utah 84660
801-266-7111

Chemstar Lime Co.
Fancroft Plant

2/15
/92

American Environmental
Testing Company, Inc.
565 South Birch Drive
Spanish Fork, Utah 84660
801-266-7111

Chemstar Lime Co. 2/15/93
Bancroft, Idaho
DC-230 Baghouse Stack.

ORSAT ANALYSIS

(Ave. of 3 Analyses Each)

TEST NO.	DESCRIPTION	VOLUME PERCENT - DRY			
		NITROGEN	OXYGEN	CARBON DIOXIDE	CARBON MONOXIDE
1	With EPA	78.9	20.9	0.2	<0.1
	Method 5 Compl.	78.9	20.9	0.2	<0.1
		78.9	20.9	0.2	<0.1
	AVERAGE	78.9	20.9	0.2	<0.1

AMERICAN ENVIRONMENTAL TESTING, INCORPORATED
565 So. Birch Drive 801-266-7111
Spanish Fork, Utah 84660

POST TEST EVAPORATION

COMPANY: Chemstar Lime. Bancroft, Idaho Pennwite Plant.
SOURCE: DC-230
DATE: 2/16-93 (2/15 tests).

ACETONE BLANK		WATER BLANK	
Volume of Liquid	300 mls.	Volume of Liquid	250 mls.
Final Weight	141.1115	Final Weight	103.3347
Tare Weight	141.1114	Tare Weight	103.3346
Residue	0.0001 = 0.1 mg.	Residue	0.0001

LA-1 R-2

RUN #1		RUN #1	
Volume of Liquid	300 mls.	Volume of Liquid	250 mls.
Color	Clear - No Visible Particulate	Color	clear - op
Final Weight	136.2799	Final Weight	119.3176
Tare Weight	136.2792	Tare Weight	119.3171
Residue & Blank	0.0007	Residue & Blank	0.0005
- Blank	0.0001	- Blank	0.0001
Residue	0.0006 = 0.6 mg.	Residue	0.0004 = 0.4 mg.

LA-2 R-3

RUN #2		RUN #2	
Volume of Liquid	300 mls (adj.)	Volume of Liquid	250 mls.
Color	Clear - NVP	Color	clear - op
Final Weight	147.5398	Final Weight	107.4399
Tare Weight	147.5379	Tare Weight	107.4389
Residue & Blank	0.0021	Residue & Blank	0.0010
- Blank	0.0001	- Blank	0.0001
Residue	0.0020 = 2.0 mg.	Residue	0.0009 = 0.9 mg.

LA-10 R-4

RUN #3		RUN #3	
Volume of Liquid	300 mls. (adj.)	Volume of Liquid	250 mls.
Color	Clear - NVP	Color	clear - op.
Final Weight	136.2810	Final Weight	100.6185
Tare Weight	136.2799	Tare Weight	100.6173
Residue & Blank	0.0011	Residue & Blank	0.0012
- Blank	0.0001	- Blank	0.0001
Residue	0.0010 = 1.0 mg.	Residue	0.0011 = 1.1 mg.

LA-2 R-5

AMERICAN ENVIRONMENTAL TESTING, INCORPORATED
565 So. Birch Drive 801-266-7111
Spanish Fork, Utah 84660

PARTICULATE FIELD DATA FORMAT

1	Plant	Chemstar Lime Plant
2	City	Bancroft, Idaho
3	Location	DC - 303
4	Operator	J.D. Schiller
5	Date	2/14/93
6	Method and Run	EPA 5 - #1 Compliance
7	Stack Diameter (in)	7.75
8	Sample Box Number	CR 1A
9	Meter Box Number	CR (097)
10	Meter ^H@	2.116
11	Meter Calibration, Y	1.142
12	Pitot Tube, Cp	1
13	Probe Length (ft)	6' - A
14	Probe Liner Material	Stainless Steel
15	Probe Heater Setting (°F)	Ambient
16	Ambient Temperature (°F)	37
17	Barometeric Press., Pb (in Hg)	23.67
18	Assumed Moisture (%)	2
19	Static Pressure, Ps (in H20)	-0.23
20	C Factor	0
21	Reference ^P (in H20)	0.38
22	Nozzle Identification Number	1/4-#3
23	Nozzle Diameter (in)	0.242
24	Thermometer Number	1-A
25	Pretest Leak Rate (CFM)	0.0030
26	Leak Check Vacuum (in H20)	19.4
27	Filter Number	CL - #7
28	Gas Analysis	
29	CO (%)	0
30	CO2 (%)	0.30
31	O2 (%)	20.85
	N2 (%)	78.85

PRETEST CALCULATIONS

NOZZLE DIAMETER

Dn = 0.242

constant	0.0357
Qm	0.75
Pb(in HG)	23.67
Pgm(in H20)	-0.23
Pm	23.6531
Cp	1
Tm(°F)	75
Tm(°R)	535
Bwm	0
Bws	0.02
Ts(°F)	32
Ts(°R)	492
Mds	28.882
Ms	28.6644
Pb(in HG)	23.67
Pgs(in H20)	-0.23
Ps	23.6531
(^P)avg	0.38

Dn = 0.2166

PRETEST DATA

Cp	1.0000
Imp V(H20)(ml)	67.5000
Gel H20(g)	12.0000
V(H20)(ml)	127.8000
Vm(acf)	49.2300
^h avg	0.2000
Vwc	6.0155
Vmc	43.9045

Bws = 0.1205

ISOKINETIC ^H

^H = 1.1654

constant	849.8000
^H@	1.0000
Mds	28.8820
Mm	28.8820
K	3.0669
^P	0.3800

^H = 1.1654

Sample Point	Meter Temperature Outlet (°F)	Meter Temperature Inlet (°F)	Stack Temp Ts (°F)	Gas Volume Vm (ft3)	Gas Volume difference (ft3)
starting				4085.109	
1	85	85	39	4097.8	12.69
2	89	89	38	4109.73	11.93
3	93	93	37	4122.23	12.50
4	94	94	37	4134.38	12.15
5	93	94	38	4145.92	11.54
6	93	92	38	4157.88	11.96
7	95	94	39	4169.91	12.03
8	96	94	38	4181.57	11.66

avg °F		92.06	38.00		
avg °R		552.06	498.00		
total =				96.4610	96.46
average =	92.25	91.88	38.00		
Sample Point	Meter Temperature Inlet (°F)	Meter Temperature Outlet (°F)	Stack Temp (°F) T	Gas Volume Vm	Gas Volume Vm

Velocity Head ^Ps (in H20)	Pressure Diff ^H (in H20)	Sqrt ^Ps	Sampling Time (min)	Clock Time (24 hrs)	Vacuum (in Hg)
				1005	
0.36	2.34	0.6000	15	1020	2.9
0.39	2.56	0.6245	15	1035	3
0.4	2.65	0.6325	15	1050	3.1
0.39	2.59	0.6245	15	1105	3.2
0.35	2.32	0.5916	15	1130	3
0.37	2.45	0.6083	15	1145	3.1
0.39	2.58	0.6245	15	1200	3
0.36	2.39	0.6000	15	1215	2.8

			120	120	
0.3763	2.4876	0.6132	15	1112.50	3.01
Velocity Head ^Ps	Pressure Diff ^H	Sqrt ^Ps	Sampling Time	Clock Time	Vacuum

Probe Temperature Exit (°F)	Filter Temperature (°F)	Impinger Temperature Outlet (°F)	Vs	Point to Point Isokinetics
44	44	35	43.8621	106.39
40	39	38	45.6074	95.35
41	42	37	46.1420	97.87
41	42	36	45.5616	96.15
42	43	36	43.2053	96.50
42	44	36	44.4226	97.49
41	43	37	45.6532	95.30
42	42	36	43.8182	95.91

41.63	42.38	36.38
Probe Exit Temperature (°F)	Filter Temperature (°F)	Outlet Impinger Temperature (°F)

POST TEST CALCULATION

VOLUME DRY GAS
Vm(std) = 86.6718

VOLUME H2O VAPOR
Vw(std) = 0.2448

MOISTURE CONTENT
Bws = 0.0028

Vm 96.4610
Vm(std) = 86.6718

Vic(mls) 5.2
Vw(std) = 0.2448

MOL WT DRY STACK GASES
Mds = 28.8820

STACK VELOCITY
Vs = 44.7843

DRY STACK FLOW RATE
Q(std) = 4.4143E+04

Kp 85.49
Vs = 44.7843

MOL WT WET STACK GASES
Mws = 28.8514

ISOKINETIC CALCULATION
An = 3.1942E-04
% ISO = 97.5799

PARTICULATE CONCENTRATION
Cs = 4.2690E-05

Mn 3.7
Cs = 4.2690E-05
lbs/dscf = 9.4113E-08
grains/dscf = 0.0007
lbs/hr = 0.0042

Initial Leak Check Rate
Finish 4084.828
Start 4084.825
Rate = 0.0030

Pitot Tubes
A = OK
B = OK

Vac. = 19.4

Final Leak Check Rate
Finish 4181.753
Start 4181.75
Rate = 0.0030

Pitot Tubes
A = OK
B = OK

Vac. = 20.2

American Environmental Testing Company, Inc.
565 South Birch Drive
Spanish Fork, Utah 84660
(801) 266-7111

LABORATORY DATA
EPA Method 5

Company: Chemstar Lime, Bancroft Run Number: Run # 1

Sampling Location: QC-303 Stack Date: ~~[illegible]~~ 2/14-93

Moisture Collected

	Initial Weight	Final Weight	Weight Gain
Impinger 1	522.0	518.2	-3.8
Impinger 2	555.3	554.7	-0.6
Impinger 3	460.0	459.8	-0.2
Impinger 4	635.1	644.9	~~9.8~~

Total Gain = 5.2 g total

Particulate Collected

Front - Half Analysis (Nozzle, Probe, Filter and Oven Glassware)

1. Filter Final Weight .7430
2. Filter Tare Weight .7414 CL#7
3. Total Filter Weight 0.0016 = 1.6 mg.
4. Particulate caught in nozzle, probe and glassware 2.1 mg.
5. Total Front - Half Catch ~~3.7 mg.~~ - Total

Back - Half Analysis (Impingers, and Connecting Glassware)

1. Particulate caught in impingers evaporated down at less than 120° F. 1.8 HB ~~2.1~~ mg.

Total Particulate Catch (Sum of Front and Back - Half Catches)

5.5 mg.

AMERICAN ENVIRONMENTAL TESTING, INCORPORATED
565 So. Birch Drive 801-266-7111
Spanish Fork, Utah 84660

PARTICULATE FIELD DATA FORMAT

1	Plant	Chemstar Lime Plant
2	City	Bancroft, Idaho
3	Location	DC - 303
4	Operator	J.D. Schiller
5	Date	2/14/93
6	Method and Run	EPA 5 - #2 Compliance
7	Stack Diameter (in)	7.75
8	Sample Box Number	CR 1A
9	Meter Box Number	CR (097)
10	Meter ^H@	2.116
11	Meter Calibration, Y	1.142
12	Pitot Tube, Cp	1
13	Probe Length (ft)	6' - A
14	Probe Liner Material	Stainless Steel
15	Probe Heater Setting (°F)	Ambient
16	Ambient Temperature (°F)	41
17	Barometeric Press., Pb (in Hg)	23.67
18	Assumed Moisture (%)	2
19	Static Pressure, Ps (in H20)	-0.23
20	C Factor	0
21	Reference ^P (in H20)	0.38
22	Nozzle identification Number	1/4-#3
23	Nozzle Diameter (in)	0.2417
24	Thermometer Number	1-A
25	Pretest Leak Rate (CFM)	0.0020
26	Leak Check Vacuum (in H20)	20
27	Filter Number	CL - #8
28	Gas Analysis	
29	CO (%)	0
30	CO2 (%)	0.30
31	O2 (%)	20.85
	N2 (%)	78.85

PRETEST CALCULATIONS

NOZZLE DIAMETER

Dn = 0.2417

constant	0.0357
Qm	0.75
Pb(in HG)	23.67
Pgm(in H20)	-0.23
Pm	23.6531
Cp	1
Tm(°F)	75
Tm(°R)	535
Bwm	0
Bws	0.02
Ts(°F)	32
Ts(°R)	492
Mds	28.882
Ms	28.6644
Pb(in HG)	23.67
Pgs(in H20)	-0.23
Ps	23.6531
(^P)avg	0.38

Dn = 0.2166

PRETEST DATA

Cp	1.0000
Imp V(H20)(ml)	67.5000
Gel H20(g)	12.0000
V(H20)(ml)	127.8000
Vm(acf)	49.2300
^h avg	0.2000
Vwc	6.0155
Vmc	43.9045

Bws = 0.1205

ISOKINETIC ^H

^H = 1.1597

constant	849.8000
^H@	1.0000
Mds	28.8820
Mm	28.8820
K	3.0518
^P	0.3800

^H = 1.1597

Sample Point	Meter Temperature Outlet (°F)	Meter Temperature Inlet (°F)	Stack Temp Ts (°F)	Gas Volume Vm (ft3)	Gas Volume difference (ft3)
starting				4182.185	
1	89	89	38	4194.38	12.20
2	90	90	38	4206.34	11.96
3	91	90	39	4218.71	12.37
4	92	92	38	4231.31	12.60
5	93	92	39	4243.16	11.85
6	95	94	38	4254.88	11.72
7	96	96	39	4267.06	12.18
8	97	96	39	4278.97	11.91

avg °F		92.63	38.50		
avg °R		552.63	498.50		
total =				96.7950	96.79
average =	92.88	92.38	38.50		
Sample Point	Meter Temperature Inlet (°F)	Meter Temperature Outlet (°F)	Stack Temp (°F) T	Gas Volume Vm	Gas Volume Vm

Velocity Head ^Ps (in H20)	Pressure Diff ^H (in H20)	Sqrt ^Ps	Sampling Time (min)	Clock Time (24 hrs)	Vacuum (in Hg)
				1300	
0.36	2.36	0.6000	15	1315	3.2
0.38	2.49	0.6164	15	1330	3.4
0.39	2.55	0.6245	15	1345	3.4
0.4	2.63	0.6325	15	1400	3.5
0.37	2.43	0.6083	15	1425	3.3
0.37	2.44	0.6083	15	1440	3.3
0.4	2.64	0.6325	15	1455	3.6
0.37	2.45	0.6083	15	1510	3.3

			120	120	
0.3800	2.4999	0.6163	15	1402.50	3.38
Velocity Head ^Ps	Pressure Diff ^H	Sqrt ^Ps	Sampling Time	Clock Time	Vacuum

Probe Temperature Exit (°F)	Filter Temperature (°F)	Impinger Temperature Outlet (°F)	Vs	Point to Point Isokinetics
41	43	34	43.8292	101.75
42	44	34	45.0302	97.00
42	45	34	45.6647	99.05
41	44	35	46.2000	99.28
42	45	34	44.4784	97.03
42	46	34	44.4338	95.53
41	47	35	46.2464	95.38
40	46	34	44.4784	96.83

41.38	45.00	34.25
Probe Exit Temperature (°F)	Filter Temperature (°F)	Outlet Impinger Temperature (°F)

POST TEST CALCULATION

VOLUME DRY GAS
Vm(std) = 86.9662

VOLUME H2O VAPOR
Vw(std) = 0.3624

MOISTURE CONTENT
Bws = 0.0042

Vm 96.7850
Vm(std) = 86.9662

Vic(mls) 7.7
Vw(std) = 0.3624

MOL WT DRY STACK GASES
Mds = 28.8820

STACK VELOCITY
Vs = 45.0451

DRY STACK FLOW RATE
Q(std) = 4.4296E+04

Kp 85.49

MOL WT WET STACK GASES
Vs = 45.0451

Mws = 28.8368

ISOKINETIC CALCULATION
An = 3.1863E-04

% ISO = 97.7204

PARTICULATE CONCENTRATION
Cs = 2.2997E-05

Mn 2
Cs = 2.2997E-05
lbs/dscf = 5.0700E-08
grains/dscf = 0.0004
lbs/hr = 0.0022

Initial Leak Check Rate
Finish 4181.927
Start 4181.925
Rate = 0.0020

Pitot Tubes
A = OK
B = OK

Vac. = 20

Final Leak Check Rate
Finish 4279.185
Start 4279.183
Rate = 0.0020

Pitot Tubes
A = OK
B = OK

Vac. = 19.2

American Environmental Testing Company, Inc.
565 South Birch Drive
Spanish Fork, Utah 84660
(801) 266-7111

LABORATORY DATA
EPA Method 5

Company: Chimstar Lime, Bancroft Run Number: Run #2

Sampling Location: RC-303 stack Date: 2/14-93

Moisture Collected

	Initial Weight	Final Weight	Weight Gain
Impinger 1	510.5	506.3	-4.2
Impinger 2	552.2	551.7	-0.5
Impinger 3	458.7	458.6	-0.1
Impinger 4	637.1	649.6	12.5

Total Gain = 7.7 g total

Particulate Collected

Front - Half Analysis (Nozzle, Probe, Filter and Oven Glassware)

1. Filter Final Weight 0.7469
2. Filter Tare Weight 0.7458 CL#8
3. Total Filter Weight 0.0011 = 1.1 mg.
4. Particulate caught in nozzle, probe and glassware 0.9 mg.
5. Total Front - Half Catch 2.0 mg. = total.

Back - Half Analysis (Impingers, and Connecting Glassware)

1. Particulate caught in impingers evaporated down at less than 120° F. 0.5

Total Particulate Catch (Sum of Front and Back - Half Catches)

2.5 mg.

AMERICAN ENVIRONMENTAL TESTING, INCORPORATED
565 So. Birch Drive 801-266-7111
Spanish Fork, Utah 84660

PARTICULATE FIELD DATA FORMAT

1	Plant	Chemstar Lime Plant
2	City	Bancroft, Idaho
3	Location	DC - 303
4	Operator	J.D. Schiller
5	Date	2/14/93
6	Method and Run	EPA 5 - #3 Compliance
7	Stack Diameter (in)	7.75
8	Sample Box Number	CR 1 A
9	Meter Box Number	CR (097)
10	Meter ^H@	2.116
11	Meter Calibration, Y	1.142
12	Pitot Tube, Cp	1
13	Probe Length (ft)	6' - A
14	Probe Liner Material	Stainless Steel
15	Probe Heater Setting (°F)	Ambient
16	Ambient Temperature (°F)	39
17	Barometeric Press., Pb (in Hg)	23.65
18	Assumed Moisture (%)	2
19	Static Pressure, Ps (in H20)	-0.23
20	C Factor	0
21	Reference ^P (in H20)	0.38
22	Nozzle Identification Number	1/4-#3
23	Nozzle Diameter (in)	0.2417
24	Thermometer Number	1-A
25	Pretest Leak Rate (CFM)	0.0020
26	Leak Check Vacuum (in H20)	21.6
27	Filter Number	CL - #9
28	Gas Analysis	
29	CO (%)	0
30	CO2 (%)	0.30
31	O2 (%)	20.85
	N2 (%)	78.85

PRETEST CALCULATIONS

NOZZLE DIAMETER

Dn = 0.2417

constant	0.0357
Qm	0.75
Pb(in HG)	23.65
Pgm(in H2O)	-0.23
Pm	23.6331
Cp	1
Tm(°F)	75
Tm(°R)	535
Bwm	0
Bws	0.02
Ts(°F)	32
Ts(°R)	492
Mds	28.882
Ms	28.6644
Pb(in HG)	23.65
Pgs(in H2O)	-0.23
Ps	23.6331
(^P)avg	0.38

Dn = 0.2165

PRETEST DATA

Cp	1.0000
Imp V(H2O)(ml)	67.5000
Gel H2O(g)	12.0000
V(H2O)(ml)	127.8000
Vm(acf)	49.2300
^h avg	0.2000
Vwc	6.0155
Vmc	43.8674

Bws = 0.1206

ISOKINETIC ^H

^H = 1.1597

constant	849.8000
^H@	1.0000
Mds	28.8820
Mm	28.8820
K	3.0518
^P	0.3800

^H = 1.1597

Sample Point	Meter Temperature Outlet (°F)	Meter Temperature Inlet (°F)	Stack Temp Ts (°F)	Gas Volume Vm (ft3)	Gas Volume difference (ft3)
starting				4279.709	
1	98	95	40	4291.56	11.85
2	98	96	38	4303.54	11.98
3	99	98	39	4316.02	12.48
4	98	97	37	4328.18	12.16
5	97	98	40	4340.72	12.54
6	99	98	40	4352.69	11.97
7	98	99	41	4365.37	12.68
8	99	97	39	4377.554	12.18
avg °F		97.75	39.25		
avg °R		557.75	499.25		
total =				97.8450	97.85
average =	98.25	97.25	39.25		
Sample Point	Meter Temperature Inlet (°F)	Meter Temperature Outlet (°F)	Stack Temp (°F) T	Gas Volume Vm	Gas Volume Vm

Velocity Head ^Ps (in H20)	Pressure Diff ^H (in H20)	Sqrt ^Ps	Sampling Time (min)	Clock Time (24 hrs)	Vacuum (in Hg)
				1530	
0.35	2.31	0.5916	15	1545	3.3
0.37	2.46	0.6083	15	1600	3.5
0.39	2.59	0.6245	15	1615	3.6
0.38	2.53	0.6164	15	1630	3.6
0.39	2.58	0.6245	15	1635	3.6
0.36	2.39	0.6000	15	1650	3.4
0.4	2.65	0.6325	15	1705	3.8
0.38	2.52	0.6164	15	1720	3.7

			120	120	
0.3775	2.5027	0.6143	15	1637.50	3.56
Velocity Head ^Ps	Pressure Diff ^H	Sqrt ^Ps	Sampling Time	Clock Time	Vacuum

Probe Temperature Exit (°F)	Filter Temperature (°F)	Impinger Temperature Outlet (°F)	Vs	Point to Point Isokinetics
42	40	36	43.3148	99.02
41	40	38	44.4460	97.11
41	38	39	45.6772	98.41
40	37	38	44.9973	97.10
39	39	40	45.7229	99.16
39	40	39	43.9292	98.28
38	37	37	46.3517	98.95
37	36	38	45.0878	97.40

39.63	38.38	38.13
Probe Exit Temperature (°F)	Filter Temperature (°F)	Outlet Impinger Temperature (°F)

POST TEST CALCULATION

VOLUME DRY GAS	VOLUME H2O VAPOR	MOISTURE CONTENT
Vm(std) = 87.8457	Vw(std) = 0.2965	Bws = 0.0034

Vm	97.8450	Vic(mls)	6.3
Vm(std) = 87.8457		Vw(std) = 0.2965	

MOL WT DRY STACK GASES	STACK VELOCITY	DRY STACK FLOW RATE
	Vs = 44.9408	
Mds = 28.8820		Q(std) = 4.4125E+04
	Kp 85.49	
MOL WT WET STACK GASES	Vs = 44.9408	
Mws = 28.8454		

ISOKINETIC CALCULATION	PARTICULATE CONCENTRATION
	Cs = 4.4396E-05
An = 3.1863E-04	
	Mn 3.9
% ISO = 98.1822	Cs = 4.4396E-05
	lbs/dscf = 9.7875E-08
	grains/dscf = 0.0007
	lbs/hr = 0.0043

Initial Leak Check Rate

Finish	4279.45	Pitot Tubes
Start	4279.448	A = OK
Rate = 0.0020		B = OK

Vac. = 21.6

Final Leak Check Rate

		Pitot Tubes
Finish	4377.788	A = OK
Start	4377.784	B = OK
Rate = 0.0040		

Vac. = 18.5

American Environmental Testing Company, Inc.
565 South Birch Drive
Spanish Fork, Utah 84660
(801) 266-7111

LABORATORY DATA
EPA Method 5

Company: Chemstar Lime Bancroft Run Number: Run #3

Sampling Location: DC-303 Stack Date: 2/14-93

Moisture Collected

	Initial Weight	Final Weight	Weight Gain
Impinger 1	504.3	501.1	-3.2
Impinger 2	558.6	557.9	-0.7
Impinger 3	462.3	462.5	0.2
Impinger 4	659.1	669.1	10.0

Total Gain = 6.3 g total

Particulate Collected

Front - Half Analysis (Nozzle, Probe, Filter and Oven Glassware)

1. Filter Final Weight 0.7475
2. Filter Tare Weight .7453 CL#9
3. Total Filter Weight 0.0022 = 2.2 mg.
4. Particulate caught in nozzle, probe and glassware 0.7 mg.
5. Total Front - Half Catch 2.9 mg total

Back - Half Analysis (Impingers, and Connecting Glassware)

1. Particulate caught in impingers evaporated down at less than 120° F. 0.8 mg.

Total Particulate Catch (Sum of Front and Back - Half Catches)

4.7 mg.

AMERICAN ENVIRONMENTAL TESTING, INCORPORATED
565 So. Birch Drive 801-266-7111
Spanish Fork, Utah 84660

POST TEST EVAPORATION

COMPANY: Chemstar Lime.
SOURCE: DC-303
DATE: 2/14-93
Bancroft, Idaho.

ACETONE BLANK		WATER BLANK		
Volume of Liquid	from 2/13-93	Volume of Liquid	from 2/12-93	
Final Weight		Final Weight		
Tare Weight		Tare Weight		
Residue	0.0002	Residue	0.0003	

3A X-1

RUN #1		RUN #1		
Volume of Liquid	adj. to 150 mls.	Volume of Liquid	250 mls. adj.	
Color	Clear No visible parts.	Color	Clear opac.	
Final Weight	101.1424	Final Weight	111.9096	
Tare Weight	101.1421	Tare Weight	111.9075	
Residue & Blank	0.0023	Residue & Blank	0.0021	
- Blank	0.0002	- Blank	0.0003	
Residue	0.0021 = 2.1 mg.	Residue	0.0018 mg. = 1.8	

S-4 T-3

RUN #2		RUN #2		
Volume of Liquid	adj. to 150 mls.	Volume of Liquid	adj. to 250 mls.	
Color	Clear NVP	Color	Clear opac.	
Final Weight	106.5564	Final Weight	98.4180	
Tare Weight	106.5553	Tare Weight	98.4172	
Residue & Blank	0.0011	Residue & Blank	0.0008	
- Blank	0.0002	- Blank	0.0003	
Residue	0.0009 = 0.9 mg.	Residue	0.0005 = 0.5 mg.	

B-3 T-4

RUN #3		RUN #3		
Volume of Liquid	adj. to 150 mls.	Volume of Liquid	adj. to 250 mls.	
Color	Clear NVP	Color	Clear - opac.	
Final Weight	114.1903	Final Weight	100.6545	
Tare Weight	114.1894	Tare Weight	100.6534	
Residue & Blank	0.0009	Residue & Blank	0.0011	
- Blank	0.0002	- Blank	0.0003	
Residue	0.0007 = 0.7 mg	Residue	0.0008 = 0.8 mg.	

B-1 X-16

American Environmental
Testing Company, Inc.
565 South Birch Drive
Spanish Fork, Utah 84660
801-266-7111

Chemstar Lime. (Tennile Plant.)
Bancroft, Idaho
2/14/93

ORSAT ANALYSIS

(Ave. of 3 Analyses Each)

TEST NO.	DESCRIPTION	VOLUME PERCENT - DRY			
		NITROGEN	OXYGEN	CARBON DIOXIDE	CARBON MONOXIDE
1	With EPA	78.9	20.8	0.3	<0.1
	Method 5 Test 1	78.8	20.9	0.3	<0.1
		78.9	20.8	0.3	<0.1
	AVERAGE	78.87	20.83	0.3	<0.1

Appendix "D-1"

(Gaseous Emissions Field Data)

American Environmental Testing Company Inc

801-266-7111

15/FEB/93 22 0:40
32 =-.[illegible]5 PPM NOX
26 = .0[illegible]8 PPM CO 28 = .03393 % O2 30 = 0.0437 PPM SO2
15/FEB/93 22 0:24

15/FEB/93 21 59:44
32 =-.29132 PPM NOX
26 = .03016 PPM CO 28 = .03800 % O2 30 = 0.5126 PPM SO2
15/FEB/93 21 59:27

15/FEB/93 21 58:43
32 =-.28048 PPM NOX
26 = .01621 PPM CO 28 = .04986 % O2 30 = 4.8952 PPM SO2 ← Cal.
15/FEB/93 21 58:26

15/FEB/93 21 57:42
32 =-.16821 PPM NOX
26 = .02932 PPM CO 28 = 20.445 % O2 30 = .24155 PPM SO2
15/FEB/93 21 57:26

15/FEB/93 21 56:41
32 =-.25669 PPM NOX
26 = .02933 PPM CO 28 = 20.549 % O2 30 = 2.3117 PPM SO2
15/FEB/93 21 56:44

15/FEB/93 21 55:44
32 =-.26857 PPM NOX
26 = .02931 PPM CO 28 = 20.769 % O2 30 = 1.9644 PPM SO2 ← Cal.
15/FEB/93 21 55:27

15/FEB/93 21 54:43
32 =-.26713 PPM NOX
26 = .02856 PPM CO 28 = 20.770 % O2 30 = 2.5564 PPM SO2
15/FEB/93 21 54:26

15/FEB/93 21 53:42
32 = .50264 PPM NOX
26 = .03546 PPM CO 28 = 20.766 % O2 30 = 1.5682 PPM SO2
15/FEB/93 21 53:26

15/FEB/93 21 52:44
32 = .50268 PPM NOX
26 =-0.4622 PPM CO 28 = 18.975 % O2 30 = 1.8769 PPM SO2
15/FEB/93 21 52:27

15/FEB/93 21 51:43
32 = .86565 PPM NOX
26 =-3.2782 PPM CO 28 = 11.866 % O2 30 =-.01662 PPM SO2
15/FEB/93 21 51:26

MYK 41446 WP

26 =-6.2852 PPM CO 28 = 20.818 % O2 30 = .02991 PPM SO2

15/FEB/93 21:00:24

15/FEB/93 21:49:40 } 28

32 = .62162 PPM NOX

26 =-7.3090 PPM CO 28 = 20.819 % O2 Cal 30 = .01465 PPM SO2

15/FEB/93 21:49:24

15/FEB/93 21:48:45 } 28

32 = .46081 PPM NOX

26 =-4.0889 PPM CO 28 = 20.155 % O2 30 =-9.1565 PPM SO2

15/FEB/93 21:48:28

15/FEB/93 21:47:42

32 = .43384 PPM NOX

26 = 100.22 PPM CO 28 = .03011 % O2 30 =-.01185 PPM SO2

15/FEB/93 21:47:25

15/FEB/93 21:46:42

32 = .45755 PPM NOX

26 = 100.09 PPM CO ← Cal 28 = .03401 % O2 30 =-.01438 PPM SO2

15/FEB/93 21:46:25

15/FEB/93 21:45:41

32 = .46421 PPM NOX

26 = 82.665 PPM CO 28 = .00164 % O2 30 =-.76907 PPM SO2

15/FEB/93 21:45:25

~~15/FEB/93 21:44:41~~ } 28

32 = .0896 PPM NOX

26 = .03356 PPM CO 28 = 20.764 % O2 30 =-.01033 PPM SO2

15/FEB/93 21:44:24

15/FEB/93 21:43:44 } 28

32 = .55012 PPM NOX

26 = 28.319 PPM CO 28 = 20.735 % O2 30 =-.01131 PPM SO2

15/FEB/93 21:43:27

15/FEB/93 21:42:27

15/FEB/93 21:41:43 } 26

32 = .47504 PPM NOX

26 = 664.46 PPM CO ← Cal 28 = .03309 % O2 30 =-.01164 PPM SO2

15/FEB/93 21:41:26

15/FEB/93 21:40:42

-26-

15/FEB/93 22 10:41
32 = 151.25 PPM NOX
26 = .03474 PPM CO 28 = .03795 % O2 30 =-.00393 PPM SO2
15/FEB/93 22 10:24

15/FEB/93 22 9:43
32 = 149.81 PPM NOX
26 = .03248 PPM CO 28 = 11.6015 % O2 30 =-.00345 PPM SO2
15/FEB/93 22 9:26

15/FEB/93 22 8:41
32 = 50.365 PPM NOX ← Cal
26 = .02934 PPM CO 28 = .03101 % O2 30 =-.00391 PPM SO2
15/FEB/93 22 8:25

15/FEB/93 22 7:41
32 = 48.614 PPM NOX
26 = .03860 PPM CO 28 = .03535 % O2 30 =-.00180 PPM SO2
15/FEB/93 22 7:24

15/FEB/93 22 6:41
32 = 44.246 PPM NOX
26 = .02547 PPM CO 28 = .06540 % O2 30 =-.00168 PPM SO2
15/FEB/93 22 6:24

15/FEB/93 22 5:44
32 = .08625 PPM NOX
26 = .03241 PPM CO 28 = 20.427 % O2 30 = .00267 PPM SO2
15/FEB/93 22 5:27

15/FEB/93 22 4:44
32 = .11463 PPM NOX
26 = .03627 PPM CO 28 = 20.409 % O2 30 = .05130 PPM SO2
15/FEB/93 22 4:27

15/FEB/93 22 3:44
32 =-.11224 PPM NOX
26 = .03627 PPM CO 28 = .03244 % O2 30 = 10.783 PPM SO2
15/FEB/93 22 3:27

15/FEB/93 22 2:43
32 =-.10451 PPM NOX
26 = .03661 PPM CO 28 = .04041 % O2 30 = 9.9719 PPM SO2 ← Cal
15/FEB/93 22 2:26

15/FEB/93 22 1:43
32 =-.08502 PPM NOX
26 = .03396 PPM CO 28 = 20.915 % O2 30 = 2.5351 PPM SO2

15/FEB/93 21:39:40
32 = .59426 PPM NOX
26 = 25.355 PPM CO 28 = 21.056 % O2 30 =-.00964 PPM SO2
15/FEB/93 21:39:24

15/FEB/93 21:38:43
32 = .53476 PPM NOX
26 = 24.411 PPM CO 28 = 20.815 % O2 30 =-.01121 PPM SO2
15/FEB/93 21:38:27

15/FEB/93 21:37:42
32 = .46446 PPM NOX
26 = 182.42 PPM CO 28 = 14.151 % O2 30 =-.01408 PPM SO2
15/FEB/93 21:37:25

15/FEB/93 21:36:41
32 = .47740 PPM NOX
26 = 306.26 PPM CO 28 = .02515 % O2 30 =-.01220 PPM SO2
15/FEB/93 21:36:25

15/FEB/93 21:35:41
32 = .48260 PPM NOX
26 = 305.00 PPM CO 28 = .02539 % O2 30 =-.01043 PPM SO2
15/FEB/93 21:35:24

15/FEB/93 21:34:41
32 = .48189 PPM NOX
26 = 305.94 PPM CO 28 = .02547 % O2 30 =-.01308 PPM SO2
15/FEB/93 21:34:24

15/FEB/93 21:33:34
32 = .47762 PPM NOX
26 = 306.49 PPM CO 28 = .02569 % O2 30 =-.01294 PPM SO2
15/FEB/93 21:33:35

15/FEB/93 21:32:41
32 = .48201 PPM NOX
26 = 300.22 PPM CO 28 = .02668 % O2 30 =-.01359 PPM SO2
15/FEB/93 21:32:24

15/FEB/93 21:31:40
32 = .48646 PPM NOX
26 = 298.76 PPM CO 28 = .02628 % O2 30 =-.01189 PPM SO2
15/FEB/93 21:31:24

MYK 414446 WP

15/FEB/93 22:16:41
32 = .10594 PPM NOX
26 = .04500 PPM CO 28 = 20.952 % O2 30 =-.00530 PPM SO2
15/FEB/93 22:16:24

15/FEB/93 22:15:40
32 = .93162 PPM NOX
26 = .03782 PPM CO 28 = 20.909 % O2 30 =-.00575 PPM SO2
15/FEB/93 22:15:24

15/FEB/93 22:14:41
32 = 249.31 PPM NOX Cal
26 = .03766 PPM CO 28 = .02709 % O2 30 =-.00513 PPM SO2
15/FEB/93 22:14:20

15/FEB/93 22:13:41
32 = 252.78 PPM NOX
26 = .04015 PPM CO 28 = .03148 % O2 30 =-.00543 PPM SO2
15/FEB/93 22:13:24

15/FEB/93 22:12:42
32 = 254.88 PPM NOX
26 = .04477 PPM CO 28 = 4.8305 % O2 30 =-.00466 PPM SO2
15/FEB/93 22:12:31

15/FEB/93 22:11:42

26MR... MIN = -2.4093 PPM 2[illegible] = 33.346 % MIN = 18.682 %

15/

32

26 = 15.1[illegible] 28 = 18.687 % O2 30 = .03103 PPM SO2

15/FEB/93 11:46:[illegible]

RECORDER [illegible] LOGGER [illegible] ON 70 60 50 40 30 20 10 0

9021 10 LOGGER 20 30 INTERCEPT 15 0 0 50 60 70 80 90 100

15/FEB/93 [illegible]

15/FEB/93 [illegible]

15/FEB/93 [illegible]

32 0 0 OFF OFF OFF 0 ON 0 OFF V VOLTAG

CHN LEFT [illegible] RIGHT [illegible] DATALOG TREND ASCII LOG ALARM STAT HIGH ALARM STAT UNIT TYPE

CHART PRINT TREND / LOG OPERATION MODE STANDBY ALARM LOG IS OFF MINIMA/MAXIMA YES

32 -10.0 300.0 ON ON OFF 0.0 OFF 0.0 OFF PPM NOX

CHN LEFT MARGIN RIGHT MARGIN DATALOG TREND ASCII LOG ALARM STAT HIGH ALARM STAT UNIT TYPE

CHART PRINT TREND / LOG OPERATION MODE STANDBY ALARM LOG IS OFF MINIMA/MAXIMA YES

RE [illegible]

100 90 80 70 60 50 40 30 20 10 0

0 10 20 30 40 50 60 70 80 90 100

MTK 4:4245 WP

32 = .286[illegible] PPM NOX

26 = 24.2[illegible] PPM CO 28 = 20.864 % O2 30 =-.00462 PPM SO2

15/FEB/93 14:41:20

30MAX = .00333 PPM MIN =-.00574 PPM 32MAX = .81010 PPM MIN = .11296 PPM

26MAX = 81.344 PPM MIN = 11.220 PPM 28MAX = 23.368 % MIN = .02858 %

15/FEB/93 14:41: 1

15/FEB/93 14:40:25 .28

32 = .28151 PPM NOX

26 = 25.481 PPM CO 28 = 20.877 % O2 30 =-.00526 PPM SO2

15/FEB/93 14:40: 9

32 = .28251 PPM NOX

[illegible] = 25.047 PPM CO [illegible] % O2 30 =-.00470 PPM SO2

15/FEB/93 14:39:1[illegible]

[illegible] 93 14:[illegible] .28

RECORDER/DATA LOGGER VRS 5H

[illegible] FEB/93 14:39:15

32 = .28097 PPM NOX

26 = 25.[illegible] PPM CO 28 = 20.893 % O2 30 =-.00482 PPM SO2

19/FEB/93 [illegible] 80 70 60 50 40 30 20 10 0

0 10 20 30 40 50 60 70 80 90 100

RECORDER/DATA LOGGER VRS 5H

26 = 32.565 PPM CO 28 = 18.841 % O2 30 = .01388 PPM SO2

15/FEB/93 11:48:56

15/FEB/93 11:46:14 .28

32 =-.29584 PPM NOX

26 = 33.390 PPM CO 28 = 18.767 % O2 30 = .01215 PPM SO2

15/FEB/93 11:47:56

15/FEB/93 11:47:14 .28

32 =-.68072 PPM NOX

26 = 31.995 PPM CO 28 = 18.722 % O2 30 = .01370 PPM SO2

15/FEB/93 11:46:55

15/FEB/93 11:46:1[illegible] .28

32 =-.67720 PPM NOX

26 = 31.224 PPM CO 28 = 18.719 % O2 30 = .01219 PPM SO2

15/FEB/93 11:45:55

15/FEB/93 11:45:19 .28

32 =-.67231 PPM NOX

26 = 32.963 PPM CO 28 = 18.732 % O2 30 = .01469 PPM SO2

30MAX = [illegible]0455 PPM MIN =-.00686 PPM 32MAX = .28536 PPM MIN = .27436 PPM

26MAX = [illegible]0.220 PPM MIN =19.637 PPM 28MAX = 20.769 % MIN = 20.736 %

15/FEB/93 14:54:15

32 = .27886 PPM NOX

26 = 23.306 PPM CO 28 = 20.709 % O2 30 =-.00457 PPM SO2

15/FEB/93 14:53:59

30MAX = -.00406 PPM MIN =-.00670 PPM 32MAX = .34872 PPM MIN = .25914 PPM

26MAX = 43.551 PPM MIN = 20.280 PPM 28MAX = 20.863 % MIN = 20.729 %

15/FEB/93 14:53:4

15/FEB/93 14:52:57

32 = .28308 PPM NOX

26 = 20.720 PPM CO 28 = 20.740 % O2 30 =-.00532 PPM SO2

15/FEB/93 14:52:40

EB/93 14:52:00

EB/93 14:51:38

32 = .2836 PPM NOX

26 = 22.694 PPM CO 28 = 20.764 % O2 30 =-.00440 PPM SO2

15/FEB/93 14:51:22

32 = .28586 PPM

26 = 20.536 PPM CO 28 = 20.770 % O2 30 =-.00429 PPM SO2

5/FEB/93 14:50:44

15/FEB/93 14:46:37

32 = .28710 PPM NOX

26 = 24.674 PPM CO 28 = 20.835 % O2 30 =-.00551 PPM SO2

15/FEB/93 14:46:20

30MAX = -.00422 PPM MIN =-.00706 PPM 32MAX = .29107 PPM MIN = .27347 PPM

26MAX = 31.223 PPM MIN = 21.143 PPM 28MAX = 20.896 % MIN = 20.821 %

15/FEB/93 14:46:1

15/FEB/93 14:45:21

32 = .27620 PPM NOX

26 = 26.016 PPM CO 28 = 20.869 % O2 30 =-.00608 PPM SO2

15/FEB/93 14:45:5

15/FEB/93 14:43:26

32 = .27709 PPM NOX

26 = 25.841 PPM CO 28 = 20.861 % O2 30 =-.00630 PPM SO2

15/FEB/93 14:43:9

15/FEB/93 14:42:25

32 = .27732 PPM NOX

15/FEB/93 15: 0: 0

15/FEB/93 15: 4:16 28
32 = .28664 PPM NOX
26 = 4.9922 PPM CO 28 = 21.065 % O2 30 =-.00471 PPM SO2
15/FEB/93 15: 4: 0

15/FEB/93 15: 3:16 28
32 = .28724 PPM NOX
26 = 4.5368 PPM CO 28 = 21.066 % O2 30 =-.00596 PPM SO2
15/FEB/93 15: 2:09

15/FEB/93 15: 2:15 28
32 = .28621 PPM NOX
26 = 5.3556 PPM CO 28 = 21.069 % O2 30 =-.00506 PPM SO2
15/FEB/93 15: 1:09

15/FEB/93 15: 1:19 28
32 = .28995 PPM NOX
26 = 4.3603 PPM CO 28 = 20.857 % O2 30 =-.00563 PPM SO2
15/FEB/93 15: 1: 2

15/FEB/93 15: 0:18 28
32 = .28362 PPM NOX
26 = 6.5222 PPM CO 28 = 20.815 % O2 30 =-.00539 PPM SO2
15/FEB/93 15: 0: 2

15/FEB/93 14:59:19 28
32 = .28490 PPM NOX
26 = 6.6456 PPM CO 28 = 20.640 % O2 30 =-.00561 PPM SO2
15/FEB/93 14:59: 1

15/FEB/93 14:58:19 28
32 = .28274 PPM NOX
26 = 6.9091 PPM CO 28 = 20.601 % O2 30 =-.00575 PPM SO2
15/FEB/93 14:58: 6

15/FEB/93 14:57:19 28
32 = .28191 PPM NOX
26 = 1.1099 PPM CO 28 = 20.560 % O2 30 =-.00534 PPM SO2
15/FEB/93 14:57: 9

15/FEB/93 14:56:19 28
32 = .28296 PPM NOX
26 = 26.931 PPM CO 28 = 20.820 % O2 30 =-.00517 PPM SO2
15/FEB/93 14:56:59

15/FEB/93 14:55:19 28
32 = .28133 PPM NOX

15/FEB/93 15:04:35
15/FEB/93 15:04:17

15/FEB/93 15:04: 5
15/FEB/93 15:04: 0

15/FEB/93 15:03:24
15/FEB/93 15:03:18

15/FEB/93 15:03:14

26 = .96737 PPM CO 28 = 20.802 % O2 30 =-.00600 PPM SO2

15/FEB/93 15:12:55

15/FEB/93 15:12:15
32 = .33424 PPM NOx
26 = 1.5161 PPM CO 28 = 20.764 % O2 30 =-.00662 PPM SO2
15/FEB/93 15:11:55

15/FEB/93 15:11:15
32 = .33002 PPM NOx
26 =-.40510 PPM CO 28 = 20.776 % O2 30 =-.00487 PPM SO2
15/FEB/93 15:11: 2

15/FEB/93 15:10:18
32 = .33493 PPM NOx
26 =-3.2566 PPM CO 28 = 20.755 % O2 30 =-.00662 PPM SO2
15/FEB/93 15:10: 2

15/FEB/93 15: 9:18
32 = .34121 PPM NOx
26 =-4.12602 PPM CO 28 = 20.735 % O2 30 =-.00627 PPM SO2
15/FEB/93 15: 9: 1

100 90 80 70 60 50 40 30 20 10 0
58 20 30 40 50 60 70 80 90 100

15/FEB/93 15: 8:18
32 = .34416 PPM NOx
26 =-.50109 PPM CO 28 = 20.710 % O2 30 =-.00484 PPM SO2
15/FEB/93 15: 8: 1

15/FEB/93 15: 7:17
32 = .33146 PPM NOx
26 =-1.5652 PPM CO 28 = 20.811 % O2 30 =-.00574 PPM SO2
15/FEB/93 15: 7: 1

15/FEB/93 15: 6:17
32 = .29645 PPM NOx
26 = 4.2507 PPM CO 28 = 20.793 % O2 30 =-.00494 PPM SO2
15/FEB/93 15: 6: 1

15/FEB/93 16: 10 16

15/FEB/93 16: 4 23

15/FEB/93 16: 9 18

15/FEB/93 16: 8 20

15/FEB/93 16: 8 14

15/FEB/93 16: 1 43

15/FEB/93 16: 1 17

100 90 80 70 60 50 40 30 20 10 0

15/FEB/93 16: 6 33

15/FEB/93 16: 6 20

15/FEB/93 16: 5 41

15/FEB/93 16: 5 16

15/FEB/93 16: 4 20

15/FEB/93 16: 4 15

15/FEB/93 16: 3 33

15/FEB/93 16: 3 23

15/FEB/93 16: 2 30

15/FEB/93 16: 2 15

15/FEB/93 16: 1 22

15/FEB/93 16: 1 16

15/FEB/93 16: 6 32

15/FEB/93 16: 6 26

15/FEB/93 16: 55 44

15/FEB/93 16: 55 16

15/FEB/93 16: 58 21

15/FEB/93 16: 58 15

15/FEB/93 16: 57 29

15/FEB/93 16: 57 14

15/FEB/93 16: 56 30

15/FEB/93 16: 56 20

100 90 80 70 60 50 40 30 20 10 0

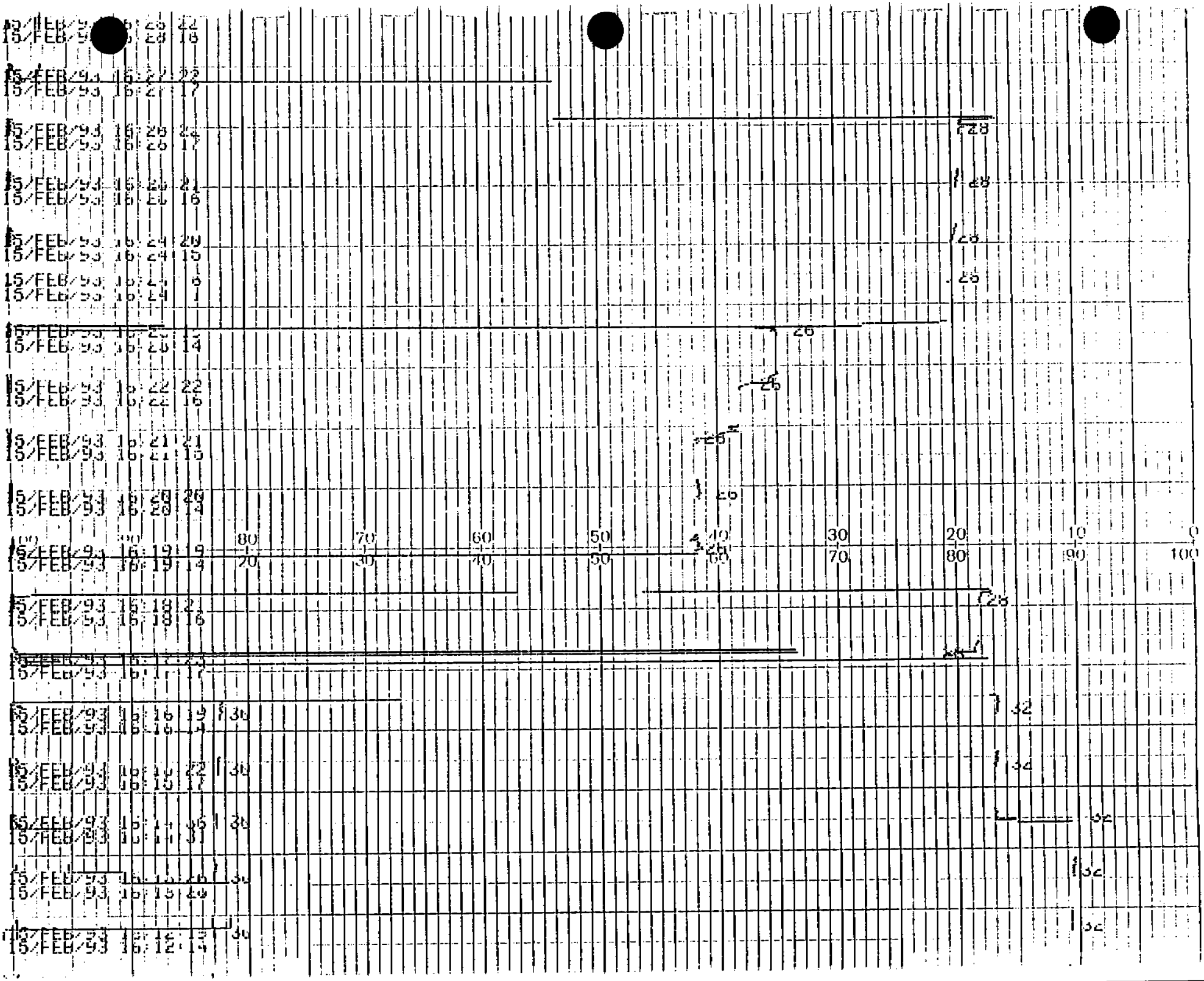
15/FEB/93 16:29 22
15/FEB/93 16:28 18
15/FEB/93 16:27 22
15/FEB/93 16:27 17
15/FEB/93 16:26 22
15/FEB/93 16:26 17
15/FEB/93 16:25 21
15/FEB/93 16:25 16
15/FEB/93 16:24 20
15/FEB/93 16:24 15
15/FEB/93 16:23 6
15/FEB/93 16:23 1
15/FEB/93 16:22 22
15/FEB/93 16:22 14
15/FEB/93 16:22 22
15/FEB/93 16:22 16
15/FEB/93 16:21 21
15/FEB/93 16:21 15
15/FEB/93 16:20 20
15/FEB/93 16:20 14
15/FEB/93 16:19 19
15/FEB/93 16:19 14
15/FEB/93 16:18 21
15/FEB/93 16:18 16
15/FEB/93 16:17 23
15/FEB/93 16:17 17
15/FEB/93 16:16 19
15/FEB/93 16:16 14
15/FEB/93 16:15 22
15/FEB/93 16:15 17
15/FEB/93 16:14 36
15/FEB/93 16:14 31
15/FEB/93 16:13 26
15/FEB/93 16:13 20
15/FEB/93 16:12 13
15/FEB/93 16:12 14
100 90 80 70 60 50 40 30 20 10 0
20 30 40 50 60 70 80 90 100

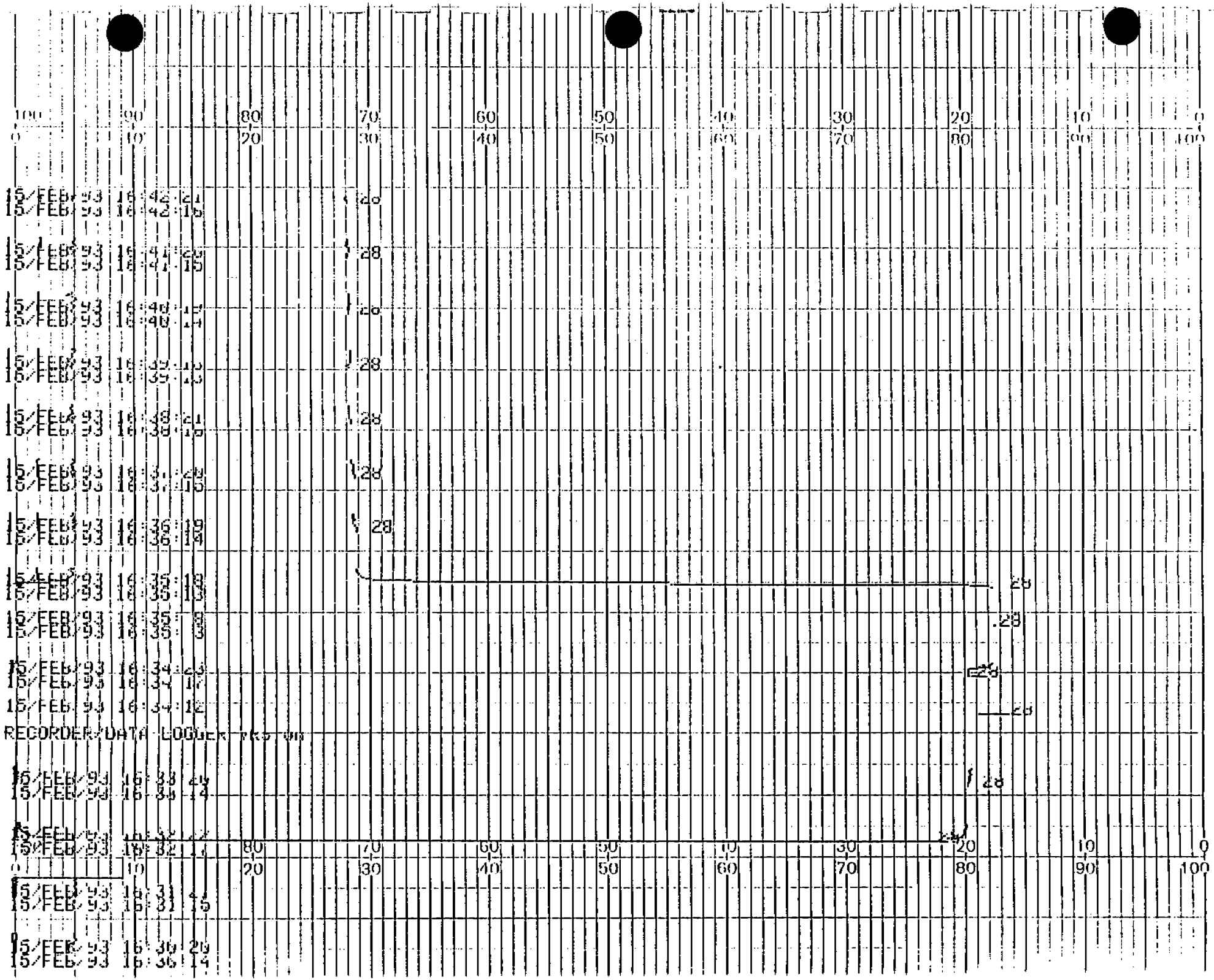
100 90 80 70 60 50 40 30 20 10 0
0 10 20 30 40 50 60 70 80 90 100
15/FEB/93 16:42:21
15/FEB/93 16:42:16
15/FEB/93 16:41:29
15/FEB/93 16:41:15
15/FEB/93 16:40:15
15/FEB/93 16:40:14
15/FEB/93 16:39:15
15/FEB/93 16:39:13
15/FEB/93 16:38:21
15/FEB/93 16:38:16
15/FEB/93 16:37:29
15/FEB/93 16:37:15
15/FEB/93 16:36:19
15/FEB/93 16:36:14
15/FEB/93 16:35:18
15/FEB/93 16:35:13
15/FEB/93 16:35:
15/FEB/93 16:35:
15/FEB/93 16:34:29
15/FEB/93 16:34:17
15/FEB/93 16:34:12
RECORDER/DATA LOGGER TRIGGER
15/FEB/93 16:33:29
15/FEB/93 16:33:14
15/FEB/93 16:32:
15/FEB/93 16:32:
15/FEB/93 16:31:
15/FEB/93 16:31:15
15/FEB/93 16:30:29
15/FEB/93 16:30:14

15/FEB/93 [illegible] 4:0[illegible]

15/FEB/93 17:[illegible]:13 128
32 = 24.663 PPM NOX
26 = 51.662 PPM CO 28 = 7.3299 % O2 30 = .03053 PPM SO2
15/FEB/93 17:1:36

15/FEB/93 17:1:42 128
32 = 23.981 PPM NOX
26 = 46.931 PPM CO 28 = 7.3623 % O2 30 = .06643 PPM SO2
15/FEB/93 17:0:55

15/FEB/93 17:0:12 128
32 = 23.750 PPM NOX
26 = 46.047 PPM CO 28 = 7.3962 % O2 30 = .00957 PPM SO2
15/FEB/93 16:59:55

15/FEB/93 16:59:19 128
32 = 25.358 PPM NOX
26 = 45.813 PPM CO 28 = 7.4360 % O2 30 = .00736 PPM SO2
15/FEB/93 16:58:38

15/FEB/93 16:58:12 128
32 = 15.862 PPM NOX
26 = 49.619 PPM CO 28 = 16.752 % O2 30 = -.00863 PPM SO2
15/FEB/93 16:57:50

15/FEB/93 16:57:19
32 = 16.458 PPM NOX
26 = 47.781 PPM CO 28 = 15.569 % O2 30 = .00198 PPM SO2
15/FEB/93 16:56:53

15/FEB/93 16:56:12 128
32 = 26.426 PPM NOX
26 = 59.048 PPM CO 28 = 7.2496 % O2 30 = .06843 PPM SO2
15/FEB/93 16:55:50

15/FEB/93 16:55:35 128
30MAX = .08085 PPM MIN = .03672 PPM 32MAX = 26.183 PPM MIN = 25.826 PPM
26MAX = 67.676 PPM MIN = 52.460 PPM 28MAX = 7.2694 % MIN = 7.2223 %
15/FEB/93 16:55:16
32 = 26.066 PPM NOX
26 = 56.360 PPM CO 28 = 7.2616 % O2 30 = .04117 PPM SO2
15/FEB/93 16:54:59
15/FEB/93 16:54:50 28

15/FEB/93 16:54:[illegible] 28

26 = 50.1 PPM CO
15/FEB/93 17 12:58

15/FEB/93 17 12
32 = 20.535 PPM NOX
26 = 49.143 PPM CO
15/FEB/93 17 11:56

15/FEB/93 17 11:12
32 = 22.976 PPM NOX
26 = 45.444 PPM CO
15/FEB/93 17 10:55

15/FEB/93 17 10:12
32 = 19.177 PPM NOX
26 = 43.696 PPM CO
15/FEB/93 17 9:54

15/FEB/93 17 9:14
32 = 17.668 PPM NOX
26 = 47.964 PPM CO
15/FEB/93 17 8:58

15/FEB/93 17 8:12
32 = 20.186 PPM NOX
26 = 50.871 PPM CO
15/FEB/93 17 7:55

15/FEB/93 17 7:12
32 = .64529 PPM NOX
26 = 3.6249 PPM CO
15/FEB/93 17 6:55

15/FEB/93 17 6:12
32 = 24.558 PPM NOX
26 = 51.712 PPM CO
15/FEB/93 17 5:55

15/FEB/93 17 5:13
32 = 1.0184 PPM NOX
26 = 8.1150 PPM CO
15/FEB/93 17 4:57

15/FEB/93 17 4:14
32 = 24.019 PPM NOX
26 = 49.171 PPM CO
15/FEB/93 17 3:5

2o = 7.9493 % O2
3o = .04911 PPM SO2

2o
2o = 7.4866 % O2
3o = .04779 PPM SO2

2o
2o = 7.5577 % O2
3o = .00389 PPM SO2

2o
2o = 17.080 % O2
3o = .01209 PPM SO2

2o
2o = 15.855 % O2
3o = .01726 PPM SO2

2o
2o = 7.6339 % O2
3o = .04105 PPM SO2

2o
2o = 20.873 % O2
3o = -.05624 PPM SO2

2o
2o = 7.3950 % O2
3o = .05905 PPM SO2

2o
2o = 10.507 % O2
3o = .03287 PPM SO2

2o
2o = 7.2450 % O2
3o = .03457 PPM SO2

15/FEB/93 [illegible] 23:14
32 = 21.[illegible] PPM NOX
26 = 3.8095 PPM CO 28 = 20.670 % O2 30 = .02309 PPM SO2
15/FEB/93 1[illegible] 22:57

15/FEB/93 1[illegible] 22:15 128
32 = 15.312 PPM NOX
26 = 4.9057 PPM CO 28 = 20.691 % O2 30 = .03736 PPM SO2
15/FEB/93 1[illegible] 21:57

15/FEB/93 1[illegible] 21:13 128
32 = 19.742 PPM NOX
26 = 5.2866 PPM CO 28 = 20.695 % O2 30 = .04839 PPM SO2
15/FEB/93 1[illegible] 20:56

100 80 70 60 50 40 30 20 10 0
0 20 30 40 50 60 70 80 90 100

15/FEB/93 1[illegible] 20:12 128
32 = 23.613 PPM NOX
26 = 4.8955 PPM CO 28 = 20.685 % O2 30 = .04074 PPM SO2
15/FEB/93 1[illegible] 19:[illegible]

15/FEB/93 1[illegible] 18:12 128
32 = 22.615 PPM NOX
26 = 5.[illegible]249 PPM CO 28 = 20.676 % O2 30 = .06661 PPM SO2
15/FEB/93 1[illegible] 18:[illegible]

15/FEB/93 1[illegible] 16:16 128
32 = 21.[illegible]34 PPM NOX
26 = 1.3516 PPM CO 28 = 20.666 % O2 30 = .05703 PPM SO2
15/FEB/93 1[illegible] 16:[illegible]

15/FEB/93 1[illegible] 16:14 128
32 = 19.592 PPM NOX
26 = 1.2962 PPM CO 28 = 20.616 % O2 30 = .03972 PPM SO2
15/FEB/93 1[illegible] 16:[illegible]

15/FEB/93 1[illegible] 16:14 128
32 = 18.574 PPM NOX
26 = 4.2474 PPM CO 28 = 20.455 % O2 30 = .00961 PPM SO2
15/FEB/93 1[illegible] 15:57

15/FEB/93 1[illegible] 15:14 128
32 = 24.365 PPM NOX
26 = 47.251 PPM CO 28 = 7.3862 % O2 30 = .10989 PPM SO2
15/FEB/93 1[illegible] 14:57

15/FEB/93 1[illegible] 14:13 128
32 = 28.507 PPM NOX
26 = 56.626 PPM CO 28 = [illegible].4143 % O2 30 = .06042 PPM SO2

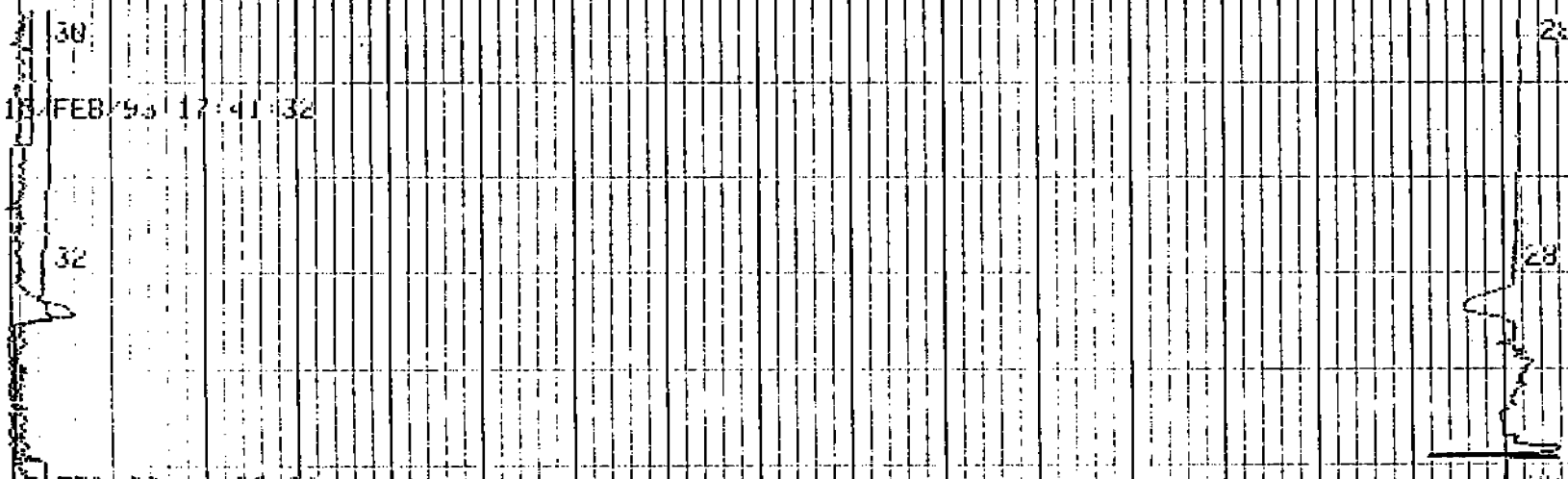
30
28
16/FEB/93 17:41:32
32
28
28
16/FEB/93 17:29:22
30MAX = 1.1556 PPM MIN = .01765 PPM
32MAX = 24.742 PPM MIN = 19.287 PPM
26MAX = 1.072 PPM MIN = 10.611 PPM
28MAX = 19.679 % MIN = 7.4479 %
15/FEB/93 17:29:3
15/FEB/93 17:28:42
28
100 90 80 70 60 50 40 30 20 10 0
15/FEB/93 17:26:3
15/FEB/93 17:26:37
20 30 40 50 60 70 80 90 100
15/FEB/93 17:26:5
28
15/FEB/93 17:26:4
15/FEB/93 17:25:42
28
30MAX = 1.3026 PPM MIN =-.05783 PPM
32MAX = 31.453 PPM MIN =-23.351 PPM
26MAX = 81.197 PPM MIN =-4.0862 PPM
28MAX = 20.893 % MIN =-3.8444 %
15/FEB/93 17:25:14
32 = 23.514 PPM NOX
26 = 62.463 PPM CO
28 = 7.6667 % O2
30 = .05276 PPM SO2
15/FEB/93 17:24:58
15/FEB/93 17:24:14
28
32 = 23.614 PPM NOX

15/FEB/93 19:37:32
32 = 23.911 PPM NOX
26 = 76.762 PPM CO
15/FEB/93 19:37:16

15/FEB/93 19:36:33
32 = 31.566 PPM NOX
28 = 94.286 PPM CO
15/FEB/93 19:36:16

15/FEB/93 19:33:32
32 = 16.376 PPM NOX
26 = 70.638 PPM CO
15/FEB/93 19:33:16

15/FEB/93 19:34:33
32 = 26.329 PPM NOX
26 = 78.990 PPM CO
15/FEB/93 19:34:16

15/FEB/93 19:33:33
32 = 25.916 PPM NOX
26 = 76.990 PPM CO
15/FEB/93 19:33:16

15/FEB/93 19:32:32
32 = 25.797 PPM NOX
26 = 76.650 PPM CO
15/FEB/93 19:32:15

15/FEB/93 19:31:32
32 = 25.453 PPM NOX
26 = 75.643 PPM CO
15/FEB/93 19:31:15

15/FEB/93 19:30:32
32 = 25.172 PPM NOX
26 = 74.751 PPM CO
15/FEB/93 19:30:22

30MAX = 17882 PPM MIN =-.05751 PPM 32MAX = 30.446 PPM MIN =-3.6505 PPM
26MAX = 107.15 PPM MIN =-4.1863 PPM 28MAX = 23.139 % MIN =-4.4136 %

15/FEB/93 19:30:3

15/FEB/93 19:29:32
32 = 24.66610 PPM NOX
26 = 72.462 PPM CO
15/FEB/93 19:29:15

30MAX = [illegible]611 PPM MIN = .06640 PPM 32MA[illegible] 11.012 PPM MIN = .11319 PPM
26MAX = [illegible] PPM MIN = 11.242 PPM 28MAX = 10.023 % MIN = .02663 %
15/FEB/93 19:47:1[illegible]

15/FEB/93 19:46:34 28
32 = 27.634 PPM NOX
26 = 81.979 PPM CO 28 = 7.3606 % O2 30 = .09360 PPM SO2
15/FEB/93 19:46:10
15/FEB/93 19:46:02 28
RECORDER/DATA LOGGER VRS 04
15/FEB/93 19:40:0[illegible] 28

15/FEB/93 19:44:31 28
32 = 26.446 PPM NOX
26 = 76.169 PPM CO 28 = 7.3761 % O2 30 = .09631 PPM SO2
15/FEB/93 19:44:10

15/FEB/93 19:43:34 28
32 = 26.249 PPM NOX
26 = 75.416 PPM CO 28 = 7.3709 % O2 30 = .12664 PPM SO2
15/FEB/93 19:43:10
80 70 60 50 40 30 20 10 0
0 10 20 30 40 50 60 70 80 90 100
15/FEB/93 19:42:33 28
32 = 25.767 PPM NOX
26 = 75.312 PPM CO 28 = 7.3970 % O2 30 = .10447 PPM SO2
15/FEB/93 19:42:17

15/FEB/93 19:41:32 28
32 = 25.467 PPM NOX
26 = 76.125 PPM CO 28 = 7.3910 % O2 30 = .10104 PPM SO2
15/FEB/93 19:41:16

15/FEB/93 19:40:31 28
32 = 24.738 PPM NOX
26 = 75.055 PPM CO 28 = 7.4151 % O2 30 = .12083 PPM SO2
15/FEB/93 19:40:10

15/FEB/93 19:39:34 28
32 = 24.451 PPM NOX
26 = 75.174 PPM CO 28 = 7.4320 % O2 30 = .08819 PPM SO2
15/FEB/93 19:39:18

15/FEB/93 19:38:33 28
[illegible]

5 = 79.541 PPM CO 28 = 7.3541 % O2 30 = .09815 PPM SO2

5/FEB/93 19:56:16

80 70 60 50 40 30 20 10 0

1/FEB/93 19:55:32 20 30 40 50 60 70 80 90 100

2 = 26.736 PPM NOX 28

5 = 75.116 PPM CO 28 = 7.4061 % O2 30 = .09534 PPM SO2

5/FEB/93 19:55:46

1/FEB/93 19:55:32

2 = 26.393 PPM NOX 128

5 = 76.673 PPM CO 28 = 7.3769 % O2 30 = .10523 PPM SO2

5/FEB/93 19:55:16

1/FEB/93 19:54:31

2 = 25.979 PPM NOX 128

5 = 76.652 PPM CO 28 = 7.3980 % O2 30 = .09302 PPM SO2

5/FEB/93 19:54:14

1/FEB/93 19:53:58

2 = 25.555 PPM NOX 128

5 = 74.871 PPM CO 28 = 7.3929 % O2 30 = .11324 PPM SO2

5/FEB/93 19:53:14

1/FEB/93 19:52:30

2 = 25.132 PPM NOX 128

5 = 75.195 PPM CO 28 = 7.4160 % O2 30 = .08853 PPM SO2

5/FEB/93 19:52:13

1/FEB/93 19:51:29

2 = 25.610 PPM NOX 128

5 = 73.275 PPM CO 28 = 7.4319 % O2 30 = .08672 PPM SO2

5/FEB/93 19:51:14

1/FEB/93 19:50:33

2 = 24.877 PPM NOX 128

5 = 75.597 PPM CO 28 = 7.5324 % O2 30 = .10150 PPM SO2

5/FEB/93 19:50:15

1/FEB/93 19:49:32 80 70 60 50 40 30 20 10 0

2 = 24.209 PPM NOX 10 20 30 40 50 60 70 80 90 100

5 = 73.735 PPM CO 28 = 7.5912 % O2 30 = .08873 PPM SO2

5/FEB/93 19:49:15

1/FEB/93 19:48:33 28

2 = 30.937 PPM NOX

5 = 8.852 PPM CO 28 = 1.8840 % O2 30 = .04859 PPM SO2

5/FEB/93 19:48:16

2 = 26.215 PPM NOX
6 = 74.054 PPM CO
5/FEB/93 20: 7:15

28 = 7.3546 % O2
30 = .05979 PPM SO2

5/FEB/93 20: 6:31
2 = 26.004 PPM NOX
6 = 72.010 PPM CO
5/FEB/93 20: 6:14

28 = 7.3761 % O2
30 = .09573 PPM SO2

5/FEB/93 20: 5:30
2 = 25.524 PPM NOX
6 = 72.453 PPM CO
5/FEB/93 20: 5:14

28 = 7.3827 % O2
30 = .11678 PPM SO2

5/FEB/93 20: 4:30
2 = 25.194 PPM NOX
6 = 76.330 PPM CO
5/FEB/93 20: 4:15

28 = 7.4137 % O2
30 = .06242 PPM SO2

5/FEB/93 20: 3:29
2 = 24.895 PPM NOX
6 = 74.166 PPM CO
5/FEB/93 20: 3:13

28 = 7.4151 % O2
30 = .07355 PPM SO2

5/FEB/93 20: 2:30
2 = 24.666 PPM NOX
6 = 75.443 PPM CO
5/FEB/93 20: 2:15

28 = 7.4825 % O2
30 = .09662 PPM SO2

5/FEB/93 20: 1:32
2 = 24.675 PPM NOX
6 = 76.562 PPM CO
5/FEB/93 20: 1:15

28 = 7.5507 % O2
30 = .08684 PPM SO2

5/FEB/93 20: 0:33
2 = 15.042 PPM NOX
6 = 85.362 PPM CO
5/FEB/93 20: 0:16

28 = 16.985 % O2
30 = .08191 PPM SO2

5/FEB/93 19:59:32
2 = 17.593 PPM NOX
6 = 83.287 PPM CO
5/FEB/93 19:59:16

28 = 16.861 % O2
30 = .08948 PPM SO2

5/FEB/93 19:58:29
2 = 27.399 PPM NOX
6 = 84.405 PPM CO
5/FEB/93 19:58:17

28 = 7.3316 % O2
30 = .14463 PPM SO2

26 = 91.95 PPM CO 2a = 7.4616 % O2 3a = .07171 PPM SO2

15/FEB/93 20:16:10

15/FEB/93 20:16:12 28

RECORDER/DATA LOGGER V&S 5A

15/FEB/93 20:15:31 28

32 = 25.329 PPM NOX

26 = 84.909 PPM CO 2a = 7.4756 % O2 3a = .08239 PPM SO2

15/FEB/93 20:15:14

15/FEB/93 20:14:31 28

32 = 24.973 PPM NOX

26 = 89.016 PPM CO 2a = 7.5359 % O2 3a = .08246 PPM SO2

15/FEB/93 20:14:14

15/FEB/93 20:13:33 28

32 = 23.659 PPM NOX

26 = 89.895 PPM CO 2a = 8.4863 % O2 3a = .05221 PPM SO2

15/FEB/93 20:13:16

15/FEB/93 20:12:36 28

32 = 14.542 PPM NOX

26 = 55.000 PPM CO 2a = 16.128 % O2 3a = .00960 PPM SO2

15/FEB/93 20:12:14

15/FEB/93 20:11:33 28

32 = 18.513 PPM NOX

26 = 63.439 PPM CO 2a = 14.998 % O2 3a = .06563 PPM SO2

15/FEB/93 20:11:16

15/FEB/93 20:10:31 28

32 = 26.846 PPM NOX

26 = 78.342 PPM CO 2a = 7.3237 % O2 3a = .09268 PPM SO2

15/FEB/93 20:10:14

15/FEB/93 20:9:36 28

32 = 25.753 PPM NOX

26 = 76.046 PPM CO 2a = 7.3260 % O2 3a = .08750 PPM SO2

15/FEB/93 20:9:20

32MAX = 33.442 PPM MIN = .00639 PPM 3aMAX = 78.896 PPM MIN = .11295 PPM

26MAX = 93.523 PPM MIN = 11.123 PPM 2aMAX = 18.017 % MIN = .02882 %

15/FEB/93 20:9:3

15/FEB/93 20:8:34 28

32 = 26.544 PPM NOX

26 = 71.841 PPM CO 2a = 7.8667 % O2 3a = .10341 PPM SO2

15/FEB/93 20:8:18

15/FEB/93 20:23:15

15/FEB/93 20:23:31
32 = 23.830 PPM NOX
26 = 75.655 PPM CO
28 = 9.5642 % O2
30 = .10712 PPM SO2
15/FEB/93 20:23:15

15/FEB/93 20:24:33
32 = 14.974 PPM NOX
26 = 86.498 PPM CO
28 = 16.745 % O2
30 = .03950 PPM SO2
15/FEB/93 20:24:15

100 90 80 70 60 50 40 30 20 10 0

15/FEB/93 20:24:31
32 = 18.123 PPM NOX
26 = 88.518 PPM CO
28 = 14.190 % O2
30 = .08110 PPM SO2
15/FEB/93 20:23:15

15/FEB/93 20:22:30
32 = 27.016 PPM NOX
26 = 86.649 PPM CO
28 = 7.8676 % O2
30 = .13171 PPM SO2
15/FEB/93 20:22:15

15/FEB/93 20:21:30
32 = 26.179 PPM NOX
26 = 90.424 PPM CO
28 = 7.8667 % O2
30 = .09564 PPM SO2
15/FEB/93 20:21:15

15/FEB/93 20:20:32
32 = 26.001 PPM NOX
26 = 80.637 PPM CO
28 = 7.8645 % O2
30 = .08283 PPM SO2
15/FEB/93 20:20:15

15/FEB/93 20:19:32
32 = 26.051 PPM NOX
26 = 87.347 PPM CO
28 = 7.8684 % O2
30 = .09613 PPM SO2
15/FEB/93 20:19:15

15/FEB/93 20:18:32
32 = 26.534 PPM NOX
26 = 91.056 PPM CO
28 = 7.8762 % O2
30 = .09441 PPM SO2
15/FEB/93 20:18:14

15/FEB/93 20:17:38
32 = 26.142 PPM NOX
26 = 86.419 PPM CO
28 = 7.8962 % O2
30 = .09023 PPM SO2
15/FEB/93 20:17:24

32MAX = .39613 PPM MIN = .06635 PPM 32MAX = 70.549 PPM MIN = .11296 PPM
26MAX = 97.198 PPM MIN = 71.219 PPM 28MAX = 18.042 % MIN = .02858 %

15/FEB/93 20:31
32 = 28.830 PPM NOX
26 = 75.655 PPM CO
28 = 9.5642 % O2
30 = .10712 PPM SO2
15/FEB/93 20:25:15

15/FEB/93 20:24:33
32 = 14.974 PPM NOX
26 = 86.498 PPM CO
28 = 16.745 % O2
30 = .03950 PPM SO2
15/FEB/93 20:24:16

15/FEB/93 20:23:31
32 = 18.123 PPM NOX
26 = 88.518 PPM CO
28 = 14.190 % O2
30 = .08110 PPM SO2
15/FEB/93 20:23:19

15/FEB/93 20:22:30
32 = 27.016 PPM NOX
26 = 86.649 PPM CO
28 = 7.3675 % O2
30 = .13171 PPM SO2
15/FEB/93 20:22:13

15/FEB/93 20:21:33
32 = 26.779 PPM NOX
26 = 90.424 PPM CO
28 = 7.3667 % O2
30 = .09564 PPM SO2
15/FEB/93 20:21:16

15/FEB/93 20:20:32
32 = 26.561 PPM NOX
26 = 88.637 PPM CO
28 = 7.3645 % O2
30 = .08283 PPM SO2
15/FEB/93 20:20:15

15/FEB/93 20:19:38
32 = 26.051 PPM NOX
26 = 87.547 PPM CO
28 = 7.3664 % O2
30 = .09613 PPM SO2
15/FEB/93 20:19:15

15/FEB/93 20:18:41
32 = 25.534 PPM NOX
26 = 91.056 PPM CO
28 = 7.3765 % O2
30 = .09441 PPM SO2
15/FEB/93 20:18:14

15/FEB/93 20:17:38
32 = 25.142 PPM NOX
26 = 86.415 PPM CO
28 = 7.3962 % O2
30 = .09023 PPM SO2
15/FEB/93 20:17:21

30MAX = .39613 PPM MIN = .00635 PPM 32MAX = 70.549 PPM MIN = .11296 PPM
26MAX = 91.198 PPM MIN = 71.215 PPM 28MAX = 19.042 % MIN = .02853 %

26 = 68.246 PPM CO 28 = 16.660 % O2 30 = .07155 PPM SO2

15/FEB/93 20:34:13

15/FEB/93 20:35:31

32 = 25.287 PPM NOX

26 = 71.176 PPM CO 28 = 8.8643 % O2 30 = .09299 PPM SO2

15/FEB/93 20:35:14

15/FEB/93 20:34:30

32 = 27.661 PPM NOX

26 = 76.676 PPM CO 28 = 7.4042 % O2 30 = .08000 PPM SO2

15/FEB/93 20:34:13

15/FEB/93 20:34:29

32 = 26.926 PPM NOX

26 = 74.612 PPM CO 28 = 7.4197 % O2 30 = .08584 PPM SO2

15/FEB/93 20:34:13

15/FEB/93 20:34:33

32 = 26.666 PPM NOX

26 = 71.266 PPM CO 28 = 7.4760 % O2 30 = .12206 PPM SO2

15/FEB/93 20:34:10

15/FEB/93 20:31:32

32 = 26.170 PPM NOX

26 = 80.728 PPM CO 28 = 7.4376 % O2 30 = .08816 PPM SO2

15/FEB/93 20:31:16

80 70 60 50 40 30 20 10 0

20 30 40 50 60 70 80 90 100

15/FEB/93 20:30:32

32 = 26.814 PPM NOX

26 = 69.438 PPM CO 28 = 7.4130 % O2 30 = .06916 PPM SO2

15/FEB/93 20:30:15

15/FEB/93 20:29:31

32 = 26.715 PPM NOX

26 = 71.965 PPM CO 28 = 7.4665 % O2 30 = .10561 PPM SO2

15/FEB/93 20:29:15

15/FEB/93 20:28:31

32 = 26.385 PPM NOX

26 = 71.294 PPM CO 28 = 7.4706 % O2 30 = .10372 PPM SO2

15/FEB/93 20:28:14

15/FEB/93 20:27:30

32 = 26.190 PPM NOX

26 = 73.268 PPM CO 28 = 7.5835 % O2 30 = .09604 PPM SO2

15/FEB/93 20:27:13

3/FEB/93 20:40:31				
5 = 71.722 PPM CO	2σ = 7.9415 %	O2	3σ = .09659 PPM	SO2
5/FEB/93 20:44:30				
2 = 25.745 PPM NOX				
5 = 75.062 PPM CO	2σ = 7.4699 %	O2	3σ = .08853 PPM	SO2
5/FEB/93 20:41:13				
1/FEB/93 20:43:29				
2 = 25.319 PPM NOX				
5 = 71.267 PPM CO	2σ = 7.5021 %	O2	3σ = .10780 PPM	SO2
5/FEB/93 20:43:13				
1/FEB/93 20:42:33				
2 = 25.235 PPM NOX				
5 = 75.128 PPM CO	2σ = 7.4945 %	O2	3σ = .08989 PPM	SO2
5/FEB/93 20:42:16				
1/FEB/93 20:42:32				
2 = 25.072 PPM NOX				
5 = 75.535 PPM CO	2σ = 7.5114 %	O2	3σ = .07608 PPM	SO2
5/FEB/93 20:42:15				
1/FEB/93 20:40:34				
2 = 24.935 PPM NOX				
5 = 69.306 PPM CO	2σ = 7.5266 %	O2	3σ = .04929 PPM	SO2
5/FEB/93 20:40:10				
1/FEB/93 20:39:31				
2 = 24.853 PPM NOX				
5 = 69.046 PPM CO	2σ = 7.5301 %	O2	3σ = .07588 PPM	SO2
5/FEB/93 20:39:14				
1/FEB/93 20:38:30				
2 = 24.541 PPM NOX				
5 = 75.784 PPM CO	2σ = 7.5904 %	O2	3σ = .03941 PPM	SO2
5/FEB/93 20:38:13				
1/FEB/93 20:37:31				
2 = 24.589 PPM NOX				
5 = 91.790 PPM CO	2σ = 14.917 %	O2	3σ = .05528 PPM	SO2

FEB 93 20 40 31						3σ = .10943	PPM SO2
= [illegible] PPM CO		2σ = [illegible] %	O2			3σ = .09659	PPM SO2
FEB 93 20 44 30							
= 25.743 PPM NOX							
= 76.062 PPM CO		2σ = 7.4695 %	O2			3σ = .06853	PPM SO2
FEB 93 20 41 13							
FEB 93 20 43 29							
= 25.019 PPM NOX							
= 71.267 PPM CO		2σ = 7.5021 %	O2			3σ = .10780	PPM SO2
FEB 93 20 43 15							
FEB 93 20 42 33							
= 25.235 PPM NOX							
= 75.128 PPM CO		2σ = 7.4945 %	O2			3σ = .08989	PPM SO2
FEB 93 20 42 16							
FEB 93 20 41 32							
= 25.072 PPM NOX							
= 78.635 PPM CO		2σ = 7.5119 %	O2			3σ = .07600	PPM SO2
FEB 93 20 41 15							
FEB 93 20 40 44							
= 24.915 PPM NOX							
= 65.306 PPM CO		2σ = 7.5205 %	O2			3σ = .04729	PPM SO2
FEB 93 20 40 14							
FEB 93 20 39 31							
= 24.853 PPM NOX							
= 69.046 PPM CO		2σ = 7.5301 %	O2			3σ = .07588	PPM SO2
FEB 93 20 39 14							
FEB 93 20 38 30							
= 24.541 PPM NOX							
= 75.784 PPM CO		2σ = 7.5904 %	O2			3σ = .03941	PPM SO2
FEB 93 20 38 13							
FEB 93 20 37 31							
= 24.569 PPM NOX							
= 91.790 PPM CO						3σ = .0[illegible]	SO2

6 = 74.373 PPM CO 2σ = 7.4755 % O2 3σ = .09273 PPM SO2
5/FEB/93 20:55:19

5/FEB/93 20:54:33
2 = 26.442 PPM NOx 1σ
6 = 72.123 PPM CO 2σ = 7.4901 % O2 3σ = .09601 PPM SO2
5/FEB/93 20:54:16

5/FEB/93 20:54:32
2 = 26.816 PPM NOx 1σ
6 = 74.927 PPM CO 2σ = 7.5867 % O2 3σ = .10017 PPM SO2
5/FEB/93 20:54:15

5/FEB/93 20:53:31
2 = 26.583 PPM NOx 1σ
6 = 76.723 PPM CO 2σ = 7.4787 % O2 3σ = .06388 PPM SO2
5/FEB/93 20:53:15

5/FEB/93 20:52:31
2 = 26.259 PPM NOx 1σ
6 = 71.523 PPM CO 2σ = 7.6146 % O2 3σ = .09342 PPM SO2
5/FEB/93 20:52:14

5/FEB/93 20:51:30
2 = 24.967 PPM NOx 1σ
6 = 76.465 PPM CO 2σ = 7.5562 % O2 3σ = .08694 PPM SO2
5/FEB/93 20:51:14

5/FEB/93 20:50:30
2 = 24.539 PPM NOx 1σ
6 = 74.751 PPM CO 2σ = 7.6953 % O2 3σ = .06622 PPM SO2
5/FEB/93 20:50:13

5/FEB/93 20:49:30
2 = 32.188 PPM NOx 2σ
6 = 163.75 PPM CO 2σ = 17.725 % O2 3σ = .03219 PPM SO2
5/FEB/93 20:49:14

2σ

5/FEB/93 20:48:30
6 = 45.110 PPM CO 2σ = 16.125 % O2 3σ = .06032 PPM SO2

5/FEB/93 20:47:39
2 = 26.397 PPM NOx 2σ
6 = 75.703 PPM CO 2σ = 7.66 % 3σ = .10720 PPM SO2

32 = 24.77[illegible] PPM NOX

26 = 73.718 PPM CO 28 = 7.9745 % O2 30 = .07847 PPM SO2

15/FEB/93 21 6 15

15/FEB/93 21 5 31 28

32 = 24.410 PPM NOX

26 = 73.322 PPM CO 28 = 7.5156 % O2 30 = .10433 PPM SO2

15/FEB/93 21 5 15

15/FEB/93 21 4 31 28

32 = 24.126 PPM NOX

26 = 71.652 PPM CO 28 = 7.5331 % O2 30 = .07187 PPM SO2

15/FEB/93 21 4 14

15/FEB/93 21 3 30 28

32 = 23.988 PPM NOX

26 = 73.471 PPM CO 28 = 7.5612 % O2 30 = .09897 PPM SO2

15/FEB/93 21 3 14

15/FEB/93 21 2 30 28

32 = 23.886 PPM NOX

26 = 72.826 PPM CO 28 = 7.5971 % O2 30 = .09489 PPM SO2

15/FEB/93 21 2 14

28

26 30 = .02538 PPM SO2

15/F

32 =

26 =

15/FEB/93 21 0 13 28 = 10.212 % O2 30 = .00556 PPM SO2

16/FEB/93 20 59 31

26 =

15/F

30 = .09242 PPM SO2

13/FEB/93 20 54 30

32 = 27.240 PPM NOX

26 = 78.354 PPM CO 28 = 7.4[illegible]5 % O2 30 = .09161 PPM SO2

15/FEB/93 20 53 14

13/FEB/93 20 57 30 28

32 = 27.039 PPM NOX

26 = 76.010 PPM CO 28 = 7.4977 % O2 30 = .10420 PPM SO2

15/FEB/93 21:16:30
32 = .52125 PPM NOX
26 = 27.255 PPM CO 28 = 20.557 % O2 30 = .01098 PPM SO2
15/FEB/93 21:16:13

15/FEB/93 21:15:33
32 = .69281 PPM NOX
26 = 27.272 PPM CO 28 = 20.884 % O2 30 = .00571 PPM SO2
15/FEB/93 21:15:16

15/FEB/93 21:14:53
32 = .73217 PPM NOX
26 = 38.759 PPM CO 28 = 18.09 % O2 30 = .00722 PPM SO2
15/FEB/93 21:14:16

15/FEB/93 21:13:33
32 = 14.236 PPM NOX
26 = 69.579 PPM CO 28 = 16.590 % O2 30 = .03100 PPM SO2
15/FEB/93 21:13:13

15/FEB/93 21:12:33
32 = 16.967 PPM NOX
26 = 68.521 PPM CO 28 = 16.226 % O2 30 = .06760 PPM SO2
15/FEB/93 21:12:16

15/FEB/93 21:11:30
32 = 26.59 PPM NOX
26 = 74.353 PPM CO 28 = 7.4291 % O2 30 = .06696 PPM SO2
15/FEB/93 21:11:14

15/FEB/93 21:10:30
32 = 26.291 PPM NOX
26 = 74.049 PPM CO 28 = 7.4259 % O2 30 = .08216 PPM SO2
15/FEB/93 21:10:13

15/FEB/93 21:9:29
32 = 25.969 PPM NOX
26 = 75.569 PPM CO 28 = 7.4496 % O2 30 = .09318 PPM SO2
15/FEB/93 21:9:13

15/FEB/93 21:8:33
32 = 25.699 PPM NOX
26 = 75.381 PPM CO 28 = 7.4572 % O2 30 = .07923 PPM SO2
15/FEB/93 21:8:16

15/FEB/93 21:7:32
32 = 25.221 PPM NOX

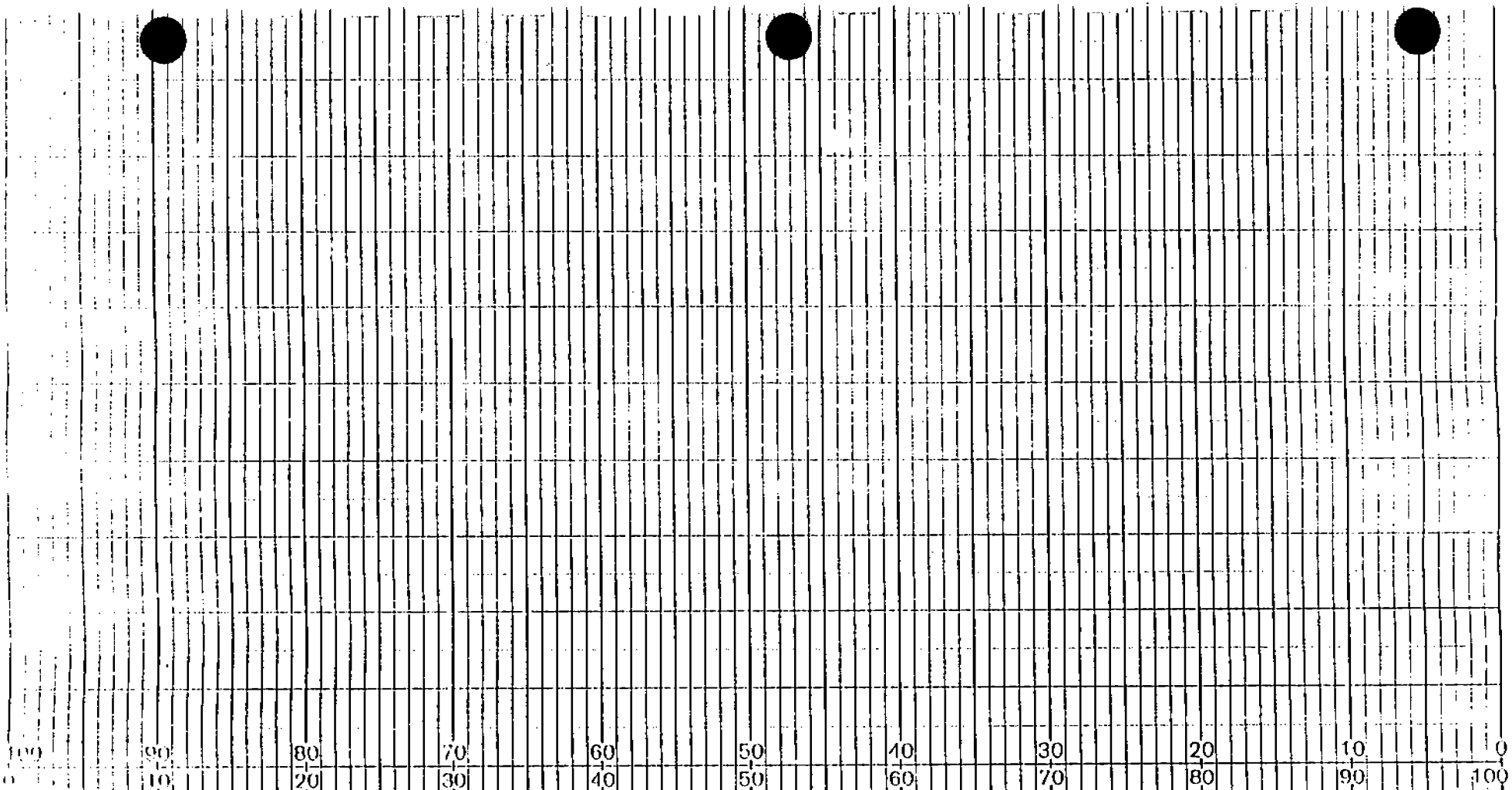

END OF TEST CALIBSTAR

26 = 26.975 PPM CO 28 = 20.571 % O2 30 =-.02827 PPM SO2

15/FEB/93 21:16:13

15/FEB/93 21:17:37 1.28

2 = .54511 PPM NOX

5 = 30.974 PPM CO 28 = 20.562 % O2 30 =-.03153 PPM SO2

15/FEB/93 21:

Chamstar

CO

	Run #1	Run #2	Run #3
1	27.26	76.56	74.05
2	27.27	71.27	72.01
3	38.76	75.73	72.49
4	69.58	73.04	76.34
5	68.62	69.30	74.17
6	74.36	69.05	75.44
7	74.04	75.78	76.56
8	75.56	91.79	85.36
9	75.31	68.25	83.29
10	72.10	77.18	84.41
11	73.72	76.07	79.94
12	73.32	74.51	79.12
13	71.65	71.20	76.68
14	73.47	80.73	76.35
15	72.03	69.44	74.87
16	70.36	71.91	73.20
17	72.70	71.29	73.27
18	72.41	73.28	75.51
19	73.85	71.52	73.74
20	76.01	75.66	87.88
21	74.37	86.50	70.17
22	72.73	88.52	81.98
23	77.72	86.65	76.17
24	76.66	90.42	78.47
25	71.27	83.84	75.31
26	75.73	87.35	76.13
27	73.64	91.06	75.04
28	69.30	86.42	75.17
29	69.05	90.20	76.20
30	75.78	91.96	76.78
Average =	68.95	78.88	76.87

NOX

	Run #1	Run #2	Run #3
1	0.52	25.75	26.22
2	0.69	25.32	26.00
3	0.78	25.24	25.52
4	14.23	25.07	25.19
5	16.76	24.57	24.90
6	26.59	24.85	24.61
7	26.29	24.54	24.08
8	25.96	24.59	15.04
9	25.64	15.63	17.51
10	25.22	25.29	27.40
11	24.77	27.08	27.01
12	24.41	26.93	26.73
13	24.13	26.66	26.39
14	23.98	26.17	25.98
15	23.89	25.81	25.33
16	24.56	25.72	25.13
17	23.44	25.39	25.01
18	27.24	25.92	24.88
19	27.04	24.79	24.23
20	26.87	23.84	30.94
21	26.44	14.97	15.52
22	26.08	18.72	27.63
23	25.68	27.02	26.47
24	26.26	26.78	26.25
25	24.97	26.50	25.77
26	24.54	26.09	25.48
27	32.19	25.53	24.74
28	29.64	25.14	24.49
29	26.40	25.62	24.37
30	27.47	24.42	23.91
Average =	22.76	24.66	24.76

SO2

	Run #1	Run #2	Run #3
1	0.01	0.06	0.06
2	0.01	0.11	0.10
3	0.06	0.10	0.12
4	0.03	0.08	0.62
5	0.07	0.05	0.07
6	0.07	0.08	0.10
7	0.08	0.04	0.09
8	0.10	0.06	0.03
9	0.09	0.07	0.09
10	0.08	0.09	0.14
11	0.09	0.08	0.10
12	0.08	0.10	0.10
13	0.10	0.12	0.11
14	0.07	0.09	0.09
15	0.10	0.07	0.11
16	0.09	0.11	0.08
17	0.03	0.10	0.09
18	0.01	0.10	0.10
19	0.09	0.08	0.09
20	0.09	0.11	0.05
21	0.10	0.04	0.09
22	0.07	0.08	0.09
23	0.10	0.13	0.10
24	0.10	0.10	0.13
25	0.06	0.08	0.11
26	0.09	0.10	0.10
27	0.09	0.09	0.12
28	0.07	0.09	0.09
29	0.03	0.02	0.10
30	0.06	0.08	0.07
Average =	0.07	0.08	0.11

O2

	Run #1	Run #2	Run #3
1	20.56	7.45	7.36
2	20.80	7.47	7.38
3	18.10	7.50	7.38
4	16.89	7.50	7.41
5	16.23	7.52	7.42
6	7.43	7.53	7.48
7	7.43	7.53	7.56
8	7.44	7.59	16.96
9	7.46	14.32	16.06
10	7.48	16.66	7.33
11	7.47	8.87	7.35
12	7.52	7.40	7.41
13	7.53	7.42	7.38
14	7.56	7.48	7.39
15	7.54	7.44	7.39
16	7.54	7.41	7.42
17	7.65	7.43	7.43
18	7.48	7.48	7.53
19	7.50	7.50	7.59
20	7.47	7.56	17.84
21	7.50	9.56	16.47
22	7.51	16.75	7.38
23	7.47	14.20	7.38
24	7.51	7.37	7.37
25	7.57	7.34	7.40
26	7.70	7.37	7.39
27	18.50	7.38	7.42
28	7.80	7.40	7.43
29	7.45	7.47	7.50
30	7.47	7.45	7.59
Average =	9.72	8.64	8.68

Appendix "E"
(Emission Calculations)

American Environmental Testing Company Inc.

801-266-7111

Sample Calculations

For CEMS

SO_2

SO_2 = (ppmdv) x (1.660×10^{-7}) = pounds/dscf
(lbs/dscf) x (Q_s Flow Rate in dscf/hr) = pounds/hour

Sample Calculations

NOx

NOx = (ppmdv) x (1.194×10^{-7}) = pounds/dscf
(lbs/dscf) x (Q_s Flow Rate in dscf/hr) = pounds/hour

CO

CO = (ppmdv) x (1-%CO_2) x (0.728×10^{-7}) = pounds/dscf
(pounds/dscf) x (Q_s Flow Rate in dscf/hr) = pounds/hour

American Environmental
Testing Company, Inc.
565 South Birch Drive
Spanish Fork, Utah 84660
801-798-8553

Nomenclature for Particulate Calculations

Symbol	English Units	Metric Units	Description
A_s	$in.^2$	m^2	Stack Area
C_{an}	gr/dscf*	g/dscm*	Particulate - probe, cyclone and filter
C_{ao}	gr/dscf*	g/dscm*	Particulate - total
C_{at}	gr/CF @ stack conditions	g/m^3	Particulate - probe, cyclone and filter
C_{au}	gr/CF @ stack conditions	g/m^3	Particulate - total
C_{aw}	lbs/hr	kg/hr	Particulate - probe, cyclone and filter
C_{ax}	lbs/hr	kg/hr	Particulate - total
C_p			Pitot Tube Calibration Factor
D_n	in.	m	Sampling Nozzle Diameter
%EA			Percent Excess Air at sampling point
g	32.2 ft/sec^2		Acceleration of gravity
%I			Percent isokinetic
%M			Percent moisture in the stack gas by volume
M_d			Mole fraction of dry gas
m_f	mg	mg	Particulate - probe, cyclone and filter
M_{H_2O}	18 lb/lb-mole		Molecular Weight of Water
m_t	mg	mg	Particulate - total

* 29.92 "Hg, 528°R (760 mm Hg, 20°C)

Symbol	English Units	Metric Units	Description
$V_{w_{gas}}$	scf*	scm*	Volume of Water Vapor Collected @ standard conditions
ρ_{air}	0.0748 lbs/ft^3		Density of Air
ρ_{H_2O}	1 g/ml		Density of Water
ρ_{man}	51.63 lbs/ft^3		Density of Manometer Oil

Standard Conditions: 29.92 "Hg, 68°F (760 mm Hg, 20°C)

* 29.92 "Hg, 528°R (760 mm Hg, 20°C)

American Environmental
Testing Company, Inc.
565 South Birch Drive
Spanish Fork, Utah 84660
801-798-8553

Example Particulate Calculations

1. Volume of dry gas sampled at standard conditions.*

$$V_{m_{std}} = V_m \left(\frac{T_{std}}{T_m + 460}\right) \left[\frac{P_b + \frac{P_m}{13.6}}{P_{std}}\right]$$

$$V_{m_{std}} = 17.65\ V_m \left[\frac{P_b + \frac{P_m}{13.6}}{T_m + 460}\right] = \text{dscf}$$

$$V_{m_{std}} = \text{dscf} \times 0.028317 = \text{dscm}$$

2. Volume of water vapor collected at standard conditions.*

$$V_{w_{gas}} = \frac{(V_w - \text{gms } SO_2 - \text{gms } H_2S)\ \rho_{H_2O}\ R\ T_{std}}{P_{std}\ M_{H_2O}\ 453.6}$$

$$V_{w_{gas}} = 0.0472\ (V_w - \text{gms } SO_2 - \text{gms } H_2S) = \text{scf}$$

$$V_{w_{gas}} = \text{scf} \times 0.028317 = \text{scm}$$

3. Percent moisture in stack gas.

$$\%M = \frac{V_{w_{gas}}}{V_{m_{std}} + V_{w_{gas}}} \times 100 = \%$$

* 29.92 "Hg, 528°R (760 mm Hg, 20°C)

4. Mole fraction of dry gas.

$$M_d = \frac{100 - \%M}{100}$$

5. Average molecular weight of dry stack gas.

$$MW_d = \left[\%CO_2 \times \frac{44}{100}\right] + \left[\%O_2 \times \frac{32}{100}\right] + \left[\%N_2 \times \frac{28}{100}\right] + \left[\%CO \times \frac{28}{100}\right] = \text{lb/lb-mole} = \text{g/g-mole}$$

6. Molecular weight of stack gas.

$$MW = MW_d \times M_d + 18\ (1-M_d) = \frac{\text{lb}}{\text{lb-mole}} = \text{g/g-mole}$$

7. Percent excess air at sampling point.

$$\%EA = \frac{100\ (\%O_2 - 0.5\%\ CO)}{0.265\ (\%N_2) - (\%O_2) + 0.5\ (\%CO)}$$

8. Stack Pressure.

$$P_s = P_b + \frac{\text{stack pressure "}H_2O}{13.6} = \text{"Hg Absolute}$$

$$P_s = \text{"Hg Abs.} \times 25.4 = \text{mm Hg}$$

* 29.92 "Hg, 528°R (760 mm Hg, 20°C)

9. Stack velocity at stack conditions.

$$V_s = C_p\ 60 \left[\frac{2g \times \rho_{man} \times P_{std} \times MW_{air} \times (T_s + 460) \times \Delta P_s}{12 \times \rho_{air} \times P_s \times MW \times T_{std}} \right]^{\frac{1}{2}}$$

$$V_s = 5123.8\ C_p \left[\frac{(T_s + 460) \times \Delta P_s}{P_s \times MW} \right]^{\frac{1}{2}} = \text{fpm}$$

$$V_s = \text{fpm} \times 0.00508 = \text{m/sec}$$

10. Dry stack gas volume at standard conditions.*

$$Q_s = \frac{1}{144} V_s \times A_s \times M_d \times \frac{T_{std}}{T_s + 460} \times \frac{P_s}{P_{std}}$$

$$Q_s = \frac{0.123\ V_s \times A_s \times M_d \times P_s}{T_s + 460} = \text{DSCFM}$$

$$Q_s = \text{DSCFM} \times 1.6990 = \text{dscm/hr}$$

11. Actual stack gas volume at stack conditions.

$$Q_a = \frac{V_s \times A_s}{144} = \text{ACFM}$$

$$Q_a = \text{ACFM} \times 1.6990 = \text{m}^3/\text{hr}$$

* 29.92 "Hg, 528°R (760 mm Hg, 20°C)

15. Particulate - probe, cyclone and filter at stack conditions.

$$C_{at} = C_{an} \times \frac{P_s}{P_{std}} \times \frac{(T_{std})}{(T_s + 460)} \times M_d$$

$$C_{at} = \frac{17.65 \times C_{an} \times P_s \times M_d}{T_s + 460} = gr/CF$$

$$C_{at} = gr/CF \times 2.290 = g/m^3$$

16. Particulate - total, at stack conditions.

$$C_{au} = \frac{17.65 \times C_{ao} \times P_s \times M_d}{T_s + 460} = gr/CF$$

$$C_{au} = gr/CF \times 2.290 = g/m^3$$

17. Particulate - probe, cyclone and filter.

$$C_{aw} = C_{an} \times Q_s \times \frac{60 \text{ min}}{1 \text{ hr}} \times \frac{1 \text{ lb}}{7000 \text{ gr}}$$

$$C_{aw} = 0.00857 \times C_{an} \times Q_s = lbs/hr$$

$$C_{aw} = lbs/hr \times 0.4536 = kg/hr$$

18. Particulate - total.

$$C_{ax} = 0.00857 \times C_{ao} \times Q_s = lbs/hr$$

$$C_{ax} = lbs/hr \times 0.4536 = kg/hr$$

* 29.92 "Hg, 528°R (760 mm Hg, 20°C)

12. Percent isokinetic.

$$\%I = \frac{V_{m_{std}} \times (T_s + 460) \times P_{std} \times 100 \times 144}{M_d \times T_{std} \times P_s \times T_t \times V_s \times \frac{\pi D_n^2}{4}}$$

$$\%I = \frac{1039\ V_{m_{std}} \times (T_s + 460)}{M_d \times P_s \times T_t \times V_s \times D_n^2}$$

13. Particulate - probe, cyclone and filter.

$$C_{an} = \frac{m_f}{V_{m_{std}}} \times \frac{1\ gr}{64.8\ mg}$$

$$C_{an} = 0.0154\ \frac{m_f}{V_{m_{std}}} = gr/dscf^*$$

$$C_{an} = gr/dscf \times 2.290 = g/dscm^*$$

14. Particulate total.

$$C_{ao} = 0.0154 \times \frac{m_t}{V_{m_{std}}} = gr/dscf^*$$

$$C_{ao} = gr/dscf \times 2.290 = g/dscm^*$$

* 29.92 "Hg, 528°R (760 mm Hg, 20°C)

Appendix "F"
(Cyclonic Flow Determination)

American Environmental Testing Company Inc.

801-266-7111

American Environmental Testing Company, Inc.
565 South Birch Drive
Spanish Fork, Utah 84660

EPA Method 2 Cyclonic Flow Determination

Plant: Chemstar Lime - Bancroft

Run No.: Pretest

Location: DC - 120 Baghouse

Operator: AEJ - UBB

Date: 2-11-93

Amb. Temp. °F: 31°

Baro. Pressure: 23.39

Static Pressure: -0.17

Pitot Tube (Cp): 4'-C 0.8396

Stack Dimensions: 24.5" ID.

Traverse Point Number	Velocity head (ΔPs) In H2O	Stack Temperature °F	Cyclonic Flow Determination	
			ΔPs at 0° Reference	Angle which yields a null ΔP
1	0.49	35	0.05	8
2	0.55	36	0.04	10
3	0.60	35	0.03	6
4	0.69	35	0.07	12
5	0.78	33	0.04	8
6	0.88	32	0.05	11
7	0.93	33	0.08	10
8	1.05	34	0.07	12
9	1.1	35	0.06	10
10	1.05	36	0.04	9
11	1.1	35	0.05	11
12	1.0	37	0.04	8
13	~~1.0~~ 4.8	36	0.03	6
14	~~0.8~~ 0.63	34	0.04	8
15	0.75	37	0.02	5
16	0.84	36	0.03	7
17	0.94	35	0.06	12
18	1.05	34	0.08	13
19	1.0	33	0.08	14
20	0.99	33	0.07	13
21	1.05	32	0.05	10
22	1.1	31	0.04	9
23	1.0	31	0.03	7
24	0.94	32	0.02	5
				224/24
			Average Angle:	9.33°

American Environmental Testing Company, Inc.
565 South Birch Drive
Spanish Fork, Utah 84660

QR

EPA Method 2 Cyclonic Flow Determination

Plant: CHEMSTAR Lime

Location: QC-123

Date: 2/12-93

Baro. Pressure: 23.49

Pitot Tube (Cp): 6'AR = 0. ~~[illegible]~~ 0.8413

Run No.: Pretest

Operator: TBB - BB

Amb. Temp. °F: 35°F

Static Pressure: -0.18

Stack Dimensions: 28.0" I.D.

$P_{abs.}$ = 23.477

Traverse Point Number	Velocity head (ΔPs) In H2O	Stack Temperature °F	Cyclonic Flow Determination	
			ΔPs at 0° Reference	Angle which yields a null ΔP
1	1.05	34	-0 +0.02	3
2	1.15	35	+0.02	4
3	1.23	35	+0.03	6
4	1.08	35	+0.05	10
5	1.36	36	+0.05	11
6	1.31	35	-0.04	9
7	1.16	36	-0.03	7
8	1.00	36	-0.02	4
9	0.95	36	-0.02	3
10	0.94	35	-0.02	2
11	0.87	35	+0.01	2
12	0.82	34	+0.01	2
13	1.03	34	-0.02	3
14	1.17	34	-0.02	4
15	1.19	35	-0.03	5
16	1.10	36	-0.04	7
17	1.38	36	0	0
18	1.13	36	0	0
19	1.02	35	0	0
20	1.01	36	+0.02	4
21	0.95	36	+0.01	2
22	0.84	36	+0.01	2
23	0.79	36	+0.02	3
24	0.78	35	+0.01	2
				96/24
			Average Angle:	4.0

✓ok. ybb.

American Environmental Testing Company, Inc.
565 South Birch Drive
Spanish Fork, Utah 84660

EPA Method 2 Cyclonic Flow Determination

Plant: Chemstar

Run No.: Pretest

Location: DC-126

Operator: RAL - BS

Date: 2/13/93

Amb. Temp. °F: 37

Baro. Pressure: 23.48

Static Pressure: -0.11

Pitot Tube (Cp): 0.8396

Stack Dimensions: 12" ID
0.785 ft²

Traverse Point Number	Velocity head (ΔPs) In H2O	Stack Temperature °F	Cyclonic Flow Determination	
			ΔPs at 0° Reference	Angle which yields a null ΔP
1	0.52	37	0.02	4
2	0.58		0.03	5
3	0.59		0.03	7
4	0.65		0.03	8
5	0.69		0.03	8
6	0.79		0.04	9
7	0.82		0.05	8
8	0.96		0.05	11
9	1.05		0.06	13
10	1.12		0.05	12
11	1.18		0.05	12
12	1.15		0.05	11
13	0.58		0.03	8
14	0.62		0.03	7
15	0.67		0.03	7
16	0.78		0.04	10
17	0.87		0.04	11
18	0.99		0.04	11
19	1.05		0.05	13
20	1.07		0.04	14
21	1.12		0.05	15
22	1.1		0.05	15
23	1.07		0.05	14
24	1.05		0.05	11
				254/24
			Average Angle:	10.58°

EW

NS

American Environmental Testing Company, Inc.
565 South Birch Drive
Spanish Fork, Utah 84660

EPA Method 2 Cyclonic Flow Determination

Plant: Chemstar Jim

Location: DC-129

Date: 2-13-93

Baro. Pressure: 23.73

Pitot Tube (Cp): 0.8413

Run No.: Pretest

Operator: JS - TBB

Amb. Temp. °F: 36°

Static Pressure: -0.68

Stack Dimensions: 120"=

Traverse Point Number	Velocity head (ΔPs) In H2O	Stack Temperature °F	Cyclonic Flow Determination	
			ΔPs at 0° Reference	Angle which yields a null ΔP
1	0.85	40	0.05	10
2	1.05	41	0.07	9
3	1.1	36	0.09	12
4	1.2	38	0.04	8
5	1.25	40	0.05	9
6	1.3	42	0.06	10
7	0.9	40	0.07	10
8	1.05	36	0.03	5
9	1.1	37	0.04	5
10	1.1	36	0.05	6
11	1.2	39	0.05	7
12	1.25	40	0.06	10
				101/12
			Average Angle:	8.42°

American Environmental Testing Company, Inc.
565 South Birch Drive
Spanish Fork, Utah 84660

EPA Method 2 Cyclonic Flow Determination

Plant: Chemstar Lime - Bancroft, Id.

Run No.: Prelim -

Location: Tenmile Plant - DC-230

Operator: VBB - GET - VBB

Date: 2/15-93

Amb. Temp. °F: 13°

Baro. Pressure: 23.31

Static Pressure: -0.05

Pitot Tube (Cp): 4'c = 0.8396

Stack Dimensions: 28.0" ID = 4.276 ft²

Pabs. = 23.306

Traverse Point Number	Velocity head (ΔPs) In H2O	Stack Temperature °F	Cyclonic Flow Determination	
			ΔPs at 0° Reference - 0 +	Angle which yields a null ΔP
1	0.37	19	+0.01	2
2	0.36	18	0.02	4
3	0.35	20	0.01	3
4	0.35	21	0	0
5	0.38	22	0	0
6	0.37	20	0	0
7	0.39	19	0	0
8	0.35	19	0	0
9	0.36	18	0	0
10	0.39	18	0	0
11	0.38	16	-0.02	4
12	0.38	17	-0.02	5
13	0.34	18	-0.03	6
14	0.34	19	-0.02	5
15	0.37	20	0	0
16	0.36	19	-0.01	2
17	0.35	20	0	0
18	0.36	19	0	0
19	0.34	20	0	0
20	0.34	19	0	0
21	0.30	19	0	0
22	0.34	18	+0.02	2
23	0.33	17	+0.01	2
24	0.34	16	-0.01	1
				36/24
			Average Angle:	1.5°

Port.

N-S

E-W

Amb. @ 16-18°F
Wind @ 5 to 30 mph gusts

OK.
VBB.

American Environmental
Testing Company, Inc.
565 South Birch Drive
Spanish Fork, Utah 84660
801-266-7111

METHOD 2
CYCLONIC FLOW DETERMINATION DATA FORM

Plant CHEMSTAR Lime Co. Run No. Pretest - 0840 hrs.

Location Banroft, Idaho. (OC-303) Operator VBB - JDS - RBB - BS

Date 2/14-93 Amb. Temp. °F 34°

Bar. Press. ("Hg) 23.68 Static Press. ("H_2O) -0.23

Pitot Tube (Cp) 6' AB = 0.8413 for pipeline Stack Dimensions 7.75" ID = 0.323 ft² XS

$P_{abs.}$ = 23.663

Traverse point number	Velocity head (Δp_s), in. H_2O	Stack temp., °F	Cyclonic flow determination: Δp_s at 0° reference	Cyclonic flow determination: Angle (α) which yields a null Δp
1	0.37-0.34	OF = 35	-0.01	2
2	0.38-0.35	36	0	0
3	0.38-0.35	37	0	0
4	0.36-0.33	36	0	0
5	0.34-0.30	36	0	0
6	0.38-0.32	36	0	0
7	0.38-0.33	35	+0.01	2
8	0.38-0.30	36	+0.02	3
	Varies a little ? @ time			
		OF = 495.87		
Total		287		7
Avg.	> 0.34	35.875		0.875
			Average angle (α)[a]	< 1.0

[a] Average of α must be < 10 degrees to be acceptable

American Environmental Testing Company, Inc.
565 South Birch Drive
Spanish Fork, Utah 84660

EPA Method 2 Cyclonic Flow Determination

Plant: Chemstar Lime

Location: DC-316 Lime Kiln

Date: 2-15-93

Baro. Pressure: 23.41

Pitot Tube (Cp): 0.8415

Run No.: Pretest

Operator: JSJ - RH - RB

Amb. Temp. °F: 20°

Static Pressure: -0.25

Stack Dimensions: 47.0" = 12.048 ft

Traverse Point Number	Velocity head (ΔPs) In H2O	Stack Temperature °F	Cyclonic Flow Determination	
			ΔPs at 0° Reference	Angle which yields a null ΔP
1	1.35	174	0.01	5
2	1.4	200	0.03	7
3	1.55	207	0.05	10
4	1.6	205	0.08	12
5	1.5	200	0.05	8
6	1.45	202	0.04	7
7	1.55	203	0.06	10
8	1.65	205	0.03	5
9	1.6	208	0.02	3
10	1.45	204	0.04	7
11	1.5	200	0.05	10
12	1.55	200	0.07	9
13	1.35	201	0.09	12
14	1.45	209	0.07	11
15	1.6	210	0.05	8
16	1.6	211	0.05	8
17	1.55	210	0.04	7
18	1.5	207	0.02	5
19	1.65	204	0.02	5
20	1.6	205	0.05	8
21	1.6	205	0.06	10
22	1.5	203	0.04	8
23	1.45	201	0.04	7
24	1.4	200	0.02	5
				185/24
			Average Angle:	7.71°

Appendix "G"
(VEO's and Certifications)

American Environmental Testing Company Inc.

801-266-7111

Visible Emissions Observation- Long Form

Source Chemstar Lime, Bancroft, Idaho #9 Date 2-12-93 Inspector [illegible]

DC-120 Baghouse

Time	0	15	30	45	Time	0	15	30	45	Time	0	15	30	45
10:00	0	0	0	0	10:06	0	0	0	0	10:12	0	0	0	0
01	0	0	0	0	07	0	0	0	0	13	0	0	0	0
02	0	0	0	0	08	0	0	0	0	14	0	0	0	0
03	0	0	0	0	09	0	0	0	0	15	0	0	0	0
04	0	0	0	0	10	0	0	0	0	16	0	0	0	0
05	0	0	0	0	11	0	0	0	0	17	0	0	0	0
Ave. 0/24 = 0					Ave. 0/24 = 0					Ave. 0/24 = 0				
10:18	0	0	0	0	10:24	0	0	0	0	10:30	0	0	0	0
19	0	0	0	0	25	0	0	0	0	31	0	0	0	0
20	0	0	0	0	26	0	0	0	0	32	0	0	0	0
21	0	0	0	0	27	0	0	0	0	33	0	0	0	0
22	0	0	0	0	28	0	0	0	0	34	0	0	0	0
23	0	0	0	0	29	0	0	0	0	35	0	0	0	0
Ave. 0/24 = 0					Ave. 0/24 = 0					Ave. 0/24 = 0				
10:36	0	0	0	0	10:42	0	0	0	0	10:48	0	0	0	0
37	0	0	0	0	43	0	0	0	0	49	0	0	0	0
38	0	0	0	0	44	0	0	0	0	50	0	0	0	0
39	0	0	0	0	45	0	0	0	0	51	0	0	0	0
40	0	0	0	0	46	0	0	0	0	52	0	0	0	0
41	0	0	0	0	47	0	0	0	0	53	0	0	0	0
Ave. 0/24 = 0					Ave. 0/24 = 0					Ave. 0/24 = 0				
10:54	0	0	0	0	11:15	0	0	0	0	11:21	0	0	0	0
55	0	0	0	0	16	0	0	0	0	22	0	0	0	0
56	0	0	0	0	17	0	0	0	0	23	0	0	0	0
57	0	0	0	0	18	0	0	0	0	24	0	0	0	0
58	0	0	0	0	19	0	0	0	0	25	0	0	0	0
59	0	0	0	0	20	0	0	0	0	26	0	0	0	0
Ave. 0/24 = 0					Ave. 0/24 = 0					Ave. 0/24 = 0				
11:27	0	0	0	0	11:33	0	0	0	0	11:39	0	0	0	0
28	0	0	0	0	34	0	0	0	0	40	0	0	0	0
29	0	0	0	0	35	0	0	0	0	41	0	0	0	0
30	0	0	0	0	36	0	0	0	0	42	0	0	0	0
31	0	0	0	0	37	0	0	0	0	43	0	0	0	0
32	0	0	0	0	38	0	0	0	0	44	0	0	0	0
Ave. 0/24 = 0					Ave. 0/24 = 0					Ave. 0/24 = 0				

Note: Shut on at 5 AM started back at 12:15

Total time of actual observation 3 hrs. 0 mins.

Number of six minute observations 30

Total of opacity averages (6 minute periods) 0/30 = 0

For total observation time, average opacity equals 0 %

mte/0920Q

Visible Emissions Observation- Long Form

Source Chemstar Lime, Bancroft, Idaho Date 2-12-93 Inspector [illegible]

OC-120 Baghouse

Time	0	15	30	45	Time	0	15	30	45	Time	0	15	30	45
11:45	0	0	0	0	12:20	0	0	0	0	12:26	0	0	0	0
12:15	0	0	0	0	21	0	0	0	0	27	0	0	0	0
16	0	0	0	0	22	0	0	0	0	28	0	0	0	0
17	0	0	0	0	23	0	0	0	0	29	0	0	0	0
18	0	0	0	0	24	0	0	0	0	30	0	0	0	0
19	0	0	0	0	25	0	0	0	0	31	0	0	0	0
Ave. 0/24 = 0					Ave. 0/24 = 0					Ave. 0/24 = 0				
12:32	0	0	0	0	12:38	0	0	0	0	12:55	0	0	0	0
33	0	0	0	0	39	0	0	0	0	56	0	0	0	0
34	0	0	0	0	40	0	0	0	0	57	0	0	0	0
35	0	0	0	0	41	0	0	0	0	58	0	0	0	0
36	0	0	0	0	42	0	0	0	0	59	0	0	0	0
37	0	0	0	0	43	0	0	0	0	1:00	0	0	0	0
Ave. 0/24 = 0					Ave. 0/24 = 0					Ave. 0/24 = 0				
1:01	0	0	0	0	1:07	0	0	0	0	1:13	0	0	0	0
02	0	0	0	0	08	0	0	0	0	14	0	0	0	0
03	0	0	0	0	09	0	0	0	0	15	0	0	0	0
04	0	0	0	0	10	0	0	0	0	16	0	0	0	0
05	0	0	0	0	11	0	0	0	0	17	0	0	0	0
06	0	0	0	0	12	0	0	0	0	18	0	0	0	0
Ave. 0/24 = 0					Ave. 0/24 = 0					Ave. 0/24 = 0				
1:19	0	0	0	0	1:25	0	0	0	0	1:31	0	0	0	0
20	0	0	0	0	26	0	0	0	0	32	0	0	0	0
21	0	0	0	0	27	0	0	0	0	33	0	0	0	0
22	0	0	0	0	28	0	0	0	0	34	0	0	0	0
23	0	0	0	0	29	0	0	0	0	35	0	0	0	0
24	0	0	0	0	30	0	0	0	0	36	0	0	0	0
Ave. 0/24 = 0					Ave. 0/24 = 0					Ave. 0/24 = 0				
1:37	0	0	0	0	1:43	0	0	0	0	1:49	0	0	0	0
38	0	0	0	0	44	0	0	0	0	50	0	0	0	0
39	0	0	0	0	45	0	0	0	0	51	0	0	0	0
40	0	0	0	0	46	0	0	0	0	52	0	0	0	0
41	0	0	0	0	47	0	0	0	0	53	0	0	0	0
42	0	0	0	0	48	0	0	0	0	54	0	0	0	0
Ave. 0/24 = 0					Ave. 0/24 = 0					Ave. 0/24 = 0				

Total time of actual observation 3 hrs. 0 mins.

Number of six minute observations 30

Total of opacity averages (6 minute periods) 0/30 = 0

For total observation time, average opacity equals 0 %

mte/0920Q

Visible Emissions Observation- Long Form

Source #20 DC-123 Date 2-12-93 Inspector [illegible]

Time	0	15	30	45	Time	0	15	30	45	Time	0	15	30	45
1412	0	0	0	0	1442	0	0	0	0	1535	0	0	0	0
13	0	0	0	0	43	0	0	0	0	36	0	0	0	0
14	0	0	0	0	44	0	0	0	0	37	0	0	0	0
15	0	0	0	0	45	0	0	0	0	38	0	0	0	0
16	0	0	0	0	46	0	0	0	0	39	0	0	0	0
17	0	0	0	0	47	0	0	0	0	40	0	0	0	0
Ave. 0/24 = 0%					Ave. 0/24 = 0%					Ave. 0/24 = 0%				
1418	0	0	0	0	1448	0	0	0	0	1541	0	0	0	0
19	0	0	0	0	49	0	0	0	0	42	0	0	0	0
20	0	0	0	0	50	0	0	0	0	43	0	0	0	0
21	0	0	0	0	51	0	0	0	0	44	0	0	0	0
22	0	0	0	0	52	0	0	0	0	45	0	0	0	0
23	0	0	0	0	53	0	0	0	0	46	0	0	0	0
Ave. 0/24 = 0%					Ave. 0/24 = 0%					Ave. 0/24 = 0%				
1424	0	0	0	0	1454	0	0	0	0	1547	0	0	0	0
25	0	0	0	0	55	0	0	0	0	48	0	0	0	0
26	0	0	0	0	56	0	0	0	0	49	0	0	0	0
27	0	0	0	0	57	0	0	0	0	50	0	0	0	0
28	0	0	0	0	58	0	0	0	0	51	0	0	0	0
29	0	0	0	0	59	0	0	0	0	52	0	0	0	0
Ave. 0/24 = 0%					Ave. 0/24 = 0%					Ave. 0/24 = 0%				
1430	0	0	0	0	1500	0	0	0	0	1553	0	0	0	0
31	0	0	0	0	01	0	0	0	0	54	0	0	0	0
32	0	0	0	0	02	0	0	0	0	55	0	0	0	0
33	0	0	0	0	03	0	0	0	0	56	0	0	0	0
34	0	0	0	0	04	0	0	0	0	57	0	0	0	0
35	0	0	0	0	05	0	0	0	0	58	0	0	0	0
Ave. 0/24 = 0%					Ave. 0/24 = 0%					Ave. 0/24 = 0%				
1436	0	0	0	0	1506	0	0	0	0	1559	0	0	0	0
37	0	0	0	0	07	0	0	0	0	1600	0	0	0	0
38	0	0	0	0	08	0	0	0	0	01	0	0	0	0
39	0	0	0	0	09	0	0	0	0	02	0	0	0	0
40	0	0	0	0	10	0	0	0	0	03	0	0	0	0
41	0	0	0	0	11	0	0	0	0	04	0	0	0	0
Ave. 0/24 = 0%					Ave. 0/24 = 0%					Ave. 0/24 = 0%				

Total time of actual observation 1 hrs. 30 mins.

Number of six minute observations 15

Total of opacity averages (6 minute periods) 0

For total observation time, average opacity equals 0 %

mte/0920Q

Visible Emissions Observation- Long Form

Source #17 DC - 123 Date 2-12-93 Inspector [illegible]

Time	0	15	30	45
1605	0	0	0	0
06	0	0	0	0
07	0	0	0	0
08	0	0	0	0
09	0	0	0	0
10	0	0	0	0
Ave.	0/24 = 0%			
1611	0	0	0	0
12	0	0	0	0
13	0	0	0	0
14	0	0	0	0
15	0	0	0	0
16	0	0	0	0
Ave.	0/24 = 0%			
1617	0	0	0	0
18	0	0	0	0
19	0	0	0	0
20	0	0	0	0
21	0	0	0	0
22	0	0	0	0
Ave.	0/24 = 0%			
1623	0	0	0	0
24	0	0	0	0
25	0	0	0	0
26	0	0	0	0
27	0	0	0	0
28	0	0	0	0
Ave.	0/24 = 0%			
1629	0	0	0	0
30	0	0	0	0
31	0	0	0	0
32	0	0	0	0
33	0	0	0	0
34	0	0	0	0
Ave.	0/24 = 0%			

Time	0	15	30	45
1650	0	0	0	0
51	0	0	0	0
52	0	0	0	0
53	0	0	0	0
54	0	0	0	0
55	0	0	0	0
Ave.	0/24 = 0%			
1656	0	0	0	0
57	0	0	0	0
58	0	0	0	0
59	0	0	0	0
1700	0	0	0	0
01	0	0	0	0
Ave.	0/24 = 0%			
1702	0	0	0	0
03	0	0	0	0
04	0	0	0	0
05	0	0	0	0
06	0	0	0	0
07	0	0	0	0
Ave.	0/24 = 0%			
1708	0	0	0	0
09	0	0	0	0
10	0	0	0	0
11	0	0	0	0
12	0	0	0	0
13	0	0	0	0
Ave.	0/24 = 0%			
1714	0	0	0	0
15	0	0	0	0
16	0	0	0	0
17	0	0	0	0
18	0	0	0	0
19	0	0	0	0
Ave.	0/24 = 0%			

Time	0	15	30	45
1720	0	0	0	0
21	0	0	0	0
22	0	0	0	0
23	0	0	0	0
24	0	0	0	0
25	0	0	0	0
Ave.	0/24 = 0%			
1726	0	0	0	0
27	0	0	0	0
28	0	0	0	0
29	0	0	0	0
30	0	0	0	0
31	0	0	0	0
Ave.	0/24 = 0%			
1732	0	0	0	0
33	0	0	0	0
34	0	0	0	0
35	0	0	0	0
36	0	0	0	0
37	0	0	0	0
Ave.	0/24 = 0%			
1738	0	0	0	0
39	0	0	0	0
40	0	0	0	0
41	0	0	0	0
42	0	0	0	0
43	0	0	0	0
Ave.	0/24 = 0%			
1744	0	0	0	0
45	0	0	0	0
46	0	0	0	0
47	0	0	0	0
48	0	0	0	0
49	0	0	0	0
Ave.	0/24 = 0%			

Total time of actual observation 1 hrs. 30 mins.
Number of six minute observations 15
Total of opacity averages (6 minute periods) 0
For total observation time, average opacity equals 0 %
mte/0920Q

Visible Emissions Observation- Long Form

page 1 of 1

Source #23 PC-126 Date 2-13-93 Inspector [illegible]

Time	0	15	30	45	Time	0	15	30	45	Time	0	15	30	45
1000	0	0	0	0	1030	0	0	0	0	1100	0	0	0	0
01	0	0	0	0	31	0	0	0	0	01	0	0	0	0
02	0	0	0	0	32	0	0	0	0	02	0	0	0	0
03	0	0	0	0	33	0	0	0	0	03	0	0	0	0
04	0	0	0	0	34	0	0	0	0	04	0	0	0	0
05	0	0	0	0	35	0	0	0	0	05	0	0	0	0
Ave. 0/24 = 0%					Ave. 0/24 = 0%					Ave. 0/24 = 0%				
1006	0	0	0	0	1036	0	0	0	0	1106	0	0	0	0
07	0	0	0	0	37	0	0	0	0	07	0	0	0	0
08	0	0	0	0	38	0	0	0	0	08	0	0	0	0
09	0	0	0	0	39	0	0	0	0	09	0	0	0	0
10	0	0	0	0	40	0	0	0	0	10	0	0	0	0
11	0	0	0	0	41	0	0	0	0	11	0	0	0	0
Ave. 0/24 = 0%					Ave. 0/24 = 0%					Ave. 0/24 = 0%				
1012	0	0	0	0	1042	0	0	0	0	1112	0	0	0	0
13	0	0	0	0	43	0	0	0	0	13	0	0	0	0
14	0	0	0	0	44	0	0	0	0	14	0	0	0	0
15	0	0	0	0	45	0	0	0	0	15	0	0	0	0
16	0	0	0	0	46	0	0	0	0	16	0	0	0	0
17	0	0	0	0	47	0	0	0	0	17	0	0	0	0
Ave. 0/24 = 0%					Ave. 0/24 = 0%					Ave. 0/24 = 0%				
1018	0	0	0	0	1048	0	0	0	0	1118	0	0	0	0
19	0	0	0	0	49	0	0	0	0	19	0	0	0	0
20	0	0	0	0	50	0	0	0	0	20	0	0	0	0
21	0	0	0	0	51	0	0	0	0	21	0	0	0	0
22	0	0	0	0	52	0	0	0	0	22	0	0	0	0
23	0	0	0	0	53	0	0	0	0	23	0	0	0	0
Ave. 0/24 = 0%					Ave. 0/24 = 0%					Ave. 0/24 = 0%				
1024	0	0	0	0	1054	0	0	0	0	1124	0	0	0	0
25	0	0	0	0	55	0	0	0	0	25	0	0	0	0
26	0	0	0	0	56	0	0	0	0	26	0	0	0	0
27	0	0	0	0	57	0	0	0	0	27	0	0	0	0
28	0	0	0	0	58	0	0	0	0	28	0	0	0	0
29	0	0	0	0	59	0	0	0	0	29	0	0	0	0
Ave. 0/24 = 0%					Ave. 0/24 = 0%					Ave. 0/24 = 0%				

Total time of actual observation 1 hrs. 30 mins.

Number of six minute observations 15

Total of opacity averages (6 minute periods) 0

For total observation time, average opacity equals 0 %

mte/0920Q

Visible Emissions Observation- Long Form

Source #23 AC 126 Date 2-13-93 Inspector [illegible]

Time	0	15	30	45	Time	0	15	30	45	Time	0	15	30	45
1230	0	0	0	0	1300	0	0	0	0	1330	0	0	0	0
31	0	0	0	0	01	0	0	0	0	31	0	0	0	0
32	0	0	0	0	02	0	0	0	0	32	0	0	0	0
33	0	0	0	0	03	0	0	0	0	33	0	0	0	0
34	0	0	0	0	04	0	0	0	0	34	0	0	0	0
35	0	0	0	0	05	0	0	0	0	35	0	0	0	0
Ave. 0/24 = 0%					Ave. 0/24 = 0%					Ave. 0/24 = 0%				
1236	0	0	0	0	1336	0	0	0	0	1336	0	0	0	0
37	0	0	0	0	07	0	0	0	0	37	0	0	0	0
38	0	0	0	0	08	0	0	0	0	38	0	0	0	0
39	0	0	0	0	09	0	0	0	0	39	0	0	0	0
40	0	0	0	0	10	0	0	0	0	40	0	0	0	0
41	0	0	0	0	11	0	0	0	0	41	0	0	0	0
Ave. 0/24 = 0%					Ave. 0/24 = 0%					Ave. 0/24 = 0%				
1242	0	0	0	0	1312	0	0	0	0	1342	0	0	0	0
43	0	0	0	0	13	0	0	0	0	43	0	0	0	0
44	0	0	0	0	14	0	0	0	0	44	0	0	0	0
45	0	0	0	0	15	0	0	0	0	45	0	0	0	0
46	0	0	0	0	16	0	0	0	0	46	0	0	0	0
47	0	0	0	0	17	0	0	0	0	47	0	0	0	0
Ave. 0/24 = 0%					Ave. 0/24 = 0%					Ave. 0/24 = 0%				
1248	0	0	0	0	1318	0	0	0	0	1348	0	0	0	0
49	0	0	0	0	19	0	0	0	0	49	0	0	0	0
50	0	0	0	0	20	0	0	0	0	50	0	0	0	0
51	0	0	0	0	21	0	0	0	0	51	0	0	0	0
52	0	0	0	0	22	0	0	0	0	52	0	0	0	0
53	0	0	0	0	23	0	0	0	0	53	0	0	0	0
Ave. 0/24 = 0%					Ave. 0/24 = 0%					Ave. 0/24 = 0%				
1254	0	0	0	0	1324	0	0	0	0	1354	0	0	0	0
55	0	0	0	0	25	0	0	0	0	55	0	0	0	0
56	0	0	0	0	26	0	0	0	0	56	0	0	0	0
57	0	0	0	0	27	0	0	0	0	57	0	0	0	0
58	0	0	0	0	28	0	0	0	0	58	0	0	0	0
59	0	0	0	0	29	0	0	0	0	59	0	0	0	0
Ave. 0/24 = 0%					Ave. 0/24 = 0%					Ave. 0/24 = 0%				

Total time of actual observation 1 hrs. 30 mins.

Number of six minute observations 15

Total of opacity averages (6 minute periods) 0

For total observation time, average opacity equals 0 %

mte/0920Q

Visible Emissions Observation- Long Form

Source Chemstar Lime, Bancroft, Idaho #24 Date 2-13-93 Inspector [illegible]

DC-129 Baghouse

Time	0	15	30	45	Time	0	15	30	45	Time	0	15	30	45
10:05	0	0	0	0	10:11	0	0	0	0	10:17	0	0	0	0
06	0	0	0	0	12	0	0	0	0	18	0	0	0	0
07	0	0	0	0	13	0	0	0	0	19	0	0	0	0
08	0	0	0	0	14	0	0	0	0	20	0	0	0	0
09	0	0	0	0	15	0	0	0	0	21	0	0	0	0
10	0	0	0	0	16	0	0	0	0	22	0	0	0	0
Ave. 0/24 = 0					Ave. 0/24 = 0					Ave. 0/24 = 0				
10:23	0	0	0	0	10:29	0	0	0	0	10:35	0	0	0	0
24	0	0	0	0	30	0	0	0	0	36	0	0	0	0
25	0	0	0	0	31	0	0	0	0	37	0	0	0	0
26	0	0	0	0	32	0	0	0	0	38	0	0	0	0
27	0	0	0	0	33	0	0	0	0	39	0	0	0	0
28	0	0	0	0	34	0	0	0	0	40	0	0	0	0
Ave. 0/24 = 0					Ave. 0/24 = 0					Ave. 0/24 = 0				
10:41	0	0	0	0	10:47	0	0	0	0	10:53	0	0	0	0
42	0	0	0	0	48	0	0	0	0	54	0	0	0	0
43	0	0	0	0	49	0	0	0	0	55	0	0	0	0
44	0	0	0	0	50	0	0	0	0	56	0	0	0	0
45	0	0	0	0	51	0	0	0	0	57	0	0	0	0
46	0	0	0	0	52	0	0	0	0	58	0	0	0	0
Ave. 0/24 = 0					Ave. 0/24 = 0					Ave. 0/24 = 0				
10:59	0	0	0	0	11:20	0	0	0	0	11:26	0	0	0	0
11:00	0	0	0	0	21	0	0	0	0	27	0	0	0	0
01	0	0	0	0	22	0	0	0	0	28	0	0	0	0
02	0	0	0	0	23	0	0	0	0	29	0	0	0	0
03	0	0	0	0	24	0	0	0	0	30	0	0	0	0
04	0	0	0	0	25	0	0	0	0	31	0	0	0	0
Ave. 0/24 = 0					Ave. 0/24 = 0					Ave. 0/24 = 0				
11:32	0	0	0	0	11:38	0	0	0	0	11:44	0	0	0	0
33	0	0	0	0	39	0	0	0	0	45	0	0	0	0
34	0	0	0	0	40	0	0	0	0	46	0	0	0	0
35	0	0	0	0	41	0	0	0	0	47	0	0	0	0
36	0	0	0	0	42	0	0	0	0	48	0	0	0	0
37	0	0	0	0	43	0	0	0	0	49	0	0	0	0
Ave. 0/24 = 0					Ave. 0/24 = 0					Ave. 0/24 = 0				

Total time of actual observation 3 hrs. 0 mins.

Number of six minute observations 30

Total of opacity averages (6 minute periods) ——

For total observation time, average opacity equals —— %

mte/0920Q

Visible Emissions Observation- Long Form

Source Chemstar Lime, Bancroft, Idaho DC-129 Baghouse Date 2-13-93 Inspector [illegible]

Time	0	15	30	45	Time	0	15	30	45	Time	0	15	30	45
11:50	0	0	0	0	11:56	0	0	0	0	12:02	0	0	0	0
51	0	0	0	0	57	0	0	0	0	03	0	0	0	0
52	0	0	0	0	58	0	0	0	0	04	0	0	0	0
53	0	0	0	0	59	0	0	0	0	05	0	0	0	0
54	0	0	0	0	12:00	0	0	0	0	06	0	0	0	0
55	0	0	0	0	01	0	0	0	0	07	0	0	0	0
Ave. 0/24 = 0					Ave. 0/24 = 0					Ave. 0/24 = 0				
12:08	0	0	0	0	12:14	0	0	0	0	12:30	0	0	0	0
09	0	0	0	0	15	0	0	0	0	31	0	0	0	0
10	0	0	0	0	16	0	0	0	0	32	0	0	0	0
11	0	0	0	0	17	0	0	0	0	33	0	0	0	0
12	0	0	0	0	18	0	0	0	0	34	0	0	0	0
13	0	0	0	0	19	0	0	0	0	35	0	0	0	0
Ave. 0/24 = 0					Ave. 0/24 = 0					Ave. 0/24 = 0				
12:36	0	0	0	0	12:42	0	0	0	0	12:48	0	0	0	0
37	0	0	0	0	43	0	0	0	0	49	0	0	0	0
38	0	0	0	0	44	0	0	0	0	50	0	0	0	0
39	0	0	0	0	45	0	0	0	0	51	0	0	0	0
40	0	0	0	0	46	0	0	0	0	52	0	0	0	0
41	0	0	0	0	47	0	0	0	0	53	0	0	0	0
Ave. 0/24 = 0					Ave. 0/24 = 0					Ave. 0/24 = 0				
12:54	0	0	0	0	1:00	0	0	0	0	1:06	0	0	0	0
55	0	0	0	0	01	0	0	0	0	07	0	0	0	0
56	0	0	0	0	02	0	0	0	0	08	0	0	0	0
57	0	0	0	0	03	0	0	0	0	09	0	0	0	0
58	0	0	0	0	04	0	0	0	0	10	0	0	0	0
59	0	0	0	0	05	0	0	0	0	11	0	0	0	0
Ave. 0/24 = 0					Ave. 0/24 = 0					Ave. 0/24 = 0				
1:12	0	0	0	0	1:18	0	0	0	0	1:24	0	0	0	0
13	0	0	0	0	19	0	0	0	0	25	0	0	0	0
14	0	0	0	0	20	0	0	0	0	26	0	0	0	0
15	0	0	0	0	21	0	0	0	0	27	0	0	0	0
16	0	0	0	0	22	0	0	0	0	28	0	0	0	0
17	0	0	0	0	23	0	0	0	0	29	0	0	0	0
Ave. 0/24 = 0					Ave. 0/24 = 0					Ave. 0/24 = 0				

Total time of actual observation 3 hrs. 0 mins.

Number of six minute observations 30

Total of opacity averages (6 minute periods) 0/30 = 0

For total observation time, average opacity equals 0 %

mte/0920Q

Visible Emissions Observation- Long Form

Source Chemstar Lime #49 DC-230 STACK Date 2-15-93 Inspector R.H.

Time	0	15	30	45
1035	0	0	0	0
36	0	0	0	0
37	0	0	0	0
38	0	0	0	0
39	0	0	0	0
40	0	0	0	0
Ave.				
1053	0	0	0	0
54	0	0	0	0
55	0	0	0	0
56	0	0	0	0
57	0	0	0	0
58	0	0	0	0
Ave.				
1111	0	0	0	0
1112	0	0	0	0
13	0	0	0	0
14	0	0	0	0
15	0	0	0	0
16	0	0	0	0
Ave.				
1129	0	0	0	0
30	0	0	0	0
31	0	0	0	0
32	0	0	0	0
33	0	0	0	0
34	0	0	0	0
Ave.				
1202	0	0	0	0
3	0	0	0	0
4	0	0	0	0
5	0	0	0	0
6	0	0	0	0
7	0	0	0	0
Ave.				

Time	0	15	30	45
1041	0	0	0	0
42	0	0	0	0
43	0	0	0	0
44	0	0	0	0
45	0	0	0	0
46	0	0	0	0
Ave.				
1059	0	0	0	0
1100	0	0	0	0
1	0	0	0	0
2	0	0	0	0
3	0	0	0	0
4	0	0	0	0
Ave.				
1117	0	0	0	0
18	0	0	0	0
19	0	0	0	0
20	0	0	0	0
21	0	0	0	0
22	0	0	0	0
Ave.				
1150	0	0	0	0
51	0	0	0	0
52	0	0	0	0
53	0	0	0	0
54	0	0	0	0
55	0	0	0	0
Ave.				
1208	0	0	0	0
9	0	0	0	0
10	0	0	0	0
11	0	0	0	0
12	0	0	0	0
13	0	0	0	0
Ave.				

Time	0	15	30	45
1047	0	0	0	0
48	0	0	0	0
49	0	0	0	0
50	0	0	0	0
51	0	0	0	0
52	0	0	0	0
Ave.				
1105	0	0	0	0
6	0	0	0	0
7	0	0	0	0
8	0	0	0	0
9	0	0	0	0
10	0	0	0	0
Ave.				
1123	0	0	0	0
24	0	0	0	0
25	0	0	0	0
26	0	0	0	0
27	0	0	0	0
28	0	0	0	0
Ave.				
1156	0	0	0	0
57	0	0	0	0
58	0	0	0	0
59	0	0	0	0
1200	0	0	0	0
1	0	0	0	0
Ave.				
1219	0	0	0	0
15	0	0	0	0
16	0	0	0	0
17	0	0	0	0
18	0	0	0	0
19	0	0	0	0
Ave.				

Total time of actual observation 3 hrs. 0 mins.

Number of six minute observations 30

Total of opacity averages (6 minute periods) —

For total observation time, average opacity equals — %

mte/0920Q

Visible Emissions Observation- Long Form

Source Chemstar Lime #49 DC-230 STACK Date 2-15-93 Inspector R.H.

Time	0	15	30	45
1220	0	0	0	0
21	0	0	0	0
22	0	0	0	0
23	0	0	0	0
24	0	0	0	0
25	0	0	0	0
Ave.				
1238	0	0	0	0
39	0	0	0	0
40	0	0	0	0
41	0	0	0	0
42	0	0	0	0
43	0	0	0	0
Ave.				
1306	0	0	0	0
7	0	0	0	0
8	0	0	0	0
9	0	0	0	0
10	0	0	0	0
11	0	0	0	0
Ave.				
1324	0	0	0	0
25	0	0	0	0
26	0	0	0	0
27	0	0	0	0
28	0	0	0	0
29	0	0	0	0
Ave.				
1342	0	0	0	0
43	0	0	0	0
44	0	0	0	0
45	0	0	0	0
46	0	0	0	0
47	0	0	0	0
Ave.				

Time	0	15	30	45
1226	0	0	0	0
27	0	0	0	0
28	0	0	0	0
29	0	0	0	0
30	0	0	0	0
31	0	0	0	0
Ave.				
1244	0	0	0	0
45	0	0	0	0
46	0	0	0	0
47	0	0	0	0
48	0	0	0	0
49	0	0	0	0
Ave.				
1312	0	0	0	0
13	0	0	0	0
14	0	0	0	0
15	0	0	0	0
16	0	0	0	0
17	0	0	0	0
Ave.				
1330	0	0	0	0
31	0	0	0	0
32	0	0	0	0
33	0	0	0	0
34	0	0	0	0
35	0	0	0	0
Ave.				
1348	0	0	0	0
49	0	0	0	0
50	0	0	0	0
51	0	0	0	0
52	0	0	0	0
53	0	0	0	0
Ave.				

Time	0	15	30	45
1232	0	0	0	0
33	0	0	0	0
34	0	0	0	0
35	0	0	0	0
36	0	0	0	0
37	0	0	0	0
Ave.				
1300	0	0	0	0
1	0	0	0	0
2	0	0	0	0
3	0	0	0	0
4	0	0	0	0
5	0	0	0	0
Ave.				
1318	0	0	0	0
19	0	0	0	0
20	0	0	0	0
21	0	0	0	0
22	0	0	0	0
23	0	0	0	0
Ave.				
1336	0	0	0	0
37	0	0	0	0
38	0	0	0	0
39	0	0	0	0
40	0	0	0	0
41	0	0	0	0
Ave.				
1354	0	0	0	0
55	0	0	0	0
56	0	0	0	0
57	0	0	0	0
58	0	0	0	0
59	0	0	0	0
Ave.				

Total time of actual observation 3 hrs. 0 mins.

Number of six minute observations 30

Total of opacity averages (6 minute periods) 0

For total observation time, average opacity equals 0 %

mte/0920Q

(48)

Visible Emissions Observation- Long Form

Source Chemstar Lime, Bancroft, Idaho #48 DC-303 Baghouse Date 2-14-93 Inspector [illegible]

Time	0	15	30	45	Time	0	15	30	45	Time	0	15	30	45
10:15	0	0	0	0	10:21	0	0	0	0	10:27	0	0	0	0
16	0	0	0	0	22	0	0	0	0	28	0	0	0	0
17	0	0	0	0	23	0	0	0	0	29	0	0	0	0
18	0	0	0	0	24	0	0	0	0	30	0	0	0	0
19	0	0	0	0	25	0	0	0	0	31	0	0	0	0
20	0	0	0	0	26	0	0	0	0	32	0	0	0	0
Ave. 0/24 = 0					Ave. 0/24 = 0					Ave. 0/24 = 0				
10:33	0	0	0	0	10:39	0	0	0	0	10:45	0	0	0	0
34	0	0	0	0	40	0	0	0	0	46	0	0	0	0
35	0	0	0	0	41	0	0	0	0	47	0	0	0	0
36	0	0	0	0	42	0	0	0	0	48	0	0	0	0
37	0	0	0	0	43	0	0	0	0	49	0	0	0	0
38	0	0	0	0	44	0	0	0	0	50	0	0	0	0
Ave. 0/24 = 0					Ave. 0/24 = 0					Ave. 0/24 = 0				
10:51	0	0	0	0	10:57	0	0	0	0	11:03	0	0	0	0
52	0	0	0	0	58	0	0	0	0	04	0	0	0	0
53	0	0	0	0	59	0	0	0	0	05	0	0	0	0
54	0	0	0	0	11:00	0	0	0	0	06	0	0	0	0
55	0	0	0	0	01	0	0	0	0	07	0	0	0	0
56	0	0	0	0	02	0	0	0	0	08	0	0	0	0
Ave. 0/24 = 0					Ave. 0/24 = 0					Ave. 0/24 = 0				
11:09	0	0	0	0	11:30	0	0	0	0	11:36	0	0	0	0
10	0	0	0	0	31	0	0	0	0	37	0	0	0	0
11	0	0	0	0	32	0	0	0	0	38	0	0	0	0
12	0	0	0	0	33	0	0	0	0	39	0	0	0	0
13	0	0	0	0	34	0	0	0	0	40	0	0	0	0
14	0	0	0	0	35	0	0	0	0	41	0	0	0	0
Ave. 0/24 = 0					Ave. 0/24 = 0					Ave. 0/24 = 0				
11:42	0	0	0	0	11:48	0	0	0	0	11:54	0	0	0	0
43	0	0	0	0	49	0	0	0	0	55	0	0	0	0
44	0	0	0	0	50	0	0	0	0	56	0	0	0	0
45	0	0	0	0	51	0	0	0	0	57	0	0	0	0
46	0	0	0	0	52	0	0	0	0	58	0	0	0	0
47	0	0	0	0	53	0	0	0	0	59	0	0	0	0
Ave. 0/24 = 0					Ave. 0/24 = 0					Ave. 0/24 = 0				

Total time of actual observation 3 hrs. 0 mins.

Number of six minute observations 30

Total of opacity averages (6 minute periods) ~~[illegible]~~

For total observation time, average opacity equals ——— %

mte/0920Q

Visible Emissions Observation- Long Form

Source Chemstar Lime, Bancroft, Idaho Date 2-14-93 Inspector [illegible]

0 C-303 Baghouse

Time	0	15	30	45	Time	0	15	30	45	Time	0	15	30	45
12:00	0	0	0	0	12:06	0	0	0	0	12:12	0	0	0	0
01	0	0	0	0	07	0	0	0	0	13	0	0	0	0
02	0	0	0	0	08	0	0	0	0	14	0	0	0	0
03	0	0	0	0	09	0	0	0	0	15	0	0	0	0
04	0	0	0	0	10	0	0	0	0	16	0	0	0	0
05	0	0	0	0	11	0	0	0	0	17	0	0	0	0
Ave. 0/24 = 0					Ave. 0/24 = 0					Ave. 0/24 = 0				
12:18	0	0	0	0	12:24	0	0	0	0	12:40	0	0	0	0
19	0	0	0	0	25	0	0	0	0	41	0	0	0	0
20	0	0	0	0	26	0	0	0	0	42	0	0	0	0
21	0	0	0	0	27	0	0	0	0	43	0	0	0	0
22	0	0	0	0	28	0	0	0	0	44	0	0	0	0
23	0	0	0	0	29	0	0	0	0	45	0	0	0	0
Ave. 0/24 = 0					Ave. 0/24 = 0					Ave. 0/24 = 0				
12:46	0	0	0	0	12:52	0	0	0	0	12:58	0	0	0	0
47	0	0	0	0	53	0	0	0	0	59	0	0	0	0
48	0	0	0	0	54	0	0	0	0	1:00	0	0	0	0
49	0	0	0	0	55	0	0	0	0	01	0	0	0	0
50	0	0	0	0	56	0	0	0	0	02	0	0	0	0
51	0	0	0	0	57	0	0	0	0	03	0	0	0	0
Ave. 0/24 = 0					Ave. 0/24 = 0					Ave. 0/24 = 0				
1:04	0	0	0	0	1:10	0	0	0	0	1:16	0	0	0	0
05	0	0	0	0	11	0	0	0	0	17	0	0	0	0
06	0	0	0	0	12	0	0	0	0	18	0	0	0	0
07	0	0	0	0	13	0	0	0	0	19	0	0	0	0
08	0	0	0	0	14	0	0	0	0	20	0	0	0	0
09	0	0	0	0	15	0	0	0	0	21	0	0	0	0
Ave. 0/24 = 0					Ave. 0/24 = 0					Ave. 0/24 = 0				
1:22	0	0	0	0	1:28	0	0	0	0	1:34	0	0	0	0
23	0	0	0	0	29	0	0	0	0	35	0	0	0	0
24	0	0	0	0	30	0	0	0	0	36	0	0	0	0
25	0	0	0	0	31	0	0	0	0	37	0	0	0	0
26	0	0	0	0	32	0	0	0	0	38	0	0	0	0
27	0	0	0	0	33	0	0	0	0	39	0	0	0	0
Ave. 0/24 = 0					Ave. 0/24 = 0					Ave. 0/24 = 0				

Total time of actual observation 3 hrs. 0 mins.

Number of six minute observations 30

Total of opacity averages (6 minute periods) 0/30 = 0

For total observation time, average opacity equals 0 %

mte/0920Q

American Environmental Testing Company, Inc.
505 South Birch Drive
Spanish Fork, Utah 84660
801-266-7111

DC=316

Visible Emission Field Documentation

SOURCE NAME: Chemstar Lime		
LOCATION: Bancroft Idaho		
MAILING ADDRESS	CITY	STATE & ZIP
PHONE #	SOURCE CONTACT	
OBSERVATION DATE: 2-15-93	START TIME: 1130	STOP TIME: 1136
PROCESS EQUIPMENT: Vertical Kiln	FUEL TYPE: NG	OPERATING MODE: 90% +
CONTROL EQUIPMENT: Baghouse		OPERATING MODE: Full
DESCRIBE EMISSION POINT: Circle Stack		
HEIGHT ABOVE GROUND LEVEL: 120 Feet	HEIGHT RELATIVE TO OBSERVER: 100 Feet	
DISTANCE FROM OBSERVER: 300 feet	DIRECTION FROM OBSERVER: ~~East~~ West	
DESCRIBE EMISSIONS		
EMISSION COLOR: Light Tan	PLUME TYPE: CONTINUOUS ☒ FUGITIVE ☐ INTERMITTENT ☒	
WATER DROPLETS PRESENT: NO ☒ YES ☐	IF WATER DROPLET PLUME: ATTACHED ☐ DETACHED ☐	
Point in the Plume at Which Opacity was Determined: 150 feet Aft Steam Plume		
DESCRIBE BACKGROUND (Color, etc.): Sky Blue		
SKY CONDITIONS AND COLOR: Blue	WIND DIRECTION: NE	WIND SPEED: 5
AMBIENT TEMPERATURE: 25°	WET BULB TEMP.	RH. percent

SEC / MIN	0	15	30	45
1	0	0	0	0
2	5	0	0	0
3	0	0	0	0
4	0	0	5	0
5	5	0	0	0
6	0	5	0	0
7				
8				
9				
10				
11				
12				
13				
14				
15				
16				
17				
18				
19				
20				
21				
22				
23				
24				
25				
26				
27				
28				
29				
30				

AVERAGE OPACITY FOR HIGHEST PERIOD: 20/24 = .833%

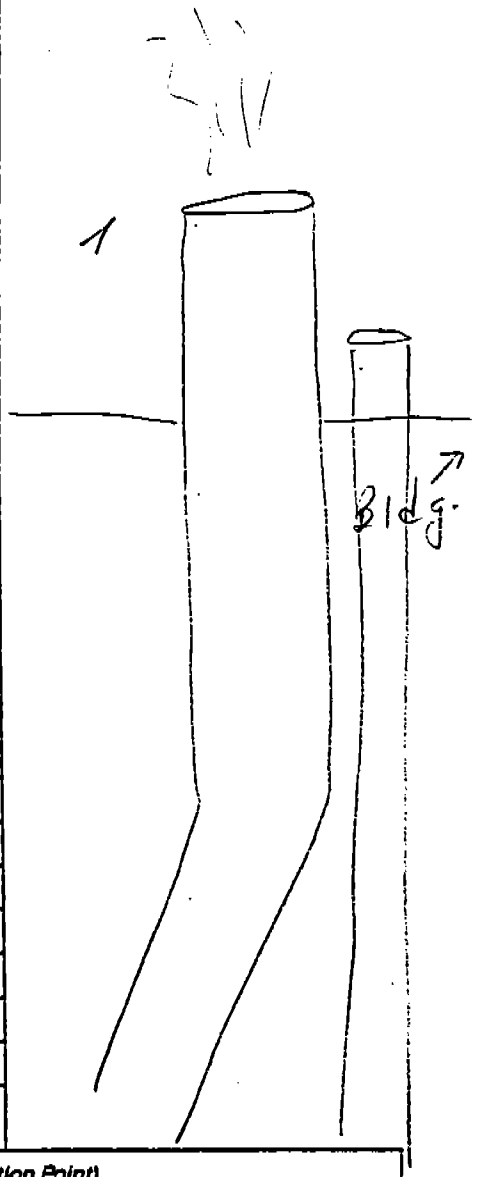

COMMENTS (Describe Observation Point)

SOURCE LAYOUT SKETCH

Stack with Plume
Sun
Wind

Draw North Arrow

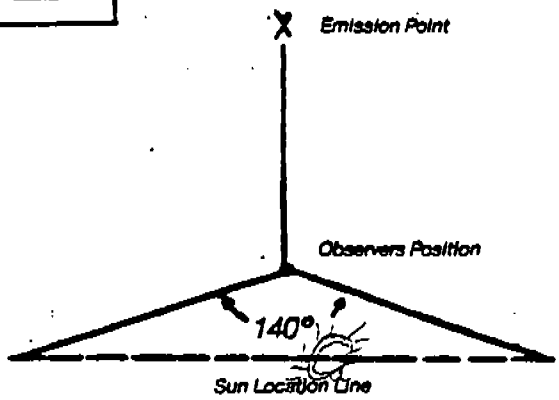

OBSERVER'S NAME (Print): Rick Hawkins		
OBSERVER'S SIGNATURE: Rick Hawkins	DATE: 2-15-93	
ORGANIZATION: American Environmental Testing	CERTIFIED BY: UDEQ	DATE: 5-24

American Environmental Testing Company, Inc.
Spanish Fork, Utah 84660
801-266-7111

Visible Emission Field Documentation

SOURCE NAME: Chemstar Lime		
LOCATION: Bancroft Idaho		
MAILING ADDRESS	CITY	STATE & ZIP
PHONE #	SOURCE CONTACT	
OBSERVATION DATE: 2-15-93	START TIME: 1504	STOP TIME: 1510
PROCESS EQUIPMENT: Vertical Kiln	FUEL TYPE: NG	OPERATING MODE: 90% +
CONTROL EQUIPMENT: Baghouse		OPERATING MODE: Full
DESCRIBE EMISSION POINT: Cole Stack		
HEIGHT ABOVE GROUND LEVEL: 120 feet	HEIGHT RELATIVE TO OBSERVER: 100 feet	
DISTANCE FROM OBSERVER: 280 feet	DIRECTION FROM OBSERVER: North ~~East~~ West	
DESCRIBE EMISSIONS		
EMISSION COLOR: Light Tan	PLUME TYPE: CONTINUOUS ☐ FUGITIVE ☐ INTERMITTENT ☑	
WATER DROPLETS PRESENT: NO ☑ YES ☐	IF WATER DROPLET PLUME: ATTACHED ☐ DETACHED ☐	
Point in the Plume at Which Opacity was Determined: 150 feet after Steam Plume		
DESCRIBE BACKGROUND (Color, etc.): Blue Sky		
SKY CONDITIONS AND COLOR: Blue	WIND DIRECTION: N	WIND SPEED: 5
AMBIENT TEMPERATURE: 30	WET BULB TEMP.	RH. percent

SEC / MIN	0	15	30	45
1	0	0	0	0
2	0	0	0	0
3	5	0	5	0
4	0	0	0	0
5	5	0	0	5
6	0	0	0	0
7				
8				
9				
10				
11				
12				
13				
14				
15				
16				
17				
18				
19				
20				
21				
22				
23				
24				
25				
26				
27				
28				
29				
30				

20/24 = .833%

AVERAGE OPACITY FOR HIGHEST PERIOD

COMMENTS (Describe Observation Point)

Stack with Plume
Sun
Wind

SOURCE LAYOUT SKETCH

Draw North Arrow

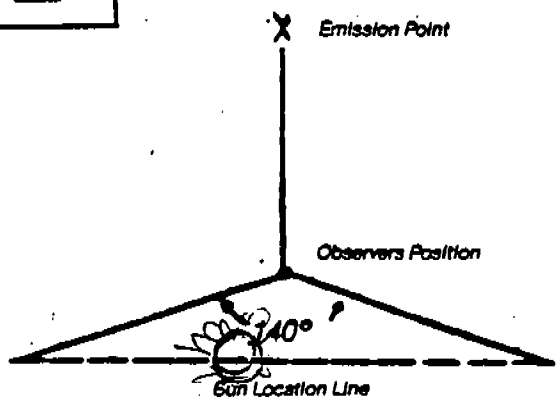

OBSERVER'S NAME (Print): Rick Hawkins		
OBSERVER'S SIGNATURE: Rick Hawkins	DATE: 2-15-93	
ORGANIZATION: American Environmental Testing	CERTIFIED BY: UDEQ	DATE: 5-24

esting Company, Inc.
Spanish Fork, Utah 84660
801-266-7111

Visible Emission Field Documentation

SOURCE NAME	Chemstar Lime
LOCATION	Bancroft Idaho
MAILING ADDRESS / CITY / STATE & ZIP	
PHONE # / SOURCE CONTACT	
OBSERVATION DATE	2-15-93
START TIME	1635
STOP TIME	1641
PROCESS EQUIPMENT	Vertical Kiln
FUEL TYPE	NG
OPERATING MODE	90% +
CONTROL EQUIPMENT	Baghouse
OPERATING MODE	Full
DESCRIBE EMISSION POINT	Circle Stack
HEIGHT ABOVE GROUND LEVEL	140 feet
HEIGHT RELATIVE TO OBSERVER	120 feet
DISTANCE FROM OBSERVER	280 feet
DIRECTION FROM OBSERVER	NE
DESCRIBE EMISSIONS	
EMISSION COLOR	Light Tan
PLUME TYPE: CONTINUOUS ☐ FUGITIVE ☐ INTERMITTENT ☑	
WATER DROPLETS PRESENT: NO ☑ YES ☐	
IF WATER DROPLET PLUME: ATTACHED ☐ DETACHED ☐	
Point in the Plume at Which Opacity was Determined	100 feet after Steam Plume
DESCRIBE BACKGROUND (Color, etc.)	Light Snow and Gray
SKY CONDITIONS AND COLOR	Gray
WIND DIRECTION	NE
WIND SPEED	5
AMBIENT TEMPERATURE	26
WET BULB TEMP.	
RH. percent	

SEC / MIN	0	15	30	45
1	0	0	0	0
2	5	0	0	0
3	5	0	0	5
4	5	0	0	5
5	0	0	5	0
6	0	0	0	0
7				
8				
9				
10				
11				
12				
13				
14				
15				
16				
17				
18				
19				
20				
21				
22				
23				
24				
25				
26				
27				
28				
29				
30				

$25/24 = 1.04166\%$

AVERAGE OPACITY FOR HIGHEST PERIOD

COMMENTS (Describe Observation Point)

Stack with Plume
Sun
Wind

SOURCE LAYOUT SKETCH

Draw North Arrow

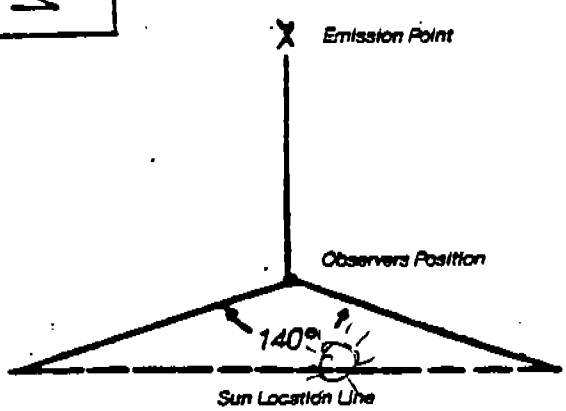

OBSERVER'S NAME (Print)	Rick Hawkins
OBSERVER'S SIGNATURE	Rick Hawkins
DATE	
ORGANIZATION	American Environmental Testing
CERTIFIED BY	UDEQ
DATE	5-24

STATE OF UTAH
DIVISION OF AIR QUALITY

This certifies that Rick Hawkins

has successfully completed the Visible Emissions Evaluation Course conducted by the Division of Air Quality and has met the minimum requirements necessary to evaluate visible emissions, according to EPA Method 9.

J. Burnell Cochran

Director, Division of Air Quality

Valid until MAY 2 3 1993

STATE OF UTAH
DIVISION OF AIR QUALITY

This certifies that V. Brent Benson

has successfully completed the Visible Emissions Evaluation Course conducted by the Division of Air Quality and has met the minimum requirements necessary to evaluate visible emissions, according to EPA Method 9.

J. Burnell Cochran

Director, Division of Air Quality

Valid until APR 1 4 1993

STATE OF UTAH
DIVISION OF AIR QUALITY

This certifies that Todd Benson

has successfully completed the Visible Emissions Evaluation Course conducted by the Division of Air Quality and has met the minimum requirements necessary to evaluate visible emissions, according to EPA Method 9.

J. Burnell Cochran

Director, Division of Air Quality

Valid until MAY 2 3 1993

STATE OF UTAH
DIVISION OF AIR QUALITY

This certifies that Greg Johnson

has successfully completed the Visible Emissions Evaluation Course conducted by the Division of Air Quality and has met the minimum requirements necessary to evaluate visible emissions, according to EPA Method 9.

J. Burnell Cochran

Director, Division of Air Quality

Valid until APR 1 4 1993

Appendix "H"
(Calibration Data)

American Environmental Testing Company Inc.

801-266-7111

American Environmental Testing Company, Inc.

565 South Birch Drive

Spanish Fork, Utah 84660

(801) 266-7111

RAC

Company: Christian Fence Date: 2-12-93

Source: DC-120 Calibrated By: [illegible]

NOZZLE CALIBRATION

Nozzle Identification Number	D_1 (in.)	D_2 (in.)	D_3 (in.)	ΔD (in.)	D average
3/16" - #2	0.191	0.191	0.191	0.000	0.191
3/16" - #2	0.191	0.191	0.191	0.000	0.191
3/16" - #2	0.191	0.191	0.191	0.000	0.191

Where:

$D_{1,2,3}$ = Nozzle diameter measured on a different diameter, (in.).
Tolerance = measure within 0.001 inches (0.25 mm).

ΔD = Maximum difference in any two measurements, (in.).
Tolerance =0.004 inches (0.1 mm).

D average = Average of D_1, D_2, D_3.

American Environmental Testing Company, Inc.

565 South Birch Drive

Spanish Fork, Utah 84660

(801) 266-7111

CR

Company: CHEMSTAR Lime Date: 2/12-93

Source: DC-123 2° Cyclone Screen Calibrated By: [illegible]

NOZZLE CALIBRATION

Test	Nozzle Identification Number	D1 (in.)	D2 (in.)	D3 (in.)	ΔD (in.)	D average
1	3/16 - #9	0.188	0.187	0.189	0.002	0.188
2	3/16 - #9	0.188	0.187	0.189	0.002	0.188
3	3/16 - #9	0.187	0.189	0.188	0.002	0.188

Where:

$D_{1,2,3}$ = Nozzle diameter measured on a different diameter, (in.).
Tolerance = measure within 0.001 inches (0.25 mm).

ΔD = Maximum difference in any two measurements, (in.).
Tolerance =0.004 inches (0.1 mm).

D average = Average of D_1, D_2, D_3.

American Environmental Testing Company, Inc.

565 South Birch Drive
Spanish Fork, Utah 84660
(801) 266-7111

Company: Chemstar Date: 2/13/93

Source: DC-126 RAC Calibrated By: BAC

NOZZLE CALIBRATION

Nozzle Identification Number	D_1 (in.)	D_2 (in.)	D_3 (in.)	ΔD (in.)	D average
3/16 #2	0.191	0.191	0.191	0.000	0.191
3/16 #2	0.191	0.191	0.191	0.000	0.191
3/16 #2	0.191	0.191	0.191	0.000	0.191

Where:

$D_{1,2,3}$ = Nozzle diameter measured on a different diameter, (in.).
Tolerance = measure within 0.001 inches (0.25 mm).

ΔD = Maximum difference in any two measurements, (in.).
Tolerance =0.004 inches (0.1 mm).

D average = Average of D_1, D_2, D_3.

American Environmental Testing Company, Inc.

565 South Birch Drive

Spanish Fork, Utah 84660

(801) 266-7111

Company: Chemetar Lime Co. Bancroft, Idaho. Date: 2/13-93

Source: DC-129 Tenoile Plant. Calibrated By: [illegible] TD Shiller.

NOZZLE CALIBRATION

Test.	Nozzle Identification Number	D_1 (in.)	D_2 (in.)	D_3 (in.)	ΔD (in.)	D average
1	3/16" - #9	0.188	0.187	0.189	0.002	0.188
2	3/16" - #9	0.188	0.187	0.188	0.001	0.1877
3	3/16" - #9	0.188	0.187	0.189	0.002	0.188

Where:

$D_{1,2,3}$ = Nozzle diameter measured on a different diameter, (in.).
Tolerance = measure within 0.001 inches (0.25 mm).

ΔD = Maximum difference in any two measurements, (in.).
Tolerance =0.004 inches (0.1 mm).

D average = Average of D_1, D_2, D_3.

American Environmental Testing Company, Inc.

565 South Birch Drive

Spanish Fork, Utah 84660

(801) 266-7111

Company: Chemstar Lime Co. Bancroft, Idaho.

Date: 2/15-93

Source: DC-230 Baghouse stack.

Calibrated By: [illegible]

NOZZLE CALIBRATION

Test.	Nozzle Identification Number	D_1 (in.)	D_2 (in.)	D_3 (in.)	ΔD (in.)	D average
1	1/4" - #2	0.245	0.244	0.244	0.001	0.2443
2	1/4 # - 2	0.245	0.244	0.243	0.002	0.244
3	1/4 - #2	0.245	0.244	0.243	0.002	0.244

Where:

$D_{1,2,3}$ = Nozzle diameter measured on a different diameter, (in.).
Tolerance = measure within 0.001 inches (0.25 mm).

ΔD = Maximum difference in any two measurements, (in.).
Tolerance =0.004 inches (0.1 mm).

D average = Average of D_1, D_2, D_3.

American Environmental Testing Company, Inc.

565 South Birch Drive

Spanish Fork, Utah 84660

(801) 266-7111

Company: CHEMSTAR Lime Co. Bancroft, Idaho. Date: 2/14-93

Source: QC-303 Calibrated By: [illegible]

NOZZLE CALIBRATION

Test	Nozzle Identification Number	D_1 (in.)	D_2 (in.)	D_3 (in.)	ΔD (in.)	D average
1	1/4-#3.	0.243	0.241	0.242	0.002	0.242
2	1/4-#3.	0.243	0.241	0.241	0.002	0.2417
3	1/4-#3.	0.243	0.241	0.241	0.002	0.2417

Where:

$D_{1,2,3}$ = Nozzle diameter measured on a different diameter, (in.).
Tolerance = measure within 0.001 inches (0.25 mm).

ΔD = Maximum difference in any two measurements, (in.).
Tolerance =0.004 inches (0.1 mm).

D average = Average of D_1, D_2, D_3.

American Environmental
Testing Company, Inc.
565 South Birch Drive
Spanish Fork, Utah 84660
801-266-7111

Chemstar Fine
DC-316
Bancroft, Idaho

NOZZLE CALIBRATION

Date 2-15-93 Calibrated by [illegible]

Nozzle identification number	D_1, mm, (in.)	D_2, mm, (in.)	D_3, mm, (in.)	ΔD, mm, (in.)	D_{avg}
CR #1 3/16" - #9	0.188	0.188	0.188	0.000	0.188
#2 3/16" - #9	0.188	0.188	0.188	0.000	0.188
#3 3/16" - #9	0.188	0.188	0.188	0.000	0.188

where:

$D_{1,2,3}$ = nozzle diameter measured on a different diameter, mm (in.).
Tolerance = measure within 0.25 mm (0.001 in.).

ΔD = maximum difference in any two measurements, mm (in.).
Tolerance = 0.1 mm (0.004 in.).

D_{avg} = average of D_1, D_2, D_3.

American Environmental Testing Company, Inc.
565 South Birch Drive Spanish Fork, Utah 84660
(801) 798-8553 (801) 256-7111

Pitot Tube Calibration Form

Tube Identification Number: 6" - A

Date: 9/3/92

rated By: VBB - RH

"A" Side Calibration

Run Number	P std cm H20 (inches H20)	P s cm H20 (inches H20)	Cp (S)	Deviation
1	0.252	0.356	0.8413	-0.00009
2	0.254	0.359	0.8411	-0.00030
3	0.253	0.357	0.8418	0.00039
		Average:	**0.8414**	

"B" Side Calibration

Run Number	P std cm H20 (inches H20)	P s cm H20 (inches H20)	Cp (S)	Deviation
1	0.25	0.353	0.8416	0.00037
2	0.25	0.353	0.8416	0.00037
3	0.255	0.361	0.8405	-0.00073
		Average:	**0.8412**	

A & B Average = **0.8413**

American Environmental Testing Company, Inc.
565 South Birch Drive Spanish Fork, Utah 84660
(801) 798-8553 (801) 266-7111

Pitot Tube Calibration Form

:ot Tube Identification Number: 4' - C

Date: 9/3/92

alibrated By: BAL - TBB

"A" Side Calibration

Run Number	P std cm H20 (inches H20)	P s cm H20 (inches H20)	Cp (S)	Deviation
1	0.28	0.397	0.8398	0.00003
2	0.277	0.393	0.8395	-0.00024
3	0.278	0.394	0.8400	0.00021
		Average:	**0.8398**	

"B" Side Calibration

Run Number	P std cm H20 (inches H20)	P s cm H20 (inches H20)	Cp (S)	Deviation
1	0.267	0.379	0.8393	-0.00012
2	0.265	0.376	0.8395	0.00006
3	0.265	0.376	0.8395	0.00006
		Average:	**0.8395**	

A & B Average = **0.8396**

American Enviornmental Testing Company, Inc.
565 South Birch Drive
Spanish Fork, Utah 84660
(801) 266-7111

Balance Calibration Data Form

Balance Name: Sartorius - A 200 S (Analytic) Number: 35120053

Balance Name: Sartorius - U 3600 (Top Loader) Number: 35120087

Classification of Standard Weights: Type "S" W.B.S.

Date	0.500 g	1.0000 g	10.0000 g	50.0000 g	100.0000 g	Analyst
	A 200 S					
4/1/86	0.5001	0.9999	10.0001	50.0001	100.0001	V.B.B.
4/1/87	0.5000	1.0000	10.0001	49.9999	100.0001	V.B.B.
1/7/88	0.5000	1.0001	10.0000	50.0000	100.0000	V.B.B.
8/5/88	0.5001	1.0000	10.0001	49.9999	100.0001	V.B.B.
2/24/89	0.5000	0.9999	10.0001	50.0001	100.0000	S.A.S.
9/1/89	0.5001	0.9999	10.0001	50.0000	100.0002	V.B.B.-G.E.J.
3/5/90	0.5000	0.9999	10.0001	50.0002	100.0002	V.B.B.-J.P.B.
9/10/90	0.5001	0.9999	10.0001	50.0001	100.0002	V.B.B.-B.A.L.
3/15/91	0.5001	0.9999	10.0001	50.0002	100.0002	V.B.B.-T.B.B.
9/5/91	0.5000	0.9999	10.000	50.0001	100.0001	B.A.L.
3/3/92	0.5000	0.9999	10.0001	50.0001	100.0002	B.A.L.
9/3/92	0.5000	0.9999	10.000	50.0001	100.0001	T.B.B.
	U 3600					
4/1/86	0.5	1.0	10.0	50.0	100.0	V.B.B.
4/1/87	0.5	1.0	10.0	49.9	100.1	V.B.B.
1/7/88	0.5	1.1	10.0	50.0	100.0	V.B.B.
8/5/88	0.5	1.0	10.1	50.0	100.0	V.B.B.
2/24/89	0.5	1.0	10.1	49.9	100.1	S.A.S.
9/1/89	0.5	1.1	10.0	49.9	100.0	V.B.B.-G.E.J.
3/5/90	0.5	1.0	10.1	49.9	100.1	V.B.B.-J.P.B.
9/10/90	0.5	1.0	10.1	50.0	100.1	V.B.B.-B.A.L.
3/15/91	0.5	1.0	10.1	49.9	100.1	V.B.B.-T.B.B.
9/5/91	0.5	1.0	10.0	50.0	100.1	B.A.L.
3/3/92	0.5	1.0	10.1	50.0	100.1	B.A.L.
9/3/92	0.5	1.0	10.0	50.0	100.0	T.B.B.

American Environmental Testing Company, Inc.
565 South Birch Drive Spanish Fork, Utah 84660
(801) 798-3553 (801) 266-7111

Stack Temperature Sensor Calibration Form

Thermocouple Number: #1 Digital -# 2 Omega

Date: 9/3/92

Barometric Pressure: 24.89

Calibrated By: JPB - DH

Reference: ERTCO - Mg - Glass

	Reference Point Number	Source a (specify)	Reference Thermometer Temperature °C	Thermocouple Potentiometer Temperature °C	Temperature Difference b %
	a)	Ice Water	42	41	0.32
#1	b)	Hot H20	161	161	0.00
Digital	c)	Boiling H20	208	209	-0.21
	d)	Warm Oil	242	241	0.19
	e)	Hot Oil	322	322	0.00
	f)	Boiling Oil	455	454	0.14
	a)	Ice Water	44	42	0.63
#2	b)	Hot H20	174	175	-0.22
Omega	c)	Boiling H20	211	212	-0.21
	d)	Warm Oil	245	244	0.19
	e)	Hot Oil	325	324	0.17
	f)	Boiling Oil	357	357	0.00

a Type of calibration system used.

b $\frac{(\text{reference temp. °C} + 273) - (\text{test thermometer temp. °C} + 273)}{\text{reference temperature °C} + 273} * 100 < 1.5\%$

American Environmental Testing Company, Inc.
565 South Birch Drive Spanish Fork, Utah 84660
(801) 798-8553 (801) 266-7111

Sample Box Temperature Sensor Calibration Form

Sample Box Number: CR#1A - UTA #2C - RAC #1A

Date: 9/3/92

Barometric Pressure: 24.88

Calibrated By: JPB - DH

Reference: ERTCO - 105 - SNBS

	Reference Point Number	Source a (specify)	Reference Thermometer Temperature °C	Thermocouple Potentiometer Temperature °C	Temperature Difference b %
	3	Oven On	235	234	0.20
CR	4	Oven On	261	260	0.19
#1A	2	Oven On	154	154	0.00
	1	Cold H20	44	45	-0.32
	8	Oven On	81	81	0.00
	7	Oven On	78	79	-0.28
	3	Oven On	266	266	0.00
UTA	4	Oven On	244	245	-0.19
#2C	2	Oven On	143	142	0.24
	1	Cold H20	48	49	-0.31
	8	Oven On	93	92	0.27
	7	Oven On	96	96	0.00
	3	Oven On	248	247	0.19
RAC	4	Oven On	238	237	0.20
#1A	2	Oven On	151	151	0.00
	1	Cold H20	43	44	-0.32
	8	Oven On	78	78	0.00
	7	Oven On	82	81	0.28

a Type of calibration system used.

b $\frac{\text{(reference temp. °C + 273) - (test thermometer temp. °C + 273)}}{\text{reference temperature °C + 273}} * 100 < 1.5\%$

American Environmental Testing Company, Inc.
565 South Birch Drive Spanish Fork, Utah 84660
(801) 798-8553 (801) 256-7111

Meter Box Calibration Data Form
(English Units)

Date	Barometric Pressure	Meter Box Number
9/3/92	24.88	RAC #145-569

Average Yi	Average ΔH	Calibrated By
1.002	1.815	DFH - JPB

Orifice Manometer Setting ΔH	Wet Test Meter (Vw) Ft3	Dry Gas Meter (Vd) Ft3	Wet Test Meter (Tw) °F	ΔH/13.6	Wet Test Meter Average Temp.
0.50	5.065	5.111	77	0.03676	77.5
			78		
1.00	5.011	5.078	78	0.07353	78.5
			79		
1.50	10.009	10.239	80	0.11029	80
			80		
2.00	10.021	10.361	81	0.14706	81.5
			82		
3.00	10.005	10.445	84	0.22059	84
			84		
4.00	10.027	10.584	85	0.29412	86
			87		

Dry Gas Meter Inlet (Td i) °F	Dry Gas Meter Outlet (Td o) °F	Dry Gas Meter Average (Td) °F	Time Ø Minutes	Yi	ΔH
84	84	84.00	11.73	1.0015	1.8146
84	84				
86	87	88.00	8.22	1.0013	1.8142
88	91				
93	96	95.75	13.46	1.0016	1.8135
95	99				
99	104	104.25	11.73	1.0019	1.8144
105	109				
108	115	114.00	9.6	1.0018	1.8144
115	118				
121	123	124.25	8.38	1.0019	1.8164
126	127				
				Average Yi	Average ΔH
				1.0017	1.8146

American Environmental Testing Company, Inc.
565 South Birch Drive Spanish Fork, Utah 84660
(801) 798-8553 (801) 266-7111

Meter Box Calibration Data Form
(English Units)

Date	Barometric Pressure	Meter Box Number
9/3/92	24.89	CR #1(097)

Average Yi	Average ΔH	Calibrated By
1.142	2.116	VBB - BAL

rifice Manometer Setting ΔH	Wet Test Meter (Vw) Ft3	Dry Gas Meter (Vd) Ft3	Wet Test Meter (Tw) °F	ΔH/13.6	Wet Test Meter Average Temp.
0.50	5.025	4.481	70	0.03676	70
			70		
1.00	5.105	4.524	71	0.07353	72
			73		
1.50	10.287	9.125	73	0.11029	74
			75		
2.00	10.034	8.845	77	0.14706	77.5
			78		
3.00	10.023	8.802	79	0.22059	79.5
			80		
[illegible].00	10.324	9.031	82	0.29412	82
			82		

Inlet (Td i) °F	Dry Gas Meter Outlet (Td o) °F	Average (Td) °F	Time Ø Minutes	Yi	ΔH
80	80	80.00	12.7	1.1409	2.1159
80	80				
80	81	80.75	9.1	1.1436	2.1181
81	81				
82	83	82.50	14.94	1.1402	2.1180
82	83				
83	85	84.50	12.55	1.1425	2.1143
84	86				
85	87	86.25	10.21	1.1428	2.1125
85	88				
87	88	88.00	9.09	1.1423	2.1171
87	90				
				Average Yi	Average ΔH
				1.1421	2.1160

Scott Specialty Gases, Inc.

Shipped From: 500 WEAVER PARK RD
LONGMONT CO 80501
Phone: 303-442-4700 Fax: 303-772-7673

CERTIFICATE OF ANALYSIS

AMERICAN ENV TESTING
565 S. BIRCH DRIVE
SPANISH FORK UT 84660

PROJECT #: 08-08394
PO#: 92-1171X-SC
ITEM #: 08023743 4AL
DATE: 8/10/92

CYLINDER #: ALM018308
FILL PRESSURE: 2000 PSIG

ANALYTICAL ACCURACY: +/- 2%

COMPONENT	REQUESTED GAS CONC MOLES		ANALYSIS (MOLES)	
SULFUR DIOXIDE	10.	PPM	10.2	PPM
NITROGEN		BAL		BAL

CGA 660 2000 PSIG
ONE ANALYSIS ONLY !!!

QC # 22129208
NO GUARANTEE OF STABILITY !!!

ANALYST: Susan J. Brandon
SUSAN J. BRANDON

APPROVED BY: RS
RIC SCHMELTEKOPF

Scott Specialty Gases, Inc.

Shipped From: 500 WEAVER PARK RD
LONGMONT CO 80501
Phone: 303-442-4700 Fax: 303-772-7673

CERTIFICATE OF ANALYSIS

AMERICAN ENV TESTING

565 S. BIRCH DRIVE

SPANISH FORK UT 84660

PROJECT #: 08-08394
PO#: 92-1171X-SC
ITEM #: 08023740 4AL
DATE: 8/10/92

CYLINDER #: ALM025992
FILL PRESSURE: 2000 PSIG

ANALYTICAL ACCURACY: +/- 2%

COMPONENT	REQUESTED GAS CONC MOLES		ANALYSIS (MOLES)	
SULFUR DIOXIDE	5.	PPM	5.0	PPM
NITROGEN		BAL		BAL

CGA 660 2000 PSIG
ONE ANALYSIS ONLY !!!

QC # 22129207
NO GUARANTEE OF STABILITY !!!

ANALYST: Susan J. Brandon
SUSAN J. BRANDON

APPROVED BY: RB
RIC SCHMELTEKOPF

Scott Specialty Gases, Inc.

Shipped From: 500 WEAVER PARK RD
LONGMONT CO 80501
Phone: 303-442-4700 Fax: 303-772-7673

CERTIFICATE OF ANALYSIS

AMERICAN ENV TESTING

565 S. BIRCH DRIVE

SPANISH FORK UT 84660

PROJECT #: 08-08394
PO#: 92-1171X-SC
ITEM #: 08023742 4AL
DATE: 8/10/92

CYLINDER #: ALM012461
FILL PRESSURE: 2000 PSIG

ANALYTICAL ACCURACY: +/- 2%

COMPONENT	REQUESTED GAS CONC	MOLES	ANALYSIS (MOLES)	
SULFUR DIOXIDE	2.	PPM	2.0	PPM
NITROGEN		BAL		BAL

CGA 660 2000 PSIG
ONE ANALYSIS ONLY !!!

QC # 22129206
NO GUARANTEE OF STABILITY !!!

ANALYST: Susan J Brandon
SUSAN J BRANDON

APPROVED BY: R
RIC SCHMELTEKOPF

600 WE[illegible] PARK ROAD, LONGMONT, COLORADO 80501 (303) 442-47[illegible] Fax (303) 772-7873

Shipped From : Scott Colorado
Date Shipped : 8-10-92
Our Project # : 0808188
Your P.O. # : VERBAL
Page 1 of 1
Expiration Date : 01/29/94

tomer : AMERICAN ENV TESTING
565 S. BIRCH DRIVE
SPANISH FORK UT 84660

**** CERTIFICATE OF ANALYSIS - EPA PROTOCOL GASES ****

Certified Per Traceability Protocol # 1 — Section 3.0.4

Certified Accuracy 1 % NIST Traceable — File # AETIKCO

Cylinder Number AAL-20710
Cylinder Pressure 2000 psig
COA Fitting 350
QC Number 22069220

REFERENCE STDS				GAS ANALYZER		
OMPONENT	CERTIFIED CONC.	SRM # (CRM #)	CYLINDER NUMBER	CONC.	MAKE/MODEL	LAST CALIBRATION DATE	ANALYTICAL PRINCIPLE
ON MONOXIDE	662.3 PPM	1601	CAL-7908	970.20 PPM	HORIBA AIA 24[illegible] 56416307[illegible]	07/09/92	NON-DISPERSIVE INFRARED
		GMIS*	IL-1219	541.80 PPM			
		1600	ALM-013327	475.00 PPM			

ANCE GAS : NITROGEN

CERTIFIED EPA PROTOCOL

FIRST ANALYSIS — DATE : 07/21/92

RO S (mV)	TEST GAS (mV)	RESULTS PPM	REFERENCE GAS CONC.	(mV)	RESULTS PPM	ZERO GAS (mV)
00	1.052	663.11	541.80 PPM	0.902	543.44	0.00
00	1.052	663.11		0.902	543.44	0.00
00	1.052	663.11		0.902	543.44	0.00

CALCULATED RESULTS 661.93, 661.93, 661.93

AVERAGE : 661.93 PPM

SECOND ANALYSIS — DATE : 07/29/92

TEST GAS (mV)	RESULTS PPM	REFERENCE GAS CONC.	(mV)	RESULTS PPM
1.053	663.94	541.80 PPM	0.902	543.44
1.053	663.94		0.902	543.44
1.053	663.94		0.902	543.44
	52.30			

CALCULATED RESULTS 662.77, 662.77, 662.77

AVERAGE : 662.77 PPM

CALIBRATION CURVE — 2 nd DEGREE

SRM # (CRM #)	CONC. PPM	SPLIT PT (%)	OVM (mV)	FITTED VALUE	PERCENT ERROR
1607	970.20	100	1.308	970.20	0.00
	873.18	90	1.204	869.54	-0.42
	776.16	80	1.102	775.86	-0.04
	679.14	70	1.072	679.46	0.05
	582.12	60	0.952	581.89	-0.04
	485.10	50	0.821	483.18	-0.40
	388.08	40	0.683	388.06	-0.01
1605	475.00	LOW	0.806	472.54	-0.52
N/A	541.80	GMIS*	0.902	543.44	0.30

GMIS - GAS MANUFACTURER'S INTERNAL STANDARD

Analyst : Susan J. Brandon
SUSAN J. BRANDON

Approved By : RS
RIC SCHNELTEKOPF

Specialty Gases

500 WEAVER PARK ROAD, LONGMONT, COLORADO 80501 (303) 442-4700 Fax (303) 772-7673

Shipped From : Scott Co
Date Shipped : 3-25
Our Project # : 0807254
Your P.O. # : ELP92113
Page 3 of 3
Expiration Date : 09/24/93

Customer : AMERICAN ENVIRONMENTAL TESTING
ATTN. BRENT BENSON
565 SOUTH BIRCH DRIVE
SPANISH FORK UT 84660

**** CERTIFICATE OF ANALYSIS - EPA PROTOCOL GASES ****

Certified Per Traceability Protocol # 1 — Section 3.0.4

Certified Accuracy 1 % NIST Traceable — File # AET150NO

Cylinder Number BLH-0026
Cylinder Pressure 2000
CGA Fitting 660
QC Number 13249209

COMPONENT	CERTIFIED CONC.
NITRIC OXIDE	149.6 PPM

REFERENCE STDS

SRM # (CRM #)	CYLINDER NUMBER	CONC.
1685	AAL-9855	236.00 PPM
1684B	ALM-003638	97.30 PPM

GAS ANALYZER

MAKE/MODEL	LAST CALIBRATION DATE	ANALYTICAL PRINCIPLE
MONITOR LABS 8840-857	01-14-92	CHEMILUMINESCENCE

BALANCE GAS : NITROGEN

NITROGEN DIOXIDE 1.3 PPM

FIRST ANALYSIS — DATE : 03/17/92

ZERO GAS (mV)	TEST GAS (mV)	RESULTS PPM	REFERENCE GAS CONC.	REFERENCE GAS (mV)	RESULTS PPM
0.00	0.601	150.53	97.30 PPM	0.390	97.95
0.00	0.601	150.53		0.390	97.95
0.00	0.601	150.53		0.390	97.95

CALCULATED RESULTS 150.13, 150.13, 150.13

AVERAGE : 150.13 PPM

SECOND ANALYSIS — DATE : 03/24/92

ZERO GAS (mV)	TEST GAS (mV)	RESULTS PPM	REFERENCE GAS CONC.	REFERENCE GAS (mV)	RESULTS PPM
0.00	0.597	149.53	97.30 PPM	0.390	97.95
0.00	0.597	149.53		0.390	97.95
0.00	0.597	149.53		0.390	97.95
0.00	0.602 NOX	150.77			

CALCULATED RESULTS 149.12, 149.12, 149.12

150.38 PPM NOX

AVERAGE : 149.12 PPM

CALIBRATION CURVE 1 st

SRM # (CRM #)	CONC. PPM	SPLIT PT (%)	DVM (mV)	FITTED VALUE
1685	236.00	100	0.944	236.00
	204.00	86	0.817	204.35
	175.70	74	0.700	175.20
	148.80	63	0.596	149.28
	101.50	43	0.404	101.43
		0		0.00
		0		0.00
GMIS	101.50	LOW	0.404	101.43
1684B	97.30	CRM	0.390	97.95

* GMIS - GAS MANUFACTURER'S INTERNAL STANDARD

Analyst : David Chapman
DAVID CHAPMAN

Approved By : RS
RIC SCHMELTEKOPF

Scott Specialty Gases

600 WEAVER PARK ROAD, LONGMONT, COLORADO 80501 (303) 442-4700 Fax (303) 772-7073

Shipped From : Scott Colorado
Date Shipped : 3-12-92
Our Project # : 0007042
Your P.O. # : 921030A4
Page 1 of 1
Expiration Date : 09/03/93

omer : AMERICAN ENVIRONMENTAL TESTING
565 SOUTH BIRCH DRIVE
SPANISH FORK UT 84660

**** CERTIFICATE OF ANALYSIS - EPA PROTOCOL GASES ****

Certified Per Traceability Protocol # 1 — Section 3.0.4

File # AET50N0

Certified Accuracy 1 % NIST Traceable

Cylinder Number ALM-015341
Cylinder Pressure 2000 psig
CGA Fitting 660
QO Number 13069210

	REFERENCE STDS			GAS ANALYZER		
IPONENT	CERTIFIED CONC.	SRM # (CRM #)	CYLINDER NUMBER	CONC.	MAKE/MODEL	LAST CALIBRATION DATE	ANALYTICAL PRINCIPLE
IC OXIDE	51.13 PPM	1683	ALM-010422	47.53 PPM	MONITOR LABS 8840-857	01/14/92	CHEMILUMINESCENCE
		GMIS*	ALM-012509	19.49 PPM			

NCE GAS : NITROGEN

OGEN DIOXIDE 0.50 PPM

CERTIFIED EPA PROTOCOL

FIRST ANALYSIS — DATE : 02/25/92

TEST GAS (mV)	RESULTS PPM	REFERENCE GAS CONC.	(mV)	RESULTS PPM
1.023	51.16	19.49 PPM	0.304	19.16
1.023	51.16		0.304	19.16
1.023	51.16		0.304	19.16

CALCULATED RESULTS 51.21, 51.21, 51.21

AVERAGE : 51.21 PPM

SECOND ANALYSIS — DATE : 03/03/92

ZERO GAS (mV)	TEST GAS (mV)	RESULTS PPM	REFERENCE GAS CONC.	(mV)	RESULTS PPM
0.00	1.020	51.01	19.49 PPM	0.306	19.23
0.00	1.020	51.01		0.306	19.23
0.00	1.020	51.01		0.306	19.23
0.00	1.030 NOX	51.51			

CALCULATED RESULTS 51.05, 51.05, 51.05

51.55 PPM NOX

AVERAGE : 51.05 PPM

CALIBRATION CURVE — 1 st DEGREE

SRM # (CRM #)	CONC. PPM	SPLIT PT (%)	DVM (mV)	FITTED VALUE	PERCENT ERROR
	57.40	100	1.150	57.52	0.21
1683	47.53	83	0.951	47.53	0.00
	45.13	79	0.911	45.55	0.92
	19.49	34	0.391	19.50	0.03
	10.20	18	0.207	10.29	0.87
		0		0.00	0.00
		0		0.00	0.00
GMIS	10.20	LOW	0.207	10.29	0.87
N/A	19.49	GMIS*	0.391	19.50	0.03

GMIS - GAS MANUFACTURER'S INTERNAL STANDARD

Analyst : David Chapman — DAVID CHAPMAN

Approved By : RC — RIC SCHMELTEKOPF

Scott Specialty Gases a division of Scott Environmental Technology, Inc.
PLUMSTEADVILLE, PA. 18949 PHONE: (215) 766-8861 TWX: 510-665-9344

BRENT BENSON
565. S. BURCH DRIVE
SPANISH FORK, UTAH 84660

Date: 5/24/91
Our Project No.: 922444-2
Your P.O. No.: 2202-710980

Gentlemen:

Thank you for choosing Scott for your Specialty Gas needs. The analyses for the gases ordered, as reported by our laboratory, are listed below. Results are in volume percent, unless otherwise indicated.

ANALYTICAL REPORT

Cyl. No. BAL-1773 Analytical Accuracy ±1%

Component	Concentration
NITRIC OXIDE	1303 ppm
NOX	1313 ppm
NITROGEN DIOXIDE	10 ppm
NITROGEN	BALANCE
ACUBLEND MASTER GAS	

Cyl. No. BAL-2975 Analytical Accuracy ±1%

Component	Concentration
NITRIC OXIDE	397.8 ppm
NOX	399.1 ppm
NITROGEN DIOXIDE	1.3 ppm
NITROGEN	BALANCE
ACUBLEND MASTER GAS	

Cyl. No. BAL-396 Analytical Accuracy ±1%

Component	Concentration
CARBON MONOXIDE	99.36 ppm
NITROGEN	BALANCE
ACUBLEND MASTER GAS	

Recertified on 12/11-92 using NDIR w/current Protocol 1 Std.
1-98.4
2-99.2
3-100.1
3 = 99.23
Analyst [signature]

Cyl. No. BAL-1113 Analytical Accuracy ±1%

Component	Concentration
CARBON MONOXIDE	199.8 ppm
NITROGEN	BALANCE
ACUBLEND MASTER GAS	

1-202.7
2-200.3
3-198.8 / 3
= 200.6
Approved By J. Shapiro

The only liability of this Company for gas which fails to comply with this analysis shall be replacement thereof by the Company without extra cost.

OK. use tag value

OK. use tag value

CERTIFIED REFERENCE MATERIALS EPA PROTOCOL GASES
ACUBLEND® CALIBRATION & SPECIALTY GAS MIXTURES PURE GASES
ACCESSORY PRODUCTS CUSTOM ANALYTICAL SERVICES
TROY, MICHIGAN / SAN BERNARDINO, CALIFORNIA / HOUSTON, TEXAS

Specialty Gases

500 WEAVER PARK ROAD, LONGMONT, COLORADO 80501 (303) 442-4700 Fax (303) 772-7673

Shipped From : Scott Colorado
Date Shipped : 3-25-92
Our Project # : 0807254
Your P.O. # : ELP92113
Page 1 of 3
Expiration Date : 09/24/93

Customer : AMERICAN ENVIRONMENTAL TESTING
ATTN. BRENT BENSON
565 SOUTH BIRCH DRIVE
SPANISH FORK UT 84660

**** CERTIFICATE OF ANALYSIS - EPA PROTOCOL GASES ****

Certified Per Traceability Protocol # 1 — Section 3.0.4

Certified Accuracy 1 % NIST Traceable — File # AET255NO

Cylinder Number BLM-002655
Cylinder Pressure 2000 psig
CGA Fitting 660
QC Number 13249207

COMPONENT	CERTIFIED CONC.
NITRIC OXIDE	249.8 PPM

REFERENCE STDS

SRM # (CRM #)	CYLINDER NUMBER	CONC.
1685	AAL-9855	236.00 PPM
1684B	ALM-003638	97.30 PPM

GAS ANALYZER

MAKE/MODEL	LAST CALIBRATION DATE	ANALYTICAL PRINCIPLE
MONITOR LABS 8840-857	01-14-92	CHEMILUMINESCENCE

BALANCE GAS : NITROGEN

NITROGEN DIOXIDE 2.3 PPM

FIRST ANALYSIS — DATE : 03/17/92

ZERO GAS (mV)	TEST GAS (mV)	RESULTS PPM	REFERENCE GAS CONC.	REFERENCE GAS (mV)	RESULTS PPM
0.00	1.001	250.20	97.30 PPM	0.390	97.95
0.00	1.001	250.20		0.390	97.95
0.00	1.001	250.20		0.390	97.95

CALCULATED RESULTS 250.27, 250.27, 250.27

AVERAGE : 250.27 PPM

SECOND ANALYSIS — DATE : 03/24/92

ZERO GAS (mV)	TEST GAS (mV)	RESULTS PPM	REFERENCE GAS CONC.	REFERENCE GAS (mV)	RESULTS PPM
0.00	0.997	249.21	97.30 PPM	0.390	97.95
0.00	0.997	249.21		0.390	97.95
0.00	0.997	249.21		0.390	97.95
0.00	1.006 NOX	251.45			

CALCULATED RESULTS 249.27, 249.27, 249.27

251.52 PPM NOX

AVERAGE : 249.27 PPM

CALIBRATION CURVE 1 st DEGREE

SRM # (CRM #)	CONC. PPM	SPLIT PT (%)	DVM (mV)	FITTED VALUE	PERCENT ERROR
1685	236.00	100	0.944	236.00	0.00
	204.00	86	0.817	204.35	0.17
	175.70	74	0.700	175.20	-0.29
	148.80	63	0.596	149.28	0.32
	101.50	43	0.404	101.43	-0.07
		0		0.00	0.00
		0		0.00	0.00
GMIS	101.50	LOW	0.404	101.43	-0.07
1684B	97.30	CRM	0.390	97.95	0.66

* GMIS - GAS MANUFACTURER'S INTERNAL STANDARD

Analyst : David Chapman
DAVID CHAPMAN

Approved By : RC
RIC SCHMELTEKOPF

American Environmental Testing Company, Inc.
565 South Birch Drive Spanish Fork, Utah 84660
(801) 798-8553 (801) 266-7111

POSTTEST DRY GAS METER CALIBRATION DATA FORM
(English Units)

Date	Barometric Pressure	Meter Box Number	Plant
2/19/93	25.61	RAC	Chemstar

Calibrated By	Pretest Yi	Average Yi	Low Span	High Span
BAL - GEJ	1.002	1.004	0.952	1.052

Orfice Manometer Setting ΔH	Wet Test Meter (Vw) Ft3	Dry Gas Meter (Vd) Ft3	Wet Test Meter (Tw) °F	ΔH/13.6	Wet Test Meter Average Temp.
2.00	10.005	9.924	71	0.14706	71
			71		
2.00	10.009	9.975	72	0.14706	72.5
			73		
2.00	10.008	10.025	73	0.14706	73.5
			74		

Dry Gas Meter Inlet (Td i) °F	Outlet (Td o) °F	Average (Td) °F	Time Ø Minutes	Yi
71	72	72.25	12.36	1.005
72	74			
73	75	75.50	12.51	1.003
76	78			
77	79	79.25	12.24	1.003
79	82			
				Average Yi
				1.004

Post Test Temperature Check

Date: 2/19/93 Reference: ERTCO Hg Thermometer

Meter Box: RAC 145-569 Sample Box: RAC

	Meter Box	Reference
Meter In:	71	72
Meter Out:	79	79

	Sample Box	Reference
Impinger In:	157	158
Impinger Out:	46	47
Oven:	262	262

American Environmental Testing Company, Inc.
565 South Birch Drive Spanish Fork, Utah 84660
(801) 798-8553 (801) 266-7111

POSTTEST DRY GAS METER CALIBRATION DATA FORM
(English Units)

Date	Barometric Pressure	Meter Box Number	Plant
2/19/93	25.61	CR (097)	Chemstar

Calibrated By	Pretest Yi	Average Yi	Low Span	High Span
BAL - GEJ	1.142	1.147	1.085	1.199

Orfice Manometer Setting ΔH	Wet Test Meter (Vw) Ft3	Dry Gas Meter (Vd) Ft3	Wet Test Meter (Tw) °F	ΔH/13.6	Wet Test Meter Average Temp.
2.00	10.038	8.736	72 73	0.14706	72.5
2.00	10.018	8.755	73 74	0.14706	73.5
2.00	10.027	8.759	75 75	0.14706	75

Dry Gas Meter Inlet (Td i) °F	Outlet (Td o) °F	Average (Td) °F	Time Ø Minutes	Yi
72 74	74 75	73.75	12.02	1.145
77 78	78 79	78.00	12.09	1.147
79 80	81 82	80.50	12.12	1.150
				Average Yi
				1.147

Post Test Temperature Check

Date: 2/19/93 Reference: ERTCO Hg Thermometer

Meter Box: CR #1(097) Sample Box: CR#1A

	Meter Box	Reference		Sample Box	Reference
Meter In:	69	69	Impinger In:	168	167
Meter Out:	73	74	Impinger Out:	46	46
			Oven:	258	259

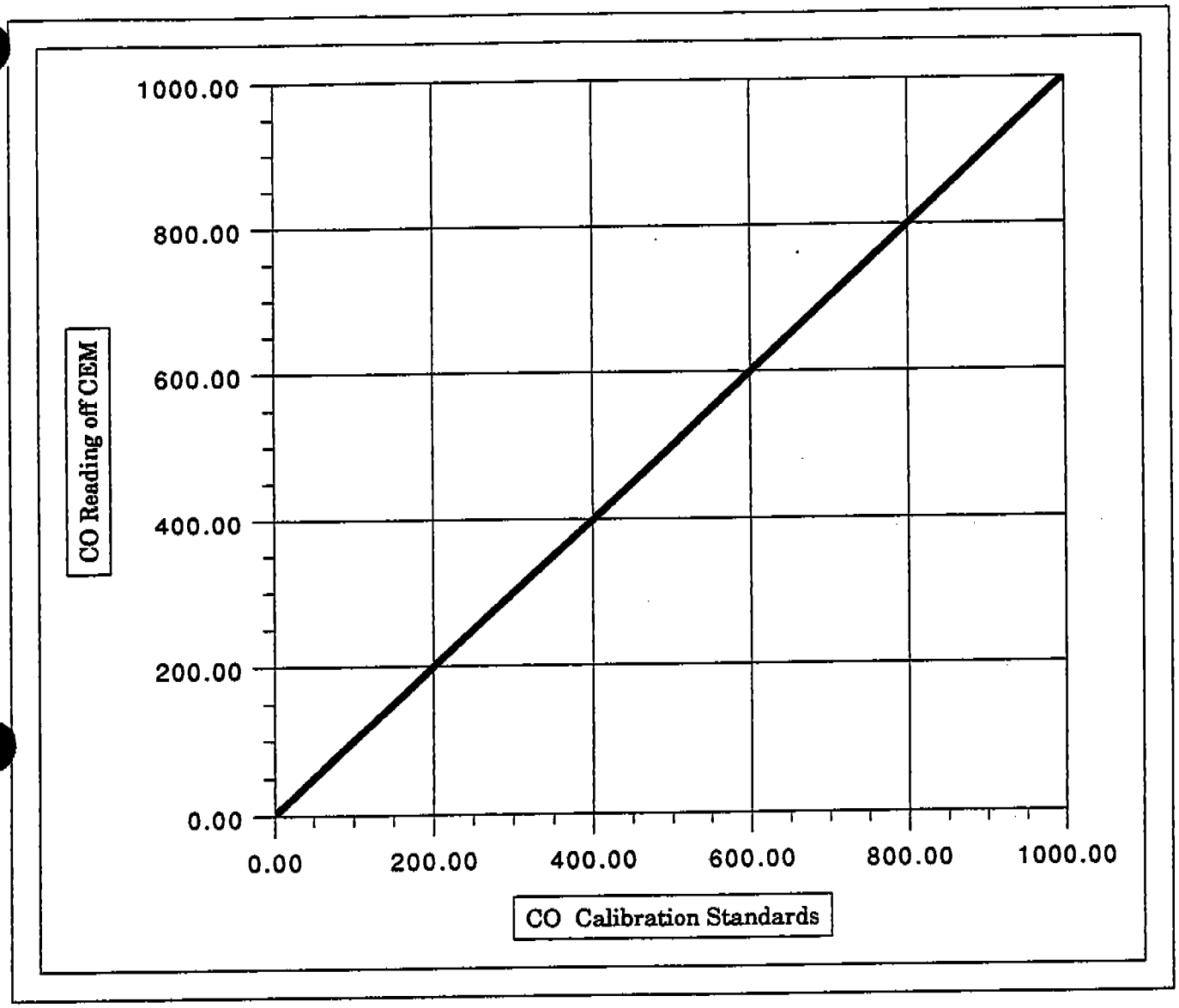

AMERICAN ENVIRONMENTAL TESTING, INC.
565 S. BIRCH DR.
SPANISH FORK, UTAH 84660
(801) 266-7111

COMPANY Chemstar
SOURCE DC-316 Lime Kiln

STANDARDS USED :

99.36 ppm Carbon Monoxide
303.7 ppm Carbon Monoxide
662.3 ppm Carbon Monoxide

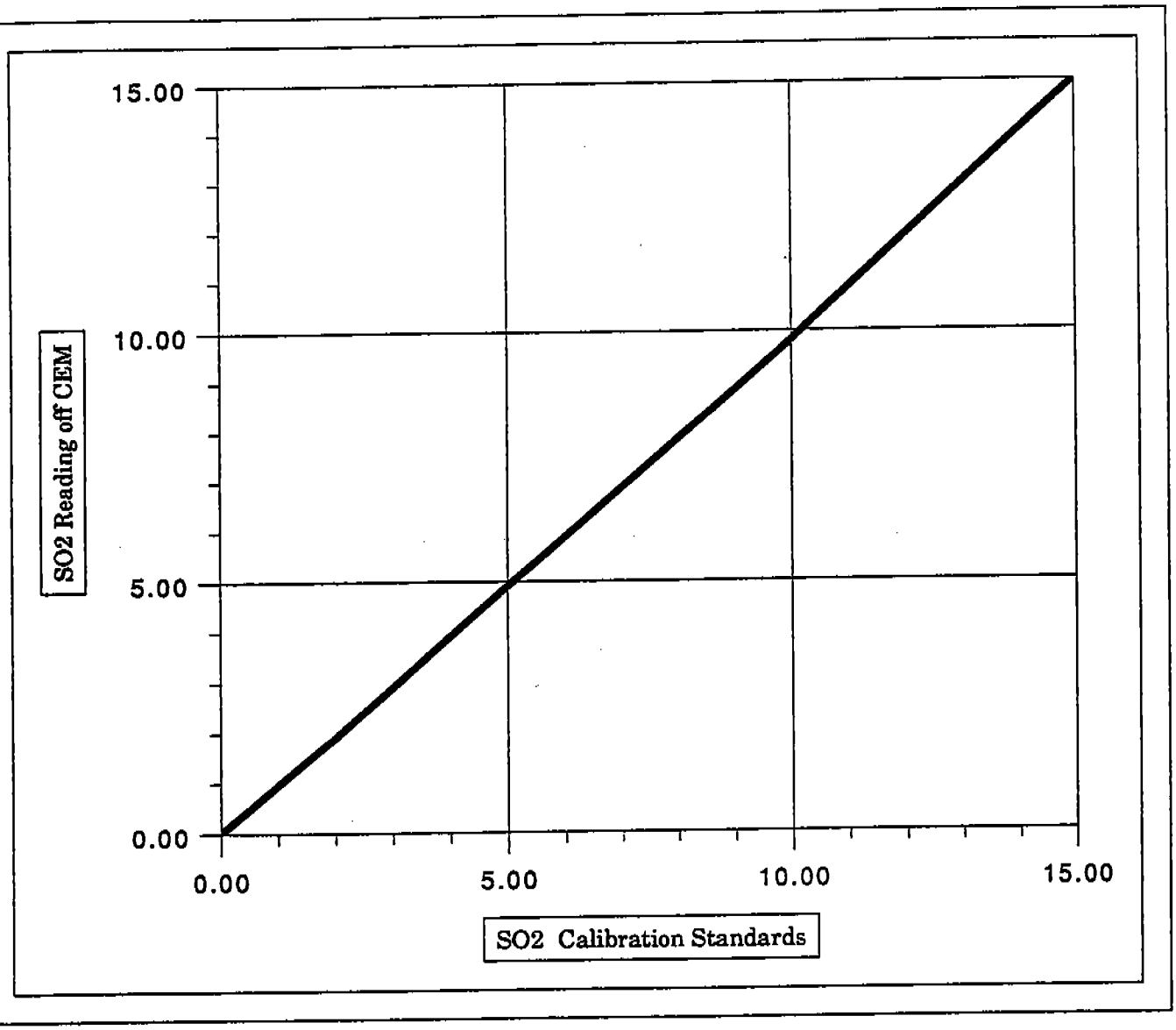

AMERICAN ENVIRONMENTAL TESTING, INC.
565 S. BIRCH DR.
SPANISH FORK, UTAH 84660
(801) 266-7111

COMPANY Chemstar
SOURCE DC-316 Lime Kiln

STANDARDS USED :

2.0 ppm Sulfur Dioxide
5.0 ppm Sulfur Dioxide
10.0 ppm Sulfur Dioxide

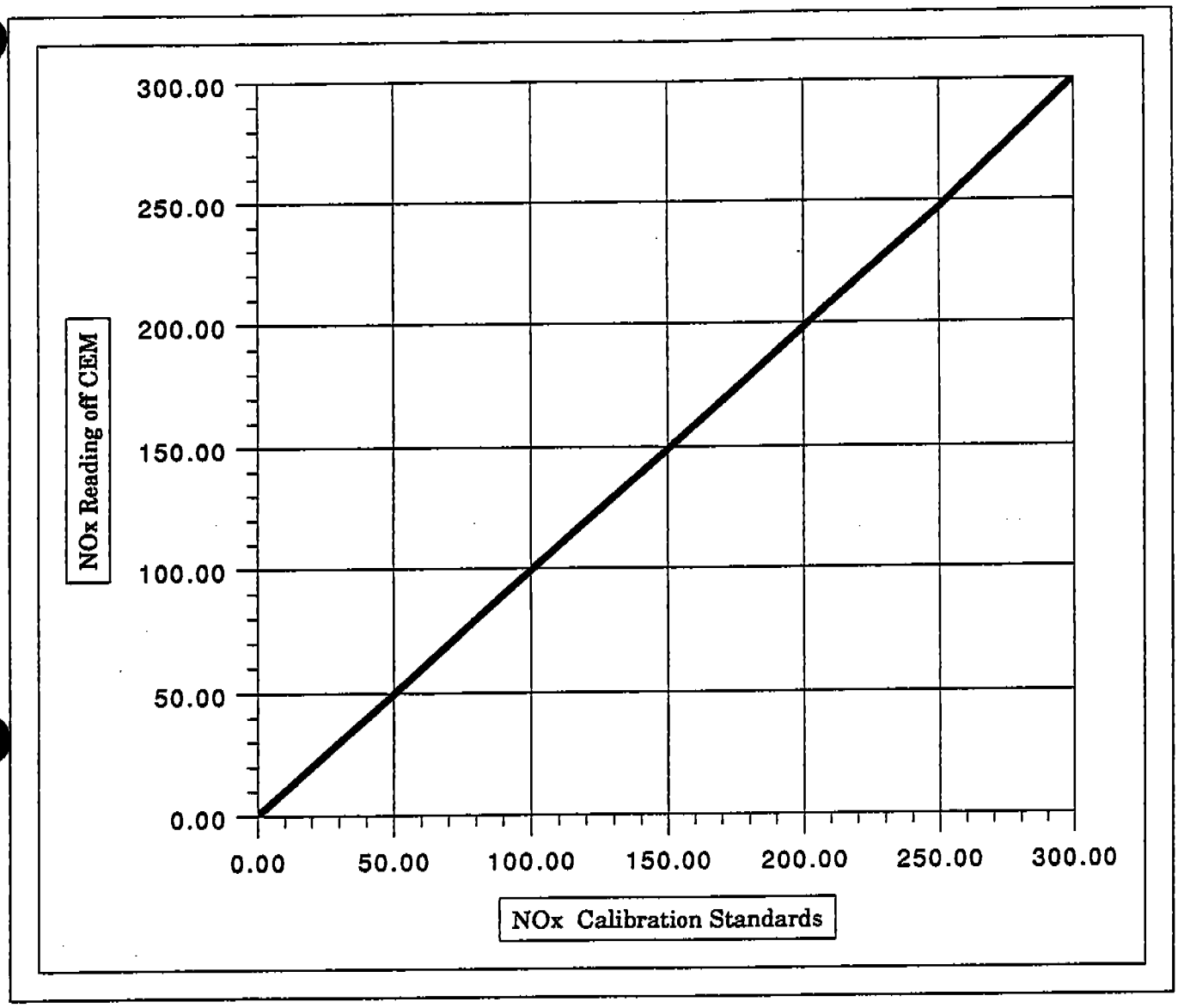

AMERICAN ENVIRONMENTAL TESTING, INC.
565 S. BIRCH DR.
SPANISH FORK, UTAH 84660
(801) 266-7111

COMPANY Chemstar Lime
SOURCE DC-316 Lime Kiln

STANDARDS USED :

51.13 ppm Nitrogen Dioxide
149.6 ppm Nitrogen Dioxide
249.8 ppm Nitrogen Dioxide

American Environmental Testing Company, Inc.
565 South Birch Drive
Spanish Fork, Utah 84660
(801) 266-7111

Analyzer Calibration Data

Company: Chenstar

Date: 2/15/93

Source: DC 316 Line Kiln

Run Number: Pretest

Span: 0 - 300 ppm NOx

	Cylinder Value (ppm)	Analyzer Calibration Repsonse (ppm)	Absolute Difference (ppm)	Difference (% of span)
	51.13	50.4	0.73	0.24
	149.6	149.5	0.1	0.03
	249.8	249.3	0.5	0.17

American Environmental Testing Company, Inc.

565 South Birch Drive

Spanish Fork, Utah 84660

(801) 266-7111

System Calibration Bias and Drift Data

Company: Chemstar

Date: 2/15/93

Source: DC 316 Line Kiln

Run Number: #1

Span: 0 - 300 ppm NOx

	Analyzer Calibration Response	Initial		Final		Drift (% of span)
		System Calibration Response	System Bias (% of Span)	System Calibration Response	System Bias (% of Span)	
	0	0	0	0.2	0.07	0.07
	149.5	149.5	0	149.1	0.13	0.13

American Environmental Testing Company, Inc.
565 South Birch Drive
Spanish Fork, Utah 84660
(801) 266-7111

System Calibration Bias and Drift Data

Company: Chemstar

Date: 2/15/93

Source: DC 316 Lime Kiln

Run Number: #2

Span: 0-300 ppm NO_x

	Analyzer Calibration Response	Initial		Final		Drift (% of span)
		System Calibration Response	System Bias (% of Span)	System Calibration Response	System Bias (% of Span)	
	0	0.2	0.07	0.4	0.13	0.06
	149.5	149.1	0.13	148.9	0.20	0.07

American Environmental Testing Company, Inc.
565 South Birch Drive
Spanish Fork, Utah 84660
(801) 266-7111

System Calibration Bias and Drift Data

Company: Chemster

Date: 2/15/93

Source: DC 316 Lime Kiln

Run Number: #3

Span: 0-300 ppm NO_x

	Analyzer Calibration Response	Initial		Final		Drift (% of span)
		System Calibration Response	System Bias (% of Span)	System Calibration Response	System Bias (% of Span)	
	0	0.4	0.13	0.3	0.10	0.03
	149.5	148.9	0.20	149.0	0.17	0.03

American Environmental Testing Company, Inc.
565 South Birch Drive
Spanish Fork, Utah 84660
(801) 266-7111

Analyzer Calibration Data

Company: Chemstar

Date: 2/15/93

Source: DC 316 Line Kiln

Run Number: Pretest

Span: 0-1000 ppm CO

	Cylinder Value (ppm)	Analyzer Calibration Repsonse (ppm)	Absolute Difference (ppm)	Difference (% of span)
	99.36	100.1	0.74	0.07
	303.7	305.0	1.3	0.13
	662.3	664.5	2.2	0.22

American Environmental Testing Company, Inc.
565 South Birch Drive
Spanish Fork, Utah 84660
(801) 266-7111

System Calibration Bias and Drift Data

Company: Chemster

Date: 2/15/93

Source: DC 316 Line Kiln

Run Number: #1

Span: 0-1000 ppm CO

	Analyzer Calibration Response	Initial		Final		Drift (% of span)
		System Calibration Response	System Bias (% of Span)	System Calibration Response	System Bias (% of Span)	
	0	0	0	0.2	0.02	0.02
	305.0	305.0	0	304.7	0.03	0.03

American Environmental Testing Company, Inc.
565 South Birch Drive
Spanish Fork, Utah 84660
(801) 266-7111

System Calibration Bias and Drift Data

Company: Chemstar

Date: 2/15/93

Source: DC 316 Line Kiln

Run Number: #2

Span: 0-1000 ppm CO

	Analyzer Calibration Response	Initial		Final		Drift (% of span)
		System Calibration Response	System Bias (% of Span)	System Calibration Response	System Bias (% of Span)	
	0	0.2	0.02	0.4	0.04	0.02
	305.0	304.7	0.03	304.1	0.09	0.06

American Environmental Testing Company, Inc.
565 South Birch Drive
Spanish Fork, Utah 84660
(801) 266-7111

System Calibration Bias and Drift Data

Company: Chemster

Date: 2/15/93

Source: DC 316 Line Kiln

Run Number: #3

Span: 0-1000 ppm CO

	Analyzer Calibration Response	Initial		Final		Drift (% of span)
		System Calibration Response	System Bias (% of Span)	System Calibration Response	System Bias (% of Span)	
	0	0.4	0.04	0.3	0.03	0.01
	305.0	304.1	0.09	304.5	0.05	0.04

American Environmental Testing Company, Inc.
565 South Birch Drive
Spanish Fork, Utah 84660
(801) 266-7111

Analyzer Calibration Data

Company: Chemstar

Date: 2/15/93

Source: DC 316 Lime Kiln

Run Number: Pretest

Span: 0-100 ppm SO_2

	Cylinder Value (ppm)	Analyzer Calibration Repsonse (ppm)	Absolute Difference (ppm)	Difference (% of span)
	2.0	2.0	0	0
	5.0	4.9	0.1	0.1
	10.0	10.0	0	0

American Environmental Testing Company, Inc.
565 South Birch Drive
Spanish Fork, Utah 84660
(801) 266-7111

System Calibration Bias and Drift Data

Company: Chemstar

Date: 2/15/93

Source: DC 316 Lime Kiln

Run Number: #1

Span: 0-100 ppm SO_2

	Analyzer Calibration Response	Initial		Final		Drift (% of span)
		System Calibration Response	System Bias (% of Span)	System Calibration Response	System Bias (% of Span)	
	0	0	0	0.2	0.2	0.2
	4.9	4.9	0	4.8	0.1	0.1

American Environmental Testing Company, Inc.
565 South Birch Drive
Spanish Fork, Utah 84660
(801) 266-7111

System Calibration Bias and Drift Data

Company: Chemstar

Date: 2/15/93

Source: DL 316 Line Kiln

Run Number: #2

Span: 0-100 ppm SO_2

	Analyzer Calibration Response	Initial		Final		Drift (% of span)
		System Calibration Response	System Bias (% of Span)	System Calibration Response	System Bias (% of Span)	
	0	0.2	0.2	0.4	0.4	0.2
	4.9	4.8	0.1	4.8	0.1	0

American Environmental Testing Company, Inc.
565 South Birch Drive
Spanish Fork, Utah 84660
(801) 266-7111

System Calibration Bias and Drift Data

Company: Chemster

Date: 2/15/93

Source: DL 316 Line Kiln

Run Number: #3

Span: 0-100 ppm SO_2

	Analyzer Calibration Response	Initial		Final		Drift (% of span)
		System Calibration Response	System Bias (% of Span)	System Calibration Response	System Bias (% of Span)	
	0	0.4	0.4	0.3	0.3	0.1
	4.9	4.8	0.1	4.7	0.2	0.1