Note: This is a reference cited in *AP 42, Compilation of Air Pollutant Emission Factors, Volume I Stationary Point and Area Sources.* AP42 is located on the EPA web site at www.epa.gov/ttn/chief/ap42/

The file name refers to the reference number, the AP42 chapter and section. The file name "ref02_c01s02.pdf" would mean the reference is from AP42 chapter 1 section 2. The reference may be from a previous version of the section and no longer cited. The primary source should always be checked.

DRAFT/WP
d3006-4/971130
03/30/92 1

Emission Test Report
Review Checklist

Reviewer: Lee Alter
Review Date: 6/29/92

A. Background Information

1. Facility name: DOW CHEMICAL -- Plant B

   Location: Freeport, TX

2. Source category: Lime

3. Test date: April 30 - May 3 1974

4. Test sponsor: EPA

5. Testing contractor: Environmental Sciences and Engineering

6. Purpose of test: develop performance standards for new and modified sources

7. Pollutants measured

   PM PM-10 CO SO_2 NO_x VOC Pb CO_2

   Others (list): Opacity

8. Process overview: On an attached page provide a block diagram of the unit operations and associated air pollution control systems at the facility. Identify process tested with letters from the beginning of the alphabet (A, B, C, etc.) and APC systems with letters from end of alphabet (V, W, X, etc.). Also identify test locations with Arabic numerals (1,2,3, ...). Using the ID symbols from that sketch complete the table below that identifies processes or unit operations tested.

Test ID	Process	Process ID	Emissions tested		APCD (controlled emissions only)
			Uncontrolled	Controlled	
1	Calcination	A		✓	ESP
2	Calcination	A		✓	ESP

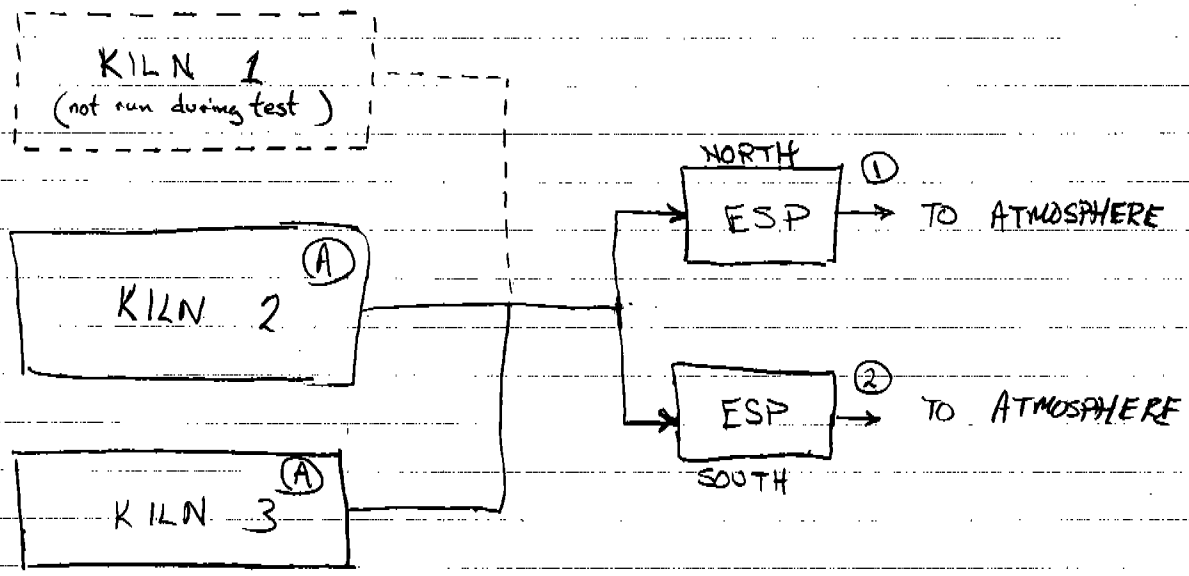
KILN 1
(not run during test)
KILN 2
A
KILN 3
A
NORTH
ESP
1
TO ATMOSPHERE
ESP
2
TO ATMOSPHERE
SOUTH

2. For each process tested list feedstock materials and products. Indicate if activity factors are for feed (F) rate or product (P) rate.

Process ID	Feedstock materials	Products	Basis for activity factor	F/P
A	Crushed limestone	calcined lime		F
	~~Crushed limestone~~	~~calcined lime~~		~~F~~

Basis for data: _____
(Indicate page/table Nos. in test report)

3. For each process or operation tested and each test run note process capacity and operating rate during test.

Process ID	Capacity	Units	Test run	Process rate	Units
A	750	tons/day	1	20.3	tons/hr
			2	20.0	tons/hr
			3	20.2	tons/hr
			4		
			1		
			2		
			3		
			4		
			1		
			2		
			3		
			4		
			1		
			2		
			3		
			4		

Basis for data: Table 2.1 (p.4) and p. 10

3. Using the attached parameter list for guidance complete the table below. (Use additional pages as needed.)

APCD ID	Parameter	Units	Readings			
			Run 1	Run 2	Run 3	Run 4
A						
Type of APCD: ESP						
Type of APCD:						
Type of APCD:						

2. If a method used was not a reference or conditional method, provide a narrative discussion including any data manipulation needed to make results correspond to reference or conditional method results.

3. Describe any deviations identified above.

2. Tabulate pollutant mass flux rates

Test ID	Pollutant	Units	Mass flux rates			
			Run 1	Run 2	Run 3	Run 4
1	Filt. PM	lb/h	~~7.00~~	1.42	2.35	
	Total PM	lb/h	~~12.62~~	2.28	3.26	
	CO	lb/h	13.7	5.50	~~51.4~~	
	CO_2	lb/h	~~30,000~~	~~31,800~~	~~26,500~~	
	SO_2	lb/h	0	0	0	
2	Filt. PM	lb/h	~~2.51~~	0.95	2.20	
	Total PM	lb/h	~~4.06~~	5.45	4.74	
	CO	lb/h	4.25	6.48	~~52.7~~	
	CO_2	lb/h	~~33,600~~	~~31,400~~	~~32,100~~	
	~~SO_2~~					
	NO_x	lb/h	44.9	33.4	32.0	

4. Tabulate emission factors

Process	Pollutant	Units	Average emission factor		Data Rating
			Uncontrolled	Controlled	
A-1	Filt. PM	lb/ton fed	0.094	✓	A
	Total PM	lb/ton fed	0.138	✓	
	CO	lb/ton fed	0.475	✓	
	CO_2	lb/ton fed	—	✓	
	SO_2	lb/ton fed	0	✓	
A-2	Filt. PM	lb/ton fed	0.078	✓	
	Total PM	lb/ton fed	0.253	✓	
	CO	lb/ton fed	0.267	✓	
	CO_2	lb/ton fed	—	✓	
	NO_x	lb/ton fed	1.82	✓	

EPA PROJECT REPORT NO. 74-LIM-6

11690

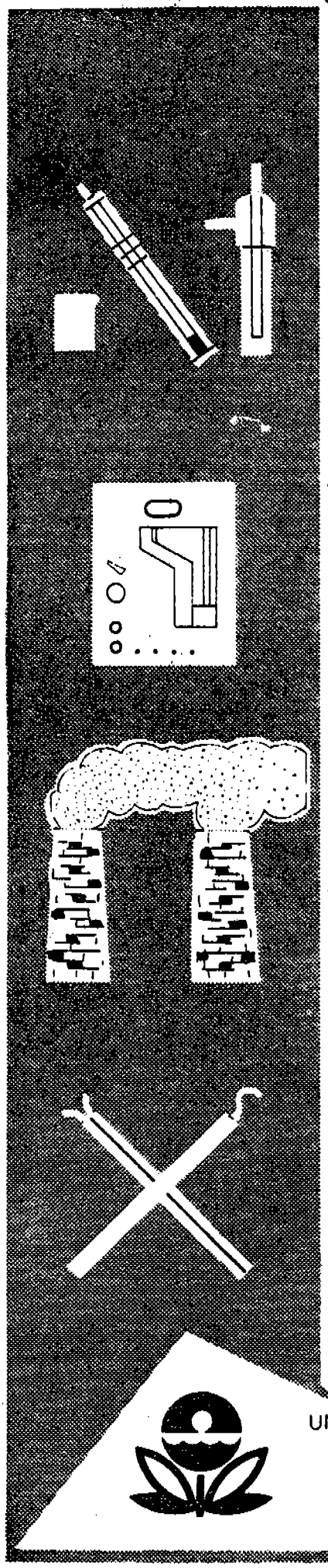

AIR POLLUTION EMISSION TEST

DOW CHEMICAL

Freeport, Texas

UNITED STATES ENVIRONMENTAL PROTECTION AGENCY
Office of Air and Waste Management
Office of Air Quality Planning and Standards
Emission Measurement Branch
Research Triangle Park, North Carolina

UNITED STATES ENVIRONMENTAL PROTECTION AGENCY
Office of Air Quality Planning and Standards
Research Triangle Park, North Carolina 27711

SUBJECT: Source Test Report

DATE: July 29, 1975

file

FROM: Thomas M. Bibb, Emission Measurement Branch
Emission Standards and Engineering Division (MD-13)

TO: See Below

The enclosed final source test report is submitted for your information. Any questions regarding the test should be directed to the Project Officer (area code 919-688-8583). Additional copies of this report are available from the Air Pollution Technical Information Center, Research Triangle Park, North Carolina 27711.

Industry: Lime Kiln

Process:

Company: Dow Chemical

Location: Freeport, Texas

Project Report Number: 74-LIM-6

Project Officer: Terry Harrison

Addressees:
John Nader
James Southerland
Test Project Engineer
Director, Air & Water Programs Division, Region IV.
(copy enclosed for State Agency)
APTIC

EPA Form 1320-6 (Rev. 6-72)

A STUDY OF GASEOUS AND PARTICULATE EMISSIONS FROM LIME KILNS AT DOW CHEMICAL CORPORATION PLANT B FREEPORT, TEXAS

May, 1974

PREPARED AND SUBMITTED BY:

ENVIRONMENTAL SCIENCE AND ENGINEERING, INC.
POST OFFICE BOX 13454
GAINESVILLE, FLORIDA 32604
PN 73 011 042

PREPARED FOR:

U.S. ENVIRONMENTAL PROTECTION AGENCY
EMISSIONS MEASUREMENT BRANCH
RESEARCH TRIANGLE PARK, NORTH CAROLINA

environmental science and engineering, inc.

TABLE OF CONTENTS

		Page Number
	List of Tables	ii
	List of Figures	iii
1.0	Introduction	1
2.0	Summary and Discussion of Results	3
3.0	Process Description and Operation	9
4.0	Location of Sampling Points	15
5.0	Sampling and Analytical Procedures	15
	Appendices	
	A - Calculated Emissions Data	
	B - Field Data	
	C - Analytical Procedures and Sample Calculations	
	D - Lab Report	
	E - Test Log	
	F - Notes on Plant Operation	
	G - Project Participants	

LIST OF TABLES

		Page Number
Table 2.1	Particulate Data Summary - English	4
Table 2.2	Particulate Data Summary - Metric	5
Table 2.3	Gas Data Summary	6
Table 3.1	Summary of Operating Variables	14

LIST OF FIGURES

		Page Number
Figure 3.1	Precipitator Plan and Elevation	11
Figure 3.2	Stack Elevations	12

1.0 INTRODUCTION

A part of the Environmental Protection Agency's ongoing work in pollution abatement is concerned with setting performance standards for new and substantially modified stationary sources. One source under consideration at present is rotary kilns used to calcine lime. Dow Chemical Corporation operates a large chemical complex in Freeport, Texas which uses slaked lime in recovering magnesium from seawater and various other operations.

There are three rotary kilns used to calcine dolomite ($CaCO_3 \cdot MgCO_3$). The plant is capable of operating one, two or all three kilns simultaneously. The kilns are serviced by electrostatic precipitators (ESP's) for the control of particulate emissions. The gas stream from the operating kilns is combined prior to the ESP's and then split and ducted through two ESP's and vented to the atmosphere through two stacks, one for each ESP.

During the week of April 29, 1974, Environmental Science and Engineering, Inc. (ESE) conducted three series of tests on the two outlet stacks under contract for the EPA. During the testing period two of the kilns were operating simultaneously. Each stack was monitored for particulate matter, using EPA method 5; opacity, using a modified version of EPA method 9; CO_2 and O_2, using a modified version of EPA method 3; and CO, using EPA method 10. In addition, SO_2 concentrations were measured on the north stack using EPA method 6 and NO_x concentrations were measured on the south stack using EPA method 7.

Another provision of the tests was to conduct comparison tests for particulate matter at a single location in the stack using an in-stack filter and an EPA-5 train. No valid comparison data were obtained due to equipment difficulties.

2.0 SUMMARY AND DISCUSSION OF RESULTS

2.1 Particulate matter, Orsat, CO, SO_2, NO_x and opacity data are summarized in Tables 2.1 - 2.3.

The total average particulate emission rate was 4.9 kg/hr. (10.8 lbs/hr.) for the two stacks combined. However, this value is probably somewhat high as the first test on the north stack indicated 5.7 kg/hr. (12.6 lbs/hr.) alone. The average for runs 2 and 3 was 3.6 kg/hr. (7.9 lbs/hr.) for the two stacks combined, which is substantially lower. It is not known why the first run on the north stack indicated such a high emission rate. Some error may have been introduced because the person manipulating the probe misunderstood where the probe markings were to be located; instead of locating the marking at the outside of the pipe nipple, he positioned it at the inside stack wall on the first run only. This means that each point sampled was displaced from the equal area center by approximately 4 inches. It seems unlikely that this would introduce a very large error, however, it is possible that the probe tip came so close to the far stack wall that it contaminated the sample with particulate off the stack wall.

Laboratory analysis of the particulate samples showed a large amount of variability in the weight fraction caught in the various parts of the sampling train (probe, filter, etc.). The average for all of the runs was as follows: Probe - 20.5%, Filter - 32%, Back Half Water - 29.5%, Back Half Acetone - 18%. This means that only 53% of the total catch was caught in the probe and filter (front half), the remaining portion being in the impingers.

Table 2.1 Particulate Data Summary (English)

RUN NUMBER	1		2		3		Averages	
DATE	April 30, 1974		May 2, 1974		May 3, 1974			
STACK DESIGNATION	NORTH	SOUTH	NORTH	SOUTH	NORTH	SOUTH	NORTH	SOUTH
Volume of Gas Sampled, DSCF (1)	43.39	99.62	131.33	131.66	133.72	136.15	102.81	122.48
Percent Moisture By Volume	~~18.5~~	17.1	17.6	17.9	18.2	18.6	18.1	17.9
Average Stack Temperature, °F	373	449	361	412	366	406	367	422
Stack Volumetric Flow Rate, DSCFM	49,144	47,834	45,911	42,945	46,318	45,693	47,124	45,490
Stack Volumetric Flow Rate, ACFM	93,559	97,870	85,521	85,190	87,951	91,500	89,010	91,520
Percent Isokinetic	128	119	103	110	104	110	111	113
FEED Process Weight Rate, Ton/Hr (2)	20.3	20.3	20.0	20.0	20.3	20.3	20.2	20.2
PARTICULATES - PROBE AND FILTER								
Mg	46.7	39.5	30.6	21.9	51.2	49.5	42.8	37.0
Gr/DSCF (3)	0.0166	0.0061	0.0036	0.0025	0.0059	0.0056	0.0087	0.0047
Gr/ACF	0.0087	0.0029	0.0019	0.0013	0.0031	0.0028	0.0046	0.0023
Lb/Hr	7.00	2.51	1.42	0.95	2.35	2.20	3.59	1.89
Lb/Ton Feed	0.344	0.124	0.071	0.048	0.116	0.108	0.177	0.093
PARTICULATES, TOTAL								
Mg	84.2	63.9	49.4	126.4	71.2	106.7	68.3	99.0
Gr/DSCF	0.0299	0.0099	0.0058	0.0147	0.0082	0.012	0.0146	0.0122
Gr/ACF	0.0157	0.0047	0.0031	0.0074	0.0043	0.006	0.0077	0.0060
Lb/Hr	12.62	4.06	2.28	5.45	3.26	4.74	6.05	4.75
Lb/Ton Feed	0.62	0.20	0.114	0.272	0.161	0.233	0.298	0.235
Percent Impinger Catch	44.5	38.2	38.1	82.7	28.1	53.6	36.9	58.2

(1) Dry standard cubic feet at 70°F and 29.92 inches Hg.
(2) These values are averages for the kilns (see Table 3.1) i.e. total feed rate for run #1 was 40.6 ton per hour.
(3) Grains per DSCF.

Table 2.2 Particulate Data Summary (Metric)

RUN NUMBER	1		2		3		Averages	
DATE	April 30, 1975		May 2, 1974		May 3, 1974			
STACK DESIGNATION	NORTH	SOUTH	NORTH	SOUTH	NORTH	SOUTH	NORTH	SOUTH
Volume of Gas Sampled, DSCM(1)	1.23	2.82	3.72	3.73	3.79	3.86	2.91	3.47
Percent Moisture by Volume	18.5	17.1	17.6	17.9	18.2	18.6	18.1	17.9
Average Stack Temperature, °C	189	232	183	211	186	208	186	217
Stack Volumetric Flow Rate, DSCMM	1392	1355	1300	1216	1312	1294	1334	1288
Stack Volumetric Flow Rate, ACMM	2650	2772	2422	2413	2491	2591	2521	2592
Percent Isokinetic	128	119	103	110	104	110	111	113
Feed Rate, M-Ton/Hr(2)	18.4	18.4	18.2	18.2	18.4	18.4	18.3	18.3
PARTICULATES - PROBE AND FILTER								
Mg	46.7	39.5	30.6	21.9	51.2	49.5	42.8	37.0
Mg/DSCM	38.01	14.00	8.23	5.87	13.52	12.84	19.92	10.90
Mg/ACM	19.96	6.84	4.42	2.96	7.11	6.41	10.50	5.40
Kg/Hr	15.4	5.52	3.12	2.09	5.17	4.84	7.90	4.15
Kg/M-Ton Feed	0.84	0.30	0.17	0.11	0.28	0.26	0.43	0.23
PARTICULATES - TOTAL								
Mg	84.2	63.9	49.4	126.4	71.2	106.7	68.3	99.0
Mg/DSCM	68.53	22.65	13.28	33.90	18.80	27.67	33.54	28.07
Mg/ACM	35.99	11.07	7.13	17.08	9.90	13.81	17.67	13.99
Kg/Hr	27.76	8.93	5.02	11.99	7.17	10.43	13.32	10.45
Kg/M-Ton Feed	1.51	0.48	0.28	0.66	0.39	0.57	0.73	0.57
Percent Impinger Catch	44.5	38.2	38.1	82.7	28.1	58.2	36.9	58.2

(1) Dry standard cubic meter at 21°C and 29.92 inches Hg
(2) Metric tons per hour (2200 lbs = 1 M-Ton)

Table 2.3 Gas Data Summary

Run	Location	Flow SCMMD	Orsat Data % CO_2	Orsat Data % O_2	CO PPMD	PPMD NO_x	PPM SO_2	Visible Opacity 1	Visible Opacity 2	Visible Opacity 3	Visible Opacity 4
1	North	1392	8.7	12.2	63		0			0	0
	South	1355	10.0	11.1	20	129		0	0		
2	North	1300	9.7	11.3	27		0		0		<5(1)
	South	1216	10.4	9.7	34	96		0	0		
3	North	1312	8.1	10.8	~~250~~		0	0(2)			<5(1)
	South	1294	10.0	9.8	~~260~~	96		0(2)			<5(1)

(1) Several readings of 5 and 10

(2) Several readings of 5

After the first run, the Orsat was found to be in error when checked against ambient air. Since it rained all day Wednesday, time was spent calibrating a portable gas chromatograph to measure CO_2 and O_2. When the integrated gas samples from the first day's testing were analyzed Wednesday afternoon, it appeared that the results were in error, i.e., the percent CO_2 seemed low and the percent O_2 high. However, when comparable results were obtained from test 2 on Thursday, it seemed to indicate that there was possibly a leak, either in the integrated sampler or in the duct work.

To find out where the leak was, a direct sample was taken from the stacks on Thursday evening; the results were the same as those obtained from the bag sample. On close examination it was discovered that ambient air was drawn into the system prior to the ESP's. The major places where this occurred were at the kiln bearing seals and the openings (approximately 20 x 40 inches) where the feed rock is dropped from conveyor belts into the kiln. These locations are on the negative side of the fan and, hence, draw ambient air into the system.

The concentration of CO as measured by NDIR[1] from injections taken from the integrated bag samples varied more than one would expect since the gases in the ductwork should have been thoroughly mixed. The average concentration for all six runs was 109 ppmd.[2] However, analysis of the gases from the last day's runs indicated 250 and 260 ppmd as compared to 63 and 20, 27 and 34 ppmd from the first two days.

---

[1] Non-dispersive infrared
[2] Parts per million dry gas volume

Concentrations of NO_x were 129, 96, and 96 ppmd for the three runs. Each run consisted of four grab samples, the results of which are included in Appendix A.

At no time was any SO_2 present in detectable amounts. This was expected since the kilns were fired with natural gas and the processed dolomite probably contained little, if any, sulfur inclusions.

Visible opacity was in general 0% with a few exceptions. One observer (No. 4) indicated quite a few as less than 5% on the second and third tests.

2.2 COMPARATIVE TESTING

Difficulties were experienced in getting a good comparative sample. No valid comparative data were obtained due to equipment malfunctions. EPA supplied some of the equipment to avoid potential problems in interfacing the special probe assembly with other parts of the sampling train. The difficulties were caused primarily by a leak in the EPA's meter box. Once this was fixed it was found that the meter was still malfunctioning. Finally, the meter stopped working during the second comparative test. Since the meter was not operating properly, it would be meaningless to calculate a grain loading based on the indicated gas volume. However, a copy of the comparative data can be found in the appendices.

3.0 PROCESS DESCRIPTION AND OPERATION

Limestone consists primarily of calcium carbonate or combinations of calcium and magnesium carbonate with varying amounts of impurities. Lime is a calcined or burned form of limestone, commonly divided into two basic products--quicklime and hydrated lime. Calcination expels carbon dioxide from the raw limestone, leaving calcium oxide (quicklime). With the addition of water (slaking), calcium hydroxide (hydrated lime) is formed.

In standard chemical notation, the reations are:

Calcination $CaCO_3 \xrightarrow{Heat} CaO + CO_2 \uparrow$

Hydration $CaO + H_2O \longrightarrow Ca(OH)_2$

The basic processes in production are: 1) quarrying the limestone raw material, 2) preparing the limestone for kilns by crushing and sizing, 3) calcining the limestone, and 4) optionally processing the quicklime further by additional crushing and sizing and then hydration. The majority of lime is produced in rotary kilns which can be fired by coal, oil, or gas. Rotary kilns have the advantages of high production per man-hour and a uniform product, but require higher capital investment and have higher unit fuel costs than most vertical kilns.

The Dow Chemical plant has three rotary lime kilns operating on Texas dolomitic limestone. The product quicklime is slaked to the hydrate (milk of lime) and used to precipitate magnesium hydroxide from seawater. Most of the purified magnesium hydroxide is reacted with hydrogen chloride to make magnesium chloride which is converted to magnesium metal in electrolytic cells.

There are three straight bore kilns, each 9 feet 6 inches by 265 feet, with a design capacity of 250 tons per day each. They "very seldom" run all three kilns, usually two are on line. The dolomite feed stone is brought into the plant sized one half to three quarters inch or three quarters to one and one half inches top size. There is no stone preheater. The kilns are fired with natural gas and the product quicklime is cooled to 200-300°F with satellite coolers. There is no quicklime storage, as all the product is fed into three rotating drum slakers where the milk of lime is produced.

The three kilns are provided with an electrostatic precipitator manufactured by the Western Precipitation Division of the Joy Manufacturing Company. The exit gas from the three kilns is cooled to 500°F by water sprays and enters a common plenum. From this plenum the gas is distributed to the two chambers of the precipitator by manually operated guillotine dampers. Each chamber has three fields, thirty-five gas passages, and a plate area of 35,280 square feet. From data which Dow supplied, it can be calculated (if only two kilns are in operation) that the design velocity is 2.0 feet per second and the design residence time is 10.5 seconds. Following the precipitators, the stack gases are vented to the atmosphere through 80 foot high stacks, one servicing each precipator. The complete layout is illustrated in Figures 3.1 and 3.2.

The dust collected from the precipitators is presently wasted. In the future this dust may be granulated and returned to the kiln.

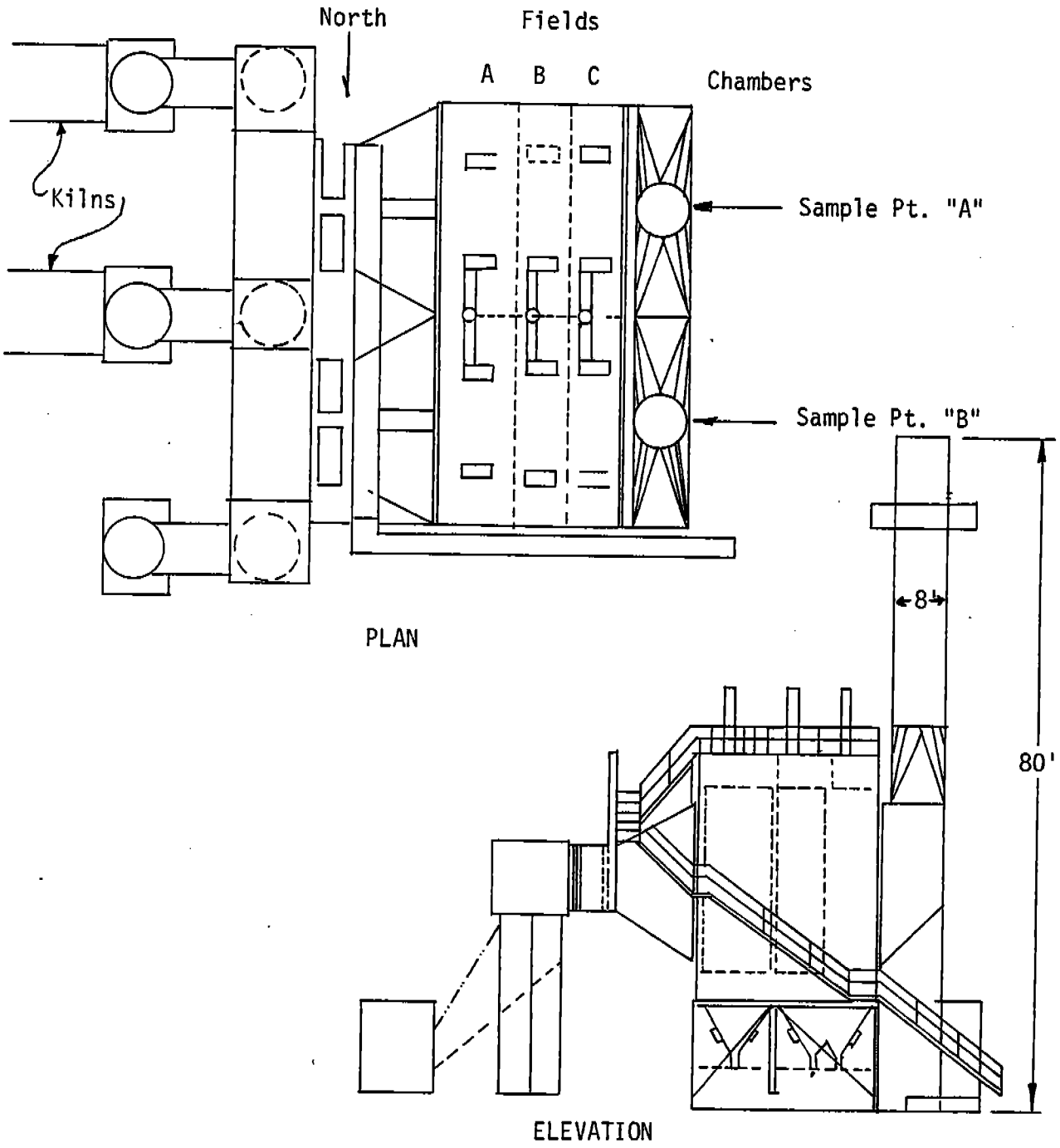

Figure 3.1. Precipitator Plan and Elevation.

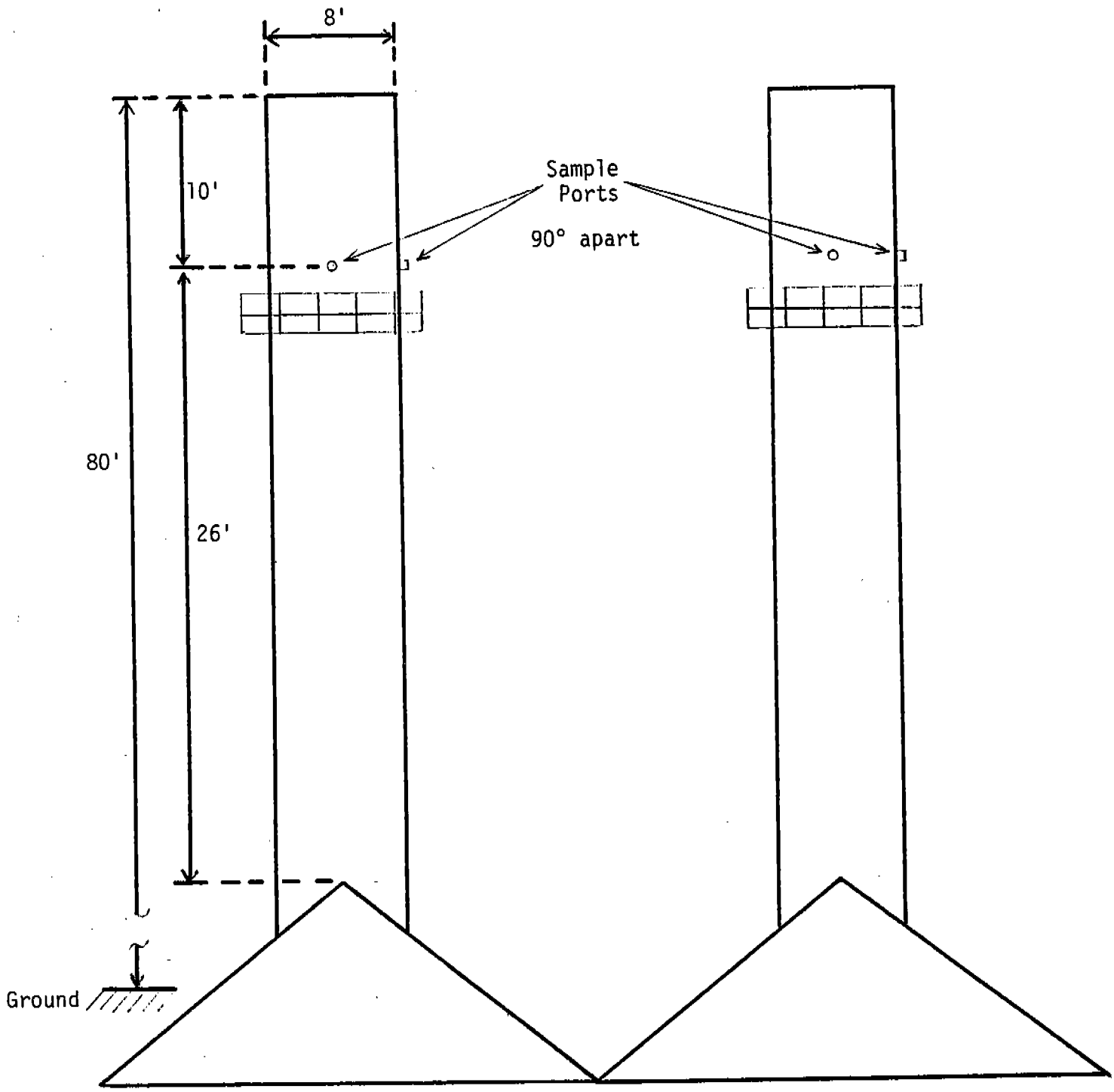

ELECTROSTATIC PRECIPITATOR

Figure 3.2 Stack Elevations

Each chamber of the precipitator has nineteen rappers, and there is one for each distribution plate. The rappers operate in sequence, one complete cycle requiring about twenty minutes.

The operation of the kilns and the electrostatic precipitator was monitored during the tests; process data are summarized in Table 3.1. It appears that the kilns operated normally throughout the test. On May 1 there was heavy rain all day and no sampling was possible. During the 3 to 11 shift on that day, the A field in the south precipitator chamber began arcing badly and was therefore removed from service and grounded. Plant personnel thought that rain may have leaked into the insulator on the top of the precipitators. On the morning of May 2, the south A field was put back on line and, although there was still some arcing, it was not serious enough to significantly affect the efficiency of the precipitator.

On May 3, the south A field was arcing and the voltage on the field was down from 275 V (on May 2) to 250-255 V. The south A field was therefore removed from service and grounded before testing began. The south chamber, during the last day of testing, was therefore operating with 57% of its normal plate area. Even with this reduced collecting surface, there were no significant visible emissions.

Table 3.1 Summary of Operating Variables.

Test No. and (Date)	1 (4/30)		2 (5/2)		3 (5/3)	
Kiln No.	2	3	2	3	2	3
Stone Feed Rate (tons/hr)	19.4	21.2	19.0	21.0	18.9	21.7
Ray O Tube Temp. (°F)	2174-2192	2192-2246	2156-2210	2156-2174	2174-2210	2156-2210
Slip Ring Temp. (°F)	1472-1490	1418-1436	1436-1460	1400-1436	1454-1490	1382-1400
Feed End Temp. (°F)	1156-1166	1256	1184-1202	1220-1229	1184-1202	1238-1256
Fan Temp. ("F)	500	536	500-518	527-536	518-536	536
Electrostatic Precipitator Data						
A Field						
Primary Current (amps)	136-140		135-137		135-137*	
Primary Voltage (volts)	260-275		250-283		290-300*	
B Field						
Primary Current (amps)	185		183-184		182-185	
Primary Voltage (volts)	230		232-235		235-240	
C Field						
Primary Current (amps)	152-155		151-153		151-153	
Primary Voltage (volts)	205-210		200-204		202-205	

*The south A field was grounded and not operating during the test.

4.0 LOCATION OF SAMPLING POINTS

As the sampling ports were located only 26 feet downstream from the precipitator exit and 10 feet from the top of the stack, it was necessary to sample 22 points on each of two diameters through two ports 90° apart in each stack (total of 44 points in each). These points were selected according to method 1 of the Federal Register which locates each point at the center of equal area zones. The exact location of these points is included in Appendix B. As mentioned previously, for the first run on the north stack, each point was inadvertently shifted 4 inches too far into the stack. Due to the length of probe in the stack, the strain on the union of probe and heated box prevented several points near the far wall of both stacks from being sampled.

5.0 SAMPLING AND ANALYTICAL PROCEDURES

5.1 PARTICULATE SAMPLING

Particulate samples were obtained using the standard EPA method 5 train without a cyclone, following the procedures specified in the December 21, 1971 Federal Register. In addition, the impinger contents were obtained and analyzed according to the appropriate procedures specified in the proposed Method 5 in the August 17, 1971 Federal Register; except that, the organic extraction was not performed.

Prior to the first run, a preliminary moisture run was made in order to obtain a moisture fraction for setting the nomograph. Subsequently, for purposes of setting the nomograph, the moisture fraction was assumed to be 18-19 percent as found from the first particulate runs.

Gas temperatures were measured before and during each test with bimetallic dial thermometers accurate to ± 5°F. These measurements were made at a single point in the stack instead of at each sampling point. There appeared to be very little temperature gradient across the stack, making a one point temperature sample sufficient.

In addition, before each run except the third run, a preliminary velocity traverse was made on one diameter of each stack for the purpose of balancing the flow rates. If necessary, damper adjustments were made under the direction of the EPA project engineer.

At the end of each run, the particulate sampling trains were moved to a nearby room for clean-up. The samples obtained were transferred to acid-washed glass storage containers with Teflon[R] seals for subsequent laboratory analysis. A description of the analysis procedures is included in Appendix C.

5.2 SO_2 SAMPLING METHODS

Since it was requested by the EPA project officer that SO_2 sampling extend the full period during which particulate samples were obtained, it was necessary to add a dry impinger between the isopropanol bubbler and first peroxide impinger to trap any diluted isopropanol carryover to prevent sample contamination. This was the only deviation from method 6, as specified in the December 21, 1971 Federal Register.

5.3 NO_x SAMPLING METHODS

Four NO_x grab samples were taken, following Method 7 as specified in the December 21, 1971 Federal Register during each particulate run on the

south stack; the arithmetic mean of these four samples is reported as the result for that run. These samples were approximately equally spaced in time during the run in order to obtain a representative average.

5.4 INTEGRATED BAG SAMPLES

An integrated bag sample was obtained from each stack during the period of the particulate runs, following Method 3 as specified in the December 21, 1971 Federal Register.

At the end of each run the bag's contents were analyzed by NDIR for CO, and for CO_2 and O_2 by gas chromatography utilizing a thermal detector. A copy of the analytical procedures is included in Appendix C along with the calibration procedure for the GC and sample calculations showing corrections for CO_2 in the CO concentrations, according to Method 10 as specified in the March 8, 1974 Federal Register.

5.5 VISUAL SMOKE OBSERVATIONS

During the first particulate tests, two visual observers were assigned to read each stack. Due to manpower requirements, this number was reduced to three observers on the second particulate test and two observers on the third. Since the opacity did not differ much from 0 at any time, it was possible to have the observers double up and read both stacks simultaneously for the last two tests. The observers followed the guidelines set forth in Method 9, as specified in the December 21, 1971 Federal Register.

5.6 COMPARATIVE TESTING

Two probes were attached to a common pitot tube which allowed isokinetic sampling at approximately the same point in the stack. The in-stack

filter train differed from the method 5 train in that an additional in-stack filter holder was placed directly behind the nozzle. The remainder of the sampling equipment remained unchanged. Equipment difficulties prevented obtaining valid results.

APPENDIX A

CALCULATED EMISSIONS DATA

EXPLANATION OF E.E.I. SOURCE SAMPLING CALCULATION SHEET

PB - Barometric pressure, inches Hg
PS - Stack pressure, inches Hg
AS - Stack area, sq. ft.
AS'- Effective area of positive stack gas flow, sq. feet
NPTS - Number of traverse points where the pitot velocity head was greater than zero
TS - Stack temperature, ^{o}R
TM - Meter temperature, ^{o}R
$\bar{H}$ - Average square root of velocity head, $\sqrt{\text{inches } H_2O}$
$\bar{\Delta H}$ - Average meter orifice pressure differential, inches H_2O
AN - Sampling nozzle area, square feet
CP - S-type pitot tube correction factor
VM - Recorded meter volume sample, cubic feet (meter conditions)
VC - Condensate and silica gel increase in impingers, milliliters
P_o - Pressure at the dry test meter orifice, $\left(PB + \frac{\Delta H}{13.6}\right)$ inches Hg
STP- Standard conditions, dry, $70^{o}F$, 29.92 inches Hg

- - - - - - - - - - -

VWV- Conversion of condensate in milliliters to water vapor in cubic feet (STP)
VSTPD- Volume sampled, cubic feet (STP)
VT- Total water vapor volume and dry gas volume sampled, cubic feet (STP)
W- Moisture fraction of stack gas
FDA- Dry gas fraction
- Assumed moisture from preliminary check
MD- Molecular weight of stack gas, lbs/lb-mole (dry conditions)
MS- Molecular weight of stack gas, lbs/lb-mole (stack conditions)
GS- Specific gravity of stack gas, referred to air
EA- Excess air, %
$\sqrt{H \times TS}$- Average square root of velocity head times stack temperature
U- Stack gas velocity, feet per minute
QS- Stack gas flow rate, cubic feet per minute (stack conditions)
QD- Stack gas flow rate, cubic feet per minute (dry conditions)
QSTPD- Stack gas flow rate, cubic feet per minute (STP)
PISO- Percent isokinetic volume sampled (method described in Federal Register)
ESTP- Pollutant concentration, grains per std. cubic feet
E12- Pollutant concentration, grains per std. cubic feet (Corrected to 12% CO_2)
E50- Pollutant concentration, grains per std. cubic feet (Corrected to 50% EA)
EM- Pollutant emission rate, lbs. per hour

NOZZLE CALIBRATIONS

During the last day of testing (May 3) the nozzles used for sampling were calibrated for internal diameters. This was done as instructed by the EPA Project Officer by measuring three diameters (I.D.) on each of the nozzles used and averaging to determine the mean diameter; these measurements were made with calipers accurate to 0.001 inch. The 1/4 inch nozzle used during the first test North stack had mean diameter of 0.240 inch. The two-3/8 inch nozzles used for the remainder of the tests were nearly identical having a mean I.D. of 0.366 inch each.

SOURCE EMISSION TEST DATA

TEST NUMBER -
PLANT NAME -
SOURCE TESTED -
TYPE OF PLANT -
CONTROL EQUIPMENT-
POLLUTANT SAMPLED-

	NORTH	SOUTH	
1)RUN NUMBER	1	1	
2)DATE	4/30/74	4/30/74	
3)TIME BEGAN	16:20	16:20	
4)TIME END	18:49	18:58	
5)T - NET TIME OF TEST, MINUTES	120	126	
6)PB- BAROMETRIC PRESSURE, IN HG	30.28	30.28	
7)PS- STACK PRESSURE, IN HG	30.28	30.28	
8)ΔH- GAS MTR ORIFICE PRESS DROP, ''H2O	0.44	2.07	
9)TM -GAS METER AVG TEMP, DEG F	93.6	89.3	
10)VC -TOTAL H2O COLLECTED, ML	207.4	434.9	
11)VWV-VOL H2O VAPOR COLL.,CU FT,STP	9.83	20.61	
12)VM -VOL DRY GAS SAMPLED,CU FT,MTR COND	44.729	101.514	
13)VSTPD-VOL DRY GAS SAMPLED,CU FT,STP	43.386	99.62	
14)W(PCT)-STACK GAS MOISTURE,PCT VOL	18.5	17.1	
15)TS- AVG STACK GAS TEMPERATURE, DEG F	372.5	449.3	
16)CO2-STACK GAS CO2, PCT VOL	10	8.7	
17) O2-STACK GAS O2, '' ''	11.1	12.2	
18) CO-STACK GAS CO, '' ''	0	0	
19) N2-STACK GAS N2, '' ''	78.9	79.1	
20) EA-STACK GAS EXCESS AIR, PCT VOL	112.	138.	
21)MD - STACK GAS MOLECULAR WEIGHT, DRY	30.04	29.88	
22)MS - STACK GAS MOLECULAR WGHT,STK COND	27.82	27.84	
23)GS - STACK GAS SPECIFIC GRAV,REF AIR	0.96	0.96	
24) H - AVG SQUARE ROOT VEL HEAD,'' H2O	0.44	0.441	
25)AVG SQUARE ROOT(STK TEMP×VEL HEAD)	12.7	13.291	
26)CP - PITOT TUBE CORRECTION FACTOR	0.83	0.83	
27) U - STACK GAS VELOCITY, FT/MIN	1861.1	1946.9	
28) AS- STACK AREA, SQUARE FEET	50.27	50.27	
29)AS'- EFFECTIVE STACK AREA, SQ FEET	50.27	50.27	
30)QS - STK GAS FLOW RT,CU FT/MIN,STK CND	93559	97870	
31)QSTPD-STK GAS FLOW RATE,CU FT/MIN,STP	49144	47834	
32)DN - SAMPLING NOZZLE DIAMETER, IN	0.24	0.366	
33)AN - SAMPLING NOZZLE AREA, SQ FT	0.00031	0.00073	
34)PCT ISO-ISOKINETIC SAMPLING, PERCENT	127.7	119.3	

S. T. P. ↔DRY, 70 DEGREES F, 29.92 INCHES MERCURY

SOURCE EMISSION TEST DATA

TEST NUMBER -
PLANT NAME -
SOURCE TESTED -
TYPE OF PLANT -
CONTROL EQUIPMENT-
POLLUTANT SAMPLED-

	NORTH	SOUTH
1)RUN NUMBER	2	2
2)DATE	5/2/74	5/2/74
3)TIME BEGAN	11:43	11:47
4)TIME END	16:00	16:05
5)T - NET TIME OF TEST, MINUTES	200	200
6)PB- BAROMETRIC PRESSURE, IN HG	30.2	30.2
7)PS- STACK PRESSURE, IN HG	30.2	30.2
8)ΔH- GAS MTR ORIFICE PRESS DROP, ''H2O	1.69	1.45
9)TM -GAS METER AVG TEMP, DEG F	104.7	89
10)VC -TOTAL H2O COLLECTED, ML	591.9	604.6
11)VWV-VOL H2O VAPOR COLL.,CU FT,STP	28.06	28.66
12)VM -VOL DRY GAS SAMPLED,CU FT,MTR COND	138.054	134.629
13)VSTPD-VOL DRY GAS SAMPLED,CU FT,STP	131.334	131.658
14)W(PCT)-STACK GAS MOISTURE,PCT VOL	17.6	17.9
15)TS- AVG STACK GAS TEMPERATURE, DEG F	361.1	411.5
16)CO2-STACK GAS CO2, PCT VOL	9.7	10.4
17) O2-STACK GAS O2, '' ''	11.3	9.7
18) CO-STACK GAS CO, '' ''	0	0
19) N2-STACK GAS N2, '' ''	79	79.9
20) EA-STACK GAS EXCESS AIR, PCT VOL	116.	84.
21)MD - STACK GAS MOLECULAR WEIGHT, DRY	30	30.05
22)MS - STACK GAS MOLECULAR WGHT,STK COND	27.89	27.9
23)GS - STACK GAS SPECIFIC GRAV,REF AIR	0.96	0.96
24) H - AVG SQUARE ROOT VEL HEAD,'' H2O	0.405	0.392
25)AVG SQUARE ROOT(STK TEMP×VEL HEAD)	11.608	11.565
26)CP - PITOT TUBE CORRECTION FACTOR	0.83	0.83
27) U - STACK GAS VELOCITY, FT/MIN	1701.2	1694.6
28) AS- STACK AREA, SQUARE FEET	50.27	50.27
29)AS'- EFFECTIVE STACK AREA, SQ FEET	50.27	50.27
30)QS - STK GAS FLOW RT,CU FT/MIN,STK CND	85521	85190
31)QSTPD-STK GAS FLOW RATE,CU FT/MIN,STP	45911	42945
32)DN - SAMPLING NOZZLE DIAMETER, IN	0.366	0.366
33)AN - SAMPLING NOZZLE AREA, SQ FT	0.00073	0.00073
34)PCT ISO-ISOKINETIC SAMPLING, PERCENT	103.2	110.5

S. T. P. ↔DRY, 70 DEGREES F, 29.92 INCHES MERCURY

SOURCE EMISSION TEST DATA

TEST NUMBER -
PLANT NAME -
SOURCE TESTED -
TYPE OF PLANT -
CONTROL EQUIPMENT-
POLLUTANT SAMPLED-

	NORTH	SOUTH	
1)RUN NUMBER	3	3	
2)DATE	5/3/74	5/3/74	
3)TIME BEGAN	9:35	9:35	
4)TIME END	13:20	13:00	
5)T - NET TIME OF TEST, MINUTES	200	195	
6)PB- BAROMETRIC PRESSURE, IN HG	30	30	
7)PS- STACK PRESSURE, IN HG	30	30	
8)ΔH- GAS MTR ORIFICE PRESS DROP, ''H2O	1.73	1.64	
9)TM -GAS METER AVG TEMP, DEG F	98.5	84.4	
10)VC -TOTAL H2O COLLECTED, ML	625.6	658.2	
11)VWV-VOL H2O VAPOR COLL.,CU FT,STP	29.65	31.2	
12)VM -VOL DRY GAS SAMPLED,CU FT,MTR COND	139.929	138.906	
13)VSTPD-VOL DRY GAS SAMPLED,CU FT,STP	133.715	136.149	
14)W(PCT)-STACK GAS MOISTURE,PCT VOL	18.2	18.6	
15)TS- AVG STACK GAS TEMPERATURE, DEG F	365.9	405.8	
16)CO2-STACK GAS CO2, PCT VOL	8.1	10	
17) O2-STACK GAS O2, '' ''	10.8	9.8	
18) CO-STACK GAS CO, '' ''	0	0	
19) N2-STACK GAS N2, '' ''	81.1	80.2	
20) EA-STACK GAS EXCESS AIR, PCT VOL	100.	85	
21)MD - STACK GAS MOLECULAR WEIGHT, DRY	29.73	29.99	
22)MS - STACK GAS MOLECULAR WGHT,STK COND	27.6	27.76	
23)GS - STACK GAS SPECIFIC GRAV,REF AIR	0.95	0.96	
24) H - AVG SQUARE ROOT VEL HEAD,'' H2O	0.412	0.42	
25)AVG SQUARE ROOT(STK TEMP×VEL HEAD)	11.836	12.349	
26)CP - PITOT TUBE CORRECTION FACTOR	0.83	0.83	
27) U - STACK GAS VELOCITY, FT/MIN	1749.6	1820.2	
28) AS- STACK AREA, SQUARE FEET	50.27	50.27	
29)AS'- EFFECTIVE STACK AREA, SQ FEET	50.27	50.27	
30)QS - STK GAS FLOW RT,CU FT/MIN,STK CND	87951	91500	
31)QSTPD-STK GAS FLOW RATE,CU FT/MIN,STP	46318	45693	
32)DN - SAMPLING NOZZLE DIAMETER, IN	0.366	0.366	
33)AN - SAMPLING NOZZLE AREA, SQ FT	0.00073	0.00073	
34)PCT ISO-ISOKINETIC SAMPLING, PERCENT	104.1	110.3	

S, T, P, ↔DRY, 70 DEGREES F, 29.92 INCHES MERCURY

environmental science and engineering, inc.

[illegible]

PLANT- DOW CHEMICAL — DATE- 4/30/74
STACK- LIME KILN OUTLET - NORTH STACK — RUN 1 FROM 16:20-18:49
WEATHER CONDITIONS- — PB- 30.28 IN HG — PS- 30.28 IN H
AS'- 50.27 SQ. FEET — TS- 832.5 DEGREES R — TM- 553.6 DEGREES R — H- 0.44 IN H2O
ΔH- 0.44 IN H2O — AN- 0.000314 SQ FT — CP- 0.83 — VM- 44.729 CF — VC- 207.4 ML
TOTAL TIME- 120 MIN — NPTS- 40 — ORSAT: CO2-10.00 — O2-11.10 — CO- 0 — N2-78.

VMT = (0.0474)×(VC)	1) 9.831	SCF
VSTPD = ((530)÷(TM)×(PB+(ΔH÷13.6)))÷(29.92×TM)	2) 43.386	SCF
VT = (VMT) + (VSTPD)	3) 53.217	SCF
F = (VMT) ÷ (VT)	4) 0.185	
FDA = (1.0 - F)	5) 0.815	
ASSUMED MOISTURE FRACTION	6) 0.14	
MW = (.44×CO2) + (.32×O2) + (.28×(CO+N2))	7) 30.04	
MD = (MW×FDA) + (18×F)	8) 27.82	
D = (MS) ÷ (28.96)	9) 0.96	
EA = (100)×(O2-0.5×CO)÷((0.266×N2)-(O2-0.5×CO))	10) 112.	%
VG(√(G×TS)) = (1÷F)×SQR(√(F×TS))	11) 12.7	
Q = (174×CP×(√(29.92÷PS×GS)))×AVG(√(F×TS))	12) 1861.1	FPM
U = (U) × (AS')	13) 93559	ACFM
QD = (QS) × (FDA)	14) 76276	CFM
QSTPD= (QD) × (530÷TS) × (PS÷29.92)	15) 49144	SCFM
MIGO = ((0.00267×VC×TS)+(PO×TS×VM÷TM)) ÷ (TIME×U×PS×AN)	16) 127.7	%

POLLUTANT CONCENTRATIONS, AT S. T. P.
MG/SCM (MG/CU MTR)= (35.31)×(MG)÷(VSTPD)
GR/SCF (S.T.P.) = (.0154)×(MG)÷(VSTPD)
POLLUTANT CONCENTRATIONS, AT STACK CONDITIONS
MG/ACM (MG/CU MTR)= ((625.3)×(MG)×(PS)×(FDA))÷((VSTPD)×(TS))
GR/ACF (STK COND) = ((0.273)×(MG)×(PS)×(FDA))÷((VSTPD)×(TS))
POLLUTANT EMISSION RATE, POUNDS/HOUR
LBS/HR = ((1.323E-4)×(MG)×(QSTPD))÷(VSTPD)

	MG	GR/SCF	GR/ACF	MG/SCM	MG/ACM	LBS/HR
FH -	18.9	0.0067	0.0035	15.38	8.08	2.83
FILTER -	27.8	0.0099	0.0052	22.63	11.88	4.17
BHW -	17.4	0.0062	0.0032	14.16	7.44	2.61
BHA -	20.1	0.0071	0.0038	16.36	8.59	3.01
TOTALS -	84.2	0.0299	0.0157	68.53	35.99	12.62

COMMENTS : _____

TEST CONDUCTED BY : _____

ENVIRONMENTAL SCIENCE AND ENGINEERING, INC.
SOURCE SAMPLING CALCULATIONS
PARTICULATE EMISSIONS

PLANT- DOW CHEMICAL — DATE- 4/30/74
STACK- SOUTH LIME KILN OUTLET — RUN 1 FROM 16:20-18:58
WEATHER CONDITIONS- — PB- 30.28 IN HG — PS- 30.28 IN HG
AS'- 50.27 SQ. FEET — TS- 909.3 DEGREES R — TM- 549.3 DEGREES R — H- 0.441 IN H2O
DH- 2.07 IN H2O — AN- 0.000731 SQ FT — CP- 0.83 — VM- 101.514 CF — VC- 434.9 ML
TOTAL TIME- 126 MIN — NPTS- 42 — ORSAT: CO2- 8.70 — O2-12.20 — CO- 0 — N2-79.10

VWW = (0.0474)×(VC)	1) 20.614	SCF
VSTPD = ((530)×(VM)×(PB+(DH÷13.6)))÷(29.92×TM)	2) 99.62	SCFD
VT = (VWW) + (VSTPD)	3) 120.234	SCF
W = (VWW) ÷ (VT)	4) 0.171	
FDA = (1.0 - W)	5) 0.829	
ASSUMED MOISTURE FRACTION	6) 0.14	
MD = (.44×CO2) + (.32×O2) + (.28×(CO+N2))	7) 29.88	
MS = (MD×FDA) + (18×W)	8) 27.84	
GS = (MS) ÷ (28.99)	9) 0.96	
EA = (100)×(O2-0.5×CO)÷((0.266×N2)-(O2-0.5×CO))	10) 138.	%
AVG(√(H×DS)) = (1÷N)×SUM(√(H×DS))	11) 13.291	
U = (174×CP×(√(29.92÷PS×GS)))×AVG(√(H×DS))	12) 1946.9	FPM
QS = (U) × (AS')	13) 97870	ACFM
QD = (QS) × (FDA)	14) 81090	CFMD
QSTPD = (QD) × (530÷TS) × (PS÷29.92)	15) 47834	SCFD
EISO = ((0.00267×VC×TS)+(PO×TS×VM÷TM)) ÷ (TIME×U×PS×AN)	16) 119.3	%

POLLUTANT CONCENTRATIONS, AT S. T. P.
MG/SCM (MG/CU MTR) = (35.31)×(MG)÷(VSTPD)
GR/SCF (S.T.P.) = (.0154)×(MG)÷(VSTPD)
POLLUTANT CONCENTRATIONS, AT STACK CONDITIONS
MG/ACM (MG/CU MTR) = ((625.3)×(MG)×(PS)×(FDA))÷((VSTPD)×(TS))
GR/ACF (STK COND) = ((0.273)×(MG)×(PS)×(FDA))÷((VSTPD)×(TS))
POLLUTANT EMISSION RATE, POUNDS/HOUR
LBS/HR = ((1.323E-4)×(MG)×(QSTPD))÷(VSTPD)

MG		GR/SCF	GR/ACF	MG/SCM	MG/ACM	LBS/HR
H	- 9.9	0.0015	0.0007	3.51	1.71	0.63
TLTER	- 29.6	0.0046	0.0022	10.49	5.13	1.88
W	- 18.6	0.0029	0.0014	6.59	3.22	1.18
A	- 5.8	0.0009	0.0004	2.06	1.00	0.37
OTALS	- 63.9	0.0099	0.0047	22.65	11.07	4.06

COMMENTS : _____

TEST CONDUCTED BY : _____

environmental science and engineering, inc.

ENVIRONMENTAL SCIENCE AND ENGINEERING, INC.
ROCKET SOURCE CALCULATIONS
PARTICULATE EMISSIONS

PLANT- DOW CHEMICAL
STACK- LIME KILN OUTLET - NORTH STACK
WEATHER CONDITIONS-

DATE- 5/2/74
RUN 2 FROM 11:43-16:00

S'- 50.27 SQ. FEET TS- 821.1 DEGREES R TM- 564.7 DEGREES R PB- 30.2 IN HG PS- 30.2 IN HG H- 0.405 IN H2O
H- 1.69 IN H2O AN- 0.000731 SQ FT CP- 0.83 VM- 138.054 CF VC- 591.9 ML
TOTAL TIME- 200 MIN NPTS- 40 ORSAT: CO2- 9.70 O2-11.30 CO- 0 N2- 79

VWW = (0.0474)×(VC)	1) 28.056	SCF
VSTPD = ((530)×(VM)×(PB+(H÷13.6)))÷(29.92×TM)	2) 131.334	SCFD
VT = (VWW) + (VSTPD)	3) 159.391	SCF
W = (VWW) ÷ (VT)	4) 0.176	
FDA = (1.0 - W)	5) 0.824	
ASSUMED MOISTURE FRACTION	6) 0.18	
MD = (.44×CO2) + (.32×O2) + (.28×(CO+N2))	7) 30	
MC = (MD×FDA) + (18×W)	8) 27.89	
CS = (MS) ÷ (28.99)	9) 0.96	
EA = (100)×(O2-0.5×CO)÷((0.266×N2)-(O2-0.5×CO))	10) 116.	%
AVG(√(H×PS)) = (1÷N)×SUM(√(T×PS))	11) 11.608	
U = (174×CP×(√(29.92÷PS×CS)))×AVG(√(H×TS))	12) 1701.2	FPM
QS = (U) × (AS')	13) 85521	ACFM
QD = (QS) × (FDA)	14) 70468	CFMD
QSTPD = (QD) × (530÷TS) × (PS÷29.92)	15) 45911	SCFM
PISO = ((0.00267×VC×TS)+(PO×TS×VM÷TM)) ÷ (TINT×U×PS×AN)	16) 103.2	%

POLLUTANT CONCENTRATIONS, AT S. T. P.
MG/SCM (MG/CU MTR)= (35.31)×(MG)÷(VSTPD)
GR/SCF (S.T.P.) = (.0154)×(MG)÷(VSTPD)
POLLUTANT CONCENTRATIONS, AT STACK CONDITIONS
MG/ACM (MG/CU MTR)= ((625.3)×(MG)×(PS)×(FDA))÷((VSTPD)×(TS))
GR/ACF (STK COND) = ((0.273)×(MG)×(PS)×(FDA))÷((VSTPD)×(TS))
POLLUTANT EMISSION RATE, POUNDS/HOUR
LBS/HR = ((1.323E-4)×(MG)×(QSTPD))÷(VSTPD)

MG		GR/SCF	GR/ACF	MG/SCM	MG/ACM	LBS/HR
TH -	14.6	0.0017	0.0009	3.93	2.11	0.68
FILTER -	16.0	0.0019	0.0010	4.30	2.31	0.74
HW -	10.6	0.0012	0.0007	2.85	1.53	0.49
HA -	8.2	0.0010	0.0005	2.20	1.18	0.38
TOTALS -	49.4	0.0058	0.0031	13.28	7.13	2.28

COMMENTS : _____

TEST CONDUCTED BY : _____

ENVIRONMENTAL SCIENCE AND ENGINEERING, INC.
ISOKINETIC SAMPLING CALCULATIONS
PARTICULATE EMISSIONS

PLANT- DOW CHEMICAL — DATE- 5/2/74
STACK- SOUTH LIME KILN OUTLET — RUN 2 FROM 11:47-16:05
WEATHER CONDITIONS- — PB- 30.2 IN HG — PS- 30.2 IN HG
AS'- 50.27 SQ. FEET — TS- 871.5 DEGREES R — TM- 549 DEGREES R — H- 0.392 IN H2O
ΔH- 1.45 IN H2O — AN- 0.000731 SQ FT — CP- 0.83 — VM- 134.629 CF — VC- 604.6 ML
TOTAL TIME- 200 MIN — NPTS- 40 — ORSAT: CO2-10.40 — O2- 9.70 — CO- 0 — N2-79.90

VMV = (0.0473)×(VC)	1) 28.658	SCF
VMSTPD = ((530)×(VM)×(PB+(ΔH÷13.6)))÷(29.92×TM)	2) 131.658	SCFD
VT = (VMV) + (VMSTPD)	3) 160.316	SCF
W = (VMV) ÷ (VT)	4) 0.179	
FDA = (1.0 - W)	5) 0.821	
ASSUMED MOISTURE FRACTION	6) 0.19	
MD = (.44×CO2) + (.32×O2) + (.28×(CO+N2))	7) 30.05	
MS = (MD×FDA) + (18×W)	8) 27.9	
GS = (MS) ÷ (28.99)	9) 0.96	
EA = (100)×(O2-0.5×CO)÷((0.266×N2)-(O2-0.5×CO))	10) 84	%
AVG(√(H×TS)) = (1÷N)×SUM(√(H×TS))	11) 11.565	
U = (174×CP×(√(29.92÷PS×GS)))×AVG(√(H×TS))	12) 1694.6	FPM
QS = (U) × (AS')	13) 85190	ACFM
QD = (QS) × (FDA)	14) 69961	CFMD
QSTPD= (QD) × (530÷TS) × (PS÷29.92)	15) 42945	SCFM
PISO = ((0.00267×VC×TS)+(PO×TS×VM÷TM)) ÷ (TIME×U×PS×AN)	16) 110.5	%

POLLUTANT CONCENTRATIONS, AT S. T. P.
MG/SCM (MG/CU MTR)= (35.31)×(MG)÷(VSTPD)
GR/SCF (S.T.P.) = (.0154)×(MG)÷(VSTPD)
POLLUTANT CONCENTRATIONS, AT STACK CONDITIONS
MG/ACM (MG/CU MTR)= ((625.3)×(MG)×(PS)×(FDA))÷((VSTPD)×(TS))
GR/ACF (STK COND) = ((0.273)×(MG)×(PS)×(FDA))÷((VSTPD)×(TS))
POLLUTANT EMISSION RATE, POUNDS/HOUR
LBS/HR = ((1.323E-4)×(MG)×(QSTPD))÷(VSTPD)

	MG	GR/SCF	GR/ACF	MG/SCM	MG/ACM	LBS/HR
	- 7.8	0.0009	0.0005	2.09	1.05	0.34
ILTER	- 14.1	0.0016	0.0008	3.78	1.91	0.61
W	- 78.6	0.0092	0.0046	21.08	10.62	3.39
A	- 25.9	0.0030	0.0015	6.95	3.50	1.12
TALS	- 126.4	0.0147	0.0074	33.90	17.08	5.45

COMMENTS : _____

TEST CONDUCTED BY : _____

environmental science and engineering, inc.

ENVIRONMENTAL SCIENCE AND ENGINEERING, INC.
SOURCE SAMPLING CALCULATIONS
PARTICULATE EMISSIONS

PLANT- DOW CHEMICAL — DATE- 5/3/74
STACK- LIME KILN OUTLET + NORTH STACK — RUN 3 FROM 9:35-13:20
WEATHER CONDITIONS- — PB- 30 IN HG — PS- 30 IN HG
AS'- 50.27 SQ. FEET — TS- 825.9 DEGREES R — TM- 558.5 DEGREES R — H- 0.412 IN H2O
DH- 1.73 IN H2O — AN- 0.000731 SQ FT — CP- 0.83 — VM- 139.929 CF — VC- 625.6 ML
TOTAL TIME- 200 MIN — NPTS- 40 — ORSAT: CO2- 8.10 — O2-10.80 — CO- 0 — N2-81.10

VWV = (0.0474)×(VC)	1) 29.653	SCF
VSTPD = ((530)×(VM)×(PB+(AH÷13.6)))÷(29.92×TM)	2) 133.715	SCFD
VT = (VWV) + (VSTPD)	3) 163.368	SCF
W = (VWV) ÷ (VT)	4) 0.182	
FDA = (1.0 - W)	5) 0.818	
ASSUMED MOISTURE FRACTION	6) 0.18	
MD = (.44×CO2) + (.32×O2) + (.28×(CO+N2))	7) 29.73	
MS = (MD×FDA) + (18×W)	8) 27.6	
CS = (MS) ÷ (28.99)	9) 0.95	
EA = (100)×(O2-0.5×CO)÷((0.266×N2)-(O2-0.5×CO))	10) 100.	%
AVG(√(H×TS)) = (1÷N)×SUM(√(H×TS))	11) 11.836	
U = (174×CP×(√(29.92÷PS×GS)))×AVG(√(H×TS))	12) 1749.6	FPM
QS = (U) × (AS')	13) 87951	ACFM
QD = (QS) × (FDA)	14) 71987	CFMD
QSTPD= (QD) × (530÷TS) × (PS÷29.92)	15) 46318	SCFM
PISO = ((0.00267×VC×TS)+(PO×TS×VM÷TM)) ÷ (TIME×U×PS×AN)	16) 104.1	%

POLLUTANT CONCENTRATIONS, AT S. T. P.
MG/SCM (MG/CU MTR)= (35.31)×(MG)÷(VSTPD)
GR/SCF (S.T.P.) = (.0154)×(MG)÷(VSTPD)
POLLUTANT CONCENTRATIONS, AT STACK CONDITIONS
MG/ACM (MG/CU MTR)= ((625.3)×(MG)×(PS)×(FDA))÷((VSTPD)×(TS))
GR/ACF (STK COND) = ((0.273)×(MG)×(PS)×(FDA))÷((VSTPD)×(TS))
POLLUTANT EMISSION RATE, POUNDS/HOUR
LBS/HR = ((1.323E-4)×(MG)×(QSTPD))÷(VSTPD)

MG		GR/SCF	GR/ACF	MG/SCM	MG/ACM	LBS/HR
H	- 27.5	0.0032	0.0017	7.26	3.82	1.26
ILTER	- 23.7	0.0027	0.0014	6.26	3.29	1.09
W	- 15.4	0.0018	0.0009	4.07	2.14	0.71
A	- 4.6	0.0005	0.0003	1.21	0.64	0.21
OTALS	- 71.2	0.0082	0.0043	18.80	9.90	3.26

COMMENTS : _____

TEST CONDUCTED BY : _____

environmental science and engineering, inc.

ENVIRONMENTAL SCIENCE AND ENGINEERING, INC.
INPUT PARTICLE CALCULATIONS
PARTICULATE EMISSIONS

PLANT- DOW CHEMICAL — DATE- 5/3/74
STACK- SOUTH LIME KILN — RUN 3 FROM 9:35-13:00
WEATHER CONDITIONS- — PB- 30 IN HG — PS- 30 IN HG
AS'- 50.27 SQ. FEET — TS- 865.8 DEGREES R — TM- 544.4 DEGREES R — H- 0.42 IN H2O
DH- 1.64 IN H2O — AN- 0.000731 SQ FT — CP- 0.83 — VM- 138.906 CF — VC- 658.2 ML
TOTAL TIME- 195 MIN — NPTS- 39 — ORSAT: CO2-10.00 — O2- 9.80 — CO- 0 — N2-80.20

VWV = (0.0474)×(VC)	1) 31.199	SCF
VSTPD = ((530)×(VM)×(PB+(ΔH÷13.6)))÷(29.92×TM)	2) 136.149	SCFD
VT = (VWV) + (VSTPD)	3) 167.347	SCF
W = (VWV) ÷ (VT)	4) 0.186	
FDA = (1.0 - W)	5) 0.814	
ASSUMED MOISTURE FRACTION	6) 0.18	
MD = (.44×CO2) + (.32×O2) + (.28×(CO+N2))	7) 29.99	
MS = (MD×FDA) + (18×W)	8) 27.76	
GS = (MS) ÷ (28.99)	9) 0.96	
EA = (100)×(O2-0.5×CO)÷((0.266×N2)-(O2-0.5×CO))	10) 85	%
AVG(√(H×TS)) = (1÷N)×SUM(√(H×TS))	11) 12.349	
U = (174×CP×(√(29.92÷PS×GS)))×AVG(√(H×TS))	12) 1820.2	FPM
QS = (U) × (AS')	13) 91500	ACFM
QD = (QS) × (FDA)	14) 74441	CFM
QSTPD = (QD) × (530÷TS) × (PS÷29.92)	15) 45693	SCFD
PISO = ((0.00267×VC×TS)+(PO×TS×VM÷TM)) ÷ (TIME×U×PS×AN)	16) 110.3	%

POLLUTANT CONCENTRATIONS, AT S. T. P.
MG/SCM (MG/CU MTR)= (35.31)×(MG)÷(VSTPD)
GR/SCF (S.T.P.) = (.0154)×(MG)÷(VSTPD)
POLLUTANT CONCENTRATIONS, AT STACK CONDITIONS
MG/ACM (MG/CU MTR)= ((625.3)×(MG)×(PS)×(FDA))÷((VSTPD)×(TS))
GR/ACF (STK COND) = ((0.273)×(MG)×(PS)×(FDA))÷((VSTPD)×(TS))
POLLUTANT EMISSION RATE, POUNDS/HOUR
LBS/HR = ((1.323E-4)×(MG)×(QSTPD))÷(VSTPD)

	MG	GR/SCF	GR/ACF	MG/SCM	MG/ACM	LBS/HR
H	- 11.4	0.0013	0.0006	2.96	1.48	0.51
ILTER	- 38.1	0.0043	0.0022	9.88	4.93	1.69
W	- 23.4	0.0026	0.0013	6.07	3.03	1.04
A	- 33.8	0.0038	0.0019	8.77	4.38	1.50
OTALS	- 106.7	0.0120	0.0060	27.67	13.81	4.74

COMMENTS : _____

TEST CONDUCTED BY : _____

environmental science and engineering, inc.

NOX SOURCE EMISSION TEST DATA

TEST NUMBER - 1
PLANT NAME - DOW FREEPORT
SOURCE TESTED - SOUTH LIME KILN
TYPE OF PLANT -
CONTROL EQUIPMENT- ESP
POLLUTANT SAMPLED- NO_x

1) RUN NUMBER	1	2	3
2) DATE	4/30/74	4/30/74	4/30/74
3) TIME	4:45 PM	5:15	5:50
4) FLASK NUMBER	73-284B	73-511-B	73-511 I
5) VF - FLASK AND VALVE VOLUME, ML	1920	1868	1952
6) VA - ABSORBING SOLUTION VOLUME, ML	25	25	25
7) PB - BAROMETRIC PRESSURE, IN HG	30.28	30.28	30.28
8) PS - STACK PRESSURE, IN HG	30.28	30.28	30.28
9) PI - INITIAL FLASK VACUUM, IN HG	27.7	27.7	27.7
10) PF - FINAL " " "	0.3	1.5	2.1
11) TI - INITIAL FLASK TEMPERATURE, DEG F	95	95	95
12) TF - FINAL " " " "	76	76	76
13) VSTPD - VOL OF GAS SAMPLED, ML, S.T.P.	1221.7	1602.6	1638.1
14) TS - STACK GAS TEMPERATURE, DEG F	449	449	449
15) PCT W - STACK GAS MOISTURE, PCT VOL	17.1	17.1	17.1
16) QSTPD- STK GAS FLOW RTE,CU FT/MIN,STP			
17) MNO2 - MASS OF NO2 IN SAMPLE,GM×1.0E6	89	454	256
18) MILLIGRAMS NO2/CU METER, STP	218.4	283.4	156.3
19) LBS NO2 /CU FT , STP	1.35×10^{-5}	1.75×10^{-5}	0.97×10^{-5}
20) PARTS PER MILLION OF NO2, STP	113.8	147.7	81.4
21) LBS NO2/HOUR			
22) BTU'S PER HOUR INPUT			
23) LBS NO2/MILLION BTU			

VSTPD = (17.71) × (VF-VA) ×[((PB-PI)÷TF)-((PB-PI)÷TI)]

MG NO2/CU MTR = (35.31) × (MNO2) ÷ (VSTPD)

LBS NO2/CU FT = (6.2E-5)× (MNO2) ÷ (VSTPD)

P. P. M. = (8.406E6) × (LBS NO2/CU FT)

LBS NO2/ HOUR = (60) × (QSTPD) × (LBS NO2/CU FT)

LBS NO2/MILLION BTU = (LBS NO2/HR) ÷ (MILLION BTU /HR , INPUT)

S. T. P. ←→DRY, 70 DEGREES F, 29.92 INCHES MERCURY

NOX SOURCE EMISSION TEST DATA

TEST NUMBER - 1
PLANT NAME - DOW FREEPORT
SOURCE TESTED - SO. LIME KILN
TYPE OF PLANT -
CONTROL EQUIPMENT - ESP
POLLUTANT SAMPLED - NOx

		AVG.
1) RUN NUMBER	4	
2) DATE	4/30/74	
3) TIME	6:40 pm	
4) FLASK NUMBER	2	
5) VF - FLASK AND VALVE VOLUME, ML	1935	
6) VA - ABSORBING SOLUTION VOLUME, ML	25	
7) PB - BAROMETRIC PRESSURE, IN HG	30.28	
8) PS - STACK PRESSURE, IN HG	30.28	
9) PI - INITIAL FLASK VACUUM, IN HG	27.8	
10) PF - FINAL '' '' ''	1.85	
11) TI - INITIAL FLASK TEMPERATURE, DEG F	95	
12) TF - FINAL '' '' '' ''	76	
13) VSTPD - VOL OF GAS SAMPLED, ML, S.T.P.	1610.6	
14) TS - STACK GAS TEMPERATURE, DEG F	449	
15) PCT M - STACK GAS MOISTURE, PCT VOL		
16) QSTPD - STK GAS FLOW RTE, CU FT/MIN, STP		
17) MNO2 - MASS OF NO2 IN SAMPLE, GM×1.0E6	518	
18) MILLIGRAMS NO2/CU METER, STP	334.0	248
19) LBS NO2 /CU FT , STP	2.07×10^{-5}	1.54×10^{-5}
20) PARTS PER MILLION OF NO2, STP	174.1	129.2
21) LBS NO2/HOUR		
22) BTU'S PER HOUR INPUT		
23) LBS NO2/MILLION BTU		

VSTPD = (17.71) × (VF-VA) ×[((PB-PF)÷TF)-((PB-PI)÷TI)]

MG NO2/CU MTR = (35.31) × (MNO2) ÷ (VSTPD)

LBS NO2/CU FT = (6.2E⁻5)× (MNO2) ÷ (VSTPD)

P. P. M. = (8.406E6) × (LBS NO2/CU FT)

LBS NO2/ HOUR = (60) × (QSTPD) × (LBS NO2/CU FT)

LBS NO2/MILLION BTU = (LBS NO2/HR) ÷ (MILLION BTU /HR , INPUT)

S. T. P. ←→DRY, 70 DEGREES F, 29.92 INCHES MERCURY

NOX SOURCE EMISSION TEST DATA

TEST NUMBER - 2
PLANT NAME - DOW FREEPORT
SOURCE TESTED - LIME KILN
TYPE OF PLANT -
CONTROL EQUIPMENT- ESP
POLLUTANT SAMPLED- NO_x

1)RUN NUMBER	1	2	3
2)DATE	5-2-74	5-2-74	5-2-74
3)TIME	1200	1300	1430
4)FLASK NUMBER	6	3	2
5)VF - FLASK AND VALVE VOLUME, ML	1920	1868	1935
6)VA - ABSORBING SOLUTION VOLUME, ML	25	25	25
7)PB - BAROMETRIC PRESSURE, IN HG	30.2	30.2	30.2
8)PS - STACK PRESSURE, IN HG	30.2	30.2	30.2
9)PI - INITIAL FLASK VACUUM, IN HG	25.5	27.9	27.8
10)PF - FINAL '' '' ''	2.15	1.60	2.20
11)TI - INITIAL FLASK TEMPERATURE, DEG F	90	80	85
12)TF - FINAL '' '' '' ''	74	74	74
13)VSTPD - VOL OF GAS SAMPLED, ML, S.T.P.	~~1748.5~~ 1716.6	1494.9	1623.6
14)TS - STACK GAS TEMPERATURE, DEG F	406		
15)PCT M - STACK GAS MOISTURE, PCT VOL			
16)QSTPD- STK GAS FLOW RTE,CU FT/MIN,STP			
17)MNO2 - MASS OF NO2 IN SAMPLE,GM×1.0E6	280	334	271
18)MILLIGRAMS NO2/CU METER, STP	189.6	223.4	166.9
19)LBS NO2 /CU FT , STP	1.17×10^{-5}	1.39×10^{-5}	1.03×10^{-5}
20)PARTS PER MILLION OF NO2, STP	98.9	116.4	87.0
21)LBS NO2/HOUR			
22)BTU'S PER HOUR INPUT			
23)LBS NO2/MILLION BTU			

VSTPD = (17.71) × (VF-VA) ×[((PB-PI)÷TF)-((PB-PI)÷TI)]

MG NO2/CU MTR = (35.31) × (MNO2) ÷ (VSTPD)

LBS NO2/CU FT = (6.2E-5)× (MNO2) ÷ (VSTPD)

P. P. M. = (8.406E6) × (LBS NO2/CU FT)

LBS NO2/ HOUR = (60) × (QSTPD) × (LBS NO2/CU FT)

LBS NO2/MILLION BTU = (LBS NO2/HR) ÷ (MILLION BTU /HR , INPUT)

S. T. P. ↔DRY, 70 DEGREES F, 29.92 INCHES MERCURY

NOX SOURCE EMISSION TEST DATA

TEST NUMBER - 2
PLANT NAME - DOW FREEPORT
SOURCE TESTED - KILN OUTLET
TYPE OF PLANT -
CONTROL EQUIPMENT- ESP
POLLUTANT SAMPLED- NO_x

	TEST #2		
1)RUN NUMBER	R-4	AVG	
2)DATE	5-2-74		
3)TIME	1530		
4)FLASK NUMBER	7		
5)VF - FLASK AND VALVE VOLUME, ML	1952		
6)VA - ABSORBING SOLUTION VOLUME, ML	25		
7)PB - BAROMETRIC PRESSURE, IN HG	30.2		
8)PS - STACK PRESSURE, IN HG	30.2		
9)PI - INITIAL FLASK VACUUM, IN HG	2.78		
10)PF - FINAL '' '' ''	2.15		
11)TI - INITIAL FLASK TEMPERATURE, DEG F	70		
12)TF - FINAL '' '' '' ''	74		
13)VSTPD - VOL OF GAS SAMPLED, ML, S.T.P.	1641.5		
14)TS - STACK GAS TEMPERATURE, DEG F			
15)PCT W - STACK GAS MOISTURE, PCT VOL			
16)QSTPD- STK GAS FLOW RTE,CU FT/MIN,STP			
17)MNO2 - MASS OF NO2 IN SAMPLE,GM×1.0E6	255		
18)MILLIGRAMS NO2/CU METER, STP	155.3		
19)LBS NO2 /CU FT , STP	0.97×10^{-5}		
20)PARTS PER MILLION OF NO2, STP	81.6	96	
21)LBS NO2/HOUR			
22)BTU'S PER HOUR INPUT			
23)LBS NO2/MILLION BTU			

VSTPD = (17.71) × (VF-VA) ×[((PB-PF)÷TF)-((PB-PI)÷TI)]

MG NO2/CU MTR = (35.31) × (MNO2) ÷ (VSTPD)

LBS NO2/CU FT = (6.2E⁻5)× (MNO2) ÷ (VSTPD)

P. P. M. = (8.406E6) × (LBS NO2/CU FT)

LBS NO2/ HOUR = (60) × (QSTPD) × (LBS NO2/CU FT)

LBS NO2/MILLION BTU = (LBS NO2/HR) ÷ (MILLION BTU /HR , INPUT)

S. T. P. ↔DRY, 70 DEGREES F, 29.92 INCHES MERCURY

NOX SOURCE EMISSION TEST DATA

TEST NUMBER - 3
PLANT NAME - DOW FREEPORT
SOURCE TESTED - LIME KILN OUTLET
TYPE OF PLANT -
CONTROL EQUIPMENT - ESP
POLLUTANT SAMPLED - NO_x

1) RUN NUMBER	1	2	3
2) DATE	5-3-74	5-3-74	5-3-74
3) TIME	0955	1040	1145
4) FLASK NUMBER	2	3	6
5) VF - FLASK AND VALVE VOLUME, ML	1935	1868	1920
6) VA - ABSORBING SOLUTION VOLUME, ML	25	25	25
7) PB - BAROMETRIC PRESSURE, IN HG	30.2	30.2	30.2
8) PS - STACK PRESSURE, IN HG	30.2	30.2	30.2
9) PI - INITIAL FLASK VACUUM, IN HG	28.0	28.0	28.0
10) PF - FINAL " " "	1.7	1.1	1.75
11) TI - INITIAL FLASK TEMPERATURE, DEG F	88	88	90
12) TF - FINAL " " " "	72	72	72
13) VSTPD - VOL OF GAS SAMPLED, ML, S.T.P.	1677.8	1654.8	1661.2
14) TS - STACK GAS TEMPERATURE, DEG F			
15) PCT W - STACK GAS MOISTURE, PCT VOL			
16) QSTPD - STK GAS FLOW RTE, CU FT/MIN, STP			
17) MNO2 - MASS OF NO2 IN SAMPLE, GM×1.0E6	264	260	333
18) MILLIGRAMS NO2/CU METER, STP	157.4	157.2	200.5
19) LBS NO2 /CU FT , STP	0.98×10^{-5}	0.97×10^{-5}	1.24×10^{-5}
20) PARTS PER MILLION OF NO2, STP	82.1	81.9	104.5
21) LBS NO2/HOUR			
22) BTU'S PER HOUR INPUT			
23) LBS NO2/MILLION BTU			

VSTPD = (17.71) × (VF-VA) ×[((PB-PF)÷TF)-((PB-PI)÷TI)]

MG NO2/CU MTR = (35.31) × (MNO2) ÷ (VSTPD)

LBS NO2/CU FT = (6.2E⁻5)× (MNO2) ÷ (VSTPD)

P. P. M. = (8.406E6) × (LBS NO2/CU FT)

LBS NO2/ HOUR = (60) × (QSTPD) × (LBS NO2/CU FT)

LBS NO2/MILLION BTU = (LBS NO2/HR) ÷ (MILLION BTU /HR , INPUT)

S. T. P. ↔DRY, 70 DEGREES F, 29.92 INCHES MERCURY

NOX SOURCE EMISSION TEST DATA

TEST NUMBER -
PLANT NAME -
SOURCE TESTED -
TYPE OF PLANT -
CONTROL EQUIPMENT-
POLLUTANT SAMPLED-

			AVG.
1)RUN NUMBER	4		
2)DATE	5-3-74		
3)TIME	1235		
4)FLASK NUMBER	7		
5)VF - FLASK AND VALVE VOLUME, ML	1952		
6)VA - ABSORBING SOLUTION VOLUME, ML	25		
7)PB - BAROMETRIC PRESSURE, IN HG	30.2		
8)PS - STACK PRESSURE, IN HG	30.2		
9)PI - INITIAL FLASK VACUUM, IN HG	26.7		
10)PF - FINAL '' '' ''	2.2		
11)TI - INITIAL FLASK TEMPERATURE, DEG F	84		
12)TF - FINAL '' '' '' ''	72		
13)VSTPD - VOL OF GAS SAMPLED, ML, S.T.P.	1576.7		
14)TS - STACK GAS TEMPERATURE, DEG F			
15)PCT W - STACK GAS MOISTURE, PCT VOL			
16)QSTPD- STK GAS FLOW RTE,CU FT/MIN,STP			
17)MNO2 - MASS OF NO2 IN SAMPLE,GM×1.0E6	231		
18)MILLIGRAMS NO2/CU METER, STP	146.5		
19)LBS NO2 /CU FT , STP	6.91×10^{-5}		
20)PARTS PER MILLION OF NO2, STP	115.2		
21)LBS NO2/HOUR			
22)BTU'S PER HOUR INPUT			
23)LBS NO2/MILLION BTU			

VSTPD = (17.71) × (VF-VA) ×[((PB-PI)÷TF)-((PB-PI)÷TI)]

MG NO2/CU MTR = (35.31) × (MNO2) ÷ (VSTPD)

LBS NO2/CU FT = (6.2E⁻5)× (MNO2) ÷ (VSTPD)

P. P. M. = (8.406E6) × (LBS NO2/CU FT)

LBS NO2/ HOUR = (60) × (QSTPD) × (LBS NO2/CU FT)

LBS NO2/MILLION BTU = (LBS NO2/HR) ÷ (MILLION BTU /HR , INPUT)

S. T. P. ←→DRY, 70 DEGREES F, 29.92 INCHES MERCURY

TABLE___

SULFUR DIOXIDE
EMISSION DATA

PLANT Dow Chemical, Freeport Texas

STACK N. Lime Kiln

Run No.	1	2	3
Date	4/30/74	5/2/74	5/3/74
Time of Sample	1625-1855	1150-1525	0945-1308
Barometric Pressure, "HG	30.28	30.20	30.0
Stack Pressure, "HG	30.28	30.20	30.0
Final Meter Reading, FT^3	963.179	972.400	981.565
Initial Meter Reading, FT^3	960.000	965.300	975.500
Average Meter Temp. °F	92.4	91 ~~74.00~~	89 ~~6.065~~
Average Stack Temp. °F	374	361	367
Gas Volume Sampled, FT^3, VSTPD *			
SO_2 Conc., LB/FT^3 (CSO)			
SO_2 Conc., P.P.M. (PPM)			

* VSTPD = Dry, 29.92 "HG, 70°F

$$VSTPD = VM \left(\frac{Pbar}{Pstd} \right) \left(\frac{Tstd}{TM} \right)$$

$$CSO = \left(7.05 \times 10^{-5} \times \frac{LB\text{-}L}{g\text{-}ml}\right) \frac{(VT-VTB)(N)\left(\frac{Vsoln}{VA}\right)}{VMSTD}$$

$$PPM = CSO \times 6041500$$

SOURCE EMISSION TEST DATA

Single Point Comparative Tests

TEST NUMBER -
PLANT NAME -
SOURCE TESTED -
TYPE OF PLANT -
CONTROL EQUIPMENT-
POLLUTANT SAMPLED-

	In Stack Filter Train	EPA 5 Train	
1)RUN NUMBER	1	1	
2)DATE	5/2/74	5/02/74	
3)TIME BEGAN	12:20	12:20	
4)TIME END	15:20	15:20	
5)T - NET TIME OF TEST, MINUTES	180	180	
6)PB- BAROMETRIC PRESSURE, IN HG	30.2	30.2	
7)PS- STACK PRESSURE, IN HG	30.2	30.2	
8)ΔH- GAS MTR ORIFICE PRESS DROP, ''H2O	1.48	1.48	
9)TM -GAS METER AVG TEMP, DEG F	100.4	92.7	
10)VC -TOTAL H2O COLLECTED, ML	273.5	619.2	
11)VWV-VOL H2O VAPOR COLL.,CU FT,STP	12.96	29.35	
12)VM -VOL DRY GAS SAMPLED,CU FT,MTR COND	72.001	120.427	
13)VSTPD-VOL DRY GAS SAMPLED,CU FT,STP	68.982	116.976	
14)W(PCT)-STACK GAS MOISTURE,PCT VOL	15.8	20.1	
15)TS- AVG STACK GAS TEMPERATURE, DEG F	400	400	
16)CO2-STACK GAS CO2, PCT VOL	10.4	10.4	
17) O2-STACK GAS O2, '' ''	9.7	9.7	
18) CO-STACK GAS CO, '' ''	0	0	
19) N2-STACK GAS N2, '' ''	79.9	79.9	
20) EA-STACK GAS EXCESS AIR, PCT VOL	84.	84.	
21)MD - STACK GAS MOLECULAR WEIGHT, DRY	30.05	30.05	
22)MS - STACK GAS MOLECULAR WGHT,STK COND	28.15	27.63	
23)GS - STACK GAS SPECIFIC GRAV,REF AIR	0.97	0.95	
24) H - AVG SQUARE ROOT VEL HEAD,'' H2O	0.384	0.383	
25)AVG SQUARE ROOT(STK TEMP×VEL HEAD)	11.261	11.228	
26)CP - PITOT TUBE CORRECTION FACTOR	0.83	0.83	
27) U - STACK GAS VELOCITY, FT/MIN	1642.8	1653.2	
28) AS- STACK AREA, SQUARE FEET	50.27	50.27	
29)AS'- EFFECTIVE STACK AREA, SQ FEET	50.27	50.27	
30)QS - STK GAS FLOW RT,CU FT/MIN,STK CND	82585	83105	
31)QSTPD-STK GAS FLOW RATE,CU FT/MIN,STP	43244	41326	
32)DN - SAMPLING NOZZLE DIAMETER, IN	0.375	0.375	
33)AN - SAMPLING NOZZLE AREA, SQ FT	0.00077	0.00077	
34)PCT ISO-ISOKINETIC SAMPLING, PERCENT	58.1	103	

S. T. P. ↔DRY, 70 DEGREES F, 29.92 INCHES MERCURY

SOURCE EMISSION TEST DATA
SINGLE POINT COMPARISON TEST

TEST NUMBER -
PLANT NAME -
SOURCE TESTED -
TYPE OF PLANT -
CONTROL EQUIPMENT-
POLLUTANT SAMPLED-

	EPA 5 TRAIN	IN-STACK FILTER TRAIN	
1)RUN NUMBER	2	2	
2)DATE	5/3/74	5/3/74	
3)TIME BEGAN	10:00	10:00	
4)TIME END	13:45	13:45	
5)T - NET TIME OF TEST, MINUTES	160	160	
6)PB- BAROMETRIC PRESSURE, IN HG	30	30	
7)PS- STACK PRESSURE, IN HG	30	30	
8)ΔH- GAS MTR ORIFICE PRESS DROP, ''H2O	1.63	1.41	
9)TM -GAS METER AVG TEMP, DEG F	96	89.2	
10)VC -TOTAL H2O COLLECTED, ML	95.4	547.3	
11)VWV-VOL H2O VAPOR COLL.,CU FT,STP	4.52	25.94	
12)VM -VOL DRY GAS SAMPLED,CU FT,MTR COND	39.975	95.125	
13)VSTPD-VOL DRY GAS SAMPLED,CU FT,STP	38.362	92.363	
14)W(PCT)-STACK GAS MOISTURE,PCT VOL	10.5	21.9	
15)TS- AVG STACK GAS TEMPERATURE, DEG F	410	410	
16)CO2-STACK GAS CO2, PCT VOL	10	10	
17) O2-STACK GAS O2, '' ''	9.8	9.8	
18) CO-STACK GAS CO, '' ''	0	0	
19) N2-STACK GAS N2, '' ''	80.2	80.2	
20) EA-STACK GAS EXCESS AIR, PCT VOL	85.	85	
21)MD - STACK GAS MOLECULAR WEIGHT, DRY	29.99	29.99	
22)MS - STACK GAS MOLECULAR WGHT,STK COND	28.73	27.36	
23)GS - STACK GAS SPECIFIC GRAV,REF AIR	0.99	0.94	
24) H - AVG SQUARE ROOT VEL HEAD,'' H2O	0.398	0.398	
25)AVG SQUARE ROOT(STK TEMP×VEL HEAD)	11.744	11.744	
26)CP - PITOT TUBE CORRECTION FACTOR	0.83	0.83	
27) U - STACK GAS VELOCITY, FT/MIN	1701.5	1743.4	
28) AS- STACK AREA, SQUARE FEET	50.27	50.27	
29)AS'- EFFECTIVE STACK AREA, SQ FEET	50.27	50.27	
30)QS - STK GAS FLOW RT,CU FT/MIN,STK CND	85533	87641	
31)QSTPD-STK GAS FLOW RATE,CU FT/MIN,STP	46737	41794	
32)DN - SAMPLING NOZZLE DIAMETER, IN	0.375	0.375	
33)AN - SAMPLING NOZZLE AREA, SQ FT	0.00077	0.00077	
34)PCT ISO-ISOKINETIC SAMPLING, PERCENT	33.6	90.5	

S. T. P. ↔DRY, 70 DEGREES F, 29.92 INCHES MERCURY

environmental science and engineering, inc.

Single Point Comparative Test
In-Stack Filter

ENVIRONMENTAL SCIENCE AND ENGINEERING, INC.
SOURCE SAMPLING CALCULATIONS
PARTICULATE EMISSIONS

PLANT- DOW CHEMICAL — DATE- 5/2/74
STACK- PRICIPATOR OUTLET — RUN 1 FROM 12:20-15:20
WEATHER CONDITIONS- — PB- 30.2 IN HG — PS- 30.2 IN HG
AS'- 50.27 SQ. FEET — TS- 860 DEGREES R — TM- 560.4 DEGREES R — H- 0.384 IN H2O
DH- 1.48 IN H2O — AN- 0.000767 SQ FT — CP- 0.83 — VM- 72.001 CF — VC- 273.5 ML
TOTAL TIME- 180 MIN — NPTS- 18 — ORSAT: CO2-10.40 — O2- 9.70 — CO- 0 — N2-79.90

VWV = (0.0474)×(VC)	1) 12.964	SCF
VSTPD = ((530)×(VM)×(PP+(AN÷13.6)))÷(29.92×TM)	2) 51.534	SCFD
VT = (VWV) + (VSTPD)	3) 81.946	SCF
W = (VWV) : (VT)	4) 0.158	
FDA = (1.0 - W)	5) 0.842	
ASSUMED MOISTURE FRACTION	6) 0.19	
MD = (.44×CO2) + (.32×O2) + (.28×(CO+N2))	7) 30.05	
MS = (MD×FDA) + (18×W)	8) 28.15	
US = (MS) ÷ (28.99)	9) 0.97	
EA = (100)×(O2-0.5×CO)÷((0.266×N2)-(O2-0.5×CO))	10) 84.	%
AVG(√(H×TS)) = (1÷H)×SUM(√(H×TS))	11) 11.261	
Q = (174×CP×(√(29.92÷PS×GS)))×AVG(√(H×TS))	12) 1642.8	FPM
QS = (U) × (AS')	13) 82585	ACFM
QD = (QS) × (FDA)	14) 69520	CFMD
QSTPD = (QD) × (530÷TS) × (PS÷29.92)	15) 43244	SCFD
PISO = ((0.00267×VC×TS)+(PO×TS×VM÷TM)) ÷ (TIME×U×PS×AN)	16) 58.1	%

POLLUTANT CONCENTRATIONS, AT S. T. P.
MG/SCM (MG/CU MTR)= (35.31)×(MG)÷(VSTPD)
GR/SCF (S.T.P.) = (.0154)×(MG)÷(VSTPD)
POLLUTANT CONCENTRATIONS, AT STACK CONDITIONS
MG/ACM (MG/CU MTR)= ((625.3)×(MG)×(PS)×(FDA))÷((VSTPD)×(TS))
GR/ACF (STK COND) = ((0.273)×(MG)×(PS)×(FDA))÷((VSTPD)×(TS))
POLLUTANT EMISSION RATE, POUNDS/HOUR
LBS/HR = ((1.323E-4)×(MG)×(QSTPD))÷(VSTPD)

MG		GR/SCF	GR/ACF	MG/SCM	MG/ACM	LBS/HR
NOZZLE	- 5.2	0.0012	0.0006	3.56	1.39	0.43
PROBE	- 6.4	0.0014	0.0007	4.39	1.71	0.53
FILT	- 2.6	0.0006	0.0003	1.78	0.70	0.22
FILT	- 2.2	0.0005	0.0003	1.51	0.59	0.18
HW	- 14.3	0.0032	0.0017	9.80	3.83	1.19
HA	- 8.4	0.0019	0.0009	5.76		.70
TOTALS	-	0.0088	0.0045			3.25

COMMENTS : _____

TEST CONDUCTED BY : _____

environmental science and engineering, inc.

SINGLE POINT COMPARATIVE TEST

IN-STACK FILTER TRAIN

ENVIRONMENTAL SCIENCE AND ENGINEERING, INC.
DOUBLE MATRIX CALCULATIONS
PARTICULATE EMISSIONS

PLANT- DOW FREEPORT
STACK- PRIC. OUTLET (SO)
WEATHER CONDITIONS-

DATE- 5/3/74
RUN 2 FROM 10:00-13:45

PB- 30 IN HG PS- 30 IN HG
AS'- 50.27 SQ. FEET TS- 870 DEGREES R TM- 549.2 DEGREES R H- 0.398 IN H2O
DH- 1.41 IN H2O AN- 0.000767 SQ FT CP- 0.83 VM- 95.125 CF VC- 547.3 ML
TOTAL TIME- 160 MIN NPTS- 15 ORSAT: CO2-10.00 O2- 9.80 CO- 0 N2-80.20

VMW = (0.0474)×(VC)	1) 25.942	SCF
VSTPD = ((530)×(VM)×(PB+(AH÷13.6)))÷(29.92×TM)	2) 92.363	SCFD
VT = (VMW) + (VSTPD)	3) 118.305	SCF
W = (VMW) ÷ (VT)	4) 0.219	
FDA = (1.0 - W)	5) 0.781	
ASSUMED MOISTURE FRACTION	6) 0.19	
MD = (.44×CO2) + (.32×O2) + (.28×(CO+N2))	7) 29.99	
MS = (MD×FDA) + (18×W)	8) 27.36	
GS = (MS) ÷ (28.99)	9) 0.94	
EA = (100)×(O2-0.5×CO)÷((0.266×N2)-(O2-0.5×CO))	10) 85.	%
AVG(√(H×GS)) = (1÷N)×SUM(√(H×GS))	11) 11.744	
U = (174×CP×(√(29.92÷PS×GS)))×AVG(√(H×TS))	12) 1743.4	FPM
QS = (U) × (AS')	13) 87641	ACFM
QD = (QS) × (FDA)	14) 68423	CFMD
QSTPD = (QD) × (530÷TS) × (PS÷29.92)	15) 41794	SCFM
PISO = ((0.00267×VC×TS)+(PO×TS×VM÷TM)) ÷ (TIME×U×PS×AN)	16) 90.5	%

POLLUTANT CONCENTRATIONS, AT S. T. P.

MG/SCM (MG/CU MTR) = (35.31)×(MG)÷(VSTPD)

GR/SCF (S.T.P.) = (.0154)×(MG)÷(VSTPD)

POLLUTANT CONCENTRATIONS, AT STACK CONDITIONS

MG/ACM (MG/CU MTR) = ((625.3)×(MG)×(PS)×(FDA))÷((VSTPD)×(TS))

GR/ACF (STK COND) = ((0.273)×(MG)×(PS)×(FDA))÷((VSTPD)×(TS))

POLLUTANT EMISSION RATE, POUNDS/HOUR

LBS/HR = ((1.323E-4)×(MG)×(QSTPD))÷(VSTPD)

MG		GR/SCF	GR/ACF	MG/SCM	MG/ACM	LBS/HR
NOZZLE	- 7.8	0.0013	0.0006	2.98	1.42	0.47
PROBE	- 31.6	0.0053	0.0025	12.08	5.76	1.89
F FILT	- 54.6	0.0091	0.0043	20.87	9.95	3.27
B FILT	- 1.3	0.0002	0.0001	0.50	0.24	0.08
CHW	- 25.3	0.0042	0.0020	9.67	4.61	1.51
TOTAL	- 10.7			4.09		0.64

COMMENTS : _____

TEST CONDUCTED BY : _____

environmental science and engineering, inc.

SINGLE POINT COMPARATIVE TEST

EPA 5 TRAIN

ENVIRONMENTAL SCIENCE AND ENGINEERING, INC.
DOUBLE CANDLING CALCULATIONS
PARTICULATE EMISSION

PLANT- DOW CHEMICAL
STACK- PRICIPATOR OUTLET
WEATHER CONDITIONS-

DATE- 4/30/74
RUN 1 FROM 12:20-15:20

PB- 30.2 IN HG PS- 30.2 IN HG
AS'- 50.27 SQ. FEET TS- 860 DEGREES R TM- 552.7 DEGREES R H- 0.383 IN H2O
H- 1.48 IN H2O AN- 0.000767 SQ FT CP- 0.83 VM- 120.427 CF VC- 619.2 ML
TOTAL TIME- 180 MIN NPTS- 18 ORSAT: CO2-10.40 O2- 9.70 CO- 0 N2-79.90

VWW = (0.0474)×(VC)	1) 29.35	SCF
VSTPD = ((530)×(VM)×(PB+(AH÷13.6)))÷(29.92×TM)	2) 116.976	SCFD
VT = (VWW) + (VSTPD)	3) 146.326	SCF
W = (VWW) ÷ (VT)	4) 0.201	
FDA = (1.0 - W)	5) 0.799	
ASSUMED MOISTURE FRACTION	6) 0.19	
MD = (.44×CO2) + (.32×O2) + (.28×(CO+N2))	7) 30.05	
MS = (MD×FDA) + (18×W)	8) 27.63	
GS = (MS) ÷ (28.99)	9) 0.95	
EA = (100)×(O2-0.5×CO)÷((0.266×N2)-(O2-0.5×CO))	10) 84.	%
AVG(√(H×PS)) = (1÷N)×SUM(√(H×PS))	11) 11.228	
U = (174×CP×(√(29.92÷PB×GS)))×AVG(√(H×PS))	12) 1653.2	FPM
QS = (U) × (AS')	13) 83105	ACFM
QD = (QS) × (FDA)	14) 66435	CFMD
QSTPD = (QD) × (530÷TS) × (PS÷29.92)	15) 41326	SCFM
PIGO = ((0.00267×VC×TS)÷(PO×TS×VM÷TM)) ÷ (TIME×U×PS×AN)	16) 103	%

POLLUTANT CONCENTRATIONS, AT S. T. P.
MG/SCM (MG/CU MTR)= (35.31)×(MG)÷(VSTPD)
GR/SCF (S.T.P.) = (.0154)×(MG)÷(VSTPD)
POLLUTANT CONCENTRATIONS, AT STACK CONDITIONS
MG/ACM (MG/CU MTR)= ((625.3)×(MG)×(PS)×(FDA))÷((VSTPD)×(TS))
GR/ACF (STK COND) = ((0.273)×(MG)×(PS)×(FDA))÷((VSTPD)×(TS))
POLLUTANT EMISSION RATE, POUNDS/HOUR
LBS/HR = ((1.323E-4)×(MG)×(QSTPD))÷(VSTPD)

MG		GR/SCF	GR/ACF	MG/SCF	MG/ACF	LBS/HR
Front Half -	4.8	0.0006	0.0003	1.45	0.72	0.22
Filter -	17.3	0.0023	0.0011	5.22	2.60	0.81
HW -	37.4	0.0049	0.0025	11.29	5.61	1.75
IA -	41.9	0.0055	0.0027	12.65	6.29	1.96
TOTALS -	101.4	0.0133	0.0066	30.61	15.22	4.74

COMMENTS : _____

TEST CONDUCTED BY : _____

environmental science and engineering, inc.

SINGLE POINT COMPARATIVE TEST

EPA 5 TRAIN

ENVIRONMENTAL SCIENCE AND ENGINEERING, INC.
DOUGLAS GAMBLE'S CALCULATIONS
SAMPLING EVENT

PLANT- DOW FREEPORT
STACK- PRIC. OUTLET
WEATHER CONDITIONS-

DATE- 5/3/74
RUN 2 FROM 10:00-13:45

PB- 30 IN HG PS- 30 IN HG
AS'- 50.27 SQ. FEET TS- 870 DEGREES R TM- 556 DEGREES R H- 0.398 IN H2O
DH- 1.63 IN H2O AN- 0.000767 SQ FT CP- 0.83 VM- 39.975 CF VC- 95.4 ML
TOTAL TIME- 160 MIN NPTS- 15 ORSAT: CO2-10.00 O2- 9.80 CO- 0 N2-80.20

VMW = (0.0874)×(VC)	1) 4.522	SCF
VSTPD = ((530)×(VM)×(PB+(AH÷13.6)))÷(29.92×TM)	2) 38.362	SCFD
VT = (VMW) + (VSTPD)	3) 42.884	SCF
W = (VMW) ÷ (VT)	4) 0.105	
FDA = (1.0 - W)	5) 0.895	
ASSUMED MOISTURE FRACTION	6) 0.19	
MD = (.44×CO2) + (.32×O2) + (.28×(CO+N2))	7) 29.99	
MS = (MD×FDA) + (18×W)	8) 28.73	
MS = (MS) ÷ (28.99)	9) 0.99	
EA = (100)×(O2-0.5×CO)÷((0.266×N2)-(O2-0.5×CO))	10) 85	%
AVG(√(H×AS)) = (1÷N)×SUM(√(H×TS))	11) 11.744	
U = (174×CP×(√(29.92÷PS×GS)))×AVG(√(H×TS))	12) 1701.5	FPM
QS = (U) × (AS')	13) 85533	ACFM
QD = (QS) × (FDA)	14) 76514	CFMD
QSTPD = (QD) × (530÷TS) × (PS÷29.92)	15) 46737	SCFM
PISO = ((0.00267×VC×TS)+(PO×TS×VM÷TM)) ÷ (TIME×U×PS×AN)	16) 33.6	%

POLLUTANT CONCENTRATIONS, AT S. T. P.
MG/SCM (MG/CU MTR) = (35.31)×(MG)÷(VSTPD)
GR/SCF (S.T.P.) = (.0154)×(MG)÷(VSTPD)
POLLUTANT CONCENTRATIONS, AT STACK CONDITIONS
MG/ACM (MG/CU MTR) = ((625.3)×(MG)×(PS)×(FDA))÷((VSTPD)×(TS))
GR/ACF (STK COND) = ((0.273)×(MG)×(PS)×(FDA))÷((VSTPD)×(TS))
POLLUTANT EMISSION RATE, POUNDS/HOUR
LBS/HR = ((1.323E-4)×(MG)×(QSTPD))÷(VSTPD)

MG		GR/SCF	GR/ACF	MG/SCF	MG/ACF	LBS/HR
NOZZLE	- 12.4	0.0050	0.0027	11.41	6.23	2.00
PROBE	- 17.8	0.0071	0.0039	16.38	8.95	2.87
F FILT	- 19.9	0.0080	0.0044	18.32	10.01	3.21
B FILT	- 32.6	0.0131	0.0072	30.01	16.39	5.25
TOTALS	- 82.7	0.0332	0.0182	76.12	41.58	13.33

COMMENTS : _____

TEST CONDUCTED BY : _____

environmental science and engineering, inc.

DRY MOLECULAR WEIGHT DETERMINATION

PLANT Lou Freeport
DATE 4/30/74
SAMPLING TIME (24-hr CLOCK) —
SAMPLING LOCATION A. Lime Stack
SAMPLE TYPE (BAG, INTEGRATED, CONTINUOUS) Int. Bag
ANALYTICAL METHOD G.C. + NDIR (CO)
AMBIENT TEMPERATURE —
OPERATOR D.D.R.

COMMENTS:

RUN / GAS	1		2		3		AVERAGE NET VOLUME	MULTIPLIER	MOLECULAR WEIGHT OF STACK GAS (DRY BASIS) M_d, lb/lb-mole
	ACTUAL READING	NET	ACTUAL READING	NET	ACTUAL READING	NET			
CO_2	~~7.7~~ 10.0							44/100	4.4
O_2 (NET IS ACTUAL O_2 READING MINUS ACTUAL CO_2 READING)	11.1							32/100	3.55
CO (NET IS ACTUAL CO READING MINUS ACTUAL O_2 READING)	63 ppm							28/100	—
N_2 (NET IS 100 MINUS ACTUAL CO READING)	78.9							28/100	22.09
								TOTAL	30.04

EPA (Dur) 230
4/72

DRY MOLECULAR WEIGHT DETERMINATION

PLANT Dow Freeport
DATE 4/30/74
SAMPLING TIME (24-hr CLOCK)
SAMPLING LOCATION S. Fire Lite
SAMPLE TYPE (BAG, INTEGRATED, CONTINUOUS) INT.
ANALYTICAL METHOD G. C. SNDIK
AMBIENT TEMPERATURE
OPERATOR

COMMENTS:

RUN / GAS	1		2		3		AVERAGE NET VOLUME	MULTIPLIER	MOLECULAR WEIGHT OF STACK GAS (DRY BASIS) M_d, lb/lb-mole
	ACTUAL READING	NET	ACTUAL READING	NET	ACTUAL READING	NET			
CO_2	8.7							44/100	3.83
O_2 (NET IS ACTUAL O_2 READING MINUS ACTUAL CO_2 READING)	12.2							32/100	3.90
CO (NET IS ACTUAL CO READING MINUS ACTUAL O_2 READING)	20 ppm							28/100	
N_2 (NET IS 100 MINUS ACTUAL CO READING)	79.1							28/100	22.15
								TOTAL	29.88

EPA (Dur) 230
4/72

DRY MOLECULAR WEIGHT DETERMINATION

PLANT Dow Freeport
DATE 5/2/74
SAMPLING TIME (24-hr CLOCK)
SAMPLING LOCATION North Air Kiln
SAMPLE TYPE (BAG, INTEGRATED, CONTINUOUS) Cont.
ANALYTICAL METHOD G.C. for CO_2 & O_2 NDIR for CO
AMBIENT TEMPERATURE
OPERATOR

COMMENTS: These numbers seemed high for O_2 & CO_2 suggesting that a leak existed somewhere in our sampling system. A direct grab reading was taken from the stack without using the integrated bag sampler. Result: North CO_2 11.6 O_2 10.4
South CO_2 11.4

RUN / GAS	1		2		3		AVERAGE NET VOLUME	MULTIPLIER	MOLECULAR WEIGHT OF STACK GAS (DRY BASIS) M_d, lb/lb-mole
	ACTUAL READING	NET	ACTUAL READING	NET	ACTUAL READING	NET			
CO_2	9.7							44/100	
O_2 (NET IS ACTUAL O_2 READING MINUS ACTUAL CO_2 READING)	11.3							32/100	
CO (NET IS ACTUAL CO READING MINUS ACTUAL O_2 READING)	27 PPM							28/100	
N_2 (NET IS 100 MINUS ACTUAL CO READING)								28/100	
								TOTAL	

EPA (Dur) 230
4/72

DRY MOLECULAR WEIGHT DETERMINATION

PLANT Dow Freeport

DATE 5/2/74

SAMPLING TIME (24-hr CLOCK)

SAMPLING LOCATION South Div Stk

SAMPLE TYPE (BAG, INTEGRATED, CONTINUOUS) Integrated

ANALYTICAL METHOD Gas Chromatograph O_2, CO_2 ; NDIR CO

AMBIENT TEMPERATURE

OPERATOR

COMMENTS:

GAS \ RUN	1		2		3		AVERAGE NET VOLUME	MULTIPLIER	MOLECULAR WEIGHT OF STACK GAS (DRY BASIS) M_d, lb/lb-mole
	ACTUAL READING	NET	ACTUAL READING	NET	ACTUAL READING	NET			
CO_2	10.4%							44/100	
O_2 (NET IS ACTUAL O_2 READING MINUS ACTUAL CO_2 READING)	9.7%							32/100	
CO (NET IS ACTUAL CO READING MINUS ACTUAL O_2 READING)	34 ppm							28/100	
N_2 (NET IS 100 MINUS ACTUAL CO READING)	79.9							28/100	
								TOTAL	

EPA (Dur) 230
4/72

DRY MOLECULAR WEIGHT DETERMINATION

PLANT Dow Freeport
DATE 5/3/74
SAMPLING TIME (24-hr CLOCK) During mass run 4 hrs
SAMPLING LOCATION Nitric Kiln
SAMPLE TYPE (BAG, INTEGRATED, CONTINUOUS) INT.
ANALYTICAL METHOD G.C. for CO_2 O_2 NDIR for CO
AMBIENT TEMPERATURE —
OPERATOR GPR

COMMENTS:

RUN / GAS	1		2		3		AVERAGE NET VOLUME	MULTIPLIER	MOLECULAR WEIGHT OF STACK GAS (DRY BASIS) M_d, lb/lb-mole
	ACTUAL READING	NET	ACTUAL READING	NET	ACTUAL READING	NET			
CO_2	8.1							44/100	3.564
O_2 (NET IS ACTUAL O_2 READING MINUS ACTUAL CO_2 READING)	10.8							32/100	3.456
CO (NET IS ACTUAL CO READING MINUS ACTUAL O_2 READING)	250ppm							28/100	
N_2 (NET IS 100 MINUS ACTUAL CO READING)	81.1							28/100	22.708
								TOTAL	29.728

EPA (Dur) 230
4/72

DRY MOLECULAR WEIGHT DETERMINATION

PLANT Dow Freeport
DATE 5/3/74
SAMPLING TIME (24-hr CLOCK)
SAMPLING LOCATION South Kiln
SAMPLE TYPE (BAG, INTEGRATED, CONTINUOUS) Int.
ANALYTICAL METHOD
AMBIENT TEMPERATURE
OPERATOR JDR

COMMENTS:

RUN / GAS	1		2		3		AVERAGE NET VOLUME	MULTIPLIER	MOLECULAR WEIGHT OF STACK GAS (DRY BASIS) M_d, lb/lb-mole
	ACTUAL READING	NET	ACTUAL READING	NET	ACTUAL READING	NET			
CO_2	10.0							44/100	4.400
O_2 (NET IS ACTUAL O_2 READING MINUS ACTUAL CO_2 READING)	9.8							32/100	3.136
CO (NET IS ACTUAL CO READING MINUS ACTUAL O_2 READING)	260 PPM							28/100	0
N_2 (NET IS 100 MINUS ACTUAL CO READING)	80.2							28/100	22.456
								TOTAL	29.992

EPA (Dur) 230
4/72

PRELIMINARY CHECK FOR STACK GAS

MOISTURE CONTENT AND SPECIFIC GRAVITY

Plant Dow - Freeport Stack North Kiln Outlet

Date 4-30-74 Sample Time _____ Barometric Pressure _____ "Hg

Moisture Content -- Method 1

Final Dry Test Meter Reading 958.005 Ft^3

Initial Dry Test Meter Reading 952.734 Ft^3

Dry Test Meter Volume Sampled 5.271 Ft^3

Average Meter Temperature 90 °F

Average Meter Vacuum 0 "Hg

Average Meter Orifice ΔH (1.64) $"H_2O$

Sampling Rate ~ 3 LPM

Barometric Pressure @ Meter Orifice ? 30 "Hg

Dry Gas Volume Sampled @ 70 °F, 29.92 "Hg ~~3.453~~ 5.092 Ft^3

Condensate Volume 17 ml ml

Water Vapor Volume @ 70 °F, 29.92 "Hg 0.806 Ft^3

Moisture Fraction, H_2O ~~18.4~~ 13.7 Fraction Of Dry Air, FDA 86.3

Moisture Content -- Method 2

Dry Bulb Temp. _____ °F Wet Bulb Temp. _____ °F Dew Point Temp. _____ °F

Vapor Pressure Of H_2O @ DP _____ "Hg Stack Pressure _____ "Hg

Moisture Fraction, H_2O _____ Fraction Of Dry Air, FDA _____

Specific Gravity

Dry Molecular Weight, $M_d = [0.44(\%CO_2)] + [0.32(\%O_2)] + [0.28(\%N_2 + CO)] =$ _____

Molecular Weight @ Stack Conditions, $M_s = [(M_d)x(FDA)] + [(18)x(H_2O)] =$ _____

Specific Gravity (Referred to air), $G_s = (M_s) \div (28.99) =$ _____

PRELIMINARY VELOCITY TRAVERSE

PLANT [illegible]
DATE 4-3-77
LOCATION [illegible] KILN OUTLET South Stack
STACK I.D. 8'
BAROMETRIC PRESSURE, in. Hg
STACK GAUGE PRESSURE, in. H_2O
OPERATORS ~~GEORGE BENTON & STUCKE "RED" NEEL~~
Bill WRIGHTER & LEE ROBY

TRAVERSE POINT NUMBER	VELOCITY HEAD (Δp_s), in. H_2O	STACK TEMPERATURE (T_s), °F
1	0.15	~~3~~ 380
2	0.17	
3	0.18	
4	0.19	
5	0.21	
6	0.21	
7	0.21	
8	0.21	
9	0.22	
10	0.22	
11	0.20	
12	0.20	
13	0.19	
14	0.20	
15	0.20	
16	0.19	
17	0.18	
18	0.17	
19	0.16	
20	0.13	
21	0.10	
22	0.08	
AVERAGE		

.387
.412
.424
.436
.458
.458
.458
.458
.469
.469
.447
.447
.436
.447
.447
.436
.424
.412
.400
.381
.316
.278
22 | 9.285
.422 = $\sqrt{h}$
h = .178

SCHEMATIC OF TRAVERSE POINT LAYOUT

TRAVERSE POINT NUMBER	VELOCITY HEAD (Δp_s), in. H_2O	STACK TEMPERATURE (T_s), °F
~~400~~ 400		
~~400~~ 400		
410		
420		
425		
430		
435		
440		
445		
449		
453		
455		
450		
450		
450		
450		
445		
440		
446		
435		
AVERAGE		

EPA (Dur) 233
4/72

% H_2O = 24

PRELIMINARY VELOCITY TRAVERSE

PLANT Dow Chemical
DATE Ap 30 1974
LOCATION LIME KILN OUTLET - N. STACK
STACK I.D. 8' (96")
BAROMETRIC PRESSURE, in. Hg 30.28
STACK GAUGE PRESSURE, in. H_2O 30.28
OPERATORS Gwm & D. SWIFT

South Port

TRAVERSE POINT NUMBER	VELOCITY HEAD (Δp_s), in. H_2O	STACK TEMPERATURE (T_s), °F	$\sqrt{h}$
1	.12	350°F	.346
2	.15		.387
3	.14		.374
4	.14		.374
5	.17		.412
6	.15		.387
7	.16		.400
8	.15		.387
9	.17		.412
10	.17		.412
11	.18		.424
12	.20		.447
13	.19		.436
14	.19		.436
15	.18		.424
16	.17		.412
17	.17		.412
18	.16		.400
19	.13		.361
20			19 / 7.643
21			$\sqrt{h}$ = .40226
22			
			$\bar{h}$ = .16
	.40226		
AVERAGE $\sqrt{h}$ =			

SCHEMATIC OF TRAVERSE POINT LAYOUT

North Port

TRAVERSE POINT NUMBER	VELOCITY HEAD (Δp_s), in. H_2O	STACK TEMPERATURE (T_s), °F
1	.13	350°F
2	.15	
3	.19	
4		
5		
6		
7		
8		
9		
10		
11		
12		
13		
14		
15		
16		
17		
18		
19		
20		
21		
22		
AVERAGE		

EPA (Dur) 233
4/72

% N_2O = 14

NOMOGRAPH DATA

PLANT Dow Chemical

DATE 4/30/74

SAMPLING LOCATION South Lime Kiln

CALIBRATED PRESSURE DIFFERENTIAL ACROSS ORIFICE, in. H_2O	$\Delta H_@$	1.75
AVERAGE METER TEMPERATURE (AMBIENT + 20 °F), °F	$T_{m_{avg.}}$	100
PERCENT MOISTURE IN GAS STREAM BY VOLUME	B_{wo}	14%
BAROMETRIC PRESSURE AT METER, in. Hg	P_m	30.3
STATIC PRESSURE IN STACK, in. Hg ($P_m \pm 0.073$ x STACK GAUGE PRESSURE in in. H_2O)	P_s	30.3
RATIO OF STATIC PRESSURE TO METER PRESSURE	P_s/P_m	1.0
AVERAGE STACK TEMPERATURE, °F	$T_{s_{avg.}}$	449
AVERAGE VELOCITY HEAD, in. H_2O	$\Delta p_{avg.}$	.20
MAXIMUM VELOCITY HEAD, in. H_2O	$\Delta p_{max.}$	.23
C FACTOR	0.85	
CALCULATED NOZZLE DIAMETER, in.	3/8	
ACTUAL NOZZLE DIAMETER, in.	3/8	
REFERENCE Δp, in. H_2O	.171	

EPA (Dur) 234
4/72

2

NOMOGRAPH DATA

PLANT Dow Chemical

DATE 4/30/74

SAMPLING LOCATION Lime Kiln Outlet – North Stack

CALIBRATED PRESSURE DIFFERENTIAL ACROSS ORIFICE, in. H_2O	$\Delta H_@$	1.67
AVERAGE METER TEMPERATURE (AMBIENT + 20°F), °F	$T_{m_{avg.}}$	95
PERCENT MOISTURE IN GAS STREAM BY VOLUME	B_{wo}	14%
BAROMETRIC PRESSURE AT METER, in. Hg	P_m	30.28
STATIC PRESSURE IN STACK, in. Hg ($P_m \pm 0.073$ x STACK GAUGE PRESSURE in in. H_2O)	P_s	30.28
RATIO OF STATIC PRESSURE TO METER PRESSURE	P_s/P_m	1
AVERAGE STACK TEMPERATURE, °F	$T_{s_{avg.}}$	350°F
AVERAGE VELOCITY HEAD, in. H_2O	$\Delta p_{avg.}$	.16
MAXIMUM VELOCITY HEAD, in. H_2O	$\Delta p_{max.}$	.20
C FACTOR	.80	
CALCULATED NOZZLE DIAMETER, in.	1/4"	
ACTUAL NOZZLE DIAMETER, in.	1/4"	
REFERENCE Δp, in. H_2O	.85	

EPA (Dur) 234
4/72

PRELIMINARY VELOCITY TRAVERSE Two Run 2

PLANT Dow Chemical
DATE 5/2/74
LOCATION South Lime Kiln outlet
STACK I.D. 96"
BAROMETRIC PRESSURE, in. Hg
STACK GAUGE PRESSURE, in. H_2O
OPERATORS Wrighter & Roby

TRAVERSE POINT NUMBER	VELOCITY HEAD (Δp_s), in. H_2O	STACK TEMPERATURE (T_s), °F
1	0.07	405
2	0.09	
3	0.10	
4	0.13	
5	0.13	
6	0.13	
7	0.13	
8	0.16	
9	0.18	
10	0.18	
11	0.18	
12	0.17	
13	0.16	
14	0.16	
15	0.15	
16	0.16	
17	0.17	
18	0.16	
19	0.16	
20	0.14	
21	0.13	
22	Unable to reach	
AVERAGE		

SCHEMATIC OF TRAVERSE POINT LAYOUT

TRAVERSE POINT NUMBER	VELOCITY HEAD (Δp_s), in. H_2O	STACK TEMPERATURE (T_s), °F
AVERAGE		

EPA (Dur) 233
4/72

.419

PRELIMINARY VELOCITY TRAVERSE

PLANT Dow Chemical
DATE 5/2/74 1000 am
LOCATION South Lime Kiln Outlet
STACK I.D. 96"
BAROMETRIC PRESSURE, in. Hg 30.2
STACK GAUGE PRESSURE, in. H_2O 30.2
OPERATORS Wright & Roby

$G_s = 0.96$

$U = 174 \times 0.83 \times .419 \times \sqrt{\frac{415+460}{.96} \times \frac{29.92}{30.2}}$
$= 1818$ FPM

$Q_A = 91,400$

SCHEMATIC OF TRAVERSE POINT LAYOUT

TRAVERSE POINT NUMBER	VELOCITY HEAD (Δp_s), in. H_2O	STACK TEMPERATURE (T_s), °F	
1	~~[illegible]~~ 0.13	~~[illegible]~~ 415	.361
2	0.14		.374
3	0.14		.374
4	0.16		.400
5	0.18		.424
6	0.20		.447
7	0.21		.458
8	0.22		.469
9	0.22		.469
10	0.21		.458
11	0.21		.458
12	0.20		.447
13	0.21		.458
14	0.21		.458
15	0.21		.458
16	0.20		.447
17	0.20		.447
18	0.20		.447
19	0.21		.458
20	UNABLE		
21	TO		
22	REACH BY HAND		
AVERAGE			

TRAVERSE POINT NUMBER	VELOCITY HEAD (Δp_s), in. H_2O	STACK TEMPERATURE (T_s), °F
AVERAGE		

EPA (Dur) 233
4/72

.19

TRAVERSE POINT NUMBER	SAMPLING TIME, min / CLOCK TIME (24 hr CLOCK)	GAS METER READING (V_m), ft^3	VELOCITY HEAD (Δp_s), in. H_2O	ORIFICE PRESSURE DIFFERENTIAL (ΔH), in H_2O DESIRED	ORIFICE PRESSURE DIFFERENTIAL (ΔH), in H_2O ACTUAL	STACK TEMPERATURE (T_s), °F	DRY GAS METER TEMPERATURE INLET ($T_{m\ in}$), °F	DRY GAS METER TEMPERATURE OUTLET ($T_{m\ out}$), °F	PUMP VACUUM, in Hg	SAMPLE BOX TEMPERATURE, °F	IMPINGER TEMPERATURE, °F
	2nd	Preliminary	Traverse		—	N. Stack		2nd Run			
1	10:50		.10			370°					
2			.11								
3			.12								
4			.14								
5			.15								
6			.17								
7			.17								
8			.18								
9			.19								
10			.20								
11			.20								
12			.19								
13			.18								
14			.18								
15			.20								
16			.23								
17			.22								
18			.21								
19			.20								
20			.19								
21											
22											

EPA (Dur) 236
4 72

TRAVERSE POINT NUMBER	SAMPLING TIME, min / CLOCK TIME (24 hr CLOCK)	GAS METER READING (V_m), ft^3	VELOCITY HEAD (Δp_s), in. H_2O	ORIFICE PRESSURE DIFFERENTIAL (ΔH), in H_2O DESIRED	ORIFICE PRESSURE DIFFERENTIAL (ΔH), in H_2O ACTUAL	STACK TEMPERATURE (T_s), °F	DRY GAS METER TEMPERATURE INLET ($T_{m\,in}$), °F	DRY GAS METER TEMPERATURE OUTLET ($T_{m\,out}$), °F	PUMP VACUUM, in Hg	SAMPLE BOX TEMPERATURE, °F	IMPINGER TEMPERATURE, °F
	Preliminary Traverse			Not set		Stack	512	79	10.00	%	H_2O = 19
1	No: 1		.07			370°F					
2			.07								
3			.10								
4			.12								
5			.12								
6			.14								
7			.14								
8			.16								
9			.17								
10			.17								
11			.19								
12			.18								
13			.17								
14			.18								
15			.18								
16			.19								
17			.19								
18			.19								
19			.18								
20			.16								
21											
22											

$G_s = 0.95$

$v = 174 \times .83 \times .388 \times \sqrt{\frac{370+460}{.95} \times \frac{29.92}{30.1}} = 1650$ FPM

Q_{AS} 82,866

Ratio 1/2 flow rate = 0.907

EPA (Dur) 236
4 72

NOMOGRAPH DATA

PLANT Dow Chemical

DATE May 2, '74

SAMPLING LOCATION Lime Kiln Outlet - N. Stack

CALIBRATED PRESSURE DIFFERENTIAL ACROSS ORIFICE, in. H_2O	$\Delta H_@$	1.67
AVERAGE METER TEMPERATURE (AMBIENT + 20 °F), °F	$T_{m_{avg.}}$	95
PERCENT MOISTURE IN GAS STREAM BY VOLUME	B_{wo}	18
BAROMETRIC PRESSURE AT METER, in. Hg	P_m	
STATIC PRESSURE IN STACK, in. Hg ($P_m \pm 0.073$ x STACK GAUGE PRESSURE in in. H_2O)	P_s	
RATIO OF STATIC PRESSURE TO METER PRESSURE	P_s/P_m	1
AVERAGE STACK TEMPERATURE, °F	$T_{s_{avg.}}$	370 ~~350~~
AVERAGE VELOCITY HEAD, in. H_2O	$\Delta p_{avg.}$	.16 ~~.20~~
MAXIMUM VELOCITY HEAD, in. H_2O	$\Delta p_{max.}$	.19 ~~.22~~
C FACTOR	.74	
CALCULATED NOZZLE DIAMETER, in.	3/8	
ACTUAL NOZZLE DIAMETER, in.	3/8	
REFERENCE Δp, in. H_2O	.18	

EPA (Dur) 234
4/72

NOMOGRAPH DATA

PLANT Dow Chemical

DATE 5/2/74

SAMPLING LOCATION South Lime Kiln Outlet

CALIBRATED PRESSURE DIFFERENTIAL ACROSS ORIFICE, in. H_2O	$\Delta H_@$	1.75
AVERAGE METER TEMPERATURE (AMBIENT + 20 °F), °F	$T_{m_{avg.}}$	90
PERCENT MOISTURE IN GAS STREAM BY VOLUME	B_{wo}	19
BAROMETRIC PRESSURE AT METER, in. Hg	P_m	
STATIC PRESSURE IN STACK, in. Hg ($P_m \pm 0.073$ x STACK GAUGE PRESSURE in in. H_2O)	P_s	
RATIO OF STATIC PRESSURE TO METER PRESSURE	P_s/P_m	1
AVERAGE STACK TEMPERATURE, °F	$T_{s_{avg.}}$	405
AVERAGE VELOCITY HEAD, in. H_2O	$\Delta p_{avg.}$	.19
MAXIMUM VELOCITY HEAD, in. H_2O	$\Delta p_{max.}$	.22
C FACTOR	0.76	
CALCULATED NOZZLE DIAMETER, in.	3/8	
ACTUAL NOZZLE DIAMETER, in.	3/8	
REFERENCE Δp, in. H_2O	0.20	

EPA (Dur) 234
4/72

NOMOGRAPH DATA

PLANT Dow Chemical

DATE 5/4/74

SAMPLING LOCATION Lime Kiln Outlet – N. Stack

CALIBRATED PRESSURE DIFFERENTIAL ACROSS ORIFICE, in. H_2O	$\Delta H_@$	1.67
AVERAGE METER TEMPERATURE (AMBIENT + 20°F), °F	$T_{m_{avg.}}$	100
PERCENT MOISTURE IN GAS STREAM BY VOLUME	B_{wo}	18%
BAROMETRIC PRESSURE AT METER, in. Hg	P_m	
STATIC PRESSURE IN STACK, in. Hg ($P_m \pm 0.073$ x STACK GAUGE PRESSURE in in. H_2O)	P_s	
RATIO OF STATIC PRESSURE TO METER PRESSURE	P_s/P_m	1
AVERAGE STACK TEMPERATURE, °F	$T_{s_{avg.}}$	370
AVERAGE VELOCITY HEAD, in. H_2O	$\Delta p_{avg.}$	~.20
MAXIMUM VELOCITY HEAD, in. H_2O	$\Delta p_{max.}$	.22
C FACTOR	.76	
CALCULATED NOZZLE DIAMETER, in.	3/8	
ACTUAL NOZZLE DIAMETER, in.	3/8	
REFERENCE Δp, in. H_2O	.182	

NOMOGRAPH DATA

PLANT Dow Chemical

DATE 5/4/76

SAMPLING LOCATION South Lime Kiln Outlet

		SAME AS RUN #2
CALIBRATED PRESSURE DIFFERENTIAL ACROSS ORIFICE, in. H_2O	$\Delta H_@$	
AVERAGE METER TEMPERATURE (AMBIENT + 20 °F), °F	$T_{m_{avg.}}$	
PERCENT MOISTURE IN GAS STREAM BY VOLUME	B_{wo}	
BAROMETRIC PRESSURE AT METER, in. Hg	P_m	
STATIC PRESSURE IN STACK, in. Hg ($P_m \pm 0.073$ x STACK GAUGE PRESSURE in in. H_2O)	P_s	
RATIO OF STATIC PRESSURE TO METER PRESSURE	P_s/P_m	
AVERAGE STACK TEMPERATURE, °F	$T_{s_{avg.}}$	
AVERAGE VELOCITY HEAD, in. H_2O	$\Delta p_{avg.}$	
MAXIMUM VELOCITY HEAD, in. H_2O	$\Delta p_{max.}$	
C FACTOR		
CALCULATED NOZZLE DIAMETER, in.		
ACTUAL NOZZLE DIAMETER, in.		
REFERENCE Δp, in. H_2O		

EPA (Dur) 234
4/72

SAMPLING DATA SHEET FOR SO_2

Plant Dow Chemical Stack Lime Kiln North Outlet

Remarks

Run No.	1-A	1-B	
Date April 30 1974	← Same →		
Time of Sample	4:25-5:25	6:10 - 6:55	
Barometric Pressure, "Hg	30.38	30.38	
Stack Pressure, "Hg	30.28	30.28	
Final Dry Test Meter Reading, Ft^3	961.045	~~963.134~~ 963.704	?
Initial Dry Test Meter Reading, Ft^3	960.00	961.600	
Meter Volume Sampled @ Meter Cond., Ft^3	1.045	2.134	
Average Meter Temperature, °F	93	93	
Average Stack Temperature, °F	~~356~~ 372	~~373~~ 373	
Average Meter Vacuum, "Hg	—	—	
Average Meter Orifice ΔH, "H_2O	.01	.02	
Observed Sampling Rate, LPM .050 CFM →		.050 CFM	
Gas Volume Sampled, Ft^3, Dry, 70°F, 29.92 "Hg			

Calculations:

Meter Temp

4:25 - 90° 4:50-93° 5:15-93 6:25-93 6:50 92
4:30 - 90° 4:55-93° 5:20-95 End 1-A 6:30-93 6:55
4:35 - 90° 5:00-93 6:10-93 6:35-92 7:00
4:40 - 91° 5:05-~~275~~ 93 6:15-93 6:40-92 7:05
4:45 - 93 5:10-93 6:20-93 6:45-92 7:10
7:15

Stack Temp

4:25 - 375°
4:30 - 375°
4:35 - 372°
4:40 - 370°
4:45 - 372
4:50 - 372
4:55 - 372

5:05 - 375
5:10 - 375
5:15 - 375
~~5:20 - 375~~
5:25 - 375 End 1-A
6:10 - 375
6:15 - 375
6:20 - 375

6:35 375
6:40 375
6:45 375
6:50 375
6:55
7:00
7:05
7:10

SAMPLING DATA SHEET FOR SO2

Plant Dow Chem Stack Lime Kiln Outlet

Remarks LEAK 0.00

Run No.	2-A	2-B	
Date	5-2-74		
Time of Sample	11:50-1:15	1:45-3:24	
Barometric Pressure, "Hg			
Stack Pressure, "Hg			
Final Dry Test Meter Reading, Ft^3	968.600	973.300	
Initial Dry Test Meter Reading, Ft^3	965.300	969.500	Total
Meter Volume Sampled @ Meter Cond., Ft^3	3.300	3.800	7.100
Average Meter Temperature, °F	90	91	
Average Stack Temperature, °F	360	361	
Average Meter Vacuum, "Hg	—	—	
Average Meter Orifice ΔH, "H_2O	.01		
Observed Sampling Rate, LPM	.050 CFM	.050 CFM	
Gas Volume Sampled, Ft^3, Dry, 70°F, 29.92 "Hg			

Calculations:

Time	Temp (S)	Temp (M)	Time	Temp (S)	Temp (M)	Time	Temp (S)	Temp (M)
11:50	365	87	2:00	360	91			
11:55	365	88	2:05	360	91			
12:00	365	88	2:10	360	91			
12:05	360	88	2:15	360	92			
12:10	360	88	2:20	360	92			
12:15	360	88	2:25	360	92			
12:20	360	88	2:30	360	92			
12:25	360	90	2:35	360	92			
12:30	360	90	2:40	362	92			
12:35	360	90	2:45	362	92			
12:40	360	91	2:50	362	92			
12:45	360	91	2:55	360	92			
12:50	360	91	3:00	360	92			
12:55	360	91	3:05	360	92			
1:00	360	91	3:10	362	91			
1:05	360	91	3:15	362	90			
1:10	360	91	3:20	362	90			
1:15	360	91						
END of 2-A 20 min PURGE								
2-B → 1:45	360	91						
1:50	360	92						

APPENDIX B

FIELD DATA

TRAVERSE POINT LOCATION FOR CIRCULAR DUCTS

PLANT Dow Chemical Freeport Texas
DATE
SAMPLING LOCATION #1 & 2 Lime Kiln Apt. Outlets
INSIDE OF FAR WALL TO
OUTSIDE OF NIPPLE, (DISTANCE A)
INSIDE OF NEAR WALL TO
OUTSIDE OF NIPPLE, (DISTANCE B)
STACK I.D., (DISTANCE A - DISTANCE B) 8' (96")
NEAREST UPSTREAM DISTURBANCE ≈32' 4 stack diam
NEAREST DOWNSTREAM DISTURBANCE
CALCULATOR

Sample 44 points each for 3 minutes min.

SCHEMATIC OF SAMPLING LOCATION

TRAVERSE POINT NUMBER	FRACTION OF STACK I.D.	STACK I.D.	PRODUCT OF COLUMNS 2 AND 3 (TO NEAREST 1/8 INCH)	DISTANCE B	TRAVERSE POINT LOCATION FROM OUTSIDE OF NIPPLE (SUM OF COLUMNS 4 & 5)
1-1	.011	96"	1		
-2	.035		3 3/8		
-3	.060		5 3/4		
-4	.087		8 3/8		
-5	.116		11 1/8		
-6	.146		14		
-7	.180		17 1/4		
-8	.218		20 7/8		
-9	.261		25		
-10	.315		30 1/4		
-11	.393		37 3/4		
-12	.607		58 1/4		
-13	.685		65 3/4		
-14	.739		71		
-15	.782		75		
-16	.826		78 3/4		
-17	.854		82		
-18	.884		84 7/8		
-19	.913		87 5/8		
-20	.940		90 1/4		
-21	.965		92 5/8		
-22	.989		95		
-					

EPA (Dur) 232
4/72

FIELD DATA

PLANT Dow Chemical
DATE ~~5/7/74~~ 5/3/74
SAMPLING LOCATION South Lime Kiln
SAMPLE TYPE EPA 5 Particulate
RUN NUMBER 3
OPERATOR Wright & Roby
AMBIENT TEMPERATURE
BAROMETRIC PRESSURE 30.00
STATIC PRESSURE, (P_s) 30.00
FILTER NUMBER (s) ~~836~~ ~~.3563~~ 855 .3858

PROBE LENGTH AND TYPE 9' Glass
NOZZLE I.D. 0.306
ASSUMED MOISTURE, %
SAMPLE BOX NUMBER 1
METER BOX NUMBER 6
METER $\Delta H_@$ 1.75
C FACTOR
PROBE HEATER SETTING ~~357~~ 40%
HEATER BOX SETTING 250
REFERENCE Δp

Run 7 Filter 855 .3858

SCHEMATIC OF TRAVERSE POINT LAYOUT

READ AND RECORD ALL DATA EVERY 5 MINUTES

TRAVERSE POINT NUMBER	SAMPLING TIME, min / CLOCK TIME (24 hr CLOCK)	GAS METER READING (V_m), ft^3 508.660 ~~[illegible]~~	VELOCITY HEAD (Δp_s), in. H_2O	ORIFICE PRESSURE DIFFERENTIAL (ΔH), in. H_2O DESIRED	ACTUAL	STACK TEMPERATURE (T_s), °F	DRY GAS METER TEMPERATURE INLET ($T_{m\,in}$), °F	OUTLET ($T_{m\,out}$), °F	PUMP VACUUM, in. Hg	SAMPLE BOX TEMPERATURE, °F	IMPINGER TEMPERATURE, °F
1	9:35					410	82	82		215	—
2	9:40	511.740	.12	1.11	1.11	410	82	82	—	215	—
3	9:45	514.830	.13	1.20	1.20	410	82	82	—	215	—
4	9:50	518.424	.17	1.60	1.60	410	82	82	—	220	—
5	~~10~~ 9:55	522.125	.18	1.68	1.68	410	81	81	—	220	—
6	10:00	525.631	.17	1.60	1.60	410	81	81	—	220	—
7	10:05	529.208	.18	1.68	1.68	410	81	81	—	220	—
8	10:10	532.954	~~.18~~ .20	~~1.68~~ 1.80	~~1.68~~	410	81	81	—	220	—
9	10:15	536.754	.20	1.88	1.88	410	82	82	—	230	—
10	10:20	540.625	.21	1.94	1.94	410	83	82	2	235	—
11	10:25	544.645	.21	1.94	1.94	410	83	82	2	225	—
12	10:30	548.455	.20	1.85	1.85	410	83	82	2	225	—
13	10:35	552.001	.21	1.94	1.94	410	83	82	2	230	56
14	10:40	555.964	.21	1.94	1.94	410	83	82	2	230	56
15	10:45	559.884	.20	1.85	1.85	410	83	82	3	225	58
16	10:50	563.685	.21	1.94	1.94	410	84	82	3	240	58
17	10:55	567.545	.20	1.85	1.85	410	84	82	3	245	60
18	11:00	571.283	.20	1.85	1.85	410	84	82	3	235	65
19	11:05	574.882	.19	1.77	1.77	405	84	82	3	225	68
20	11:10	578.774	.18	1.69	1.69	405	84	82	3	230	70
21	11:15	581.939	.16	1.48	1.48	405	84	83	3	230	65
22											

COMMENTS:

EPA (Dur) 235
4 72

TRAVERSE POINT NUMBER	SAMPLING TIME, min / CLOCK TIME (24 hr CLOCK)	GAS METER READING (V_m), ft³	VELOCITY HEAD (Δp_s), in. H_2O	ORIFICE PRESSURE DIFFERENTIAL (ΔH), in H_2O DESIRED	ACTUAL	STACK TEMPERATURE (T_s), °F	DRY GAS METER TEMPERATURE INLET ($T_{m\,in}$), °F	OUTLET ($T_{m\,out}$), °F	PUMP VACUUM, in Hg	SAMPLE BOX TEMPERATURE, °F	IMPINGER TEMPERATURE, °F
	11:35	581.939									
1			.13	1.22	1.22						
2	~~11:40~~ ~~11:35~~	585.186	.13	1.22	1.22	405	85	86	—	200	70
3	11:45 ~~11:40~~	585.394	.14	1.30	1.30	405	85	86	—	220	—
4	11:50	591.547	.14	1.30	1.30	400	85	86	—	225	—
5	11:55	595.985	.17	1.59	1.59	400	85	86	—	200	—
6	12:00	598.656	.17	1.59	1.59	400	86	86	2	235	—
7	12:05	602.113	.18	1.67	1.67	400	87	86	3	235	—
8	12:10	605.943	.18	1.67	1.67	400	87	86	3	230	—
9	12:15	609.466	.18	1.67	1.67	400	87	86	3	230	—
10	12:20	613.214	.18	1.67	1.67	400	87	86	3	240	—
11	12:25	616.671	.15	1.67	1.67	400	88	87	3	240	—
12	12:30	620.924	.16	1.49	1.49	400	87	87	3	240	55
13	12:35	623.945	.17	1.59	1.59	400	87	87	3	250	55
14	12:40	628.959	.16	1.49	1.49	400	88	87	3	260	58
15	12:45	630.995	.16	1.49	1.49	400	88	87	3	265	58
16	12:50	633.620	.16	1.49	1.49	400	88	87	3	270	55
17	12:55	636.425	.17	1.59	1.59	400	87	87	3	275	56
18	13:00	640.536	.19	1.76	1.76	410	87	87	3	275	56
19	13:05	644.251	.18	1.67	1.67	410	88	87	3	275	56
20	13:00	647.566	.17	1.59	1.59	410	88	87	3	275	56
21											
22											

EPA (Dur) 236
4 72

FIELD DATA

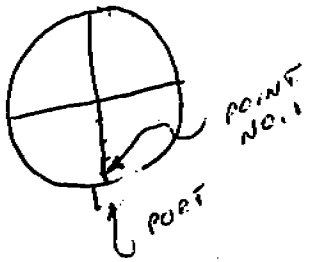

PLANT Dow Chemical
DATE 4/30/74
SAMPLING LOCATION LIME KILN OUTLET - North Stack
SAMPLE TYPE Particulate
RUN NUMBER 1
OPERATOR GWM
AMBIENT TEMPERATURE ~75°F
BAROMETRIC PRESSURE 30.28
STATIC PRESSURE, (P_s) 30.28
FILTER NUMBER (s) 826
SILICA GEL 1606

PROBE LENGTH AND TYPE 8' glass - heated
NOZZLE I.D. 1/4"
ASSUMED MOISTURE, % 14%
SAMPLE BOX NUMBER — No #, NEW Box
METER BOX NUMBER 3
METER $\Delta H_@$ 1.67
C FACTOR .80
PROBE HEATER SETTING 40%
HEATER BOX SETTING 240°F
REFERENCE Δp .85

SCHEMATIC OF TRAVERSE POINT LAYOUT

195 ml condensate

READ AND RECORD ALL DATA EVERY 3 MINUTES

TRAVERSE POINT NUMBER	SAMPLING TIME, min / CLOCK TIME (24-hr CLOCK)	GAS METER READING (V_m), ft^3	VELOCITY HEAD (Δp_s), in. H_2O	ORIFICE PRESSURE DIFFERENTIAL (ΔH), in. H_2O DESIRED	ACTUAL	STACK TEMPERATURE (T_s), °F	DRY GAS METER TEMPERATURE INLET ($T_{m\ in}$), °F	OUTLET ($T_{m\ out}$), °F	PUMP VACUUM, in. Hg	SAMPLE BOX TEMPERATURE, °F	IMPINGER TEMPERATURE, °F	
No Port		136.530										
1	16:20		.14	.32	.32	350°	89	94	0	100		
2	16:23	138.4	.14	.32	.32	350	89	94	0	100		
3	16:26	139.5	.17	.39	.39	355	89	94	0	100		
4	16:29	140.6	.18	.41	.41	375	90	95	0	100		①
5	16:33	141.6	.18	.41	.41	375	92	95	0	110		
6	16:36	142.7	.19	.43	.43	375	93	96	0	110		
7	16:39	143.8	.20	.46	.46	375	93	96	0	100		
8	16:42	—	.21	.47	.47	375	91	97	0	100		
9	16:45	146.1	.21	.47	.47	372	91	97	0	110		
10	16:48	147.3	.22	.49	.49	372	90	97	0	138		
11	16:51	148.5	.21	.47	.47	372	90	97	0	150		
12	16:54	149.5	.20	.46	.46	372	91	98	0	162		②
13	16:57	150.7	.21	.47	.47	372	91	99	0	185		
14	17:00	151.7	.20	.46	.46	372	92	99	0	202		
15	17:03	153.1	.20	.46	.46	372	93	100	0	218		
16	17:06	154.2	.21	.47	.47	372	95	100	0	220		
17	17:09	155.3	.22	.49	.49	372	96	101	0	185		
18	17:12	—	.22	.49	.49	372	96	101	0	178		
19	17:15	157.7	.20	.46	.46	375	95	101	0	200		
20	17:18	158.7	.20	.46	.46	375	93	101	0	210		
21	17:21	159.860	.19	.43	.43	375	93	101	0	210		
22							Cannot sample pt. #22. Probe too short.					

COMMENTS: Leak check @ 15" Hg vacuum = 0.00 cfm

① Shut down at end of point. Waiting on South-stack train. Restarted 1 min later.

② Checked system for leak due to reading of vacuum gauge. No leak

EPA (Dur) 235
4-72

POINT NUMBER	SAMPLING TIME, min	TIME (24 hr CLOCK)	GAS METER READING (V_m), ft^3	VELOCITY HEAD (Δp_s), in. H_2O	ORIFICE PRESSURE DIFFERENTIAL (ΔH), in H_2O DESIRED	ORIFICE PRESSURE DIFFERENTIAL (ΔH), in H_2O ACTUAL	STACK TEMPERATURE (T_s), °F	DRY GAS METER TEMPERATURE INLET ($T_{m\ in}$), °F	DRY GAS METER TEMPERATURE OUTLET ($T_{m\ out}$), °F	PUMP VACUUM, in Hg	SAMPLE BOX TEMPERATURE, °F	IMPINGER TEMPERATURE, °F
SW Port			390.482									
Pt. #1		11:40	392.8	.07	.73	.73	362	96	102	1	176	64
2		11:45	395.7	.12	1.25	1.25	362	97	101	2	182	64
3		11:50	398.7	.12	1.25	1.25	362	98	102	2	158	64
4		11:55	401.7	.13	1.32	1.32	362	99	103	2	192	64
5		12:00	404.9	.15	1.53	1.53	362	99	103	2	202	64
6		12:05	408.2	.15	1.53	1.53	365	101	104	2	204	66
7		12:10	411.6	.17	1.74	1.74	365	102	104	3	203	66
8		12:15	415.2	.17	1.74	1.74	366	103	105	3	210	68
9		12:20	418.9	.20	2.00	2.00	365	104	106	3	212	68
10		12:25	422.8	.21	2.05	2.05	365	105	106	3	208	64
11		12:30	426.5	.20	2.00	2.00	365	105	106	3	196	64
12		12:35	430.2	.19	1.90	1.90	365	107	107	3	202	64
13		12:40	434.1	.19	1.90	1.90	365	106	107	3	200	68
14		12:45	437.7	.19	1.90	1.90	365	105	108	3	208	64
15		12:50	441.2	.18	1.82	1.82	378	106	108	3	210	64
16		12:55	444.8	.17	1.74	1.74	382	105	108	3	210	64
17		13:00	448.6	.20	2.00	2.00	382	105	108	3	218	62
18		13:05	452.2	.18	1.82	1.82	382	106	108	3	220	59
19		13:10	455.9	.20	2.00	2.00	382	105	108	3	226	62
20		13:15	459.804	.19	1.90	1.90	378	105	108	3	222	64
21		13:20	End of Run									
22												

EPA (Dur) 236
4 72

FIELD DATA

PLANT Dow Chemical
DATE ~~[illegible]~~ 8/4/74
SAMPLING LOCATION Lime Kiln Outlet. — N. Stack
SAMPLE TYPE Particulate
RUN NUMBER 3
OPERATOR Gum & D. Swift
AMBIENT TEMPERATURE 78
BAROMETRIC PRESSURE 30.00
STATIC PRESSURE, (P_s) -10/13.6 + Pb 30.00
FILTER NUMBER (s) 864

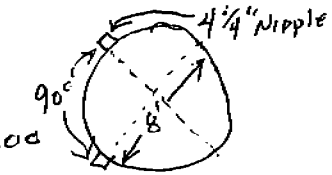

SCHEMATIC OF TRAVERSE POINT LAYOUT

PROBE LENGTH AND TYPE 8' glass Heated
NOZZLE I.D. ~~3/8~~ 0.366
ASSUMED MOISTURE, % 18%
SAMPLE BOX NUMBER NO Num
METER BOX NUMBER 3
METER $\Delta H_@$ 1.67
C FACTOR .76
PROBE HEATER SETTING 50%
HEATER BOX SETTING 250°
REFERENCE Δp .282

593 ml condensate

READ AND RECORD ALL DATA EVERY 5 MINUTES

TRAVERSE POINT NUMBER	SAMPLING TIME, min / CLOCK TIME (24 hr CLOCK)	GAS METER READING (V_m), ft^3	VELOCITY HEAD (Δp_s), in. H_2O	ORIFICE PRESSURE DIFFERENTIAL (ΔH), in. H_2O DESIRED	ACTUAL	STACK TEMPERATURE (T_s), °F	DRY GAS METER TEMPERATURE INLET ($T_{m\,in}$), °F	OUTLET ($T_{m\,out}$), °F	PUMP VACUUM, in. Hg	SAMPLE BOX TEMPERATURE, °F	IMPINGER TEMPERATURE, °F
NW PORT		319.875									
Pt. # 1	9:35	322.2	.07	.73	.73	365	89	93	5	78	74
2	9:40	324.7	.11	1.13	1.13	365	89	94	7	88	74
3	9:45	327.9	.12	1.25	1.25	365	87	94	8	128	66
4	9:50	331.1	.13	1.34	1.34	365	87	95	4	150	66 ①
5	9:55	334.3	.14	1.44	1.44	365	87	95	2	165	68
6	10:00	337.7	.17	1.73	1.73	365	87	95	2	180	68
7	10:05	341.3	.18	1.82	1.82	362	88	95	2	184	68
8	10:10	345.1	.19	1.90	1.90	362	89	95	2	190	70
9	10:15	348.8	.20	2.00	2.00	362	89	95	3	192	74
10	10:20	353.1	.20	2.00	2.00	362	89	95	3	198	76
11	10:25	356.4	.20	2.00	2.00	362	89	95	3	200	78
12	10:30	360.3	.21	2.07	2.07	362	89	95	3	206	78
13	10:35	363.9	.19	1.90	1.90	362	91	95	3	217	78
14	10:40	367.8	.19	1.90	1.90	362	91	95	3	211	78
15	10:45	371.5	.20	2.00	2.00	362	91	96	3	226	64
16	10:50	375.3	.20	2.00	2.00	362	91	96	3	231	63
17	10:55	379.2	.20	2.00	2.00	362	92	96	3	236	64
18	11:00	383.0	.21	2.07	2.07	362	93	97	3	239	64
19	11:05	386.7	.20	2.00	2.00	362	95	98	3	242	64
20	11:10	390.482	.19	1.90	1.90	362	97	98	3	248	62
21	11:15	end of port sample								Can't sample. Probe	
22										too short	

COMMENTS: Leak check = 0.01 cfm. ① Vacuum going down ~~due to loop stack~~ as box heats up more.

EPA (Dur) 235
4 72

TRAVERSE POINT NUMBER	SAMPLING TIME, min	TIME (24 hr CLOCK)	GAS METER READING (V_m), ft^3	VELOCITY HEAD (Δp_s), in. H_2O	ORIFICE PRESSURE DIFFERENTIAL (ΔH), in. H_2O DESIRED	ORIFICE PRESSURE DIFFERENTIAL (ΔH), in. H_2O ACTUAL	STACK TEMPERATURE (T_s), °F	DRY GAS METER TEMPERATURE INLET ($T_{m\,in}$), °F	DRY GAS METER TEMPERATURE OUTLET ($T_{m\,out}$), °F	PUMP VACUUM, in Hg	SAMPLE BOX TEMPERATURE, °F	IMPINGER TEMPERATURE, °F
			159.860									
SW PORT		17:55	160.7	.12	.28	.28	375	90	96	0	100	
1		17:58	161.7	.15	.34	.34	375	90	96	0	140	
2		18:01	162.8	.16	.37	.37	375	90	96	0	150	
3		18:04	163.9	.18	.41	.41	375	90	96	0	160	
4		18:07	165.0	.18	.41	.41	375	89	97	0	170	
5		18:10	166.1	.20	.46	.46	375	88	97	0	174	
6		18:13	167.3	.21	.47	.47	375	87	97	0	142	
7		18:16	168.5	.20	.46	.46	375	88	97	0	132	
8		18:19	169.6	.21	.47	.47	375	89	97	0	118	
9		18:22	170.8	.21	.47	.47	375	89	97	0	108	
10		18:25	172.0	.22	.49	.49	375	89	97	0	100	
11		18:28	173.2	.20	.46	.46	375	88	97	0	100	
12		18:31	174.3	.21	.47	.47	375	88	96	0	100	
13		18:34	175.6	.22	.49	.49	375	87	96	0	100	
14		18:37	176.7	.22	.49	.49	375	86	96	1	100	
15		18:40	177.9	.20	.46	.46	375	86	95	1	100	
16		18:43	179.0	.20	.46	.46	375	86	95	1	100	
17		18:46	180.2	.20	.46	.46	375	86	96	1	100	
18		18:49	181.259	.19	.43	.43	375	86	95	1	100	
19			END OF RUN									
20												
21												
22												

Cannot sample remaining points. Probe too short

EPA (Dur) 236
4 72

FIELD DATA

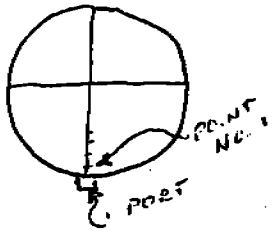

PLANT Dow Chemical
DATE 4/30/74
SAMPLING LOCATION South Lime Kiln Outlet
SAMPLE TYPE EPA 5 Particulate
RUN NUMBER 1
OPERATOR Wright & Roby
AMBIENT TEMPERATURE 80
BAROMETRIC PRESSURE ~~30.3~~ 30.28
STATIC PRESSURE, (P_s) 30.28
FILTER NUMBER (s) 843 , 3518
Silica Gel 1612

NO CYCLONE USED

PROBE LENGTH AND TYPE 9' Glass
NOZZLE I.D. 3/8
ASSUMED MOISTURE, % 14
SAMPLE BOX NUMBER 1
METER BOX NUMBER 6
METER $\Delta H_@$ 1.75
C FACTOR 0.85
PROBE HEATER SETTING 30 %
HEATER BOX SETTING 250°
REFERENCE Δp

373.342
271.828
101.514

SCHEMATIC OF TRAVERSE POINT LAYOUT

READ AND RECORD ALL DATA EVERY 3 MINUTES

Leak Check 0.008 CFM @ 25" Hg

TRAVERSE POINT NUMBER	CLOCK TIME (24-hr CLOCK) / SAMPLING TIME, min 3	GAS METER READING (V_m), ft^3	VELOCITY HEAD (Δp_s), in. H_2O	ORIFICE PRESSURE DIFFERENTIAL (ΔH), in. H_2O		STACK TEMPERATURE (T_s), °F	DRY GAS METER TEMPERATURE		PUMP VACUUM, in. Hg	SAMPLE BOX TEMPERATURE, °F	IMPINGER TEMPERATURE, °F
	3	Initial 271.828		DESIRED	ACTUAL		INLET ($T_{m\,in}$), °F	OUTLET ($T_{m\,out}$), °F			
1	1620	Impinger Back to Short For Point 1									
2	1623	—	0.14	1.50	1.50	445	89	86	12	190	— 50
3	1626	—	0.17	1.84	1.84	445	89	86	5	190	— 0
4	1629	—	0.17	1.84	1.84	445	89	86	1	190	—
5	1632	—	0.17	1.84	1.84	445	90	87	2	190	— 0
6	1635	283.5	0.23	2.41	2.41	445	92	88	2	190	— 0
7	1638	286.1	0.22	2.30	2.30	445	92	88	2.5	220	—
8	1641	289.0	0.22	2.30	2.30	450	92	88	2.5	220	—
9	1644	291.3	0.23	2.40	2.40	450	91	88	3	220	—
10	1647	293.6	0.23	2.40	2.40	450	91	88	3	220	—
11	1650	296.5	0.25	2.62	2.62	450	91	88	3	220	—
12	1653	—	0.22	2.30	2.30	450	91	88	3	220	—
13	1656	301.6	0.21	2.20	2.20	450	92	88	3	250	80
14	1659	304.1	0.20	2.12	2.12	450	92	88	3	250	75
15	1702	306.5	0.21	2.20	2.20	450	92	89	3	250	70
16	1705	309.2	0.20	2.12	2.12	450	93	89	3	250	65
17	1708	311.4	0.19	2.01	2.01	450	93	90	2.5	250	60
18	1711	313.9	0.22	2.30	2.30	450	93	89	2.5	250	60
19	1714	316.1	0.18	1.92	1.92	450	93	89	2	280	60
20	1717	318.7	0.17	1.84	1.84	450	93	90	2	280	60
21	1720	320.5	0.17	1.84	1.84	450	93	90	2	280	60
22	1723	322.9	0.14	1.50	1.50	450	91	90	2	280	60

COMMENTS:

EPA (Dur) 235
4-72

TRAVERSE POINT NUMBER	SAMPLING TIME, min	CLOCK TIME (24 hr CLOCK)	GAS METER READING (V_m), ft^3	VELOCITY HEAD (Δp_s), in. H_2O	ORIFICE PRESSURE DIFFERENTIAL (ΔH), in. H_2O DESIRED	ORIFICE PRESSURE DIFFERENTIAL (ΔH), in. H_2O ACTUAL	STACK TEMPERATURE (T_s), °F	DRY GAS METER TEMPERATURE INLET ($T_{m\,in}$), °F	DRY GAS METER TEMPERATURE OUTLET ($T_{m\,out}$), °F	PUMP VACUUM, in Hg	SAMPLE BOX TEMPERATURE, °F	IMPINGER TEMPERATURE, °F	
1	SHORT RACK												
2	1425		439.7	0.14	1.31	1.31	418	88	88	1	220	60	↓ ASSUMED LAST IMP. TEMP.
3	1430		442.5	0.10	0.93	0.93	418	88	88	1	220	60	
4	1435		445.3	0.10	0.93	0.93	418	88	88	1	220	60	
5	1440		448.7	0.15	1.40	1.40	418	89	89	2	230	60	
6	1445		451.9	0.16	1.49	1.49	418	89	89	2	230	60	
7	1450		455.5	0.16	1.49	1.49	418	89	89	2	230	60	
8	1455		459.0	0.17	1.60	1.60	418	89	89	2	235	60	
9	1500		462.6	0.17	1.60	1.60	418	90	90	2	220	60	
10	1505		466.4	0.18	1.69	1.69	418	89	89	3	230	60	
11	1510		469.8	0.18	1.69	1.69	418	89	89	3	230	60	↑
12	1515		473.5	0.14	1.31	1.31	418	89	89	3	230	60	TRUE LAST IMPINGER TEMP.
13	1520		476.8	0.18	1.69	1.69	418	89	89	3	230	60	
14	1525		480.4	0.18	1.69	1.69	418	89	89	3	235	60	
15	1530		483.9	0.18	1.69	1.69	418	89	89	4	240	64	
16	1535		487.6	0.17	1.60	1.60	418	89	89	4	240	64	
17	1540		491.1	0.17	1.60	1.60	418	89	89	4	240	62	
18	1545		494.7	0.17	1.60	1.60	418	89	89	4	240	60	
19	1550		498.3	0.18	1.69	1.69	418	89	89	4	230	60	
20	1555		501.8	0.16	1.49	1.49	418	89	89	4	230	60	
21	1600		505.0	0.15	1.40	1.40	418	89	89	4	250	60	
22	1605			0.13	1.22	1.22	418	89	89	3	250	60	

EPA (Dur) 236
4 72

FIELD DATA

PLANT Dow Chemical
DATE 5/2/74
SAMPLING LOCATION South Cross 1 Kiln Outlet
SAMPLE TYPE EPA-5
RUN NUMBER 2
OPERATOR Wightman & Baby
AMBIENT TEMPERATURE 80
BAROMETRIC PRESSURE 30.20
STATIC PRESSURE, (P_s) 30.20
FILTER NUMBER (s) 838 , 3563
Silica Gel 1610

PROBE LENGTH AND TYPE 9' Glass
NOZZLE I.D. 3/8
ASSUMED MOISTURE, % 19
SAMPLE BOX NUMBER 1
METER BOX NUMBER 6
METER $\Delta H_@$ 1.75
C FACTOR 0.76
PROBE HEATER SETTING .30
HEATER BOX SETTING 250°F
REFERENCE Δp 0.20

Final 508.199
Init 373.570
134.629

SCHEMATIC OF TRAVERSE POINT LAYOUT

COND. NET INCR. 560 ml

READ AND RECORD ALL DATA EVERY 5 MINUTES

LEAK CHECK 0.009 CFM @ 15" Hg

TRAVERSE POINT NUMBER	SAMPLING TIME, min / CLOCK TIME (24-hr CLOCK)	GAS METER READING (V_m), ft^3	VELOCITY HEAD (Δp_s), in. H_2O	ORIFICE PRESSURE DIFFERENTIAL (ΔH), in. H_2O DESIRED	ORIFICE PRESSURE DIFFERENTIAL (ΔH), in. H_2O ACTUAL	STACK TEMPERATURE (T_s), °F	DRY GAS METER TEMPERATURE INLET ($T_{m\,in}$), °F	DRY GAS METER TEMPERATURE OUTLET ($T_{m\,out}$), °F	PUMP VACUUM, in. Hg	SAMPLE BOX TEMPERATURE, °F	IMPINGER TEMPERATURE, °F
1	Unable to Reach First Point		Due to	Short	Rock	405					
2	11:47	376.2	0.08	0.75	0.75	405	89	91	1	170	-
3	11:52	379.0	0.12	1.11	1.11	405	88	89	1	180	-
4	11:57	382.1	0.13	1.22	1.22	405	88	89	1	185	-
5	1202	385.5	0.15	1.40	1.40	405	88	89	1	190	-
6	1207	388.6	0.15	1.40	1.40	405	88	89	1	195	-
7	1212	391.9	0.15	1.40	1.40	405	88	89	2	200	-
8	1217	395.4	0.17	1.60	1.60	405	88	89	2	200	-
9	1222	399.2	0.17	1.60	1.60	405	88	89	2	200	-
10	1227	402.4	0.19	1.78	1.78	405	88	89	2	200	-
11	1232	406.2	0.19	1.78	1.78	405	88	89	2.5	210	-
12	1237	409.5	0.16	1.49	1.49	405	88	89	2.5	210	-
13	1242	412.9	0.16	1.49	1.49	405	88	90	2	240	68
14	1247	416.6	0.16	1.49	1.49	405	89	90	2	245	68
15	1252	419.8	0.14	1.31	1.31	405	89	89	2	240	68
16	1257	423.0	0.10	0.93	0.93	405	89	90	2	240	68
17	1302	426.4	0.20	1.88	1.88	405	89	90	4	240	68
18	1307	429.7	0.15	1.40	1.40	405	90	90	3	240	68
19	1312	433.1	0.17	1.60	1.60	405	90	90	2.5	260	68
20	1317	436.422	0.13	1.22	1.22	405	90	90	2.5	260	60
21	[illegible]	Unable To Reach									
22	[illegible]	Unable To Reach									

COMMENTS:

EPA (Dur) 235
4/72

POINT NUMBER	SAMPLING TIME, min	(24 hr CLOCK)	GAS METER READING (V_m), ft^3	VELOCITY HEAD (Δp_s), in. H_2O	ORIFICE PRESSURE DIFFERENTIAL (ΔH), in H_2O DESIRED	ACTUAL	STACK TEMPERATURE (T_s), °F	DRY GAS METER TEMPERATURE INLET ($T_{m\,in}$), °F	OUTLET ($T_{m\,out}$), °F	PUMP VACUUM, in Hg	SAMPLE BOX TEMPERATURE, °F	IMPINGER TEMPERATURE, °F
1	1755		SHORT PACK	UNABLE	to	REACH	POINT	1				
2	1758		324.8	0.10	1.08	1.00	450	90	88	1	185	- OUT OF
3	1801		327.0	0.16	1.71	1.71	450	90	88	1	185	-
4	1804		329.2	0.17	1.82	1.82	450	92	88	2	210	-
5	1807		331.2	0.15	1.52	1.52	450	92	88	2	200	-
6	1810		333.7	0.15	1.52	1.52	450	91	88	2	200	-
7	1813		336.2	0.22	2.30	2.30	450	90	88	2	210	-
8	1816		338.8	0.22	2.30	2.30	450	89	88	2.5	220	-
9	1819		341.3	0.22	2.30	2.30	450	90	88	2.5	220	-
10	1822		343.6	0.22	2.30	2.30	450	91	88	3	220	-
11	1825		346.2	0.21	2.20	2.20	450	91	88	3	230	-
12	1828		348.9	0.22	2.30	2.30	450	91	88	3	230	-
13	1831		351.7	0.20	2.10	2.10	450	90	88	3	230	-
14	1834		354.0	0.20	2.10	2.10	450	89	88	3	230	70
15	1837		356.4	0.23	2.40	2.40	450	88	88	4	240	70
16	1840		358.9	0.20	2.10	2.10	450	88	88	4	240	70
17	1843		361.6	0.21	2.20	2.20	450	88	88	4	240	70
18	1846		364.2	0.20	2.10	2.10	450	88	88	4	240	70
19	1849		366.7	0.19	2.05	2.05	450	88	88	4	240	70
20	1852		368.4	0.19	2.05	2.05	450	88	88	3	240	70
21	1855		370.8	0.18	1.92	1.92	450	88	88	2	240	70
22	1858		373.342	0.17	1.82	1.82	450	88	88	2	240	70

EPA (Dur) 236
4 72

FIELD DATA

PLANT Dow Chemical
DATE 5/2/74
SAMPLING LOCATION Lime Kiln Outlet – N. Stack
SAMPLE TYPE Particulate
RUN NUMBER 2
OPERATOR Gwm + D. Swift
AMBIENT TEMPERATURE 80°
BAROMETRIC PRESSURE 30.20
STATIC PRESSURE, (P_s) 30.20
FILTER NUMBER (s) 837
S/G 1611

PROBE LENGTH AND TYPE 8' glass heated
NOZZLE I.D. 3/8
ASSUMED MOISTURE, % 18%
SAMPLE BOX NUMBER No Num.
METER BOX NUMBER 3
METER $\Delta H_@$ 1.67
C FACTOR .74
PROBE HEATER SETTING ~~40%~~ 50%
HEATER BOX SETTING ~~40~~ 250°
REFERENCE Δp .18

SCHEMATIC OF TRAVERSE POINT LAYOUT

READ AND RECORD ALL DATA EVERY 5 MINUTES

TRAVERSE POINT NUMBER	CLOCK TIME (24-hr CLOCK) / SAMPLING TIME, min	GAS METER READING (V_m), ft^3	VELOCITY HEAD (Δp_s), in. H_2O	ORIFICE PRESSURE DIFFERENTIAL (ΔH), in. H_2O DESIRED	ORIFICE PRESSURE DIFFERENTIAL (ΔH), in. H_2O ACTUAL	STACK TEMPERATURE (T_s), °F	DRY GAS METER TEMPERATURE INLET ($T_{m\ in}$), °F	DRY GAS METER TEMPERATURE OUTLET ($T_{m\ out}$), °F	PUMP VACUUM, in. Hg	SAMPLE BOX TEMPERATURE, °F	IMPINGER TEMPERATURE, °F
NW Port		181.679									
Point #1	11:43	184.0	.07	.73	.73	360	101	101	0	140	
2		186.6	.09	.93	.93	360	102	101	0	145	
3	11:53	189.3	.09	.93	.93	360	103	102	0	156	
4		192.2	.12	1.23	1.23	360	105	103	1	164	
5	12:03	195.4	.14	1.45	1.45	360	106	104	2	168	
6		198.7	.15	1.53	1.53	360	106	104	2	168	
7	12:13	202.2	.17	1.74	1.74		106	104	2	168	
8		205.9	.18	1.82	1.82		107	105	3	174	
9	12:23	209.4	.18	1.82	1.82		107	105	3	165	
10		213.0	.18	1.82	1.82		107	105	3	168	
11	12:33	216.9	.21	2.09	2.09		108	106	3	188	
12		220.6	.20	2.02	2.02		108	106	3	192	
13	12:43	224.2	.18	1.82	1.82		109	106	3	196	
14		227.9	.19	1.91	1.91		109	106	3	198	
15	12:53	231.5	.18	1.82	1.82		110	107	3	196	
16		235.3	.21	2.09	2.09		109	107	3	202	
17	13:03	239.2	.22	2.17	2.17		110	107	3	208	
18		243.1	.22	2.17	2.17		110	108	3	220	
19	13:13	246.8	.21	2.09	2.09		111	108	3	222	
20		250.689	.20	2.02	2.02		110	108	3	226	
21	13:23									Can't sample	
22										probe too short.	
										Pitot line ~~broken~~ melted	

COMMENTS: Leak Check = 0.01 cfm. ~~Preliminary traverse on 3rd short~~ Off.

EPA (Dur) 235
4 72

TRAVERSE POINT NUMBER	SAMPLING TIME, min / CLOCK TIME (24 hr CLOCK)	GAS METER READING (V_m), ft³	VELOCITY HEAD (Δp_s), in. H_2O	ORIFICE PRESSURE DIFFERENTIAL (ΔH), in. H_2O		STACK TEMPERATURE (T_s), °F	DRY GAS METER TEMPERATURE		PUMP VACUUM, in Hg	SAMPLE BOX TEMPERATURE, °F	IMPINGER TEMPERATURE, °F
				DESIRED	ACTUAL		INLET ($T_{m\,in}$), °F	OUTLET ($T_{m\,out}$), °F			
SW Port		250.689									
Point #1	14:25	253.2	.08	.85	.85	362	103	107	1	152	
2		255.8	.09	.93	.93		102	106	1	152	
3	14:35	258.6	.11	1.13	1.13		102	106	2	158	
4		261.6	.12	1.24	1.24		103	106	2	166	
5	14:45	265.0	.15	1.53	1.53		104	107	2	168	
6		268.4	.15	1.53	1.53		104	107	2	162	
7	14:55	271.8	.17	1.75	1.75		102	107	3	170	
8		275.4	.17	1.75	1.75		102	107	3	170	
9	15:05	279.2	.18	1.85	1.85		100	106	3	170	
10		282.7	.18	1.85	1.85		100	106	3	170	
11	15:15	286.6	.19	1.92	1.92		99	106	3	164	
12		290.2	.18	1.85	1.85		98	105	3	172	
13	15:25	294.0	.20	2.00	2.00		99	104	3	170	
14		297.7	.19	1.92	1.92		101	104	3	178	
15	15:35	301.6	.20	2.00	2.00		101	104	3	187	
16		305.3	.18	1.85	1.85		101	104	3	192	
17	15:45	309.1	.20	2.00	2.00		101	105	3	192	
18		312.7	.18	1.85	1.85		99	104	3	192	
19	15:55	316.7	.18	1.85	1.85	364	97	104	3	194	
20	16:00	319.733	.19	1.92	1.92	364	98	104	3		
21	} can't sample. Probe too short.										
22											

EPA (Dur) 236
4 72

SAMPLING DATA SHEET FOR SO_2

Plant Dow Chem Freeport, Tex. Stack Lime Kiln North

Remarks Leak Check 0.00

Run No.	3-A	3-B	
Date	5-8-74	Same	
Time of Sample	9:45 - 11:15	11:45 - 1:08	
Barometric Pressure, "Hg			
Stack Pressure, "Hg			
Final Dry Test Meter Reading, Ft^3	978.645	982.220	Total
Initial Dry Test Meter Reading, Ft^3	975.500	979.300	↓
Meter Volume Sampled @ Meter Cond., Ft^3	3.145	2.920	6.065
Average Meter Temperature, °F	87	90	
Average Stack Temperature, °F	365	375	
Average Meter Vacuum, "Hg	—	—	
Average Meter Orifice ΔH, "H_2O	.01	.01	
Observed Sampling Rate, LPM	.050 CFM	.050 CFM	
Gas Volume Sampled, Ft^3, Dry, 70°F, 29.92 "Hg			

Calculations:

Time	(S) Temp	(M) Temp	Time	Temp (S)	Temp (M)
9:45	365	87	11:45	365	89
9:50	365	87	11:50	365	89
9:55	365	87	11:55	365	89
10:00	365	87	12:00	365	90
10:05	365	87	12:05	365	90
10:10	365	87	12:10	365	90
10:15	365	87	12:15	365	90
10:20	365	87	12:20	365	90
10:25	365	87	12:25	365	90
10:30	362	87	12:30	365	91
10:35	362	87	12:35	365	91
10:40	362	87	12:40	365	91
10:45	365	87	12:45	370	91
10:50	365	87	12:50	380	92
10:55	362	87	12:55	380	92
11:00	365	87	1:00	385	92
11:05	365	87	1:05	382	92
11:10	362	87	1:10		
11:15	365	87			
End of Run 3-A					

ENVIRONMENTAL SCIENCE & ENGINEERING, INC.

SAMPLE DATA LOG

NAME: J.O.R.

PROJECT TITLE: DOW CHEMICAL FREEPORT LIME KILNS

DATE: 4/30/74

PROJECT NO: 73-011-042

SAMPLE NO.		SAMPLE DESCRIPTION
S-74-000 001	✓	N. LIME Kiln Run #1 Front half acetone rinse EPA-5
S-74-000 002	✓	N. Lime Kiln Run #1 Filter # 826 EPA-5
S-74-000 003	✓	N. Lime Kiln run #1 Back half H_2O + DI rinse EPA-5
S-74-000 004	✓	N. Lime Kiln run #1 Back half acetone rinse EPA-5
S-74-000 005	✓	N. Lime Kiln run #1 silica gel EPA-5
S-74-000 006	✓	N. lime kiln run #1 SO_2 (H_2O_2) impingers + DI rinse EPA-6
S-74-000 007	✓	S. Lime Kiln run #1 Front half acetone rinse EPA-5
S-74-000 008	✓	S. lime kiln run #1 Filter # 843 EPA-5
S-74-000 009	✓	S. lime kiln run #1 impingers H_2O Bulk half EPA-5
S-74-000 010	✓	S. lime kiln run #1 back half acetone rinse EPA-5
S-74-000 011	✓	S. lime kiln run #1 silica gel
S-74-000 012		Smelt lime kiln run #1 NOX

ENVIRONMENTAL SCIENCE & ENGINEERING, INC.

SAMPLE DATA LOG

NAME: J.O.R.

DATE: 4/30/74

PROJECT TITLE: Dow chemical Freeport lime kiln

PROJECT NO: 73-011-042

SAMPLE NO.	SAMPLE DESCRIPTION
S-74-000 013	S. lime kiln run #2 NO_x
S-74-000 014	S. lime kiln run #3 NO_x
S-74-000 015	S. lime kiln run #4 NO_x
S-74-000 016	lime kiln. run #1 distilled H_2O blank EPA-5
S-74-000 017	lime kiln run #1 acetone blank EPA-5
S-74-000 018	lime kiln run #1 H_2O_2 blank EPA-6
S-74-000 019	lime kiln run #1 NO_x blank
S-74-000 020	run #1 EPA-5 filter blank. ~~No.~~ filter no.
S-74-000 021	2:55 pm sample rock from coal belt
S-74-000 022	5:30 pm stone sample from coal belt
S-74-000 023	2:50 pm lime from kilns
S-74-000 024	5:30 lime from kilns

ENVIRONMENTAL SCIENCE & ENGINEERING, INC.

SAMPLE DATA LOG

NAME: _____ PROJECT TITLE: _____

DATE: _____ PROJECT NO: _____

SAMPLE NO.	SAMPLE DESCRIPTION
S-74-000 025	PPT. Sample
S-74-000 026	5 3 U. PPT. Sample

ENVIRONMENTAL SCIENCE & ENGINEERING, INC.

SAMPLE DATA LOG

NAME: J Rippenfuch

PROJECT TITLE: Dow Freeport

DATE: 5/2/74

PROJECT NO: 73-011-042

SAMPLE NO.	SAMPLE DESCRIPTION
S-74-000-027	Run #2 N. Lime Kiln Front half acetone wash EPA-5
-74-000-028	Run #2 N. Lime Kiln Filter # EPA-5
74-000-029	Run #2 N. Lime Kiln Back half H_2O EPA-5
74-000-030	Run #2 N. Lime Kiln Back half acetone rinse EPA-5
74-000-031	Run #2 N. Lime Kiln Silica Gel # EPA-5
74-000-032	Run #2 S. Lime Kiln Front acetone rinse EPA-5
74-000-033	Run #2 S. Lime Kiln Filter No. EPA-5
74-000-034	Run #2 S. Lime Kiln Back half H_2O EPA-5
74-000-035	Run #2 S. Lime Kiln Back acetone rinse EPA-5
74-000-036	Run #2 S. Lime Kiln Silica Gel # EPA-5
74-000-037	Run #2 N. Kiln H_2O_2 EPA-6
74-000-038	Test #2 Run #1 EPA-7 NO_x

ENVIRONMENTAL SCIENCE & ENGINEERING, INC.

SAMPLE DATA LOG

NAME: J Ruggenfel

DATE: 5/2/74

PROJECT TITLE: EPA Dow Freeport

PROJECT NO: 73-011-042

SAMPLE NO.	SAMPLE DESCRIPTION
74-000-039	Test #2 Run #2 EPA-7 NOx
74-000-040	Test #2 Run #3 EPA-7 NOx
74-000-041	Test #2 Run #4 EPA-7 NOx
74-000-042	Run #2 EPA-5 H_2O Blank
74-000-043	Run #2 EPA-5 Acetone blank
74-000-044	Run #2 EPA-5 Filter Blank #
74-000-045	Run #2 EPA-6 H_2O_2 blank
74-000-046	Run #1 On stack filter Front half acetone
74-000-047	Run #1 On stack filter glass probe acetone wash
74-000-048	Run #1 On stack filter #
74-000-049	Run #1 On stack filter EPA filter #
74-000-050	Run #1 On-stack filter Back half H_2O

ENVIRONMENTAL SCIENCE & ENGINEERING, INC.

SAMPLE DATA LOG

NAME: J Riggenbach

PROJECT TITLE: Dow Freeport

DATE: 5/2/24

PROJECT NO: 73-011-042

SAMPLE NO.	SAMPLE DESCRIPTION
74-000-051	Run #1 instack filter back half acetone
74-000-052	Run #1 instack filter silica gel #
74-000-053	Run #1 ISC EPA-5 Front half acetone
74-000-054	Run #1 ISC EPA-5 filter #
74-000-055	Run #1 ISC EPA-5 back half H_2O
74-000-056	Run #1 ISC EPA-5 back half acetone
74-000-057	Run #1 ISC EPA-5 silica gel #
74-000-089	10:30 AM Dust Sample
74-000-090	3 PM LIME KILN SAMPLE
74-000-091	10:30 AM BS01 Line from kiln
74-000-092	BS01 12:30 PM LIME Sample (ground)
74-000-093	10:30 AM Rock Sample
74-000-094	4:00 PM Rock sample
74-000-095	4:00 PM Dust

J Ruggerfield Dow Freeport 5/3/74 73-011-042

SAMPLE IDENTIFICATION LOG

EPA Number	Sample Location	Run	Contents	Comments
74-000-058	N. Lime Kiln	3	Front Acetone EPA-5	
-059			EPA-5 Filter #	
060			EPA-5 Back N_2O	
061			EPA-5 Back acetone	
062			EPA-5 Silica Gel #	
063	S. Lime Kiln		EPA-5 Front Acetone	
064			EPA-5 Filter #	
065			EPA-5 Back N_2O	
066			EPA-5 Back Acetone	
067			EPA-5 Silica gel #	
068	N. Lime Kiln		EPA-6 H_2O_2	
069	S. Lime Kiln		EPA-7 Test #3 Run #1	NO_x
070			EPA-7 Test 3 Run 2	NO_x
071			EPA-7 Test 3 Run 3	NO_x
072			EPA-7 Test 3 Run 4	NO_x
073	Lime Kiln		EPA-5 N_2O Blank	
074			EPA-5 Acetone blank	
075			EPA-5 Filter blank #	
076			EPA-6 H_2O_2 blank	
077	S. Lime Kiln	2	In stack filter front acetone	
078			In stack filter #	
79			In stack filter EPA filter no.	
80			In stack filter back H_2O	
81			In stack filter back acetone	
82			In stack filter silica gel #	
83			ISC EPA-5 front acetone	
84			ISC EPA filter #	
85			ISC EPA-5 back N_2O	
86			ISC EPA-5 back acetone	
87			ISC EPA-5 silica gel #	
88			In stack filter acetone wash of glass probe liner	
			inbetween 2 filters	
96			1:45 PM ROCK SAMPLE	
97			1:45 PM #3 KILN SAMPLE	
98			10:30 AM SCREEN CONVEYOR SAMPLE	
99			10:30 AM #3 Kiln	
100			1:45 PM #2 Kiln	

J Riggenbach	Dow Freeport	6/3/74	73-011-042

S-74-000-101	10³⁰ AM	#2 Kiln sample
-102	1450 PM	Dust Cyclone Sludge
-103	10³⁰ AM	Rock Sample
-104	2³⁰ PM	PPT Screw Conveyor

Instack filter

FIELD DATA

PLANT Dow Chemical
DATE ~~7/30/74~~ 5/2/74
SAMPLING LOCATION Precipitator outlet
SAMPLE TYPE Particulates
RUN NUMBER 1
OPERATOR L Courts
AMBIENT TEMPERATURE 85
BAROMETRIC PRESSURE ~~30.8~~ 30.2
STATIC PRESSURE, (P_s) ~~30.7~~ 30.2
FILTER NUMBER (s) Instack ~~#4 ecs~~ 74-062 ~~#863~~ 865

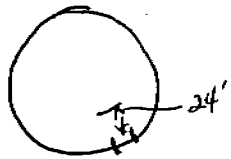

SCHEMATIC OF TRAVERSE POINT LAYOUT

PROBE LENGTH AND TYPE 5 ft Glass
NOZZLE I.D. 3/8
ASSUMED MOISTURE, % 15
SAMPLE BOX NUMBER ~~74~~
METER BOX NUMBER 74
METER $\Delta H_@$ 1.74
C FACTOR .78
PROBE HEATER SETTING 70
HEATER BOX SETTING 220
REFERENCE Δp .23

EPA's METER BOX

READ AND RECORD ALL DATA EVERY 10 MINUTES

TRAVERSE POINT NUMBER	CLOCK TIME (24-hr CLOCK) / SAMPLING TIME, min	GAS METER READING (V_m), ft^3	VELOCITY HEAD (Δp_s), in. H_2O	ORIFICE PRESSURE DIFFERENTIAL (ΔH), in. H_2O DESIRED	ORIFICE PRESSURE DIFFERENTIAL (ΔH), in. H_2O ACTUAL	STACK TEMPERATURE (T_s), °F	DRY GAS METER TEMPERATURE INLET ($T_{m\,in}$), °F	DRY GAS METER TEMPERATURE OUTLET ($T_{m\,out}$), °F	PUMP VACUUM, in. Hg	SAMPLE BOX TEMPERATURE, °F	IMPINGER TEMPERATURE, °F
	12:20	766.100	.15								
	12:30	772.9	.15	1.5	1.5	400	90	90	3	200	70
	12:40	776.9	.15	1.5	1.5	400	90	90	3	210	70
	1250	780.7	.15	1.5	1.5	400	90	90	3	210	70
	1300	784.6	.15	1.5	1.5	400	100	90	3	200	70
	1310	788.2	.15	1.5	1.5	400	108	98	3	200	70
	1320	792.3	.15	1.5	1.5	400	108	98	3	200	70
	1330	796.2	.15	1.5	1.5	400	108	98	3	200	70
	1340	800.3	.15	1.5	1.5	400	108	98	3	205	80
	1350	804.1	.15	1.5	1.5	400	108	98	3	205	80
	1400	807.8	.15	1.5	1.5	400	108	98	3	210	80
	1410	811.8	.15	1.5	1.5	400	108	98	3	205	83
	1420	815.6	.15	1.5	1.5	400	108	98	3	200	85
	1430	819.4	.15	1.5	1.5	400	108	98	3	200	80
	1440	823.6	.15	1.5	1.5	400	108	98	3	200	85
	1450	827.3	~~.135~~ .15	~~1.4~~ 1.5	~~1.4~~	400	108	98	3	200	82
	1500	830.8	.135	1.4	1.4	400	108	98	3	205	85
	1510	834.5	.135	1.4	1.4	400	108	98	3	205	89
	1520	838.101	.135	1.4	1.4	400	108	98	3	210	88
		766.100									
		72.001									

COMMENTS:

Run which compromises both Run 1 & 2

EPA (Dur) 235
4-72

FIELD DATA

PLANT Dow Chemical
DATE 4/30/74
SAMPLING LOCATION Precipitator outlet
SAMPLE TYPE Dust
RUN NUMBER 2
OPERATOR J Wurts
AMBIENT TEMPERATURE 85
BAROMETRIC PRESSURE 30.2
STATIC PRESSURE, (P_s) 30.2
FILTER NUMBER (s) 36-2

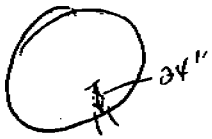

PROBE LENGTH AND TYPE 5 ft Glass
NOZZLE I.D. 3/8
ASSUMED MOISTURE, % 19
SAMPLE BOX NUMBER —
METER BOX NUMBER 5
METER $\Delta H_@$ 1.71
C FACTOR .78
PROBE HEATER SETTING 70
HEATER BOX SETTING 220
REFERENCE Δp .23

SCHEMATIC OF TRAVERSE POINT LAYOUT

READ AND RECORD ALL DATA EVERY 10 MINUTES

TRAVERSE POINT NUMBER	SAMPLING TIME, min / CLOCK TIME (24-hr CLOCK)	GAS METER READING (V_m), ft^3	VELOCITY HEAD (Δp_s), in. H_2O	ORIFICE PRESSURE DIFFERENTIAL (ΔH), in. H_2O DESIRED	ACTUAL	STACK TEMPERATURE (T_s), °F	DRY GAS METER TEMPERATURE INLET ($T_{m\,in}$), °F	OUTLET ($T_{m\,out}$), °F	PUMP VACUUM, in. Hg	SAMPLE BOX TEMPERATURE, °F	IMPINGER TEMPERATURE, °F
	1220	222.840	.15								
	12.30	229.2	.15	1.5	1.5	400	90	95	6	200	70
	12:40	235.6	.15	1.5	1.5	400	90	95	6	210	70
	1250	242.2	.15	1.5	1.5	400	90	93	6	210	70
	1200	249.7	.15	1.5	1.5	400	90	93	6	200	70
	1310	256.3	.15	1.5	1.5	400	91	94	8	200	70
	1320	263.2	.15	1.5	1.5	400	91	94	8	200	70
	1330	269.9	.15	1.5	1.5	400	92	94	8	200	70
	1940	277.1	.15	1.5	1.5	400	92	94	8	205	80
	1950	284.0	.15	1.5	1.5	400	92	94	8	205	80
	1400	291.2	.15	1.5	1.5	400	92	94	8	210	80
	1410	298.3	.15	1.5	1.5	400	92	94	8	205	83
	1420	305.5	.15	1.5	1.5	400	92	94	8	200	85
	1430	312.6	.15	1.5	1.5	400	92	94	10	200	87
	1440	319.6	.15	1.5	1.5	400	92	94	10	200	88
	1450	325.9	.135	1.4	1.4	400	92	94	10	200	84
	1500	330.3	.135	1.4	1.4	400	92	94	10	205	86
	1510	337.6	.135	1.4	1.4	400	92	94	10	208	88
	1520	343.267	.135	1.4	1.4	400	92	94	10	210	87
		222.840									
		120.427									

One point

COMMENTS:

EPA (Dur) 235
4 72

FIELD DATA

PLANT Dow Freeport
DATE 5/3/78
SAMPLING LOCATION Vice. Outlet (SO)
SAMPLE TYPE Part.
RUN NUMBER 2
OPERATOR Dwyts
AMBIENT TEMPERATURE 75
BAROMETRIC PRESSURE 30.08
STATIC PRESSURE, (P_s) 30.08
FILTER NUMBER (s) 74061
~~74063~~ 74062

24"

PROBE LENGTH AND TYPE Pyrex 5ft
NOZZLE I.D. 3/8
ASSUMED MOISTURE, % 19
SAMPLE BOX NUMBER
METER BOX NUMBER 5
METER $\Delta H_@$ 1.71
C FACTOR .78
PROBE HEATER SETTING 70
HEATER BOX SETTING 200
REFERENCE Δp .23

SCHEMATIC OF TRAVERSE POINT LAYOUT

READ AND RECORD ALL DATA EVERY 10 MINUTES

TRAVERSE POINT NUMBER	SAMPLING TIME, min / CLOCK TIME (24-hr CLOCK)	GAS METER READING (V_m), ft^3	VELOCITY HEAD (Δp_s), in. H_2O	ORIFICE PRESSURE DIFFERENTIAL (ΔH), in. H_2O DESIRED	ORIFICE PRESSURE DIFFERENTIAL (ΔH), in. H_2O ACTUAL	STACK TEMPERATURE (T_s), °F	DRY GAS METER TEMPERATURE INLET ($T_{m\,in}$), °F	DRY GAS METER TEMPERATURE OUTLET ($T_{m\,out}$), °F	PUMP VACUUM, in. Hg	SAMPLE BOX TEMPERATURE, °F	IMPINGER TEMPERATURE, °F
	1000	343.500									
	1010	350.2	~~.15~~ .17	1.8	1.8	410	81	86	12	190	~~90~~ 70
	1020	358.01	.17	1.8	1.8	410	81	86	12	200	70
	1030	364.8	.17	1.8	1.8	410	81	88	14	200	70
**	1055 ~~1040~~ 1055	371.7	.17	1.8	1.8	410	~~82~~	90	20	200	75
**	~~1105~~ 1205	378.5	.17	1.8	1.8	410	~~82~~	92	20	200	70
	1215	385.7	.16	1.7	1.7	410	85	93	16	200	75
	1225	391.7	.15	1.5	1.5	410	89	93	22	200	70
	1235	398.1	.15	1.5	1.4	410	90	93	22	200	70
	1245	403.9	.14	1.4	1.3	410	90	93	22	200	75
	1255	410.0	.16	1.6	~~1.4~~ 1.3	410	90	93	22	200	75
	1305	416.9	.15	1.5	~~1.0~~ 1.2	410	90	93	22	200	80
	1315	421.2	.15	1.5	1.0	410	90	93	22	200	80
	1325	427.1	.16	1.6	1.0	410	90	93	22	200	80
	1335	432.9	.16	1.6	.95	410	90	93	22	200	75
	1345	438.625	.15	1.5	.80	410	92	94	23	200	80
		343.500									
		95.125									

COMMENTS: ** stopping to check filters

EPA (Dur) 235
4 72

NOMOGRAPH DATA

PLANT Dow Freeport

DATE 5/3/74

SAMPLING LOCATION Bricipator Outlet

CALIBRATED PRESSURE DIFFERENTIAL ACROSS ORIFICE, in. H_2O	$\Delta H_@$	
AVERAGE METER TEMPERATURE (AMBIENT + 20 °F), °F	$T_{m_{avg.}}$	105
PERCENT MOISTURE IN GAS STREAM BY VOLUME	B_{wo}	19
BAROMETRIC PRESSURE AT METER, in. Hg	P_m	30.05
STATIC PRESSURE IN STACK, in. Hg ($P_m \pm 0.073$ x STACK GAUGE PRESSURE in in. H_2O)	P_s	30.05
RATIO OF STATIC PRESSURE TO METER PRESSURE	P_s/P_m	1.0
AVERAGE STACK TEMPERATURE, °F	$T_{s_{avg.}}$	410
AVERAGE VELOCITY HEAD, in. H_2O	$\Delta p_{avg.}$	.15
MAXIMUM VELOCITY HEAD, in. H_2O	$\Delta p_{max.}$	.16
C FACTOR	.78	
CALCULATED NOZZLE DIAMETER, in.	3/8	
ACTUAL NOZZLE DIAMETER, in.	.375	
REFERENCE Δp, in. H_2O	.21	

EPA (Dur) 234
4/72

NOMOGRAPH DATA

PLANT _____

DATE _____

SAMPLING LOCATION _____

CALIBRATED PRESSURE DIFFERENTIAL ACROSS ORIFICE, in. H_2O	$\Delta H_@$	
AVERAGE METER TEMPERATURE (AMBIENT + 20 °F), °F	$T_{m_{avg.}}$	105
PERCENT MOISTURE IN GAS STREAM BY VOLUME	B_{wo}	14
BAROMETRIC PRESSURE AT METER, in. Hg	P_m	30.3
STATIC PRESSURE IN STACK, in. Hg ($P_m \pm 0.073$ x STACK GAUGE PRESSURE in in. H_2O)	P_s	30.3
RATIO OF STATIC PRESSURE TO METER PRESSURE	P_s/P_m	1
AVERAGE STACK TEMPERATURE, °F	$T_{s_{avg.}}$	350
AVERAGE VELOCITY HEAD, in. H_2O	$\Delta p_{avg.}$	.2
MAXIMUM VELOCITY HEAD, in. H_2O	$\Delta p_{max.}$	
C FACTOR	.78	
CALCULATED NOZZLE DIAMETER, in.	5/8	
ACTUAL NOZZLE DIAMETER, in.	.375	
REFERENCE Δp, in. H_2O	.23	

EPA (Dur) 234
4/72

NOMOGRAPH DATA

PLANT _____

DATE _____

SAMPLING LOCATION _____

CALIBRATED PRESSURE DIFFERENTIAL ACROSS ORIFICE, in. H_2O	$\Delta H_@$	
AVERAGE METER TEMPERATURE (AMBIENT + 20 °F), °F	$T_{m_{avg.}}$	105
PERCENT MOISTURE IN GAS STREAM BY VOLUME	B_{wo}	14
BAROMETRIC PRESSURE AT METER, in. Hg	P_m	30.3
STATIC PRESSURE IN STACK, in. Hg ($P_m \pm 0.073$ x STACK GAUGE PRESSURE in in. H_2O)	P_s	30.3
RATIO OF STATIC PRESSURE TO METER PRESSURE	P_s/P_m	1
AVERAGE STACK TEMPERATURE, °F	$T_{s_{avg.}}$	350
AVERAGE VELOCITY HEAD, in. H_2O	$\Delta p_{avg.}$	.20
MAXIMUM VELOCITY HEAD, in. H_2O	$\Delta p_{max.}$	.25
C FACTOR	.78	
CALCULATED NOZZLE DIAMETER, in.	3/8	
ACTUAL NOZZLE DIAMETER, in.	.375	
REFERENCE Δp, in. H_2O	23	

EPA (Dur) 234
4/72