Note: This is a reference cited in *AP 42, Compilation of Air Pollutant Emission Factors, Volume I Stationary Point and Area Sources.* AP42 is located on the EPA web site at www.epa.gov/ttn/chief/ap42/

The file name refers to the reference number, the AP42 chapter and section. The file name "ref02_c01s02.pdf" would mean the reference is from AP42 chapter 1 section 2. The reference may be from a previous version of the section and no longer cited. The primary source should always be checked.

Background Report Reference

AP-42 Section Number: 11.17

Background Chapter: 4

Reference Number: 44

Title: Preliminary Test Survey: Gold Bond Building Products, Gibsonburg, OH

Monsanto Research Corp.

Monsanto Research Corp.

April 1975

Looks OK

- 320 [illegible] required

~9K

Preliminary Test Survey

Gold Bond Building Products
Gibsonburg, Ohio 43431

NOT USED

NO TEST DATA

By
T. L. Peltier
W. R. Feairheller

MONSANTO RESEARCH CORPORATION
Dayton Laboratory
Dayton, Ohio 45407

I. Introduction

The Gold Bond Building Products, Division of National Gypssum Company plant located in Gibsonburg, Ohio was visited by Mr. Thomas L. Peltier (MRC) and Mr. Thomas Lahre (EPA) on 23 April 1975. The purpose of the visit was to survey the plant prior to sampling the uncontrolled emissions from the plant with respect to the concentration of sulfur and nitrogen oxides, and the concentration and particulate size of particulate emissions. The data obtained will be employed for the determination of the emission factors of uncontrolled lime kilns and the efficiency of the multicyclone collector device.

The plant contacts were Mr. J. L. Carlson, Plant Manager and Mr. William Wheellock, Plant Engineer. The mailing address is P. O. Box E, Gibsonburg, Ohio 43431 and phone number 419-637-2121.

The presurvey Task Order indicated that the calcimatic kiln and the hydrator should be tested. Both were to be sampled for particulate emissions by Method 5 and the calcimatic kiln was also to be sampled for SO_2 (Method 6) NO_x (Method 7), particle size (Brinks) and CO (Method 10).

As a result of the plant visit, the program was revised to sample the inlet and outlet of the multicyclones on the preheater of the calcimatic kiln (Method 5 and Brinks) and for NO_x concentration at a convenient location on this system. As the plant uses natural gas, little SO_2 emission is expected. This sampling site represents the highest expected emission rate from the calcimatic system.

The plant has both Schaffer and pressure types of hydrators. Emissions from the pressure system occur over a two or three minute interval of each batch and about two batches are

processed in an hour. The Schaffer system employes a wet collector for emission control and at present no suitable site is available for testing. Testing of the hydrate systems was deleted from the program.

product or feed

II & III. Process Description and Sampling Locations

Pebble lime is produced at Gold Bond Building Products by using a 250 Ton per day calcimatic kiln and 15 shaft kilns that produce 8.5 Ton per day/kiln. The calcimatic kiln operates 24 hours/day, 7 days/week, while the shaft kilns are on a 6 days/week, 24 hour/day schedule. The calcimatic kiln is natural gas fired with #2 fuel oil used as a back-up fuel. The feed (11/16" to 2" stone) is preheated before entering the kiln. The exhaust gases pass through the preheater to a cone dust collector consisting of a group of 10 cyclones, and then to the atmosphere. The duct from the preheater to the cone collector and the exhaust stack are both four foot ID. At present, there are no ports in the inlet to the collector, but a suitable location as shown in Figure 1 is available. This location will allow at least 8 diameters from the nearest upstream disturbance and 2 diameters from the nearest downstream disturbance. The temperature at the inlet of the cone collector is between 400-500°F and there is -15" H_2O pressure. The 90' exhaust stack has ports located 20 feet (4 diameters) after the last disturbance and 25' (6.25 diameters) before the exit to the atmosphere. The gases leave the stack at 52 ft/second and at 400°F. Approximately 5 tons per day of particulate is collected by the cone collector. Results from two previous Method 5 tests on the outlet indicate an emission rate of 59 lb/hr. These tests were to determine compliance under Ohio EPA regulations and the ports used are shown in Figure 2.

The pebble lime from the kiln goes to a cooler. The gases from the cooler go to a cyclone and then to a Panghorn baghouse collector. The duct work between the cooler and cyclone and baghouse are not of sufficient length to meet minimum sampling criteria. The outlet stack of the baghouse is 30 feet tall and has a 32" diameter and could be sampled if suitable sampling ports were installed.

DUCT BETWEEN PREHEATER AND

cyclone collectors

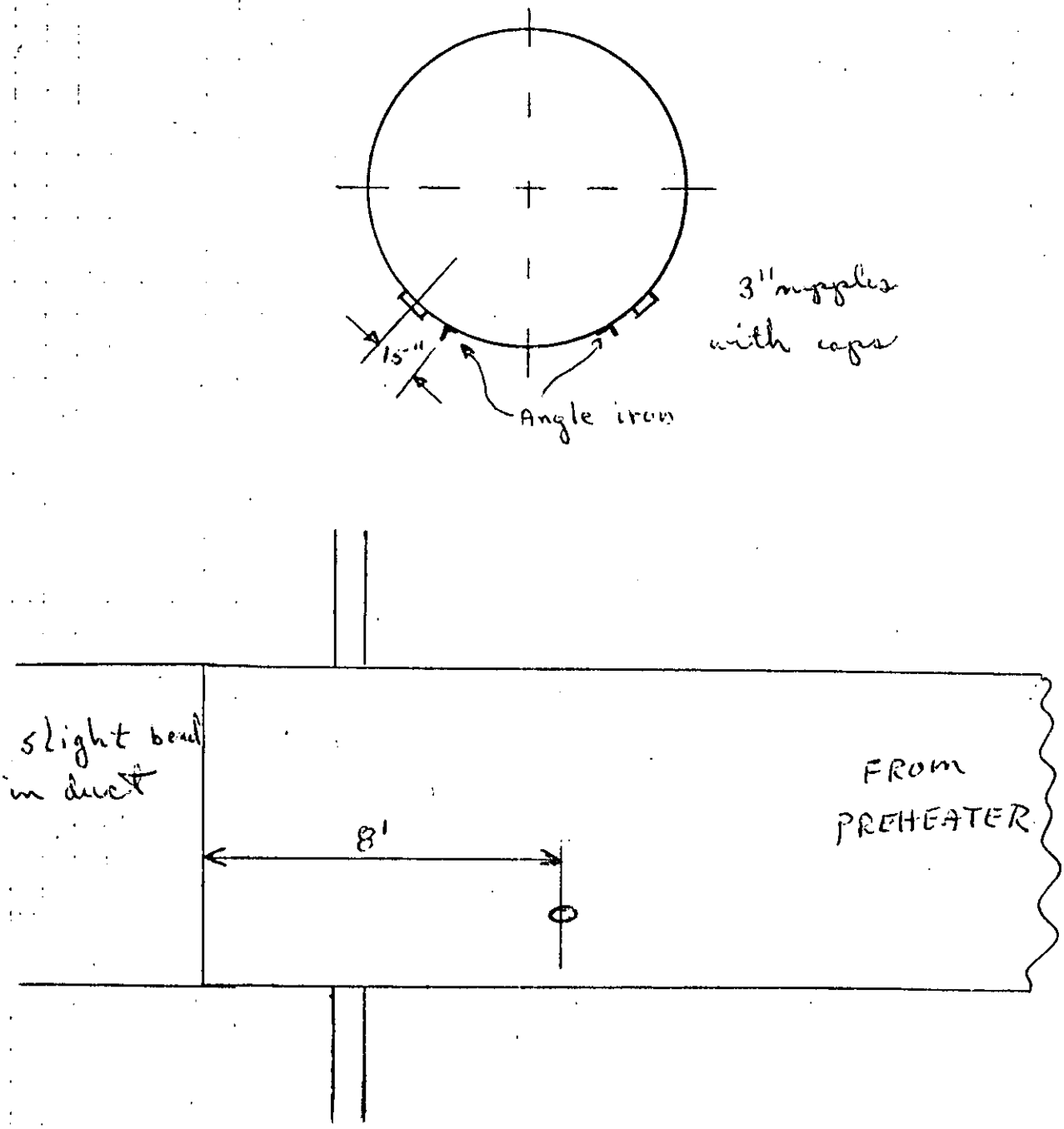

Figure 1. Inlet

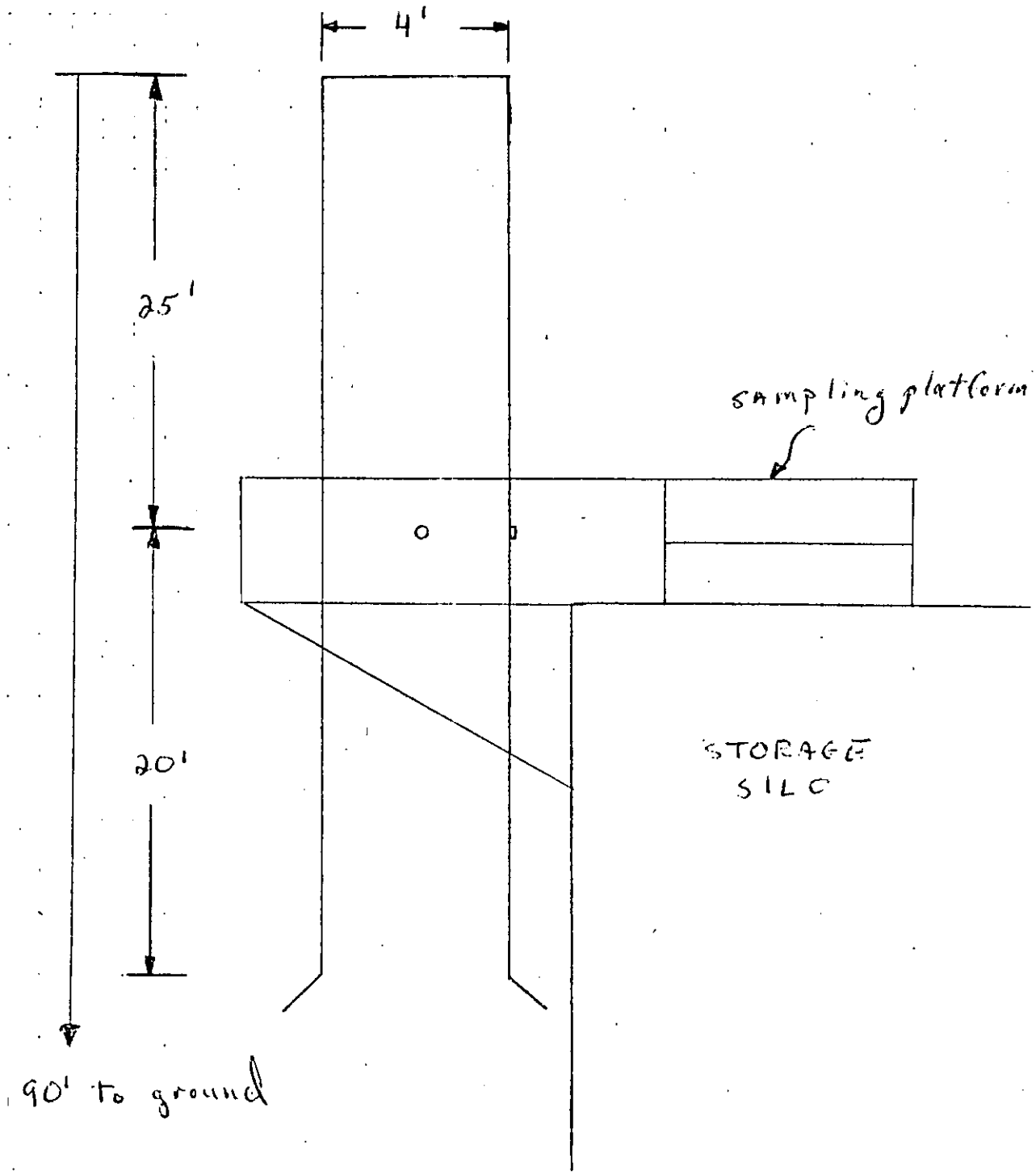

Figure 2. Outlet

The 5 foot ID shaft kilns are fired with natural gas and have a natural draft. Five inch stone is fed at the top of the kiln and the product is drawn from the bottom. As there are no controls on the device there are no ducts that can be used for sampling.

The plant has two hydrators, (1) a Schaffer and (2) a pressure type for the production of slaked lime. The Schaffer hydrator produces 15 ton/hr. The stack from this unit contains spray nozzles which direct a stream of water upwards and downwards in the stack. As a result, no sampling site is available that can meet minimum criteria.

The pressure hydrator is a batch operation which produces 5 tons per batch or about 9 tons per hour. The only emissions from the process occur when the batch load is dumped, between 2 or 3 minutes per batch. There is no flow in the exhaust stack unless the batch is being dumped. Sampling performed on this stack indicated an emission rate of 17 lb/hr. The sampling equipment used on this test was not specified.

$$\frac{17\ \text{lb/hr}}{9\ \text{ton/hr}} \approx \frac{2\ \text{lb}}{\text{ton hydrate}}$$ for pressure hydrator, after wet scrubber

hydrate

$$\approx 2.36\ \frac{\text{lb}}{\text{ton lime}}$$

IV. Safety Checklist

A. Personnel Protection Equipment (check if required)

Item	Plant	MRC	Item	Plant	MRC
Safety glasses	✓	✓	Dust masks		✓
Goggles			Vapor masks		
Side shields			Air purifying		
Face shields			Air supply		
Hard hats	✓	✓	Air packs		
Ear plugs			Chem. res't clothes		
Safety shoes	✓	✓	Heat res't clothes		
Life belt			Chem. res't gloves		
Ladder climbing device			Heat res't gloves		✓
			First aid		✓
Ground fault interrupt		✓	Fire extinguisher		✓
Grounding clamp			_____		
_____			_____		
			_____		

B. Test Site

1. Ladders

General condition Good Rest stops _____

Cage _____ Special belts _____

Comments _____

2. Scaffold-platforms - need to be installed at inlet

General condition _____ Guardrails _____

Toeboards _____ Screening _____

Comments _____

3. Smoking restrictions None

4. Vehicle traffic rules None

_____

5. Evacuation procedures _____

_____

_____

6. Alarms _____

7. Hospital location Fremont - 14 miles

Phone _____

8. Emergency numbers _____

V. Plant Entry

A. Plant Requirements Contractor to supply proof of Insurance and workman compensation coverage

B. MRC Agreement Insurance and Workman's compensation data will be supplied

C. Potential Problems None

VI. Sampling Handling

Method	Cleanup Location	Analysis Location	Shipment Where to	Shipment How	Comments*
5	At Plant	Dayton	Dayton	Truck	Weaton Bottles
7	Dayton	Dayton	Dayton	Truck	
Particle Sizing	At Plant	Dayton	Dayton	Truck	

* Comments to include need for special bottles (Weaton, etc.) and other special handling required.

VII. Level of Effort

Cost Item	Estimated Manhours*
1. Planning and Administration	10
2. Travel	40
3. Setup and Cleanup	24
4. Field Testing	120
5. Laboratory Analysis	72
6. Report Preparation	36
7/8. Subcontracting	-
9. Presurvey	-
10. Sub-total Manhours	302
11. Cost per Manhour	27.642
12. Cost of Labor (line 10 times line 11)	$8,348
13. Other Direct Costs (Itemized)	
Ports installed	Plant supplied
Scaffolding rental	$ 500
14. Total Cost (line 12 plus line 13)	$8,848

* Simultaneous sampling inlet and outlet on preheater line.

Method 5 - 3 runs at each location

3 NO_x runs at convenient location

2 particle sizing on inlet and 2 on outlet

5 men team

A - team leader & particle size

B & C - inlet

D & E - outlet

VIII. Field Test Schedule

Day \ Time	AM	PM
Sunday		
Monday	Travel 5 men to Gibsonburg	Calcimatic Kiln Traverse and moisture on inlet and outlet
Tuesday	1 Method 5 (B & C) 1 Method 5 (D & E)	1 Method 7 2 Particle Sizing Runs
Wednesday	1 Method 5 (B & C) 1 Method 5 (D & E)	2 Particle Sizing
Thursday	1 Method 5 (B & C) 1 Method 5 (D & E) 1 Method 7	Travel Home (5 men)
Friday		
Saturday		

ENVIRONMENTAL PROTECTION AGENCY PRESURVEY - APR. 23, '75

GOLD BOND BUILDING
- LIME - GIBSONBURG
J. L. CARLSON
BILL WHEELOCK - ENGINEER

Phone conversation with Wheelock on June 30:
- Production: 250 tons lime/day (fairly constant - this rate probable during '74 test)
- ~7-8 tons/day collected in multiclone, average. May vary from 5 to 10 depending on cleanliness of stone
- Material from cooler exhaust cyclone + baghouse recycled and not weighed.

line for steel + glass industry

15 shaft kilns - 5 ft I.D. - open at top -
natural draft
natural gas
- each is <10 tons/day - very small
- draw out some every 3 hours

1 calcimatic kiln - 24 hr/day, 7 day/week - ~~[illegible]~~
250 ton ~~[illegible]~~ product out/day (dolomite)
- natural gas ~~[illegible]~~ (#2 oil standby)

~ 11/16" - 2" lime

- have preheater - exhaust to multiclone cyclone + stack (good sampling location on stack)
(3" drop)
(-10 cones)

have cooler - to cyclone and baghouse and stack → very poor testing possibilities because of ductwork
(direct + indirect cooler)
→ collected material recycled to process

- can monitor process rate

- preheater outlet has been sampled by Grabaugh [illegible] - July, '74.
~ 60 lb/hr particulate at ~ 250 tons product/day
- after ~~[illegible]~~ multiclone

60 lb/hr, 24 hr/day ÷ 6 lb/ton product
250 ton/day

ENVIRONMENTAL PROTECTION AGENCY

Schafer hydrator –

- natural draft
- low flow
- few metal emission

Pressure hydrator

- only emits 3 minutes in 30 minutes during displacement of aerator
- has been tested – can get results
- also low flow – low emission
- has been sampled by Crabaugh Labs

~17 lb/hr part. at 9 tons/hr production

after wet collector

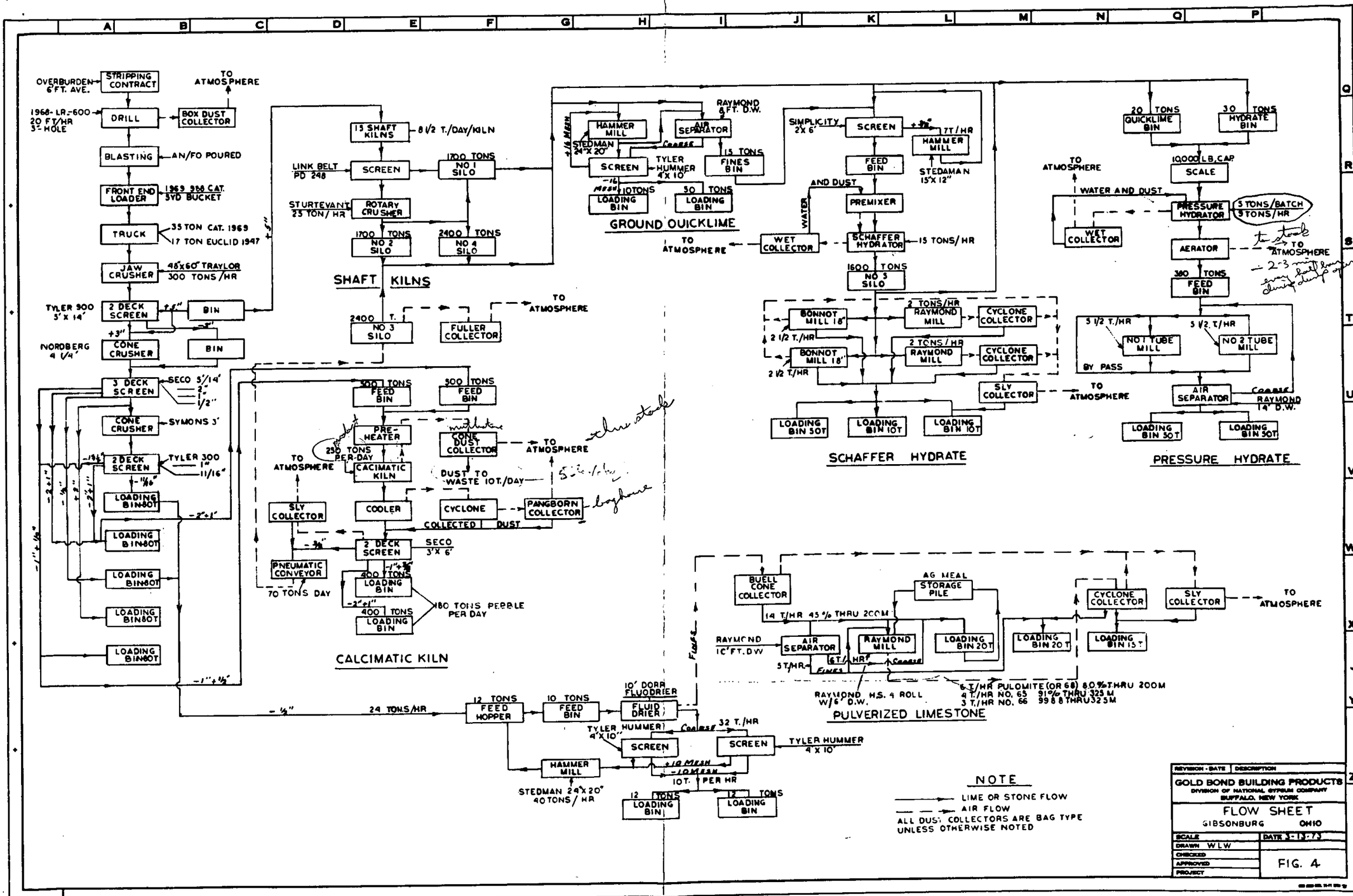
OVERBURDEN 6' FT. AVE.
STRIPPING CONTRACT
TO ATMOSPHERE
1968 - LR-600 20 FT/HR 3" HOLE
DRILL
BOX DUST COLLECTOR
BLASTING
AN/FO POURED
FRONT END LOADER
1969 988 CAT. 5YD BUCKET
TRUCK
35 TON CAT. 1969
17 TON EUCLID 1947
JAW CRUSHER
48"x60" TRAYLOR 300 TONS/HR
TYLER 900 5' x 14'
2 DECK SCREEN
BIN
NORDBERG 4 1/4'
CONE CRUSHER
BIN
3 DECK SCREEN
SECO 5'/14' 2" 1/2"
CONE CRUSHER
SYMONS 3'
2 DECK SCREEN
TYLER 300 1" 11/16"
LOADING BIN 80T
LOADING BIN 80T
LOADING BIN 80T
LOADING BIN 80T
LOADING BIN 80T
LOADING BIN 80T
15 SHAFT KILNS
8 1/2 T./DAY/KILN
LINK BELT PD 248
SCREEN
1700 TONS NO 1 SILO
STURTEVANT 25 TON/HR
ROTARY CRUSHER
1700 TONS NO 2 SILO
2400 TONS NO 4 SILO
SHAFT KILNS
2400 T. NO 3 SILO
FULLER COLLECTOR
TO ATMOSPHERE
500 TONS FEED BIN
500 TONS FEED BIN
PRE-HEATER
CONE DUST COLLECTOR
TO ATMOSPHERE
250 TONS PER DAY
CACIMATIC KILN
TO ATMOSPHERE
DUST TO WASTE 10T./DAY
SLY COLLECTOR
COOLER
CYCLONE
PANGBORN COLLECTOR
COLLECTED DUST
2 DECK SCREEN
SECO 3'X 6'
PNEUMATIC CONVEYOR
70 TONS DAY
400 TONS LOADING BIN
400 TONS LOADING BIN
180 TONS PEBBLE PER DAY
CALCIMATIC KILN
HAMMER MILL
STEDMAN 24"X 20"
AIR SEPARATOR
RAYMOND 6 FT. D.W.
SCREEN
TYLER HUMMER 4'X 10'
15 TONS FINES BIN
10 TONS LOADING BIN
50 TONS LOADING BIN
GROUND QUICKLIME
SIMPLICITY 2'X 6'
SCREEN
7T/HR HAMMER MILL
STEDAMAN 15"X 12"
FEED BIN
PREMIXER
WATER AND DUST
WET COLLECTOR
TO ATMOSPHERE
SCHAFFER HYDRATOR
15 TONS/HR
1600 TONS NO 3 SILO
BONNOT MILL 18"
2 1/2 T./HR
2 TONS/HR RAYMOND MILL
CYCLONE COLLECTOR
2 TONS/HR RAYMOND MILL
CYCLONE COLLECTOR
SLY COLLECTOR
TO ATMOSPHERE
LOADING BIN 50T
LOADING BIN 10T
LOADING BIN 10T
SCHAFFER HYDRATE
20 TONS QUICKLIME BIN
30 TONS HYDRATE BIN
10,000 LB. CAP. SCALE
TO ATMOSPHERE
WATER AND DUST
PRESSURE HYDRATOR
3 TONS/BATCH 3 TONS/HR
WET COLLECTOR
AERATOR
TO ATMOSPHERE
380 TONS FEED BIN
5 1/2 T./HR
5 1/2 T./HR
NO 1 TUBE MILL
NO 2 TUBE MILL
BY PASS
AIR SEPARATOR
RAYMOND 14" D.W.
LOADING BIN 50T
LOADING BIN 50T
PRESSURE HYDRATE
BUELL CONE COLLECTOR
AG MEAL STORAGE PILE
14 T/HR 45% THRU 200M
CYCLONE COLLECTOR
SLY COLLECTOR
TO ATMOSPHERE
RAYMOND 10' FT. D.W.
AIR SEPARATOR
RAYMOND MILL
LOADING BIN 20T
LOADING BIN 20T
LOADING BIN 15T
5 T/HR
6 T/HR
FINES
RAYMOND H.S. 4 ROLL W/6' D.W.
6 T/HR PULOMITE (OR 68) 80% THRU 200M
4 T/HR NO. 65 91% THRU 325 M
3 T/HR NO. 66 99.8% THRU 325 M
PULVERIZED LIMESTONE
- 1/2"
24 TONS/HR
12 TONS FEED HOPPER
10 TONS FEED BIN
10' DORR FLUODRIER
FLUID DRIER
TYLER HUMMER 4'X 10"
SCREEN
32 T./HR
SCREEN
TYLER HUMMER 4'X 10"
HAMMER MILL
STEDMAN 24"X 20" 40 TONS/HR
10T. PER HR
12 TONS LOADING BIN
12 TONS LOADING BIN
NOTE
LIME OR STONE FLOW
AIR FLOW
ALL DUST COLLECTORS ARE BAG TYPE UNLESS OTHERWISE NOTED
REVISION - DATE
DESCRIPTION
GOLD BOND BUILDING PRODUCTS
DIVISION OF NATIONAL GYPSUM COMPANY
BUFFALO, NEW YORK
FLOW SHEET
GIBSONBURG OHIO
SCALE
DATE 3-13-73
DRAWN WLW
CHECKED
APPROVED
PROJECT
FIG. 4

CROBAUGH LABORATORIES

RESEARCH • ANALYSIS • TESTING

3800 PERKINS AVENU CLEVELAND, OHIO 44114

2 6 · 881-7320

Gold Bond Building Products
Division of National Gypsum Company
North Main Street
Gibsonburg, Ohio 43431

Attention: Mr. W. L. Wheelock

Reporting Date	July 11, 1974
Lab. No.	LHS 6694
Date Received	June 27, 1974
Material	Stack Sampling
Marked	Please see below
P. O.	53812-L

On March 28, 1974 and June 27, 1974, our representatives reported to Gold Bond Building Products, Gibsonburg, Ohio, for the purpose of sampling the effluent from:

1) Calcimatic Kiln

2) Pressure Hydrate Stack

The sampling was performed in the presence of Mr. Cherry of the Ohio Environmental Protection Agency.

Sampling was done in accordance with Method 5 of the EPA Methods of Collecting Particulate Emissions from Stationary Sources, as published in the Federal Register.

The sampling equipment, all measurements, all tests performed prior to and during the sampling, and all calculations are in accordance with EPA Methods.

Details of our sampling are as follows:

Calcimatic Kiln

The stack diameter is four feet in diameter. Two samples were taken, each sample consisted of a 32 point traverse (16 points each at 90°). The sampling ports were located approximately 20 feet above the fan. A five minute sample was drawn at each traverse point.

Pressure Hydrate Stack

This stack is three feet in diameter. Two samples were taken, each sample consisted of a 32 point traverse (16 points each at 90°). The sampling times for Run #1 was 5 minutes per point and Run #2 was 3 minutes per point. Due to the low velocity pressure in the stack a non-routine sampling procedure was used. The velocity was measured with a probe type anemometer at each traverse point. Calculations were made to obtain a p for each point which were used with the Nomograph to obtain H for sampling.

Member American Council of Independent Laboratories

While information and data in this report is reliable to the best of our knowledge and belief, results are not guaranteed and no responsibility is assumed. No part of this report is to be used for advertising purposes or general distribution without our consent.

CROBAUGH LABORATORIES

RESEARCH • ANALYSIS • TESTING

3800 PERKINS AVENUE CLEVELAND, OHIO 44114

216 881-7320

Gold Bond Building Products
Division of National Gypsum Company
North Main Street
Gibsonburg, Ohio 43431

Attention: Mr. W. L. Wheelock

Reporting Date	July 11, 1974
Lab. No.	146.6694
Date Received	June 27, 1974
Material	Stack Sampling
Marked	Please see below
P. O	653812-1

Attached to this report and made a part of this report are:

1. Summary of Test Data
2. Gas Analysis, Orsat
3. Moisture Determination Data
4. Stack Temperature Velocity Head and Meter Readings
5. Calculations used in obtaining Particulate Loading

Based on the data obtained, we found the particulate emissions to be:

Calcimatic Kiln

Run #1	59.38 pounds per hour	59 lb/hr
Run 2	61.63 pounds per hour	

Pressure Hydrate Stack

9th Run 1	16.67 pounds per hour	17 lb/hr
Run 2	17.48 pounds per hour	

Respectfully submitted,

CROBAUGH LABORATORIES

Michael R. Gayine

jj

Member American Council of Independent Laboratories

While information and data in this report is reliable to the best of our knowledge and belief, results are not guaranteed and no responsibility is assumed. No part of this report is to be used for advertising purposes or general distribution without our consent in writing.

NOMENCLATURE

I - Percent of Isokinetic Sampling.

V_{lc} - Total volume of liquid collected in impinger and silica gel, ml.

V_m - Volume of gas sample through the dry gas meter (meter conditions) cu. ft.

T_m - Absolute average dry gas meter temperature °R

P_{bar} - Barometric pressure at sampling site, inches Hg.

ΔH_{avg} - Average pressure drop across the orifice, inches H_2O.

Θ - Total sampling time, minutes.

V_s - Stack gas velocity, ft./sec.

P_s - Absolute stack gas pressure, inches Hg.

A_n - Cross-sectional area of nozzle, sq. ft.

M_d - Dry molecular weight, lb./lb-mole.

M_s - Molecular weight of stack gas (wet basis), lb./lb-mole.

B_{wo} - Proportion by volume of water vapor in gas stream.

C_p - Pitot tube coefficient, dimensionless.

$(\sqrt{\Delta P})_{avg}$ - Average velocity head of stack gas, inches H_2O.

$(T_s)_{avg}$ - Average absolute stack gas temperature, °R.

$V_{m_{std}}$ - Volume of gas sample through the dry gas meter (standard conditions) cu. ft.

$V_{w_{std}}$ - Volume of water vapor in the gas sample (standard conditions) cu. ft.

C_s' - Concentration of particulate matter in stack gas, gr./s.c.f., dry basis.

M_n - Total amount of particulate matter collected, milligrams.

C_s - Concentration of particulate matter in stack gas, lb./s.c.f., dry basis.

Q_s - Volumetric flow rate, dry basis, standard conditions, $ft.^3$/hour.

A - Cross-sectional area of stack, $ft.^2$.

T_{std} - Absolute temperature at standard conditions, 530°R.

P_{std} - Absolute pressure at standard conditions, 29.92 inches Hg.

L - Particulate matter load in stack gas, lbs./hour, dry basis.

CROBAUGH LABORATORIES

Lab. No. [illegible]

SUMMARY OF TEST DATA

1. Plant Gold Bond Building Prod.
2. Location Calcimatic Kiln
3. Operator Michael R. Gaydos
4. Date 3/28/74
5. Sampling Station Run #1 Run #2
6. Material Collected Part
7. Operating Condition Normal
8. Av. stack gas velocity, ft./sec. 52.67 53.83
9. Av. stack gas temp., °F 392 402
10. Area of stack, sq. ft. 12.57 12.57
11. Stack gas flow rate, scf/hour 1,248,752 = 21000 SCF/min = 1,246,432
12. Sampling nozzle diam., in. 1/4 1/4
13. Meter sampling rate, cfm av. 0.6 0.6
14. Testing time, min. 160 160
15. Av. meter vacuum, in Hg
16. Av. meter temp., °F 82 86
17. Sample gas vol. - meter cond., cf 95.5 99.5
    standard cond., scf 93.6 96.9
18. Water Vapor: Condensate, ml. 297 335
    Volume, cf, standard cond. 14.08 15.88
19. Moisture Content (proportion by volume) 0.16 0.17
20. Total sample gas volume, cf
21. Total sample gas volume, scf 93.6 96.9
22. Weight collected, grams A. Solvent Sol. .6682 .8549
    B. Filter 1.3462 1.2832
    Total Weight, grams 1.9844 2.1381
23. Concentration, grains/scf 0.33 0.34
24. Concentration, lbs./scf x 1 46.75 48.65
25. Particulate flow rate, lbs./hr. 58.38 60.63
26. Percent of Isokinetic sampling 100 104

CROBAUGH LABORATORIES

Lab. No. [illegible]

SUMMARY OF TEST DATA

1. Plant: Gold Bond Building Products
2. Location: Pressure Hydrator Stack
3. Operator: [illegible]
4. Date: 6/27/74
5. Sampling Station: Run 1 | Run 2
6. Material Collected: Part
7. Operating Condition: Normal

		Run 1	Run 2
8.	Av. stack gas velocity, ft./sec.	3.77	3.80
9.	Av. stack gas temp., °F	137	139
10.	Area of stack, sq. ft.	7.07	7.07
11.	Stack gas flow rate, scf/hour	69,185 ≈ 1100 SCF/min	67,786
12.	Sampling nozzle diam., in	3/4	3/4
13.	Meter sampling rate, cfm av.	0.6	0.6
14.	Testing time, min.	160	96
15.	Av. meter vacuum, in Hg		
16.	Av. meter temp., °F	106	115
17.	Sample gas vol. - meter cond., cf	95.1	58.2
	standard cond., scf	87.38	53.86
18.	Water Vapor: Condensate, ml.	362	260
	Volume, cf, standard cond.	17.16	12.32
19.	Moisture content (proportion by volume)	0.19	0.21
20.	Total sample gas volume, cf		
21.	Total sample gas volume, scf	89.38	53.86
22.	Weight collected, grams A. Solvent Sol.	8.1837	5.4543
	B. Filter	1.5855	.8444
	Total weight, grams	9.7692	6.2987
23.	Concentration, grains/scf	1.68	1.80
24.	Concentration, lbs./scf	241.00	257.87
25.	Particulate flow rate, lbs./hr.	16.67	17.48
26.	Percent of Isokinetic sampling	107%	110%

9 Tons/hr product.

Preliminary Test Survey

Gold Bond Building Products
Gibsonburg, Ohio 43431

By
T. L. Peltier
W. R. Feairheller

MONSANTO RESEARCH CORPORATION
Dayton Laboratory
Dayton, Ohio 45407

I. Introduction

The Gold Bond Building Products, Division of National Gypssum Company plant located in Gibsonburg, Ohio was visited by Mr. Thomas L. Peltier (MRC) and Mr. Thomas Lahre (EPA) on 23 April 1975. The purpose of the visit was to survey the plant prior to sampling the uncontrolled emissions from the plant with respect to the concentration of sulfur and nitrogen oxides, and the concentration and particulate size of particulate emissions. The data obtained will be employed for the determination of the emission factors of uncontrolled lime kilns and the efficiency of the multicyclone collector device.

The plant contacts were Mr. J. L. Carlson, Plant Manager and Mr. William Wheellock, Plant Engineer. The mailing address is P. O. Box E, Gibsonburg, Ohio 43431 and phone number 419-637-2121.

The presurvey Task Order indicated that the calcimatic kiln and the hydrator should be tested. Both were to be sampled for particulate emissions by Method 5 and the calcimatic kiln was also to be sampled for SO_2 (Method 6) NO_x (Method 7), particle size (Brinks) and CO (Method 10).

As a result of the plant visit, the program was revised to sample the inlet and outlet of the multicyclones on the preheater of the calcimatic kiln (Method 5 and Brinks) and for NO_x concentration at a convenient location on this system. As the plant uses natural gas, little SO_2 emission is expected. This sampling site represents the highest expected emission rate from the calcimatic system.

The plant has both Schaffer and pressure types of hydrators. Emissions from the pressure system occur over a two or three minute interval of each batch and about two batches are

processed in an hour. The Schaffer system employes a wet collector for emission control and at present no suitable site is available for testing. Testing of the hydrate systems was deleted from the program.

II & III. Process Description and Sampling Locations

Pebble lime is produced at Gold Bond Building Products by using a 250 Ton per day calcimatic kiln and 15 shaft kilns that produce 8.5 Ton per day/kiln. The calcimatic kiln operates 24 hours/day, 7 days/week, while the shaft kilns are on a 6 days/week, 24 hour/day schedule. The calcimatic kiln is natural gas fired with #2 fuel oil used as a back-up fuel. The feed (11/16" to 2" stone) is preheated before entering the kiln. The exhaust gases pass through the preheater to a cone dust collector consisting of a group of 10 cyclones, and then to the atmosphere. The duct from the preheater to the cone collector and the exhaust stack are both four foot ID. At present, there are no ports in the inlet to the collector, but a suitable location as shown in Figure 1 is available. This location will allow at least 8 diameters from the nearest upstream disturbance and 2 diameters from the nearest downstream disturbance. The temperature at the inlet of the cone collector is between 400-500°F and there is -15" H_2O pressure. The 90' exhaust stack has ports located 20 feet (4 diameters) after the last disturbance and 25' (6.25 diameters) before the exit to the atmosphere. The gases leave the stack at 52 ft/second and at 400°F. Approximately 5 tons per day of particulate is collected by the cone collector. Results from two previous Method 5 tests on the outlet indicate an emission rate of 59 lb/hr. These tests were to determine compliance under Ohio EPA regulations and the ports used are shown in Figure 2.

The pebble lime from the kiln goes to a cooler. The gases from the cooler go to a cyclone and then to a Panghorn baghouse collector. The duct work between the cooler and cyclone and baghouse are not of sufficient length to meet minimum sampling criteria. The outlet stack of the baghouse is 30 feet tall and has a 32" diameter and could be sampled if suitable sampling ports were installed.

DUCT BETWEEN PREHEATER AND

cyclone collectors

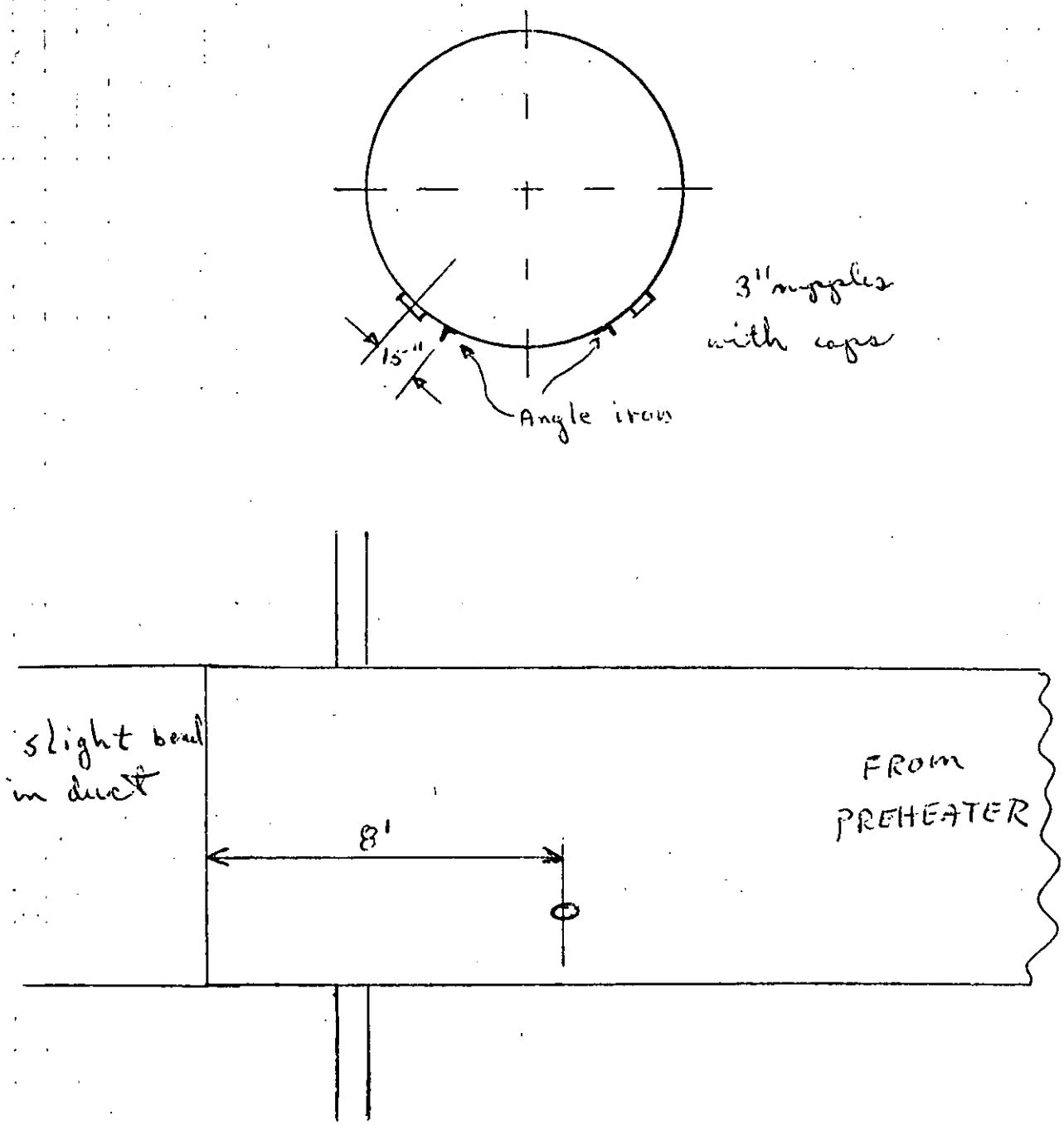

Figure 1. Inlet

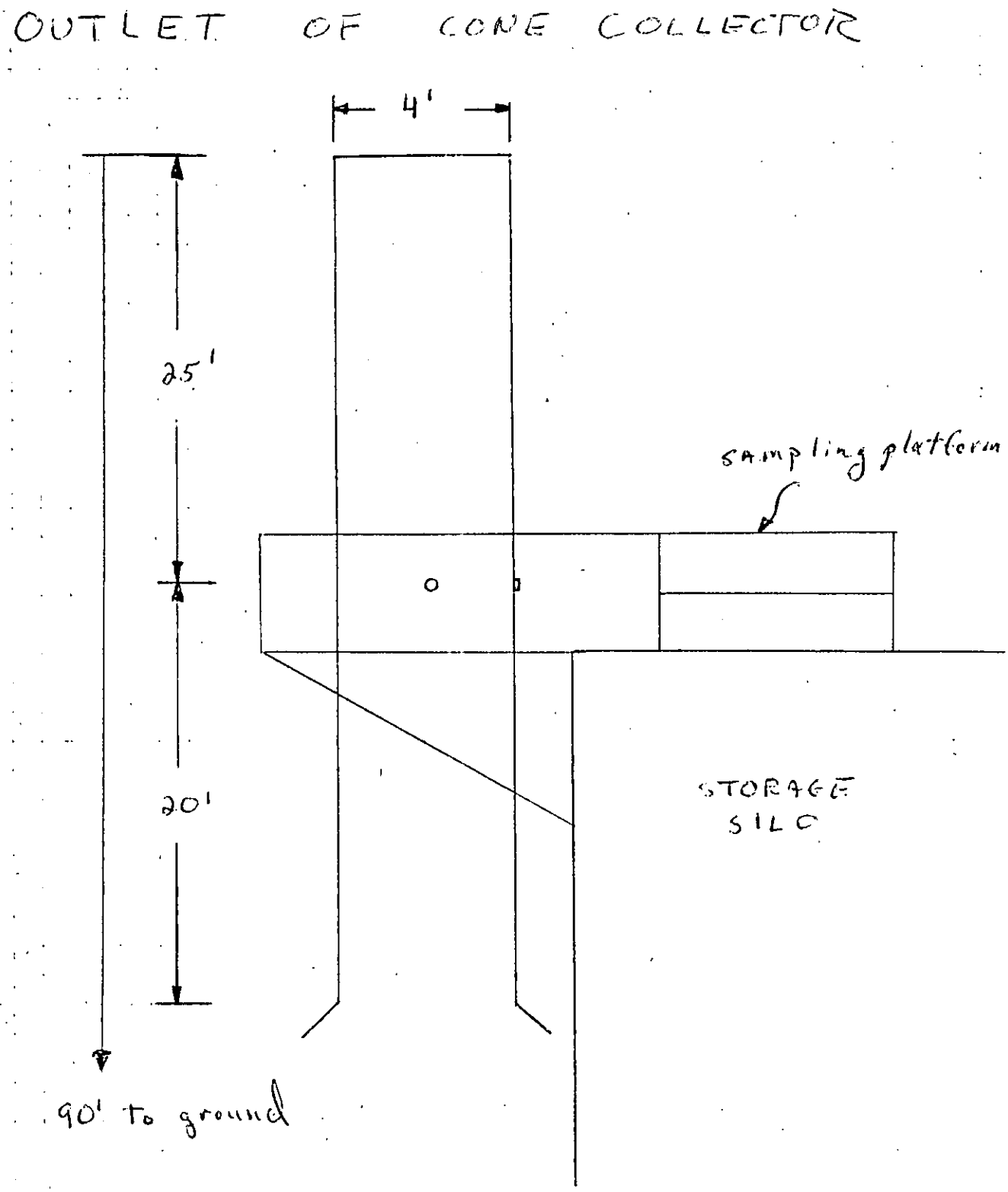

Figure 2. Outlet

The 5 foot ID shaft kilns are fired with natural gas and have a natural draft. Five inch stone is fed at the top of the kiln and the product is drawn from the bottom. As there are no controls on the device there are no ducts that can be used for sampling.

The plant has two hydrators, (1) a Schaffer and (2) a pressure type for the production of slaked lime. The Schaffer hydrator produces 15 ton/hr. The stack from this unit contains spray nozzles which direct a stream of water upwards and downwards in the stack. As a result, no sampling site is available that can meet minimum criteria.

The pressure hydrator is a batch operation which produces 5 tons per batch or about 9 tons per hour. The only emissions from the process occur when the batch load is dumped, between 2 or 3 minutes per batch. There is no flow in the exhaust stack unless the batch is being dumped. Sampling performed on this stack indicated an emission rate of 17 lb/hr. The sampling equipment used on this test was not specified.

IV. Safety Checklist

A. Personnel Protection Equipment (check if required)

Item	Plant	MRC	Item	Plant	MRC
Safety glasses	✓	✓	Dust masks		✓
Goggles			Vapor masks		
Side shields			Air purifying		
Face shields			Air supply		
Hard hats	✓	✓	Air packs		
Ear plugs			Chem. res't clothes		
Safety shoes	✓	✓	Heat res't clothes		
Life belt			Chem. res't gloves		
Ladder climbing device			Heat res't gloves		✓
			First aid		✓
Ground fault interrupt		✓	Fire extinguisher		✓
Grounding clamp			_____		
_____			_____		
			_____		

B. Test Site

1. Ladders

General condition Good Rest stops _____

Cage _____ Special belts _____

Comments _____

2. Scaffold-platforms - need to be installed at inlet

General condition _____ Guardrails _____

Toeboards _____ Screening _____

Comments _____

3. Smoking restrictions None

4. Vehicle traffic rules None

_____

5. Evacuation procedures _____

_____

_____

6. Alarms _____

7. Hospital location Fremont - 14 miles

   Phone _____

8. Emergency numbers _____

V. Plant Entry

A. Plant Requirements Contractor to supply proof of Insurance and workman compensation coverage

B. MRC Agreement Insurance and Workman's compensation data will be supplied

C. Potential Problems None

VI. Sampling Handling

Method	Cleanup Location	Analysis Location	Shipment Where to	Shipment How	Comments*
5	At Plant	Dayton	Dayton	Truck	Weaton Bottles
7	Dayton	Dayton	Dayton	Truck	
Particle Sizing	At Plant	Dayton	Dayton	Truck	

* Comments to include need for special bottles (Weaton, etc.) and other special handling required.

VII. Level of Effort

Cost Item	Estimated Manhours*
1. Planning and Administration	10
2. Travel	40
3. Setup and Cleanup	24
4. Field Testing	120
5. Laboratory Analysis	72
6. Report Preparation	36
7/8. Subcontracting	-
9. Presurvey	-
10. Sub-total Manhours	302
11. Cost per Manhour	27.642
12. Cost of Labor (line 10 times line 11)	$8,348
13. Other Direct Costs (Itemized)	
Ports installed	Plant supplied
Scaffolding rental	$ 500
14. Total Cost (line 12 plus line 13)	$8,848

* Simultaneous sampling inlet and outlet on preheater line.

Method 5 - 3 runs at each location

3 NO_x runs at convenient location

2 particle sizing on inlet and 2 on outlet

5 men team

A - team leader & particle size

B & C - inlet

D & E - outlet

VIII. Field Test Schedule

Day \ Time	AM	PM
Sunday		
Monday	Travel 5 men to Gibsonburg	Calcimatic Kiln Traverse and moisture on inlet and outlet
Tuesday	1 Method 5 (B & C) 1 Method 5 (D & E)	1 Method 7 2 Particle Sizing Runs
Wednesday	1 Method 5 (B & C) 1 Method 5 (D & E)	2 Particle Sizing
Thursday	1 Method 5 (B & C) 1 Method 5 (D & E) 1 Method 7	Travel Home (5 men)
Friday		
Saturday		