FINAL OK 10441

COAL PREPARATION PLANT EMISSION TESTS

Note: This is a reference cited in *AP 42, Compilation of Air Pollutant Emission Factors, Volume I Stationary Point and Area Sources.* AP42 is located on the EPA web site at www.epa.gov/ttn/chief/ap42/

The file name refers to the reference number, the AP42 chapter and section. The file name "ref02_c01s02.pdf" would mean the reference is from AP42 chapter 1 section 2. The reference may be from a previous version of the section and no longer cited. The primary source should always be checked.

TEST NO. 72-CI-19(CCL)

CONSOLIDATION COAL COMPANY

Bishop, West Virginia

Prepared for

ENVIRONMENTAL PROTECTION AGENCY

Research Triangle Park

North Carolina 27711

Contract No 68-02-0233

SCOTT RESEARCH LABORATORIES, INC.

PLUMSTEADVILLE, PENNSYLVANIA 18949

SRL 1281 25 1172

CONTINUATION

Environmental Protection Agency
Test No. 72-CI-19(CCL)
Thomas E. Ward, Project Test Officer
Consolidation Coal Company
Bishop, West Virginia, Norman R. Troxel

November 1972

SCOTT RESEARCH LABORATORIES, INC.
Plumsteadville, Pennsylvania 18949
68-02-0233

TABLE OF CONTENTS

	Page
1.0 INTRODUCTION	1-1
2.0 SUMMARY OF RESULTS	2-1
3.0 PROCESS DESCRIPTION	3-1
4.0 LOCATION OF SAMPLING POINTS	4-1
5.0 SAMPLING AND ANALYTICAL PROCEDURES	5-1
APPENDIX A COMPLETE PARTICULATE RESULTS WITH EXAMPLE CALCULATIONS	A-1
APPENDIX B FIELD DATA	B-1
APPENDIX C STANDARD SAMPLING PROCEDURES	C-1
APPENDIX D LABORATORY REPORT	D-1
D.1 ON-SITE HANDLING AND TRANSFER, PARTICULATE	D-1
D.2 LABORATORY HANDLING AND ANALYSIS, PARTICULATE	D-2
APPENDIX E TEST LOG	E-1
APPENDIX F RELATED REPORTS	F-1
APPENDIX G PROJECT PARTICIPANTS AND TITLES	G-1

SRL 1281 25 1172

1.0 INTRODUCTION

Scott Research Laboratories, Inc. performed source sampling tests at the Bishop, West Virginia plant of Consolidation Coal Company during the week of October 23, 1972. The plant uses a Research Cottrell venturi scrubber to control the exhaust gas emissions from a coal cleaning and preparation operation.

The outlet exhaust gases, as they were being emitted to the atmosphere, were sampled and analyzed for the determination of total particulate concentrations and loadings.

This plant had been tested by Scott previously during the week of February 28, 1972.

Three complete runs were performed at the plant. One run was conducted on October 24 and one on October 25, 1972. The third run was started on October 25 and was completed on October 26, 1972. Figure 1 shows the location of the sampling point at the plant.

SRL 1281 25 1172

CONSOLIDATION COAL COMPANY

BISHOP, WEST VIRGINIA

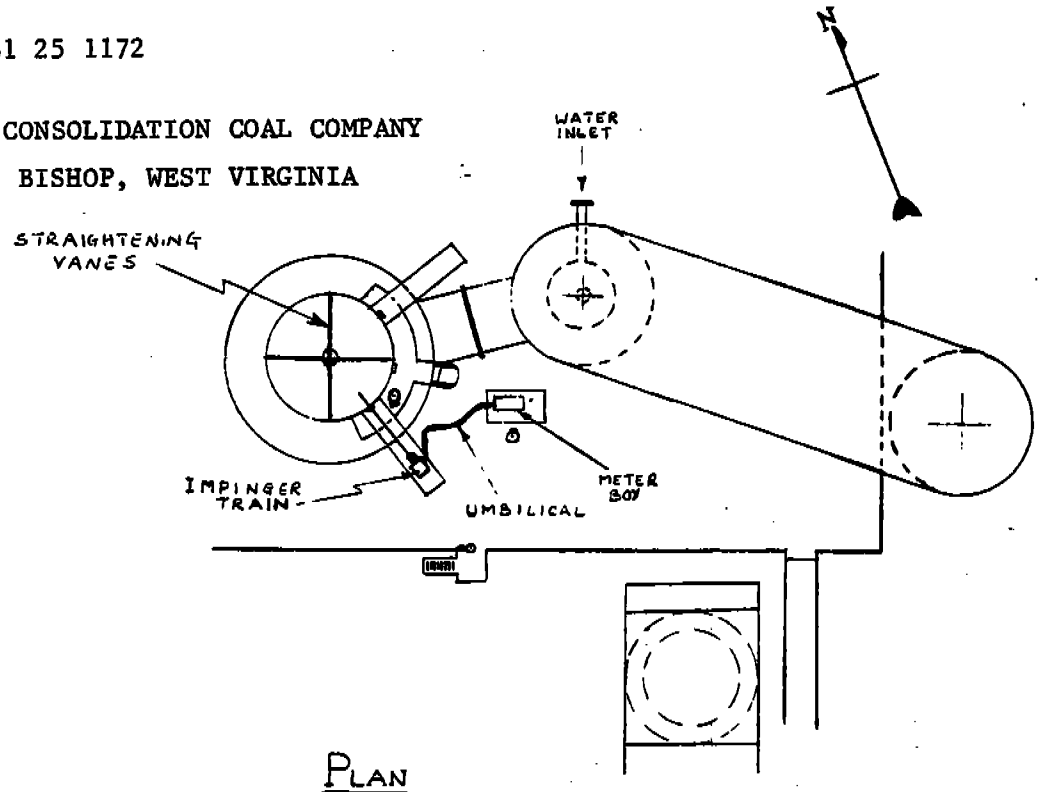

PLAN

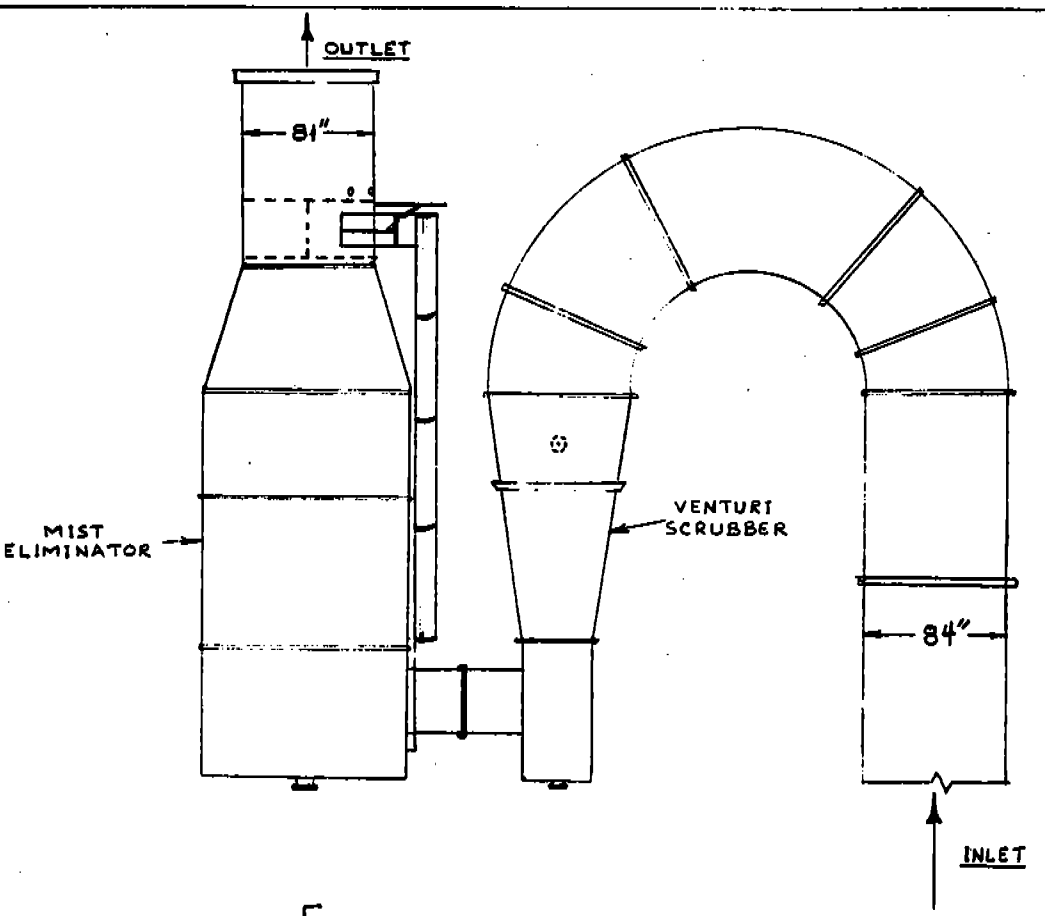

ELEVATION

FIGURE 1 - SAMPLE POINT LOCATIONS

JS
APR 5 1972

2.0 SUMMARY OF RESULTS

A summary of test results is presented in Table 1. The particulate weights are summarized and shown in Table 2, with all of the particulate results included as Appendix A. The raw data sheets are included as Appendix B.

The results of the three tests were all fairly close and gave an average total particulate concentration of 0.021 gr/scf. This compares favorably with an average total particulate concentration of 0.017 gr/scf. found during the previous test work.

SRL 1281 25 1172

TABLE 1 SUMMARY OF TEST RESULTS

Run Number	1	2	3
Sample Date	10/24/72	10/25/72	10/25/72 10/26/72
Sample Gas Vol., scf.	80.14	80.10	77.59
Moisture, %	14.14	13.41	13.58
Stack Gas Temp., ^{o}F.	126	123	126
Stack Gas Velocity, fpm	4410	4309	4177
Stack Gas Vol., SCFM	114,589	113,853	109,405
Particulate Collected			
Probe, cyclone, filter, mg.	80.8	107.5	108.0
Total, mg.	87.3	113.0	124.5
Particulate Concentration			
Probe, cyclone, filter, gr/scf.	0.016	0.021	0.021
Total, gr/scf.	0.017	0.022	0.025
Particulate Emissions			
Probe, cyclone, filter, lb/hr.	15.25	20.17	20.10
Total, lb/hr.	16.48	21.20	23.17
Percent Isokinetic	99.24	99.82	100.63

SRL 1281 25 1172

TABLE 2 PARTICULATE WEIGHTS SUMMARY

Run Number	1	2	3
Container 1, mg.	30.3	28.0	38.5
Container 2, mg.	50.5	79.5	69.5
Container 3a, mg.	3.0	1.0	7.0
Container 3b, mg.	0.0	0.0	0.5
Container 5, mg.	3.5	4.5	9.0
Probe, cyclone, filter, mg.	80.8	107.5	108.0
Total, mg.	87.3	113.0	124.5

3.0 PROCESS DESCRIPTION

The Bishop preparation plant was built in the mid 1950's and has been upgraded to process coal through froth flotation cells. An old Link-Belt multilouvre thermal dryer was replaced by a Link-Belt Fluid Bed dryer in March 1970. At that time, a Research Cottrell Flooded Disc scrubber was installed to clean the exhaust gases before being emitted to the atmosphere. The dryer exhaust fans are rated at 183,000 cfm at 170°F and the scrubber design calls for a 26" ΔP according to Research Cottrell.

The Bishop preparation plant has the capability to process all of its stored uncleaned coal in five hours of continuous operation. Design specifications indicate a maximum of 50 percent of the filter cake from flotation cells can be dried in the thermal dryer. Design capacity of the dryer is 368 TPH cleaned, dried coal and 40 TPH exhaust moisture.

SRL 1281 25 1172

PROCESS DIAGRAM

Plant: Consolidation Bishop
Seam: Pocahantas #3 & #5
Test Date: Week of October 23, 1972

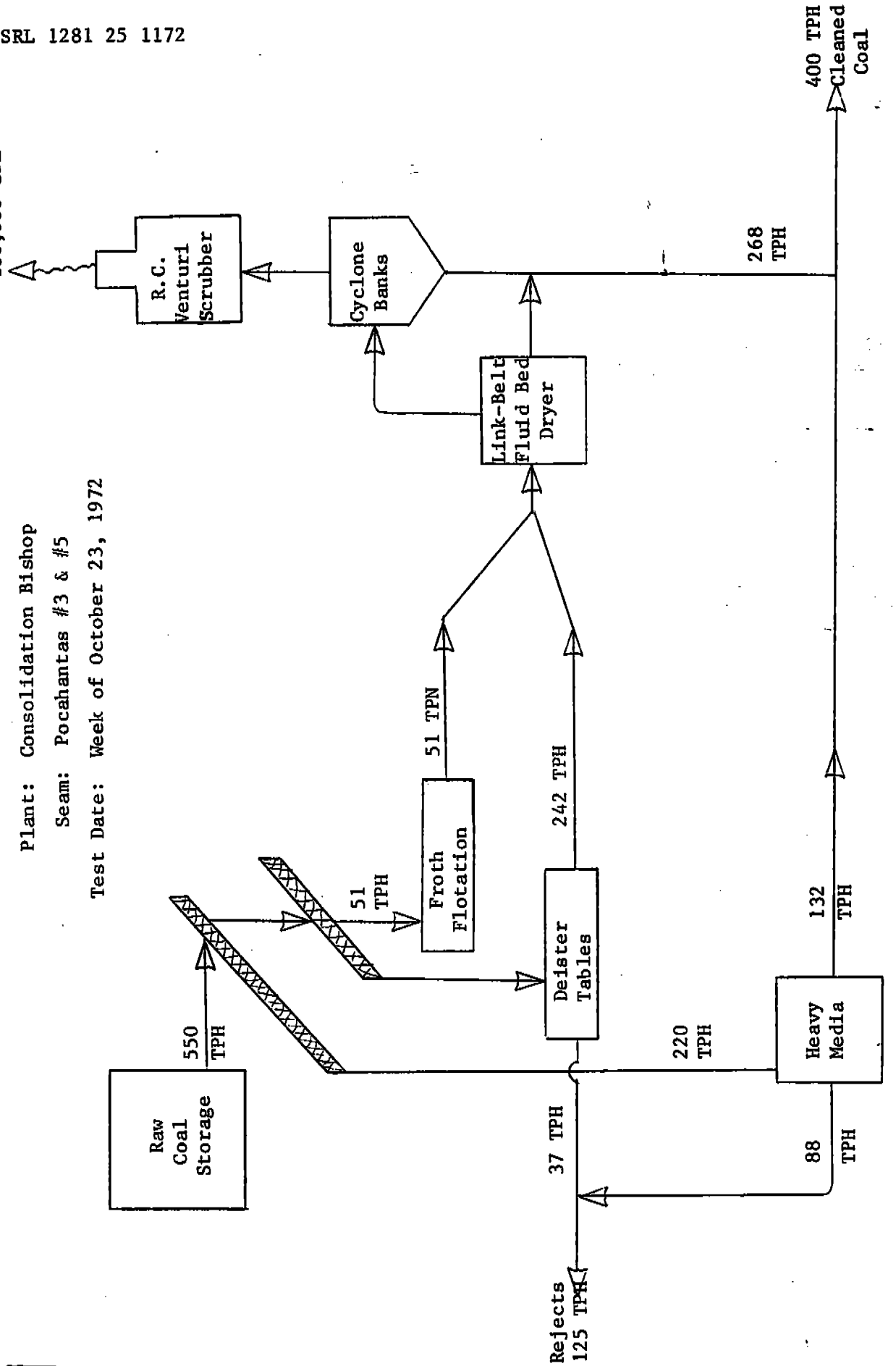

4.0 LOCATION OF SAMPLING POINTS

The exhaust gases from the coal cleaning operation pass through an 84 inch diameter duct into a Research Cottrell venturi scrubber. From the venturi scrubber, the gases flow through a mist eliminator and are then emitted to the atmosphere through an 81 inch diameter stack.

The location (outlet) for sampling the gases prior to the discharge to the atmosphere was in a straight section of the 81 inch diameter stack atop the mist eliminator. The sampling ports were located approximately 7 feet upstream from the top of the stack and approximately 10 feet downstream from the outlet of the mist eliminator.

There were three sample ports spaced 45° apart at the outlet location. The two ports at 90° apart were used for the particulate sampling. The outlet ports were approximately 30 feet above the platform area where the particulate sample control units were located. Special support systems were required to hold the particulate sampling train. Figure 1 shows the physical layout of the system and the location of the sample ports.

Figure 2 shows the traverse points used at the sample point location. Forty-eight traverse points were sampled for 2.5 minutes each. In order to stay at least two inches away from the wall, the first two and last two points on the traverse were combined. Thus, the first and last points (each containing two traverse points) were sampled for five minutes each. The traverse points were chosen in accordance with Method 1 published in the Federal Register, Volume 36, No. 24.

The two ports were designated as A and B. A was the port on the left, and B was the port 90° to the right of A.

5.0 SAMPLING AND ANALYTICAL PROCEDURES

Samples were collected for the determination of particulate matter from the outlet of the venturi scrubber. The sampling and analytical procedures used were the same as those specified by Method 5, "Determination of Particulate Emissions from Stationary Sources", and published in the Federal Register, Volume 36, No. 247, Thursday, December 23, 1971. This method is attached as Appendix C. In addition, the impinger catch was analyzed.

Briefly, the method consists of withdrawing a sample isokinetically from the stack through a heated glass probe into a cyclone, filter, and impinger train. The cyclone and filter are contained in a heated box. The sample volume is measured with a dry gas meter, and isokinetic conditions are maintained by monitoring the stack gas velocity with an "S" type pitot tube. After testing is completed, the exposed surfaces of the sample train are thoroughly washed including the probe. The washings are evaporated, dried, and weighed along with the filter in order to obtain a total weight of particulate matter collected.

The stack gas velocity and flow rate were measured using Method 2, "Determination of Stack Gas Velocity and Volumetric Flow Rate (Type S Pitot Tube)", and published in the Federal Register. Using both the weight of sample collected and the flow rate determined, a total particulate emission rate was calculated.

APPENDIX A

COMPLETE PARTICULATE RESULTS WITH EXAMPLE CALCULATIONS

SOURCE TESTING CALCULATION FORMS

Test. No. 72-CI-19 No. Runs 3 (outlet)

Name of Firm CONSOLIDATION COAL CO.

Location of Plant BISHOP, W. Va.

Type of Plant Coal Cleaning

Control Equipment Venturi Scrubber, Mist eliminator

Sampling Point Locations Outlet (81" dia); 2 ports, 24 points each. 2½ min each point

Pollutants Sampled Particulate

Time of Particulate Test:

Run No. 1 Date 10/24/72 Begin 1310 End 1516

Run No. 2 Date 10/25/72 Begin 0946 End 1315

Run No. 3 Date 10/25/72 & 10/26/72 Begin 1333 & 0854 End 1500 & 0941

PARTICULATE EMISSION DATA

Run No.	1	2	3			
P_b barometric pressure, "Hg Absolute	28.29	28.38	28.33			
P_{Δ} orifice pressure drop, "H_2O	1.616	1.566	1.466			
V_m volume of dry gas sampled @ meter conditions, ft.^{3}	87.659	85.595	83.240			
T_m Average Gas Meter Temperature, ^oF	90	77.7	80			
$V_{m_{std.}}$ Volume of Dry Gas Sampled @ Standard conditions, ft.^{3}	80.142	80.095	77.590			
V_w Total H_2O collected, ml., Impingers & Silical Gel.	278.4	261.7	257.3			
$V_{w_{gas}}$ Volume of Water Vapor Collected ft.^{3} @ Standard Conditions*	13.196	12.405	12.196			

* 70°F, 29.92" Hg.

PARTICULATE EMISSION DATA (cont'd)

Run No.	1	2	3			
%M - % Moisture in the stack gas by volume	14.138	13.411	13.583			
M_d - Mole fraction of dry gas	0.8586	0.8659	0.8642			
% CO_2 } ASSUMED	0.6	0.6	0.6			
% O_2 } ASSUMED	19.83	19.83	19.83			
% N_2 } ASSUMED	79.57	79.57	79.57			
M W_d - Molecular weight of dry stack gas	28.889	28.889	28.889			
M W - Molecular weight of stack gas	27.349	27.429	27.410			
ΔP_s - Velocity Head of stack gas, In.H_2O	—	—	—			
T_s - Stack Temperature, ^oF	126	123	126	(Average Values)		
$(\Delta P_s X(T_s+460)$	28.04	27.48	26.61			
P_s - Stack Pressure, "Hg. Absolute	27.98	28.07	28.02	(Average Values)		
V_s - Stack Velocity @ stack conditions, fpm	4410	4308.6	4177.2			
A_s - Stack Area, $in.^2$	5153.0	5153.0	5153.0			
Q_s - Stack Gas Volume @ Standard Conditions. *SCFM	94589	113853	109405			
T_t - Net Time of Test, min.	120	120	120			
D_n - Sampling Nozzle Diameter, in.	0.196	0.196	0.196			
%I - Percent isokinetic	99.24	99.82	100.63			
m_f - Particulate - probe, cyclone and filter, mg.	80.8	107.5	108.0			
m_t - Particulate - total, mg.	87.3	113.0	124.5			
C_{an} - Particulate - probe, cyclone, and filter, gr/SCF	0.01553	0.02067	0.02144			
C_{ao} - Particulate - total, gr/SCF	0.01678	0.02173	0.02471			
C_{at} - Particulate - probe, cyclone, & filter gr/cf @ stack conditions	0.01127	0.01525	0.01568			

Run No.	1	2	3			
C_{cu} - Particulate, total, gr/cf @ stck cond.	0.01218	0.01604	0.01807			
C_{cu} - Particulate, probe, cyclone and filter, lb/hr.	15.251	20.168	20.102			
C_{ex} - Particulate - total, lb/hr.	16.478	21.202	23.168			
% EA - % Excess air @ sampling point	1484.7	1484.7	1484.7			

*70°F. 29.92" Hg.

Sample Calculation
Run #1

PARTICULATE CALCULATIONS

1. Volume of dry gas sampled at standard conditions - 70°F, 29.92" - Hg, ft.^{3}

$$V_{m_{std}} = \frac{17.7 \times V_m \left(P_B + \frac{P_m}{13.6}\right)}{(T_m + 460)} = \text{Ft.}^3$$

$$= \frac{17.7 \times 87.659 \left(28.29 + \frac{1.616}{13.6}\right)}{(90 + 460)} = 80.142 \text{ ft}^3$$

2. Volume of water vapor at 70°F & 29.92" Hg, Ft.^{3}

$$V_{w_{gas}} = 0.0474 \times V_w = \text{Ft.}^3 \quad = 0.0474 \times 278.4 = 13.196 \text{ ft}^3$$

3. % moisture in stack gas

$$\%M = \frac{100 \times V_{w_{gas}}}{V_{m_{std}} + V_{w_{gas}}} = \% \quad = \frac{100 \times 13.196}{80.142 + 13.196} = 14.138 \%$$

4. Mole fraction of dry gas

$$M_d = \frac{100 - \%M}{100} \quad = \frac{100 - 14.138}{100} = 0.8586$$

5. Average molecular weight of dry stack gas

$$MW_d = (\%CO_2 \times \tfrac{44}{100}) + (\%O_2 \times \tfrac{32}{100}) + (\%N_2 \times \tfrac{28}{100}) + (\%CO \times \tfrac{28}{100})$$

$$= (0.6 \times 0.44) + (19.83 \times 0.32) + (79.57 \times 0.28) + (0.0 \times 0.28)$$

$$= 28.889$$

6. Molecular weight of stack gas

$$M_s = M_{d} \times M_d + 18 (1 - M_d) = 28.889 \times 0.8586 + 18(1-0.8586)$$

$$= 27.349$$

7. Stack velocity @ stack conditions, fpm

$$V_s = 4350 \times \sqrt{\Delta P_s \times (T_s + 460)} \left[\frac{1}{P_s \times M_s} \right]^{1/2} = \text{fpm} = 4410.0 \text{ fpm}$$

(Average of 48 velocities)

8. Stack gas volume @ standard conditions, SCFM

$$Q_s = \frac{0.123 \times V_s \times A_s \times M_d \times P_s}{(T_s + 460)} = \text{SCFM} = \frac{0.123 \times 4410 \times 5153 \times 0.8586 \times 27.98}{(126+460)}$$

$$= 114589 \text{ SCFM}$$

9. Per cent isokinetic

$$\%I = \frac{1032 \times (T_s + 460) \times V_{m_{std}}}{V_s \times T_t \times P_s \times M_d \times (D_n)^2} = \% \frac{1032 \times (126+460) \times 80.142}{4410 \times 120 \times 22.98 \times 0.8586 \times (0.196)^2}$$

$$= 99.24\%$$

10. Particulate - probe, cyclone, & filter, gr/SCF

$$C_{an} = 0.0154 \times \frac{M_f}{V_{m\ std}} = \text{gr/SCF} = 0.0154 \times \frac{80.8}{80.142}$$

$$= 0.01553 \text{ gr/scf}$$

11. Particulate - total, gr/SCF

$$C_{ao} = 0.0154 \times \frac{M}{V_{m_{std}}} = \text{gr/SCF} = 0.0154 \times \frac{87.3}{80.142} = \underline{0.01678} \text{ gr/SCF}$$

12. Particulate - probe, cyclone & filter, gr/CF at stack conditions

$$C_{at} = \frac{17.7 \times C_{an} \times P_s \times M_d}{(T_s + 460)} = \text{gr/CF} = \frac{17.7 \times 0.01533 \times 27.98 \times 0.8186}{(126+460)}$$

$$= \underline{0.01127} \text{ gr/cF}$$

13. Particulate - total, gr/CF @ stack conditions

$$C_{au} = \frac{17.7 \times C_{ao} \times P_s \times M_d}{(T_s + 460)} = \text{gr/CF} = \frac{17.7 \times 0.01678 \times 27.98 \times 0.8586}{(126+460)}$$

$$= \underline{0.01218} \text{ gr/CF}$$

14. Particulate - probe, cyclone, & filter, lb/hr.

$$C_{aw} = 0.00857 \times C_{an} \times Q_s = \text{lb/hr.} = 0.00857 \times 0.01533 \times 114589$$

$$= \underline{15.251} \text{ lb/hr}$$

15. Particulate - total, lb/hr.

$$C_{ax} = 0.00857 \times C_{ao} \times Q_s = \text{lb/hr.} = 0.00857 \times 0.01678 \times 114589$$

$$= \underline{16.478} \text{ lb/hr}$$

$$\% \text{ EA} = \frac{100 \times \% O_2}{0.266 \times \% N_2 - \% O_2} = \frac{100 \times 19.83}{0.266 \times 79.57 - 19.83}$$

$$= 1484.7 \%$$

APPENDIX B

FIELD DATA

Leak Rate .00 1 cfm

FIELD DATA

PLANT Consolidation Coal Bishop Va
DATE 10/24/72
SAMPLING LOCATION Outlet
SAMPLE TYPE Point 4
RUN NUMBER 1
OPERATOR 94W
AMBIENT TEMPERATURE 60
BAROMETRIC PRESSURE 28.29
STATIC PRESSURE, (P_s) .3 4.08 (1)
FILTER NUMBER (s)

PROBE LENGTH AND TYPE 8 ft glass.
NOZZLE I.D. .196
ASSUMED MOISTURE, % .13
SAMPLE BOX NUMBER
METER BOX NUMBER
METER $\Delta H_@$ 1.84
C FACTOR .94 chd form 234 10/23
PROBE HEATER SETTING 300
HEATER BOX SETTING 300
REFERENCE Δp 1.6

SCHEMATIC OF TRAVERSE POINT LAYOUT

READ AND RECORD ALL DATA EVERY 2.5 MINUTES

ID 81"

TRAVERSE POINT NUMBER	SAMPLING TIME, min / CLOCK TIME (24-hr CLOCK)	GAS METER READING (V_m), ft³	VELOCITY HEAD (Δp_s), in. H_2O	ORIFICE PRESSURE DIFFERENTIAL (ΔH), in. H_2O DESIRED	ORIFICE PRESSURE DIFFERENTIAL (ΔH), in. H_2O ACTUAL	STACK TEMPERATURE (T_s), °F	DRY GAS METER TEMPERATURE INLET ($T_{m\,in}$), °F	DRY GAS METER TEMPERATURE OUTLET ($T_{m\,out}$), °F	PUMP VACUUM, in. Hg	SAMPLE BOX TEMPERATURE, °F	IMPINGER TEMPERATURE, °F
	13 / 1310	792.697 ~~[illegible]~~									
1	2.5		3.0	3.3	3.3	125	65	65	19	300	
2	5	797.733	3.0	3.3	3.3	125	65	65	19		
3	7.5	800.000	3.0	3.3	3.2	100	87	68	20		
4	10	802.774	2.7	3.0	3.0	125	91	68	18.8		
5	12.5	805.214	2.4	2.7	2.7	125	95	69	16.5		
6	15	808.000	2.2	2.5	2.5	125	99	69	14.5		
7	17.5	809.70	1.9	2.2	2.2	128	103	72	12.0		60
8	20	811.826	1.5	1.7	1.7	125	103	74	8.7		
9	22.5	813.628	1.3	1.5	1.5		102	74	7.5		
10	25	815.494	1.0	1.7	1.7	125	102	76	8.5		
11	27.5	817.445	1.5	1.7	1.7	125	102	76	8.5		
12	30	819.287	1.6	1.83	1.83	130	102	77	9.0		
13	32.5	821.223	1.6	1.83	1.83		103	79	9.0		60
14	35	822.848	.90	1.15	1.15	130	102	79	5.9		
15	37.5	824.412	.80	1.15	1.15	130	101	80	5.9		
16	40	825.919	.80	.93	.93		100	80	5.2		
17	42.5	827.398	.83	.98	.98	130	100	81	5.2		50
18	45	828.884	.80	.93	.93		100	82	5.2		
19	47.5	830.389	.85	1.00	1.00	130	100	82	5.6		50
20	50	831.918	.87	1.02	1.02	130	100	83	5.8		
21	52.5	833.468	.94	1.10	1.10		100	83	5.9		
22	55	835.024	.94	1.10	1.10	130	100	83	5.9		50
23	57.5		.98	1.5	1.5	130	100	84	6.0		
24	60 / 1410	838.173	.98	1.5	1.5	130	100	84	6.0		

EPA (Dur) 235
4/72

Run 1 shift 2

TRAVERSE POINT NUMBER	SAMPLING TIME, min / CLOCK TIME (24-hr CLOCK)	GAS METER READING (V_m), ft^3	VELOCITY HEAD (Δp_s), in. H_2O	ORIFICE PRESSURE DIFFERENTIAL (ΔH), in H_2O		STACK TEMPERATURE (T_s), °F	DRY GAS METER TEMPERATURE		PUMP VACUUM, in Hg	SAMPLE BOX TEMPERATURE, °F	IMPINGER TEMPERATURE, °F
				DESIRED	ACTUAL		INLET ($T_{m\,in}$), °F	OUTLET ($T_{m\,out}$), °F			
	1416	836.173									
B 1											
2	5	842.666	2.1	2.4	2.4	130	94	83	12.8	300	50
3	7.5	844.859	1.9	2.2	2.2		102	84	12.1	300	
4	10	846.938	1.7	1.95	1.95		104	84	10.8		
5	12.5	848.818	1.4	1.6	1.6	130	105	84	8.7		
6	15	850.564	1.2	1.4	1.4		104	84	8.1		
7	17.5	852.264	1.15	1.35	1.35		104	84	8.0		
8	20	854.355	1.1	1.25	1.25	130	104	85	7.5		
9	22.5	855.00	.93	1.1	1.1		103	83	7.0		
10	25	857.034	.90	1.05	1.05	130	102	85	6.8		
11	27.5	858.582	1.0	1.15	1.15		102	85	6.9		
12	30	860.136	.9	1.1	1.15	122					
13	32.5	862.242	2.10	2.3	2.3		102	85	13.5		
14	35	864.101	1.2	1.4	1.4		105	85	8.4		
15	37.5	865.662	.85	1.0	1.0	122	104	86	6.5		
16	40	867.175	.85	1.0	1.0		103	86	6.5		
17	42.5	868.662	.80	.94	.94	122	103	87	6.3		50
18	45	870.101	.75	.88	.88	123	102	88	6.2		
19	47.5	871.624	.92	1.07	1.07	123	102	87	7.1		
20	50	873.177	.95	1.1	1.1	123	102	87	7.2		
21	52.5	874.574	1.2	1.4	1.4		103	87	8.6		
22	55	876.248	1.3	1.5	1.5	123	103	87	8.9		
23	1516		1.4	1.6	1.6	122	105	88	9.6		50
24	60	880.356	1.4	1.6	1.6	122	105	88	9.6		
							100.35	80.93			

EPA (Oct) 236

B-3

Consolidated Coal, Virginia

B-4

WATER VOLUME

Run No. 1 Date 10/24/72

Bubbler #1 360 Silica Gel No. 1 Wgt. g. 505.0

#2 138

#3 4 Bubbler #4 529.4

12 # Front half
454 water

Gross

Water Added(-) 300 Gross Wgt.(-) 505.0

Net (A) 254 cc Net (B) 24.4 g

Net (A) 254

Net (B) (+) 24.4

278.4

Total Water [redacted] cc

Form R&D 109

Leak Rate .001 CFM

Run 2

FIELD DATA

PLANT Consolidated Coal Bishop Va

DATE 10/25/72

SAMPLING LOCATION Outlet

SAMPLE TYPE Pitot BS

RUN NUMBER 2

OPERATOR GW

AMBIENT TEMPERATURE 45

BAROMETRIC PRESSURE 28.38

STATIC PRESSURE, (P_s) -.3

FILTER NUMBER (s)

80" ID

4.08 (1)

PROBE LENGTH AND TYPE 5 ft glass

NOZZLE I.D. .196

ASSUMED MOISTURE, % 13

SAMPLE BOX NUMBER

METER BOX NUMBER

METER $\Delta H_@$ 1.84

C FACTOR .94 Calc from 234 10/23

PROBE HEATER SETTING 30

HEATER BOX SETTING 300

REFERENCE Δp 1.6

SCHEMATIC OF TRAVERSE POINT LAYOUT

10 8/4"

READ AND RECORD ALL DATA EVERY 2.5 MINUTES

TRAVERSE POINT NUMBER	CLOCK TIME (24-hr CLOCK) SAMPLING TIME, Δθ	GAS METER READING (V_m), ft^3	VELOCITY HEAD (Δp_s), in. H_2O (3)	ORIFICE PRESSURE DIFFERENTIAL (ΔH), in. H_2O (4) DESIRED	ACTUAL	STACK TEMPERATURE (T_s), °F (2)	DRY GAS METER TEMPERATURE INLET ($T_{m\,in}$), °F	DRY GAS METER TEMPERATURE OUTLET ($T_{m\,out}$), °F	PUMP VACUUM, in. Hg	SAMPLE BOX TEMPERATURE, °F	IMPINGER TEMPERATURE, °F
		886,853									
B 1		891,352	2.2	2.5	2.5	120	54	51			
2	5	892,777	2.2	2.5	2.5	120	54	51	8.5	300	
3	7.5	893,552	2.1	2.14	2.14	125	78	55	12.2		
4	10	895,646	1.8	2.09	2.09						
5	12.5	897,554	1.5	1.7	1.7		55	58	5.9		
6	15	899,450	1.4	1.6	1.6	125	56	60	5.0		
7	17.5	901,189	1.4	1.6	1.6		56	61	5.0		
8	20	902,915	1.2	1.4	1.4		55	62	6.9		
9	22.5	904,458	1.0	1.15	1.15	125	58	64	5.7		
10	25	906,109	1.2	1.4	1.4		58	65	6.6		
11	27.5	907,774	1.2	1.4	1.4	125	59	66	6.6		
12	30	909,338	1.0	1.15	1.15		90	68	5.6		
13	32.5	911,464	2.0	2.3	2.3	125	92	69	11.6		
14	35	913,388	1.5	1.7	1.7	126	94	70	5.0		
15	37.5	915,046	1.1	1.25	1.25		94	71	5.9		
16	40	916,558	.87	1.02	1.02		93	72	5.1		
17	42.5	918,024	.82	.95	.95	125	92	73	5.0		
18	45	919,528	.75	.89	.89		92	73	5.2		
19	47.5	921,024	.90	1.05	1.05	125	92	73	5.2		
20	50	922,538	.90	1.05	1.05		92	74	5.2		
21	52.5	924,159	1.1	1.25	1.25	125	93	75	6.0		
22	55	925,712	1.0	1.15	1.15		93	75	5.3		
23	57.5 1046		1.1	1.25	1.25	125	93	76	5.8		
24	60	928,918	1.1	1.25	1.25	125	93	76			

1046 — 2.5 — manual data sheets for reports

B-5

EPA (Dur) 235

Run 2 sheet 2

TRAVERSE POINT NUMBER	SAMPLING TIME, min / CLOCK TIME (24-hr CLOCK)	GAS METER READING (V_m), ft^3	VELOCITY HEAD (Δp_s), in. H_2O	ORIFICE PRESSURE DIFFERENTIAL (ΔH), in H_2O		STACK TEMPERATURE (T_s), °F	DRY GAS METER TEMPERATURE		PUMP VACUUM, in Hg	SAMPLE BOX TEMPERATURE, °F	IMPINGER TEMPERATURE, °F
				DESIRED	ACTUAL		INLET ($T_{m\,in}$), °F	OUTLET ($T_{m\,out}$), °F			
	1215	926.918									
1	2.5		2.6	2.8	2.9	113	60	60			
2	5	934.621	2.6	2.9	2.9	113	60	60	17.7		
3	7.5	936.668	3.1	3.16	3.5						
4	10	939.274	3.0	3.3	3.3	117	83	60	18.0		50
5	12.5	941.692	2.5	2.8	2.8		89	62	14.5		
6	15	943.984	2.2	2.5	2.5		93	63	12.0		
7	17.5	946.198	2.0	2.3	2.3	108	94	65	11.4		
8	20	948.240	1.6	1.85	1.85	120	95	66	9.0		
9	22.5	950.150	1.4	1.6	1.6	123	94	67	7.6		
10	25	951.874	1.4	1.6	1.6	125	94	68	7.6		
11	27.5	953.510	1.5	1.75	1.75	125	94	69	8.1		
12	30	955.672	1.6	1.85	1.85		96	70	8.5		
13	32.5	957.498	1.4	1.6	1.6	126	96	72	7.6		
14	35	958.882	.7	.83	.83	126	94	73	4.8		
15	37.5	960.358	.7	.83	.83	124	94	73	4.8		
16	40	961.666	.6	.72	.72	125	92	74	4.3		
17	42.5	962.994	.65	.77	.77	125	92	74	4.5		
18	45	964.284	.6	.72	.72	126	92	74	4.3		
19	47.5	965.649	.7	.83	.83	126	92	75	4.9		50
20	50	966.983	.65	.77	.77	126	92	76	4.7		
21	52.5	968.318	.65	.77	.77	128	92	76	4.7		
22	55	969.087	.70	.83	.83		92	76	4.9		
23	60										
24	1315	972.448	.70	.83	.83	127	92	76	4.9		

89.62 68.57

Consolidated Coal - Bishop

B-7

WATER VOLUME

Run No. 2 Date 10/25/72

Bubbler #1 309 Silica Gel No. 2 Wgt. g. 506.6

#2 129

#3 4 Bubbler #4 526.3

Gross 944 g

Water Added(-) 200 Gross Wgt.(-) 506.6

Net (A) 242 cc Net (B) 19.7 g

Net (A) 242

Net (B) (+) 19.7

Total Water 261.7 cc

Form R&D 109

[redacted] Run 3

FIELD DATA

PLANT Consolidated Coal Bishop U 2
DATE 10/25/72
SAMPLING LOCATION Outlet
SAMPLE TYPE Part 5
RUN NUMBER 3
OPERATOR JJW
AMBIENT TEMPERATURE 47° F
BAROMETRIC PRESSURE 25.53
STATIC PRESSURE, (P_s) -3 4.08
FILTER NUMBER (s)

PROBE LENGTH AND TYPE 5 ft glass
NOZZLE I.D.
ASSUMED MOISTURE, % 13
SAMPLE BOX NUMBER
METER BOX NUMBER
METER $\Delta H_@$ 1.84
C FACTOR .194 Check from 234 10/23
PROBE HEATER SETTING 30
HEATER BOX SETTING 300
REFERENCE Δp 1.6

SCHEMATIC OF TRAVERSE POINT LAYOUT

READ AND RECORD ALL DATA EVERY 2.5 MINUTES

ID 81"

TRAVERSE POINT NUMBER	SAMPLING TIME, min / CLOCK TIME (24-hr CLOCK)	GAS METER READING (V_m), ft^3	VELOCITY HEAD (Δp_s), in. H_2O	ORIFICE PRESSURE DIFFERENTIAL (ΔH), in. H_2O		STACK TEMPERATURE (T_s), °F	DRY GAS METER TEMPERATURE		PUMP VACUUM, in. Hg	SAMPLE BOX TEMPERATURE, °F	IMPINGER TEMPERATURE, °F
				DESIRED	ACTUAL		INLET ($T_{m\,in}$), °F	OUTLET ($T_{m\,out}$), °F			
	1333	972.449	3			2)					
B 1											
2	5	976.674	2.0	2.3	2.3		80	75	7.6		
3	7.5	978.752	1.8	2.1	2.1	128	89	73	8.0		
4	10	980.761	1.6	1.85	1.85	122	92	76	7.4		
5	12.5	982.594	1.4	1.6	1.6	124	94	76	6.1		
6	15	984.362	1.4	1.6	1.6	127	95	76	6.1		
7	17.5	986.086	1.2	1.4	1.4		96	77	5.8		
8	20	987.674	1.0	1.15	1.15	127	98	77	5.0		
9	22.5	989.204	.9	1.05	1.05	127	96	78	4.7		
10	25	990.736	.95	1.1	1.1		96	78	4.9		
11	27.5	992.273	.95	1.1	1.1	127	96	78	4.6		
12	30	993.796	.90	1.05	1.05	127	96	79	4.8		
13	32.5	995.719	1.6	1.85	1.85	127	96	79	7.3		
14	35	997.350	1.0	1.15	1.15		98	80	5.0		
15	39.5	000.05	.85	1.0	1.0	127	98	80	4.8		
16	40		.80	.924	.924		97	80	4.6		
17	42.5	001.672	.75	.865	.868						
18	45	003.306	.75	.858	.858	(1.08?)	96	80	4.6		
19	47.5	004.798	.75	.865	.865		96	80	4.6		
20	50	006.271	.6	.94	.94	125	97	81			
21	52.5	007.812	1.0	1.15	1.15		97	81	5.0		
22	55	009.447	1.1	1.3	1.3		98	82	5.2		
23	60 / 1433		1.6	1.85	1.85	126	99	82	7.2		
24		013.328	1.6	1.85	1.85	126	99	82	7.2		

2.5 min

B-8

EPA (Dur) 235
4/72

[redacted] 55 10/26/72 Run 3

TRAVERSE POINT NUMBER	SAMPLING TIME, min	CLOCK TIME (24-hr CLOCK)	GAS METER READING (V_m), ft^3	VELOCITY HEAD (Δp_s), in. H_2O	ORIFICE PRESSURE DIFFERENTIAL (ΔH), in. H_2O DESIRED	ORIFICE PRESSURE DIFFERENTIAL (ΔH), in. H_2O ACTUAL	STACK TEMPERATURE (T_s), °F	DRY GAS METER TEMPERATURE INLET ($T_{m\,in}$), °F	DRY GAS METER TEMPERATURE OUTLET ($T_{m\,out}$), °F	PUMP VACUUM, in Hg	SAMPLE BOX TEMPERATURE, °F	IMPINGER TEMPERATURE, °F
			013.328									
1		1440										
2	5		018.844	2.9	3.2	3.2	127	96	81	13.2		50
3	7.5		021.487	3.0	3.4	3.4	127	104	81	15.9		
4	10		023.986	2.6	2.9	2.9	127	106	81	12.5		
5	12.5		026.326	2.2	2.5	2.5		108	82	10.5		
6	15		028.546	1.9	2.2	2.2	127	108	82	9.5		
7	17.5		030.587	1.6	1.85	1.85		107	83	7.9		
8	20	1500	032.400	1.3	1.5	1.5	127	105	83	6.1		
9	22.5	0859	034.357 032.748	1.2	1.4	1.4	126	50	50	5.9		
10	25		036.022	1.2	1.4	1.4	126	57	50	7.0		
11	27.5		037.644	1.2	1.4	1.4		61	51	7.0		
12	30		039.316	1.3	1.5	1.5	126	66	52	8.0		
13	32.5		041.013	1.3	1.5	1.5		71	54	8.8		
14	35		042.404	.7	.83	.83	126	75	55	7.0	Stat	26.5
15	37.5		043.722	.65	.79	.79		77	57			
16	40		045.041	.65	.79	.79	125	78	58			
17	42.5		046.372	.65	.79	.79		80	59	7.6		
18	45		047.696	.65	.79	.79	126	81	60	7.9		
19	47.5		049.049	.70	.84	.84		84	63	8.2		
20	50		050.426	.70	.84	.84	126	84	64	8.[illegible]		
21	52.5		051.785	.70	.84	.84	126	85	65	8.5		
22	55		053.188	.75	.89	.89	126	86	66	8.9		
23	60			.75	.89	.89	126	87	67	8.9		
24		0941	056.037	.75	.89	.89	126	87	67	8.9		

B

15 sec over

Bars 29.32 10/26/72 Run 5

EPA (Dur) 236
4/72

89.77 71.95

Consolidated Coal - Bishop

B-10

WATER VOLUME

Run No. 3 Date 10/25/72 - 10/26/72

Bubbler #1 340 Silica Gel No. 3 Wgt. g. 516.2

#2 80

#3 3 Bubbler #4 538.5

12 Frontheff

Gross 435

Water Added(-) 200 Gross Wgt.(-) 516.2

Net (A) 235 cc Net (B) 22.3 g

Net (A) 235

Net (B) (+) 22.3

Total Water 2573 cc

Form R&D 109

SRL 1281 25 1172

APPENDIX C

STANDARD SAMPLING PROCEDURES

The sampling procedures used during the test are the same as those published in the Federal Register, Volume 36, Number 247, Thursday, December 23, 1971. These methods are as follows (Methods 1, 2, and 5). In addition, the impinger catch was analyzed.

method(s) prescribed by the manufacturer(s) of such instrument, the instrument shall be subject to manufacturers recommended zero adjustment calibration procedures at least once per 24-hour operating period unless the manufacturer(s) specified or recommends calibration at shorter intervals, in which case such specifications or recommendations shall be followed. The applicable method specified in the appendix of this part shall be the reference method.

(c) Production rate and hours of operation shall be recorded daily.

(d) The owner or operator of any sulfuric acid production unit subject to the provisions of this subpart shall maintain a file of all measurements required by this subpart. Appropriate measurements shall be reduced to the units of the applicable standard daily and summarized monthly. The record of any such measurement and summary shall be retained for at least 2 years following the date of such measurements and summaries.

§ 60.85 Test methods and procedures.

(a) The provisions of this section are applicable to performance tests for determining emissions of acid mist and sulfur dioxide from sulfuric acid production units.

(b) All performance tests shall be conducted while the affected facility is operating at or above the maximum acid production rate at which such facility will be operated and under such other relevant conditions as the Administrator shall specify based on representative performance of the affected facility.

(c) Test methods set forth in the appendix to this part or equivalent methods as approved by the Administrator shall be used as follows:

(1) For each repetition the acid mist and SO_3 concentrations shall be determined by using Method 8 and traversing according to Method 1. The minimum sampling time shall be 2 hours, and minimum sampling volume shall be 40 ft.³ corrected to standard conditions.

(2) The volumetric flow rate of the total effluent shall be determined by using Method 2 and traversing according to Method 1. Gas analysis shall be performed by using the integrated sample technique of Method 3. Moisture content can be considered to be zero.

(d) Acid produced, expressed in tons per hour of 100 percent sulfuric acid shall be determined during each 2-hour testing period by suitable flow meters and shall be confirmed by a material balance over the production system.

(e) For each repetition acid mist and sulfur dioxide emissions, expressed in lb./ton of 100 percent sulfuric acid shall be determined by dividing the emission rate in lb./hr. by the acid produced. The emission rate shall be determined by the equation, lb./hr.$=Q_s \times c$, where Q_s=volumetric flow rate of the effluent in ft.³/hr. at standard conditions, dry basis as determined in accordance with paragraph (c)(2) of this section, and c=acid mist and SO_3 concentrations in lb./ft.³ as determined in accordance with paragraph (c)(1) of this section, corrected to standard conditions, dry basis.

APPENDIX—TEST METHODS

METHOD 1—SAMPLE AND VELOCITY TRAVERSES FOR STATIONARY SOURCES

1. *Principle and Applicability.*

1.1 Principle. A sampling site and the number of traverse points are selected to aid in the extraction of a representative sample.

1.2 Applicability. This method should be applied only when specified by the test procedures for determining compliance with the New Source Performance Standards. Unless otherwise specified, this method is not intended to apply to gas streams other than those emitted directly to the atmosphere without further processing.

2. *Procedure.*

2.1 Selection of a sampling site and minimum number of traverse points.

2.1.1 Select a sampling site that is at least eight stack or duct diameters downstream and two diameters upstream from any flow disturbance such as a bend, expansion, contraction, or visible flame. For rectangular cross section, determine an equivalent diameter from the following equation:

$$\text{equivalent diameter}=2\left(\frac{(\text{length})(\text{width})}{\text{length}+\text{width}}\right)$$

equation 1-1

2.1.2 When the above sampling site criteria can be met, the minimum number of traverse points is twelve (12).

2.1.3 Some sampling situations render the above sampling site criteria impractical. When this is the case, choose a convenient sampling location and use Figure 1-1 to determine the minimum number of traverse points. Under no conditions should a sampling point be selected within 1 inch of the stack wall. To obtain the number of traverse points for stacks or ducts with a diameter less than 2 feet, multiply the number of points obtained from Figure 1-1 by 0.67.

2.1.4 To use Figure 1-1 first measure the distance from the chosen sampling location to the nearest upstream and downstream disturbances. Determine the corresponding number of traverse points for each distance from Figure 1-1. Select the higher of the two numbers of traverse points, or a greater value, such that for circular stacks the number is a multiple of 4, and for rectangular stacks the number follows the criteria of section 2.2.2.

2.2 Cross-sectional layout and location of traverse points.

2.2.1 For circular stacks locate the traverse points on at least two diameters according to Figure 1-2 and Table 1-1. The traverse axes shall divide the stack cross section into equal parts.

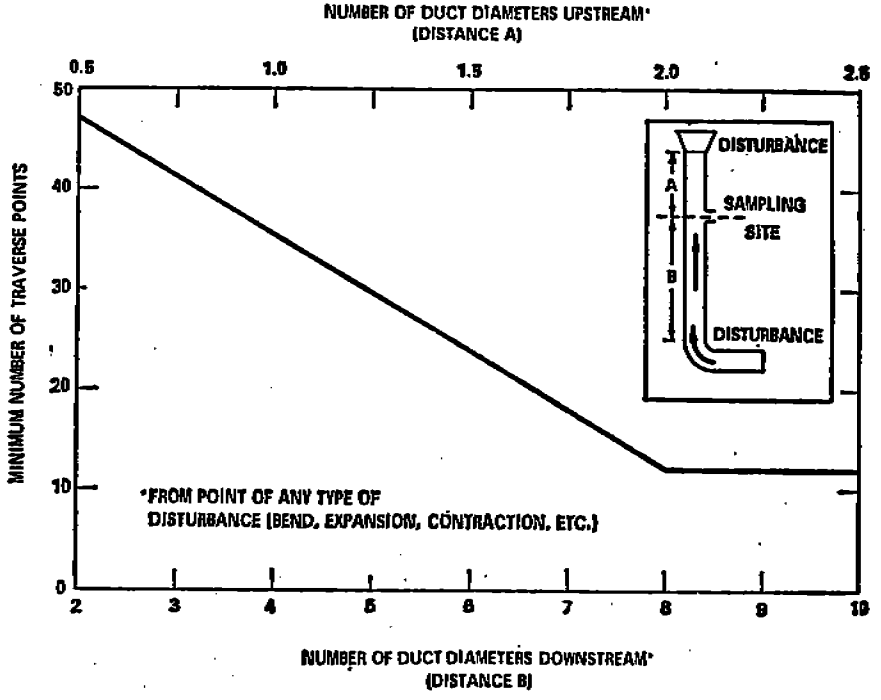

Figure 1-1. Minimum number of traverse points.

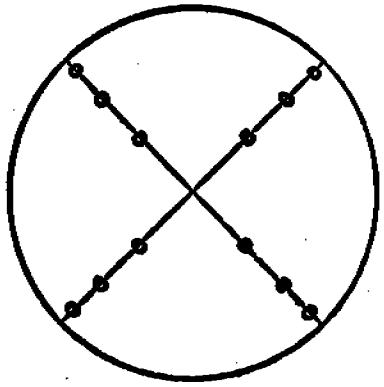

Figure 1-2. Cross section of circular stack divided into 12 equal areas, showing location of traverse points at centroid of each area.

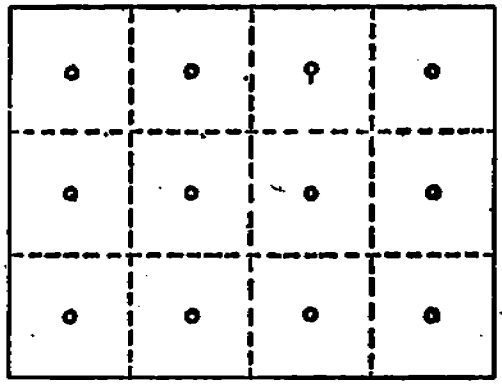

Figure 1-3. Cross section of rectangular stack divided into 12 equal areas, with traverse points at centroid of each area.

Table 1-1. Location of traverse points in circular stacks

(Percent of stack diameter from inside wall to traverse point)

Traverse point number on a diameter	Number of traverse points on a diameter											
	2	4	6	8	10	12	14	16	18	20	22	24
1	14.6	6.7	4.4	3.3	2.5	2.1	1.8	1.6	1.4	1.3	1.1	1.1
2	85.4	25.0	14.7	10.5	8.2	6.7	5.7	4.9	4.4	3.9	3.5	3.2
3		75.0	29.5	19.4	14.6	11.8	9.9	8.5	7.5	6.7	6.0	5.5
4		93.3	70.5	32.3	22.6	17.7	14.6	12.5	10.9	9.7	8.7	7.9
5			85.3	67.7	34.2	25.0	20.1	16.9	14.6	12.9	11.6	10.5
6			95.6	80.6	65.8	35.5	26.9	22.0	18.8	16.5	14.6	13.2
7				89.5	77.4	64.5	36.6	28.3	23.6	20.4	18.0	16.1
8				96.7	85.4	65.0	63.4	37.5	29.6	25.0	21.8	19.4
9					91.8	82.3	73.1	62.5	38.2	30.6	26.1	23.0
10					97.5	88.2	79.9	71.7	61.8	38.8	31.5	27.2
11						93.3	85.4	78.0	70.4	61.2	39.3	32.3
12						97.9	90.1	83.1	76.4	69.4	60.7	39.8
13							94.3	87.5	81.2	75.0	68.5	60.2
14							98.2	91.5	85.4	79.6	73.9	67.7
15								95.1	89.1	83.5	78.2	72.8
16								98.4	92.5	87.1	82.0	77.0
17									95.6	90.3	85.4	80.6
18									98.6	93.3	88.4	83.9
19										96.1	91.3	86.8
20										98.7	94.0	89.5
21											96.6	92.1
22											98.9	94.5
23												96.8
24												98.9

2.2.2 For rectangular stacks divide the cross section into as many equal rectangular areas as traverse points, such that the ratio of the length to the width of the elemental areas is between one and two. Locate the traverse points at the centroid of each equal area according to Figure 1–3.

3. *References.*

Determining Dust Concentration in a Gas Stream, ASME Performance Test Code #27, New York, N.Y., 1957.

Devorkin, Howard, et al., Air Pollution Source Testing Manual, Air Pollution Control District, Los Angeles, Calif. November 1963.

Methods for Determination of Velocity, Volume, Dust and Mist Content of Gases, Western Precipitation Division of Joy Manufacturing Co., Los Angeles, Calif. Bulletin WP–50, 1968.

Standard Method for Sampling Stacks for Particulate Matter, In: 1971 Book of ASTM Standards, Part 23, Philadelphia, Pa. 1971, ASTM Designation D–2928–71.

METHOD 2—DETERMINATION OF STACK GAS VELOCITY AND VOLUMETRIC FLOW RATE (TYPE S PITOT TUBE)

1. *Principle and applicability.*

1.1 Principle. Stack gas velocity is determined from the gas density and from measurement of the velocity head using a Type S (Stauscheibe or reverse type) pitot tube.

1.2 Applicability. This method should be applied only when specified by the test procedures for determining compliance with the New Source Performance Standards.

2. *Apparatus.*

2.1 Pitot tube—Type S (Figure 2–1), or equivalent, with a coefficient within ±5% over the working range.

2.2 Differential pressure gauge—Inclined manometer, or equivalent, to measure velocity head to within 10% of the minimum value.

2.3 Temperature gauge—Thermocouple or equivalent attached to the pitot tube to measure stack temperature to within 1.5% of the minimum absolute stack temperature.

2.4 Pressure gauge—Mercury-filled U-tube manometer, or equivalent, to measure stack pressure to within 0.1 in. Hg.

2.5 Barometer—To measure atmospheric pressure to within 0.1 in. Hg.

2.6 Gas analyzer—To analyze gas composition for determining molecular weight.

2.7 Pitot tube—Standard type, to calibrate Type S pitot tube.

3. *Procedure.*

3.1 Set up the apparatus as shown in Figure 2–1. Make sure all connections are tight and leak free. Measure the velocity head and temperature at the traverse points specified by Method 1.

3.2 Measure the static pressure in the stack.

3.3 Determine the stack gas molecular weight by gas analysis and appropriate calculations as indicated in Method 3.

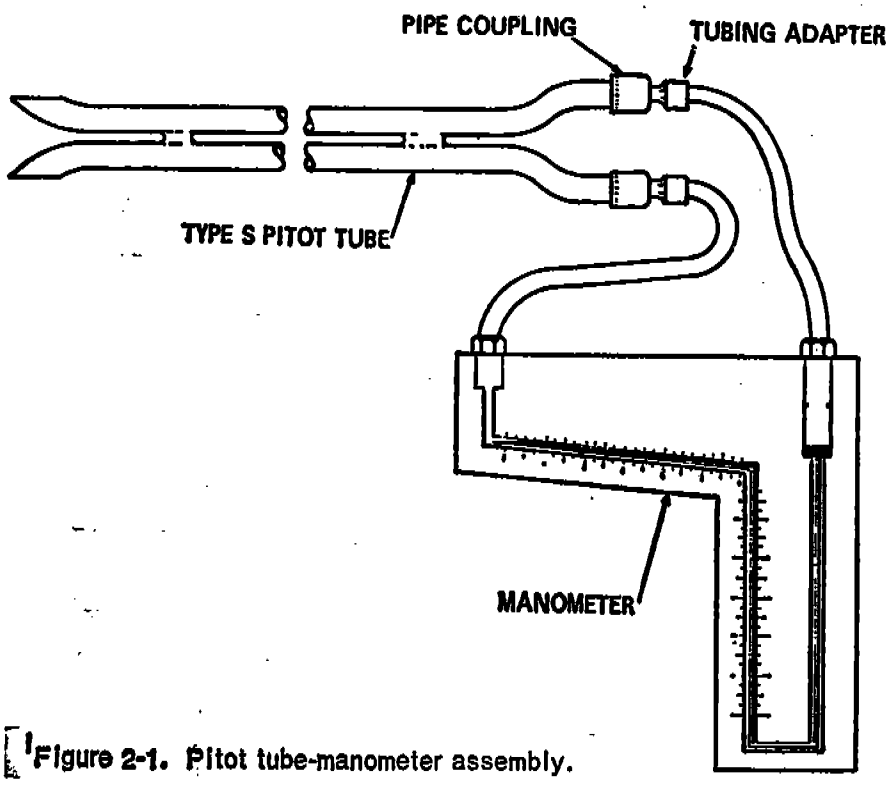

Figure 2-1. Pitot tube-manometer assembly.

4. *Calibration.*

4.1 To calibrate the pitot tube, measure the velocity head at some point in a flowing gas stream with both a Type S pitot tube and a standard type pitot tube with known coefficient. Calibration should be done in the laboratory and the velocity of the flowing gas stream should be varied over the normal working range. It is recommended that the calibration be repeated after use at each field site.

4.2 Calculate the pitot tube coefficient using equation 2–1.

$$C_{p_{test}} = C_{p_{std}} \sqrt{\frac{\Delta p_{std}}{\Delta p_{test}}} \quad \text{equation 2–1}$$

where:

$C_{p_{test}}$ = Pitot tube coefficient of Type S pitot tube.

$C_{p_{std}}$ = Pitot tube coefficient of standard type pitot tube (if unknown, use 0.99).

Δp_{std} = Velocity head measured by standard type pitot tube.

Δp_{test} = Velocity head measured by Type S pitot tube.

4.3 Compare the coefficients of the Type S pitot tube determined first with one leg and then the other pointed downstream. Use the pitot tube only if the two coefficients differ by no more than 0.01.

5. *Calculations.*

Use equation 2–2 to calculate the stack gas velocity.

$$(V_s)_{avg.} = K_p C_p (\sqrt{\Delta p})_{avg.} \sqrt{\frac{(T_s)_{avg.}}{P_s M_s}}$$

Equation 2–2

where:

$(V_s)_{avg.}$ = Stack gas velocity, feet per second (f.p.s.).

$K_p = 85.48 \frac{ft.}{sec.} \left(\frac{lb.}{lb.\ mole\text{-}°R}\right)^{1/2}$ when these units are used.

C_p = Pitot tube coefficient, dimensionless.

$(T_s)_{avg.}$ = Average absolute stack gas temperature, °R.

$(\sqrt{\Delta p})_{avg.}$ = Average velocity head of stack gas, inches H_2O (see Fig. 2–2).

P_s = Absolute stack gas pressure, inches Hg.

M_s = Molecular weight of stack gas (wet basis), lb./lb.-mole.

$M_s = M_d(1 - B_{wo}) + 18B_{wo}$

M_d = Dry molecular weight of stack gas (from Method 3).

B_{wo} = Proportion by volume of water vapor in the gas stream (from Method 4).

Figure 2–2 shows a sample recording sheet for velocity traverse data. Use the averages in the last two columns of Figure 2–2 to determine the average stack gas velocity from Equation 2–2.

Use Equation 2–3 to calculate the stack gas volumetric flow rate.

$$Q_s = 3600\ (1 - B_{wo})\ V_s A \left(\frac{T_{std}}{(T_s)_{avg.}}\right) \left(\frac{P_s}{P_{std}}\right)$$

Equation 2–3

where:

Q_s = Volumetric flow rate, dry basis, standard conditions, ft.³/hr.

A = Cross-sectional area of stack, ft.²

T_{std} = Absolute temperature at standard conditions, 530° R.

P_{std} = Absolute pressure at standard conditions, 29.92 inches Hg.

6. *References.*

Mark, L. S., Mechanical Engineers' Handbook, McGraw-Hill Book Co., Inc., New York, N.Y., 1951.

Perry, J. H., Chemical Engineers' Handbook, McGraw-Hill Book Co., Inc., New York, N.Y., 1960.

Shigehara, R. T., W. F. Todd, and W. S. Smith, Significance of Errors in Stack Sampling Measurements. Paper presented at the Annual Meeting of the Air Pollution Control Association, St. Louis, Mo., June 14–19, 1970.

Standard Method for Sampling Stacks for Particulate Matter, In: 1971 Book of ASTM Standards, Part 23, Philadelphia, Pa., 1971, ASTM Designation D–2928–71.

Vennard, J. K., Elementary Fluid Mechanics, John Wiley & Sons, Inc., New York, N.Y., 1947.

PLANT_____

DATE_____

RUN NO._____

STACK DIAMETER, in._____

BAROMETRIC PRESSURE, in. Hg._____

STATIC PRESSURE IN STACK (P_g), in. Hg._____

OPERATORS_____

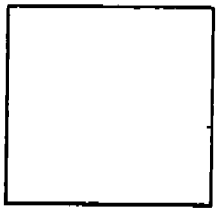

SCHEMATIC OF STACK CROSS SECTION

Traverse point number	Velocity head, in. H_2O	$\sqrt{\Delta_P}$	Stack Temperature (T_S), °F
AVERAGE:			

Figure 2-2. Velocity traverse data.

4.2 Gas volume.

$$V_{mc}=V_m\left(\frac{P_m}{P_{std}}\right)\left(\frac{T_{std}}{T_m}\right)=17.71\ \frac{^\circ R}{in.\ Hg}\left(\frac{V_m P_m}{T_m}\right) \quad \text{equation 4-2}$$

where:

V_{mc} = Dry gas volume through meter at standard conditions, cu. ft.
V_m = Dry gas volume measured by meter, cu. ft.
P_m = Barometric pressure at the dry gas meter, inches Hg.
P_{std} = Pressure at standard conditions, 29.92 inches Hg.
T_{std} = Absolute temperature at standard conditions, 530° R.
T_m = Absolute temperature at meter (°F + 460), °R.

4.3 Moisture content.

$$B_{wo}=\frac{V_{ws}}{V_{ws}+V_{mc}}+B_{wm}=\frac{V_{ws}}{V_{ws}+V_{mc}}+(0.025) \quad \text{equation 4-3}$$

where:

B_{wo} = Proportion by volume of water vapor in the gas stream, dimensionless.
V_{ws} = Volume of water vapor collected (standard conditions), cu. ft.
V_{mc} = Dry gas volume through meter (standard conditions), cu. ft.
B_{wm} = Approximate volumetric proportion of water vapor in the gas stream leaving the impingers, 0.025.

5. *References.*

Air Pollution Engineering Manual, Danielson, J. A. (ed.), U.S. DHEW, PHS, National Center for Air Pollution Control, Cincinnati, Ohio, PHS Publication No. 999-AP-40, 1967.

Devorkin, Howard, et al., Air Pollution Source Testing Manual, Air Pollution Control District, Los Angeles, Calif., November 1963.

Methods for Determination of Velocity, Volume, Dust and Mist Content of Gases, Western Precipitation Division of Joy Manufacturing Co., Los Angeles, Calif., Bulletin WP-50, 1968.

METHOD 5—DETERMINATION OF PARTICULATE EMISSIONS FROM STATIONARY SOURCES

1. *Principle and applicability.*

1.1 Principle. Particulate matter is withdrawn isokinetically from the source and its weight is determined gravimetrically after removal of uncombined water.

1.2 Applicability. This method is applicable for the determination of particulate emissions from stationary sources only when specified by the test procedures for determining compliance with New Source Performance Standards.

2. *Apparatus.*

2.1 Sampling train. The design specifications of the particulate sampling train used by EPA (Figure 5-1) are described in APTD-0581. Commercial models of this train are available.

2.1.1 Nozzle—Stainless steel (316) with sharp, tapered leading edge.

2.1.2 Probe—Pyrex [1] glass with a heating system capable of maintaining a minimum gas temperature of 250° F. at the exit end during sampling to prevent condensation from occurring. When length limitations (greater than about 8 ft.) are encountered at temperatures less than 600° F., Incoloy 825 [1], or equivalent, may be used. Probes for sampling gas streams at temperatures in excess of 600° F. must have been approved by the Administrator.

2.1.3 Pitot tube—Type S, or equivalent, attached to probe to monitor stack gas velocity.

2.1.4 Filter Holder—Pyrex [1] glass with heating system capable of maintaining minimum temperature of 225° F.

2.1.5 Impingers / Condenser—Four impingers connected in series with glass ball joint fittings. The first, third, and fourth impingers are of the Greenburg-Smith design, modified by replacing the tip with a ½-inch ID glass tube extending to one-half inch from the bottom of the flask. The second impinger is of the Greenburg-Smith design with the standard tip. A condenser may be used in place of the impingers provided that the moisture content of the stack gas can still be determined.

2.1.6 Metering system—Vacuum gauge, leak-free pump, thermometers capable of measuring temperature to within 5° F., dry gas meter with 2% accuracy, and related equipment, or equivalent, as required to maintain an isokinetic sampling rate and to determine sample volume.

2.1.7 Barometer—To measure atmospheric pressure to ±0.1 inches Hg.

2.2 Sample recovery.

2.2.1 Probe brush—At least as long as probe.

2.2.2 Glass wash bottles—Two.

2.2.3 Glass sample storage containers.

2.2.4 Graduated cylinder—250 ml.

2.3 Analysis.

2.3.1 Glass weighing dishes.

2.3.2 Desiccator.

2.3.3 Analytical balance—To measure to ±0.1 mg.

2.3.4 Trip balance—300 g. capacity, to measure to ±0.05 g.

3. *Reagents.*

3.1 Sampling.

3.1.1 Filters—Glass fiber, MSA 1106 BH [1], or equivalent, numbered for identification and preweighed.

3.1.2 Silica gel—Indicating type, 6-16 mesh, dried at 175° C. (350° F.) for 2 hours.

3.1.3 Water.

3.1.4 Crushed ice.

3.2 Sample recovery.

3.2.1 Acetone—Reagent grade.

3.3 Analysis.

3.3.1 Water.

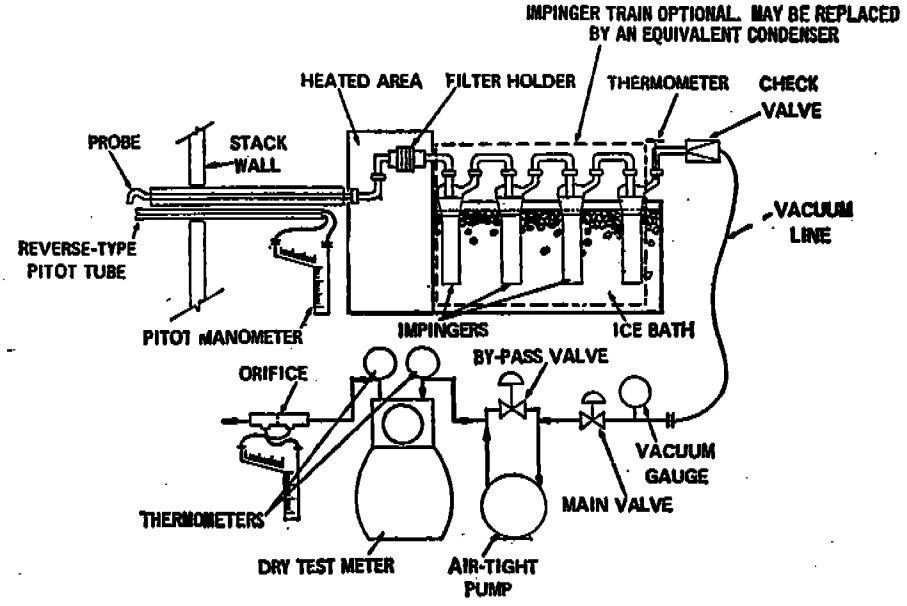

Figure 5-1. Particulate-sampling train.

3.3.2 Desiccant—Drierite, [1] indicating.

4. *Procedure.*

4.1 Sampling

4.1.1 After selecting the sampling site and the minimum number of sampling points, determine the stack pressure, temperature, moisture, and range of velocity head.

4.1.2 Preparation of collection train. Weigh to the nearest gram approximately 200 g. of silica gel. Label a filter of proper diameter, desiccate [2] for at least 24 hours and weigh to the nearest 0.5 mg. in a room where the relative humidity is less than 50%. Place 100 ml. of water in each of the first two impingers, leave the third impinger empty, and place approximately 200 g. of preweighed silica gel in the fourth impinger. Set up the train without the probe as in Figure 5-1. Leak check the sampling train at the sampling site by plugging up the inlet to the filter holder and pulling a 15 in. Hg vacuum. A leakage rate not in excess of 0.02 c.f.m. at a vacuum of 15 in. Hg is acceptable. Attach the probe and adjust the heater to provide a gas temperature of about 250° F. at the probe outlet. Turn on the filter heating system. Place crushed ice around the impingers. Add more ice during the run to keep the temperature of the gases leaving the last impinger as low as possible and preferably at 70° F., or less. Temperatures above 70° F. may result in damage to the dry gas meter from either moisture condensation or excessive heat.

4.1.3 Particulate train operation. For each run, record the data required on the example sheet shown in Figure 5-2. Take readings at each sampling point, at least every 5 minutes, and when significant changes in stack conditions necessitate additional adjustments in flow rate. To begin sampling, position the nozzle at the first traverse point with the tip pointing directly into the gas stream. Immediately start the pump and adjust the flow to isokinetic conditions. Sample for at least 5 minutes at each traverse point; sampling time must be the same for each point. Maintain isokinetic sampling throughout the sampling period. Nomographs are available which aid in the rapid adjustment of the sampling rate without other computations. APTD-0576 details the procedure for using these nomographs. Turn off the pump at the conclusion of each run and record the final readings. Remove the probe and nozzle from the stack and handle in accordance with the sample recovery process described in section 4.2.

[1] Trade name.

[2] Dry using Drierite [1] at 70° F. ± 10° F.

PLANT _____
LOCATION _____
OPERATOR _____
DATE _____
RUN NO. _____
SAMPLE BOX NO. _____
METER BOX NO. _____
METER $\Delta H_@$ _____
C FACTOR _____

SCHEMATIC OF STACK CROSS SECTION

AMBIENT TEMPERATURE _____
BAROMETRIC PRESSURE _____
ASSUMED MOISTURE, % _____
HEATER BOX SETTING _____
PROBE LENGTH, m. _____
NOZZLE DIAMETER, in. _____
PROBE HEATER SETTING _____

TRAVERSE POINT NUMBER	SAMPLING TIME (θ), min.	STATIC PRESSURE (P_g), in. Hg	STACK TEMPERATURE (T_s), °F	VELOCITY HEAD ($\sqrt{\Delta P}$),	PRESSURE DIFFERENTIAL ACROSS ORIFICE METER (ΔH), in. H_2O	GAS SAMPLE VOLUME (Vm), ft^3	GAS SAMPLE TEMPERATURE AT DRY GAS METER		SAMPLE BOX TEMPERATURE, °F	TEMPERATURE OF GAS LEAVING CONDENSER OR LAST IMPINGER, °F
							INLET ($T_{m_{in}}$), °F	OUTLET ($T_{m_{out}}$), °F		
TOTAL							Avg.	Avg.		
AVERAGE							Avg.			

Figure 5-2. Particulate field data.

4.2 Sample recovery. Exercise care in moving the collection train from the test site to the sample recovery area to minimize the loss of collected sample or the gain of extraneous particulate matter. Set aside a portion of the acetone used in the sample recovery as a blank for analysis. Measure the volume of water from the first three impingers, then discard. Place the samples in containers as follows:

Container No. 1. Remove the filter from its holder, place in this container, and seal.

Container No. 2. Place loose particulate matter and acetone washings from all sample-exposed surfaces prior to the filter in this container and seal. Use a razor blade, brush, or rubber policeman to lose adhering particles.

Container No. 3. Transfer the silica gel from the fourth impinger to the original container and seal. Use a rubber policeman as an aid in removing silica gel from the impinger.

4.3 Analysis. Record the data required on the example sheet shown in Figure 5-3. Handle each sample container as follows:

Container No. 1. Transfer the filter and any loose particulate matter from the sample container to a tared glass weighing dish, desiccate, and dry to a constant weight. Report results to the nearest 0.5 mg.

Container No. 2. Transfer the acetone washings to a tared beaker and evaporate to dryness at ambient temperature and pressure. Desiccate and dry to a constant weight. Report results to the nearest 0.5 mg.

Container No. 3. Weigh the spent silica gel and report to the nearest gram.

5. *Calibration.*

Use methods and equipment which have been approved by the Administrator to calibrate the orifice meter, pitot tube, dry gas meter, and probe heater. Recalibrate after each test series.

6. *Calculations.*

6.1 Average dry gas meter temperature and average orifice pressure drop. See data sheet (Figure 5-2).

6.2 Dry gas volume. Correct the sample volume measured by the dry gas meter to standard conditions (70° F., 29.92 inches Hg) by using Equation 5-1.

$$V_{m_{std}} = V_m\left(\frac{T_{std}}{T_m}\right)\left(\frac{P_{bar}+\frac{\Delta H}{13.6}}{P_{std}}\right) = \left(17.71\ \frac{°R}{in.\ Hg}\right)V_m\left(\frac{P_{bar}+\frac{\Delta H}{13.6}}{T_m}\right)$$

equation 5-1

where:

$V_{m_{std}}$ = Volume of gas sample through the dry gas meter (standard conditions), cu. ft.

V_m = Volume of gas sample through the dry gas meter (meter conditions), cu. ft.

T_{std} = Absolute temperature at standard conditions, 530° R.

T_m = Average dry gas meter temperature, °R.

P_{bar} = Barometric pressure at the orifice meter, inches Hg.

ΔH = Average pressure drop across the orifice meter, inches H_2O.

13.6 = Specific gravity of mercury.

P_{std} = Absolute pressure at standard conditions, 29.92 inches Hg.

6.3 Volume of water vapor.

$$V_{w_{std}} = V_{l_c}\left(\frac{\rho_{H_2O}}{M_{H_2O}}\right)\left(\frac{RT_{std}}{P_{std}}\right) = \left(0.0474\ \frac{cu.\ ft.}{ml.}\right)V_{l_c}$$

equation 5-2

where:

$V_{w_{std}}$ = Volume of water vapor in the gas sample (standard conditions), cu. ft.

V_{l_c} = Total volume of liquid collected in impingers and silica gel (see Figure 5-3), ml.

ρ_{H_2O} = Density of water, 1 g./ml.

M_{H_2O} = Molecular weight of water, 18 lb./lb.-mole.

R = Ideal gas constant, 21.83 inches Hg—cu. ft./lb.-mole-°R.

T_{std} = Absolute temperature at standard conditions, 530° R.

P_{std} = Absolute pressure at standard conditions, 29.92 inches Hg.

6.4 Moisture content.

$$B_{wo} = \frac{V_{w_{std}}}{V_{m_{std}} + V_{w_{std}}}$$

equation 5-3

where:

B_{wo} = Proportion by volume of water vapor in the gas stream, dimensionless.

$V_{w_{std}}$ = Volume of water in the gas sample (standard conditions), cu. ft.

$V_{m_{std}}$ = Volume of gas sample through the dry gas meter (standard conditions), cu. ft.

6.5 Total particulate weight. Determine the total particulate catch from the sum of the weights on the analysis data sheet (Figure 5-3).

6.6 Concentration.

6.6.1 Concentration in gr./s.c.f.

$$c'_s = \left(0.0154\frac{gr.}{mg.}\right)\left(\frac{M_n}{V_{m_{std}}}\right)$$

equation 5-4

where:

c'_s = Concentration of particulate matter in stack gas, gr./s.c.f., dry basis.

M_n = Total amount of particulate matter collected, mg.

$V_{m_{std}}$ = Volume of gas sample through dry gas meter (standard conditions), cu. ft.

PLANT _____

DATE _____

RUN NO. _____

CONTAINER NUMBER	WEIGHT OF PARTICULATE COLLECTED, mg		
	FINAL WEIGHT	TARE WEIGHT	WEIGHT GAIN
1			
2			
TOTAL			

	VOLUME OF LIQUID WATER COLLECTED		
	IMPINGER VOLUME, ml	SILICA GEL WEIGHT, g	
FINAL			
INITIAL			
LIQUID COLLECTED			
TOTAL VOLUME COLLECTED		g*	ml

CONVERT WEIGHT OF WATER TO VOLUME BY DIVIDING TOTAL WEIGHT INCREASE BY DENSITY OF WATER. (1 g. ml):

$$\frac{\text{INCREASE, g}}{(1\ \text{g/ml})} = \text{VOLUME WATER, ml}$$

Figure 5-3. Analytical data.

6.6.2 Concentration in lb./cu. ft.

$$c_s = \frac{\left(\frac{1}{453{,}600}\ \frac{\text{lb.}}{\text{mg.}}\right) M_n}{V_{m_{std}}} = 2.205 \times 10^{-6} \frac{M_n}{V_{m_{std}}} \qquad \text{equation 5-5}$$

where:

c_s = Concentration of particulate matter in stack gas, lb./s.c.f., dry basis.

453,600 = Mg/lb.

M_n = Total amount of particulate matter collected, mg.

$V_{m_{std}}$ = Volume of gas sample through dry gas meter (standard conditions), cu. ft.

6.7 Isokinetic variation.

$$I = \frac{T_s\left[\frac{V_{l_c}(\rho_{H_2O})R}{M_{H_2O}} + \frac{V_m}{T_m}\left(P_{bar} + \frac{\Delta H}{13.6}\right)\right]}{\theta V_s P_s A_n} \times 100$$

$$= \frac{\left(1.667\ \frac{\text{min.}}{\text{sec.}}\right)\left[\left(0.00267\ \frac{\text{in. Hg-cu. ft.}}{\text{ml.-°R}}\right) V_{l_c} + \frac{V_m}{T_m}\left(P_{bar} + \frac{\Delta H}{13.6}\right)\right]}{\theta V_s P_s A_n}$$

Equation 5-6

where:

I = Percent of isokinetic sampling.

V_{l_c} = Total volume of liquid collected in impingers and silica gel (See Fig. 5-3), ml.

ρ_{H_2O} = Density of water, 1 g./ml.

R = Ideal gas constant, 21.82 inches Hg-cu. ft./lb. mole-°R.

M_{H_2O} = Molecular weight of water, 18 lb./lb.-mole.

V_m = Volume of gas sample through the dry gas meter (meter conditions), cu. ft.

T_m = Absolute average dry gas meter temperature (see Figure 5-2), °R.

P_{bar} = Barometric pressure at sampling site, inches Hg.

ΔH = Average pressure drop across the orifice (see Fig. 5-2), inches H_2O.

T_s = Absolute average stack gas temperature (see Fig. 5-2), °R.

θ = Total sampling time, min.

V_s = Stack gas velocity calculated by Method 2, Equation 2-2, ft./sec.

P_s = Absolute stack gas pressure, inches Hg.

A_n = Cross-sectional area of nozzle, sq. ft.

6.8 Acceptable results. The following range sets the limit on acceptable isokinetic sampling results:

If $90\% \leq I \leq 110\%$, the results are acceptable, otherwise, reject the results and repeat the test.

7. *Reference.*

Addendum to Specifications for Incinerator Testing at Federal Facilities, PHS, NCAPC, Dec. 6, 1967.

Martin, Robert M., Construction Details of Isokinetic Source Sampling Equipment, Environmental Protection Agency, APTD-0581.

Rom, Jerome J., Maintenance, Calibration, and Operation of Isokinetic Source Sampling Equipment, Environmental Protection Agency, APTD-0576.

Smith, W. S., R. T. Shigehara, and W. F. Todd, A Method of Interpreting Stack Sampling Data, Paper presented at the 63d Annual Meeting of the Air Pollution Control Association, St. Louis, Mo., June 14-19, 1970.

Smith, W. S., et al., Stack Gas Sampling Improved and Simplified with New Equipment, APCA paper No. 67-119, 1967.

Specifications for Incinerator Testing at Federal Facilities, PHS, NCAPC, 1967.

METHOD 6—DETERMINATION OF SULFUR DIOXIDE EMISSIONS FROM STATIONARY SOURCES

1. *Principle and applicability.*

1.1 Principle. A gas sample is extracted from the sampling point in the stack. The acid mist, including sulfur trioxide, is separated from the sulfur dioxide. The sulfur dioxide fraction is measured by the barium-thorin titration method.

1.2 Applicability. This method is applicable for the determination of sulfur dioxide emissions from stationary sources only when specified by the test procedures for determining compliance with New Source Performance Standards.

2. *Apparatus.*

2.1 Sampling. See Figure 6-1.

2.1.1 Probe—Pyrex[1] glass, approximately 5 to 6 mm. ID, with a heating system to prevent condensation and a filtering medium to remove particulate matter including sulfuric acid mist.

2.1.2 Midget bubbler—One, with glass wool packed in top to prevent sulfuric acid mist carryover.

2.1.3 Glass wool.

2.1.4 Midget impingers—Three.

2.1.5 Drying tube—Packed with 6 to 16 mesh indicating-type silica gel, or equivalent, to dry the sample.

2.1.6 Valve—Needle valve, or equivalent, to adjust flow rate.

2.1.7 Pump—Leak-free, vacuum type.

2.1.8 Rate meter—Rotameter or equivalent, to measure a 0-10 s.c.f.h. flow range.

2.1.9 Dry gas meter—Sufficiently accurate to measure the sample volume within 1%.

2.1.10 Pitot tube—Type S, or equivalent,

[1] Trade names.

APPENDIX D

LABORATORY REPORT

D.1 ON-SITE HANDLING AND TRANSFER, PARTICULATE

After the completion of a test run, the probe and nozzle were disconnected from the impinger train and all open ends sealed immediately to avoid contamination. At the motel, the nozzle was disconnected from the probe and very carefully washed with acetone, using a fine bristled brush. All acetone washings were collected in a clean glass jar, the jar itself being placed on a large piece of clean aluminum foil. The probe was then washed using a long handled brush rotated through it under a continuous stream of acetone. The brush was also carefully cleaned, and all washings collected in the glass jar. The probe was finally checked visually for any residue.

The impinger train was initially wiped clean on the outside and all glassware connectors, including the filter, removed carefully and all exposed surfaces wiped clean. All the connectors were placed on a piece of aluminum foil ready for washing. The first three impingers were then analyzed for water collection by transferring the water through the outlet port into the graduated cylinder and noting the volume. The impingers were not dismantled and all transfers and washings were performed through the inlet and outlet ports. All of the glassware in the back half of the filter, up to the fourth impinger was then carefully washed with distilled water and the washings collected. This was followed by an acetone wash which was again collected in a separate jar.

Acetone washings from the glassware in the front half of the filter were collected in the same jar as the probe and nozzle wash. The filter was carefully removed from the holder and placed in a plastic dish which was then sealed with tape. Silica gel in the fourth impinger was weighed in a previously tared glass jar using a triple-beam balance.

All acetone jars had Teflon lined lids. The following designations were used for labeling the containers:

Container #1: Filter

Container #2: Acetone wash front half from filter

Container #3: Water wash back half from filter

Container #4: Silica gel

Container #5: Acetone wash back half from filter

E.2 LABORATORY HANDLING AND ANALYSIS, PARTICULATE

E.2.1 Filter Transfer

Clean plastic dishes were desiccated for 24 hours, labeled and tared on an electronic balance. The filter containers were unsealed and desiccated for 24 hours before carefully transferring the filters to the tared dishes using a fine pair of tweezers. Care was taken to place a piece of aluminum foil under the transfer operation. A "Staticmaster" brush was used to brush any fine particles adhering to the container or foil. All transfers were performed near the balance and the weight reported to the nearest 0.1 mg. The plastic dishes were then sealed for shipment.

E.2.2 Acetone Washes

The 250 ml. beakers to be used for the acetone wash transfers were leached for 24 hours in 50% nitric acid, washed thoroughly and oven dried overnight. These were then desiccated for 24 hours and tared. Once tared, the beakers were sealed with "parafilm" and handled with tongs or "Kimwipes".

The jars containing the acetone washes were left loosely covered in a hood until the acetone was evaporated. Once the acetone was evaporated, the glass jar was rinsed with acetone, using a rubber policeman, and the washings collected in the tared beaker. When the acetone wash of the front half contained considerable particulate matter, the dried particulate cake was transferred carefully with a spatula into the tared beaker along with the final acetone rinse.

After the acetone had evaporated, the beakers were desiccated for 24 hours and weighed to a constant weight. Where water was present in the acetone wash, it was evaporated in an over at 90°C after the acetone had all evaporated.

E.2.3 Water Washes

The level of water in the collection bottles was marked for later volume measurement. Each water wash was then transferred into a 2000 ml. separatory funnel and extracted three times with 25 ml. portions of chloroform. Often, where a large volume of water was collected (above 500 ml.) a fourth extraction was used. The chloroform extracts were collected directly in a tared beaker prepared in the same manner as described in the previous section.

Extraction with three 50 ml. portions of ether followed, collecting the water portion in the original jars. The ether extracts were combined with the chloroform extracts. These were then washed with distilled water in the separatory funnel and returned to the tared beaker for evaporation.

The water portion was transferred to tared beakers, oven dried at 90°C, dessicated, and weighed. All beakers were "parafilm" sealed for shipment. The Project Officer requested that particle size analysis not be performed. A summary of weight measurements is shown in Tables D-1.

TABLE D-1 SUMMARY OF WEIGHT MEASUREMENTS

	Run #1					Run #2					Run #3				
	Gross (g)	Tare (g)	Net (mg)	Blank (mg)	Final (mg)	Gross (g)	Tare (g)	Net (mg)	Blank (mg)	Final (mg)	Gross (g)	Tare (g)	Net (mg)	Blank (mg)	Final (mg)
Container #1 (Filter)	1.8640	1.8337	30.3	0	30.3	1.8010	1.7730	28.0	0	28.0	1.8125	1.7740	38.5	0	38.5
Container #2 (Acetone wash front half)	95.3605	95.3035	57.0	6.5	50.5	95.1635	95.0770	86.5	7.0	79.5	92.5020	92.4300	72.0	2.5	69.5
Container #3a (Organic extract)	93.3875	93.3845	3.0	0.0	3.0	94.0620	94.0610	1.0	0.0	1.0	95.1435	95.1365	7.0	0.0	7.0
Container #3b (Water after extraction)	96.6080	96.6070	1.0	1.0	0	92.0779	92.0770	.0009	1.0	0	93.7590	93.7565	1.5	1.0	0.5
Container #5	94.6040	94.5980	6.0	2.5	3.5	92.5945	92.5885	6.0	1.5	4.5	96.2680	96.2575	10.5	1.5	9.0
Probe, cyclone, filter (mg)					80.8	Probe, cyclone, filter (mg)				107.5	Probe, cyclone, filter (mg)				108.0
Total (mg)					87.3	Total (mg)				113.0	Total (mg)				124.5

SRL 1281 25 1172

APPENDIX E

TEST LOG

The Scott team arrived at the Bishop plant of Consolidation Coal Company in Bishop, West Virginia on Tuesday, October 24, 1972. Sample boxes for two tests had been prepared at the motel site before going to the plant. One unit was set up for a test. Preliminary velocity and temperature traverses were not performed and the previous test data was used. Figure E-1 summarizes the test program.

The first test was started at 1310 and was completed at 1516. All sample clean up and collection was conducted at the motel.

On Wednesday, October 25, 1972 the Scott team arrived at the plant and set the equipment in place for the test. The second test was started at 0939. The test was stopped immediately and restarted at 0946. At the end of the first traverse at 1046 the test was stopped until a pump motor in the coal cleaning equipment was changed. The test was continued at 1215 and was completed at 1315.

The equipment was moved aside and the second sampling train was put in place for the start of the third test which was started at 1333. The test had to be stopped at 1500 because the coal supply was exhausted. The equipment was left in place for continuation of the test the next morning. The samples from test #2 were taken to the motel for transfer and equipment clean-up.

On Thursday, October 26, 1972 test #3 was continued at 0857 and was completed at 0941 without incident. The test equipment was dismantled and loaded. The transfer of samples and clean-up was performed at the motel. Upon completion the Scott team travelled home.

FIGURE E-1 SUMMARY OF TEST PROGRAM

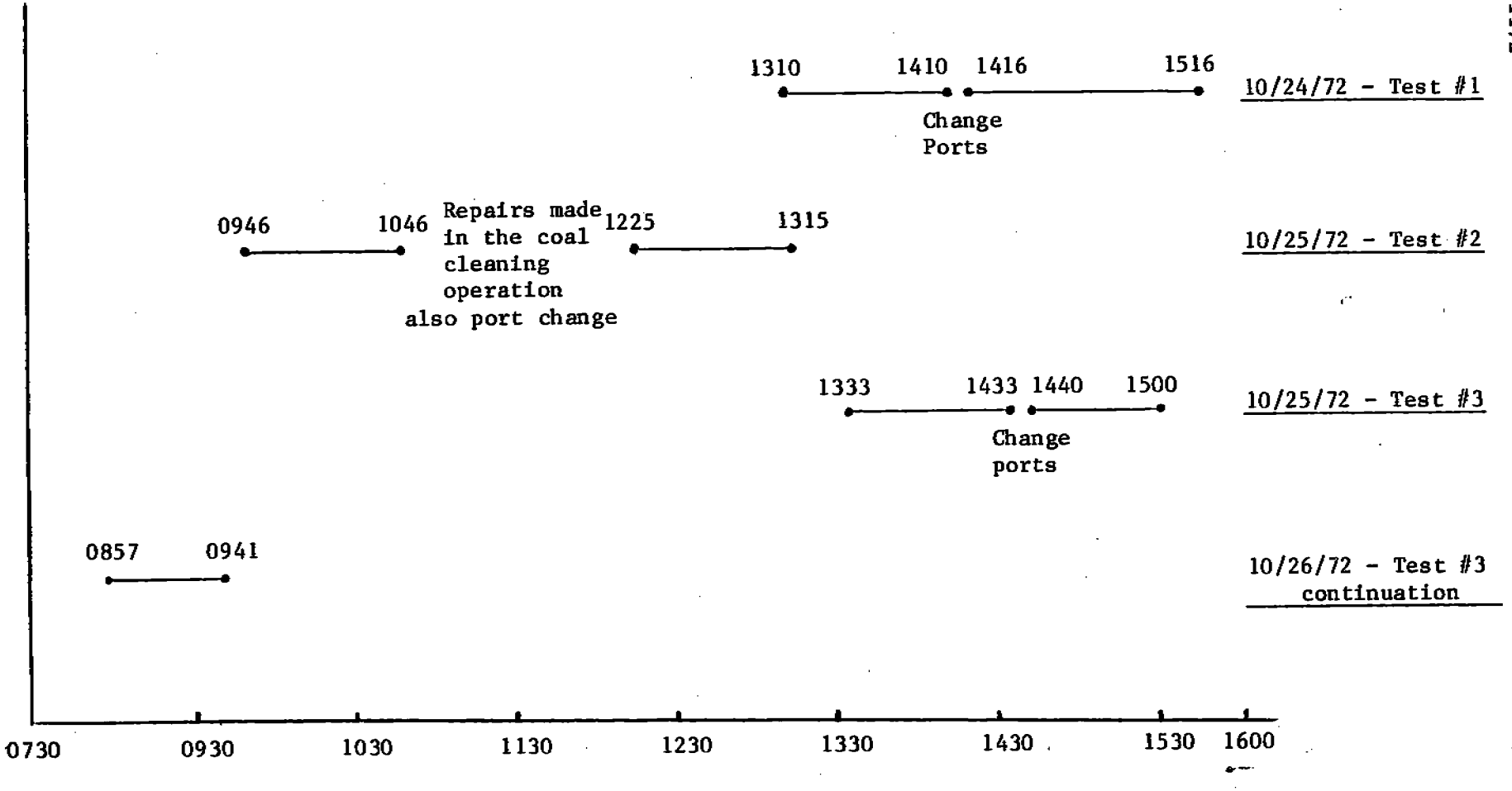

SRL 1281 25 1172

APPENDIX F

RELATED REPORTS

This report is actually a continuation of Scott Research Laboratories, Inc. report "Coal Preparation Plant Emission Tests", Test No. 1281-25, Consolidation Coal Company, Bishop, West Virginia.

APPENDIX G

PROJECT PARTICIPANTS AND TITLES

The personnel taking part in this project include:

Thomas Ward	Project Officer - EPA
Charles Sedman	Project Engineer - EPA
Norman R. Troxel	Senior Engineer - SRL
Joseph Wilson	Field Team Leader - SRL
Jyotin Sachdev	Engineer - SRL
John Trump	Technician - SRL
Margaret Husic	Chemist - SRL
Louis R. Reckner	Manager, Atmospheric Chemistry & Industrial Emissions Department - SRL