Note: This is a reference cited in *AP 42, Compilation of Air Pollutant Emission Factors, Volume I Stationary Point and Area Sources.* AP42 is located on the EPA web site at www.epa.gov/ttn/chief/ap42/

The file name refers to the reference number, the AP42 chapter and section. The file name "ref02_c01s02.pdf" would mean the reference is from AP42 chapter 1 section 2. The reference may be from a previous version of the section and no longer cited. The primary source should always be checked.

TABLE OF CONTENTS

Part 1: Report of Results

		Page Number
I.	INTRODUCTION	1
II.	SUMMARY AND DISCUSSION OF RESULTS	2
	Table I - Particulate Summary	3
	Table II - Particulate Summary (Metric)	4
	Table III - Particle Sizing	5
III.	PROCESS DESCRIPTION	6-9
	Figure 1 - Lignite Drying Process Schematic	7
	Figure 2 - Roto-Louvre Dryer	9
IV.	LOCATION OF SAMPLING POINTS	10-11
	Figure 3 - Diagram of Traverse Points	11
V.	SAMPLING AND ANALYTICAL PROCEDURES	12
	Figure 4 - Brinks Impactor Sampling Train	13

I. INTRODUCTION

Under the Clean Air Act, as amended, the Environmental Protection Agency is given the responsibility of establishing performance standards for stationary sources that contribute significantly to air pollution. A performance standard is established using the best emission reduction systems which have been shown to be operable and economically feasible.

In order that realistic performance standards can be set, accurate data on pollutant emissions must be gathered from the stationary source under consideration. The Bureau of Mines' Energy Research Laboratory's coal drying pilot plant in Grand Forks, North Dakota was considered a well-controlled stationary source in the coal preparation industry and was, therefore, selected by the Office of Air Quality Planning and Standards (OAQPS) for the emission testing program.

The emission testing was conducted at the outlet of a cyclone which served as an emission reduction system for the coal drying plant. This site was sampled to determine particulate emissions and particle size distribution. The sampling was conducted by personnel from PEDCo Environmental Specialists and the Environmental Protection Agency on April 2-4, 1973.

II. SUMMARY AND DISCUSSION OF RESULTS

Three particulate runs and two particle sizing runs were made at the outlet of the cyclone.

The process was stable and the plant was operating at full capacity during all runs.

For the particulate runs, the front half catch ranged from 3.98 lbs/ton to 4.29 lbs/ton with an average of 4.17 lbs/ton. The total catch ranged from 4.06 lbs/ton to 4.41 lbs/ton with an average of 4.27 lbs/ton (see Tables I & II).

The results of the two particle sizing runs may be found in Table III. The discrepancy between the two runs is probably due to problems encountered in shipping the samples and the fact that glass wool used before the filter in Run 2 was not able to be weighed. For more complete discussion and results, see Appendix H.

Particulate Summary

Run Number	1	2	3	Average
Date	4-3-73	4-4-73	4-4-73	
Volume of Gas Sampled - DSCF[a]	88.8	95.34	96.118	93.42
Percent Moisture by Volume	6.15	6.41	6.47	6.34
Average Stack Temperature - °F	163	162	162	162.3
Stack Volumetric Flow Rate - DSCFM[b]	666	671	675	671
Stack Volumetric Flow Rate - ACFM[c]	858	866	872	865
Percent Isokinetic	95.43	101.73	99.77	98.98
Percent Excess Air				
Percent Opacity				
Feed Rate - ton/hr	.261	.261	.261	.261
Particulates - probe, cyclone, and filter catch				
mg	1003.7	1009.3	1061.1	1024.7
gr/DSCF	0.194	0.181	0.194	0.190
gr/ACF	0.150	0.140	0.150	0.147
lb/hr	1.11	1.04	1.12	1.09
lb/ton feed	4.25	3.98	4.29	4.17
Particulates - total catch				
mg	1024.5	1023.2	1088.1	1045.3
gr/DSCF	0.198	0.184	0.199	0.194
gr/ACF	0.154	0.142	0.154	0.150
lb/hr	1.13	1.06	1.15	1.11
lb/ton feed	4.33	4.06	4.41	4.27
Percent impinger catch	2.0%	1.4%	2.5%	1.97%

[a] Dry standard cubic feet at 70°F, 29.92 in. Hg.

[b] Dry standard cubic feet per minute at 70°F, 29.92 in. Hg.

[c] Actual cubic feet per minute

TABLE II

Particulate Summary
(Metric System)

Run Number	1	2	3	Average
Date	4-3-73	4-4-73	4-4-73	
Volume of Gas Sampled - Nm^3 (a)	2.33	2.51	2.53	2.46
Percent Moisture by Volume	6.15	6.41	6.47	6.34
Average Stack Temperature - °C	122.	122.	122.	122.
Stack Volumetric Flow Rate - Nm^3/min. (b)	15.86	15.98	16.07	15.98
Stack Volumetric Flow Rate - m^3/min. (c)	24.30	24.52	24.69	24.50
Percent Isokinetic	95.43	101.73	99.77	98.98
Percent Excess Air				
Percent Opacity				
Feed Rate - Mton/hr	0.236	0.236	0.236	0.236
Particulates - probe, cyclone, and filter catch				
mg	1003.7	1009.3	1061.1	1024.7
mg/Nm^3	444.	414.	444.	435.
mg/m^3	343.3	320.4	343.3	335.7
kg/hr	0.503	0.472	0.508	0.494
kg/Mton	2.13	1.99	2.15	2.09
Particulates - total catch				
mg	1024.5	1023.2	1088.1	1045.3
mg/Nm^3	453.	421.	455.	444.
mg/m^3	352.4	324.9	352.4	343.23
kg/hr	0.513	0.481	0.522	0.505
kg/Mton	2.17	2.03	2.21	2.14
Percent impinger catch	2.0%	1.4%	2.5%	1.97%

[a] Dry normal cubic meter at 21.1°C, 760mm Hg.

[b] Dry normal cubic meters per minute at 21.1°C, 760mm Hg.

[c] Actual cubic meters per minute

Particle Sizing

SUMMARY OF RESULTS

TABLE III

STAGE	D_{p50} (microns)	Weight Percent Run 2	Weight Percent Run 3	Weight Percent Ave.	Cumulative Percent Less Than D_p Run 2	Cumulative Percent Less Than D_p Run 3	Cumulative Percent Less Than D_p Ave.
1	2.3	28.4	12.0	20.2	71.6	88.0	79.8
2	1.3	16.4	5.3	10.9	55.2	82.7	68.9
3	0.9	16.4	20.0	18.2	38.8	62.7	50.7
4	0.4	17.9	18.7	18.3	20.9	44.0	32.4
5	0.25	14.9	28.0	21.4	6.0	16.0	11.0
Filter		6.0	16.0	11.0			
Total		100	100	100			

III. PROCESS DESCRIPTION

Figure 1 illustrates the lignite drying process being demonstrated by the U.S. Bureau of Mines Grand Forks Energy Research Labs on a pilot scale. Heat is furnished by burning metered natural gas and the combustion gases diluted with excess air to cool them to 1000°F. The gases flow through the dryer under the action of an induced draft fan located between the dryer and cyclone dust collector. Coal is fed volumetrically from a bin through a screen type feeder and the dried coal exiting from the dryer enters a sealed receiver and is augered into a collection barrel.

Exit gases pass through the dry cyclone dust collector and exit from the laboratory via a horizontal 8" stack constructed of stovepipe. Sampling ports are located on a straight vertical section of stack, 6 to 8 diameters above the cyclone and 2 diameters below the 90° elbow shown in Figure 1. The cyclone bottoms feed through a cloth chute into an enclosed drum.

The roto-louvre dryer is a double shell dryer, the inner shell consisting of overlapping louvres as illustrated in Figure 2. Heat, supplied as combustion gases, should not exceed 1000°F when dryer construction is of steel.

The material being dried is gently tumbled (not lifted) and cascaded down through the drying gases. The gases enter between the outer shell and louvres only under the bed of material and pass upward through the material being dried. The bed being dried is thinner at the entrance where moisture content and bulk density is higher, resulting in a uniform air flow throughout the length of the dryer. The result is low degradation of friable materials and less dust carryover than in most moving bed dryers.

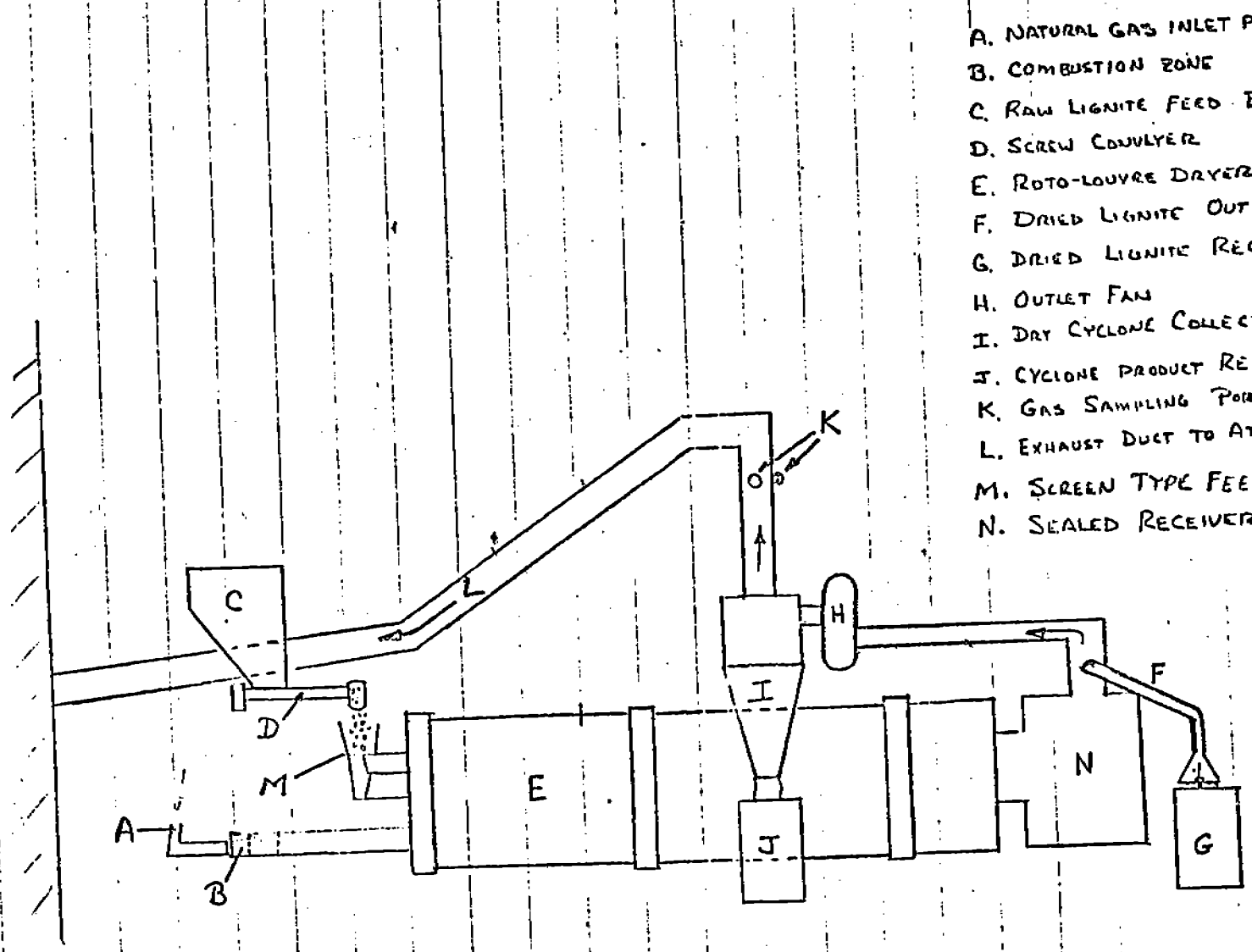

A. NATURAL GAS INLET PIPE
B. COMBUSTION ZONE
C. RAW LIGNITE FEED BIN
D. SCREW CONVEYER
E. ROTO-LOUVRE DRYER
F. DRIED LIGNITE OUT
G. DRIED LIGNITE RECEIVING DRUM
H. OUTLET FAN
I. DRY CYCLONE COLLECTOR
J. CYCLONE PRODUCT RECEIVING DRUM
K. GAS SAMPLING PORTS
L. EXHAUST DUCT TO ATMOSPHERE
M. SCREEN TYPE FEEDER
N. SEALED RECEIVER

FIGURE 1. LIGNITE DRYING PROCESS SCHEMATIC

This particular dryer is a 31" I.D. x 10' long, Lunk-Belt Roto-louvre dryer of 1500 cfm air flow capacity. The laboratory engineers state that the dryer is large enough to provide data on operating characteristics, but because of the thinner bed than that in larger diameter dryers, it uses more heat per ton of water evaporated.

FIGURE 2. ROTO-LOUVRE DRYER

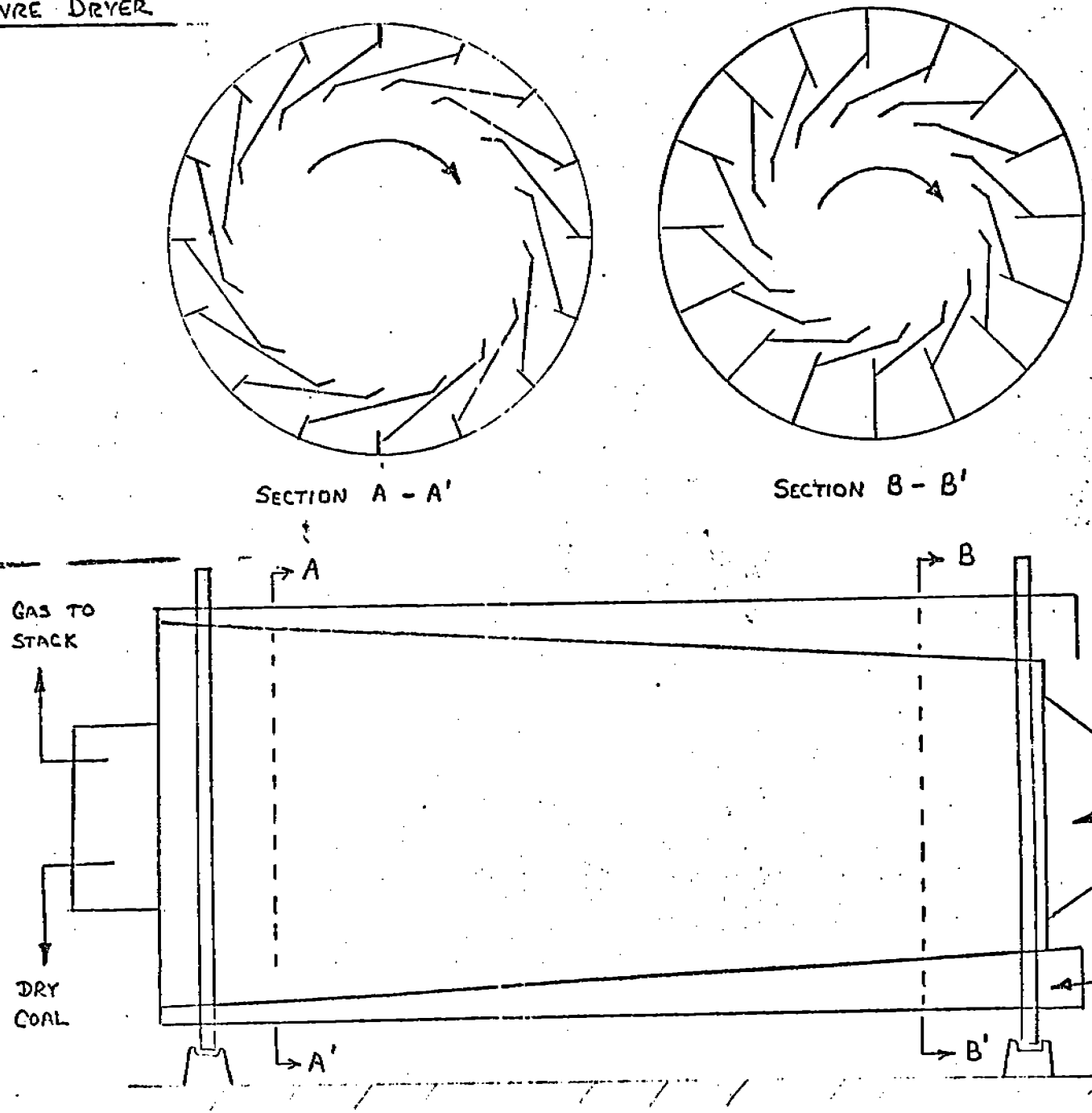

IV. LOCATION OF SAMPLING POINTS

The stack at the outlet of the cyclone had an inner diameter of 7 3/4". The sampling ports were located 8.4 D (66") from the nearest upstream disturbance (cyclone) and 3.5 D (27") from the nearest downstream disturbance (bend).

Using Method 1 of the December 23, 1971, Federal Register, it was determined to use four (4) points per traverse.

The particle sizing was conducted at only 1 point. The point used was point B-2 (see Figure 3) due to the fact that the stack velocity at this point was approximately the average stack velocity.

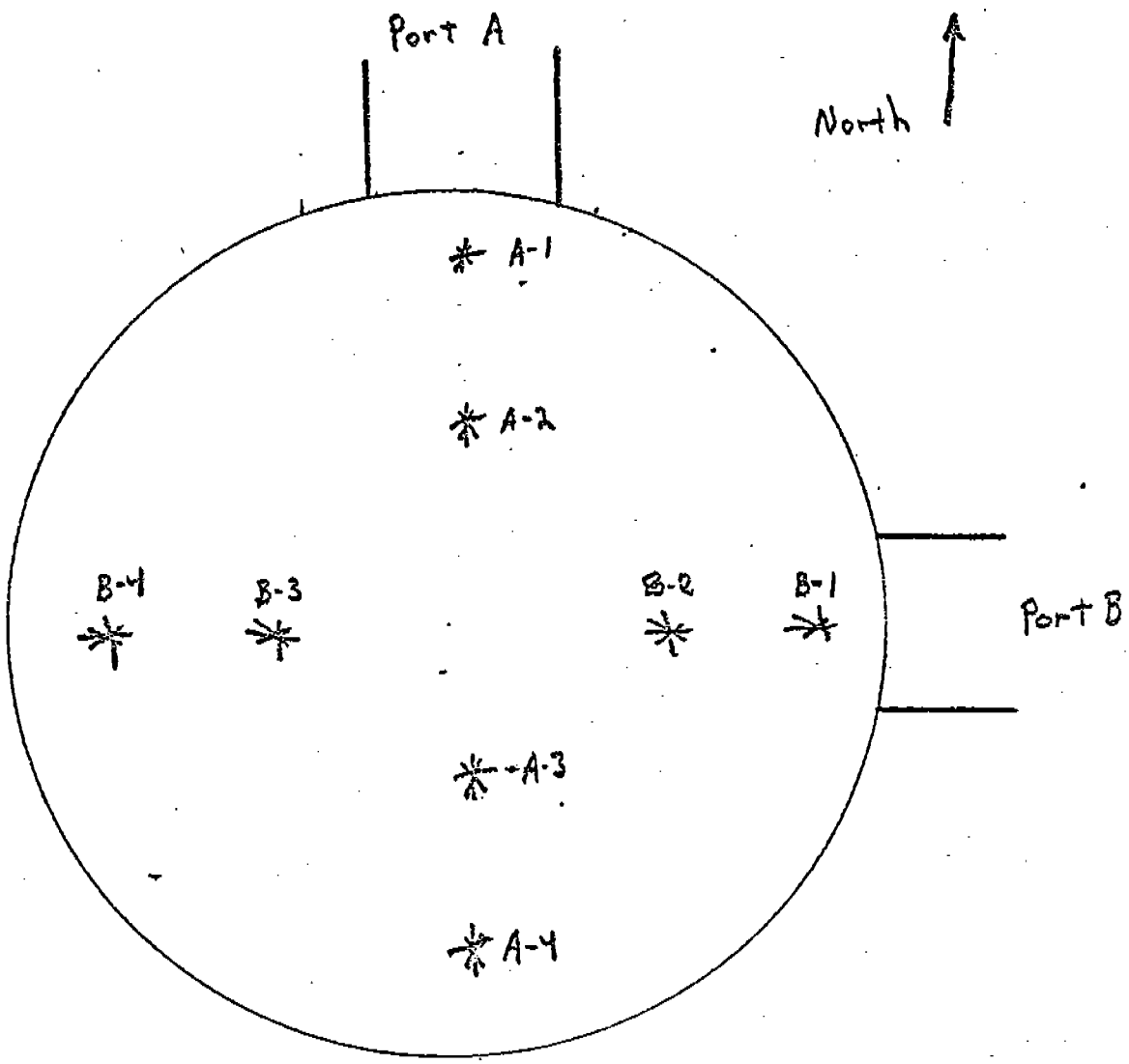

Fig. 3 Diagram of Traverse Points

V. SAMPLING AND ANALYTICAL PROCEDURES

Particulate samples at the outlet of the cyclone were collected using Method 5 of the December 23, 1971, Federal Register. Also, an Orsat grab sample was collected according to Method 3.

The procedure for analyzing is described in Method 5 of the August 17, 1971, Federal Register. Also included in this procedure is the evaporation, desiccation, and weighing of the water residue from container Number 3.

Particle sizing was conducted anisokinetically at one point in the stack. A Brinks impactor was heated and placed in the stack (see Figure 4). Three runs were performed, the first of which was aborted due to an equipment malfunction. All particle sizing was performed by the Environmental Protection Agency, Emission Measurement Branch, Field Testing Section.

Run Number 1 was aborted after 17 seconds due to plugging in the Brinks equipment. In run Number 2, glass wool was placed before the filter to prevent plugging and aluminum inserts which had been used in run Number 1 were not used. In run Number 3, the glass wool was not used since the plugging seemed due to the slippage of the aluminum inserts rather than an overloaded filter.

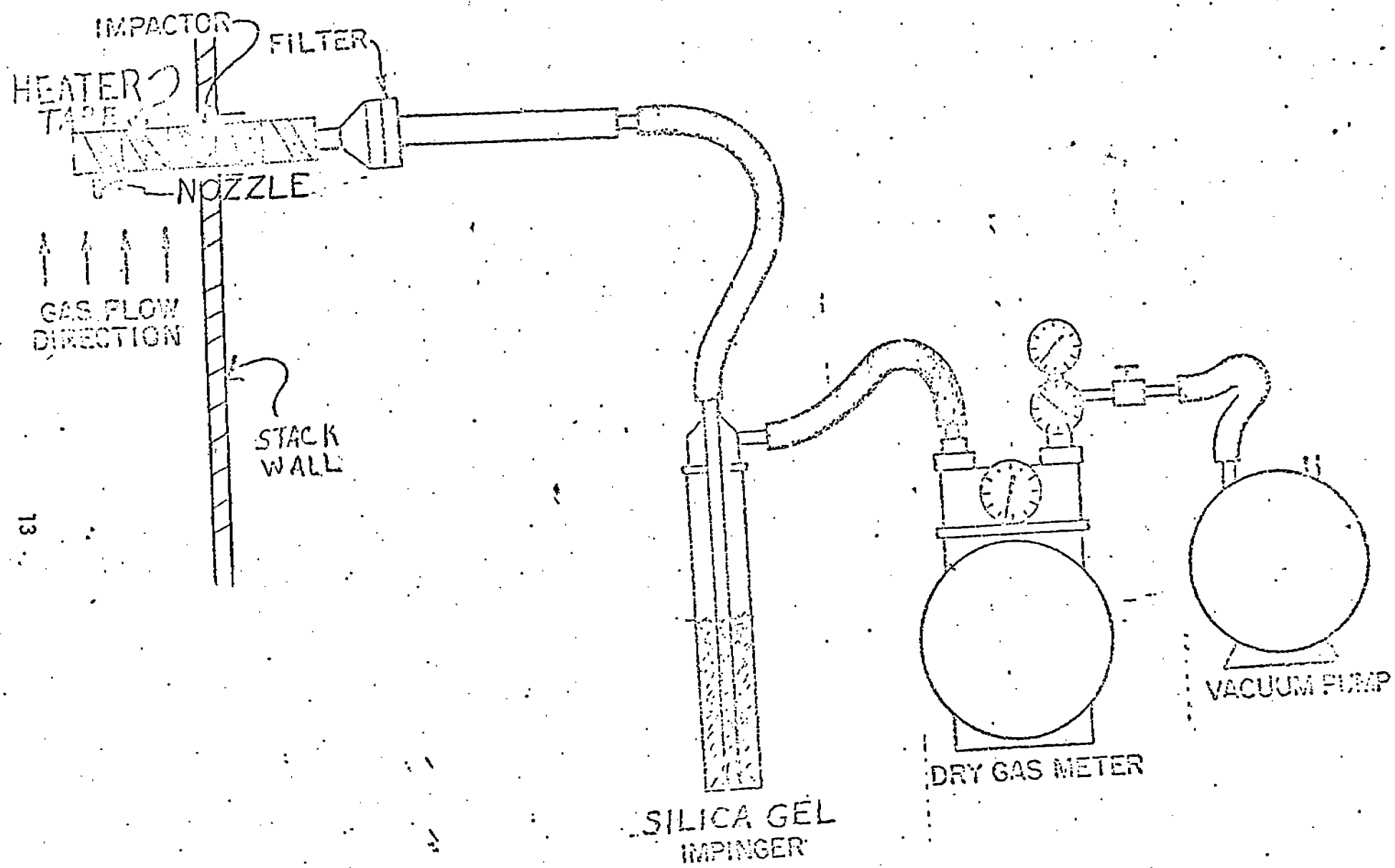

Figure 4. Brinks Impactor Sampling Train

Emission Testing Report
EMB Project No. 73-CCl-5

B U R E A U O F M I N E S
Grand Forks, North Dakota

Part 2: Appendices

by

Carl D. Bell

Environmental Protection Agency
Office of Air Quality Planning and Standards
Research Triangle Park, North Carolina 27711

Table of Contents

Part 2: Appendices

Appendix	Page Numbers
Appendix A - Particulate Results	1-4
Appendix B - Sample Calculations	5-9
Appendix C - Field Calculations	10-13
Appendix D - Field Data Sheets	14-32
Appendix E - Laboratory Report	33-34
Appendix F - Test Log	35-36
Appendix G - Project Participants	37-38
Appendix H - Particle Size Distribution	39-46

APPENDIX A

Particulate Results

APPENDIX A
Particulate Results

Run No.		1	2	3
Test Date		4-3-73	4-4-73	4-4-73
Sampling Time, 24 hour clock		12:06-14:16	9:03-11:10	11:58-14:07
D_n	Sampling Nozzle Diameter, in.	0.25	0.25	0.25
T_t	Net Time of Test, Min.	120	120	120
P_b	Barometric Pressure, in. Hg Absolute	28.78	28.76	28.76
P_m	Average Orifice Pressure Drop, in. H_2O	1.37	1.56	1.58
V_m	Volume of Dry Gas Sampled at Meter Conditions, DCF	88.8	95.35	96.118
T_m	Average Gas Meter Temperature, °F	109.79	108.19	120.1
$V_{m_{std}}$	Volume of Dry Gas Sampled at Standard Conditions[a], DSCF	79.6	85.48	84.35
V_w	Total H_2O Collected in Impingers and Silica Gel, ml	110.1	123.6	123.1
$V_{w_{gas}}$	Volume of Water Vapor Collected at Standard Conditions[b], SCF	5.2	5.86	5.83
% M	% Moisture in Stack Gas, by Volume	6.15	6.41	6.47
M_d	Mole Fraction of Dry Gas	0.9385	0.936	0.935
% CO_2	Volume % Dry	0.9	0.9	0.9
% O_2	Volume % Dry	20.33	20.33	20.33
% CO	Volume % Dry	1.97	1.97	1.97
% N_2	Volume % Dry	77.7	77.7	77.7
% EA	Percent Excess Air			
MW_d	Molecular Weight of Stack Gas, Dry Basis	29.24	29.21	29.21

APPENDIX A

Run No.		1	2	3
MW	Molecular Weight of Stack Gas, Wet Basis	28.55	28.49	28.48
C_p	Pitot Tube Coefficient	0.83	0.83	0.83
T_s	Average Stack Temperature °F	163	162	162
N_p	Net Sampling Points	8	8	8
P_{st}	Static Pressure of Stack Gas, in. Hg	0.3	0.3	0.3
P_s	Stack Gas Pressure, in. Hg Absolute	29.08	29.06	29.06
V_s	Stack Gas Velocity at Stack Conditions, fpm	2620	2644	2663
A_s	Stack Area, in.^{2}	47.17	47.17	47.17
Q_s	Dry Stack Gas Volumetric Flow Rate at Standard Conditions,[c] DSCFM	666	671	675
Q_a	Stack Gas Volumetric Flow Rate at Stack Conditions, ACFM	858	877	872
% I	Percent Isokinetic	95.43	101.73	99.77
% O	Percent Opacity			
T_c	Unit Feed Rate-ton/hr	0.261	0.261	0.261
m_f	Particulate - Probe, Cyclone, and Filter, mg	1003.7	1009.3	1061.1
m_t	Particulate - Total, mg	1024.5	1023.2	1088.1
I_c	% Impinger Catch	2.0	1.4	2.5
C_{an}	Particulate - Probe, Cyclone, and Filter, gr/SCF	0.194	0.181	0.194
C_{ao}	Particulate - Total, gr/SCF	0.198	0.184	0.199

APPENDIX A

Run No.		1	2	3
C_{at}	Particulate - Probe, Cyclone, and Filter, gr/ACF	0.150	0.140	0.150
C_{au}	Particulate - Total, gr/ACF	0.154	0.142	0.154
C_{aw}	Particulate - Probe, Cyclone, and Filter, lb/hr.	1.11	1.04	1.12
C_{ax}	Particulate - Total, lb/hr.	1.13	1.06	1.15
P_{tf}	Particulate - Probe, Cyclone, and Filter, lb/ton feed	4.25	3.98	4.29
P_{tt}	Particulate - Total, lb/ton feed	4.33	4.06	4.41

[a] Dry standard cubic feet at 70°F, 29.92 in. Hg.

[b] Standard conditions at 70°F, 29.92 in. Hg.

[c] Dry standard cubic feet per minute at 70°F, 29.92 in. Hg.

APPENDIX B

Sample Calculations

APPENDIX B
Sample Calculations
Run #1

1. Volume of dry gas sampled at standard conditions[a], DSCF

$$V_{m_{std}} = \frac{17.7 \times V_m \left(P_b + \frac{P_m}{13.6}\right)}{(T_m + 460)} = \frac{17.7 \times 88.8 \left(28.78 + \frac{1.37}{13.6}\right)}{(109.79 + 460)} = 79.6 \text{ DSCF}$$

2. Volume of water vapor at standard conditions[b], SCF

$$V_{w_{gas}} = 0.0474 \times V_w = 0.0474 \times 110.1 = 5.2 \quad \text{SCF}$$

3. Percent moisture in stack gas

$$\% M = \frac{100 \times V_{w_{gas}}}{V_{m_{std}} + V_{w_{gas}}} = \frac{100 \times 5.2}{79.6 + 5.2} = 6.15$$

4. Mole fraction of dry gas

$$M_d = \frac{100 - \% M}{100} = \frac{100 - 6.15}{100} = 0.9385$$

5. Molecular weight of dry stack gas

$$MW_d = (\%CO_2 \times \frac{44}{100}) + (\%O_2 \times \frac{32}{100}) + \left[(\%CO + \%N_2) \times \frac{28}{100}\right] =$$

$$(0.9 \times \frac{44}{100}) + (20.33 \times \frac{32}{100}) + (79.67 \times \frac{28}{100}) = 29.24$$

APPENDIX B

6. Molecular weight of wet stack gas

$$MW = MW_d \times M_d + 18\ (1 - M_d) = 29.24 \times 0.9385 + 18\ (1 - 0.9385) = 28.55$$

7. Stack gas velocity at stack conditions, fpm[c]

$$V_s = 4{,}360 \times \sqrt{\Delta P_s \times (T_s + 460)} \left[\frac{1}{P_s \times MW}\right]^{1/2} =$$

$$4{,}360 \times 17.73 \left[\frac{1}{29.08 \times 28.55}\right]^{1/2} = 2620 \text{ fpm}$$

8. Stack gas volumetric flow rate at standard conditions[d], DSCFM

$$Q_s = \frac{0.123 \times V_s \times A_s \times M_d \times P_s}{(T_s + 460)} = \frac{0.123 \times 2620 \times 47.17 \times 0.9385 \times 29.08}{163 + 460} = 666 \text{ DSCFM}$$

9. Stack gas volumetric flow rate at stack conditions, ACFM

$$Q_a = \frac{.05645 \times Q_s\ (T_s + 460)}{P_s \times M_d} = \frac{.05645 \times 666 \times (163 + 460)}{29.08 \times 0.9385} = 858 \text{ ACFM}$$

10. Percent isokinetic

$$\%I = \frac{1{,}032 \times (T_s + 460) \times V_{m_{std}}}{V_s \times T_t \times P_s \times M_d \times (D_n)^2} = \frac{1{,}032 \times (163 + 460) \times 79.6}{2620 \times 120 \times 29.08 \times 0.9385 \times (0.25)^2} = 95.43$$

11. Particulate - probe, cyclone, and filter, gr/DSCF

$$C_{an} = 0.0154 \times \frac{m_f}{V_{m_{std}}} = 0.0154 \times \frac{1003.7}{79.6} = 0.194 \text{ gr/DSCF}$$

12. Particulate - total, gr/DSCF

$$C_{ao} = 0.0154 \times \frac{m_t}{V_{m_{std}}} = 0.0154 \times \frac{1024.5}{79.6} = 0.198 \text{ gr/DSCF}$$

13. Particulate - probe, cyclone, and filter at stack conditions, gr/ACF

$$C_{at} = \frac{17.7 \times C_{an} \times P_s \times M_d}{(T_s + 460)} = \frac{17.7 \times 0.194 \times 29.08 \times 0.9385}{(163 + 460)} = .150 \text{ gr/ACF}$$

14. Particulate - total at stack conditions, gr/ACF

$$C_{aw} = \frac{17.7 \times C_{ao} \times P_s \times M_d}{(T_s + 460)} = \frac{17.7 \times 0.198 \times 29.08 \times 0.9385}{(163 + 460)} = .154 \text{ gr/ACF}$$

15. Particulate - probe, cyclone, and filter, lb/hr

$$C_{aw} = 0.00857 \times C_{an} \times Q_s = 0.00857 \times 0.194 \times 666 = 1.11 \text{ lb/hr}$$

16. Particulate - total, lb/hr

$$C_{ax} = 0.00857 \times C_{ao} \times Q_s = 0.00857 \times 0.198 \times 666 = 1.13 \text{ lb/hr}$$

17. Particulate - probe, cyclone, and filter, lb/ton feed

$$P_{tf} = \frac{C_{aw}}{T_c} = \frac{1.11}{0.261} = 4.25 \text{ lb/ton feed}$$

18. Particulate - total, lb/ton feed

$$P_{tt} = \frac{C_{ax}}{T_c} = \frac{1.13}{0.261} = 4.33 \text{ lb/ton feed}$$

---

[a] Dry standard cubic feet at 70°F, 29.92 in. Hg.

[b] Standard conditions at 70°F, 29.92 in. Hg.

[c] $\sqrt{\Delta P_s \times (T_s + 460)}$ is determined by averaging the square root of the product of the velocity head (ΔPs) and the absolute stack temperature from each sampling point.

[d] Dry standard cubic feet per minute at 70°F, 29.92 in. Hg.

APPENDIX C

Field Calculations

Appendix C
Field Calculations

PLANT Bureau of Mines

ADDRESS Grand Forks, N. D.

SAMPLING LOCATION Outlet - cyclone

Report No. 73-CCE-5

	CLR	
	ΔH_1	1st set
	↑	
	Tm_{in_1}	
	↑	
	Tm_{out_1}	
	+	
	x⇄y	
	ΔH_2	
CLR	+	
ΔH_1	x⇄y	2nd, ..., nth set
+	Tm_{in_2}	
ΔH_2	+	
+	Tm_{out_2}	
(etc)	+	
	x⇄y	
n	n	
STO	STO	
÷	÷	$\overline{\Delta H}$
	x⇄y	
Tm_{in_1}		
↑		
Tm_{out_1}		
+		
Tm_{in_2}		
+		
Tm_{out_2}		
+		
(etc)		
RCL (n)		
↑		
+		
÷		$\overline{Tm}$ °F
460		
+		$\overline{Tm}$ °R
x⇄y		
13.6		
÷		
P_b		P_b
+		
17.7		
x		
Vm		Vm
x		
x⇄y		
÷		Vm_{std}
	Vm_{std}	*
	↑	
0.0474		
↑		

Vw		Vw
x		Vw_{gas}
STO		
+		
RCL (Vw_{gas})		
100		
STO		
x		
x⇄y		
÷		%M
CHS		
RCL (100)		
+		
RCL (100)		
÷		Md
% CO_2		$\%CO_2$
↑		
44		
x		
% O_2		$\%O_2$
↑		
32		
x		
+		
%CO + % N_2		%CO
↑		
28		
x		
+		
100		
÷		MWd
	Md	*
	↑	
	MWd	
x		
x⇄y		
CHS		
↑		
1		
+		
18		
x		
+		MW
	460	1st set
	STO	
	Ts_1	
	RCL(460)	
	+	
	↑	
	↑	
	ΔP_1	

	x	
	√	
	x⇄y	
	Ts_2	
	RCL(460)	
	+	
	↑	
	↓	
	+	
	↓	
	↓	
CLR	↓	
Ts_1	ΔP_2	2nd, ..., nth set
+	x	
Ts_2	√	
+	↑	
(etc)	↓	
	↓	
460	↓	
↑	+	
n	↓	
STO	↓	
x	↓	
+	n	
RCL(n)	STO	
÷	÷	$\overline{Ts}$ °R
√		
ΔP_1		
√		
↑		
ΔP_2		
√		
+		
(etc)		
x	↓	
RCL(n)	RCL(n)	
÷	÷	$\sqrt{\Delta P Ts}$ Factor
$\sqrt{\Delta P Ts}$ Factor		*
↑		
5128.8		
↑		
Cp		Cp
x		
x		
1		
↑		
Ps		Ps
√		
MW		
√		

x		
÷		
x		Vs
	Vs	*
	↑	
0.123		
↑		
As		
x		
x		
Md		
↑		
Ps		
x		
STO (Md × Ps)		
x		
$\overline{Ts}$ °R		
÷		Qs
	Qs	*
	↑	
0.05645		
↑		
$\overline{Ts}$ °R		
x		
x		
RCL (Md × Ps)		
÷		Qa
1032		
↑		
$\overline{Ts}$ °R		
x		
Vm std		
x		
Vs		
÷		
Tt		Tt
÷		
RCL (Md × Ps)		
÷		
Dn		Dn
↑		
x		
÷		%I

Run No.	1	2	3
Date	4-3-73	4-4-73	4-4-73
$\overline{\Delta H}$	[illegible]	1.56	1.58
$\overline{Tm}$ °F	109.79	108.19	120.1
$\overline{Tm}$ °R		568.19	580.1
P_b	28.75	28.76	28.76
Vm	[illegible]	95.34	96.118
Vm_{std}	79.6	85.48	84.35
Vw	110.1	123.6	123.1
Vw_{gas}	5.2	3.86	5.83
%M	6.15	6.41	6.47
Md	0.9385	0.936	0.935
$\%CO_2$	0.9	0.9	0.9
$\%O_2$	20.33	20.33	20.33
%CO	1.97	1.97	1.97
MW_d	29.24	29.21	29.21
MW	28.55	28.49	28.48
$\overline{Ts}$ °R	[illegible]	622	622
$\sqrt{\Delta P Ts}$ Factor	17.73	17.87	18.00
Cp	.83	.83	.83
Ps	29.08	29.06	29.06
Vs	2620	2644	2663
Qs	666	671	675
Qa	858	866	872
Tt	120	120	120
Dn	.25	.25	.25
%I	95.43	101.73	99.77

*Insert only if you are not continuing from previous step.

Appendix C
Field Calculations

PLANT Bureau of Mines

ADDRESS Grand Forks, N.D.

SAMPLING LOCATION Cyclone Outlet

REPORT NO. 73-CCL-5

RUN No.	1	2	3
DATE	4/3/73	4/4/73	4/4/73
m_f	1003.7	1009.3	1061.1
$gr/DSCF_f$	0.194	0.181	0.194
m_t	1098.5	1023.2	1088.1
$gr/DSCF_t$	0.198	0.184	0.199
gr/ACF_f	0.150	.140	0.150
gr/ACF_t	0.154	.142	0.154
lb/hr_f	1.11	1.04	1.12
lb/hr_t	1.13	1.06	1.15
tons/hr	.261	.261	.261
lb/ton feed$_f$	4.250	3.98	4.29
lb/ton feed$_t$	4.33	4.06	4.41

0.0154
↑
$V_{m_{std}}$
÷
STO
↑
m_f | m_f
X | $gr/DSCF_f$
RCL
0.0154
↑
$V_{m_{std}}$
÷
*
m_t | m_t
X | $gr/DSCF_t$
17.7
↑
P_s
↑
M_d
↑
$\bar{T}_s$ °R
÷
X
STO
↑
$gr/DSCF_f$
X | gr/ACF_f
RCL
17.7
↑
P_s
↑
M_d
↑
$\bar{T}_s$ °R
÷
X
X
*
$gr/DSCF_t$
X | gr/ACF_t
0.00857
↑
Q_s
X
STO
↑
$gr/DSCF_f$
X | lb/hr_f

RCL
0.00857
↑
Q_s
X
*
$gr/DSCF_t$
X | lb/hr_t
lb/hr_f
↑
tons/hr | tons/hr
STO
÷ | lb/ton feed$_f$
RCL
tons/hr
↑
*
lb/hr_t
÷ | lb/ton feed$_t$

*INSERT ONLY IF YOU ARE NOT CONTINUING FROM PREVIOUS STEP

APPENDIX D

Field Data Sheets

PRELIMINARY VELOCITY TRAVERSE

PLANT U.S. BUREAU OF MINES
DATE 4-3-73
LOCATION DRYER OUTLET
STACK I.D. AVG 7 3/4"
BAROMETRIC PRESSURE, in. Hg 28.78
STACK GAUGE PRESSURE, in. H_2O + 0.3
OPERATORS F. MEADOWS - E. MEER

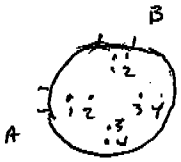

SCHEMATIC OF TRAVERSE POINT LAYOUT

TRAVERSE POINT NUMBER	VELOCITY HEAD (Δp_s), in. H_2O	STACK TEMPERATURE (T_s), °F	$\sqrt{\Delta P}$
A-1	0.29	163	.539
A-2	0.35	163	.592
A-3	0.58	163	.762
A-4	0.72	163	.849
B-1	0.62	163	.787
B-2	0.55	163	.742
B-3	0.41	163	.640
B-4	0.46	163	.678
AVERAGE	$\sqrt{0.699}$ = 0.70	163	

0.49

TRAVERSE POINT NUMBER	VELOCITY HEAD (Δp_s), in. H_2O	STACK TEMPERATURE (T_s), °F
AVERAGE		

EPA (Dur) 233
4/72

PEDCo-ENVIRONMENTAL
SUITE 8 • ATKINSON SQUARE
CINCINNATI, OHIO 45246
513/771-4330

NOMOGRAPH DATA

PLANT U.S. BUREAU OF MINES

DATE 4-3-73

SAMPLING LOCATION DRYER - OUTLET

CALIBRATED PRESSURE DIFFERENTIAL ACROSS ORIFICE, in. H_2O	$\Delta H_@$	1.51
AVERAGE METER TEMPERATURE (AMBIENT + 20 °F), °F	$T_{m_{avg.}}$	95
PERCENT MOISTURE IN GAS STREAM BY VOLUME	B_{wo}	
BAROMETRIC PRESSURE AT METER, in. Hg	P_m	28.78
STATIC PRESSURE IN STACK, in. Hg ($P_m \pm 0.073$ x STACK GAUGE PRESSURE in in. H_2O) 0.30	P_s	28.80
RATIO OF STATIC PRESSURE TO METER PRESSURE	P_s/P_m	$\frac{28.80}{28.78} = 1$
AVERAGE STACK TEMPERATURE, °F	$T_{s_{avg.}}$	163
AVERAGE VELOCITY HEAD, in. H_2O	$\Delta p_{avg.}$	0.49 ~~0.70~~
MAXIMUM VELOCITY HEAD, in. H_2O	$\Delta p_{max.}$	0.72
C FACTOR	0.77	
CALCULATED NOZZLE DIAMETER, in.	0.250	
ACTUAL NOZZLE DIAMETER, in.	0.250	
REFERENCE Δp, in. H_2O	0.70	

	PLANT & CITY	DATE	SAMPLING LOCATION	SAMPLE TYPE
1.	U.S. BUREAU OF MINES - GRAND FORKS, N. D.	4/3/73	DRYER - OUTLET	PARTICULATE

	RUN NO.	OPERATOR	AMB. TEMP (°F)	BAR. PRESS (IN.HG)	STATIC PRESS. (IN.H_2O)	FILTER NUMBER(S)	STACK INSIDE DIMEN. (INCHES)	PITOT TUBE Cp
2.	1	F. MEADOWS - E. MEER	70	28.78	+3.0	200021	75.0 x 75.0	0.83

	PROBE LENGTH AND TYPE	NOZZLE I. D. INCHES	H_2O (%)	SAMPLE BOX NO.	METER BOX NO.	METER ΔH @	C FACTOR	PROBE HEAT SET	BOX HEAT SET.	REF. ΔP	RECORD DATA MINS.
3.	3' PYREX HEATED	0.250	10.0	6	5	1.51	0.77	250	250	0.70	5.0

EMISSION TESTING FIELD DATA

TRAVERSE POINT NUMBER	SAMPLING TIME, min	CLOCK TIME (24 hr CLOCK)	GAS METER READING (V_m), ft^3	VELOCITY HEAD (Δp_s), in.H_2O	ORIFICE PRESSURE DIFFERENTIAL (ΔH), in.H_2O DESIRED	ORIFICE PRESSURE DIFFERENTIAL (ΔH), in.H_2O ACTUAL	STACK TEMPERATURE (T_s), °F	DRY GAS METER TEMPERATURE INLET ($T_{m_{in}}$), °F	DRY GAS METER TEMPERATURE OUTLET ($T_{m_{out}}$), °F	PUMP VACUUM, in.Hg	SAMPLE BOX TEMPERATURE °F	IMPINGER TEMPERATURE °F
	0	1206	179.647									
A-4	5.0	1211	184.442	0.92	2.40	2.40	163	84	76	7.0	220	53
A-4	10.0	1216	189.308	0.93	2.40	2.40	163	96	76	7.0	225	57
A-4	15.0	1221	194.100	0.85	2.20	2.20	163	106	79	7.0	220	60
A-3	20.0	1226	198.130	0.62	1.60	1.60	163	111	81	5.5	240	61
A-3	25.0	1231	202.072	0.62	1.60	1.60	163	116	84	5.5	245	64
A-3	30.0	1236	206.079	0.62	1.60	1.60	163	120	87	5.5	245	65
A-2	35.0	1241	209.221	0.34	0.92	0.92	163	121	90	4.0	245	65
A-2	40.0	1246	212.275	0.34	0.92	0.92	163	122	92	4.0	240	64
A-2	45.0	1251	215.330	0.34	0.92	0.92	163	124	95	4.0	235	63
A-1	50.0	1256	218.052	0.27	~~0.77~~ 0.71	0.71	163	124	97	3.5	230	61
A-1	55.0	1301	220.754	0.27	0.71	0.71	163	125	99	3.5	225	60
A-1	60.0	1306	223.466	0.27	0.71	0.71	163	127	101	3.5	225	60
	.	1316	223.466	.	.	.				.		
B-4	65.0	1321	227.487	0.58	1.55	1.55	163	120	101	6.5	250	61
B-4	70.0	1326	231.487	0.58	1.55	1.55	163	124	102	6.5	230	61
B-4	75.0	1331	235.440	0.58	1.55	1.55	163	128	102	6.5	230	62
B-3	80.0	1336	239.206	0.50	1.35	1.35	163	131	103	6.0	230	65
B-3	85.0	1341	242.928	0.50	1.35	1.35	163	132	104	6.0	235	65
B-3	90.0	1346	246.620	0.50	1.35	1.35	163	133	105	6.0	235	65
B-2	96.0	1352	250.925	~~0.50~~ 0.46	1.20 ~~1.35~~	1.20 ~~1.35~~	163	134	106	6.0	245	64
B-2	100.0	1356	253.800	0.46	1.20	1.20	163	134	107	6.0	245	64
B-2	105.0	1401	257.341	0.46	1.20	1.20	163	134	107	6.0	245	64

CONTINUED ON FOLLOWING PAGE.

LEAKAGE @ 16 "Hg = .018 CFM

GAS METER COR. ___

PEDCo - ENVIRONMENTAL
SUITE 8 • ATKINSON SQUARE
CINCINNATI, OHIO 45246

	PLANT & CITY	DATE	SAMPLING LOCATION	SAMPLE TYPE
1.	U.S. BUREAU OF MINES - GRAND FORKS, N.D.	4/3/73	DRYER-OUTLET	PARTICULATE

	RUN NO.	OPERATOR	AMB. TEMP (°F)	BAR. PRESS (IN.HG)	STATIC PRESS. (IN.H_2O)	FILTER NUMBER(S)	STACK INSIDE DIMEN. (INCHES)	PITOT TUBE C
2.	1	F. MEADOWS - E. MEER	70	28.78	+3.0	200021	75.0 X 75.0	0.83

	PROBE LENGTH AND TYPE	NOZZLE I. D. INCHES	H_2O (%)	SAMPLE BOX NO.	METER BOX NO.	METER ΔH @	C FACTOR	PROBE HEAT SET	BOX HEAT SET.	REF. ΔP	RECORD DATA MINS.
3.	3' PYREX - HEATED	0.250	11.0	6	5	1.51	0.77	250	250	0.70	5.0

EMISSION TESTING FIELD DATA

7-10 TRAVERSE POINT NUMBER	11-14 SAMPLING TIME, min	15-18 CLOCK TIME (24 hr CLOCK)	19-24 GAS METER READING (V_m), ft^3	25-29 VELOCITY HEAD (Δp_s), in.H_2O	30-37 ORIFICE PRESSURE DIFFERENTIAL (ΔH), in.H_2O DESIRED	ACTUAL	38-41 STACK TEMPERATURE (T_s), °F	42-47 DRY GAS METER TEMPERATURE INLET ($T_{m_{in}}$), °F	OUTLET ($T_{m_{out}}$), °F	48-51 PUMP VACUUM, in.Hg	52-54 SAMPLE BOX TEMPERATURE °F	55-57 IMPINGER TEMPERATURE °F
	0	1401	257.341									
B-1	110.0	1406	261.018	0.49	1.30	1.30	163	135	107	7.5	240	64
B-1	115.0	1411	264.900	0.49	1.30	1.30	163	136	108	7.5	245	66
B-1	120.0	1416	268.465	0.49	1.30	1.30	163	136	108	7.5	245	68

LEAKAGE @ 16 "Hg = .018 CFM

GAS METER COR. 1.11

PEDCo - ENVIRONMENTAL
SUITE 8 • ATKINSON SQUARE
CINCINNATI, OHIO 45246

ANALYTICAL DATA

PLANT U.S. BUREAU OF MINES GRAND FORKS

DATE 4-3-73

SAMPLING LOCATION DRYER - OUTLET

SAMPLE TYPE PARTICULATE

RUN NUMBER 1

SAMPLE BOX NUMBER 6

CLEAN-UP MAN F. MEADOWS

COMMENTS:

FRONT HALF

ACETONE WASH OF NOZZLE, PROBE, CYCLONE (BYPASS), FLASK, FRONT HALF OF FILTER HOLDER

FILTER NUMBER 200021

LABORATORY RESULTS

436.4 - 4.1

CONTAINER S-73-000-001 432.3 mg

CONTAINER S-73-000-002 571.4 mg

FRONT HALF SUBTOTAL 1003.7 mg

BACK HALF

IMPINGER CONTENTS AND WATER WASH OF IMPINGERS, CONNECTORS, AND BACK HALF OF FILTER HOLDER

ACETONE WASH OF IMPINGERS, CONNECTORS, AND BACK HALF OF FILTER HOLDER

4.7 - 2.2

CONTAINER S-73-000-003 2.5 mg

ETHER-CHLOROFORM EXTRACTION 5.1 mg

CONTAINER S-73-000-004 13.2 mg

17.2 - 4.0

BACK HALF SUBTOTAL 20.8 mg

TOTAL WEIGHT 1024.5 mg

MOISTURE

IMPINGERS

FINAL VOLUME 290 ml

INITIAL VOLUME 200 ml

NET VOLUME 90 ml

SILICA GEL

FINAL WEIGHT 220.1 g

INITIAL WEIGHT 200.0 g

NET WEIGHT 20.1 g

TOTAL MOISTURE 110.1 g

PEDCo-ENVIRONMENTAL
SUITE 8 • ATKINSON SQUARE
CINCINNATI, OHIO 45246
513/771-4330

NOMOGRAPH DATA

PLANT U.S. BUREAU OF MINES - GRAND FORKS, N.D.

DATE 4-4-73

SAMPLING LOCATION DRYER - OUTLET TEST #2

CALIBRATED PRESSURE DIFFERENTIAL ACROSS ORIFICE, in. H_2O	$\Delta H_@$	1.51
AVERAGE METER TEMPERATURE (AMBIENT + 20 °F), °F	$T_{m_{avg.}}$	110
PERCENT MOISTURE IN GAS STREAM BY VOLUME	B_{wo}	6.15
BAROMETRIC PRESSURE AT METER, in. Hg	P_m	28.76
STATIC PRESSURE IN STACK, in. Hg ($P_m \pm 0.073$ x STACK GAUGE PRESSURE in in. H_2O)	P_s	+.30
RATIO OF STATIC PRESSURE TO METER PRESSURE	P_s/P_m	1.0
AVERAGE STACK TEMPERATURE, °F	$T_{s_{avg.}}$	170
AVERAGE VELOCITY HEAD, in. H_2O	$\Delta p_{avg.}$	0.49
MAXIMUM VELOCITY HEAD, in. H_2O	$\Delta p_{max.}$	0.72
C FACTOR		0.85
CALCULATED NOZZLE DIAMETER, in.		0.267
ACTUAL NOZZLE DIAMETER, in.		0.250
REFERENCE Δp, in. H_2O		~~0.49~~ 0.63

PLANT & CITY	DATE	SAMPLING LOCATION	SAMPLE TYPE
U.S. BUREAU OF MINES - GRAND FORKS, N. DAK.	4/4/73	DRYER - OUTLET	PARTICULATE

RUN NO.	OPERATOR	AMB. TEMP (°F)	BAR. PRESS (IN.HG)	STATIC PRESS. (IN.H_2O)	FILTER NUMBER(S)	STACK INSIDE DIMEN. (INCHES)	PITOT TUBE Cp
2	F. MEADOWS - E. MEER	70	28.76	+3.0	200022	7.50	0.83

PROBE LENGTH AND TYPE	NOZZLE I. D. INCHES	H_2O (%)	SAMPLE BOX NO.	METER BOX NO.	METER ΔH @	C FACTOR	PROBE HEAT SET	BOX HEAT SET.	REF. ΔP	RECORD DATA MINS.
3' PYREX-HEATED	0.250	6	2	5	1.51	0.85	250	250	0.63	5.0

EMISSION TESTING FIELD DATA

TRAVERSE POINT NUMBER	SAMPLING TIME, min	CLOCK TIME (24 hr CLOCK)	GAS METER READING (V_m), ft^3	VELOCITY HEAD (Δp_s), in.H_2O	ORIFICE PRESSURE DIFFERENTIAL (ΔH), in.H_2O DESIRED	ORIFICE PRESSURE DIFFERENTIAL (ΔH), in.H_2O ACTUAL	STACK TEMPERATURE (T_s), °F	DRY GAS METER TEMPERATURE INLET ($T_{m_{in}}$), °F	DRY GAS METER TEMPERATURE OUTLET ($T_{m_{out}}$), °F	PUMP VACUUM, in.Hg	SAMPLE BOX TEMPERATURE °F	IMPINGER TEMPERATURE °F
	0	0908	268.580									
A-4	5.0	0908	273.425	0.85	2.50	2.50	162	82	70	6.5	230	70
A-4	10.0	0913	278.389	0.85	2.50	2.50	162	94	72	6.5	260	67
A-4	15.0	0918	283.360	0.85	2.50	2.50	162	102	74	7.0	220	68
A-3	20.0	0923	287.680	0.63	1.85	1.85	162	109	77	5.5	225	70
A-3	25.0	0928	292.473	0.80	2.30	2.30	162	115	80	7.0	225	70
A-3	30.0	0933	297.325	0.80	2.30	2.30	162	120	85	7.0	230	68
A-2	35.0	0938	300.720	0.36	1.10	1.10	162	120	87	4.0	240	67
A-2	40.0	0943	304.020	0.36	1.10	1.10	162	122	90	4.0	245	67
A-2	45.0	0948	307.310	0.36	1.10	1.10	162	123	93	4.0	235	67
A-1	50.0	0953	310.231	0.27	0.81	0.81	162	124	95	3.5	250	67
A-1	55.0	0958	313.135	0.27	0.81	0.81	162	125	97	3.5	255	68
A-1	60.0	1003	316.037	0.27	0.81	0.81	162	125	99	3.5	240	70
	.	1010	316.037	.	.	.				.		
B-4	65.0	1015	320.374	0.61	1.80	1.80	162	119	99	6.5	260	65
B-4	70.0	1020	324.722	0.62	1.80	1.80	162	125	100	7.0	240	65
B-4	75.0	1025	329.075	0.62	1.80	1.80	162	128	101	7.0	220	66
B-3	80.0	1030	333.031	0.48	1.40	1.40	162	129	101	6.0	225	66
B-3	85.0	1035	337.062	0.52	1.55	1.55	162	131	102	6.5	235	67
B-3	90.0	1040	341.135	0.52	1.55	1.55	162	132	103	7.0	250	67
	.	CONTINUED ON FOLLOWING PAGE				.				.		
	.		.	.	.	.				.		
	.		.	.	.	.				.		
	.		.	.	.	.				.		
	.									.		

LEAKAGE @ 15 "Hg = 0 CFM

GAS METER COR. 1.1

PEDCo - ENVIRONMENTAL
SUITE 8 • ATKINSON SQUARE
CINCINNATI, OHIO 45246

	PLANT & CITY	DATE	SAMPLING LOCATION	SAMPLE TYPE
1.	U. S. BUREAU OF MINES - GRAND FORKS, N. DAK.	4/4/73	DRYER - OUTLET	PARTICULATE

	RUN NO.	OPERATOR	AMB. TEMP (°F)	BAR. PRESS (IN.HG)	STATIC PRESS. (IN.H_2O)	FILTER NUMBER(S)	STACK INSIDE DIMEN. (INCHES)	PITOT TUBE Cp
2.	2	F. MEADOWS - E. MEER	70	27.6	+3.0	200022	7.750	0.83

	PROBE LENGTH AND TYPE	NOZZLE I. D. INCHES	H_2O (%)	SAMPLE BOX NO.	METER BOX NO.	METER ΔH @	C FACTOR	PROBE HEAT SET	BOX HEAT SET.	REF. ΔP	RECORD DATA MINS.
3.	3' PYREX - HEATED	0.250	6	2	5	1.51	0.85	250	250	0.63	510

EMISSION TESTING FIELD DATA

TRAVERSE POINT NUMBER	SAMPLING TIME, min	CLOCK TIME (24 hr CLOCK)	GAS METER READING (V_m), ft^3	VELOCITY HEAD (Δp_s), in.H_2O	ORIFICE PRESSURE DIFFERENTIAL (ΔH), in.H_2O DESIRED	ORIFICE PRESSURE DIFFERENTIAL (ΔH), in.H_2O ACTUAL	STACK TEMPERATURE (T_s), °F	DRY GAS METER TEMPERATURE INLET ($T_{m_{in}}$), °F	DRY GAS METER TEMPERATURE OUTLET ($T_{m_{out}}$), °F	PUMP VACUUM, in.Hg	SAMPLE BOX TEMPERATURE °F	IMPINGER TEMPERATURE °F
	0	1040	341.135									
B-2	95.0	1045	345.077	0.47	1.40	1.40	162	133	104	6.5	235	67
B-2	100.0	1050	348.965	0.47	1.40	1.40	162	133	105	6.5	240	68
B-2	105.0	1055	352.843	0.47	1.40	1.40	162	134	106	6.5	220	68
B-1	110.0	1100	356.560	0.42	1.25	1.25	162	135	107	6.5	225	69
B-1	115.0	1105	360.241	0.42	1.25	1.25	162	135	107	6.5	245	70
B-1	120.0	1110	363.920	0.42	1.25	1.25	162	136	108	6.5	250	70

LEAKAGE @ 15 "Hg = 0 CFM

GAS METER COR. ___

PEDCo - ENVIRONMENTAL
SUITE 8 • ATKINSON SQUARE
CINCINNATI, OHIO 45246

ANALYTICAL DATA

PLANT U.S. BUREAU OF MINES

DATE 4-4-73

SAMPLING LOCATION DRYER-OUTLET

SAMPLE TYPE PARTICULATE

RUN NUMBER 2

SAMPLE BOX NUMBER 2

CLEAN-UP MAN F. MEADOWS

COMMENTS:

FRONT HALF

ACETONE WASH OF NOZZLE, PROBE, CYCLONE (BYPASS), FLASK, FRONT HALF OF FILTER HOLDER

FILTER NUMBER 200022

		LABORATORY RESULTS
958.3 - 5.4		
CONTAINER S-73-000-005	952.9	mg
CONTAINER S-73-000-006	56.4	mg
FRONT HALF SUBTOTAL	1009.3	mg

BACK HALF

IMPINGER CONTENTS AND WATER WASH OF IMPINGERS, CONNECTORS, AND BACK HALF OF FILTER HOLDER

ACETONE WASH OF IMPINGERS, CONNECTORS, AND BACK HALF OF FILTER HOLDER

3.0 - 2.1		
CONTAINER S-73-000-007	0.9	mg
ETHER-CHLOROFORM EXTRACTION	3.9	mg
CONTAINER S-73-000-008	9.1	mg
11.5 - 2.4		
BACK HALF SUBTOTAL	13.9	mg
TOTAL WEIGHT	1023.2	mg

MOISTURE

IMPINGERS

FINAL VOLUME	300	ml
INITIAL VOLUME	200	ml
NET VOLUME	100	ml

SILICA GEL

FINAL WEIGHT	223.6 g	g	g
INITIAL WEIGHT	200.0 g	g	g
NET WEIGHT	23.6 g	g	g

TOTAL MOISTURE 123.6 g

PEDCo-ENVIRONMENTAL
SUITE 8 • ATKINSON SQUARE
CINCINNATI, OHIO 45246
513/771-4330

NOMOGRAPH DATA

PLANT U.S. BUREAU OF MINES - GRAND FORKS, N. DAK.

DATE 4-4-73

SAMPLING LOCATION DRYER OUTLET TEST #3

CALIBRATED PRESSURE DIFFERENTIAL ACROSS ORIFICE, in. H_2O	$\Delta H_@$	1.51
AVERAGE METER TEMPERATURE (AMBIENT + 20 °F), °F	$T_{m_{avg.}}$	110
PERCENT MOISTURE IN GAS STREAM BY VOLUME	B_{wo}	6
BAROMETRIC PRESSURE AT METER, in. Hg	P_m	28.76
STATIC PRESSURE IN STACK, in. Hg ($P_m \pm 0.073$ x STACK GAUGE PRESSURE in in. H_2O)	P_s	+.30
RATIO OF STATIC PRESSURE TO METER PRESSURE	P_s/P_m	1.0
AVERAGE STACK TEMPERATURE, °F	$T_{s_{avg.}}$	170
AVERAGE VELOCITY HEAD, in. H_2O	$\Delta p_{avg.}$	0.49
MAXIMUM VELOCITY HEAD, in. H_2O	$\Delta p_{max.}$	0.72
C FACTOR	0.85	
CALCULATED NOZZLE DIAMETER, in.	0.267	
ACTUAL NOZZLE DIAMETER, in.	0.250	
REFERENCE Δp, in. H_2O	0.63	

	PLANT & CITY	DATE	SAMPLING LOCATION	SAMPLE TYPE
1.	U.S. BUREAU OF MINES - GRAND FORKS, N. DAK	4/1/ 4/1/73	DRYER - OUTLET	PARTICULATE

	RUN NO.	OPERATOR	AMB. TEMP (°F)	BAR. PRESS (IN.HG)	STATIC PRESS. (IN.H_2O)	FILTER NUMBER(S)	STACK INSIDE DIMEN. (INCHES)	PITOT TUBE Cp
2.	3	F. MEADOWS - E. MEEK	70	28.76	+3.0	200023	X 75.0	0.83

	PROBE LENGTH AND TYPE	NOZZLE I. D. INCHES	H_2O (%)	SAMPLE BOX NO.	METER BOX NO.	METER ΔH @	C FACTOR	PROBE HEAT SET	BOX HEAT SET.	REF. ΔP	RECORD DATA MINS.
3.	3' PYREX - HEATED	0.250	6	6	5	1.51	0.85	250	250	0.63	5.0

EMISSION TESTING FIELD DATA

TRAVERSE POINT NUMBER	SAMPLING TIME, min	CLOCK TIME (24 hr CLOCK)	GAS METER READING (V_m), ft^3	VELOCITY HEAD (Δp_s), in.H_2O	ORIFICE PRESSURE DIFFERENTIAL (ΔH), in.H_2O DESIRED	ORIFICE PRESSURE DIFFERENTIAL (ΔH), in.H_2O ACTUAL	STACK TEMPERATURE (T_s), °F	DRY GAS METER TEMPERATURE INLET ($T_{m_{in}}$), °F	DRY GAS METER TEMPERATURE OUTLET ($T_{m_{out}}$), °F	PUMP VACUUM, in.Hg	SAMPLE BOX TEMPERATURE °F	IMPINGER TEMPERATURE °F
	0	1158	364.113									
A-4	5.0	1203	369.064	0.86	2.50	2.50		106	94	11.0	260	55
A-4	10.0	1208	374.055	0.86	2.50	2.50		117	94	11.5	225	55
A-4	15.0	1213	379.005	0.86	2.50	2.50		126	95	11.5	225	56
A-3	20.0	1218	383.920	0.80	2.30	2.30		133	98	11.5	230	60
A-3	25.0	1223	388.741	0.81	2.30	2.30		136	99	11.5	225	65
A-3	30.0	1228	393.742	0.83	2.40	2.40		139	101	13.0	220	65
A-2	35.0	1233	397.188	0.37	1.10	1.10		137	103	6.0	220	64
A-2	40.0	1238	400.510	0.35	1.05	1.05		136	104	6.0	220	63
A-2	45.0	1243	403.685	0.30	0.93	0.93		135	106	5.5	225	62
A-1	50.0	1248	406.691	0.28	0.84	0.84		135	107	5.5	230	61
A-1	55.0	1253	409.543	0.25	0.75	0.75		133	108	5.0	235	62
A-1	60.0	1258	412.257	0.25	0.75	0.75		133	108	5.0	240	62
	.	1307	412.257	.	.	.				.		
B-4	65.0	1312	416.285	0.55	1.60	1.60		124	106	9.5	250	62
B-4	70.0	1317	420.370	0.55	1.60	1.60		130	106	10.0	230	64
B-4	75.0	1322	424.437	0.55	1.60	1.60		134	107	10.0	230	66
B-3	80.0	1327	428.130	0.48	1.40	1.40		136	108	9.5	230	68
B-3	85.0	1332	432.290	0.49	1.45	1.45		138	109	10.0	230	72
B-3	90.0	1337	436.230	0.49	1.45	1.45		139	109	10.0	235	74
	.	CONTINUED ON FOLLOWING PAGE.				.				.		
	.		.	.	.	.				.		
	.		.	.	.	.				.		
	.		.	.	.	.				.		
	.		.	.	.	.				.		

LEAKAGE @ 17 "Hg = .017 CFM

GAS METER COR. 1.11

PEDCo - ENVIRONMENTAL
SUITE 8 • ATKINSON SQUARE
CINCINNATI, OHIO 45246

PLANT & CITY	DATE	SAMPLING LOCATION	SAMPLE TYPE
U.S. BUREAU OF MINES - GRAND FORKS, N. DAK	4/1 4/1/73	DRYER OUTLET	PARTICULATE

RUN NO.	OPERATOR	AMB. TEMP (°F)	BAR. PRESS (IN.HG)	STATIC PRESS. (IN.H_2O)	FILTER NUMBER(S)	STACK INSIDE DIMEN. (INCHES)	PITOT TUBE Cp
3	F. MEADOWS - E. MEER	70	28.76	+3.0	200023	17.50	0.83

PROBE LENGTH AND TYPE	NOZZLE I. D. INCHES	H_2O (%)	SAMPLE BOX NO.	METER BOX NO.	METER ΔH @	C FACTOR	PROBE HEAT SET	BOX HEAT SET.	REF. ΔP	RECORD DATA MINS.
3' PYREX - HEATED	0.250	6	6	5	1.51	0.85	250	250	0.63	50

EMISSION TESTING FIELD DATA

TRAVERSE POINT NUMBER	SAMPLING TIME, min	CLOCK TIME (24 hr CLOCK)	GAS METER READING (V_m), ft^3	VELOCITY HEAD (Δp_s), in.H_2O	ORIFICE PRESSURE DIFFERENTIAL (ΔH), in.H_2O DESIRED	ORIFICE PRESSURE DIFFERENTIAL (ΔH), in.H_2O ACTUAL	STACK TEMPERATURE (T_s), °F	DRY GAS METER TEMPERATURE INLET ($T_{m_{in}}$), °F	DRY GAS METER TEMPERATURE OUTLET ($T_{m_{out}}$), °F	PUMP VACUUM, in.Hg	SAMPLE BOX TEMPERATURE °F	IMPINGER TEMPERATURE °F
	0	1337	436.230									
B-2	95.0	1342	440.225	0.50	1.50	1.50		141	110	10.5	245	67
B-2	100.0	1347	444.228	0.50	1.50	1.50		142	111	10.5	245	67
B-2	105.0	1352	448.260	0.50	1.50	1.50		144	112	11.0	240	68
B-1	110.0	1357	452.228	0.50	1.50	1.50		145	113	11.5	245	69
B-1	115.0	1402	456.211	0.50	1.50	1.50		145	113	11.5	245	70
B-1	120.0	1407	460.231	0.50	1.50	1.50		146	114	12.0	245	74

LEAKAGE @ 17 "Hg = 0.017 CFM

GAS METER COR. ___

PEDCo - ENVIRONMENTAL
SUITE 8 • ATKINSON SQUARE
CINCINNATI, OHIO 45246

ANALYTICAL DATA

PLANT U.S. BUREAU OF MINES GRAND FORKS

DATE 4-4-73

SAMPLING LOCATION DRYER - OUTLET

SAMPLE TYPE PARTICULATE

RUN NUMBER 3

SAMPLE BOX NUMBER 6

CLEAN-UP MAN F. MEADOWS

COMMENTS:

FRONT HALF

1042.1 - 3.4

LABORATORY RESULTS

ACETONE WASH OF NOZZLE, PROBE, CYCLONE (BYPASS), FLASK, FRONT HALF OF FILTER HOLDER

CONTAINER S-73-000-009 1038.7 mg

FILTER NUMBER 200023

CONTAINER S-73-000-010 22.4 mg

FRONT HALF SUBTOTAL 1061.1 mg

BACK HALF

9.3 - 1.9

IMPINGER CONTENTS AND WATER WASH OF IMPINGERS, CONNECTORS, AND BACK HALF OF FILTER HOLDER

CONTAINER S-73-000-011 7.4 mg

ETHER-CHLOROFORM EXTRACTION 5.5 mg

ACETONE WASH OF IMPINGERS, CONNECTORS, AND BACK HALF OF FILTER HOLDER

CONTAINER S-73-000-012 14.1 mg

15.7 - 1.6

BACK HALF SUBTOTAL 27.0 mg

TOTAL WEIGHT 1088.1 mg

MOISTURE

IMPINGERS

FINAL VOLUME 300 ml

INITIAL VOLUME 200 ml

NET VOLUME 100 ml

SILICA GEL

FINAL WEIGHT	678.5 g	g	g
INITIAL WEIGHT	455.4 g	g	g
NET WEIGHT	223.1 g	g	g

or 23.1

TOTAL MOISTURE 123.1 g

Grand Forks - Bureau of Mines
Particle Sizing

Run #1

ABORTED

Stage 1 1A 010117 ug
" 2 1B 009883 ug
" 3 1C 010167 ug
" 4 1D 010184 ug
" 5 1E 010348 ug

Filter # 73-101

Silica Gel - 213.1 g
642.6 initial
642.8 final

Run for 17 seconds before ~~the~~ system plugged. Filter had black cake but little was on aluminum inserts.

Sampled at approximately six inches of water

Grand Forks - Bureau of Mines
Particle Sizing

Run #2 - 4-4-73 9:20 - 9:30 A.M.

No aluminum inserts but glasswool has been placed before the filter.

Silica Gel - 644.5 / 642.8 initial Filter # 73-102
moisture → 1.7

Volume = 6.15 ft^3 Temp - 162
Uoc = 16"
ΔH = 1"
Time = 10 min.

Glasswool dirty + filter has light brown cake
Plates showed good catch.

Stage #	Sample #	wt.
1	73-000 015	
2	73-000 016	
3	73-000 017	
4	73-000 018	
5	73-000 019	
glass wool	73-000 020	
filter	73-000 021	

Grand Forks - Bureau of Mines
Particle Sizing - Run #3

4-4-73

Filter # - 73-103 Temp - 162

Silica Gel - ~~641.5 g~~ 637.0
634.7
moisture 2.3 g

No aluminum inserts & no glass wool inserted before filter.

Volume = 14.96 ft^3 ~~254.50~~
ΔH = 1"
Time = 15 min
Vac = 16"

Filter is darker than run #2
Good catch on all plates.

Stage #	Sample #	wt.
1	73-000 022	
2	73-000 023	
3	73-000 024	
4	73-000 025	
5	73-000 026	
filter	73-000 027	

88

DRY MOLECULAR WEIGHT DETERMINATION

PLANT U.S BUREAU OF MINES - GRAND FORKS, N.D.
DATE 4-3-73
SAMPLING TIME (24-hr CLOCK)
SAMPLING LOCATION DRYER OUTLET
SAMPLE TYPE (BAG, INTEGRATED, CONTINUOUS) BAG
ANALYTICAL METHOD ORSAT
AMBIENT TEMPERATURE 70°F
OPERATOR F. MEADOWS - E. MEER

COMMENTS: TEST #1

GAS \ RUN	1		2		3		AVERAGE NET VOLUME	MULTIPLIER	MOLECULAR WEIGHT OF STACK GAS (DRY BASIS) M_d, lb/lb-mole
	ACTUAL READING	NET	ACTUAL READING	NET	ACTUAL READING	NET			
CO_2	0.9	0.9	1.0	1.0	1.0	1.0	0.97	44/100	.43
O_2 (NET IS ACTUAL O_2 READING MINUS ACTUAL CO_2 READING)	19.8	18.9	21.9	20.9	22.2	21.2	20.33	32/100	6.50
CO (NET IS ACTUAL CO READING MINUS ACTUAL O_2 READING)	22.3	3.4 ~~2.4~~	22.3	1.4	22.3	1.1	1.97	28/100	.55
N_2 (NET IS 100 MINUS ACTUAL CO READING)	77.7	77.7	77.7	77.7	77.7	77.7	77.7	28/100	21.76
								TOTAL	29.24

PEDCo-ENVIRONMENTAL
SUITE 8 • ATKINSON SQUARE
CINCINNATI, OHIO 45246
513/771-4330

APPENDIX E

Laboratory Report

CASCADE L1-C2462 North [illegible] 2022 S BETA 4-12-73 PRINTED IN U.S.A.

	EPA Sample #		Filter + container wt.	container wt.	Gross wt.	Tare wt.	Net wt.	
Filter	S-73-000 002 [illegible]		20.0136	19.0342	[illegible]	.4080	[illegible]	
	S-73-000 006 [illegible]		19.3414	18.8775	.4639	.4075	[illegible]	
	S-73-000 010 [illegible]		19.5774	19.1502	[illegible]	[illegible]	.0324	
	EPA #	test #	Beaker #	GROSS wt #1	GROSS wt #2	TARE wt.	NET wt.	VOL.
[illegible]	S-73-000 001	1	F-1	99.7650	[illegible]	99.3225	[illegible]	380
[illegible]	S-73-000 005	2	F-2	99.4256	99.4256	78.4703	[illegible]	500
[illegible]	S-73-000 009	3	F-3	98.2463	[illegible]	97.2041	[illegible]	315
[illegible]	S-73-000 003	1	O-1	98.4442	98.4440	98.4389	[illegible]	640
[illegible]	S-73-000 007	2	O-2	100.9170	100.9170	100.9131	[illegible]	625
[illegible]	S-73-000 011	3	O-3	101.6704	[illegible]	101.6649	[illegible]	[illegible]
[illegible]	S-73-000 [illegible]	1	T-1	97.9828	[illegible]	97.9779	[illegible]	[illegible]
[illegible]	S-73-000 007	2	T-2	97.7471	[illegible]	97.7440	.0030	[illegible]
[illegible]	S-73-000 011	3	T-3	96.0138	[illegible]	96.0044	.0093	[illegible]
[illegible]	S-73-000 004	1	B-1	98.3350	98.3350	98.3178	[illegible]	375
[illegible]	S-73-000 008	2	B-2	101.2530	[illegible]	101.2413	[illegible]	225
[illegible]	S-73-000 012	3	B-3	102.1672	[illegible]	102.1515	[illegible]	150
	S-73-000 013		W-1	97.7788	97.7787	97.7770	[illegible]	299
	Water Blank		W-1 =	3.40 mg/l				
	S-73-000 014		A-1	99.8022	99.8021	99.7967	[illegible]	474
	Acetone Blank		A-1 =	10.80 mg/l				

APPENDIX F

Test Log

APPENDIX F

Test Log

April 2, 1973	2:00 p.m.	Go to plant and setup equipment.
	5:00 p.m.	Leave plant.
April 3, 1973	8:00 a.m.	Arrive at plant and do preliminary work.
	12:00 p.m.	Begin first particulate run.
	12:15 p.m.	Begin first Brinks run but system plugs after 17 seconds. Problem due to equipment and not the process.
	4:30 p.m.	Set up for tomorrow's runs and leave plant.
April 4, 1973	8:00 a.m.	Arrive at plant and set up Brinks.
	9:00 a.m.	Begin second particulate run.
	9:20 a.m.	Begin second particle size run using glass wool before the filter.
	9:30 a.m.	Finish Brinks & begin clean-up. Good catch on plates.
	11:15 a.m.	Finish second particulate run.
	12:00 p.m.	Begin third particulate run.
	12:30 p.m.	Begin third particle size run.
	12:45 p.m.	Finish particle sizing and clean it up. Looks like a good run.
	2:15 p.m.	Finish third particulate run. Clean-up second and third runs. Begin packing up to leave plant.
	4:30 p.m.	Leave plant.

APPENDIX G

Project Participants

Project Participants

PEDCo Environmental Specialists

Frank Meadows	Technician
Ed Meer	Technician

Environmental Protection Agency

Doug Bell	Chemical Engineer, EMB
Charles Sedman	Chemical Engineer, ISB

APPENDIX H

PARTICLE SIZE DISTRIBUTION:

BUREAU OF MINES

GRAND FORKS, NORTH DAKOTA

APRIL 4, 1973

On April 4, 1973, Doug Bell of the Emission Measurement Branch conducted particle size distribution tests on the emissions from the U. S. Bureau of Mines coal cleaning facility located in Grand Forks, South Dakota. Two complete test runs were made at the stack outlet using a Brink Model B Cascade Impactor with a back-up filter (Figures 1 and 2). The first test run attempted was aborted shortly after it was begun; no data is given for this test. Test results for runs two and three are presented.

The Brink Model B impactor has five collection stages. For these tests a glass fiber filter was also used, thus classifying the particulates into six distinct size ranges. The impactor was operated at a constant pressure drop giving particle diameter ($D_{p_{50}}$) size cuts ranging from 2.3 microns to 0.25 microns. The characteristic particle diameter, $D_{p_{50}}$, is the diameter of a spherical particle of unit density (1 gm/cm^3) for which 50% of the particles will impact on the given stage and 50% will pass around to the succeeding stage. It is the equivalent aerodynamic diameter that the cascade impactor directly measures, and it is for this reason that the results are reported in terms of spherical particles of unit density. Not only does this method of reporting the data form a good standard for comparison between particles of varying shape and density, but it is generally the aerodynamic particle size which is of interest to the tester.

All test runs were made at a single point of steady velocity. The second test was conducted for ten minutes; the third for fifteen minutes. The results of each test run are listed in Table one; the data is presented in terms of the weight percent of particulate collected on each stage. Figure 3 is simply a

graphical representation of this data. The data is presented for each run as well as for the two run average because of the large variance in the data for the two runs. It appears that the particulate collected on the first two stages during run 3 is unusually low. Some problem was encountered in handling the samples after collection, and it is possible that some of the sample from the first two stages was lost.

Figure 4 is the particle size distribution graphed in terms of the mass percentage of particulate collected versus effective particle diameter. A straight line can be approximated through the data points for each test run (least squares approximation was not used). This indicates that the particle size distribution approximates a log normal distribution. Once again, because of the data variance for the two runs, the data is presented for each run as well as for the two-run average. Note that the mass median diameter of the distribution is 1.1, 0.55 or 0.8 microns depending on whether the distribution for run 2, run 3, or the two-run average is used, respectively. The mass median diameter is the characteristic diameter of the distribution at which 50% of the mass collected is composed of particles having diameters less than or equal to that diameter.

Due to the variance in the two test runs, it is difficult to draw any conclusions from the test data.

SUMMARY OF RESULTS

TABLE 1

STAGE	D_{p50} (microns)	Weight Percent Run 2	Weight Percent Run 3	Weight Percent Ave.	Cumulative Percent Less Than D_p Run 2	Cumulative Percent Less Than D_p Run 3	Cumulative Percent Less Than D_p Ave.
1	2.3	28.4	12.0	20.2	71.6	88.0	79.8
2	1.3	16.4	5.3	10.9	55.2	82.7	68.9
3	0.9	16.4	20.0	18.2	38.8	62.7	50.7
4	0.4	17.9	18.7	18.3	20.9	44.0	32.4
5	0.25	14.9	28.0	21.4	6.0	16.0	11.0
Filter		6.0	16.0	11.0			
Total		100	100	100			

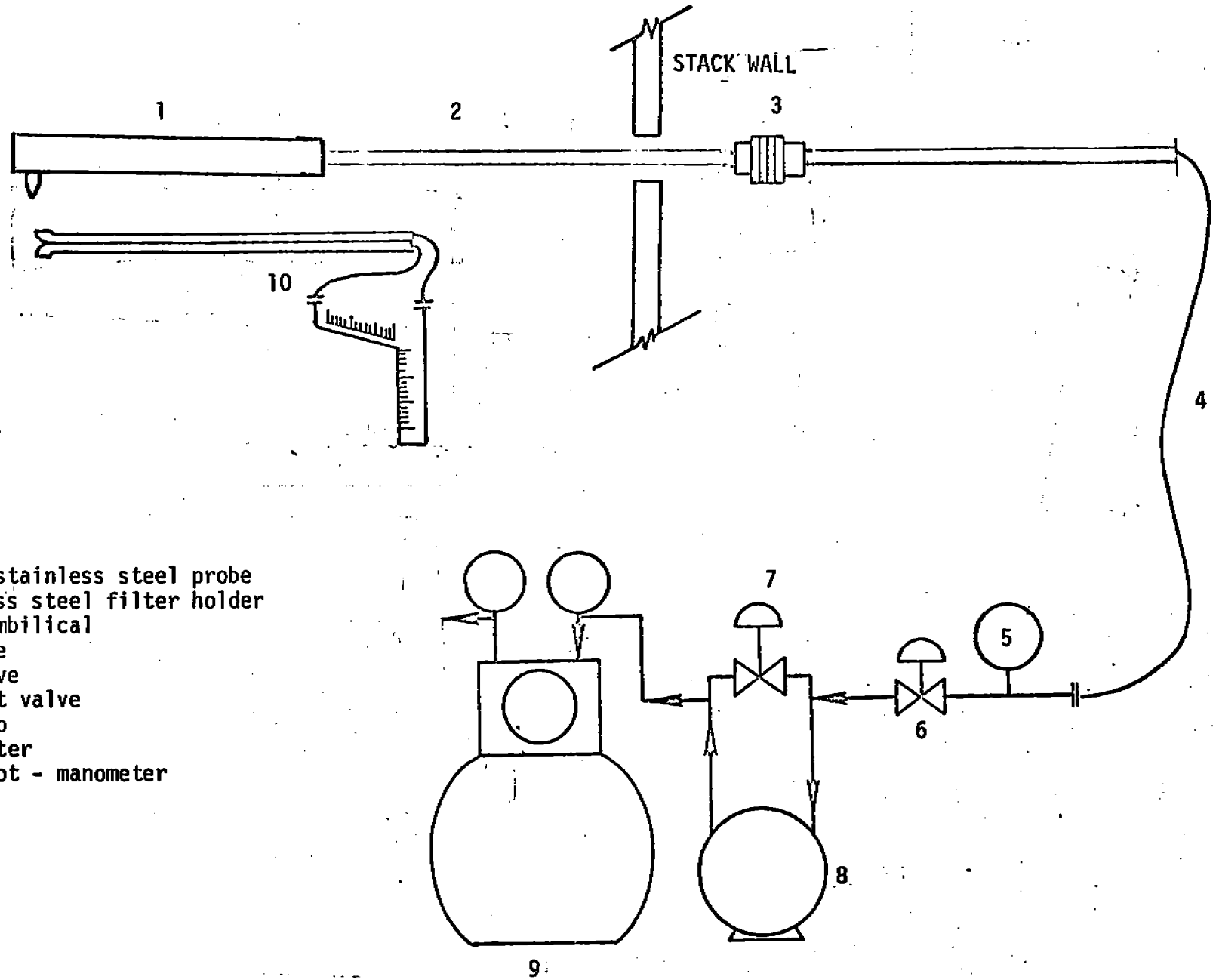

1. Impactor
2. 1/2' I.D. stainless steel probe
3. 3" stainless steel filter holder
4. Flexible umbilical
5. Vacuum gage
6. Course valve
7. Fine adjust valve
8. Vacuum pump
9. Dry gas meter
10. S-type pitot - manometer

Figure 1 sampling train.

Model B Cascade Impactor

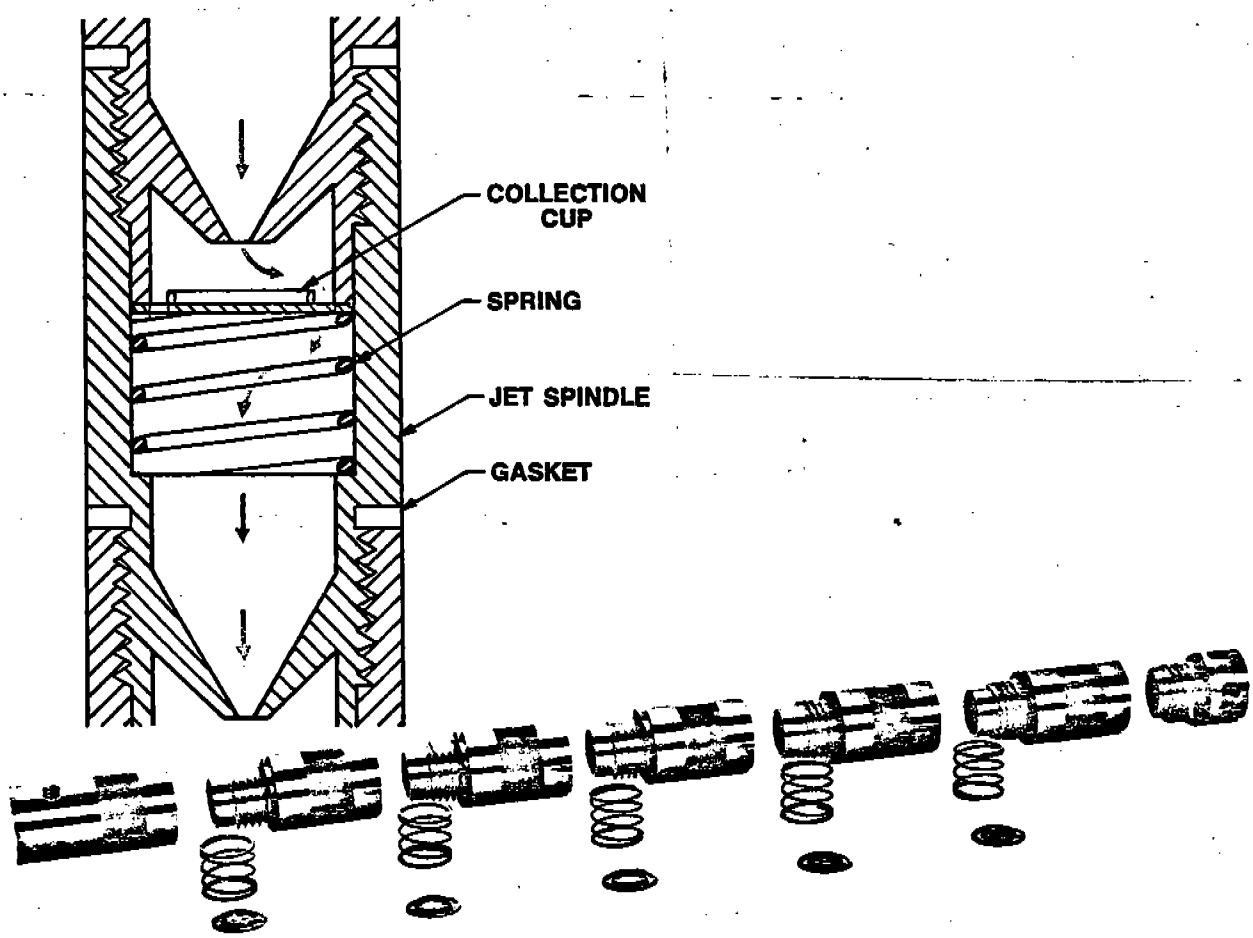

Figure 2

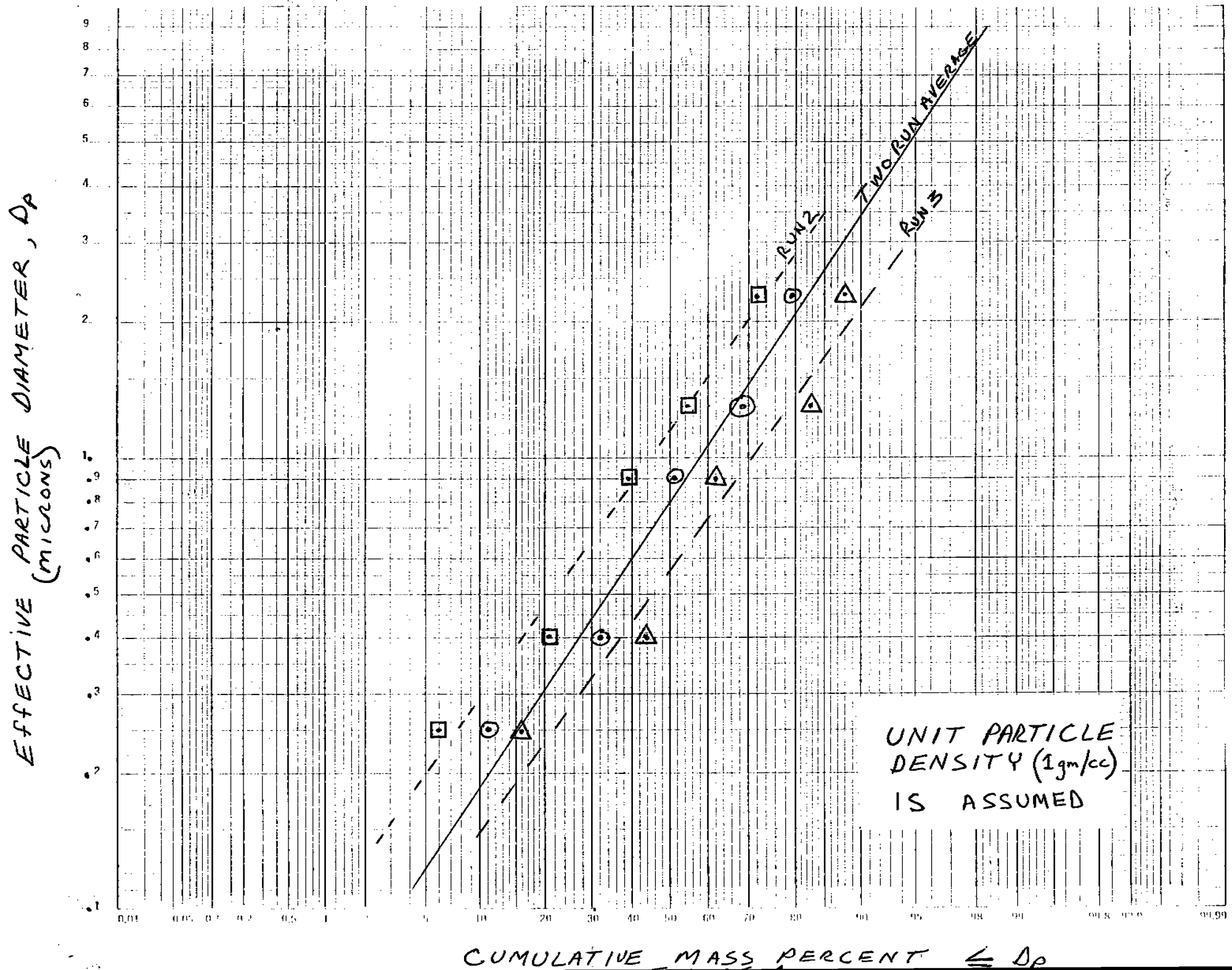
EFFECTIVE PARTICLE DIAMETER, D_p (MICRONS)
CUMULATIVE MASS PERCENT $\leq D_p$
TWO RUN AVERAGE
RUN 2
RUN 3
UNIT PARTICLE DENSITY (1gm/cc) IS ASSUMED

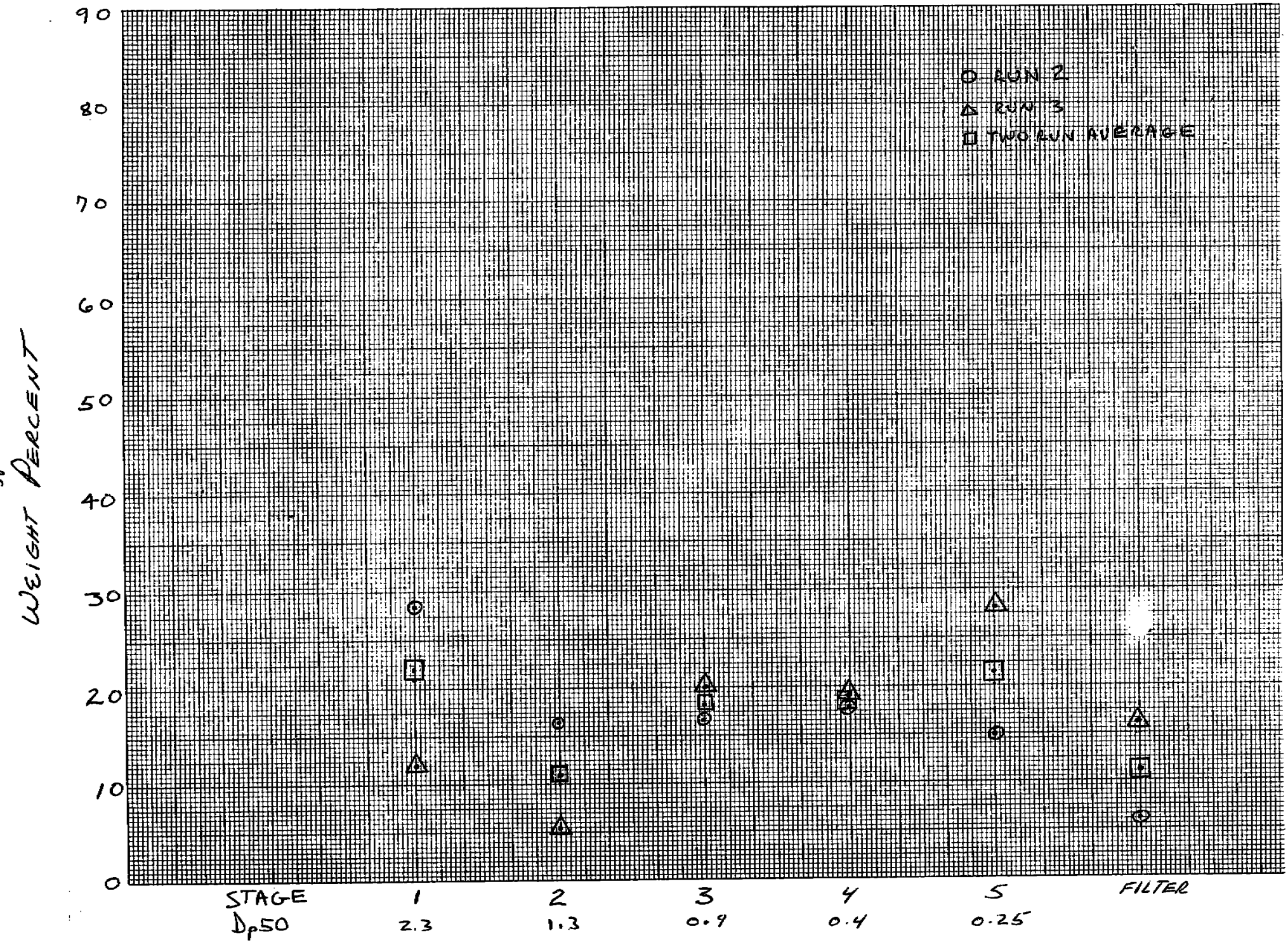
90
80
70
60
50
40
30
20
10
0
WEIGHT PERCENT
RUN 2
RUN 3
TWO RUN AVERAGE
STAGE
D_p50
1
2.3
2
1.3
3
0.9
4
0.4
5
0.25
FILTER

FIGURE 3