Victorville #2
coal Precalciner

AP-42 Section 11.6
Reference 58
Report Sect. 4
Reference 63

Note: This is a reference cited in *AP 42, Compilation of Air Pollutant Emission Factors, Volume I Stationary Point and Area Sources.* AP42 is located on the EPA web site at www.epa.gov/ttn/chief/ap42/

The file name refers to the reference number, the AP42 chapter and section. The file name "ref02_c01s02.pdf" would mean the reference is from AP42 chapter 1 section 2. The reference may be from a previous version of the section and no longer cited. The primary source should always be checked.

RECEIVED 1987

EMISSION TESTS ON QUARRY PLANT #2 KILN

February 24, 1987

Prepared for

Southwestern Portland Cement
North End "E" Street
Victorville, California 92392

March 1987

Prepared by

Pape & Steiner Environmental Services
5801 Norris Road
Bakersfield, California 93308

Report PS-87-1024/Project 5904-87

#5

EMISSION TESTS ON QUARRY PLANT #2 KILN

February 24, 1987

Prepared for

Southwestern Portland Cement
North End "E" Street
Victorville, California 92392

Ref 42 Precalciner Kiln
Down rated from
A to D by MAI but
I'm not sure why.
Report includes Calibration
data & good values for
CO & CO2

Pr

Pape & Steiner E
5801 N
Bakersfield, (

Report PS-87-1024/Project 5904-87

TABLE OF CONTENTS

Section		Page
1	INTRODUCTION	1-1
2	RESULTS	2-1
3	SAMPLING PROCEDURES	3-1
4	ANALYTICAL PROCEDURES	4-1
5	QUALITY ASSURANCE	5-1
	APPENDIX	A-1

SECTION 1

INTRODUCTION

At the request of Southwestern Portland Cement, Pape & Steiner Environmental Services undertook a series of emission tests on the effluent of #2 Kiln on February 4, 1987. Kiln #2 is in service at SwPC's quarry plant in Victorville, California. The purpose of these tests was measure the particulate emission rates and determine compliance with SBCAPCD Rules 404 and 405.

This test series was also meant to check the emission rate from the baghouse serving #2 Kiln after a preliminary report from a CARB Audit Test indicated noncompliance. The CARB audit tests were conducted November 11, 1986. A copy of CARB's final report was not available during this test series. The results of this test series shows compliance with San Bernadino County APCD Rules 404 and 405.

Messrs. Ralph Pape and Steve Carter conducted the source tests for Pape & Steiner Environmental Services on February 24,1987. Triplicate tests for particulate were conducted using EPA Method 5. Triplicate tests for NO_x, SO_2, CO, CO_2 and O_2 were conducted using CARB Method 1-100 continuous monitor procedures. Particulate data for the back half catch is reported for this test series. The back half catch was not requested

during the initial compliance demonstration testing in March 1985. Some problems were encountered during the analysis of the back half samples. Reactions between chlorides in the sample and the aluminum weighing dishes caused erroneously high weights. These analyses were repeated using glass and a much lower weight was found. The weights from the analysis in glass were used to calculate the total particulate emission rates.

Kiln #2 operations were increasing to full load during Test 1 and accounts for the lower average feed rate. Operations were fairly constant during Tests 2 and 3. Some changes to the fuel rates were being made to control temperature. These changes seemed only to affect the NO_x emission levels.

Section 2 of this report presents source test results. Sampling and analysis procedures are described in Sections 3 and 4. Section 5 presents the quality assurance procedures used during this program. Raw data sheets, continuous monitor strip charts, calculation worksheets and equipment calibration are included in the Appendix.

SECTION 2

RESULTS

Table 2-1 presents the results of particulate and continuous monitor source tests. The data is presented at SBCAPCD standard conditions (60°F, 29.92 inches of Mercury).

Kiln 2 operations were increasing to full load during Test 1 which accounts for the lower average feed rate. Operations were fairly constant during Tests 2 and 3. Some changes to the fuel rates were being made to control temperature. The changes seemed only to affect the NO_x emission levels.

The particulate mass is reported in two ways -- front half and front half plus back half. The front half catch (nozzle, probe, filter holder wash and filter) represents matter which is filterabla at 250°F. EPA bases compliance on this value. The back half catch represents matter which is caught in the water impingers of the sample train. San Bernadino County bases compliance of the combined front and back half catchs. Subsequent analysis of material found in the back half showed it was primarily ammonium chloride and sulfate. Since these materials are filterable, they should have been collected in the front half of the sample train. Finding them in the back half indicates they were formed there by stack gases

trapped in the impinger solutions. The back half catch should be disregarded from this source because the gaseous components form pseudo-particulate in the back half of the sample train.

NO_x, SO_2 and CO concentrations are presented on a dry volume basis. NO_x concentrations have also been standardized to 3-percent O_2. Pound per hour emission rates were calculated from the concentrations and volumetric flowrate measurements.

KF LOI = 34.55%

$Clinker_{TPH} = \frac{KF_{TPH} \times 0.89}{1.65}$

TABLE 2-1. SUMMARY OF SOURCE EMISSION TEST DATA

Unit Tested: Kiln 2 Baghouse Location: SWPC Quarry Plant

Test Number	1	2	3	Average
Date		February 24, 1987		
Test Condition (Tons Per-Hour Feed)	193	214	211	
Barometric Pressure (in. Hg)	26.08	26.04	26.00	26.04
Stack Pressure (in. Hg)	26.07	26.03	25.99	26.03
Stack Area (Ft^2)	139.63	139.63	139.63	139.63
Elapsed Sampling Time (min.)	72	72	72	72
Volume Gas Sampled (dscf)	48.4632	50.0944	49.1162	49.2246
GAS DATA				
Average Gas Velocity (fps)	38.31	39.74	38.30	38.78
Average Gas Temperature (°F)	374	380	367	374
Gas Flowrate (dscfm)	165,108	169,820	165,749	166,893
Gas Analysis (Dry % Basis)				
Carbon Dioxide	20.2	20.1	20.6	20.3
Oxygen	8.9	8.7	8.8	8.8
Water	5.3	5.3	5.4	5.4
EMISSION CONCENTRATION				
Filterable Particulate (gr/dscf)	0.0026	0.0022	0.0029	0.0026
Rule 404 -- Total Particulate (gr/dscf)	0.0039	0.0032	0.0042	0.0038
CO (ppm)	500	463	533	499
SO_2 (ppm)	1.8	2.2	2.5	2.2
NO_x (ppm)	650	611	541	601
NO_x (ppm at 3% O2)	972	900	800	891
EMISSION RATE				
Filterable Particulate (lb/hr)	3.61	3.20	4.08	3.63
Rule 405 -- Total Particulate (lb/hr)	5.46	4.72	6.00	5.39
CO (lb/hr)	365.53	347.77	391.39	368.23
SO_2 (lb/hr)	3.06	3.74	4.20	3.67
NO_x (lb/hr)	781.04	754.53	652.04	729.20
KF T/hr	206	215.0	211.2	210.7
Clinker T/hr	111	116	114	113.7
Coal T/hr				
" - Pyroclone	5.9	7.85	7.50	
" Kiln	7.60	7.70	7.50	
" Total	13.5	15.55	15.0	14.7
NO_x #/TCl	7.04	6.50	5.72	6.41
NO_x #/MMBTU	2.22	1.86	1.67	1.91
NO_x/TKF	3.79	3.51	3.09	3.46

Sunnyside Coal — @ 13050 BTU/lb = 26.1 MM BTU/Ton

From Printout Last page of report

SECTION 3

SAMPLING PROCEDURES

This section of the report describes the equipment and procedures used to conduct the particulate gaseous tests on this program.

3.1 PRELIMINARY MEASUREMENTS

Before conducting the stack tests a series of preliminary measurements were made to determine:

- The location of the sampling site and the number and location of the sampling points to be used (EPA Method 1)
- The velocity, temperature, and pressure of the gases in the stack (EPA Method 2)
- The composition of the stack gases (EPA Method 3)
- The moisture content of the stack gases (psychrometric chart)

Using the results of these preliminary measurements and the calibration constants for the sampling train, a series of calculations were made to determine the value of K, a constant, and N_d, ideal nozzle diameter, required to run an isokinetic test according to the equation:

$$\Delta H = \left\{ \frac{60^2 \pi^2 K_p^2 C_p^2 (1 - B_{wo})^2 P_s MW_d}{576^2 K_o^2 MW_s P_m} \right\} (N_d^4) \left(\frac{T_m}{T_s} \right) (\Delta P)$$

where

$$K = \left\{ \frac{60^2 \pi^2 K_p{}^2 C_p{}^2 (1 - B_{wo})^2 P_s MW_d}{576^2 K_o{}^2 MW_s P_m} \right\}$$

An actual nozzle, whose diameter was as close as possible to the ideal nozzle diameter, was selected for the test. Isokinetic sampling rates for each sampling point in the stack were computed using the equation:

$$\Delta H = (K)(N_d{}^4)\left(\frac{T_m}{T_s}\right)(\Delta P)$$

Since K and N_d are known, and remain constant during a test, the only variables are the meter temperature, the stack temperature and the velocity pressure for each sampling point.

3.2 PREPARATION OF THE PARTICULATE SAMPLING TRAIN

All sampling train components were cleaned in the laboratory (soap and water, tap water rinse, distilled water rinse, and IPA rinse) to eliminate previous contamination. The sampling train components were sealed and transported to the sampling site in a mobile lab. The EPA Method 5 equipment used to measure particulates (filterable and total) consisted of:

- A calibrated 316 stainless steel nozzle for isokinetic sampling
- A heated Pyrex glass sampling probe (6 feet long) equipped with an S-type pitot tube and a thermocouple to measure stack velocity, pressure and temperature

- A heated Pyrex glass filter holder containing a weighed 100-mm Reeve Angel 934 AH glass fiber filter
- A Pyrex glass impinger train in an icebath (impingers 1 and 2 contain 100 ml distilled water; impinger 3 is dry; bubbler 4 contains a weighed amount of silica gel)
- An umbilical to connect the probe and sample box to the control module
- A control module containing a vacuum pump, a calibrated dry gas meter and a calibrated orifice meter to measure the pressure, temperature and flowrate throughout the train.

The sampling train was charged in the mobile lab using freshly prepared reagents. Each impinger and its contents was weighed to the nearest 0.1 gm on a calibrated electronic balance. Blanks of all filters and reagents were retained for subsequent analysis. The sampling point locations were marked on the probe using a high-temperature marker. The sampling train was completely assembled and lifted to the sampling site.

3.3 SAMPLING PROCEDURES FOR PARTICULATE SAMPLING TRAIN

Prior to a test, the sampling train was heated and leak-checked at 15 inches Mercury to insure leakage was less than 0.02 cfm. The S-type pitot tube was also leak-checked. The sampling train was installed on the unirail and the probe was inserted into the stack at the farthest point. An isokinetic sampling rate was calculated using an HP-41CV calculator for each sampling point on the traverse (6 points per traverse; 4 traverses at 90°). Each point was sampled for an equal period of time (3 minutes)

and all pertinent data was recorded on the data sheet for each point. The probe and sample box were maintained at 250°F throughout the traverse. The gases leaving the impinger train were maintained at <70°F. At the end of a traverse, the probe was withdrawn from the stack and the entire sampling train was transferred (in tact) to the next sampling port. Another traverse of the stack was completed and the sampling train was withdrawn for the final leak check. This leak check was performed at 15 inches Mercury or at the highest vacuum achieved during the test. The S-type pitot tube was also checked at this time. The sampling train was then purged with ambient air for 15 minutes using the highest ΔH measured during the test. After the train was purged, the probe, nozzle, filter holder, and impinger train was sealed with tin foil and lowered to the mobile lab for sample recovery.

3.4 SAMPLE RECOVERY PROCEDURES FOR PARTICULATE SAMPLING TRAIN

Sample recovery occurred in the mobile lab. The nozzle and probe were brushed and rinsed three times using ACS reagent grade acetone into a polyethylene sample bottle. The 100-mm filter was removed from the 4-inch filter holder and sealed in its petri dish. The front half of the 4-inch glass filter holder was brushed and rinsed with acetone. Each impinger was removed from the icebath, wiped dry and weighed to the nearest 0.1 gm. The contents of impingers 1, 2 and 3 were transferred to a polyethylene sample bottle. The back half of the 4-inch glass filter holder, the glass connectors, impingers 1, 2 and 3 were rinsed with distilled water and the rinsings were transferred to this same bottle. All sample bottles and

petri dishes were marked and labeled. A chain-of-custody log was completed and the field data sheet was also labeled with the sample ID numbers. The sampling train was then recharged in preparation for the next test.

3.5 SAMPLING PROCEDURES FOR CONTINUOUS MONITORING

The continuous monitors used in the Pape & Steiner Mobile Monitoring Lab are shown in Table 3-1. Figure 3-1 is a schematic of the continuous monitoring system. The procedures used to continuously monitor stack gases for NO_x, SO_2, CO, CO_2, and O_2 strictly follow CARB Method 1-100.

Sample was taken from the stack using a 316 stainless steel probe. A Balston filter holder and fiberglass filter (99.9999 percent efficiency retention of 0.6 micron particles) was connected to the outlet of the probe. Sample gas was transported through heated Teflon sample line (maintained at >250°F) by a Teflon-lined diaphragm pump to a 316 stainless steel refrigeration type conditioner (Hankison Model E-4G-SS). The sample gas was passed through the conditioner two separate times under vacuum before entering the pump, then two additional times under pressure. The clean, dry sample gas (approximately 35°F) was then transported to the continuous analyzer system through an unheated Teflon line. A series of flowmeters, valves, and regulators maintain constant flow through the system at a constant pressure.

Calibrations of the continuous analyzers were performed using EPA Protocol 1 calibration gases ($\pm$ 1 percent) for criteria pollutant analysis (NO_x/SO_2) and certified calibration gases ($\pm$ 1 percent) for fixed gas analysis. Copies of the gas certifications are included in the Appendix of

TABLE 3-1. CONTINUOUS MONITORING LAB

NO_x CHEMILUMINESCENT ANALYZER -- THERMO ELECTRON MODEL 10

Response Time (0-90%)	1.5 sec -- NO mode 1.7 sec -- NO_x mode
Zero Drift	Negligible after 1/2 hour warmup
Linearity	±1% of full scale
Accuracy	Derived from the NO or NO_2 calibration gas, ±1% of full scale
Output	0.100 mV, 0-10 mV, 0-5 V, 0-10 V

O_2 ANALYZER, FUEL TYPE -- TELEDYNE MODEL 326

Response Time (0-90%)	60 seconds
Accuracy	±1% of scale at constant temperatures; ±1% of scale of ±5% of reading, whichever is greater, over the operating temperature range
Output	0-1 V

CO_2/CO INFRARED ANALYZER -- ANARAD MODEL AR-600

Response Time (0-90%)	5 seconds
Zero Drift	±1%
Span Drift	±1%
Linearity	1%
Resolution	Less than 1% of full scale
Output	0-1 V

SO_2 UV ANALYZER -- DUPONT MODEL 400

Response Time (0-90%)	Less than 1 second
Zero Drift	Less than 1% full scale in 24 hours
Linearity	±1% full scale
Accuracy	±2% full scale
Output	0-10 mV
Operating Ranges	0-100 ppm, 0-1000 ppm

STRIP CHART RECORDERS (3) -- LINEAR MODEL 486

Pen Response	20 inches/second
Span -- full scale	1 mV through 10 V
Zero Set	Electronically adjustable full scale with 1 full scale of zero supression
Accuracy Dead Band Linearity Repeatability	Total limit of error ±0.5%

SCOTSMAN TRAILER

Fully Insulated
Air conditioned
8-ft x 14-ft x 11-ft

1. Filter 0.6 μ, 99.9999 percent efficient
2. Duct
3. 316 stainless steel probe
4. 3/8-inch, heated (250°F) Teflon
5. Four-pass conditioner-dryer, 316 stainless steel internals
6. 3/8-inch, unheated Teflon
7. Teflon-lined sample pump
8. 3/8-inch unheated Teflon
9. Rotameter
10. 1/4-inch Teflon tubing
11. Calibration gas manifold
12. Calibration gas selector valve
13. Calibration gas cylinders
14. Backpressure regulator
15. Auxiliary analysis port

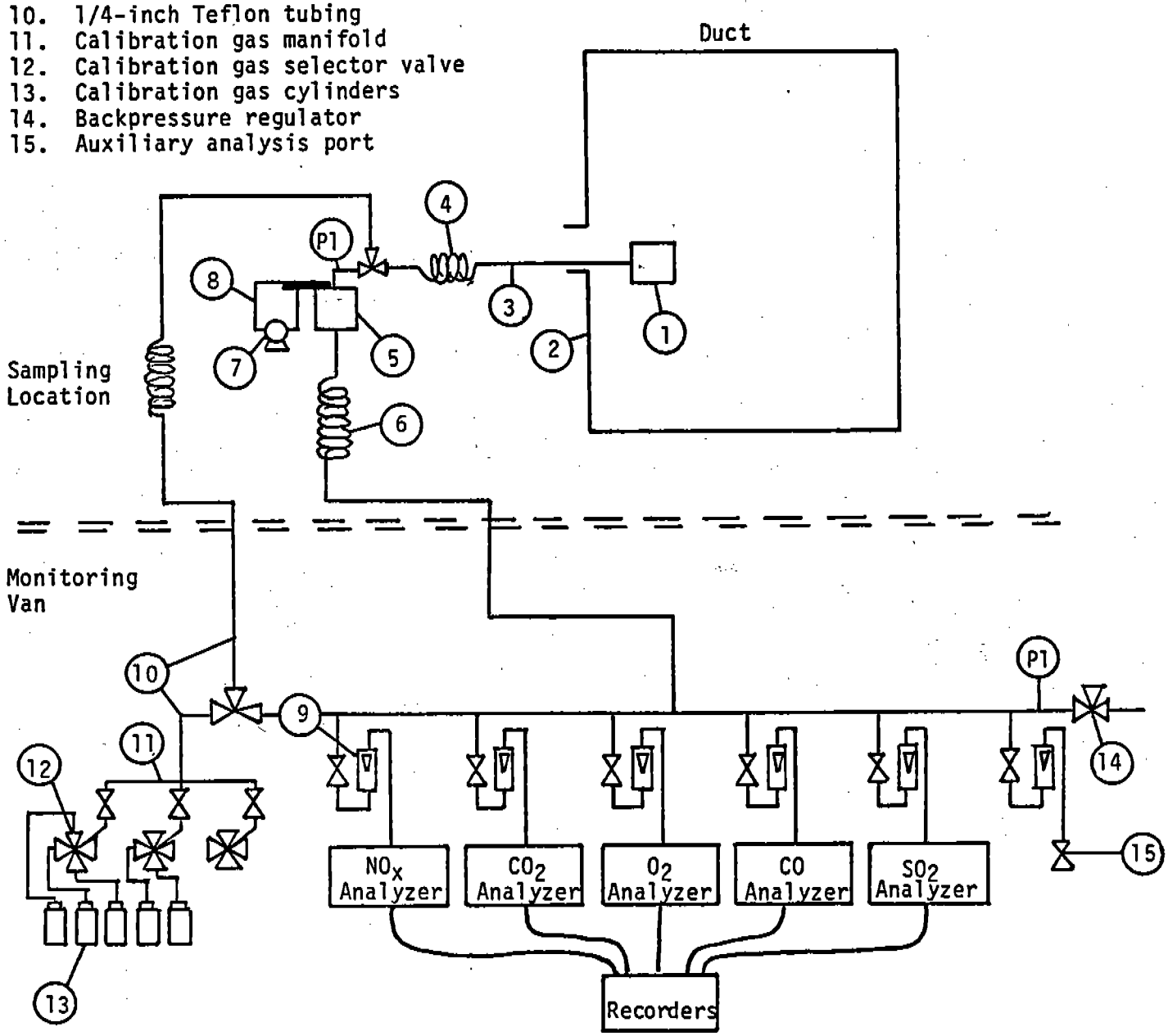

Figure 3-1. Schematic of Continuous Monitoring System.

this report. All pertinent data (date, time, test locations, analyzer range, cal gas value) were recorded on both the field data sheets and continuous analyzer strip charts in the field.

At the start of the test, a leak-check was performed. The sample probe was removed from the stack and the end was sealed with a Swagelok cap. A leak-check is successful only if pressure at the analyzer system and flow through the rotameters to the individual analyzers all drop to zero. A mandatory leak-check was performed at the completion of each test.

An initial calibration was performed at the start of the test period by introducing zero and span gases for each analyzer and making the necessary adjustments. Calibration gas values were recorded on the continuous monitor strip charts and field data sheets. A calibration check was completed at the end of the test and adjustments (if necessary) to the analyzers were made in preparation for another test.

Test data was collected by recording 10-minute averages from the strip chart recordings onto the field data sheets. Data collected over the 2-hour test period was averaged and reported. A fuel analysis was used to calculate the F-factor, dscf/MMBtu corrected to zero percent O_2 (standard conditions 60°F, 29.92 inches Mercury), as described in 40 CFR 60.45. The NO_x and the F-factor were used to calculate the emission factor in lb/MMBtu.

SECTION 4

ANALYTICAL PROCEDURES

This section of the report describes the procedures used to analyze the samples collected during the test program. All analyses were performed in the Pape & Steiner climate-controlled laboratory in Bakersfield.

4.1 ANALYSIS OF PARTICULATE SAMPLES

4.1.1 Nozzle, Probe, Filter Holder Wash

The volume of the acetone washings were measured and the washings were transferred to clean, tared, aluminum weighing dishes. The dishes were placed on a hot plate in a fume hood and gently heated to dryness. The dishes with the dry residue were desiccated and weighed repeatedly at 6-hour intervals until a constant weight was achieved (to the nearest 0.01 mg with a tolerance of <0.1 mg between weighings). The ACS reagent grade acetone blank was treated in the same manner.

4.1.2 Filter

The 100 mm filter was removed from its petri dish and transferred to an oven where it was heated for 2 hours at 105°C. The filter was then desiccated and weighed repeatedly at 6-hour intervals until a constant weight was achieved (to nearest 0.01 mg with a tolerance of <0.1 mg between weighings). An unused, tared blank filter was treated in the same manner. 221°F

Acid mist filter

why?

4.1.3 Condensible Particulate

The 47-mm glass fiber filter was leached with distilled water and the leach was added to the contents and washings from impinger 1. The volume was measured and an aliquot was transferred to a clean, tared evaporating dish. The dish was placed on a hot plate in a fume hood and gently heated to dryness. The dish with the dry residue was desiccated and weighed repeatedly at 6-hour intervals until a constant weight was achieved (to nearest 0.01 mg with a tolerance of <0.1 mg between weighings).

Is for Method 5-B - is back filter between IPA impingers & H_2O_2 impingers.
Does not belong in this report.
DYM per Ralph Pape 3/16/87

SECTION 5

QUALITY ASSURANCE

5.1 PARTICULATE SAMPLING EQUIPMENT

A detailed record of repair and maintenance to each sampling train is kept. Preventative maintenance to each system is performed periodically to avoid complete component breakdown during a field test.

A detailed record of sampling system calibrations is also kept. Calibration data for the sampling nozzles, pitot tubes, dry gas meters and orifice meters are available for review. Results of the EPA Quality Assurance Branch biannual audits of the dry gas meter and orifice meter combinations are also logged and verify our in-house calibration data. The calibration data for the equipment used on this program can be found at the end of this section.

5.2 LAB ANALYSIS

All field samples are assigned a label and an ID number. This ID is also affixed to a chain-of-custody log and to the field data sheet to eliminate any chance of sample mixup.

Prior to analysis, all glassware is thoroughly cleaned (soap and water, tap water rinse, distilled water rinse, IPA rinse) to eliminate any contamination. The evaporating dishes used to evaporate the washings are

treated the same as a sample (dried in an oven, desiccated and weighed repeatedly at 6-hour intervals until a constant weight is achieved). The glassware used to measure volumes and make transfers and dilutions are all NBS Class A to insure accurate measurements. All weighings are carried out on a Mettler Model H54AR analytical balance supported by a marble table in a separate room from the main analytical laboratory. The balance is calibrated regularly against an NBS Class S-1 weight.

All reagents used in the field and in the laboratory are ACS reagent grade and blanks of these reagents are evaluated for every set of tests. Blanks are taken in the field from the squeeze bottles and not the original container. Records are kept on these blanks to insure consistent quality of the reagents. Prior to use, the IPA is also analyzed to insure no peroxides are present which could lead to high SO_3 and low SO_2 values.

5.3 CONTINUOUS MONITORS

The NO_x and SO_2 analyzers are calibrated before and after each test using an EPA Protocol 1 gas ($\pm$ 1 percent) traceable to NBS. The CO, CO_2, and O_2 analyzers are calibrated before and after each test using a certified gas mixture ($\pm$ 1 percent). Copies of these certifications are included in the Appendix of this report.

A system check was performed during calibration checks. This was done by introducing span gas at the inlet to the sampling handling system (after the heated line) and measuring the response. The purpose of this test is to check the sampling handling portion of the continuous monitor system for sample loss.

The CO interferences in NDIR-type analyzers described in EPA Method 10, caused by CO_2, have been eliminated by utilizing an electronic cross-talk feature in the dual CO/CO_2 analyzer. The crosstalk is setup by injecting a known amount of CO-free CO_2 and balancing out the CO interference response. Once this has been done, the CO values will automatically be corrected for the amount of CO_2 being analyzed at any particular instant.

A multipoint calibration linearity check of the continuous analyzers was performed on December 10, 1986. These results were well within CARB limitations of ± 2 percent of full scale. Table 5-1 lists the results of this check.

TABLE 5-1. MULTIPOINT CALIBRATION LINEARITY CHECKS
(TRAILER 2 - December 10, 1986)

Gas	Cal Gas (ppm)	Final Reading (ppm)	Difference (ppm)	% Difference (CARB allowable ±2% Full Scale)
NO_x	0	0	0	0
	40.0	40.0	0	0
	90.3	92	1.7	1.7
	203.6	205	1.4	0.6
SO_2	0	0	0	0
	7*	5	-2	-2.0
	51.53	51	-0.53	-0.5
CO	0	0	0	0
	24.96	24	-0.96	0.2
	201	202	1.0	0.2
CO_2	0	0	0	0
	8.04	8.0	-0.04	-0.2
	14.1	14.1	0	0
O_2	0	0	0	0
	4.03	4.0	-0.03	-0.3
	20.9	20.8	-0.1	-0.4

Method 20 NO_x Checks:

	NO_x Response	NO_2 Response
201 ppm CO	0	
51.53 ppm SO_2	0	
18.5 ppm NO_2 Converter Efficiency		18

*EPA Method 5/8

BPR14

APPENDIX

Pape & Steiner Environmental Services

SAMPLING POINT LOCATION DATA SHEET

#1853/.3217

Plant SWPC

Date 2/22/87

Test Location #2 Kiln Outlet

Upstream Dist./Dia. 92"/.6

Downstream Dist./Dia. 416"/2.6

No. of Sampling Points 24

Stack Dimension 160"

Coupling Length 5.75

____-inch MPT/FPT/Flange

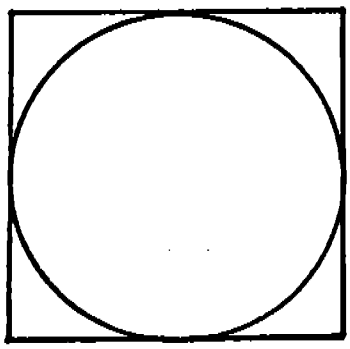

Sample Point	Dist	Sample Point	Dist	Sample Point	Dist	Sample Point	Dist
1	~~3.9~~	9.2					
2	~~16.2~~	16.5					
3	~~24.4~~	24.6					
4	~~33.9~~	34.1					
5	~~45.5~~	45.8					
6	~~62.4~~	62.7					

SAMPLING POINT RELOCATION:

Pape & Steiner Environmental Services

TEST SWPC

LOCATION Kiln 2 Baghouse

K FACTOR/NOZZLE CALCULATION

$$K = \frac{782.687(Cp)^2(1 - B_{wo})^2 P_s MW_d}{K_o^2 MW_s P_m}$$

B

ΔP	Ts
.30	380
.30	"
.38	"
.44	"
.41	"
.35	377

XEQ KC

CP	.84	O_2	9.0	MW_d	31.080
B_{wo}	.045	CO_2	17.0	K(R10)	735.602
Ps H_2O"	-.18	K_o	0.8331		
Pb	26.08				

$$N_d = \left(\frac{H\ T_s}{K\ T_m \Delta P}\right)^{.25}$$

XEQ ND

ΔP	0.38	Ideal Nozzle @ 1.1 ΔH =	0.280
T_s	379	Ideal Nozzle @ 1.8 ΔH =	0.317
T_m	75		

A

ΔP	Ts
.27	376
.36	379
.36	"
.45	"
.48	"
.50	"

$$\Delta H = K(N_d)^4 \left(\frac{T_m}{T_s}\right) (\Delta P)$$

#1853

XEQ KND

(1) Actual Nozzle I.D.	.3217	(2) Actual Nozzle I.D.	
$K(N_d)^4$(R09) =	7.879	$K(N_d)^4$(R09) =	

XEQ DH

	Nozzle 1 High	Nozzle 1 Low	Nozzle 2 High	Nozzle 2 Low
T_m in	75	75		
T_m out	75	75		
T_s	380	376		
ΔP	.51	.27		
ΔH	2.56	1.36		

AW

$\sqrt{\Delta P} = 0.6165$

$\Delta P = 0.38$

$T_s = 379$ CLΣ

HP 41CV Program 3/82
ND Revised 11/83

Pape & Steiner Environmental Services

PLANT SWPC TEST TYPE M5 FIELD TEST DATA SHEET (Page 1 of 2)

Date 2/24/87
Test Location #2 Kiln
Run Number 1
Stack Diameter 160"
Operator Sue
Filter No. 814

Barometric Pressure 26.08
Static in. wg. -.18
Probe Type/Length G-6'
Pitot Coefficient .84
Meter Box No./ 8609/.9983
Nozzle No./Size (B53)/.3217

Impinger Volumes/Weights			
Contents	Final	Initial	Net
DI	581.1	542.4	38.7
DI	536.6	528.8	7.8
Blank	454.3	453.6	0.7
S.G. silica Gel	669.6	658.2	11.4
		Total	58.6

Gas Composition			
Time	CO_2	O_2	CO
	20.2	8.9	

Leak Rate	cfm	"Hg
Initial	0.009	16.0
Final		

Sample Point	0940 Time	ΔP in wg	ΔH in wg	Gas Meter Volume Ft^3	Temperature °F Stack	Probe	Oven	Imp.	Gas Meter In	Out	Pump Vacuum in. Hg	$\sqrt{\Delta P}$	Comments
A-1	0	.28	1.35	658.709	376	257	251	21	53	51	4.0	0.529	pitot ✓OK
2	3	.26	1.27	661.115	374	248	249	21	63	55	4.0	0.510	
3	6	.36	1.77	663.391	374	246	265	17	67	55	5.0	0.600	
4	9	.40	1.98	665.947	374	252	258	20	70	56	6.0	0.632	
5	12	.48	2.37	668.682	374	250	248	21	71	56	7.0	0.693	
6	15	.35	1.75	671.9—	367	247	244	21	72	56	5.5	0.592	
B-1	18	.34	1.56	674.478	377	258	243	19	59	55	4.5	0.566	1002 Start "B"
2	21	.34	1.68	676.921	375	244	241	16	70	56	5.0	0.583	
3	24	.40	1.98	679.483	373	248	238	13	73	56	6.0	0.632	
4	27	.40	1.99	682.277	373	246	236	13	74	57	6.0	0.632	
5	30	.42	2.10	685.094	370	241	238	11	75	58	6.5	0.648	
6	33	.38	1.91	687.968	366	247	238	11	76	59	6.0	0.616	
	36			690.746									

17794

17796 17795

Pape & Steiner Environmental Services

PLANT SWPC TEST TYPE MS FIELD TEST DATA SHEET (Page 2 of 21)

Date 2/24/87
Test Location #2 Kiln
Run Number 1
Stack Diameter 160"
Operator Sme
Filter No. 814

Barometric Pressure 26.08
Static in. wg. -.18
Probe Type/Length G-6'
Pitot Coefficient .84
Meter Box No./γ 1.009/.9983
Nozzle No./Size 1853/.3217

Impinger Volumes/Weights			
Contents	Final	Initial	Net
S.G.			
		Total	

Gas Composition			
Time	CO_2	O_2	CO
Leak Rate		cfm	"Hg
Initial			
Final		0.013	8.0

Sample Point	1025 Time	ΔP in wg	ΔH in wg	Gas Meter Volume Ft^3	Temperature °F Stack	Probe	Oven	Imp.	Gas Meter In	Out	Pump Vacuum in. Hg	$\sqrt{\Delta P}$	Comments
C-1	0	.24	1.18	690.746	372	258	245	16	62	58	3.5	0.490	
2	3	.21	1.04	692.828	372	259	247	19	71	60	3.0	0.458	
3	6	.18	0.90	694.878	371	262	258	23	74	61	3.0	0.424	
4	9	.18	0.90	696.801	371	256	251	23	75	61	3.0	0.424	
5	12	.14	0.70	698.720	372	254	257	25	75	61	2.5	0.374	
6	15	.10	0.50	700.458	370	255	254	26	75	62	2.0	0.316	
D-1	18	.24	1.19	702.961	371	256	254	23	63	59	3.5	0.490	1047 start D
2	21	.24	1.19	704.111	376	253	252	18	73	60	3.5	0.490	
3	24	.22	1.09	706.258	381	251	256	18	75	61	3.5	0.469	
4	27	.20	0.99	708.357	381	250	253	20	77	61	3.0	0.447	
5	30	.22	1.09	710.381	381	248	257	20	77	63	3.5	0.469	
6	33	.24	1.19	712.470	380	242	247	23	77	63	3.5	0.490	
	36			714.666									
			1.40	55.957	373.79				64	52		0.5240	

658.709

Pape & Steiner Environmental Services

PLANT Sid PC TEST TYPE M5 FIELD TEST DATA SHEET (Page 1 of 2)

Date 2/24/87
Test Location #2 Kiln
Run Number 2
Stack Diameter 160"
Operator SWC
Filter No. 815

Barometric Pressure 26.04
Static in. wg. -.18
Probe Type/Length 6-6'
Pitot Coefficient .84
Meter Box No./ 8609/.9983
Nozzle No./Size 1853/.3217

Impinger Volumes/Weights			
Contents	Final	Initial	Net
H_2O	595.6	558.1	37.5
H_2O	555.3	545.9	9.4
Blank	426.4	425.2	1.2
S.G.	684.2	671.7	12.5
		Total	60.6

Gas Composition			
Time	CO_2	O_2	CO
	20.15	8.75	

Leak Rate	cfm	"Hg
Initial	0.014	10.0
Final		

Sample Point	1134 Time	ΔP in wg	ΔH in wg	Gas Meter Volume Ft^3	Temperature °F Stack	Probe	Oven	Imp.	Gas Meter In	Out	Pump Vacuum in. Hg	$\sqrt{\Delta P}$	Comments
D-1	0	.24	1.18	715.172	377	266	246	31	63	59	4.0	0.490	pitot ✓ OK
2	3	.24	1.18	717.4-	385	261	248	33	72	60	4.0	0.490	
3	6	.21	1.03	719.611	385	261	252	33	73	61	3.5	0.458	
4	9	.21	1.03	721.911	384	256	247	35	74	61	3.5	0.458	
5	12	.23	1.13	724.052	385	247	244	35	75	61	4.0	0.480	
6	15	.20	0.99	726.312	380	248	249	34	75	60	3.5	0.447	
C-1	18	.24	1.18	728.279	376	247	245	33	68	59	4.0	0.490	1156 - "C"
2	21	.21	1.04	730.509	378	251	252	37	73	60	3.5	0.458	
3	24	.18	0.89	732.442	382	261	255	40	75	60	3.5	0.424	
4	27	.18	0.89	734.371	382	261	255	42	76	60	3.5	0.424	
5	30	.15	0.74	736.274	382	257	259	43	76	61	3.0	0.387	
6	33	.12	0.60	738.051	378	263	254	43	76	61	2.5	0.346	
	3p			739.672									

Pape & Steiner Environmental Services

PLANT SWPC TEST TYPE M5 FIELD TEST DATA SHEET (Page 2 of 2)

Date 2/24/87
Test Location #2 Kiln
Run Number 2
Stack Diameter 160
Operator JME
Filter No. 815

Barometric Pressure 26.04
Static in. wg. -.18
Probe Type/Length G-6'
Pitot Coefficient .84
Meter Box No./γ 609/.9983
Nozzle No./Size 853/.3217

Impinger Volumes/Weights				Gas Composition			
Contents	Final	Initial	Net	Time	CO_2	O_2	CO
				Leak Rate		cfm	"Hg
				Initial			
S.G.							
		Total		Final		0.014	14.0

Sample Point	Time	ΔP in wg	ΔH in wg	Gas Meter Volume Ft^3	Temperature °F Stack	Probe	Oven	Imp.	Gas Meter In	Out	Pump Vacuum in. Hg	$\sqrt{\Delta P}$	Comments
	0	.36	1.79	739.612	376	251	244	35	64	60	6.0	0.600	
	3	.40	1.97	742.277	383	255	240	35	73	61	7.0	0.632	
	6	.42	2.08	745.074	381	257	244	36	76	62	7.5	0.648	
	9	.46	2.28	747.969	381	254	248	36	77	62	8.5	0.678	
	12	.46	2.29	750.958	379	251	243	36	77	63	8.5	0.678	
	15	.32	1.60	753.899	376	248	246	36	76	62	6.0	0.566	17805
	18	.32	1.58	756.462	376	252	260	36	69	61	5.5	0.566	17804
	21	.36	1.79	758.983	376	257	258	37	74	62	6.5	0.600	
	24	.42	2.09	761.666	379	255	261	37	77	63	7.5	0.648	17803
	27	.46	2.29	764.538	379	259	258	38	77	63	8.5	0.678	
	30	.50	2.49	767.511	379	257	264	39	77	64	9.5	0.707	17799
	33	.40	1.99	770.603	376	255	259	39	75	63	7.5	0.632	17797
	36			773.407									
													17798
			1.50	58.235	379.79				67	44		0.5412	

715.172

Pape & Steiner Environmental Services

PLANT SWPC TEST TYPE M5 FIELD TEST DATA SHEET (Page 1 of 2)

Date 2/24/87
Test Location #2 Kiln
Run Number 3
Stack Diameter 160"
Operator Sme
Filter No. 816

Barometric Pressure 26.00
Static in. wg. -.18
Probe Type/Length 6-6'
Pitot Coefficient .84
Meter Box No./γ 6019/.9983
Nozzle No./Size 1853/.3217

Impinger Volumes/Weights			
Contents	Final	Initial	Net
H2O	580.0	544.5	35.5
H2O	542.8	531.9	10.9
Blank	454.7	453.2	1.5
S.G.	651.3	638.5	12.8
		Total	60.7

Gas Composition			
Time	CO_2	O_2	CO

Leak Rate	cfm	"Hg
Initial	0.013	14.0
Final		

Sample Point	1340 Time	ΔP in wg	ΔH in wg	Gas Meter Volume Ft^3	Temperature °F Stack	Probe	Oven	Imp.	Gas Meter In	Out	Pump Vacuum in. Hg	$\sqrt{\Delta P}$	Comments
A-1	0	.32	1.56	773.957	371	246	247	33	55	56	4.5	0.566	pitot ✓ OK
2	3	.38	1.87	776.699	376	248	249	30	67	57	5.5	0.616	
3	6	.38	1.88	779.441	376	253	248	28	72	57	5.5	0.616	
4	9	.46	2.28	782.179	375	261	254	30	73	58	6.5	0.678	
5	12	.50	2.48	785.133	375	257	251	31	74	58	7.5	0.707	
6	15	.44	2.20	788.183	370	248	255	33	74	59	7.0	0.663	
B-1	18	.30	1.47	791.156	373	246	249	31	59	57	4.5	0.548	1402-"B"
2	21	.38	1.89	793.668	371	242	251	32	70	58	5.5	0.616	
3	24	.42	2.10	796.371	370	253	250	32	74	59	6.5	0.648	
4	27	.46	2.30	799.247	370	257	246	31	75	59	7.0	0.678	
5	30	.46	2.30	802.222	370	261	250	31	75	59	7.0	0.678	
6	33	.36	1.81	805.177	367	260	251	32	75	59	5.5	0.600	
	36			807.876									

^{3}17800
17801
^{3}
^{3}17802

Pape & Steiner Environmental Services

PLANT JWPC TEST TYPE M5 FIELD TEST DATA SHEET (Page 2 of 2)

Date 2/24/87
Test Location #2 Kiln
Run Number 3
Stack Diameter 16.0
Operator Eve
Filter No.

Barometric Pressure
Static in. wg.
Probe Type/Length
Pitot Coefficient
Meter Box No./γ
Nozzle No./Size

Impinger Volumes/Weights			
Contents	Final	Initial	Net
S.G.			
		Total	

Gas Composition			
Time	CO_2	O_2	CO
Leak Rate		cfm	"Hg
Initial			
Final		0.011	11

Sample Point	1426 Time	ΔP in wg	ΔH in wg	Gas Meter Volume Ft^3	Temperature °F Stack	Probe	Oven	Imp.	Gas Meter In	Out	Pump Vacuum in. Hg	$\sqrt{\Delta P}$	Comments
C-1	0	.18	0.89	807.876	367	258	255	30	59	57	2.5	0.424	
2	3	.18	0.90	809.846	368	256	253	29	69	59	2.5	0.424	
3	6	.18	0.90	811.831	368	248	258	30	72	59	2.5	0.424	
4	9	.15	0.75	813.727	367	241	256	30	73	59	2.0	0.387	
5	12	.12	0.61	815.498	361	244	257	30	72	59	2.0	0.346	
6	15	.11	0.55	817.148	360	245	259	30	72	58	1.5	0.332	
D 1	18	.21	1.04	818.682	360	240	252	29	59	56	3.0	0.458	
2	21	.21	1.05	820.711	362	249	259	26	70	57	3.0	0.458	
3	24	.18	0.91	822.891	358	251	257	26	72	57	3.0	0.424	
4	27	.20	1.01	824.727	358	255	251	27	72	58	3.5	0.447	
5	30	.20	1.01	826.809	358	256	254	27	73	58	3.5	0.447	
6	33	.18	0.92	828.818	354	253	256	28	73	58	3.0	0.424	
	36			830.773									
	T/A		1.45	56.8160	366.88				63.96			0.5256	

773.957

Pape & Steiner Environmental Services

CONTINUOUS MONITOR DATA SHEET

Plant SWPC Kiln 2

Date 2-24-87 Run No. 1, 2

Test Location Baghouse

Operator [illegible]

Fuel Type Coal Trailer No. 2

APCD Witness/Number

Generator Type Kiln 2

Burner Type

O_2 Controller Type

Gas Cylinder Nos. NOx 13472, SO2 13435, CO/CO2 584

Time	Sample Point	Fuel Flow	Dry Uncorrected O_2 %	Dry Uncorrected CO_2 %	Dry Uncorrected CO ppm	Dry Uncorrected SO_2 ppm	Dry Uncorrected NO ppm	Dry Uncorrected NO_x ppm	3% O_2 Dry ppm	3% O_2 Dry NO_x ppm	Hydrocarbons THC	Hydrocarbons CH_4	Hydrocarbons Non CH_4	Kiln feed			Comments
0930	Initial Cal		8.06	15.03	400.1	51.9		807.8									
			0			50.5		800									Extend response
			20.7														Air
0955			9.6	19.2	350	2		640						190			Test 1
1005			9.0	20.0	450	1		660									
1015			8.88	20.5	550	2		672						215			TPH Feed 206
1025			8.7	20.7	650	2		660									+ Coal
1035			8.7	20.6	550	2		640									
1045			8.8	20.3	450	2		630						215			
1055	Cal check		-0.1	0	-2	0		-5									Zero
			8.3	~~399~~ 14.75	399	53		804									Span Post after check
1205			8.8	20.0	400	2		610									Test 2
1215			8.8	19.8	450	2		600									
1225			8.7	20.3	475	2		610									
1235			8.8	20.3	475	2		625									
1245			8.7	20.3	500	2		605									
1255			8.7	20.2	475	3		615									
1315	Cal check		0	-0.1	0	0		-5									Zero
			7.9	14.7	400	52		830									Span
			8.93	20.3	500.0	1.83		650.3									
			8.75	20.15	462.5	2.17		610.8									

Pape & Steiner Environmental Services

CONTINUOUS MONITOR DATA SHEET

Plant: SWPC

Date: 2-24-87 Run No.: 3

Test Location: Kiln 2 Baghouse

Operator: PAP

Fuel Type: Coal Trailer No.: 2

APCD Witness/Number:

Generator Type:

Burner Type:

O_2 Controller Type:

Gas Cylinder Nos.:

Time	Sample Point	Fuel Flow	Dry Uncorrected						3% O_2 Dry		Hydrocarbons						Comments
			O_2 %	CO_2 %	CO ppm	SO_2 ppm	NO ppm	NO_x ppm	ppm	NO_x ppm	THC	CH_4	Non CH_4				
1315	Initial Cal		8.06	15.03	400.1	51.9		802.8									Span Gas Values
1335			8.7	20.9	550	2		575									Test 3
1345			8.8	20.7	550	3		555									
1355			8.9	20.4	500	2		550									
1405			8.8	20.6	550	3		540									
1415			8.8	20.6	550	3		520									
1425			8.8	20.3	500	2		505									
1440	Cal check		0	-0.1	0	0		-5									Cal Zero
			8.1	14.8	400	53		848									Span
			0			50.5		805									External
			8.80	20.58	533.3	2.5		540.8									

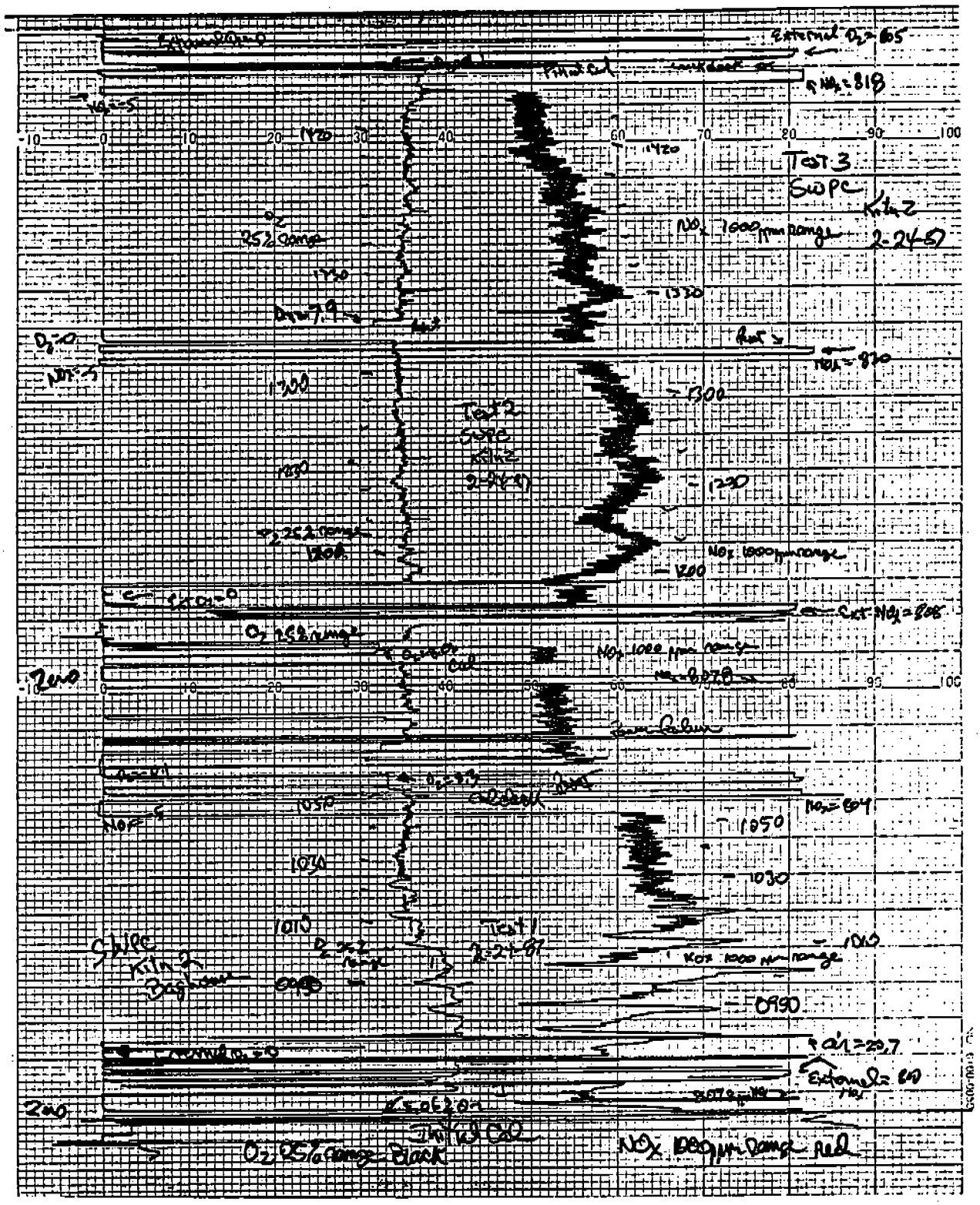
External O_2 = 805
Pitot Cal
NO_x = 818
Test 3
SWPC
Kiln 2
2-24-87
NO_x 1000 ppm range
O_2 25% range
1420
1330
O_2 = 7.9
O_2 = 0
NO_x = 830
1300
Test 2
SWPC
Kiln 2
2-24-87
1230
1200
NO_x 1000 ppm range
Ext NO_x = 808
O_2 25% range
NO_x 1000 ppm range
Zero
NO_x = 804
1050
1030
1010
Test 1
2-24-87
SWPC
Kiln 2
Baghouse
0990
O_2 25% range Black
NO_x 1000 ppm range Red

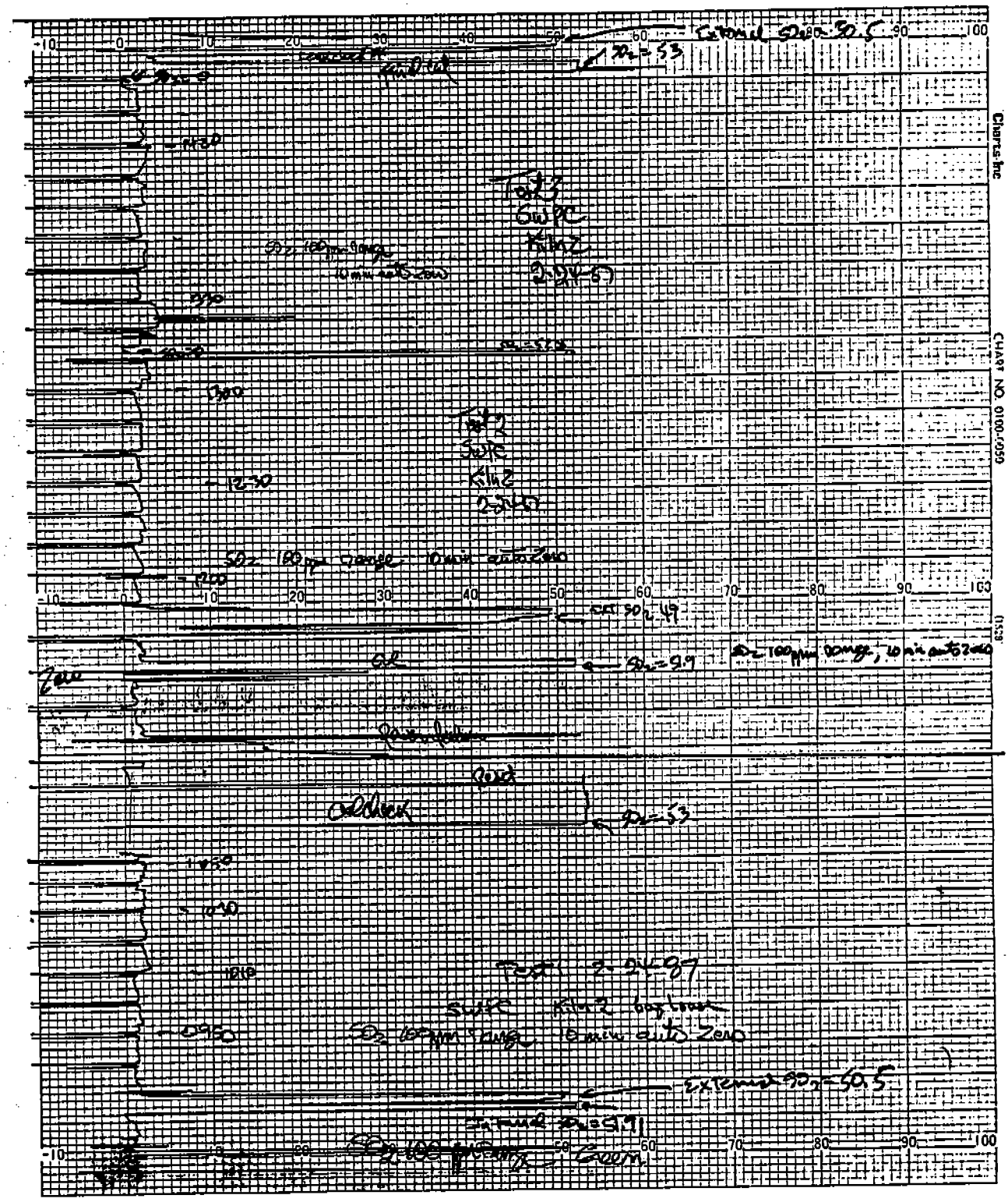

External SO2 = 50.5
SO2 = 53
Test 3
SWPC
Kiln 2
2-24-87
SO2 100 ppm range
10 min auto zero
Test 2
SWPC
Kiln 2
2-24-87
SO2 100 ppm range 10 min auto zero
Ext SO2 49
SO2 = 9.9
SO2 100 ppm range, 10 min auto zero
Zero
Oldback
SO2 = 53
Test 1 2-24-87
SWPC Kiln 2 baghouse
SO2 100 ppm range 10 min auto zero
External SO2 = 50.5
Internal SO2 = 9.91
SO2 100 ppm range
Green
Charts Inc
CHART NO. 0100-0050

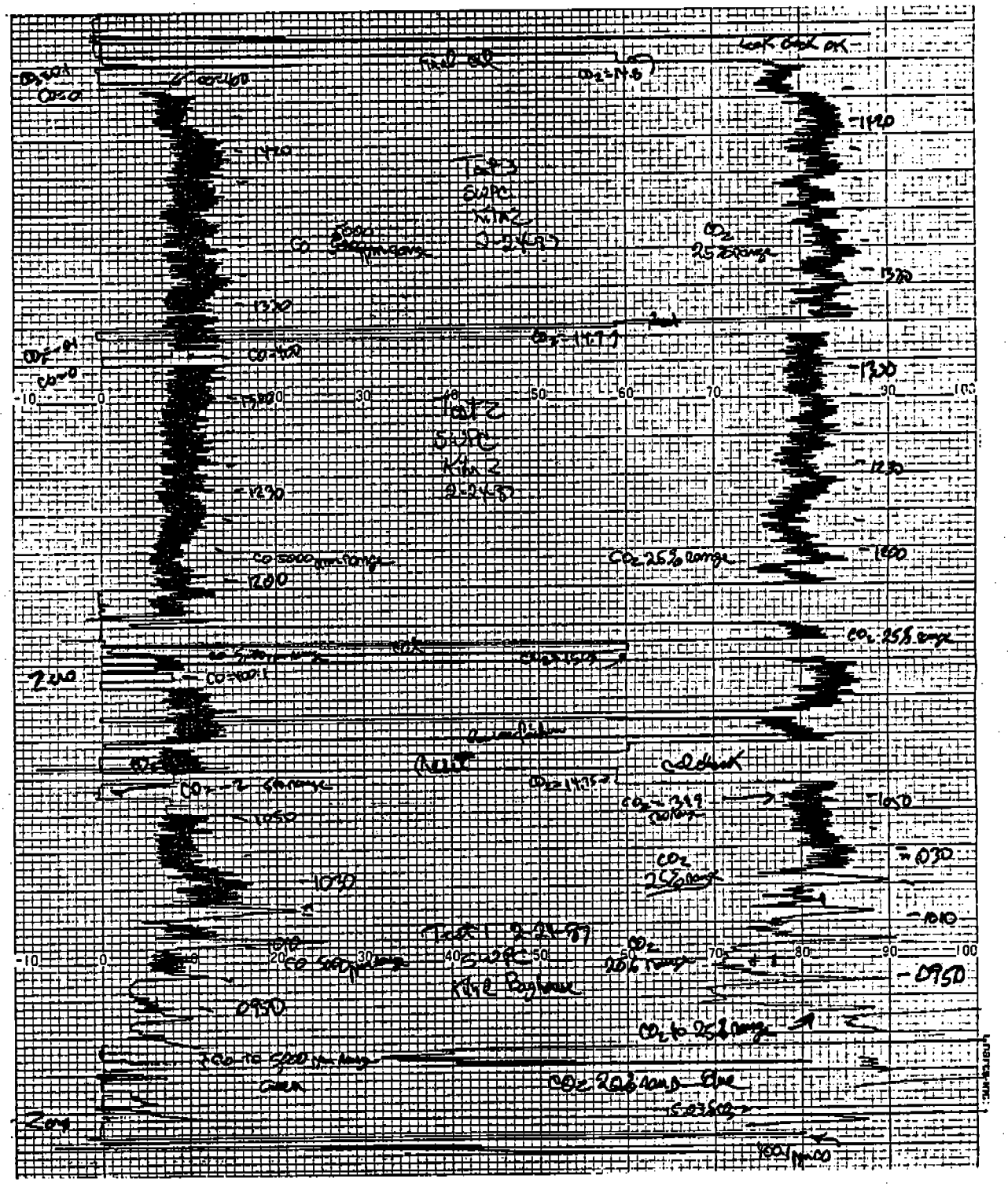

Pape & Steiner Environmental Services

SAMPLE HANDLING/LOG-IN

Date 2-24-87 Test Location SWDC Kiln 2

	Sample Type	Volume	Comments
1.	17794 5 Meth FHA Sample 1 Test	90	
2.	17795 5 Meth MF Sample 1 Test	N/A	
3.	17796 5 Meth BHW Sample 1 Test	390	
4.	17797 5 Meth FHA Sample 2 Test	79	
5.	17798 5 Meth MF Sample 2 Test	N/A	
6.	17799 5 Meth BHW Sample 2 Test	318	
7.	17800 5 Meth FHA Sample 3 Test	168	
8.	17801 5 Meth MF Sample 3 Test	N/A	
9.	17802 5 Meth BHW Sample 3 Test	405	
10.	17803 5 Meth FHA Sample Blank Test	100	
11.	17805 5 Meth BHW Sample Blank Test	N/A	
12.	17804 5 Meth MF Sample Blank Test	100	

CHAIN OF CUSTODY

JP

JP 3/2

Pape & Steiner Environmental Services

ANALYTICAL REPORT

SAMPLE TYPE Front Half Wash
SAMPLE COMPONENT Acetone
REQUESTED BY SWPC
ANALYTICAL METHOD Gravimetric

DATE 3/4/87
ANALYST JP

Sample ID No.	Test No. #	Sample Volume mls	Sample Aliquot	Titer mls or (Absorbance)	Analytical Result (total sample) gms	
					Uncorrected	Blank corrected
	1	90			0.00801	0.00750
	2	79			0.00583	0.00538
	3	168			0.00874	0.00778
	Bl	100			0.00057	

JP

Pape & Steiner Environmental Services

ANALYTICAL REPORT

SAMPLE TYPE Filterable Particulate
DATE 3/4/87
SAMPLE COMPONENT 100mm Filter
ANALYST JP
REQUESTED BY SWCP
ANALYTICAL METHOD Gravimetric

Sample ID No. Filter #	Test No. #	Sample Volume	Sample Aliquot	Titer mls or (Absorbance)	Analytical Result (total sample) gms.	
					Uncorrected	Blank corrected
10-814	1				0.00050	0.00051
10-815	2				0.00174	0.00175
10-816	3				0.00136	0.00137
10-817	Bl				-0.00001	

JP

Pape & Steiner Environmental Services

ANALYTICAL REPORT

SAMPLE TYPE Condensible Particulates DATE 3/4/87

SAMPLE COMPONENT ANALYST JP

REQUESTED BY SWPC

ANALYTICAL METHOD Gravimetric

Sample ID No.	Test No. #	Sample Volume mls	Sample Aliquot mls	Titer mls or (Absorbance)	Analytical Result (total sample) gms. Uncorrected	Blank corrected
Analysis in Tin	1	390	100		0.01928	0.07504 ✓
	2	318	100		0.01931	0.06128 ✓
	3	405	100		0.00984	0.03969 ✓
	Bl	100	100		0.00004	
Analysis in Glass	1	390				.0041
	2	318				.0034
	3	405				.0043
						.0118

JP

Pape & Steiner Environmental Services

ISOKINETIC CALCULATIONS

Standard temperature, S_t 60 (XEQ 60 or 68); 29.92 inches Hg

Test 1 Date 2-24-87 Location SWPC Kiln 2 Baghouse

T_m	64.52	V_m	55.957	O_2	8.9	Stack ID "	160
T_s	373.79	γ	.9983	CO_2	20.2	Stack Area Ft^2	139.63
$\sqrt{\Delta P}$	.5240	P_b	26.08	Static	-.18	Test Time	72
ΔH	1.40	V_{1c}	58.6	C_p	.84	N_d	.3217

1. Volume of dry gas sampled at standard conditions (dscf)
(R-17)

$$V_{m,std} = \left(\frac{S_t + 460}{29.92}\right)(\gamma)V_m\left(\frac{P_b + \frac{\Delta H}{13.6}}{T_m + 460}\right) = 48.4632$$

2. Stack gas moisture condensed at standard conditions (scf)
(R-18)
($V_{m,std} + V_{w,std}$; R-04)

$$V_{w,std} = 8.9148 \times 10^{-5}(S_t + 460)(V_{1c}) = 2.7165$$

3. Stack gas proportion of water vapor, by volume
(R-19)

$$B_{wo} = \frac{V_{w,std}}{V_{w,std} + V_{m,std}} = .0531$$

4. Stack gas dry molecular weight (lb/lb mole)
(R-21)

$$MW_d = 0.44(\%CO_2) + 0.32(\%O_2) + 0.28(\%N_2 + \%CO) = 31.59$$

5. Stack gas molecular weight (lb/lb mole)
(R-22)

$$MW_s = MW_d(1 - B_{wo}) + 18(B_{wo}) = 30.87$$

6. Pressure stack, in. Hg
(R-23)

$$P_s = P_b + \left(\frac{P_{static}}{13.6}\right) = 26.07$$

7. Stack gas velocity, at stack conditions (ft/sec)
(R-24)

$$V_s = 85.49(C_p)(\sqrt{\Delta P})_{avg}\sqrt{\frac{T_s + 460}{P_s(MW_s)}} = 38.31$$

8. Stack gas volume at standard conditions (dscfm)
(R-26)
(ACFM; R-25)
320,910.27

$$Q_s = 60(1 - B_{wo})V_sA_s\left(\frac{S_t + 460}{T_s + 460}\right)\left(\frac{P_s}{29.92}\right) = 165,108.21$$

9. Test percent isokinetic
(R-02)

$$\%I = \frac{9142.88(T_s + 460)(V_{w,std} + V_{m,std})}{(S_t + 460)\ \theta\ V_sP_s(D_n)^2} = 100.92$$

Pape & Steiner Environmental Services

ISOKINETIC CALCULATIONS

Standard temperature, S_t 60 (XEQ 60 or 68); 29.92 inches Hg

Test 2 Date 2/24/87 Location SWPC Kiln 2

T_m	67.44	V_m	58.235	O_2	8.75	Stack ID "	160
T_s	379.79	γ	.9983	CO_2	20.15	Stack Area Ft^2	139.63
$\sqrt{\Delta P}$	.5412	P_b	26.04	Static	-.18	Test Time	72
ΔH	1.50	V_{1c}	60.6	C_p	.84	N_d	.3217

1. Volume of dry gas sampled at standard conditions (dscf)
(R-17)

$$V_{m,std} = \left(\frac{S_t + 460}{29.92}\right)(\gamma)V_m\left(\frac{P_b + \frac{\Delta H}{13.6}}{T_m + 460}\right) = 50.0944$$

2. Stack gas moisture condensed at standard conditions (scf)
(R-18)
($V_{m,std} + V_{w,std}$; R-04)

$$V_{w,std} = 8.9148 \times 10^{-5}(S_t + 460)(V_{1c}) = 2.8092$$

3. Stack gas proportion of water vapor, by volume
(R-19)

$$B_{wo} = \frac{V_{w,std}}{V_{w,std} + V_{m,std}} = .0531$$

4. Stack gas dry molecular weight (lb/lb mole)
(R-21)

$$MW_d = 0.44(\%CO_2) + 0.32(\%O_2) + 0.28(\%N_2 + \%CO) = 31.57$$

5. Stack gas molecular weight (lb/lb mole)
(R-22)

$$MW_s = MW_d(1 - B_{wo}) + 18(B_{wo}) = 30.85$$

6. Pressure stack, in. Hg
(R-23)

$$P_s = P_b + \left(\frac{P_{static}}{13.6}\right) = 26.03$$

7. Stack gas velocity, at stack conditions (ft/sec)
(R-24)

$$V_s = 85.49(C_p)(\sqrt{\Delta P})_{avg}\sqrt{\frac{T_s + 460}{P_s(MW_s)}} = 39.74$$

8. Stack gas volume at standard conditions (dscfm)
(R-26)
(ACFM; R-25)
332963.08

$$Q_s = 60(1 - B_{wo})V_sA_s\left(\frac{S_t + 460}{T_s + 460}\right)\left(\frac{P_s}{29.92}\right) = 169,820.31$$

9. Test percent isokinetic
(R-02)

$$\%I = \frac{9142.88(T_s + 460)(V_{w,std} + V_{m,std})}{(S_t + 460)\ \theta\ V_sP_s(D_n)^2} = 101.43$$

Pape & Steiner Environmental Services

ISOKINETIC CALCULATIONS

Standard temperature, S_t 60 (XEQ 60 or 68); 29.92 inches Hg

Test 3 Date 2/24/87 Location SWPC Kiln 2

T_m	63.96	V_m	56.816	O_2	8.80	Stack ID "	160
T_s	366.88	γ	.9983	CO_2	20.58	Stack Area Ft^2	139.63
$\sqrt{\Delta P}$	.5256	P_b	26.00	Static	-1.8	Test Time	72
ΔH	1.45	V_{1c}	60.7	C_p	.84	N_d	.3217

1. Volume of dry gas sampled at standard conditions (dscf)
(R-17)

$$V_{m,std} = \left(\frac{S_t + 460}{29.92}\right)(\gamma)V_m\left(\frac{P_b + \frac{\Delta H}{13.6}}{T_m + 460}\right) = 49.1162$$

2. Stack gas moisture condensed at standard conditions (scf)
(R-18)
($V_{m,std} + V_{w,std}$; R-04)

$$V_{w,std} = 8.9148 \times 10^{-5}(S_t + 460)(V_{1c}) = 2.8139$$

3. Stack gas proportion of water vapor, by volume
(R-19)

$$B_{wo} = \frac{V_{w,std}}{V_{w,std} + V_{m,std}} = .0542$$

4. Stack gas dry molecular weight (lb/lb mole)
(R-21)

$$MW_d = 0.44(\%CO_2) + 0.32(\%O_2) + 0.28(\%N_2 + \%CO) = 31.64$$

5. Stack gas molecular weight (lb/lb mole)
(R-22)

$$MW_s = MW_d(1 - B_{wo}) + 18(B_{wo}) = 30.91$$

6. Pressure stack, in. Hg
(R-23)

$$P_s = P_b + \left(\frac{P_{static}}{13.6}\right) = 25.99$$

7. Stack gas velocity, at stack conditions (ft/sec)
(R-24)

$$V_s = 85.49(C_p)(\sqrt{\Delta P})_{avg}\sqrt{\frac{T_s + 460}{P_s(MW_s)}} = 38.30$$

8. Stack gas volume at standard conditions (dscfm)
(R-26)
(ACFM; R-25)
320,845.66

$$Q_s = 60(1 - B_{wo})V_sA_s\left(\frac{S_t + 460}{T_s + 460}\right)\left(\frac{P_s}{29.92}\right) = 165,749.47$$

9. Test percent isokinetic
(R-02)

$$\%I = \frac{9142.88(T_s + 460)(V_{w,std} + V_{m,std})}{(S_t + 460)\ \theta\ V_sP_s(D_n)^2} = 101.89$$

EMISSION RATE CALCULATIONS

1. Fuel factor at 68°F, 29.92 in. Hg (dscf/mmBtu)

$$\text{F Factor} = \frac{10^6[3.64(\%H) + 1.53(\%C) + 0.57(\%S) + 0.14(\%N) - 0.46(\%O_2)]}{\text{Btu/lb}}$$

2. Fuel factor at 60°F, 29.92 in. Hg (dscf/mmBtu)

$$\text{F Factor}_{60^o} = \text{F Factor}_{68^o}\left(\frac{60 + 460}{68 + 460}\right)$$

3. Emission concentration wet at standard conditions* (gr/scf)

$$\text{gr/scf} = 15.432\left(\frac{\text{Comp (g)}}{V_{m,std} + V_{w,std}}\right)$$

4. Emission concentration dry at standard conditions* (gr/dscf)

$$\text{gr/dscf} = 15.432\left(\frac{\text{Comp (g)}}{V_{m,std}}\right)$$

5. Emission concentration corrected to 12% CO_2

$$C\ @\ 12\%\ CO_2 = C_{measured}\left(\frac{12}{\%CO_2\ \text{measured}}\right)$$

6. Emission Rate lb/hr from gr/dscf

$$\text{lb/hr} = 0.00857(\text{gr/dscf})(Q_s)$$

7. Gaseous concentration in ppm

$$\text{ppm} = \frac{1.60864(S_t + 460)*(\text{mg comp})}{MW(V_{m,std})}$$

8. Emission rate lb/hr from ppm

$$\text{lb/hr} = \frac{8.223 \times 10^{-5}(Q_s)(MW)(\text{ppm})}{(S_t + 460)*}$$

9. Emission concentration corrected to 3% O_2

$$\text{ppm}\ @\ 3\%\ O_2 = \text{ppm measured}\left(\frac{20.9 - 3}{20.9 - \%O_2\ \text{measured}}\right)$$

*Standard temperature to be defined

EMISSION RATE CALCULATIONS
(Concluded)

10. Emission factor, lb/mmBtu at 0% O_2

$$\text{lb/mmBtu} = F(1.4286 \times 10^{-4}) \left(\frac{20.9}{20.9 - \%O_2}\right) (\text{gr/dscf})$$

$$\text{lb/mmBtu} = F(MW)\left(\frac{1.3711 \times 10^{-6}}{S_t + 460^*}\right)\left(\frac{20.9}{20.9 - \%O_2}\right) (\text{ppm})$$

11. Heating value of fuel, mmBtu/bbl

$$\text{mmBtu/bbl} = 349.786 \times 10^{-6}(\text{Btu/lb})(\text{SpGr})$$

12. Emission Factor, lb/bbl

$$\text{lb/bbl} = (\text{lb/mmBtu})(\text{mmBtu/bbl})$$

13. Brake Specific Emission Rate = grams per brake horsepower hour

$$= (\text{lb/MMbtu})(453.592 \times 10^{-6})(\text{Btu/brake horsepower hour})$$

14. Maximum Mass Emission Rate (lb/hr)

$$= (\text{grams/BHP hr})(\text{maximum BHP})(1 \text{ lb}/453.592 \text{ g})$$

15. Kilograms per thousand Barrels of Feed (Kg/Kbbl)

$$= \frac{\text{lb/hr emission } (10.8864)}{\text{KBPD Feed}}$$

*Standard temperature to be defined

Pape & Steiner Environmental Services

EMISSION RATE DATA

Standard Temperature, S_t 60 (60°F or 68°F); 29.92 inches Hg

LOCATION SwPC Kiln 2 baghouse

DATA	Test 1	Test 2	Test 3	Average
$V_{m,std}$	48.4632	50.0944	49.1162	49.2246
Bwo	.0531	.0531	.0542	.0535
Qs	165108.21	169820.31	165749.47	166892.66
O_2	8.93	8.75	8.80	8.83
CO_2	20.20	20.15	20.58	20.31
F-Factor				
LAB DATA				
Front Half Wash g	.00750 .00801	.00538 .00713	.00778 .00915	
Mass Filter g	.00051	.00175	.00137	
inglass* Back Half Catch g	.0041	.0034	.0043	
Front Half Sulfate, mg H_2SO_4				
Back Half Sulfate, mg H_2SO_4				
H_2O_2 Catch mg H_2SO_4				
RESULTS				
Filt. Particulate gr/dscf	.0026	.0022	.0029	.0026
gr/dscf @ 12% CO_2	.0015	.0013	.0017	.0015
gr/scf	.0024	.0021	.0027	.0024
lb/hr	3.61	3.20	4.08	3.63
lb/MMBtu				
Total Particulate gr/dscf	.0039	.0032	.0042	.0038
gr/dscf @ 12% CO_2	.0023	.0019	.0025	.0022
gr/scf	.0037	.0031	.0040	.0036
lb/hr	5.46	4.72	6.00	5.39
lb/MMBtu				
Total Sulfate gr/dscf				
gr/dscf @ 12% CO_2				
gr/scf				
lb/hr				
lb/MMBtu				
lb/MMBtu as Sulfur				
SO_3 ppm				
ppm, wet				
lb/hr				
SO_2 ppm				
ppm, wet				
lb/hr				
lb/MMBtu				
lb/MMBtu, as Sulfur				

BPR23

Pape & Steiner Environmental Services

TEST SwPC

LOCATION Kiln 2

CM SO_2, NO_x, HC, CO EMISSION RATE DATA

Standard Temperature, S_t 60 (XEQ 60 or 68); 29.92 inches Hg

ENTER			Test 1	Test 2	Test 3	Average
R-22	O_2	%	8.93	8.75	8.80	8.83
R-26	Q_s		165108.21	169820.31	165749.47	166892.66
R-15	NO_x	ppm	650.3	610.8	540.8	600.63
R-15	SO_2	ppm	1.83	2.17	2.50	2.17
R-15	CO	ppm	500.0	462.5	533.3	498.6
R-15	HC	ppm				

XEQ FF

XEQ SO_2 F-FACTOR

RESULTS:

MW = 46					
NO_x	lb/hr	781.04	754.53	652.04	729.20
NO_x	ppm @ 3% O_2	972.46	899.86	800.03	890.78
NO_x	lb/MMBtu				
NO_x	lb/Bbl				
MW = 64.1					
SO_2	lb/hr	3.06	3.74	4.20	3.67
SO_2	ppm @ 3% O_2				
SO_2	lb/MMBtu				
SO_2	lb/Bbl				
MW = 28					
CO	lb/hr	365.53	347.77	391.39	368.23
CO	ppm @ 3% O_2				
CO	lb/MMBtu				
CO	lb/Bbl				
MW = 16					
HC	lb/hr				
HC	ppm @ 3% O_2				
HC	lb/MMBtu				
HC	lb/Bbl				

Pape & Steiner Environmental Services

DRY GAS METER/ORIFICE METER CALIBRATION DATA

Date 2/6/87 Dry Gas Meter No. 56001

Barometric Pressure, in. Hg 29.80 Standard Test Meter No. 69279

Meter Box No. 3ID 609 Operator CARTER

	Standard Test Meter			Meter Box				Time	γ	K_o
	Pres. ΔH_s ("Wg)	Temp. T_s (°F)	Volume V_s (Ft^3)	Pres. ΔH ("Wg)	Temp. T_{di}	T_{do} (°F)	Volume V_d (Ft^3)	(min)		
		75	119.299		108	92	952.152			
	-2.3	72	97.637	0.5	101	90	929.459	46	0.9911	0.8554
		73.5	21.662		97.25		22.693			
		73	95.940		109	88	927.684			
	-3.9	73	73.1663	1.0	102	82	904.556	34	0.9913	0.8339
		73	22.277		95	25	23.128			
		75	147.675		115	93	975.343			
29.83	-5.2	75	120.856	1.5	112	92	953.751	26	0.9980	0.8319
		75	20.819		103		21.592			
		75	167.883		118	94	1002.284			
29.83	-6.6	75	144.803	2.0	117	93	978.553	25	1.0063	0.8280
		75	23.080		105.5		23.731			
		75	189.609		119	94	24.483			
29.83	-9.1	75	169.401	3.0	117	94	3.835	18	1.0047	0.8163
		75	20.208		106.0		20.648			
				4.0						

Average 0.9983 0.8331

Std.Dev. 0.0072 (0.7%) 0.0142 (1.7%)

$$\gamma = \frac{V_s\left(P_{bar} + \frac{\Delta H_s}{13.6}\right)\left(\frac{T_{di} + T_{do}}{2} + 460\right)}{V_d\left(P_{bar} + \frac{\Delta H}{13.6}\right)\left(T_s + 460\right)}$$

$$K_o = \frac{\left(\frac{V_s}{t}\right)\left(\frac{T_{do}}{T_s}\right)\left(\frac{P_{bar} + \frac{\Delta H_s}{13.6}}{P_{bar} + \frac{\Delta H}{13.6}}\right)}{\left(\frac{T_{do}\,\Delta H}{\left(P_{bar} + \frac{\Delta H}{13.6}\right)\left(M_m\right)}\right)^{0.5}}$$

where

ΔH_s = Standard meter pressure drop

T_s = Standard meter temperature

V_s = Standard test meter dry gas volume

ΔH = Meter box orifice meter pressure drop

T_{di} = Meter box inlet temperature

T_{do} = Meter box outlet temperature

V_d = Meter box dry gas volume

γ = Meter box correction factor

K_o = Orifice meter calibration constant

t = Calibration time in minutes

M_m = Molecular weight of air (28.96 lb/lb-mole)

P_{bar} = Barometric pressure

Pape & Steiner Environmental Services

NOZZLE CALIBRATION DATA

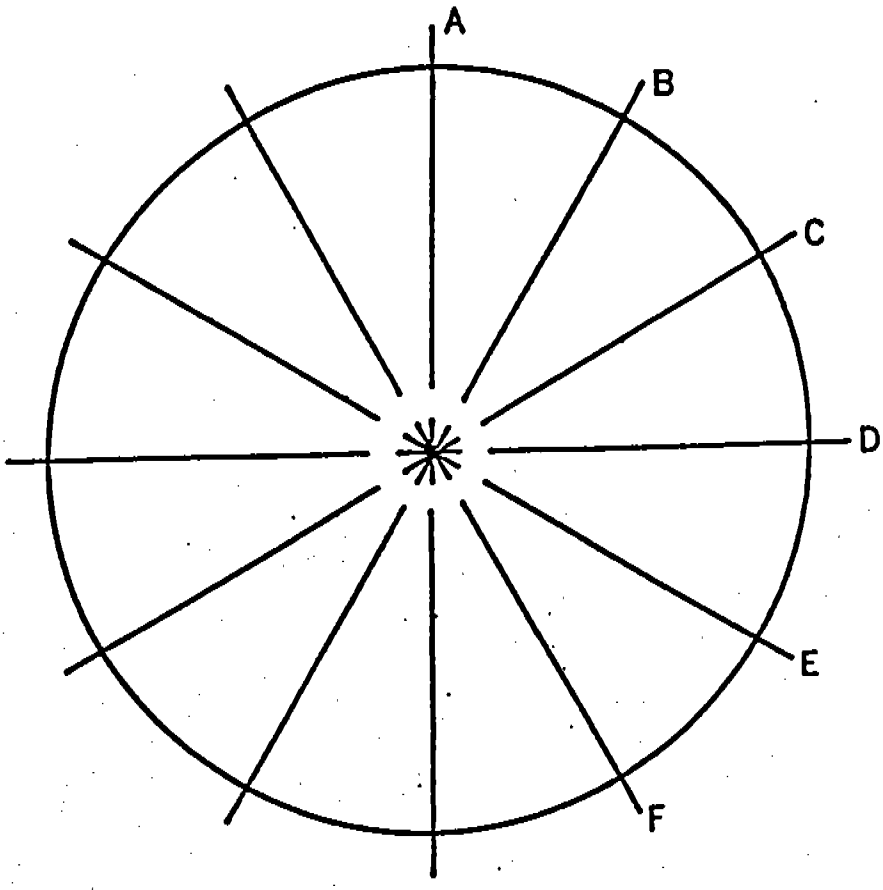

DIAMETER (in.)

A .3205

B

C .3225

D .3228

E .3208

F

AVG. .3217

DATE 2-19-86

NOZZLE NO. 18153

OPERATOR JCO

Scott Specialty Gases

a division of Scott Environmental Technology, Inc.

2600 CAJON BLVD. SAN BERNARDINO, CA 92411 PHONE (714) 887-2571

PAPE & STEINER
5801 Norris Road
Bakersfield, CA 93308
Attn: Sue Powers

Date Shipped 1-16-87
Our Project No: 404936
Your P.O. No: SP 8864
Page 1 of 1

CERTIFICATE OF ANALYSIS – EPA PROTOCOL GASES*

(Concentrations are in mole % or ppm)

Cylinder Number AAL13472 Certified Accuracy ±1 % NBS Traceable Analysis Dates: First 01-06-87 Last 01-16-87

COMPONENTS	CERTIFIED CONC	EXPIRATION DATE	ANALYTICAL PRINCIPLE	PRIMARY STANDARD NBS/SRM's	REPLICATE CONCENTRATIONS FIRST	SECOND
NITRIC OXIDE	807.8 ppm	07-16-87	CHEM.	16878	810.6 ppm	807.8 ppm
NOX	813.1 ppm				813.6 ppm	813.1 ppm
NITROGEN	BALANCE					

A-28

Cylinder Number _____ Certified Accuracy _____ % NBS Traceable Analysis Dates: First _____ Last _____

COMPONENTS	CERTIFIED CONC	EXPIRATION DATE	ANALYTICAL PRINCIPLE	PRIMARY STANDARD NBS/SRM's	REPLICATE CONCENTRATIONS FIRST	SECOND

*We hereby certify the cylinder gas has been analyzed according to EPA Protocol No: 1

Analyst _____ Approved By [signature]

The only liability of this Company for gas which fails to comply with this analysis shall be replacement thereof by the Company without extra cost.

CERTIFIED REFERENCE MATERIALS ■ EPA PROTOCOL GASES ■ ACUBLEND® ■ CALIBRATION & SPECIALTY GAS MIXTURES
PURE GASES ■ ACCESSORY PRODUCTS ■ CUSTOM ANALYTICAL SERVICES

TROY, MICHIGAN / PLUMSTEADVILLE, PENNSYLVANIA

Scott Specialty Gases

a division of Scott Environmental Technology, Inc.

2600 CAJON BLVD. SAN BERNARDINO, CA 92411 PHONE (714) 887-2571

PAPE & STEINER
5801 Norris Road
Bakersfield, CA 93308
Attn: Sue Powers

Date Shipped 10-9-86
Our Project No: 403865
Your P.O. No: SP6615
Page 3 of 7

CERTIFICATE OF ANALYSIS – EPA PROTOCOL GASES*

(Concentrations are in mole % or ppm)

Cylinder Number AAL13435 Certified Accuracy ±1 % NBS Traceable Analysis Dates: First 09-29-86 Last 10-08-86

COMPONENTS	CERTIFIED CONC	EXPIRATION DATE	ANALYTICAL PRINCIPLE	PRIMARY STANDARD NBS/SRM's	REPLICATE CONCENTRATIONS FIRST	SECOND
SULFUR DIOXIDE	51.91 ppm	04-08-87	U.V.	1694	51.91 ppm	51.91 ppm
NITROGEN	BALANCE				BALANCE	BALANCE

A-29

Cylinder Number _____ Certified Accuracy _____ % NBS Traceable Analysis Dates: First _____ Last _____

COMPONENTS	CERTIFIED CONC	EXPIRATION DATE	ANALYTICAL PRINCIPLE	PRIMARY STANDARD NBS/SRM's	REPLICATE CONCENTRATIONS FIRST	SECOND

*We hereby certify the cylinder gas has been analyzed according to EPA Protocol No: 1

Analyst _____ Approved By _____

The only liability of this Company for gas which fails to comply with this analysis shall be replacement thereof by the Company without extra cost.

CERTIFIED REFERENCE MATERIALS ■ EPA PROTOCOL GASES ■ ACUBLEND® ■ CALIBRATION & SPECIALTY GAS MIXTURES
PURE GASES ■ ACCESSORY PRODUCTS ■ CUSTOM ANALYTICAL SERVICES

TROY, MICHIGAN / PLUMSTEADVILLE, PENNSYLVANIA

Scott Specialty Gases a division of Scott Environmental Technology, Inc.
PLUMSTEADVILLE, PA. 18949 PHONE: (215) 766-8861 TWX: 510-665-9344
SAN BERNARDINO, CA 714-887-2571

Date: 9-12-86
Our Project No.: 403673
Your P.O. No.: SP5203

PAPE & STEINER
5801 Norris Road
Bakersfield, CA 93308
Attn: Linda

Gentlemen:

Thank you for choosing Scott for your Specialty Gas needs. The analyses for the gases ordered, as reported by our laboratory, are listed below. Results are in volume percent, unless otherwise indicated.

ANALYTICAL REPORT

Cyl. No. AAL584 Analytical Accuracy ±1%

Component	Concentration
CARBON MONOXIDE	400.1ppm
NBS TRACEABLE TO SRM 1680B	
CARBON DIOXIDE	15.03%
OXYGEN	8.060%
NITROGEN	BALANCE

Cyl. No. _____ Analytical Accuracy _____

Component	Concentration

Cyl. No. _____ Analytical Accuracy _____

Component	Concentration

Cyl. No. _____ Analytical Accuracy _____

Component	Concentration

CERTIFIED

Analyst _____

Approved By Doug Smith

The only liability of this Company for gas which fails to comply with this analysis shall be replacement thereof by the Company without extra cost.

FINAL DATA RUN - SWPC

QUARRY PLT

KILN #2

HOURLY AVERAGE 87 FEB 24 15:01

TIME HOUR ENDING	FIC-309 K2 FEED RATE TPH	FIC-471 K2 COAL RATE TPH	FIC-472 PYROCOAL RATE TPH	SIC-337 PREHEATR ID FAN RPM	JI-313 PREHEATR ID FAN KW	SI-371 K2 BGHSE EXHT FAN RPM	JI-314 K2 BGHSE EXHT FAN KW	TI-450 K2 BURNG ZONE DEGF
15:01 TRI3	205.0	7.400	7.200	747.0	1092.	693.0	674.7	2400.
14:01	217.5	7.599	7.799	783.0	1222.	711.0	709.3	2560.
13:01 TRI2	215.0	7.699	7.799	801.0	1300.	711.0	726.6	2620.
12:01	212.5	7.699	7.900	809.9	1352.	720.0	743.9	2560.
11:01 TRI1	212.5	7.599	8.100	792.0	1274.	702.0	709.3	2580.
10:01	172.5	7.599	5.900	711.0	961.9	693.0	657.3	2680.
09:01	167.5	7.000	6.099	711.0	936.0	693.0	640.1	2340.
08:01	177.5	6.300	6.199	702.0	909.9	693.0	640.1	2460.
07:01	192.5	7.500	6.600	747.0	1066.	702.0	674.7	2600.
06:01	190.0	7.599	6.499	737.9	1040.	693.0	657.3	2600.
05:01	192.5	7.599	6.700	747.0	1066.	702.0	674.7	2620.
04:01	180.0	7.599	6.199	693.0	883.9	675.0	622.8	2660.
03:01	175.0	7.599	6.000	684.0	832.0	684.0	622.8	2620.
02:01	200.0	7.599	7.100	747.0	1092.	702.0	674.7	2380.
01:01	217.5	7.599	7.900	783.0	1222.	702.0	692.0	2560.
00:01	217.5	7.599	8.100	809.9	1326.	711.0	709.3	2580.
23:01	215.0	7.500	8.100	809.9	1326.	720.0	726.6	2620.
22:01	215.0	7.500	8.100	809.9	1326.	720.0	726.6	2700.
21:01	210.0	7.500	8.000	809.9	1300.	720.0	726.6	2580.
20:01	217.5	7.400	8.100	809.9	1300.	711.0	709.3	2560.
19:01	217.5	7.400	8.000	809.9	1300.	711.0	709.3	2620.
18:01	217.5	7.400	8.000	809.9	1300.	711.0	709.3	2680.
17:01	217.5	7.400	8.000	809.9	1300.	711.0	692.0	2700.
16:01	215.0	7.400	7.900	783.0	1196.	702.0	692.0	2640.