Cape Girardeau
coal precal

KVB REPORT NO.

AP-42 Section 11.6
Reference 54
Report Sect. 4
Reference 52

Note: This is a reference cited in *AP 42, Compilation of Air Pollutant Emission Factors, Volume I Stationary Point and Area Sources.* AP42 is located on the EPA web site at www.epa.gov/ttn/chief/ap42/

The file name refers to the reference number, the AP42 chapter and section. The file name "ref02_c01s02.pdf" would mean the reference is from AP42 chapter 1 section 2. The reference may be from a previous version of the section and no longer cited. The primary source should always be checked.

ASSESSMENT OF SULFUR LEVELS

CAPE GIRARDEAU, MO

Raw = 2.19
Factor 1.54
clinker: 1.42 (.6494)

Mike Harris
John Von Tress

PREPARED FOR

LONE STAR INDUSTRIES

JANUARY 1984

PREPARED BY

B.W. DOYLE & R.L. BAKER

175 Clearbrook Road, Elmsford, New York 10523
(914) 347-3050

KVB
A Research-Cottrell Company

TABLE OF CONTENTS | PAGE NUMBER

1.0 Introduction 1

2.0 Summary of Results 2

3.0 Test Procedures and Instrumentation 6

4.0 Discussion of Results 13

4.1 Kiln Operation 13

4.2 Conditioning Tower-ESP Results 15

4.3 Baghouse Results 18

5.0 Recommendations and Conclusions 20

APPENDICES

Appendix A - Gaseous Data A1 - A29

Appendix B - Velocity Traverse Data B1 - B5

Appendix C - Kiln Operation Trend Plots C1 - C18

Appendix D - Dust Analysis - Lone Star D1 - D5

Appendix E - Prior KVB Gaseous Test Data - 11/81 E1 - E3

1.0 Introduction

Lone Star Industries was interested in obtaining reliable sulfur dioxide emission rate data within and from a precalciner kiln under normal operating conditions to determine an overall sulfur mass balance on the flue gas conditioning equipment typically used for particulate emissions control. The assessment was conducted at Lone Star's Cape Girardeau plant located in Southeast Missouri.

The precalciner kiln at Cape Girardeau is equipped with a bypass system which is periodically operated to control the alkalii concentration in the kiln. Gases drawn from the feedend of the kiln are quenched with ambient air prior to conditioning by a baghouse dust collector. The major portion of the combustion gases exiting the kiln proceed through the precalciner tower and are then quenched by water spray before entering an electrostatic precipitator (ESP) from which they are vented to the atmosphere.

Measurements of the sulfur dioxide at the inlet and outlet of the two flue gas conditioning systems were made as well as analysis of the feed material, clinker and recovered dust samples. This report covers the presentation and discussion of the sulfur dioxide test results obtained by KVB during a one week program conducted in October 1983.

2.0 Summary of Results

KVB, Inc. has conducted an assessment for Lone Star Industries at the Cape Girardeau plant to determine the gaseous sulfur levels at various points in the kiln exit gas flow path during a one week program conducted between October 11 through October 14, 1983 by KVB's Eastern Engineering staff. This effort was part of an overall investigation to determine the differential in sulfur dioxide (SO_2) concentrations across the conditioning tower-Electrostatic precipitator (ESP) network and the kiln bypass system. The results from the KVB testing were required to calculate an overall sulfur mass balance on the two exiting gas paths. A process schematic of the Cape Girardeau facility appears in Figure 1. The location of the gaseous monitoring and velocity traverse testing points are indicated.

The program was designed to obtain SO_2 emission rates before and during operation of the kiln bypass system. The first test efforts were dedicated to obtaining data on the conditioning tower-ESP network while the bypass system was inoperative. This was followed by a two day investigation of the SO_2 concentration differential across the bypass baghouse. Finally, an effort to profile the SO_2 distribution at the kiln exit was made which was beyond the scope of the initial program format to investigate how representative the composition of the gases entering the baghouse was relative to the gases entering the tower. Table 2 summerizes the schedule and the activities conducted under each condition.

With the bypass system off, the SO_2 concentration differential across the conditioning tower was measured and the mass flow rate was calculated using estimates for moisture and molecular weight. Stratification and test port acessability at the conditioning tower inlet may have jeopardize how representative the single point measurement was and therefore certain qualifications of the data are necessary and are discussed in Section 4. The average measured SO_2 flowrate into the spray tower was estimated to be 265 pounds per hour (lb/hr) with an average concentration of 3%. The corresponding ESP outlet SO_2 mass flowrates measured at the

stack averages 178 lb/hr with an average concentration of 135 ppm at 3% O_2. These results indicate a decrease in SO_2 concentration of approximately 32%.

Once the conditioning tower-ESP network testing was completed, the bypass system was operated and SO_2 measurements across the baghouse were taken. The quench air dillution of approximately 8:1 reduced the SO_2 concentration in the bypass system was undetectable. Measured results, based on the velocity traverses and gaseous monitoring indicated an average range at the baghouse inlet and outlet of 35-100 ppm. A differential in the SO_2 concentration across the baghouse was undeterminable. Table 2 summerizes the measurements obtained and the conditions prevailing for the four locations tested in the ESP and baghouse flow paths. A description of the test procedures is contained in Section 3 followed by a discussion of the results, Section 4.

The final day of testing was dedicated to attempting to measure the kiln feedend gaseous composition. Again SO_2, nitric oxide (NO), carbon monoxide (CO) (in ppm) and oxygen (O_2) analysis were conducted using the KVB mobile lab sampling network. Although extended monitoring could not be maintained, some insight into the effectiveness of the recently installed shelf (or kicker plate) and the extent of the reducing atmosphere caused by a coal mill fineness problem were observed.

This report includes the presentation, discussion, and documentation of the test efforts conducted by KVB. A Lone Star analysis of feed meterial, clinker, and dust samples taken during the testing activities. Summary tables of test data obtained during prior KVB testing at Cape Girardeau have also been included as an Appendix to the report for reference.

FIGURE 1

CAPE GIRARDEAU
SAMPLE SITE LOCATIONS

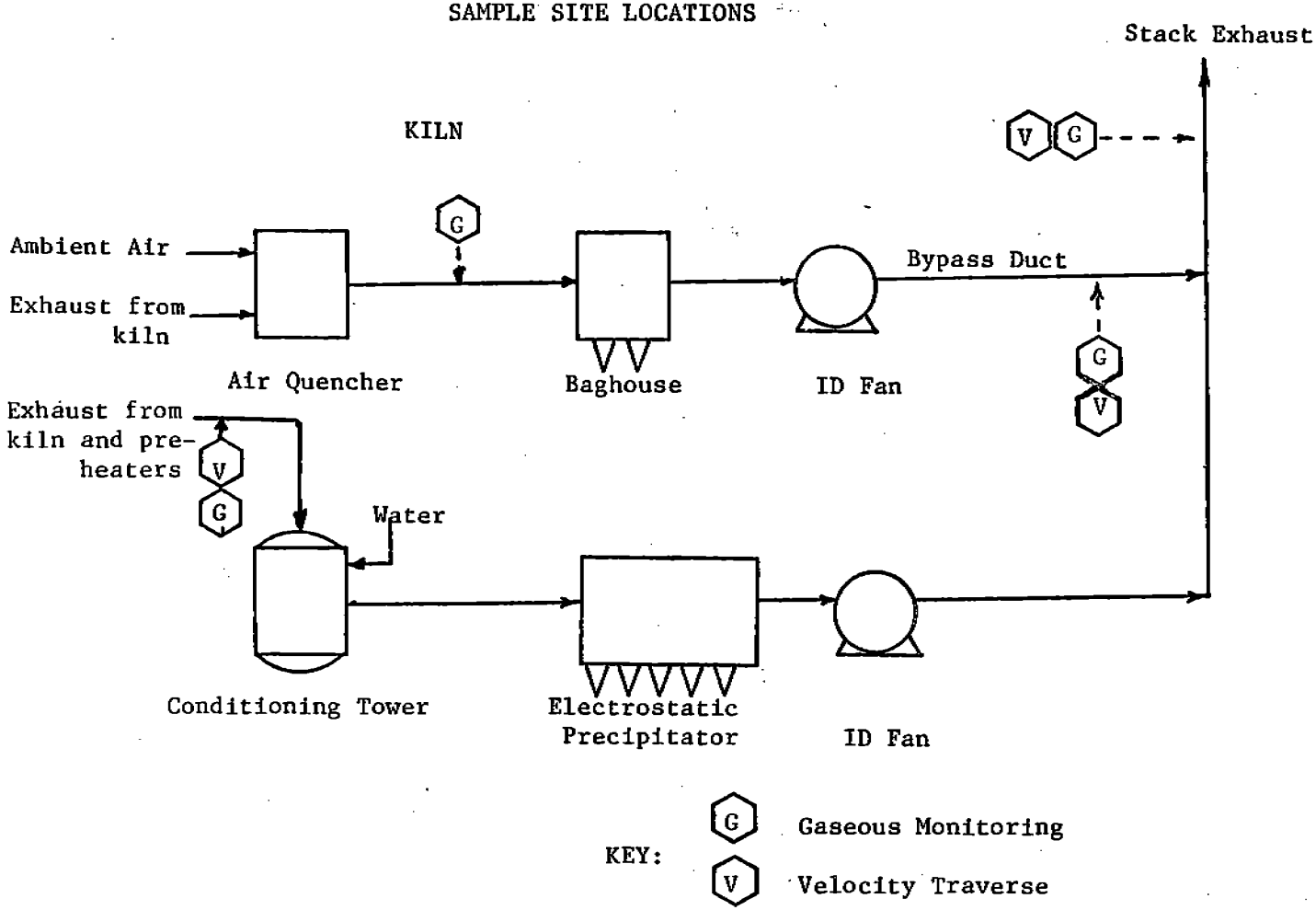

TABLE 1 LONE STAR INDUSTRIES - CAPE GIRARDEAU

TEST SCHEDULE

OCTOBER 1983

DATE	SYSTEM SAMPLED	BYPASS LOOP	KILN PROD RATE (TPH)	TESTING ACTIVITY
10/11	Set-up and Preliminary Testing	Off	224	Gaseous Monitoring
10/12	Conditioning Tower and ESP	Off	219 (1)	Gaseous Monitoring Velocity Traversing
10/13	Bypass Baghouse	On (50%) (3)	220 (2)	Gaseous Monitoring Velocity Traversing
10/14	Kiln Exit	On	224	Gaseous Monitoring

NOTES

(1) Coal feed upset at 17:15 in precalciner

(2) Kiln upset - load reduced until 10:00 AM

(3) Bypass shut down for ∿10 minutes at 16:40

TABLE 2 LONE STAR INDUSTRIES - CAPE GIRARDEAU OCTOBER 1983
SULFUR DIOXIDE MATERIAL BALANCE
KILN ESP AND BYPASS STREAMS

LOCATION	ESP INLET (COND TOW)	ESP OUTLET (STACK)	BYPASS IN (AFTER QUENCH FAN)	BYPASS OUT (AFTER ID FAN)
DATE	10/12	10/12		10/13
TEST PARAMETERS				
DUCT DIA. (FT)	9.0	10.0		4.5
AREA (FT↑2)	63.62	78.54		15.90
# TRAVERSE PTS	24.	12.		24.
# TRAVERSES AVGD.	2.	1.		1.
TEST CONDITIONS				
PITOT FACTOR	0.84	0.84		0.84
STATIC PRES(IN H2O)		-0.42		-0.52
ABS. PRES (IN HG) *	29.62	29.53		29.76
% MOISTURE **	5.0	17.0		2.0
GAS MOL. WT. ***	29.7	29.9		29.1
AVG TEMP (F)	678.	252.	458.	282.
AVG A PRES(IN H2O)	1.90	0.65		0.19
AVG %O2 MEAS	3.9	5.7	19.4	19.55
TEST RESULTS				
AVG VELOCITY (FPS)	112.6	52.0		29.0
AVG ACFM	429800.	245000.		27700.
AVG DSCFM #	189000.	155300.		19300.
GAS ANALYSIS DATA ##				
SO2 PPM @3%O2 AVG	202.	135.	30-100	35-97
SO2 LB/HR AVG	265.	178.	0.9	0.9
SO2 GM/SEC AVG	33.4	22.4	0.12	0.12
AVG DECREASE ACROSS SYSTEM (%) ###	32.		NA	

* COMPENSATED FOR ELEVATION. BAR. PRES 29.92 IN HG
** ESTIMATED FROM PROIR TEST DATA 10/81
*** CALCULATED FROM MOISTURE AND CO2 ESTIMATES WITH MEASURED O2

STANDARD CONDITIONS 29.92 IN HG AND 68 F.
BASED ON OUTLET VELOCITY TRAVERSES CORR. BY O2 MEASUREMENT
(SO2 PPM VALUES AVERAGED OVER ENTIRE TEST PERIOD - TABLE 2)
CALCULATED FROM ((IN-OUT)/IN) X 100

3.0 Sampling Procedures and Instrumentation

The main focus of the program was to obtain sufficient data within the kiln-baghouse-ESP system for the formulation of a sulfur balance. The sulfur dioxide (SO_2) concentration delta across the kiln bypass dust collector (baghouse) and the delta across the conditioning tower-ESP system was an integral part of this investigation.

In order to obtain the required data, KVB supplied and operated a mobile instrumentation van to continuously analyze samples drawn from various points in the kiln exit gas flow path. Volumetric flowrates were also required to convert the measured flue gas constituent concentrations in volumetric parts per million into mass flowrates in pounds per hour. An S-type pitot tube was used to measure the gas velocity in accordance with EPA Method 1. The gaseous monitoring and velocity traverse locations which were utilized have been identified in Figure 1.

Details of the traverse points at which pressures and temperatures were measured to determine the volumetric flowrates at the kiln stack (ESP out), bypass outlet and conditioning tower inlet (ESP inlet) sampling planes are shown in Figures 2, 3, and 4 respectively. The velocity traverse test data was recorded and has been included in Appendix B.

The mobile gaseous analysis van was located adjacent to the kiln exhaust ESP which contained a sampling conditioning system together with the oxygen (O_2), carbon monoxide (CO), nitrogen oxide (NO), and sulfur dioxide (SO_2) instrumentation. A schematic of the labs instrumentation system is illustrated in Figure 5. The emissions monitoring system operated by KVB provided a record of the flue gas constituents at the sampling points nearly simultaneously.

The data management system in the mobile emissions lab consisted of an Apple computer, printer, associated KVB, Inc. software programs, and a CRT screen. Combustion gases concentrations were automatically recorrecorded at a time interval selected by the KVB operator, nominally a three minute interval. At the conclusion of the monitoring interval,

FIGURE 2

KILN STACK SAMPLING LOCATION

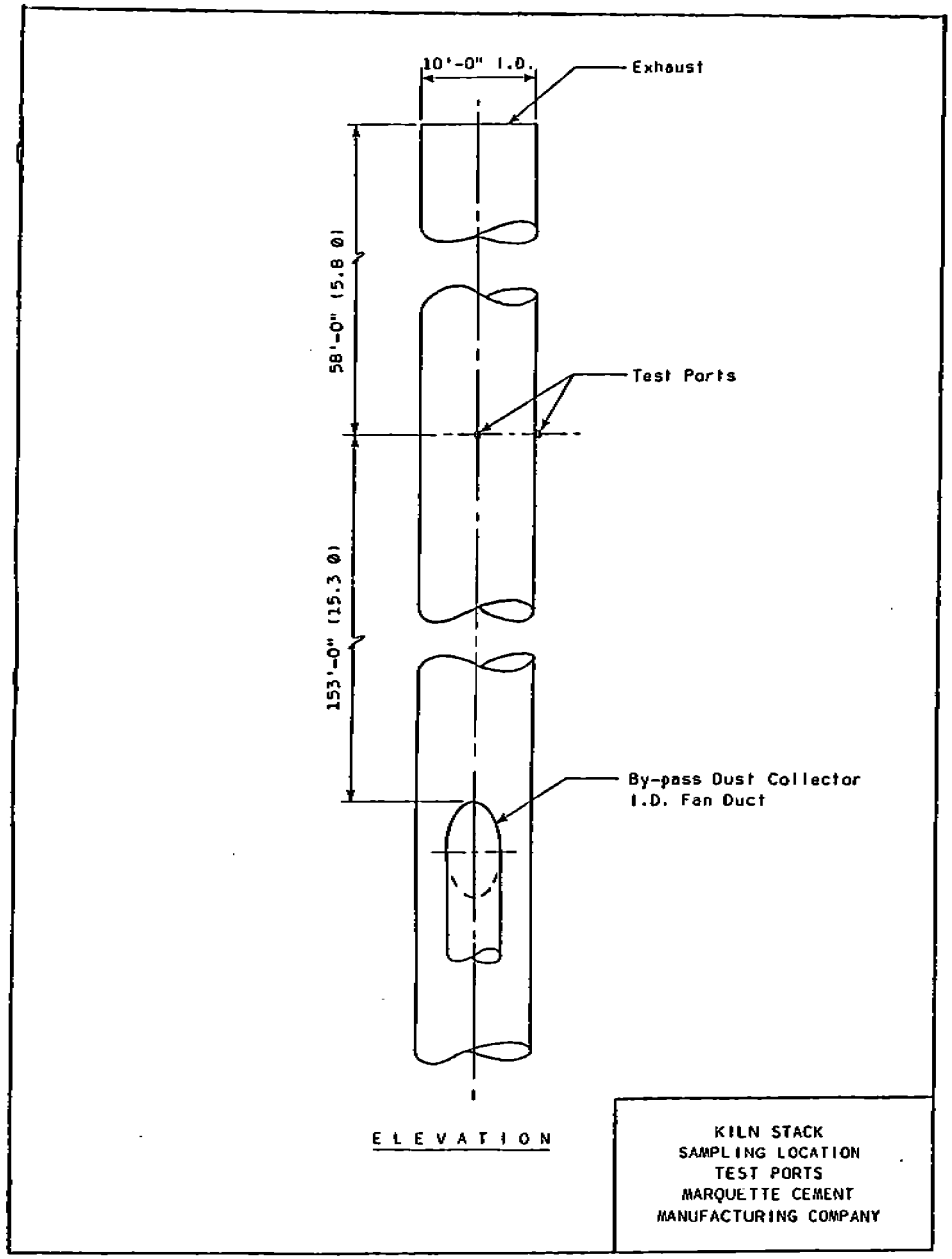

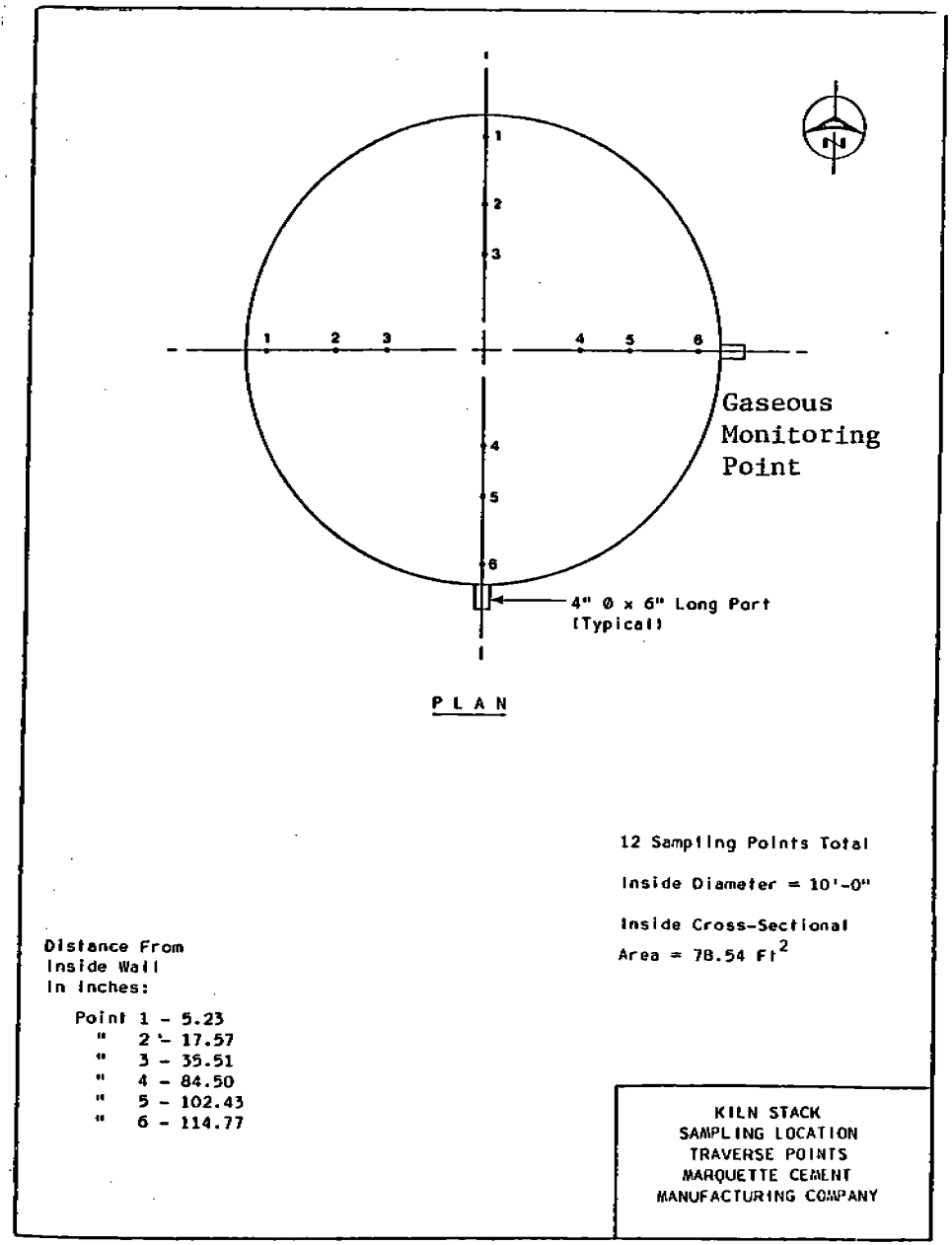

FIGURE 3 TRAVERSE POINTS - BYPASS OUTLET (BAGHOUSE OUTLET)

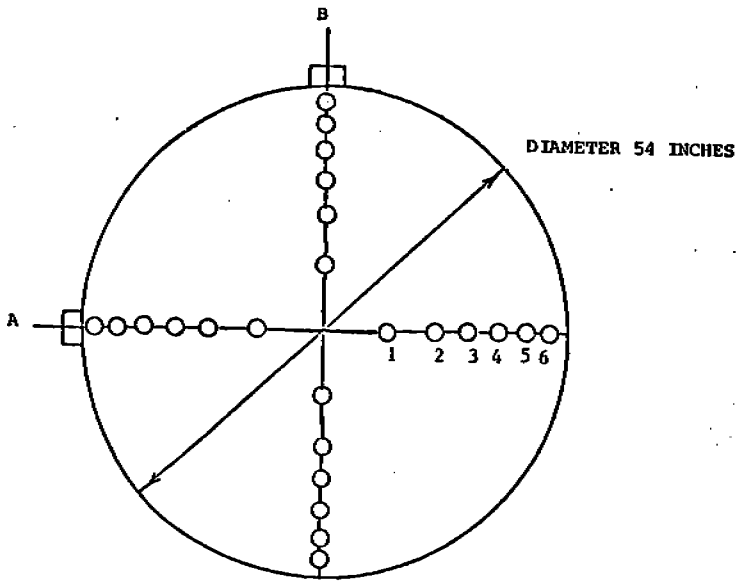

24 TOTAL SAMPLING POINTS

Traverse Points	Distance From Inside Wall (inches)
1	19.2
2	13.5
3	9.6
4	6.4
5	3.6
6	1.1

FIGURE 4 TRAVERSE POINTS - CONDITIONING TOWER INLET (ESP INLET)

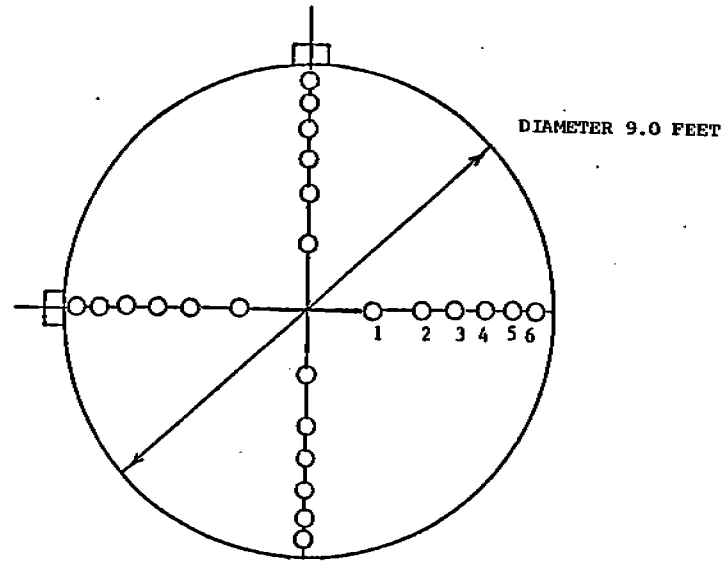

24 TOTAL SAMPLING POINTS

Traverse Points	Distance From Inside Wall (inches)
1	38.4
2	27.0
3	19.1
4	12.7
5	7.2
6	NA

FIGURE 5

KVB MOBILE GASEOUS ANALYSIS LABORATORY SCHEMATIC

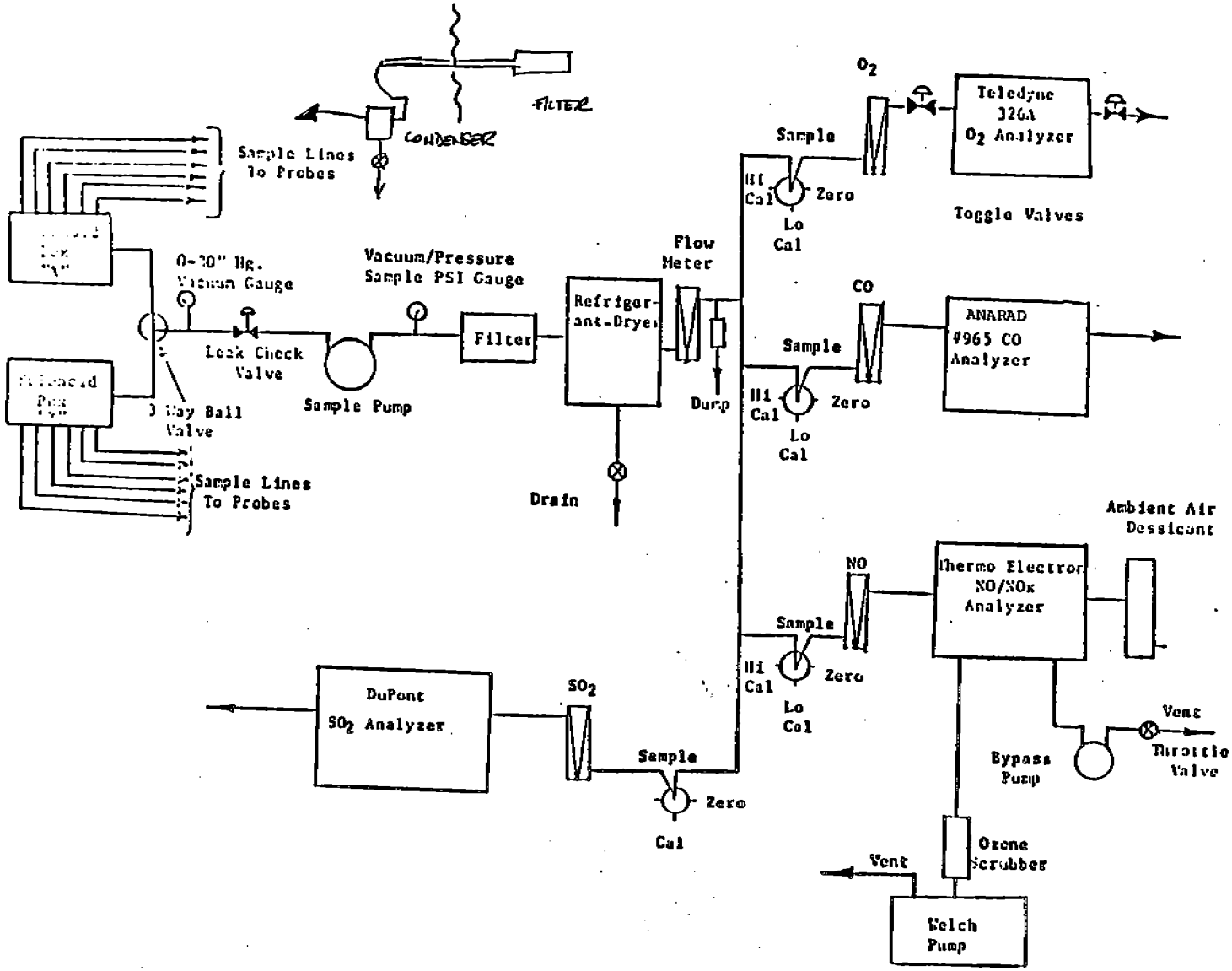

instantaneous and time averaged pollutant concentrations were provided on a printout. In addition to recording actual levels of O_2, CO, NO, and SO_2, the pollutant concentrations of NO and SO_2 were automatically corrected to 3% O_2 for reference purposes. The screens numberically displayed gaseous pollutant concentrations, both instantaneously and in one minute time averages, with an update every three seconds. In addition to these numberic averages, the screen had a simultaneous display which permitted any two of the gaseous pollutant concentration trends to be visually presented on a plot. Updated every three seconds, the plot provided a continuous trend of the selected pollutant concentrations, over a period of several minutes. The plot was periodically shifted to provide a display of pollutant trends for the proceding several minutes. These features allowed the test engineer to correlate the effects of process changes on gaseous pollutant levels.

The sampling system utilized for gaseous testing is shown in Figure Flue gas is drawn from the kiln exit through a stainless steel probe. A sintered metal filter is attached to the front end of the probe to remove the particulate matter from the gas stream. The filtered gases were then colled and dried in a moisture condenser maintained in an ice bath located adjacent to the sampling probe. This sample was then drawn through plastic tubing into the mobile lab where it was again run through a second moisture condenser to insure that a dry sample was delivered to the analytical system.

The analytical system consists of the instruments and associated equipment for simultaneously measuring the composition of the kiln exhause gas. The analyzers, recorders, controls, and computer monitor are contained within the KVB, Inc. mobile laboratory.

Listed below are the measured gaseous consistuents, the analyzer model numbers, and the range and accuracy of each analyzer in the system. A discussion of each analyzer follows.

- Nitric Oxide
  Thermo Electron Chemiluminescent Analyzer
  Range: 0-2.5, 10, 25, 100, 250, 1000, 2500, 10,000 ppm NO
  Accuracy: ±1 of full scale

- Oxygen
  Teledyne Model 326A Analyzer
  Range: 0-5, 10, and 25% O_2 full scale
  Accuracy: ±1% of full scale

- Carbon Monoxide
  ANARAD Model AB Non-dispersive Infrared Analyzer
  Range: 0-500 and 0-1000 ppm
  Accuracy: ±1 of full scale

- Sulfur Dioxide
  DuPont Model 400
  Range 0-1000 ppm
  Accuracy: ±1 of full scale

Each instrument relies upon a different mechanism to determine a concentration. A brief description of the operation of the instrument and corresponding specifications are follows:

A Thermo Electron chemiluminescent nitric analyzer was used to measure NOx. The operational basis of the instrument is the chemiluminescent reaction of NO and O_3 to form NO_2. Light emissions results when electronically excited NO_2 molecules revert to their ground state. This resulting chemiluminescence os monitored output, which is linearly proporational to the NO concentration.

Specifications: Accuracy: 1% of full scale
Span Stability: ±1% of full scale in 24 hours
Zero Stability: ±1% ppm in 24 hours
Power Requirements: 115±10v, 60Hz, 1000 watts
Response: 0.7 sec. (NO mode)
Output: 4-20 ma
Sensitivity: 0.5 ppm
Linearity: ±1% of full scale
Vacuum detector operation
Range: 2.5, 10, 25, 100, 250, 1000, 2500, 10,000 ppm full scale

A Teledyne Model 326A oxygen analyzer was used to determine the oxygen content of the flue gas sample. Oxygen in the sample gas diffuses through a Teflon membrane and is reduced on the surface of the cathode. A corresponding oxidation occurs at the anode (internally) and a electrically modified to give a final output in percent O_2 by volume for operating ranges of 0% to 5%, to 10%, or to 25%.

Specifications: Precision: ±1% of full scale
Response: 90% in less than 40 seconds
Sensitivity: 1% of low range
Linearity: 1±% of full scale
Ambient Temperature Range: 32-125°F
Power Requirement: 115 VAC, 50-60 Hz, 100 watts
Output: 4-20 ma

Carbon monoxide concentration was measured with a Series Five Model AB non-dispersive infrared analyzer made by Sensor, Inc. This instrument measures the differential in infrared energy absorbed from energy beams passed through a reference cell (containing a gas selected to have minimal absorption of infrared energy in the wavelength absorbed by carbon monoxide) and a sample cell through which the sample gas flows continuously.

Specifications:
- Linearity: 2.6% full scale
- Span Stability: ±1% of full scale in 24 hours
- Zero Stability: ±1% of full scale in 24 hours
- Line Voltage: 115±14v rms
- Response: 90% of full scale in 0.5 or 2.5 seconds
- Precision: ±1% of full scale
- Output: 0-1 volt
- Range: 0-500 and 0-1000 ppm

Flue gas sulfur dioxide (SO_2) concentration was measured with a DuPont Model 400 Split Beam Photometric analyzer. This instrument utilizes the selective absorption of a specific wavelength of light energy emitted by SO_2 molecules to determine the concentration of this specie in the gas stream expressed in parts per million (ppm). Measurement and reference wavelengths are chosen so that the effects of variations in the concentration of any contaminants are minimized.

Specifications:
- Precision: ±1% full scale
- Accuracy: ±1% full scale
- Output: 4-20 mADC
- Measuring Wavelength: 280 nm
- Reference Wavelength: 365 nm
- Calibration Filter Absorbence: 0.270
- Calibration Filter Equivalence: 597 ppm SO_2 (59.7% F.S.)

The flue gas analysis data taken during the two week program was printed and stored by the computer system. Printouts appear in Appendix A.

4.0 Discussion of Results

The main focus of this test program was to quantify the gaseous phase sulfur, sulfur dioxide (SO_2), at various points in the process flue gas stream while the kiln was operated with and without the bypass system in service. Tests were conducted over a four day period, two days before the bypass stream was activiated and the first two days after the bypass was in operation. The inlet and outlet SO_2 concentrations of the ESP (including the conditioning tower) and the baghouse were measured. The locations at which the gaseous monitoring and velocity traverses were conducted are indicated on Figure 1. Since the scope of the program was constrained to data acquisition at nominal operating conditions, communications with the kiln operators was maintained through the Lone Star program coordinators on-site, Mr. Walter Greer and Mr. Roy Click and with the KVB test engineer.

The discussion of the test conditions and results obtained during the program is presented in the following sections: kiln operation, the conditioning tower - ESP measurements and the baghouse measurements. Conclusions and recommendations are presented in Section 5.

4.1 Kiln Operation

The concentration of sulfur in the gaseous phase exiting the kiln-precalciner system is strongly dependent upon the combustion performance, excess oxygen levels and the material chemistry. Although a measured SO_2 differential across the ESP and baghouse systems is not necessarily dependent upon the magnitude, it is critical that the inlet concentration is relatively constant in order for the inlet-outlet differential concentration to be of value.

The gaseous analysis measurements were obtained through several hundred feet of sample line between the instrumentation van and the sampling points and required several minutes to switch to a point, obtain a representative sample at the inlet, switch a solenoid valve to the outlet point and obtain a representative sample. This sequence typically required 5-15 minutes to complete. It is not uncommon for SO_2 levels to vary by an order of magnitude (200 to 2000 ppm) in a period of 10 minutes if there is any

significant adjustments made in the fuel, feed, or excess air rates, therefore an attempt was made to document the kiln operational parameters during inlet-outlet test periods since simultaneous sampling could not be executed.

As noted in Table 1, there were occasional operational upsets encountered during the program which delayed obtaining the desired data but did provide an opportunity to monitor the ESP and baghouse systems during transient conditions. Data from these periods are also included in Appendix A along with the other gaseous data but are not discussed in this report. Trend plots generated by the Cape Girardeau data logger were provided after each test day and have been included in Appendix C. Upset conditions were also easily recognized by the deviations from baseline levels of the nitric oxide (NO) and carbon monoxide (CO) as well as oxygen which were all measured in parallel with the SO_2.

It should also be noted that during the test program two factors in the operation of the kiln-precalciner system may have tainted the data presented in Table 1, namely the recent installation of a shelf (kicker plate) located below the kiln feed downcomer from the precalciner tower and the coal mill fineness at the precalciner. The first factor, the precalciner shelf, by increasing the turbulence in the opposite end of the mix chanber from the bypass duct orifice, a shift in the sulfur/alkalii equilibrium may have resulted and the composition of the dust and gases entering the bypass baghouse may now be significantly different. This may only be important if this data set is to be viewed in conjunction with previous data from the Cape Girardeau kiln. The second factor, the precalciner coal mill fineness, may have also effected the form of the sulfur entering the ESP and baghouse systems and may, therefore, have effected the concentration differential across those systems. Although only limited data were obtained during the attempt to monitor at the kiln exit, the data appeared to verify the expected combustion defficiency in the form of unusually high CO concentrations. The impact of the reducing atmosphere on the SO_2 levels was outside the scope of this program. However, dust samples collected from the ESP and baghouse during the testing have been analyzed and a copy of the Lone Star reports are included as Appendix D as a reference.

4.2 Conditioning Tower and ESP Results

As part of the SO_2 measurement test plan, the SO_2 removal efficiency of the conditioning tower-ESP network was determined from the differential in measured concentrations across the network. Inlet concentrations were measured at the conditioning tower inlet, immediately above the water spray manifold while the outlet concentration was measured at the kiln exhaust stack downstream of the ESP. These locations are detailed in Section 3.0 and are illustrated in Figure 6.

The limited availability of sample ports for gaseous monitoring and velocity traversing dictated that the inlet sampling be conducted in the plane approximately 6 feet above the water spray nozzles prior to diverging to the full diameter of the conditioning tower. As a result of the less than ideal test port configuration, the velocity profile and representative SO_2 concentrations were difficult to obtain. The velocity traverse test taken at the conditioning tower inlet verified the turbulent flow. The gaseous testing also indicated significant variations in the SO_2 concentration across the diameter. Values measured ranged from 71-189 ppm (corrected to 3% oxygen) with an average value of 173 ppm. Throughout the test series, the single point which was periodically monitored and logged on the data printouts was situated in a relatively higher concentration strata, and therefore the ESP inlet results may not be representative of a volume weighted average concentration. Based on a daily average of the data from the single point monitoring (202 ppm corrected to 3% O_2) and a volumetric flowrate determined from the average of two 24 point velocity traverses a mass flow-rate of SO_2 was estimated. Since moisture and molecular weight measurements were not conducted, estimates were taken from previous test data conducted in October 1981 (moisture 5%, molecular weight 29.7). From the measured volumetric flowrate of 429,800 actual cubic feet per minute (ACFM), 189,000 SCFM dry, the average mass flowrate of SO_2 entering the conditioning tower-ESP network was estimated to be 265 pounds per hour (lb/hr).

The measurements to determine the ESP outlet concentration of SO_2 were made at the kiln exhaust stack. As indicated in the schematic, Figure and illustrated in Figure 6, the location is situated away from any flow

FIGURE VELOCITY TRAVERSE SAMPLING LOCATIONS

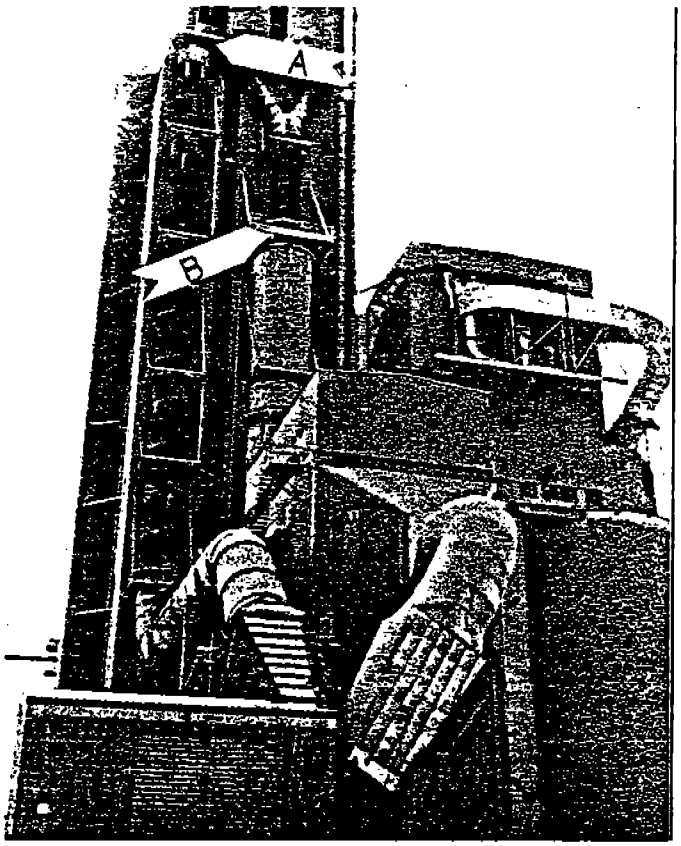

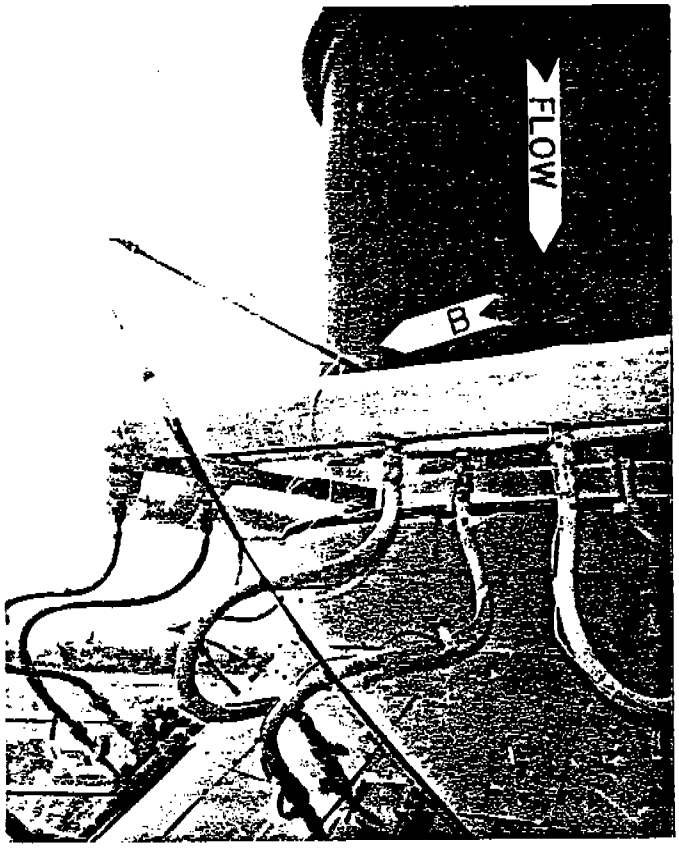

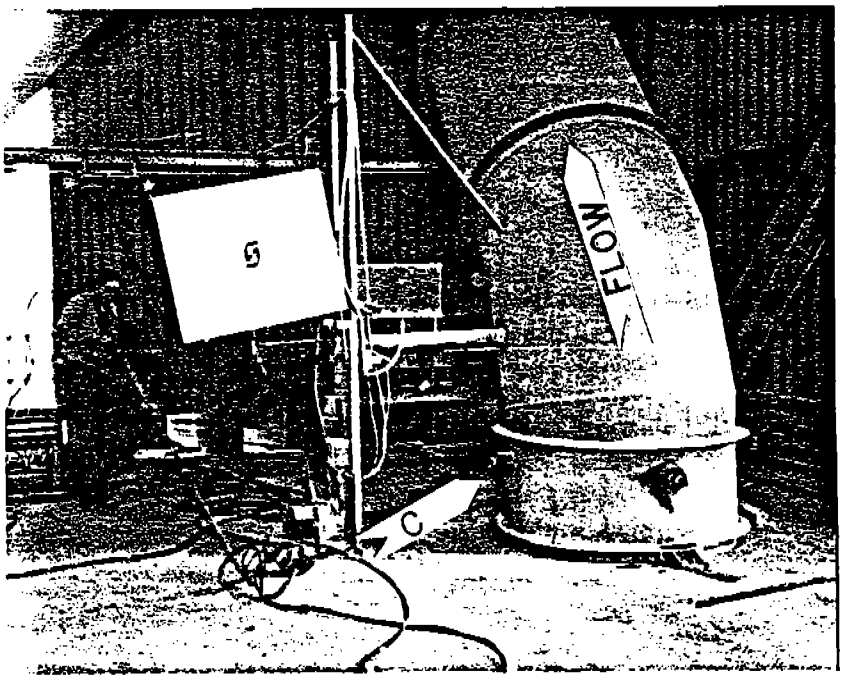

LOCATIONS A. Kiln Stack - Total Discharge of Preheater and Bypass Flue Gas.

B. Conditioning Tower Inlet - Preheater Discharge Prior to ESP.

NOTE: Sample Ports Immediately Upstream of Conditioning Tower Water Spray Mainifold.

C. Bypass Outlet - Downstream of Baghouse ID Fan.

disturbances. The velocity and gaseous traverses indicated an even distribution of flow and SO_2 concentration. The single point which was periodically monitored to generate a daily average value is representative of a volume weighted average. With the bypass system inoperative, the measured concentration of SO_2 at the stack was 135 ppm with a corresponding volumetric flowrate of 245,000 actual cubic feet per minute (ACFM). Assuming a moisture content of 17% and an average molecular weight of 29.7 (taken from previous test data conducted in October 1981), the corrected volumetric flowrate was estimated to be 155,300 DSCFM. Based on the average SO_2 concentration of 135 ppm (corrected to 3% O_2, stack O_2 averaged 5.7%) the mass flowrate of SO_2 is estimated to be 178 lb/hr (22.4 gm/sec).

These results indicate a SO_2 concentration differential across the conditioning tower-ESP network of approximately 32%. This estimate may be inadvertantly larger than actual due to the associated SO_2 measurement difficulties at the conditioning tower inlet.

4.3 Baghouse Results

Upon completion of the conditioning tower-ESP network testing with the bypass system inoperative, the kiln operation was modified and the bypass damper was gradually opened, in small increments as the stability of the kiln allowed over the course of approximately 12 hours unitl a target setting of 50% was reached. During the two test days which followed, velocity and gaseous tests were conducted to obtain inlet and outlet SO_2 concentrations and mass flowrates similar to what was accomplished for the conditioning tower-ESP network.

As shown in Figure 1, the bypass system is composed of a quench fan and baghouse dust collector which is used to condition and treat a relatively small slip stream of kiln exhause gases which are extracted from the kiln feedend prior to entering the precalciner tower. The system is periodically used for removal of high alkalii material which accumulates in that region of the pyroprocessing. Obtaining a SO_2 concentration differential across the baghouse dust collector was a major objective of this program.

The acquisition of representative SO_2 concentrations at the inlet and outlet ducting of the baghouse also had inherant measurement difficulties associated with it. Since the concentration of the gases entering the baghouse is dilluted with ambient air to lower the temperature to a value which the dust collection bags can tolerate, the measurement accuracy and sensitivity requirements in the 100 ppm range is critical for the SO_2 instrumentation. The sensitivity to the kiln pyroprocessing and chemistry is greater since the bypass gases are not "buffered" by the precalciner residence time. The associated oxygen measurements used for dillution corrections also introduce the potential for larger measurement errors.

Typical values for SO_2 concentrations ranged from 0-150 ppm (corrected to 3% O_2) entering the baghouse. However, the oxygen level ranged from 18.3 - 19.6% meaning that the concentration of the gases in the actual bypass stream was less than 20 ppm. The measurement of a differential at these concentrations is not within the capability of the sampling procedure and instrumentation which was on site. Simulataneous wet chemistry batch sampling techniques would have helped but would not have resolved the problem of correlating for the very high dilution rate.

Table 2 contains a summary of the results for the bypass and ESP testing efforts. As noted, the estimated mass flowrate of SO_2 into the baghouse is only 0.9 ob/hr while the bypass was operating at approximatley 50%. A traverse conducted at the baghouse outlet ducting (see Figure) indicated a volumetric flowrate of 27,700 ACFM with an oxygen content of 19.55% and an average SO_2 concentration of 65 ppm (corrected to 3% O_2). No detectable SO_2 differential was observed. The corresponding dust analysis conducted by Lone Star is included in Appendix D.

5.0 Conclusions and Recommendations

Based upon the test data acquired and observations made, the following conclusions have been drawn.

- There is a decrease in the sulfur dioxide (SO_2 mass flow rate across the conditioning tower-ESP network. Measured values indicated a 32% decrease. No measurements were made between the conditioning tower and the ESP. Average stack emission rates were calculated as 178 lb/hr (22.4 gm/sec).

- The amount of SO_2 entering the bypass baghouse is negligable. Values ranged from 1-3 lb/hr. (.1-.3 gm/sec). A concentration differential could not be detected on a regular basis.

- Operation of the bypass may be effected by the installation of the shelf at the kiln feedend.

The program conducted at Cape Girardeau was useful in identifying relative mass flow rates of SO_2. The following recommendations are offered for consideration.

- A further investigation is required to obtain volume weighted mass flow rates at the conditioning tower inlet. Sampling ports should be located further upstream of the water spray manifold. Measurements should also be made between the conditioning tower and the ESP to determine the effect of each of the items on SO_2 levels.

- The effect of the bypass baghouse on SO_2 levels can be evaluated by increasing the bypass gas SO_2 content by either operational modifications or controlled artificial spiking. Alternatively simultaneous wet chemistry batch tests can be conducted.

- Expanded monitoring capabilities for NOx and SO_2 at the kiln exit would prove to be a valuable tool at Cape Girardeau.

APPENDIX A

GASEOUS DATA

KVB ONLINE KILN MONITOR

175 CLEARBROOK RD. ELMSFORD, N.Y. 10523 (914) 347 3050

TEST SITE LONE STAR - CAPE GIR.
KILN NUMBER 2
TEST DESCRIPTION BASELINE
PRODUCTION RATE NOMINAL
TEST NUMBER LS-CG-1011-1
TEST DATE 5-11-1983

ID	TIME	PROBE	MODE	O2 (%)	CO (PPM)	NO(PPM@3%O2)	SO2(PPM@3%O2)
1	0142	SPRAY	MANUAL	4.9	749	364	187
2	0142	SPRAY	AUTO	4.9	737	363	189
	0144	NOTE - LEAK CK = 0.5 SCFH					
3	0145	SPRAY	AUTO	5	729	373	205
4	0148	SPRAY	AUTO	4.9	723	380	207
5	0151	SPRAY	AUTO	4.9	750	368	212
6	0154	BYPASS	AUTO	7.9	533	388	93
7	0157	BYPASS	AUTO	7.8	563	390	95
8	0202	ESP OUT	AUTO	12.8	315	386	43

A1

KVB ONLINE KILN MONITOR

175 CLEARBROOK RD. ELMSFORD, N.Y. 10523 (914) 347 3050

TEST SITE LONE STAR - CAPE GIR.
KILN NUMBER 2
TEST DESCRIPTION BASELINE
PRODUCTION RATE NOMINAL
TEST NUMBER LS-CG-1011-1
TEST DATE 5-11-1983 10/11

ID	TIME	PROBE	MODE	O2 (%)	CO (PPM)	NO(PPM@3%O2)	SO2(PPM@3%O2)
1	0020	TEST	MANUAL	11.8	5	41	0
2	0021	TEST	AUTO	18.7	8	63	0
3	0031	TEST	AUTO	19.7	9	61	0
4	0041	TEST	AUTO	19.6	8	50	0
5	0051	TEST	AUTO	19.4	8	59	0
6	0101	TEST	AUTO	19.3	8	49	0
7	0111	TEST	AUTO	19.3	9	258	0
8	0121	TEST	AUTO	3.1	699	522	84
9	0131	TEST	AUTO	20.2	0	574	28405

~16:00

NOTE: LEAK IN SAMPLING SYSTEM

KVB ONLINE KILN MONITOR

175 CLEARBROOK RD. ELMSFORD, N.Y. 10523 (914) 347 3050

TEST SITE: LONE STAR - CAPE GIR.
KILN NUMBER: 2
TEST DESCRIPTION: BASELINE
PRODUCTION RATE: NOMINAL
TEST NUMBER: LS-CG-1012-1
TEST DATE: 5-11-1983

ID	TIME	PROBE	MODE	O2 (%)	CO (PPM)	NO(PPM@3%O2)	SO2(PPM@3%O2)
1	1751	ESP IN	AUTO	4.4	846	463	206
6.30							
2	1752	ESP IN	AUTO	4.3	843	463	205
3	1753	ESP IN	AUTO	4.3	855	460	210
4	1754	ESP IN	AUTO	4.2	886	445	191
5	1755	ESP IN	AUTO	4.2	864	452	181
6	1756	ESP IN	AUTO	4.3	855	463	177
A3	1757	ESP IN	AUTO	4.2	907	459	182
8	1759	ESP OUT	AUTO	4.2	870	301	125
9	1800	ESP OUT	AUTO	10.9	374	343	21
	1800	NOTE - PROBE SWITCH 2 MIN DELAY					
10	1801	ESP OUT	AUTO	13.5	287	469	65
1	1802	ESP OUT	AUTO	13	345	433	90

10/12

KVB ONLINE KILN MONITOR

175 CLEARBROOK RD. ELMSFORD, N.Y. 10523 (914) 347 3050

TEST SITE: LONE STAR - CAPE GIR.
KILN NUMBER: 2
TEST DESCRIPTION: BASELINE
PRODUCTION RATE: NOMINAL
TEST NUMBER: LS-CG-1012-1
TEST DATE: 5-11-1983

ID	TIME	PROBE	MODE	O2 (%)	CO (PPM)	NO(PPM@3%O2)	SO2(PPM@3%O2)
	1734	NOTE - TIME 0811					
1	1735	ESP OUT	AUTO	12.9	318	421	84
2	1738	ESP OUT	AUTO	12.2	376	435	97
3	1741	ESP OUT	AUTO	12.5	362	448	105
4	1744	ESP OUT	AUTO	12.5	352	443	115
5	1746	ESP IN	AUTO	12.6	349	444	111
	1746	NOTE - LAST READING FALSE					
6	1747	ESP IN	AUTO	12.6	349	536	90
7	1748	ESP IN	AUTO	11	466	784	100
	1749	NOTE - LK RATE 0.3 SCFH					
8	1749	ESP IN	AUTO	5.7	783	522	178
9	1750	ESP IN	AUTO	4.6	811	473	196

KVB ONLINE KILN MONITOR

175 CLEARBROOK RD. ELMSFORD, N.Y. 10523 (914) 347 3050

TEST SITE LONE STAR - CAPE GIR.
KILN NUMBER 2
TEST DESCRIPTION BASELINE
PRODUCTION RATE NOMINAL
TEST NUMBER LS-CG-1012-1
TEST DATE 5-11-1983

ID	TIME	PROBE	MODE	O2 (%)	CO (PPM)	NO(PPM@3%O2)	SO2(PPM@3%O2)
1	1848	BYPAS OUT	AUTO	7.4	732	421	95
2	1851	BYPAS OUT	AUTO	7.5	717	435	88
9:30							
3	1854	BYPAS OUT	AUTO	7.4	773	419	58
4	1857	BYPAS OUT	AUTO	7.4	744	433	52
5	1900	BYPAS OUT	AUTO	7.4	726	432	54
6	1903	BYPAS OUT	AUTO	7.5	680	444	49
7	1906	BYPAS OUT	AUTO	7.4	715	430	49
8	1909	ESP OUT	AUTO	12.5	510	1007	138
9	1912	ESP OUT	AUTO	5.5	877	433	129
10	1915	ESP OUT	AUTO	5.5	869	438	127
11	1918	ESP OUT	AUTO	5.6	894	437	138
12	1921	ESP OUT	AUTO	5.5	865	446	137

KVB ONLINE KILN MONITOR

175 CLEARBROOK RD. ELMSFORD, N.Y. 10523 (914) 347 3050

TEST SITE LONE STAR - CAPE GIR.
KILN NUMBER 2
TEST DESCRIPTION BASELINE
PRODUCTION RATE NOMINAL
TEST NUMBER LS-CG-1012-1
TEST DATE 5-11-1983

ID	TIME	PROBE	MODE	O2 (%)	CO (PPM)	NO(PPM@3%O2)	SO2(PPM@3%O2)
1	1810	ESP OUT	AUTO	13.3	345	462	101
	1819	NOTE - LK CK ESP IN (COND. TOWER) OK					
	1819	NOTE - 23.2 IN. HG ZERO FLOW					
2	1825	ESP IN	AUTO	4.1	973	462	193
3	1828	ESP IN	AUTO	4.2	938	435	207
9:00							
	1832	NOTE - LK CK ESP OUT 23 IN HG 0 FLOW					
	1835	NOTE - BYPASS OUT 23 IN HG 0 FLOW					
	1836	NOTE - PRINTOUT AVGS ON 3 SEC DELAY					
4	1838	ESP IN	AUTO	5	1030	437	161
5	1841	ESP IN	AUTO	4	1044	418	200
	1843	NOTE - TIME 0920					
	1844	ESP IN	AUTO	4	990	420	208

KVB ONLINE KILN MONITOR

175 CLEARBROOK RD. ELMSFORD, N.Y. 10523 (914) 347 3050

TEST SITE: LONE STAR - CAPE GIR.
KILN NUMBER: 2
TEST DESCRIPTION: BASELINE
PRODUCTION RATE: NOMINAL
TEST NUMBER: LS-CG-1012-1
TEST DATE: 5-11-1983

ID	TIME	PROBE	MODE	O2 (%)	CO (PPM)	NO(PPM@3%O2)	SO2(PPM@3%O2)
1	1955	ESP OUT	AUTO	5.5	1027	448	150
2	1958	ESP OUT	AUTO	5.3	1000	426	153
3	2001	ESP OUT	AUTO	5.5	970	439	165
4	2004	ESP OUT	AUTO	5.5	987	428	164
5	2007	ESP OUT	AUTO	5.5	953	451	163
6	2010	ESP OUT	AUTO	5.5	909	457	162
7	2013	ESP OUT	AUTO	5.7	950	477	158
8	2016	ESP OUT	AUTO	5.5	889	471	150
9	2019	ESP OUT	AUTO	5.6	856	466	148
10	2022	ESP OUT	AUTO	5.7	878	465	154
11	2025	ESP OUT	AUTO	5.5	867	468	144
2	2028	ESP OUT	AUTO	5.6	851	469	132

KVB ONLINE KILN MONITOR

175 CLEARBROOK RD. ELMSFORD, N.Y. 10523 (914) 347 3050

TEST SITE: LONE STAR - CAPE GIR.
KILN NUMBER: 2
TEST DESCRIPTION: BASELINE
PRODUCTION RATE: NOMINAL
TEST NUMBER: LS-CG-1012-1
TEST DATE: 5-11-1983

ID	TIME	PROBE	MODE	O2 (%)	CO (PPM)	NO(PPM@3%O2)	SO2(PPM@3%O2)
	1922	NOTE - TIME 0959					
10:00 1	1925	ESP IN	AUTO	3.9	1117	435	173
2	1928	ESP IN	AUTO	3.9	1044	435	207
3	1931	ESP IN	AUTO	3.9	1158	430	220
4	1934	ESP IN	AUTO	3.8	1108	426	217
5	1937	ESP IN	AUTO	4	1068	447	217
6	1940	ESP IN	AUTO	4.1	1008	440	213
7	1943	ESP IN	AUTO	4	1001	443	245
8	1946	ESP IN	AUTO	3.8	1040	452	250
9	1949	ESP OUT	AUTO	5.5	913	450	106
	1949	NOTE - TIME 1025					
10:30	1952	ESP OUT	AUTO	5.5	995	445	137

KVB ONLINE KILN MONITOR

175 CLEARBROOK RD. ELMSFORD, N.Y. 10523 (914) 347 3050

TEST SITE: LONE STAR - CAPE GIR.
KILN NUMBER: 2
TEST DESCRIPTION: BASELINE
PRODUCTION RATE: NOMINAL
TEST NUMBER: LS-CG-1012-1
TEST DATE: 5-11-1983

ID	TIME	PROBE	MODE	O2 (%)	CO (PPM)	NO(PPM@3%O2)	SO2(PPM@3%O2)
1	2113	ESP OUT	AUTO	5.6	847	434	138
2	2116	ESP OUT	AUTO	5.6	872	444	137
3	2119	ESP OUT	AUTO	5.7	889	441	145
4	2122	ESP OUT	AUTO	5.5	956	439	145
5	2125	ESP OUT	AUTO	5.6	900	446	137
6	2128	ESP OUT	AUTO	5.7	873	450	142
7	2131	ESP OUT	AUTO	5.7	847	452	143
8	2134	ESP OUT	AUTO	5.7	904	436	149
9	2137	ESP OUT	AUTO	5.5	908	436	138
10	2140	ESP OUT	AUTO	5.7	903	429	133
11	2143	ESP OUT	AUTO	5.7	880	422	131
2	2146	ESP OUT	AUTO	5.7	935	423	140

KVB ONLINE KILN MONITOR

175 CLEARBROOK RD. ELMSFORD, N.Y. 10523 (914) 347 3050

TEST SITE: LONE STAR - CAPE GIR.
KILN NUMBER: 2
TEST DESCRIPTION: BASELINE
PRODUCTION RATE: NOMINAL
TEST NUMBER: LS-CG-1012-1
TEST DATE: 5-11-1983

ID	TIME	PROBE	MODE	O2 (%)	CO (PPM)	NO(PPM@3%O2)	SO2(PPM@3%O2)
1	2031	ESP OUT	AUTO	5.7	884	465	137
2	2034	ESP OUT	AUTO	5.6	894	449	133
3	2037	ESP OUT	AUTO	5.6	917	436	131
4	2040	ESP OUT	AUTO	5.7	977	433	134
5	2043	ESP OUT	AUTO	5.6	935	449	131
	2047	NOTE - TIME 1124					
11:30 6	2052	ESP IN	AUTO	4.1	1018	450	178
7	2055	ESP IN	AUTO	4.1	1055	440	188
8	2101	ESP OUT	AUTO	5.5	910	426	125
9	2104	ESP OUT	AUTO	5.8	887	420	130
10	2107	ESP OUT	AUTO	5.6	946	445	138
1	2110	ESP OUT	AUTO	5.6	937	437	142

KVB ONLINE KILN MONITOR

175 CLEARBROOK RD. ELMSFORD, N.Y. 10523 (914) 347 3050

TEST SITE: LONE STAR - CAPE GIR.
KILN NUMBER: 2
TEST DESCRIPTION: BASELINE
PRODUCTION RATE: NOMINAL
TEST NUMBER: LS-CG-1012-1
TEST DATE: 5-11-1983

ID	TIME	PROBE	MODE	O2 (%)	CO (PPM)	NO(PPM@3%O2)	SO2(PPM@3%O2)
1	2149	ESP OUT	AUTO	5.5	956	413	139
	2151	NOTE - ESP OUT TRAVERSE 1200-1220					
2:30							
2	2155	ESP IN	AUTO	4.2	1072	428	157
3	2158	ESP IN	AUTO	4	1040	420	213
4	2201	ESP IN	AUTO	4.1	992	434	213
5	2204	ESP IN	AUTO	4	1036	446	224
6	2207	ESP IN	AUTO	3.9	1066	438	240
7	2210	ESP IN	AUTO	3.9	1016	437	228
8	2213	ESP IN	AUTO	3.9	1064	432	224
9	2216	ESP IN	AUTO	4.1	1058	429	230
10	2219	ESP IN	AUTO	3.9	1023	459	220
00 11	2222	ESP IN	AUTO	3.9	1011	466	218

KVB ONLINE KILN MONITOR

175 CLEARBROOK RD. ELMSFORD, N.Y. 10523 (914) 347 3050

TEST SITE: LONE STAR - CAPE GIR.
KILN NUMBER: 2
TEST DESCRIPTION: BASELINE
PRODUCTION RATE: NOMINAL
TEST NUMBER: LS-CG-1012-1
TEST DATE: 5-11-1983

ID	TIME	PROBE	MODE	O2 (%)	CO (PPM)	NO(PPM@3%O2)	SO2(PPM@3%O2)
1	2225	ESP IN	AUTO	4	1072	453	225
2	2228	ESP IN	AUTO	3.9	1005	465	223
3	2231	ESP IN	AUTO	3.9	1020	446	231
4	2234	ESP IN	AUTO	3.8	1004	467	223
5	2237	ESP IN	AUTO	3.9	1035	462	231
6	2240	ESP IN	AUTO	3.9	1021	440	206
7	2243	ESP IN	AUTO	3.9	997	479	202
8	2246	ESP IN	AUTO	3.9	999	454	200
9	2249	ESP IN	AUTO	3.9	1027	443	205
3:30 10	2252	ESP IN	AUTO	3.9	1021	443	203
11	2255	ESP IN	AUTO	3.9	1061	426	202
12	2258	ESP IN	AUTO	3.9	1063	446	204

KVB ONLINE KILN MONITOR

175 CLEARBROOK RD. ELMSFORD, N.Y. 10523 (914) 347 3050

TEST SITE LONE STAR - CAPE GIR.
KILN NUMBER 2
TEST DESCRIPTION BASELINE
PRODUCTION RATE NOMINAL
TEST NUMBER LS-CG-1012-1
TEST DATE 5-11-1983

ID	TIME	PROBE	MODE	O2 (%)	CO (PPM)	NO(PPM@3%O2)	SO2(PPM@3%O2)
1	2337	ESP IN	AUTO	4	1040	457	200
2	2340	ESP IN	AUTO	3.8	1026	435	191
3	2343	ESP IN	AUTO	3.9	1052	466	198
4	2346	ESP IN	AUTO	3.9	1027	461	195
5	2349	ESP IN	AUTO	4	1008	468	199
	2351	NOTE - ESP INLET TRAVERSE FIRST 1/2					
1430	2354	NOTE - TIME 1430					
6	2355	ESP OUT	AUTO	5.2	937	452	110
7	2358	ESP OUT	AUTO	5.5	867	452	131

KVB ONLINE KILN MONITOR

175 CLEARBROOK RD. ELMSFORD, N.Y. 10523 (914) 347 3050

TEST SITE LONE STAR - CAPE GIR.
KILN NUMBER 2
TEST DESCRIPTION BASELINE
PRODUCTION RATE NOMINAL
TEST NUMBER LS-CG-1012-1
TEST DATE 5-11-1983

ID	TIME	PROBE	MODE	O2 (%)	CO (PPM)	NO(PPM@3%O2)	SO2(PPM@3%O2)
1	2301	ESP IN	AUTO	3.9	1032	442	202
2	2304	ESP IN	AUTO	3.9	1035	447	203
3	2307	ESP IN	AUTO	3.9	1043	430	205
4	2310	ESP IN	AUTO	3.9	1052	420	212
5	2313	ESP IN	AUTO	3.9	1070	430	203
6	2316	ESP IN	AUTO	4	1068	449	205
7	2319	ESP IN	AUTO	3.9	1025	440	208
14:00 8	2322	ESP IN	AUTO	3.9	1030	445	205
9	2325	ESP IN	AUTO	3.8	1039	454	195
10	2328	ESP IN	AUTO	3.9	1053	441	195
11	2331	ESP IN	AUTO	4.1	997	448	199
12	2334	ESP IN	AUTO	4	1010	436	197

KVB ONLINE KILN MONITOR

175 CLEARBROOK RD. ELMSFORD, N.Y. 10523 (914) 347 3050

TEST SITE LONE STAR - CAPE GIR.
KILN NUMBER 2
TEST DESCRIPTION BASELINE
PRODUCTION RATE NOMINAL
TEST NUMBER LS-CG-1012-1
TEST DATE 5-12-1983

ID	TIME	PROBE	MODE	O2 (%)	CO (PPM)	NO(PPM@3%O2)	SO2(PPM@3%O2)
1	0035	ESP IN	AUTO	3.8	1113	414	231
2	0038	ESP IN	AUTO	6.8	802	7	55
3	0041	ESP IN	AUTO	19.5	0	751	0
4	0044	ESP IN	AUTO	4.7	1045	478	0
5	0047	ESP IN	AUTO	4.1	1033	461	0
6	0050	ESP IN	AUTO	3.9	1037	453	0
15:30 7	0053	ESP IN	AUTO	3.9	1060	473	0
8	0056	ESP IN	AUTO	3.9	1129	439	6
9	0059	ESP IN	AUTO	3.9	1166	444	12
10	0102	ESP IN	AUTO	3.8	1149	428	12
11	0105	ESP IN	AUTO	3.9	1046	439	8
12	0108	ESP IN	AUTO	3.8	1067	445	0

PROBE IN 2ND PORT FILTER REMOVED

KVB ONLINE KILN MONITOR

175 CLEARBROOK RD. ELMSFORD, N.Y. 10523 (914) 347 3050

TEST SITE LONE STAR - CAPE GIR.
KILN NUMBER 2
TEST DESCRIPTION BASELINE
PRODUCTION RATE NOMINAL
TEST NUMBER LS-CG-1012-1
TEST DATE 5-12-1983

ID	TIME	PROBE	MODE	O2 (%)	CO (PPM)	NO(PPM@3%O2)	SO2(PPM@3%O2)
1	0001	ESP OUT	AUTO	5.5	927	448	135
2	0004	ESP OUT	AUTO	5.5	936	470	140
3	0007	ESP OUT	AUTO	5.6	906	452	138
4	0010	ESP OUT	AUTO	5.5	881	462	129
5	0013	ESP OUT	AUTO	5.6	904	459	135
6	0016	ESP OUT	AUTO	5.5	865	468	133
7	0019	ESP OUT	AUTO	5.5	883	452	129
8	0022	ESP OUT	AUTO	5.5	938	447	135
15:00 9	0025	ESP OUT	AUTO	5.5	915	448	135
	0027	NOTE - TIME 1503					
	0029	NOTE - ESP INLET TRAV & PROBE SWITCH					
10	0032	ESP IN	AUTO	3.9	1159	412	252

KVB ONLINE KILN MONITOR

175 CLEARBROOK RD. ELMSFORD, N.Y. 10523 (914) 347 3050

TEST SITE: LONE STAR - CAPE GIR.
KILN NUMBER: 2
TEST DESCRIPTION: BASELINE
PRODUCTION RATE: NOMINAL
TEST NUMBER: LS-CG-1012-1
TEST DATE: 5-12-1983

ID	TIME	PROBE	MODE	O2 (%)	CO (PPM)	NOX(PPM@3%O2)	SO2(PPM@3%O2)
	0244	NOTE - TIME					
	0244	NOTE - TIME 1720					
1	0248	ESP IN A1	MANUAL	4.8	988	396	71
2	0250	ESP IN A2	MANUAL	4.3	1256	397	84
A9 17:30	0251	NOTE - POINT A1 WITH PROBE 6" INTO DUCT					
	0252	NOTE - TRAVERSE DISTANCE 2.0' (A1-A2 ETC)					
3	0254	ESP IN A3	MANUAL	3.9	1231	391	141
4	0257	ESP IN A4	MANUAL	3.9	1190	395	289
5	0300	ESP IN A5	MANUAL	4	1080	407	261
6	0304	ESP IN A6	MANUAL	3.9	1028	426	194
	0307	NOTE - AVG ID'S # 1,2,3,4,5,6		4.1	1129	402	173

10/12

KVB ONLINE KILN MONITOR

175 CLEARBROOK RD. ELMSFORD, N.Y. 10523 (914) 347 3050

TEST SITE: LONE STAR - CAPE GIR.
KILN NUMBER: 2
TEST DESCRIPTION: BASELINE
PRODUCTION RATE: NOMINAL
TEST NUMBER: LS-CG-1012-1
TEST DATE: 5-12-1983

ID	TIME	PROBE	MODE	O2 (%)	CO (PPM)	NOX(PPM@3%O2)	SO2(PPM@3%O2)
1	0111	ESP IN	AUTO	3.9	1102	469	0
2	0114	ESP IN	AUTO	3.9	1152	474	0
3	0117	ESP IN	AUTO	3.8	1073	490	0
4	0120	ESP IN	AUTO	3.8	1044	486	0
16:00 5	0123	ESP IN	AUTO	3.8	1075	469	0
6	0126	ESP IN	AUTO	3.9	980	490	0
	0127	NOTE - SO2 SPAN					
	0139	NOTE - SO2 CAL (298) & ZERO					
7	0142	ESP IN	AUTO	19.2	1	145	4
16:30 8 17:00	0230	ESP IN	AUTO	3.6	1086	489	79
9	0231	ESP IN	AUTO	3.6	1086	492	80
	0243	NOTE - ESP IN GASEOUS TRAVERSE					

KVB ONLINE KILN MONITOR

175 CLEARBROOK RD. ELMSFORD, N.Y. 10523 (914) 347 3050

TEST SITE: LONE STAR - CAPE GIR.
KILN NUMBER: 2
TEST DESCRIPTION: BASELINE
PRODUCTION RATE: NOMINAL
TEST NUMBER: LS-CG-1012-1
TEST DATE: 5-12-1983

ID	TIME	PROBE	MODE	O2 (%)	CO (PPM)	NO(PPM@3%O2)	SO2(PPM@3%O2)
1	0343	ESP IN	AUTO	3.9	991	484	142
2	0346	ESP IN	AUTO	4.1	941	486	146
3	0349	ESP IN	AUTO	4	997	484	143
4	0352	ESP IN	AUTO	3.9	945	489	136
18.30							
5	0355	ESP IN	AUTO	4.1	881	486	125
6	0358	ESP IN	AUTO	4.1	917	480	126
7	0401	ESP IN	AUTO	4	972	484	128
8	0404	ESP IN	AUTO	4	931	475	127
	0406	NOTE - AVG ID'S # 1,2,3,4,5,6,7,8		4	947	484	134

A10

KVB ONLINE KILN MONITOR

175 CLEARBROOK RD. ELMSFORD, N.Y. 10523 (914) 347 3050

TEST SITE: LONE STAR - CAPE GIR.
KILN NUMBER: 2
TEST DESCRIPTION: BASELINE
PRODUCTION RATE: NOMINAL
TEST NUMBER: LS-CG-1012-1
TEST DATE: 5-12-1983

ID	TIME	PROBE	MODE	O2 (%)	CO (PPM)	NO(PPM@3%O2)	SO2(PPM@3%O2)
	0309	NOTE - POINT # IS REFERENCE (PRIOR DATA)					
1	0312	ESP IN A2	MANUAL	4	1041	450	52
	0312	NOTE - TIME 1749					
2	0314	ESP IN, A4	MANUAL	4.1	946	464	144
3	0319	ESP OUT	AUTO	5.7	877	467	113
18.00							
4	0322	ESP OUT	AUTO	5.4	935	450	112
5	0325	ESP OUT	AUTO	5.6	877	474	114
6	0328	ESP OUT	AUTO	5.6	866	471	115
7	0331	ESP OUT	AUTO	5.7	911	475	119
8	0334	ESP OUT	AUTO	5.6	881	473	114
	0337	NOTE - BYPASS TO BE TURNED ON AT 1900					
	0340	ESP IN	AUTO	4.1	953	501	122

KVB ONLINE KILN MONITOR

175 CLEARBROOK RD. ELMSFORD, N.Y. 10523 (914) 347 3050

TEST SITE LONE STAR - CAPE GIR.
KILN NUMBER 2
TEST DESCRIPTION BAGHOUSE IN/OUT
PRODUCTION RATE NOMINAL
TEST NUMBER LS-CG-1012-1
TEST DATE 5-12-1983

ID	TIME	PROBE	MODE	O2 (%)	CO (PPM)	NO(PPM@3%O2)	SO2(PPM@3%O2)
1	0455	BH OUT	MANUAL	18.3	0	838	0
2	0456	BYPAS OUT	AUTO	18.3	0	832	0
3	0506	BYPAS OUT	AUTO	17.9	0	962	166
4	0516	BYPAS OUT	AUTO	18.2	0	815	200
5	0526	BYPAS OUT	AUTO	18.8	0	566	292
6	0536	BYPAS OUT	AUTO	18.5	0	703	233
7	0546	BYPAS OUT	AUTO	18.6	0	700	275
8	0556	BYPAS OUT	AUTO	18.7	0	697	244
9	0606	BYPAS OUT	AUTO	18.6	0	769	179
10	0616	BYPAS OUT	AUTO	18.6	0	761	165
11	0626	BYPAS OUT	AUTO	18.6	3	741	182
12	0636	BYPAS OUT	AUTO	18.6	0	844	159

A11

KVB ONLINE KILN MONITOR

175 CLEARBROOK RD. ELMSFORD, N.Y. 10523 (914) 347 3050

TEST SITE LONE STAR - CAPE GIR.
KILN NUMBER 2
TEST DESCRIPTION BASELINE
PRODUCTION RATE NOMINAL
TEST NUMBER LS-CG-1012-1
TEST DATE 5-12-1983

ID	TIME	PROBE	MODE	O2 (%)	CO (PPM)	NO(PPM@3%O2)	SO2(PPM@3%O2)
1	0410	ESP OUT	AUTO	5.6	842	497	114
2	0413	ESP OUT	AUTO	5.6	845	487	118

0414 NOTE - POST TEST CAL @1655

0417 NOTE - IGNORE ABOVE TIME- ACTUAL TIME 1855

0449 NOTE - BAGHOUSE OUTLET MONITORING

0449 NOTE - TIME 1925

KVB ONLINE KILN MONITOR

175 CLEARBROOK RD. ELMSFORD, N.Y. 10523 (914) 347 3050

TEST SITE: LONE STAR - CAPE GIR.
KILN NUMBER: 2
TEST DESCRIPTION: BAGHOUSE IN/OUT
PRODUCTION RATE: NOMINAL
TEST NUMBER: LS-CG-1012-1
TEST DATE: 5-12-1983

ID	TIME	PROBE	MODE	O2 (%)	CO (PPM)	NO(PPM@3%O2)	SO2(PPM@3%O2)
1	0846	BYPAS OUT	AUTO	18.5	0	587	266
23:30							
2	0856	BYPAS OUT	AUTO	18.5	0	603	186
3	0906	BYPAS OUT	AUTO	18.5	0	634	159
4	0916	BYPAS OUT	AUTO	18.5	0	658	180
5	0926	BYPAS OUT	AUTO	18.5	0	608	183
6	0936	BYPAS OUT	AUTO	18.5	0	601	228
7	0946	BYPAS OUT	AUTO	18.6	0	629	216
00:00							
8	0956	BYPAS OUT	AUTO	18.6	0	642	211
9	1006	BYPAS OUT	AUTO	18.6	0	649	206
10	1016	BYPAS OUT	AUTO	18.6	0	530	175
01:00							
11	1026	BYPAS OUT	AUTO	18.6	0	603	193
12	1036	BYPAS OUT	AUTO	18.4	0	768	182

A12

KVB ONLINE KILN MONITOR

175 CLEARBROOK RD. ELMSFORD, N.Y. 10523 (914) 347 3050

TEST SITE: LONE STAR - CAPE GIR.
KILN NUMBER: 2
TEST DESCRIPTION: BAGHOUSE IN/OUT
PRODUCTION RATE: NOMINAL
TEST NUMBER: LS-CG-1012-1
TEST DATE: 5-12-1983

ID	TIME	PROBE	MODE	O2 (%)	CO (PPM)	NO(PPM@3%O2)	SO2(PPM@3%O2)
1	0646	BYPAS OUT	AUTO	18.5	0	988	162
21:30							
2	0656	BYPAS OUT	AUTO	18.5	0	913	192
3	0706	BYPAS OUT	AUTO	18.5	0	811	191
4	0716	BYPAS OUT	AUTO	18.5	0	762	212
22:00							
5	0726	BYPAS OUT	AUTO	18.5	0	753	218
6	0736	BYPAS OUT	AUTO	18.6	0	744	238
7	0746	BYPAS OUT	AUTO	18.6	0	700	205
22:30							
8	0756	BYPAS OUT	AUTO	18.6	0	599	189
9	0806	BYPAS OUT	AUTO	18.6	0	594	231
10	0816	BYPAS OUT	AUTO	18.6	0	601	223
23:00							
11	0826	BYPAS OUT	AUTO	18.6	0	593	221
12	0836	BYPAS OUT	AUTO	18.6	0	642	253

KVB ONLINE KILN MONITOR

175 CLEARBROOK RD. ELMSFORD, N.Y. 10523 (914) 347 3050

TEST SITE: LONE STAR - CAPE GIR.
KILN NUMBER: 2
TEST DESCRIPTION: BAGHOUSE IN/OUT
PRODUCTION RATE: NOMINAL
TEST NUMBER: LS-CG-1012-1
TEST DATE: 5-12-1983

ID	TIME	PROBE	MODE	O2 (%)	CO (PPM)	NO(PPM@3%O2)	SO2(PPM@3%O2)
1	1246	BYPAS OUT	AUTO	18.5	0	1293	166
	0330						
2	1256	BYPAS OUT	AUTO	18.8	0	1590	174
3	1306	BYPAS OUT	AUTO	18.9	0	1407	189
4	1316	BYPAS OUT	AUTO	18.7	0	1199	185
	0400						
5	1326	BYPAS OUT	AUTO	18.5	0	1389	173
6	1336	BYPAS OUT	AUTO	18.8	0	1194	283
7	1346	BYPAS OUT	AUTO	18.7	0	1106	208
	0430						
8	1356	BYPAS OUT	AUTO	18.8	0	879	224
9	1406	BYPAS OUT	AUTO	18.4	0	1132	160
10	1416	BYPAS OUT	AUTO	18.8	0	1184	197
	0500						
11	1426	BYPAS OUT	AUTO	18.8	0	1091	203
12	1436	BYPAS OUT	AUTO	18.6	0	912	203

A13

KVB ONLINE KILN MONITOR

175 CLEARBROOK RD. ELMSFORD, N.Y. 10523 (914) 347 3050

TEST SITE: LONE STAR - CAPE GIR.
KILN NUMBER: 2
TEST DESCRIPTION: BAGHOUSE IN/OUT
PRODUCTION RATE: NOMINAL
TEST NUMBER: LS-CG-1012-1
TEST DATE: 5-12-1983

ID	TIME	PROBE	MODE	O2 (%)	CO (PPM)	NO(PPM@3%O2)	SO2(PPM@3%O2)
1	1046	BYPAS OUT	AUTO	18.4	0	742	193
	0130						
2	1056	BYPAS OUT	AUTO	18.3	0	639	183
3	1106	BYPAS OUT	AUTO	18.3	0	530	157
4	1116	BYPAS OUT	AUTO	18.4	0	492	173
	0200						
5	1126	BYPAS OUT	AUTO	18.6	0	422	175
6	1136	BYPAS OUT	AUTO	18.6	0	493	191
7	1146	BYPAS OUT	AUTO	18.6	0	781	214
	0230						
8	1156	BYPAS OUT	AUTO	18.5	0	1049	175
9	1206	BYPAS OUT	AUTO	18.5	0	1443	161
10	1216	BYPAS OUT	AUTO	18.5	0	1656	152
	0300						
11	1226	BYPAS OUT	AUTO	18.5	0	1460	151
12	1236	BYPAS OUT	AUTO	18.5	0	1552	156

KVB ONLINE KILN MONITOR

175 CLEARBROOK RD. ELMSFORD, N.Y. 10523 (914) 347 3050

1/10

TEST SITE LONE STAR - CAPE GIR.
KILN NUMBER 2
TEST DESCRIPTION BAGHOUSE IN/OUT
PRODUCTION RATE NOMINAL
TEST NUMBER LS-CG-1013-1
TEST DATE 5-12-1983 10-13-1983

ID	TIME	PROBE	MODE	O2 (%)	CO (PPM)	NOX(PPM@3%O2)	SO2(PPM@3%O2)
1	8:00 1726	ZERO	MANUAL	.3	0	0	-6
	1727	NOTE - DATE 10/13					
2	1732	CAL	MANUAL	3.1	534	390	282
	1735	POST CAL	MANUAL	3.1	697	409	301
	8:30 1759	NOTE - LK CK 24.0 IN HG 0.1 SCFH					
4	1803	BYPAS OUT	AUTO	19.1	0	1050	325
5	1807	ESP OUT	AUTO	9	223	591	85
6	1810	ESP OUT	AUTO	8.6	240	550	80
7	1813	ESP OUT	AUTO	8.3	242	577	83
8	1816	ESP OUT	AUTO	8.3	233	602	95
9	1819	ESP OUT	AUTO	8.3	238	602	97
10	9:00 1822	ESP OUT	AUTO	8.1	242	566	94

A14

KVB ONLINE KILN MONITOR

175 CLEARBROOK RD. ELMSFORD, N.Y. 10523 (914) 347 3050

TEST SITE LONE STAR - CAPE GIR.
KILN NUMBER 2
TEST DESCRIPTION BAGHOUSE IN/OUT
PRODUCTION RATE NOMINAL
TEST NUMBER LS-CG-1013-1
TEST DATE 5-12-1983

ID	TIME	PROBE	MODE	O2 (%)	CO (PPM)	NOX(PPM@3%O2)	SO2(PPM@3%O2)
1	1825	ESP OUT	AUTO	8.2	239	618	98
2	1828	ESP OUT	AUTO	8.3	254	609	103
3	1831	ESP OUT	AUTO	8.2	253	635	90
	1834	ESP OUT	AUTO	8.2	270	596	97
	1835	NOTE - KILN AT REDUCED LOAD (178 VS 220)					
	1835	NOTE - UPSET DUE TO "WET COAL" AT MILL					
	1836	NOTE - BYPASS SYSTEM NOT UP TO FULL SETTING					
5	1839	ESP IN	AUTO	5.4	377	574	79
6	1842	ESP IN	AUTO	5.2	395	564	116
7	1845	ESP IN	AUTO	4.9	392	595	131
8	9:30 1848	ESP IN	AUTO	5	410	573	134
9	1851	ESP IN	AUTO	4.9	430	536	147

KVB ONLINE KILN MONITOR

175 CLEARBROOK RD. ELMSFORD, N.Y. 10523 (914) 347 3050

TEST SITE LONE STAR - CAPE GIR.
KILN NUMBER 2
TEST DESCRIPTION BAGHOUSE IN/OUT
PRODUCTION RATE NOMINAL
TEST NUMBER LS-CG-1013-1
TEST DATE 5-12-1983

ID	TIME	PROBE	MODE	O2 (%)	CO (PPM)	NO(PPM@3%O2)	SO2(PPM@3%O2)
1	1932	ESP OUT	AUTO	7.2	423	523	110
2	1935	ESP OUT	AUTO	7.1	469	489	116
3	1938	ESP OUT	AUTO	7.3	441	495	115
	1941	ESP OUT	AUTO	7.3	465	482	126
5	1944	ESP OUT	AUTO	7	461	476	125
	10:00						
6	1947	ESP OUT	AUTO	7	464	507	123
7	1950	ESP OUT	AUTO	7.1	467	467	131
8	1953	ESP OUT	AUTO	6.9	655	452	137
9	1956	ESP OUT	AUTO	7.1	451	479	129
	11:00						
10	2028	BYPAS OUT	MANUAL	18.3	30	766	1
	11:1						
11	2030	BYPAS OUT	AUTO	18.3	30	759	2
12	2031	BYPAS OUT	AUTO	18.3	30	748	2

KVB ONLINE KILN MONITOR

175 CLEARBROOK RD. ELMSFORD, N.Y. 10523 (914) 347 3050

TEST SITE LONE STAR - CAPE GIR.
KILN NUMBER 2
TEST DESCRIPTION BAGHOUSE IN/OUT
PRODUCTION RATE NOMINAL
TEST NUMBER LS-CG-1013-1
TEST DATE 5-12-1983

ID	TIME	PROBE	MODE	O2 (%)	CO (PPM)	NO(PPM@3%O2)	SO2(PPM@3%O2)
	1853	NOTE - TIME 0937					
1	1859	BYPAS OUT	AUTO	18.4	23	764	154
2	1902	BYPAS OUT	AUTO	18.5	19	845	152
3	1905	BYPAS OUT	AUTO	18.5	20	810	157
4	1908	BYPAS OUT	AUTO	18.6	21	834	159
5	1911	ESP OUT	AUTO	8.4	388	606	98
6	1914	ESP OUT	AUTO	7.4	435	546	109
	10:00						
7	1917	ESP OUT	AUTO	7.2	473	529	110
8	1920	ESP OUT	AUTO	7.3	471	541	117
9	1923	ESP OUT	AUTO	7	520	479	123
10	1926	ESP OUT	AUTO	6.9	522	493	119
11	1929	ESP OUT	AUTO	7.1	419	579	106

KVB ONLINE KILN MONITOR

175 CLEARBROOK RD. ELMSFORD, N.Y. 10523 (914) 347 3050

TEST SITE LONE STAR - CAPE GIR.
KILN NUMBER 2
TEST DESCRIPTION BAGHOUSE IN/OUT
PRODUCTION RATE NOMINAL
TEST NUMBER LS-CG-1013-1
TEST DATE 5-12-1983

ID	TIME	PROBE	MODE	O2 (%)	CO (PPM)	NO(PPM@3%O2)	SO2(PPM@3%O2)
	2134	NOTE - SO2 CAL					
1	2138	PRECAL	MANUAL	3.2	743	430	299
2	2140	PRECAL Z	MANUAL	.3	21	2	-5
	2142	NOTE - SO2 ZERO 323 ON DIAL					
	2145	NOTE - NO CAL 867 ON DIAL					
	2145	NOTE - SO2 SPAN 668					
	11:30 2146	POSTCAL	MANUAL	3	705	408	301
4	2151	BYPAS OUT	AUTO	18.3	105	250	0
5	2154	BYPAS OUT	AUTO	18.3	114	376	18
6	2157	BYPAS OUT	AUTO	18.2	102	291	6
7	2200	BYPAS OUT	AUTO	18.2	108	284	10
8	2203	BYPAS OUT	AUTO	18.3	177	271	20

A16

KVB ONLINE KILN MONITOR

175 CLEARBROOK RD. ELMSFORD, N.Y. 10523 (914) 347 3050

TEST SITE LONE STAR - CAPE GIR.
KILN NUMBER 2
TEST DESCRIPTION BAGHOUSE IN/OUT
PRODUCTION RATE NOMINAL
TEST NUMBER LS-CG-1013-1
TEST DATE 5-12-1983

ID	TIME	PROBE	MODE	O2 (%)	CO (PPM)	NO(PPM@3%O2)	SO2(PPM@3%O2)
1	2032	BYPAS OUT	AUTO	18.3	29	750	3
	2033	NOTE - PROBE AT INLET W/O LK CK					
2	2036	BYPAS IN	AUTO	18.3	25	713	3
	2037	NOTE - SO2 CAL IN PROGRESS					
3	2039	BYPAS IN	AUTO	18.2	29	661	23
	2044	NOTE - SO2 CAL COMPLETE					
	2049	NOTE - LK CK BYPAS IN OK AT 24.0 IN HG					
4	2050	BYPAS IN	AUTO	18.2	26	669	43
5	2053	BYPAS IN	AUTO	18.3	27	698	10
6	2056	BYPAS IN	AUTO	18.1	30	597	1
7	2059	BYPAS IN	AUTO	18.1	31	625	10
8	12:00 2133	BYPAS IN	MANUAL	18.1	33	558	-8

KVB ONLINE KILN MONITOR

175 CLEARBROOK RD. ELMSFORD, N.Y. 10523 (914) 347 3050

TEST SITE: LONE STAR - CAPE GIR.
KILN NUMBER: 2
TEST DESCRIPTION: BAGHOUSE IN/OUT
PRODUCTION RATE: NOMINAL
TEST NUMBER: LS-CG-1013-1
TEST DATE: 5-12-1983

ID	TIME	PROBE	MODE	O2 (%)	CO (PPM)	NO(PPM@3%O2)	SO2(PPM@3%O2)
1	2231	BYPAS IN	AUTO	18.1	35	370	105
2	2234	BYPAS IN	AUTO	18.1	45	408	46
	2235	NOTE - AMBIENT CAL					
	2237	AMBIENT	MANUAL	19.3	0	24	75
4	2241	CAL 10%O2	MANUAL	9.7	2	4	493
	1330 2246	NOTE - O2 CELL CONTACTS CLEANED					
5	2255	BYPAS IN	AUTO	18.7	313	230	39
6	2258	BYPAS IN	AUTO	18.7	322	176	13
7	2301	BYPAS IN	AUTO	18.7	287	178	20
8	2304	BYPAS IN	AUTO	18.6	297	159	12
9	2307	BYPAS IN	AUTO	18.6	526	148	13
10	2310	BYPAS IN	AUTO	18.7	340	105	4

A17

KVB ONLINE KILN MONITOR

175 CLEARBROOK RD. ELMSFORD, N.Y. 10523 (914) 347 3050

TEST SITE: LONE STAR - CAPE GIR.
KILN NUMBER: 2
TEST DESCRIPTION: BAGHOUSE IN/OUT
PRODUCTION RATE: NOMINAL
TEST NUMBER: LS-CG-1013-1
TEST DATE: 5-12-1983

ID	TIME	PROBE	MODE	O2 (%)	CO (PPM)	NO(PPM@3%O2)	SO2(PPM@3%O2)
1	2206	BYPAS OUT	AUTO	18.2	95	225	15
2	2209	BYPAS OUT	AUTO	18.2	76	315	11
3	2212	BYPAS OUT	AUTO	18.2	30	357	9
	2215	BYPAS OUT	AUTO	18.2	315	186	9
	1300						
5	2218	BYPAS OUT	AUTO	18.3	66	252	49
	2220	NOTE - SO2 INSTRUMENT INTERNAL TEMP 82 C					
	2221	NOTE - SO2 & NO HOT BOX TEMP 114 C					
6	2221	BYPAS IN	AUTO	12	356	1205	103
7	2222	BYPAS IN	AUTO	6	584	539	188
	1306						
8	2223	BYPAS IN	AUTO	5.4	606	486	196
9	2224	BYPAS IN	AUTO	4.5	621	441	224
10	2228	BYPAS IN	AUTO	18.1	26	522	104

KVB ONLINE KILN MONITOR

175 CLEARBROOK RD. ELMSFORD, N.Y. 10523 (914) 347 3050

TEST SITE: LONE STAR - CAPE GIR.
KILN NUMBER: 2
TEST DESCRIPTION: BAGHOUSE IN/OUT
PRODUCTION RATE: NOMINAL
TEST NUMBER: LS-CG-1013-1
TEST DATE: 5-12-1983

ID	TIME	PROBE	MODE	O2 (%)	CO (PPM)	NO(PPM@3%O2)	SO2(PPM@3%O2)
1	2313	BYPAS IN	AUTO	18.6	461	103	14
2	2316	BYPAS IN	AUTO	18.7	305	232	32
3	2319	BYPAS IN	AUTO	18.8	281	179	10
	2324	BYPAS OUT	AUTO	18.7	352	103	5
5	2327	BYPAS OUT	AUTO	18.8	345	123	6
6	2330	BYPAS OUT	AUTO	18.7	201	237	25
7	2333	BYPAS OUT	AUTO	18.9	267	198	24
8	2336	BYPAS OUT	AUTO	18.9	308	140	13
9	2339	BYPAS OUT	AUTO	18.8	284	223	36
10	2342	BYPAS OUT	AUTO	18.9	122	360	59
11	2345	BYPAS OUT	AUTO	18.9	114	279	8
12	2348	BYPAS OUT	AUTO	18.8	72	393	40

A18

KVB ONLINE KILN MONITOR

175 CLEARBROOK RD. ELMSFORD, N.Y. 10523 (914) 347 3050

TEST SITE: LONE STAR - CAPE GIR.
KILN NUMBER: 2
TEST DESCRIPTION: BAGHOUSE IN/OUT
PRODUCTION RATE: NOMINAL
TEST NUMBER: LS-CG-1013-1
TEST DATE: 5-12-1983

ID	TIME	PROBE	MODE	O2 (%)	CO (PPM)	NO(PPM@3%O2)	SO2(PPM@3%O2
1	2351	BYPAS OUT	AUTO	18.8	51	493	80
2	2354	BYPAS OUT	AUTO	19	104	313	99
3	2358	BYPAS IN	AUTO	18.8	71	322	87

KVB ONLINE KILN MONITOR

175 CLEARBROOK RD. ELMSFORD, N.Y. 10523 (914) 347 3050

TEST SITE: LONE STAR - CAPE GIR.
KILN NUMBER: 2
TEST DESCRIPTION: BAGHOUSE IN/OUT
PRODUCTION RATE: NOMINAL
TEST NUMBER: LS-CG-1013-1
TEST DATE: 5-13-1983

ID	TIME	PROBE	MODE	O2 (%)	CO (PPM)	NO(PPM@3%O2)	SO2(PPM@3%O2)
1	0001	BYPAS IN	AUTO	18.8	68	353	50
2	0004	BYPAS IN	AUTO	18.7	31	546	30
3	0007	BYPAS IN	AUTO	18.9	52	596	31
	0010	BYPAS IN	AUTO	18.8	47	426	47
5	0013	BYPAS IN	AUTO	18.6	25	609	46
6	1500 0016	BYPAS IN	AUTO	18.8	43	610	41
7	0019	BYPAS IN	AUTO	18.8	55	314	56
8	0022	BYPAS IN	AUTO	18.6	22	648	28
9	0025	BYPAS IN	AUTO	18.7	16	727	31
10	0028	BYPAS IN	AUTO	18.7	27	602	52
11	0031	BYPAS IN	AUTO	18.5	10	776	13
12	0034	BYPAS IN	AUTO	18.5	9	829	33

A19

KVB ONLINE KILN MONITOR

175 CLEARBROOK RD. ELMSFORD, N.Y. 10523 (914) 347 3050

TEST SITE: LONE STAR - CAPE GIR.
KILN NUMBER: 2
TEST DESCRIPTION: BAGHOUSE IN/OUT
PRODUCTION RATE: NOMINAL
TEST NUMBER: LS-CG-1013-1
TEST DATE: 5-13-1983

ID	TIME	PROBE	MODE	O2 (%)	CO (PPM)	NO(PPM@3%O2)	SO2(PPM@3%O2)
1	0037	BYPAS IN	AUTO	18.7	9	794	6
2	0040	BYPAS IN	AUTO	18.6	203	708	17
3	0043	BYPAS IN	AUTO	18.5	40	803	28
	1530 0046	BYPAS IN	AUTO	18.8	115	769	43
	0048	NOTE - SWITCH SAMPLES					
5	0049	BYPAS IN	AUTO	18.6	15	477	37
6	0052	BYPAS OUT	AUTO	18.6	254	862	37
7	0054	BYPAS OUT	AUTO	18.8	10	772	40
8	0056	BYPAS OUT	AUTO	18.6	10	943	41
9	0058	BYPAS OUT	AUTO	18.6	9	852	28
10	0102	BYPAS IN	AUTO	18.6	8	826	36
11	0104	BYPAS IN	AUTO	18.6	9	1009	29

KVB ONLINE KILN MONITOR

175 CLEARBROOK RD. ELMSFORD, N.Y. 10523 (914) 347 3050

TEST SITE: LONE STAR - CAPE GIR.
KILN NUMBER: 2
TEST DESCRIPTION: BAGHOUSE IN/OUT
PRODUCTION RATE: NOMINAL
TEST NUMBER: LS-CG-1013-1
TEST DATE: 5-13-1983

ID	TIME	PROBE	MODE	O2 (%)	CO (PPM)	NO(PPM@3%O2)	SO2(PPM@3%O2)
1	0106	BYPAS IN	AUTO	18.6	8	887	33
2	0108	BYPAS IN	AUTO	18.6	9	1032	30
3	0110	BYPAS IN	AUTO	18.6	7	870	29
	0112	BYPAS IN	AUTO	18.9	5	1004	39
5	0114	BYPAS IN	AUTO	18.7	8	981	2
	0116	BYPAS IN	AUTO	19	3	1109	11
7	0118	BYPAS IN	AUTO	18.8	2	894	0
8	0120	BYPAS IN	AUTO	19	5	874	13
9	0122	BYPAS IN	AUTO	18.7	10	983	18
10	0124	BYPAS IN	AUTO	18.9	7	885	0
11	0126	BYPAS IN	AUTO	18.5	9	1072	0
12	0128	BYPAS IN	AUTO	18.7	8	691	0

KVB ONLINE KILN MONITOR

175 CLEARBROOK RD. ELMSFORD, N.Y. 10523 (914) 347 3050

TEST SITE: LONE STAR - CAPE GIR.
KILN NUMBER: 2
TEST DESCRIPTION: BAGHOUSE IN/OUT
PRODUCTION RATE: NOMINAL
TEST NUMBER: LS-CG-1013-1
TEST DATE: 5-13-1983

ID	TIME	PROBE	MODE	O2 (%)	CO (PPM)	NO(PPM@3%O2)	SO2(PPM@3%O2)
1	0130	BYPAS IN	AUTO	18.8	9	964	0
2	0132	BYPAS IN	AUTO	18.8	9	700	0
3	0134	BYPAS IN	AUTO	18.7	11	1133	0
	0136	BYPAS IN	AUTO	18.7	10	859	13
5	0138	BYPAS IN	AUTO	19	9	912	37
6	0140	BYPAS IN	AUTO	18.9	8	863	13
7	0142	BYPAS IN	AUTO	19	3	1256	6
8	0144	BYPAS IN	AUTO	18.4	14	856	9
9	0146	BYPAS IN	AUTO	18.9	28	689	19
10	0148	BYPAS IN	AUTO	18.9	10	856	2
11	0150	BYPAS IN	AUTO	18.5	15	1612	0
12	0152	BYPAS IN	AUTO	18.5	14	96	35

KVB ONLINE KILN MONITOR

175 CLEARBROOK RD. ELMSFORD, N.Y. 10523 (914) 347 3050

TEST SITE LONE STAR - CAPE GIR.
KILN NUMBER 2
TEST DESCRIPTION BAGHOUSE IN/OUT
PRODUCTION RATE NOMINAL
TEST NUMBER LS-CG-1013-1
TEST DATE 5-13-1983

ID	TIME	PROBE	MODE	O2 (%)	CO (PPM)	NO(PPM@3%O2)	SO2(PPM@3%O2)
1	0229	KILN	AUTO	19.6	9	1281	6495
2	0231	KILN	AUTO	3.5	3396	13	2147
3	0233	KILN	AUTO	12.2	1610	328	4746
	0235	KILN	AUTO	8.6	2484	47	3396
5	0237	KILN	AUTO	3.5	3393	29	2141
	0241	ESP OUT	AUTO	7.7	475	246	174
7	0244	ESP OUT	AUTO	7.2	447	219	158
	17:30						
8	0247	KILN	AUTO	14.5	598	22	846
9	0249	KILN	AUTO	19.3	120	91	2709
10	0251	KILN	AUTO	17.2	198	359	1509
11	0253	KILN	AUTO	19.2	65	41	449
12	0255	KILN	AUTO	18.5	288	85	404

A21

KVB ONLINE KILN MONITOR

175 CLEARBROOK RD. ELMSFORD, N.Y. 10523 (914) 347 3050

TEST SITE LONE STAR - CAPE GIR.
KILN NUMBER 2
TEST DESCRIPTION BAGHOUSE IN/OUT
PRODUCTION RATE NOMINAL
TEST NUMBER LS-CG-1013-1
TEST DATE 5-13-1983

ID	TIME	PROBE	MODE	O2 (%)	CO (PPM)	NO(PPM@3%O2)	SO2(PPM@3%O2)
1	0154	BYPAS IN	AUTO	19.9	8	70	56
2	0156	BYPAS IN	AUTO	19.2	347	81	35
	0201	NOTE - BYPAS DOWN FOR 10 MIN AT 1640					
	0201	NOTE - HIGH TEMP TRIP					
	0206	NOTE - ZERO CAL					
3	0207	CAL VALS	MANUAL	3.3	680	408	300
	17:00						
4	0219	KILN	AUTO	.7	3145	68	461
5	0220	KILN	AUTO	.7	3267	64	461
6	0221	KILN	AUTO	.8	3275	17	462
7	0222	KILN	AUTO	.8	3265	7	462
8	0223	KILN	AUTO	5.3	1799	4	1745
9	0224	KILN	AUTO	10.2	577	7	4097

KVB ONLINE KILN MONITOR

175 CLEARBROOK RD. ELMSFORD, N.Y. 10523 (914) 347 3050

TEST SITE: LONE STAR - CAPE GIR.
KILN NUMBER: 2
TEST DESCRIPTION: BAGHOUSE IN/OUT
PRODUCTION RATE: NOMINAL
TEST NUMBER: LS-CG-1013-1
TEST DATE: 5-13-1983

ID	TIME	PROBE	MODE	O2 (%)	CO (PPM)	NO(PPM@3%O2)	SO2(PPM@3%O2)
	0319	NOTE - TIME 1800 HRS					
1	0323	ESP IN	AUTO	4.8	557	278	297
2	0326	ESP IN	AUTO	4.7	562	226	295
	0327		MANUAL	4.5	538	284	296
4	0329	BYPAS IN	AUTO	17.9	125	151	145
5	0331	BYPAS IN	AUTO	18.9	107	203	169
6	0333	BYPAS IN	AUTO	19	206	143	169
7	0335	BYPAS IN	AUTO	19.4	162	211	217
8	0337	BYPAS IN	AUTO	19	167	245	156
9	0339	BYPAS IN	AUTO	19.1	106	241	172
10	0341	BYPAS IN	AUTO	19.1	133	222	144
11	0343	BYPAS IN	AUTO	19.5	112	61	101

A22

KVB ONLINE KILN MONITOR

175 CLEARBROOK RD. ELMSFORD, N.Y. 10523 (914) 347 3050

TEST SITE: LONE STAR - CAPE GIR.
KILN NUMBER: 2
TEST DESCRIPTION: BAGHOUSE IN/OUT
PRODUCTION RATE: NOMINAL
TEST NUMBER: LS-CG-1013-1
TEST DATE: 5-13-1983

ID	TIME	PROBE	MODE	O2 (%)	CO (PPM)	NO(PPM@3%O2)	SO2(PPM@3%O2)
1	0257	KILN	AUTO	9.5	3293	222	3335
2	0259	KILN	AUTO	10.4	3004	103	3529
3	0301	KILN	AUTO	3.2	3392	143	2147
	0302	NOTE - GOOD DATA					
4	0303	KILN	AUTO	.4	3392	174	1819
5	0305	KILN	AUTO	.3	3390	116	1807
6	0307	KILN	AUTO	.3	3389	80	1807
7	0309	KILN	AUTO	.3	3417	52	1799
8	0311	KILN	AUTO	.5	3446	80	1827
9	0313	KILN	AUTO	1.5	3269	16	1787
	10:00 0318	NOTE - SWITTCH TO ESP IN					
10	0319	ESP IN	MANUAL	4.6	594	217	285

KVB ONLINE KILN MONITOR

175 CLEARBROOK RD. ELMSFORD, N.Y. 10523 (914) 347 3050

TEST SITE LONE STAR - CAPE GIR.
KILN NUMBER 2
TEST DESCRIPTION BH & KILN TRAVERSE
PRODUCTION RATE NOMINAL
TEST NUMBER LS-CG-1014-1
TEST DATE 5-13-1983

ID	TIME	PROBE	MODE	O2 (%)	CO (PPM)	NO(PPM@3%O2)	SO2(PPM@3%O2)
	1705	NOTE - ZRED CAL					
	1708	NOTE - SO2 ZERO 282					
1	1708	PRE ZERO	MANUAL	.1	0	3	0
	1712	NOTE - SO2 CAL 116 NO 891.5 CO 10					
2	1716	ZERO	MANUAL	.2	0	0	1
	1720	NOTE - NO 862 SO2 109 CO 1015					
3	1721	SPAN	MANUAL	3	700	410	1591
4	1724	PRE AMB	MANUAL	19.4	0	3	63
5	1727	POST AMB	MANUAL	20.9	0	12	50

KVB ONLINE KILN MONITOR

175 CLEARBROOK RD. ELMSFORD, N.Y. 10523 (914) 347 3050

TEST SITE LONE STAR - CAPE GIR.
KILN NUMBER 2
TEST DESCRIPTION BAGHOUSE IN/OUT
PRODUCTION RATE NOMINAL
TEST NUMBER LS-CG-1013-1
TEST DATE 5-13-1983

ID	TIME	PROBE	MODE	O2 (%)	CO (PPM)	NO(PPM@3%O2)	SO2(PPM@3%O2)
1	0345	BYPAS IN	AUTO	19.4	160	48	134
2	0347	POST Z	MANUAL	.5	1	2	15
3	0350	POST CAL	MANUAL	3.2	747	415	1622
	0351	NOTE - TIME 1835					
	0356	NOTE - SHUT DOWN 1840					

KVB ONLINE KILN MONITOR

175 CLEARBROOK RD. ELMSFORD, N.Y. 10523 (914) 347 3050

TEST SITE LONE STAR - CAPE GIR.
KILN NUMBER 2
TEST DESCRIPTION BH & KILN TRAVERSE
PRODUCTION RATE NOMINAL
TEST NUMBER LS-CG-1014-1
TEST DATE 5-13-1983

ID	TIME	PROBE	MODE	O2 (%)	CO (PPM)	NO(PPM@3%O2)	SO2(PPM@3%O2)
1	1812	BYPAS IN	AUTO	19.5	1	1830	113
2	1815	BYPAS IN	AUTO	19.5	3	1886	221
3	1818	BYPAS IN	AUTO	19.6	4	1857	52
4	1821	BYPAS IN	AUTO	19.7	1	1789	125
5	1824	BYPAS IN	AUTO	19.5	2	1825	88
6	1827	BYPAS IN	AUTO	19.6	0	1929	64
	1829	NOTE - KILN TRAVERSE 0913					
7	1843	AMB	MANUAL	21	0	46	184
	1845	NOTE - LK CK AT 24 IN HG ZERO FLOW					
8	1848	KILN INT	MANUAL	1.8	1095	1297	2920
	1854	NOTE - KILN FEED 224 TPH COAL 7.3 TPH					
9	1857	KILN INT	MANUAL	3.7	33	1359	2357

KVB ONLINE KILN MONITOR

175 CLEARBROOK RD. ELMSFORD, N.Y. 10523 (914) 347 3050

TEST SITE LONE STAR - CAPE GIR.
KILN NUMBER 2
TEST DESCRIPTION BH & KILN TRAVERSE
PRODUCTION RATE NOMINAL
TEST NUMBER LS-CG-1014-1
TEST DATE 5-13-1983

ID	TIME	PROBE	MODE	O2 (%)	CO (PPM)	NO(PPM@3%O2)	SO2(PPM@3%O2)
	1731	NOTE - O2 INSTRUMENT CAL ON AMB					
	1734	NOTE - SO2 ZERO 326					
1	1736	BYPAS IN	MANUAL	19.7	0	1999	30
	1737	NOTE - SWITCX TO BYPAS OUT					
2	1741	BYPAS OUT	MANUAL	19.8	0	1928	86
3	1745	ESP IN	MANUAL	4.9	476	643	248
4	1749	ESP OUT	MANUAL	7.9	367	655	169
5	1753	BYPAS IN	MANUAL	19.5	0	1626	81
6	1757	BYPAS OUT	MANUAL	19.7	0	1841	170
7	1800	ESP IN	MANUAL	4.9	527	619	282
8	1803	ESP OUT	MANUAL	7.8	400	643	178
9	1809	BYPAS IN	AUTO	19.5	2	1828	116

KVB ONLINE KILN MONITOR

175 CLEARBROOK RD. ELMSFORD, N.Y. 10523 (914) 347 3050

TEST SITE: LONE STAR - CAPE GIR.
KILN NUMBER: 2
TEST DESCRIPTION: BH & KILN TRAVERSE
PRODUCTION RATE: NOMINAL
TEST NUMBER: LS-CG-1014-1
TEST DATE: 5-13-1983

ID	TIME	PROBE	MODE	O2 (%)	CO (PPM)	NO(PPM@3%O2)	SO2(PPM@3%O2)
	1927	NOTE - BH INLET TEMP 498 F					
	1928	NOTE - LOW CO CONCS					
	1929	NOTE - PROBE VAC 12 IN HG					
	1929	KILN INT	AUTO	3.3	2	1294	3160
	1931	NOTE - BY PAS IN VAC 8.5 IN HG					
2	1934	BYPAS IN	AUTO	19.7	3	1495	51
	1937	BYPAS OUT	AUTO	19.9	4	1771	8
	1940	BYPAS OUT	AUTO	20	5	1805	0
5	1943	BYPAS OUT	AUTO	20	6	1919	68
6	1946	BYPAS OUT	AUTO	20.1	7	1976	0
7	1949	BYPAS OUT	AUTO	20	2	2034	0
8	10:50 1952	BYPAS OUT	AUTO	20.1	3	2004	40

A25

KVB ONLINE KILN MONITOR

175 CLEARBROOK RD. ELMSFORD, N.Y. 10523 (914) 347 3050

TEST SITE: LONE STAR - CAPE GIR.
KILN NUMBER: 2
TEST DESCRIPTION: BH & KILN TRAVERSE
PRODUCTION RATE: NOMINAL
TEST NUMBER: LS-CG-1014-1
TEST DATE: 5-13-1983

ID	TIME	PROBE	MODE	O2 (%)	CO (PPM)	NO(PPM@3%O2)	SO2(PPM@3%O2)
1	1902	BYPAS IN	AUTO	19.4	2	1423	50
2	1905	BYPAS IN	AUTO	19.5	1	1561	95
3	1908	BYPAS IN	AUTO	19.7	0	1578	3
	1912	NOTE - SINTERED FILTERS USED AT BH IN & OUT					
4	1913	BYPAS OUT	AUTO	19.8	1	1623	3
	1915	NOTE - SO2 RANGE 0-3000					
5	1916	BYPAS OUT	AUTO	19.9	3	1802	32
6	1919	EBP IN	AUTO	4.9	562	561	282
7	10:00 1923	KILN INT	AUTO	3.5	13	1385	2060
	1924	NOTE - SO2 INCREASING					
8	1925	KILN INT	AUTO	3.6	10	1348	3224
9	1927	KILN INT	AUTO	3	34	1322	3118

KVB ONLINE KILN MONITOR

175 CLEARBROOK RD. ELMSFORD, N.Y. 10523 (914) 347 3050

TEST SITE LONE STAR - CAPE GIR.
KILN NUMBER 2
TEST DESCRIPTION BH & KILN TRAVERSE
PRODUCTION RATE NOMINAL
TEST NUMBER LS-CG-1014-1
TEST DATE 5-13-1983

ID	TIME	PROBE	MODE	O2 (%)	CO (PPM)	NO(PPM@3%O2)	SO2(PPM@3%O2)
1	2035	BY PAS IN	AUTO	19.8	12	1816	96
2	2038	BY PAS IN	AUTO	19.7	15	1667	113
3	2053	KILN WEST	AUTO	10	265	1540	0
11:30							
	2056	KILN WEST	AUTO	9.1	344	1489	0
5	2059	KILN WEST	AUTO	9.6	227	172	0
6	2102	KILN WEBT	AUTO	20.8	0	208	48
7	2105	POST ZERO	MANUAL	.7	0	7	1
8	2107	POST CAL	MANUAL	3.3	705	438	1622

A26

KVB ONLINE KILN MONITOR

175 CLEARBROOK RD. ELMSFORD, N.Y. 10523 (914) 347 3050

TEST SITE LONE STAR - CAPE GIR.
KILN NUMBER 2
TEST DESCRIPTION BH & KILN TRAVERSE
PRODUCTION RATE NOMINAL
TEST NUMBER LS-CG-1014-1
TEST DATE 5-13-1983

ID	TIME	PROBE	MODE	O2 (%)	CO (PPM)	NO(PPM@3%O2)	SO2(PPM@3%O2)
	1955	NOTE - INSTRUMENT ZERO CAL					
	1956	NOTE - SO2 -5 PPM					
1	2001	KILN REAR	AUTO	1.1	1374	1021	27
2	2005	BYPAS IN	AUTO	19.4	7	1481	97
3	2008	BYPAS IN	AUTO	19.5	6	1482	89
4	2011	BYPAS IN	AUTO	19.5	8	1636	167
5	2014	BYPAS IN	AUTO	19.5	4	1614	81
6	2017	BYPAS IN	AUTO	19.5	3	1686	182
7	2020	BYPAS IN	AUTO	19.6	10	1657	151
	2021	NOTE - LK CK 25 IN HG 0 FLOW					
11:00							
8	2028	BYPAS OUT	AUTO	19.6	20	1614	151
9	2032	BY PAS IN	AUTO	19.7	12	1746	142